ORNL MASTER COPY

OAK RIDGE NATIONAL LABORATORY

operated by

UNION CARBIDE CORPORATION

for the

U.S. ATOMIC ENERGY COMMISSION

UNION CARBIDE

ORNL - TM - 610

COPY NO. - 4

DATE - July 8, 1963

STATUS OF FUEL CYCLE IRRADIATION PROGRAM AT OAK RIDGE NATIONAL LABORATORY

S. A. Rabin

ABSTRACT

This memorandum outlines the status of the ORNL Fuel Cycle Irradiation Program. Brief discussions of the current program and related work, proposed postirradiation examination of capsules presently in-pile, and recommendations for future work are presented.

NOTICE

This document contains information of a preliminary nature and was prepared primarily for internal use at the Oak Ridge National Laboratory. It is subject to revision or correction and therefore does not represent a final report. The information is not to be abstracted, reprinted or otherwise given public dissemination without the approval of the ORNL patent branch, Legal and Information Control Department.

LEGAL NOTICE

This report was prepared as an account of Government sponsored work. Neither the United States, nor the Commission, nor any person acting on behalf of the Commission:

A. Makes any warranty or representation, expressed or implied, with respect to the accuracy, completeness, or usefulness of the information contained in this report, or that the use of any information, apparatus, method, or process disclosed in this report may not infringe privately owned rights; or

B. Assumes any liabilities with respect to the use of, or for damages resulting from the use of any information, apparatus, method, or process disclosed in this report.

As used in the above, "person acting on behalf of the Commission" includes any employee or contractor of the Commission, or employee of such contractor, to the extent that such employee or contractor of the Commission, or employee of such contractor prepares, disseminates, or provides access to, any information pursuant to his employment or contract with the Commission, or his employment with such contractor.

I. INTRODUCTION

The Oak Ridge National Laboratory is currently engaged in a comprehensive study of the technology of recycling thorium-U^{233} fuel materials for use in heterogeneous reactors. It is well known that fuel systems utilizing U^{233} are attractive because of their breeding potential. The disadvantage of Th-U^{233} fuels is the fact that both materials are radioactive after reactor discharge, requiring shielding and remote handling for reprocessing and refabrication.

One of the aims of this project is to develop suitable techniques for reprocessing and remotely fabricating fuels containing U^{233} and to then appraise these materials as fuels for application in power reactors. As a part of this evaluation, investigations of vibratory-compacted thoria-urania fuels are being conducted under the auspices of the Fuel Cycle Program. An important feature of this program is an assessment of the irradiation behavior of these thoria-base ceramic fuels.

This report summarizes the progress made to date on the irradiation program and related work, and describes plans for future experiments.

II. CURRENT WORK

The characteristics desired in the fuel material are that the particles be of near theoretical density, of controlled particle size and resistant to fragmentation during subsequent fabrication. The materials currently under investigation include oxide powders made by either the arc-fusion or sol-gel routes.[1] The latter process, as outlined in Fig. 1, lends itself to remote operation because of its simplicity. It is a chemical process which produces homogeneous, coarse, dense fragments while limiting the maximum processing temperature to 1200°C. The method consists of the steam denitration of a thorium nitrate solution, dispersion of the resultant thoria in water, blending with uranium nitrate hexahydrate at 80°C to produce a ThO_2-UO_3 sol, evaporation at approximately 90°C to form a gel, and calcination at 1200°C first in air and then in 4% H_2-argon. Properties of the sol-gel and arc-fused oxides incorporated in the irradiation

---

[1] D. E. Ferguson, et al, Preparation and Fabrication of ThO_2 Fuels, ORNL-3225 (June 5, 1962).

UNCLASSIFIED
ORNL-LR-DWG 66393R

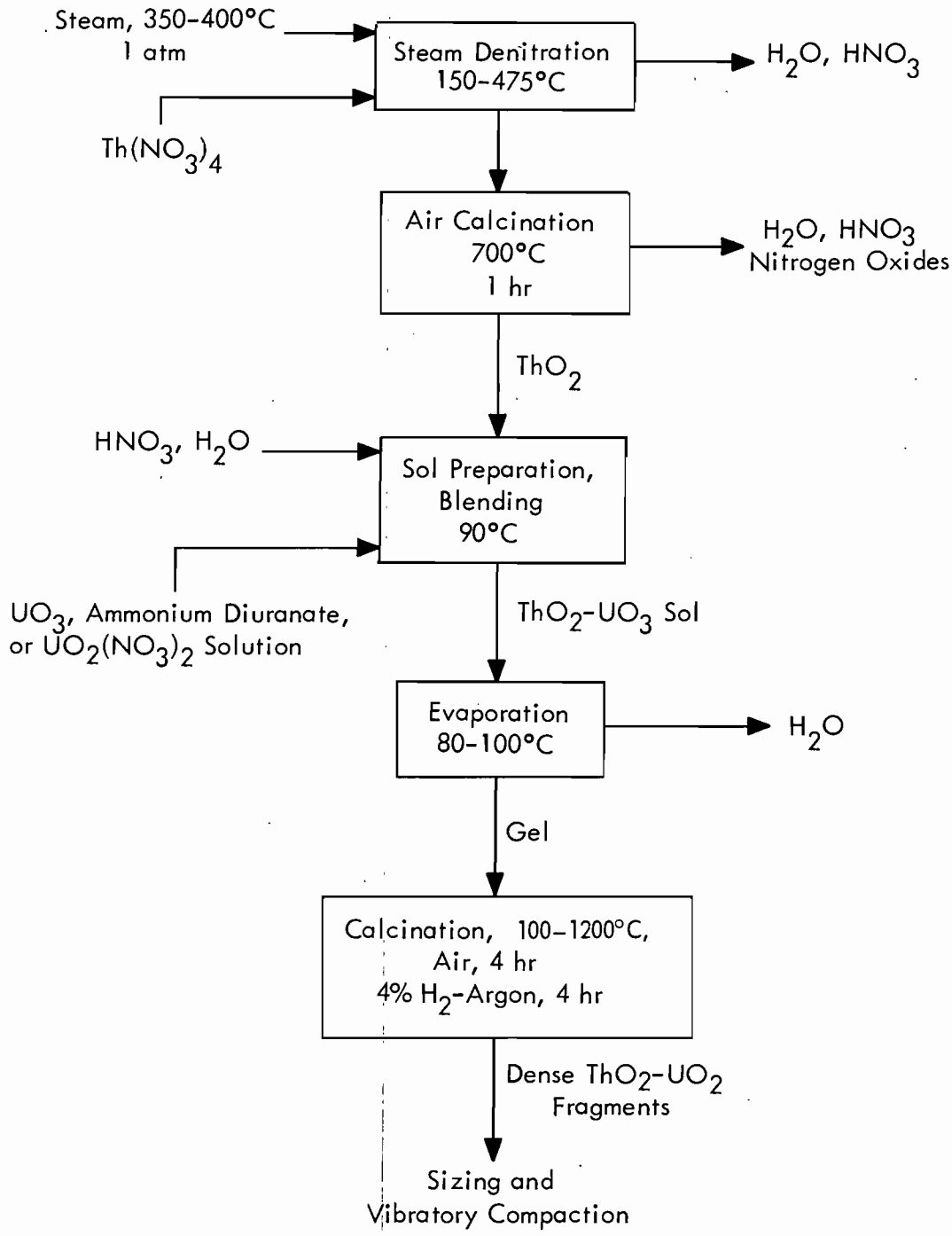

Fig. 1. Sol-gel process for preparation of dense thorium-uranium oxide.

specimens are summarized in Table 1. Representative photomicrographs are depicted in Fig. 2.

Similarly, vibratory compaction offers a significant process simplification over either the cold pressing and sintering or swaging techniques. Moreover, this fabrication route is readily adaptable to remote handling. After comminution of the oxide to a selected size distribution, the powder is vibrationally compacted in the fuel tubes using simple and inexpensive pneumatic vibrators. With appropriate process control, the compacted bulk densities of the sol-gel oxide are comparable to those attainable using arc-fused material, and generally range from 85 to 90% of theoretical density.

The bulk density of vibrated powder is primarily a function of particle size distribution. For optimum conditions, mixtures of coarse, medium, and fine size fractions are generally selected. The most widely used distribution for the irradiation capsules was 60 wt % -6 + 16 mesh, 15 wt % -50 + 140 mesh, 25 wt % -200 mesh. Typical densities achieved with vibratory compaction for several of the irradiation capsules are listed in Table 2.

Table 2. Results of Vibratory Compaction of Sol-Gel-Prepared ThO_2-UO_2 in NRX and ORR Reactor Fuel Tubes.

Oxide Lot	UO_2[a] wt %	Nominal Tube Dimensions: Length, in.	O.D., in.	Wall Thickness, in.	Bulk Density, g/cc
A	4.3	11	5/16	0.025	8.70
B	4.4	11	5/16	0.025	8.67
C	2.5	11	5/16	0.025	8.70
		7	5/8	0.020	8.55
D	3.9	11	5/16	0.025	8.65
		7	1/2	0.020	8.77

[a]Fully enriched in U-235.

Table 1. Summary of Properties of Uranium-Thorium Oxides Used in Fabrication of Irradiation Specimens

	Sol-gel A	Sol-gel B	Sol-gel C[c]	Sol-gel D[c]	Sol-gel E[c]	Arc Fused	Sol-gel S	PuO_2-ThO_2
Total U, wt %	4.31	4.39	4.01	2.50	4.0	3.96	5.21	Not Yet Available
U Enrichment, %	93	93	93	93	93	93	93	
Carbon, wt %	0.011	0.010	0.006	0.004	0.013	0.012	0.008	
Nitrogen, ppm	22	21	55	29	31	1130	30	
Iron, wt %	0.01	0.605	0.0265	0.014	0.016	0.013	0.03	
Silicon, ppm	600	500	< 20	< 10	< 10	20	20	
BET Surface Area (N_2) m^2/g	0.20	0.26	0.03	0.008	0.011	0.11	0.17	
O/U Ratio	2.005	2.005	2.03	2.02	2.02	2.01	2.005	
Volatile Matter Released in vacuum at 1200°C, cc/g	0.125	0.151	0.055	0.012	0.027	0.24	0.284	
Lattice Parameter, A	5.59121	5.59189	5.59263	-	5.59300	5.594	-	
Crystallite Size, A	2400	1700	2200	-	-	-	-	
Particle Density, g/cc[a]	9.94	9.92	9.76	9.97	9.92	10.11	10.0	
Packed Density, g/cc[b]	8.69±.03	8.69±.03	8.36	8.74	8.84	-	-	

[a]Toluene intrusion, pycnometric method. Theoretical density: 10.03 to 10.04 g/cc.

[b]Navco air vibrator, 1.25 in. piston; 5/16 o.d. x 11-in. stainless steel tube.

[c]Cooled in pure argon after calcination in hydrogen.

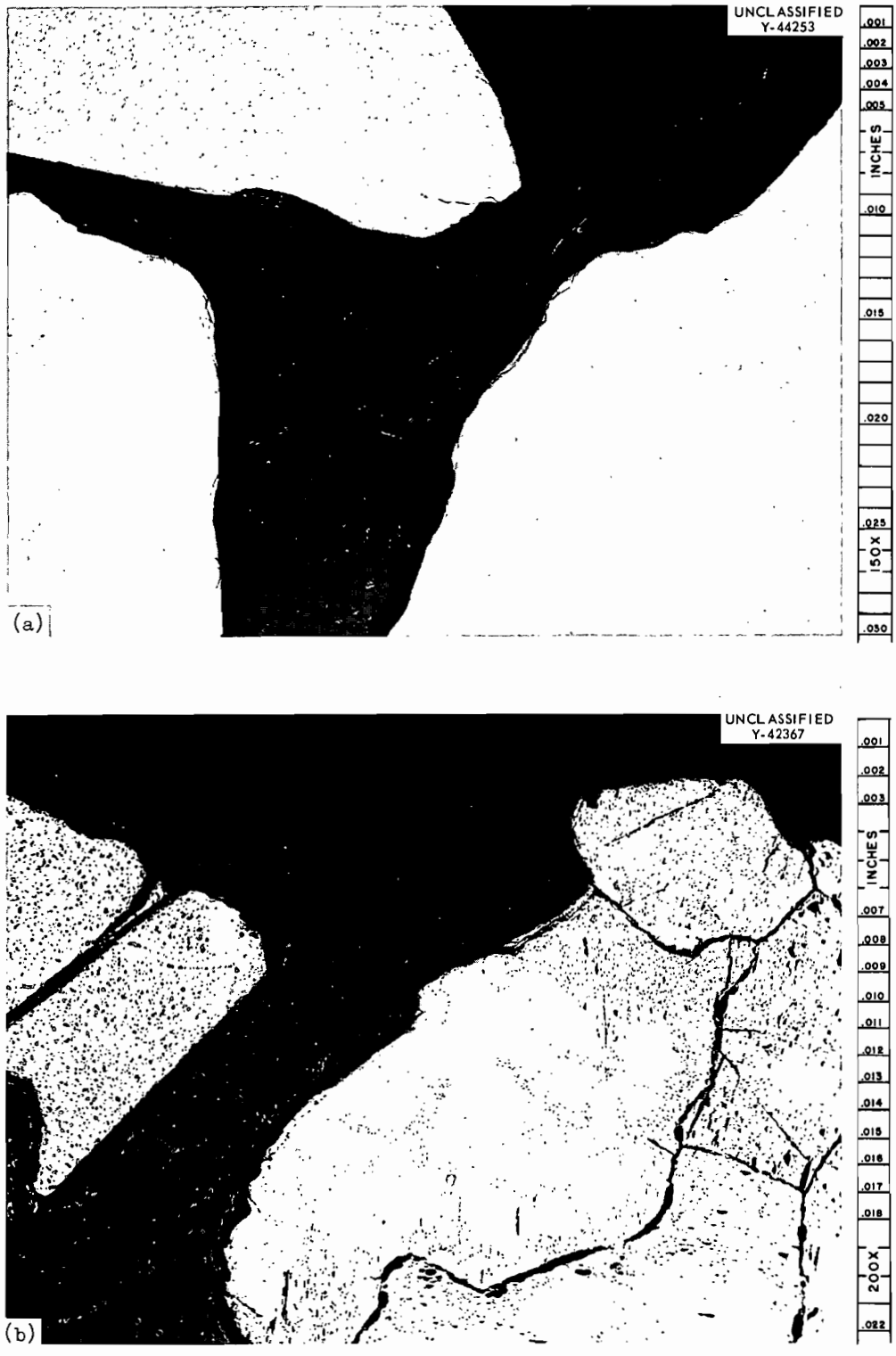

Fig. 2. Microstructure of ThO_2-UO_2 particles. (a) Sol-gel oxide "D" illustrative of the dense, defect-free particles obtained by chemical derivation. 50X. (b) Arc-fused oxide showing second phase impurities, porosity and fracture. 200X. Reduced 19.5%.

In support of this program, irradiation experiments to evaluate the in-pile behavior of fuel material prepared in the manner described above have been completed or are in progress in the NRX, MTR, and ORR. A summary of these tests is presented in Table 3. The more salient features of this program in its present state are as follows:

1. A comparison is being made between oxides produced by the sol-gel and arc-fusion routes (MTR Group I and NRX Group II capsules).
2. Type 304 stainless steel fuel tubes, 0.312-in. o.d. x 0.025-in. wall are specified as the cladding for many of the experiments. This approximates the 0.304-in. o.d. x 0.0205-in. wall geometry of the fuel pins for the Consolidated Edison Thorium Reactor (CETR) under construction at Indian Point, New York.
3. The peak linear heat ratings of 44,000 Btu/hr-ft* for the sol-gel oxide may be compared with 37,000 Btu/hr-ft in the Consolidated Edison Reactor.
4. Maximum burnups of 100,000 Mwd/M.T.-metal are anticipated in the ORNL program, as compared to 60,000 Mwd/M.T.-metal expected in the CETR.
5. Two experiments are in progress in the ORR (03-5 and 06-5) which will shed some light on the suitability of sol-gel oxide for advanced gas-cooled reactors at high surface temperature conditions. The two capsules (see Table 3) have an axial molybdenum thermowell containing a tungsten-rhenium thermocouple to continuously measure the centerline temperature. It is anticipated that this experimental arrangement will furnish some indication of the effective in-pile thermal conductivity of the sol-gel fuel material. Preliminary data have been obtained and the estimated thermal conductivity is 1.2 Btu/hr-ft-°F at 2430°F and 1.7 Btu/hr-ft-°F at 1800°F.

---

*This corresponds to a heat generation rate of 1250 w/cc and a surface heat flux of 550,000 Btu/hr-ft^2 for 0.312-in. diam x 0.025-in. wall clad pins.

Table 3. Summary of Fuel Cycle Irradiation Program[a]

Specimen	Type of Oxide	Uranium Content (wt %)	Specimen Dimensions (in.) Length	Outside Diameter	Wall	Clad Temp. (°F)	Compacted Density (% T.D.)	Estimated Linear Heat Rating (Btu/hr-ft)	Target Burnup Total (f/cc)	Mwd/M.T. of Metal	Status In	Out
					ORR POOLSIDE							
03-5	Sol-gel D	2.55	7	0.625	0.020	1300	8.60	40,000		5,000	12-17-61	9-62
06-5	Sol-gel D	2.55	7	0.625	0.020	1000	8.54	40,000		5,000	12-17-61	9-62
					NRX-GROUP I[b]							
X-1, X-2, X-8	Sol-gel A	4.31	11	0.312	0.025	~ 200	8.4-8.6	24,000	4.02×10^{20}	20,000	4-6-61	5-22-62
H-3, O-3, O-4, O-5, O-6	Sol-gel B	4.39	11	0.312	0.025	~ 200	8.5-8.6	24,000	4.06×10^{20}	20,100	4-6-61	5-22-62
					NRX-GROUP II[c]							
A-1, A-2	Fused and Ground	3.9	22-1/2	0.312	0.025	~ 200	8.58-8.60	20,000		3,500	11-20-61	2-16-62
C-3, C-4	Sol-gel C	4.01	22-1/2	0.312	0.025	~ 200	8.28-8.35	20,000		3,500	11-20-61	2-16-62
					NRX-GROUP III[d]							
S-1, S-2, S-3, S-4, S-5, S-7	Sol-gel S	5.0	39	0.312	0.025	~ 200	8.80-8.86	28,000	4.78×10^{20}	23,000	5-24-62	~ 6-63
P-4, P-5, P-6	PuO_2 Sol-gel	4.0[e]	11-1/4	0.312	0.025	~ 200	7.44-7.61	27,000	3.87×10^{20}	22,000	5-24-62	~ 6-63
					MTR-GROUP I							
U-1 (MTR-43-59)	Fused and Ground	3.9	11-1/4	0.312	0.025	~ 200	8.60	44,000	3.22×10^{20}	15,900	11-6-61	4-2-62
U-2 (MTR-43-60)	Fused and Ground	3.9	11-1/4	0.312	0.025	~ 200	8.59	44,000	1.01×10^{21}	49,600	11-6-61	~ 3-63
U-3 (MTR-43-61)	Fused and Ground	3.9	11-1/4	0.312	0.025	~ 200	8.58	44,000	1.52×10^{21}	75,000	11-27-61	~12-63

Table 3 (continued)

Specimen	Type of Oxide	Uranium Content (wt %)	Specimen Dimensions (in.) Length	Outside Diameter	Wall	Clad Temp. (°F)	Compacted Density (% T.D.)	Estimated Linear Heat Rating (Btu/hr-ft)	Target Burnup Total (f/cc)	Mwd/MT of Metal	Status In	Out
Z-5 (MTR-43-63)	Sol-gel E	4.0	11-1/4	0.312	0.025	~ 200	8.65	44,000	3.25×10^{20}	15,900	11-6-61	4-2-62
Z-7 (MTR-43-64)	Sol-gel E	4.0	11-1/4	0.312	0.025	~ 200	8.65	44,000	1.01×10^{21}	49,700	11-6-61	~ 3-63
Z-8 (MTR-43-65)	Sol-gel E	4.0	11-1/4	0.312	0.025	~ 200	8.58	44,000	1.52×10^{21}	75,000	12-18-61	~ 12-63
U-5 (MTR-43-62)	Sol-gel E	4.0	11-1/4	0.312	0.025	~ 200	8.73	44,000	2.06×10^{21}	100,000	10-16-61	~ 9-64

[a] All capsules contain fully enriched UO_2 in solid solution with ThO_2 except where noted. The cladding is type 304 SS.

[b] Holder number 3.

[c] Holder number 5.

[d] Holder number 4.

[e] Pu content.

Table 3. ADDENDUM

Comments on Irradiation Tests

SPECIMEN	COMMENT
	ORR POOLSIDE
03-5 06-5	Both have thermowells, 0.125 o.d. Both have 300 psi external pressure. Estimated central temperature for 03-5 is 3540°F and 2600°F for 06-5.
	NRX GROUP I
X-1, X-2, X-8 H-3, O-3, O-4, O-5, O-6	Estimated center line temperature 2230°F
	NRX GROUP II
A-1, A-2 C-3, C-4	Off specification oxide
	NRX GROUP III
S-1, S-2, S-3, S-4, S-5, S-7 P-4, P-5, P-6	Powder was tamp-packed
	MTR GROUP I
U-1	Under examination at GE-Val
U-2 U-3 Z-5	Under examination at GE-Val
Z-7 Z-8 U-5	

6. The PuO_2-ThO_2 fuel-bearing capsules were placed in-pile in May of this year. For expediency, these powders were simply tamp-packed in the rods. This powder also had been made by the sol-gel process.

The 11-in. long NRX Group I and MTR specimens performed satisfactorily; however, operational problems were observed with the longer (22-1/2 in.) NRX Group II capsules. Fission-product buildup was detected in the coolant water around the holder containing these specimens plus one hundred 4.5-in. long pelleted fuel pins. Because capsule C-3 was stuck to the wall of the holder it had been suspected that bowing of the longer fuel rods might have occurred, creating a hot spot on the cladding; however, subsequent visual and leak-test examination at the ORNL Solid State Division hot cell shows no indications of a failure in the vibratory compacted rods. To preclude bowing and stabilize the 39-in. rods (NRX Group III), which were being inserted in-pile before inspection of the NRX Group II rods was complete, stainless steel spring wire was helically wound along the length and fusion welded at the ends. To date, these capsules have behaved without incident.

Postirradiation examination of the first two capsules (U-1 and Z-5) was initiated in May. The capsules were inspected and found to be leak-tight. No significant dimensional changes were observed, although there were slight indications of bowing.

In conjunction with in-pile irradiation studies, neutron-activation (D')[2,3] studies are underway to characterize fission-gas release from sol-gel and arc-fused oxide. Individual samples containing 0.2-0.6 mg of U^{235} were irradiated in the graphite reactor to an integrated dose of 6.77×10^{17} nvt, then vacuum-induction annealed and the release of Xe-133 continuously monitored in a charcoal bulb.

The release-rate factor, D', is related to the fraction of gas released. For diffusion controlled release, a plot of the fraction of gas

---

[2] D. F. Toner and J. L. Scott, GCR Quar. Prog. Rep. Dec. 31, 1959, ORNL-2888, pp. 68-72 (Feb. 9, 1960).

[3] A. H. Booth and G. T. Rymer, Determination of the Diffusion Constant of Fission Xenon in UO_2 Crystals and Sintered Compacts, CRDC-720(Aug.1958).

released at a given temperature as a function of the square root of time will be linear, and D' can be readily determined from the slope of the curve. By determining D' at several temperatures and plotting the log D' versus the reciprocal of the absolute temperature, the activation energy for the diffusion process can be determined.

Available data for sol-gel ThO_2-5 wt % UO_2, fused-and-ground ThO_2-4.5 wt % UO_2, and fused-and-ground UO_2 are summarized in Table 4.[4,5,6]

The fraction of Xe-133 released as a function of temperature for the sol-gel oxide is shown in Fig. 3. Observe that after an initial burst of gas, the release mechanism was diffusion. Results for the arc-fused ThO_2-UO_2 were comparable. Release was lower by a factor of 10 for the coarse fraction than for the medium size fraction. It is also notable that whereas 30.6% of the Xe-133 was released from the sol-gel ThO_2-UO_2 at 2200°C after 25 hr, the Xe-133 was completely released from the UO_2 material at 1900°C for a comparable time and the UO_2 sample vaporized. This clearly illustrates the greater stability of ThO_2-UO_2 compared to UO_2, which is to be expected since the melting point of ThO_2 is 3300°C compared to 2750°C for UO_2.

From the slope of the curve of log D' vs the reciprocal of the absolute temperature (Fig. 4) the activation energy for diffusion of Xe-133 from sol-gel and arc-fused ThO_2-UO_2 was calculated to be 75.9 kcal/mole and 25 kcal/mole, respectively. These values compare to 70-80 kcal/mole reported for diffusion of xenon from UO_2.[7] The difference in activation energy between sol-gel and arc fused ThO_2-UO_2 may be due to the structural differences between the two materials (Fig. 2).[6] Sol-gel oxide is virtually

---

[4] J. L. Scott and D. F. Toner, GCR Quar. Prog. Rep. March 31, 1961, ORNL-3102, pp. 93-97 (May 19, 1961).

[5] J. L. Scott, D. F. Toner, and R. E. Adams, GCR Quar. Prog. Rep., June 30, 1961, ORNL-3166, pp. 89-91 (Aug. 28, 1961).

[6] J. L. Scott, D. F. Toner, and R. E. Adams, GCR Quar. Prog. Rep., Dec. 31, 1961, ORNL-3254, pp. 153-5 (March 26, 1962).

[7] W. B. Cottrell, J. L. Scott, H. N. Culver, and M. M. Yarosh, Fission Products Release From UO_2, ORNL-2935 (Sept. 13, 1960).

Table 4. Neutron-Activation Studies on Ceramic Fuel Powders

Fuel	Test Temperature (°C)	Total Fraction Release	Total Test Time (hr)	Release-Rate Parameter D' (sec^{-1})
ThO_2-5 wt % UO_2[a]	1440	4.43×10^{-3}	18.8	4.64×10^{-12}
	1640	9.38×10^{-3}	22.7	7.32×10^{-11}
	1760	1.23×10^{-2}	19.6	1.10×10^{-10}
	2015	3.47×10^{-2}	48.0	1.27×10^{-9}
	2200	3.06×10^{-1}	25.0	b
ThO_2-4.5 wt % UO_2[c]	1000	2.9×10^{-3}	25.0	1.7×10^{-12}
	1200	8.9×10^{-3}	25.0	6.1×10^{-12}
	1400	3.2×10^{-3}	25.0	1.4×10^{-11}
	1600	3.94×10^{-2}	25.0	3.5×10^{-11}
ThO_2-4.5 wt % UO_2[d]	1000	3.2×10^{-4}	25.0	5.5×10^{-14}
	1200	8.6×10^{-4}	25.0	1.5×10^{-13}
	1400	2.3×10^{-3}	25.0	1.4×10^{-12}
UO_2[c]	1400	5.91×10^{-3}	22.5	1.13×10^{-11}
	1600	1.67×10^{-2}	24.5	2.66×10^{-10}
UO_2[e]	1900	Complete	25.0	b

[a]Prepared by sol-gel process (sample A-2177-6); similar to sol-gel B

[b]Release not controlled by diffusion

[c]Prepared by arc-fusion process, -70 + 100 mesh

[d]Prepared by arc-fusion process, -10 + 16 mesh

[e]Pellet fuel

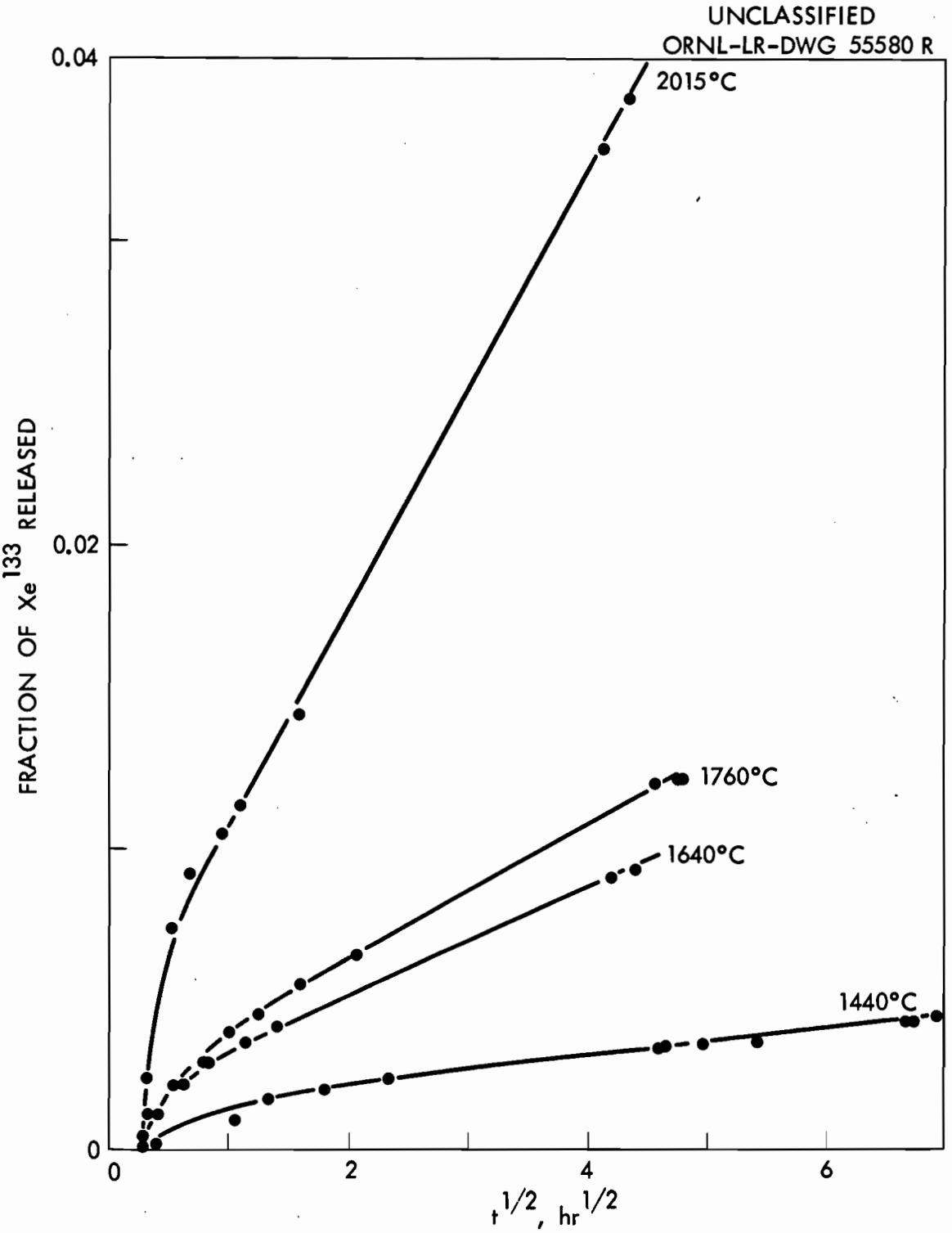

Fig. 3. Release of Xe-133 from ThO_2-5 wt % UO_2 prepared by the sol-gel process. Results obtained by neutron-activation technique.

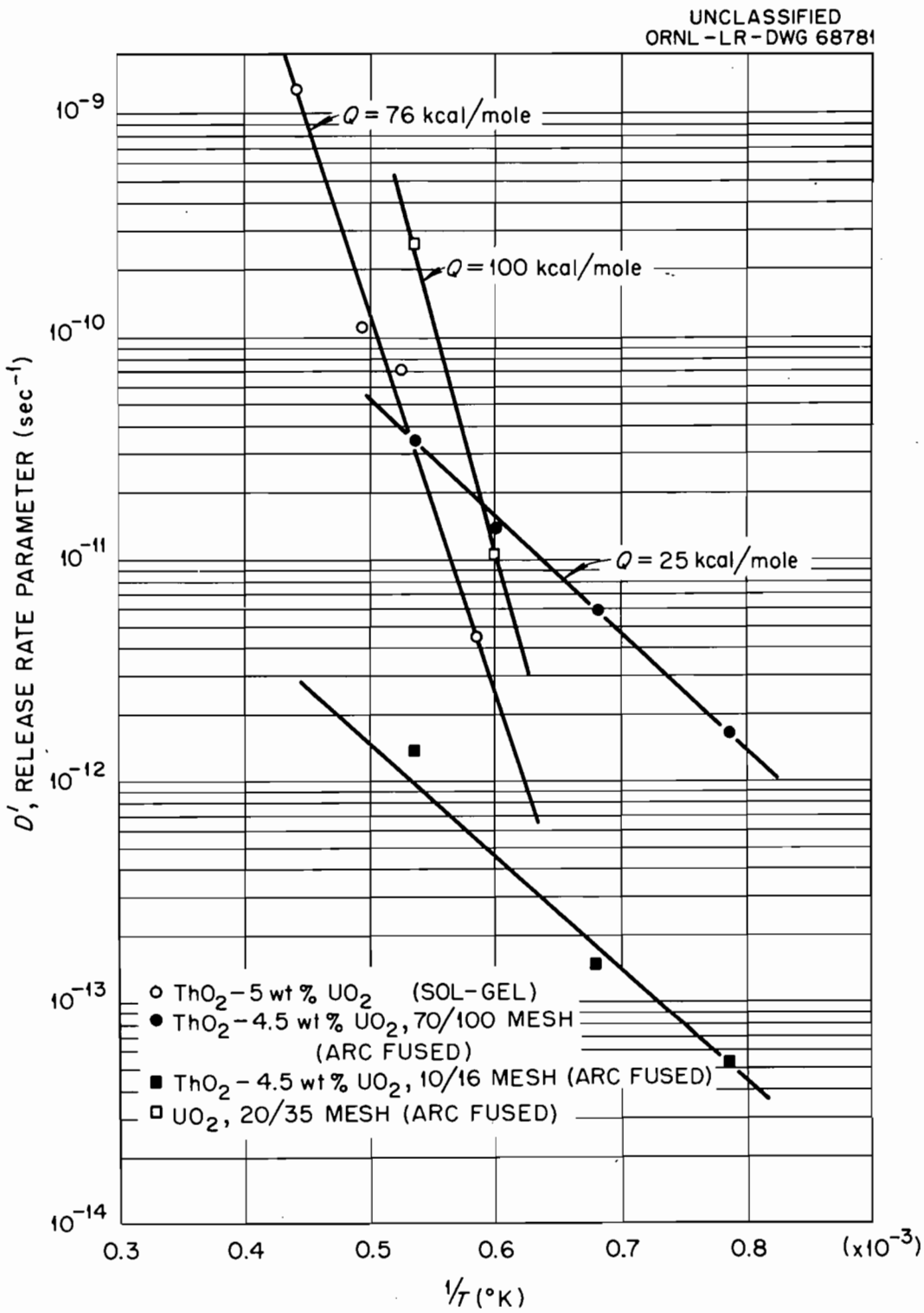

Fig. 4. Log D' vs 1/T for various oxide fuels. $D' = D/a^2$ where D = diffusion coefficient and a = radius of the uniform sphere.

99.9% dense and is single phase. However, arc-fused oxide contains numerous cracks, pores, and some second phase white precipitate, which is probably metallic uranium.

In addition to the neutron activation tests, specimens are being prepared for thermal conductivity determinations. This includes an experiment which is underway in a device which simulates the thermal conditions a fuel element encounters in service.[8]

Also included in the current program is the production of fuel rods containing U^{233} and thorium oxides for Brookhaven National Laboratory. This job entails development of the required processes, design and construction of a pilot plant facility, and production of 1000 U-233 bearing rods for Brookhaven National Laboratory.

The proposed method of producing these fuel rods[9] consists of essentially three processes: (1) solvent extraction purification of the U^{233}, (2) preparation of a mixed sol-gel ThO_2-UO_2 fuel suitable for vibratory compaction, and (3) oxide densification by vibratory compaction. The process flow diagram is illustrated in Fig. 5.

It will be observed that there is a close correlation between this fabrication scheme and that previously discussed with the exception that U^{233} will be substituted for U^{235}. It is hoped that this facility will provide a means for producing irradiation specimens using the full thorium-U^{233} fuel cycle. Such an effort would be a satisfying demonstration for the Fuel Cycle Program and would measurably aid in determining the merits of U^{233} as a reactor fuel.

III. POSTIRRADIATION EXAMINATION PROGRAM FOR FY-1963 AND FY-1964.

As shown in Table 3, the status of the irradiation test program is such that many of the capsules were removed during the latter part of

---

[8] W. R. Martin and J. R. Weir, A Device to Simulate the Service Thermal Conditions in EGCR-Type Fuel Elements, ORNL-3032 (Dec. 28, 1960).

[9] J. T. Lamartine and A. L. Lotts, Thorium-U^{233} Fuel Rod Facility - Description of the Facility and Fuel Rod Fabrication Process, ORNL-CF-62-2-26 (Feb. 27, 1962).

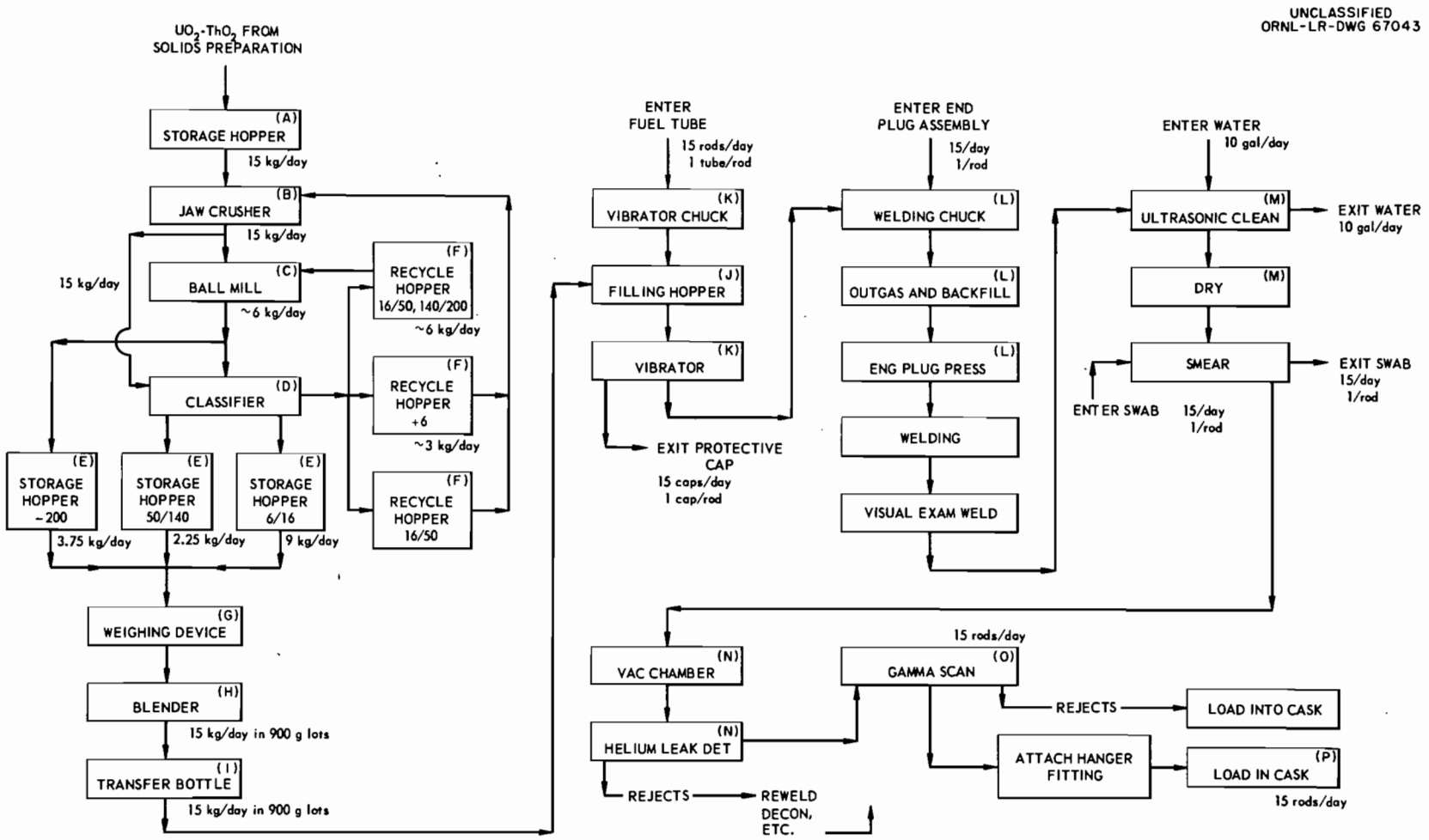

Fig. 5. Thorium-U^{233} fuel rod facility process flow diagram.

FY-1962 or will be discharged before the end of FY-1963.

The utility of the program is obviously a function of the number of rods that can be examined after irradiation. At present, MTR Group I capsules ORNL 43-59 (U-1) and ORNL 43-63 (Z-5), and ORNL 43-41 (a high burnup rod containing pelletized ThO_2-UO_2 fuel) are undergoing examination at GE-Val. These capsules arrived at Vallecitos in May. Additionally, the four rods irradiated in the NRX reactor (A-1, A-2, C-3, C-4), whose holder showed a failure, have been visually examined and leak-tested at ORNL. One or two of the specimens will be sent to GE-Val for detailed examination. Finally, the NRX Group I specimens were discharged according to schedule on May 22.

The following tests are proposed for the majority of these capsules:

1. Examine visually and photograph.
2. Measure rod length, diameter, and bow. Diameter and bow measurements are made at one-inch intervals along the length, at both 0° and 90°.
3. Gamma-scan along length of rod to determine active fuel length, flux pattern, and point of maximum burnup.
4. Puncture rod and collect contained gases. Analyze gas samples by gamma-ray and mass-spectrometry to measure fission-gas release.
5. Section rod transversely at point of peak burnup, as indicated by gamma scan, and examine visually for void formation, grain growth, sintering or any unusual appearance. Photograph at about 4X. If void formation or grain growth is observed, section at one to two-inch intervals along rod to determine axial extent of structural changes.
6. Impregnate with plastic and section longitudinally a two-inch length of the rod. This section should be selected from anomalous regions in the gamma scan, if they exist; otherwise, from the peak burnup area. Polish, if necessary, and photograph at low magnification.

7. Select a representative fuel sample, preferably a complete transverse section, from the peak burnup region and determine burnup by radiochemical methods.
8. Determine the dissolution rate of the fuel in a specific acid concentration.* (Possibly this could be achieved during dissolution of the burnup sample). This information would be compared with dissolution data obtained from other fuels of a somewhat similar nature.
9. Metallographically examine one fuel sample and one clad sample from each rod at magnifications of 100X and greater.

Other desirable examinations which are being considered for a limited number of samples include x-ray diffraction, radial fission product distribution, and isotopic burnup analysis.

In lieu of a detailed examination on all of the capsules, superficial tests would be made on the remaining capsules. This inspection would involve:

1. Visual examination and photography.
2. Dimensional measurements.

It is anticipated that after these cursory examinations, the capsules might be used for chemical processing studies.

A summary of the hot-cell work to be performed in FY-1963 and FY-1964 is presented in Table 5. Several factors were weighed before arriving at these decisions, including (1) costs, (2) previous arrangements made in FY-1962 to discharge specimens from the reactors, and (3) an evaluation of the parameters deemed most pertinent in characterizing vibratory compacted ThO_2-UO_2 fuel cores for power reactors.

The hot cell inspections outlined in Table 5 for FY-1963 will enable comparisons to be made between fused-and-ground and several types of sol-gel oxide, varying amounts of uranium in the mixed oxide, several linear heat ratings, different in-pile exposures, and perhaps rods of two lengths. The detailed postirradiation examinations will indicate the effects of these variables on dimensional stability, fission-gas release,

---

*Reference Procedure: BMI-1560.

Table 5. Postirradiation Examination of Fuel Cycle Capsules in FY-1963 and FY-1964.

Capsules	Reactor Discharge Date	Type of Examination	Parameters Analyzed
		FY-1963*	
NRX Group 1 (X-1, X-2, X-8 H-3, O-3, O-4, O-5, O-6	5-22-62	Detailed examination on sol-gel A and sol-gel B specimens receiving highest and lowest dosage; superficial inspection of other capsules.	Comparison of sol-gel A vs sol-gel B; effect of heat flux.
NRX Group II (A-1, A-2 C-3, C-4)	2-19-62	Preliminary examination at ORNL (visual, dimensional, and leak-test). If flaws are apparent send to GE-Val for more detailed examination.	Evaluation of a possibly defective specimen; longer (22-1/2 in.)rods.
MTR-Group I U-1, Z-5)	4-2-62	Detailed examination - these capsules are now at GE-Val.	Compare fused-and-ground and sol-gel oxides after an estimated burnup of 15,000 Mwd/M.T.-metal.
MTR Group I (U-2, Z-7)	~ 3-63	Detailed examination	Same as for U-1 and Z-5 but at a burnup of approx 50,000 Mwd/M.T.-metal.
		FY-1964	
NRX Group III (S-1, S-2, S-3 S-4, S-5, S-7 P-4, P-5, P-6	~ 6-63	Detailed examination on high and low burnup "S" and "P" specimens; cursory examination on balance.	Effects of higher uranium content (5%) and greater length (39 in.); comparison with Pu-bearing rods.
MTR Group I (U-3, Z-8)	~ 12-63	Detailed examination	Similar to above MTR capsules but after about 75,000 Mwd/M.T.-metal.

*High burnup "PWR Capsules" containing UO_2 pellets may also be examined.

and structural changes in the oxide.

Examinations in FY-1964 would cover the longer sol-gel (39 in.) specimens, the Pu-bearing rods, and the MTR capsules irradiated to an estimated burnup of 75,000 Mwd/M.T.-metal.

IV. PLANNED EXPERIMENTS

The experiments currently or soon to be in-pile (Table 3) provide comparisons and assessments in the following areas: (1) type of oxide, (2) content of fissile material, (3) fuel rod length, (4) irradiation temperature, (5) heat generation rate, and (6) burnup. Evaluation of these capsules will, of course, continue during FY-63. In addition to completing this work, it is reasonable that the scope of the program be broadened by embarking upon new areas of investigation. Consequently, a series of new irradiation experiments has been devised; these are summarized in Table 6. Highlights of the planned work, which involves the experiments in progress (Table 3) or in the conceptual stage (Table 6), are as follows:

1. Exposure at higher heat ratings (specimens E-6, E-8, 3,4,5 & 6) - a peak of approx 55,000 Btu/hr-ft as compared to the present estimated peak of 44,000 Btu/hr-ft. If these capsules operate successfully, the linear heat rating would be increased incrementally to 85,000 Btu/hr-ft (specimens 9, 10, 11 & 12).
2. Irradiation to higher burnups, with a maximum of 100,000 Mwd/M.T.-metal (2.06×10^{21} f/cc). This can be accomplished by leaving one of the MTR Group I capsules (see Table 3) in the reactor until the desired burnup is achieved.
3. Variations in fuel chemistry. This would include (a) testing fuel rods with a uranium composition series (specimens E-6, E-8, 3,4,5 & 6), and (b) a comparison of air-fired (capsules 1a,2a) vs. H_2-fired (1b,2b) sol-gel oxides. In the present fabrication scheme, the final calcination of the gel is conducted in a reducing atmosphere. This is a troublesome operation in the sol-gel

Table 6. Proposed Oxide Irradiation Experiments[a,b]

Specimen	Type of Oxide	Uranium Content (wt %)	Cladding Material	Specimen Dimensions Length (in.)	o.d. (in.)	Wall (in.)	Cladding Temperature (°F)	Estimated Linear Heat Rating (Btu/hr-ft)	Desired Burnup (Mwd/M.T. of Metal)	Approximate Starting Date	Purpose and Comments
						MTR					
1,2	a) sol-gel (air-fired)	5.0	304 SS	11	0.312	0.025	~ 200	55,000	10,000	12/62	Comparison between air-fired and H_2-fired oxides to evaluate stoichiometry effects.
1,2	b) sol-gel (H_2-fired)	5.0	304 SS	11	0.312	0.025	~ 200	55,000	10,000	12/62	
E-6, E-8	sol-gel "S"	5.0	304 SS	22	0.312	0.025	~ 200	55,000	25,000	10/62	Higher heat ratings, uranium composition series.
3,4	sol-gel	7.5	304 SS	11	0.312	0.025	~ 200	55,000	25,000	12/62	
5,6	sol-gel	10.0	304 SS	11	0.312	0.025	~ 200	55,000	25,000	12/62	
7,8	sol-gel	c	Zr-4	11	0.436	0.020	~ 600	51,000	20,000	c	Simulate SSCR fuel & geometry.
9,10	sol-gel	c	Zr-4	11	0.436	0.020	~ 600	68,000	20,000	c	
11,12	sol-gel	c	Zr-4	11	0.436	0.020	~ 600	85,000	20,000	c	
BNL-1,2	sol-gel with U^{233}	3.0	Zr-2	22	0.499	0.035	~ 200	c	10,000	2/63	Fabricate remotely in Kilorod Facility.
						VBWR					
BNL-3	sol-gel with U^{233}	3.0	Zr-2	40	0.499	0.035	550	c	c	7/63	16-rod bundle remotely fabricated and assembled in Kilorod Facility

[a]Except where indicated, capsules contain fully enriched U^{235} O_2 in solid solution with ThO_2.

[b]This table does not include an evaluation of the irradiation behavior of specimens fueled with $(U,Th)C_2$ graphite, scheduled for investigation in FY-1964.

[c]To be determined.

Table 6. Proposed Oxide Irradiation Experiments[a,b]
(continued)

Specimen	Type of Oxide	Uranium Content (wt %)	Cladding Material	Specimen Dimensions Length (in.)	o.d. (in.)	Wall (in.)	Cladding Temperature (°F)	Estimated Linear Heat Rating (Btu/hr-ft)	Desired Burnup (Mwd/M.T. of Metal)	Approximate Starting Date	Purpose and Comments
					MARITIME-ORR LOOP or VBWR						
L-1	sol-gel	5.0	Zr-2 or Zr-4	c	0.3125 or 0.500 to	0.015 to 0.025	500	c	10,000	1-63	Compatibility studies of Zircaloy with fuel and coolant. Thin cladding.
L-2	sol-gel	5.0	304 SS	c	0.3125 or 0.500 to	0.010 to 0.020	500	c	10,000	1-63	Thin-walled cladding evaluation.

[a]Except where indicated, capsules contain fully enriched $U^{235}O_2$ in solid solution with ThO_2.

[b]This table does not include an evaluation of the irradiation behavior of specimens fueled with $(U,Th)C_2$ graphite, scheduled for investigation in FY-1964.

[c]To be determined.

process and its elimination could prove quite beneficial. The purpose of the irradiation tests will be to determine whether simply firing in air, which presumably will result in non-stoichiometry, will significantly affect fission gas release and structural changes.

4. Preparation and irradiation of specimens (7 through 12) that approximate the Spectral Shift Control Reactor (SSCR) fuel rods. The proposed cladding for these elements is Zircaloy-4, 0.436-in. o.d. x 0.020-in. wall. This experiment has been discussed with personnel from the Babcock & Wilcox Company. They tentatively indicated a willingness to assist in the work by fabricating the fuel capsules and recommending appropriate irradiation parameters.
5. Investigation of Zircaloy-2 and/or Zircaloy-4 as cladding materials under conditions simulating reactor operation (experiment L-1). These alloys offer improved neutron economy compared to type 304 stainless steel. The primary objective of these tests will be to examine fuel-clad and clad-coolant interactions at elevated temperatures. Of particular interest is the resistance of the clad to hydriding. A test loop, such as the Maritime loop in the ORR, or a high temperature test reactor (e.g., VBWR) will be required to perform meaningful experiments with Zircaloy sheathing.
6. Irradiation of thin-walled stainless steel capsules, in which the clad would collapse under the system pressure (experiment L-2). This again necessitates a loop and should be given lower priority. It is possible that this experiment could be combined with L-1 and the irradiation conducted in the VBWR or ORR.
7. Irradiation of fuel rods (BNL-1, -2) in the MTR and a large fuel bundle (experiment BNL-3) in the VBWR utilizing components fabricated remotely in the Kilorod Facility. These elements will contain U^{233}. The bundle will be assembled remotely by a mechanical scheme - a demonstration of remote fabri-

cation and assembly. This facet of the program will represent a major step toward accomplishing the ultimate objective of evaluating U^{233} as a reactor fuel, and should be given top priority.

8. New Fuel Materials. As presently conceived, fabrication of these capsules* would not be undertaken until FY-1964. They would probably involve testing of UC_2-ThC_2-graphite (HTGR or PBRE Fuel Element) bearing fuel rods prepared in a manner yet to be developed. The method of fabrication will be one which is amenable to remote operations.

Finally, additional supplementary out-of-pile data must be generated on ThO_2-UO_2 materials. Studies should be initiated or expanded in several categories including:

1. Characteristics of sol-gel powder particles,
2. Sintering behavior,
3. Dimensional behavior of simulated fuel element,
4. Thermal conductivity,
5. Neutron-activation,
6. Waterlogging.

---

*See footnote b in Table 6.

ACKNOWLEDGMENT

Obviously a comprehensive program such as this represents the combined efforts of many persons and disciplines. Particular recognition is made to:

J. W. Ullmann D. E. Ferguson W. C. Thurber E. S. Bomar L. R. Weissert (B & W)	Program Planning
W. S. Ernst O. C. Dean C. C. Haws J. W. Snider	Specimen Manufacture
F. R. McQuilkin J. W. Ullmann V. A. DeCarlo S. D. Clinton	Irradiations
J. L. Scott D. F. Toner	Neutron Activation Studies
M. F. Osborne D. F. Toner	Postirradiation Examinations

Distribution

1-3. DTIE, AEC
4. M. J. Skinner
5. Document Reference Section
6. M. R. Hill