OCT 1 1963

OAK RIDGE NATIONAL LABORATORY
operated by
UNION CARBIDE CORPORATION
for the
U.S. ATOMIC ENERGY COMMISSION

Facsimile Price $ 2.60
Microfilm Price $ .83
Available from the
Office of Technical Services
Department of Commerce
Washington 25, D. C.

ORNL-TM-682
COPY NO. - 1
DATE - September 12, 1963

STACKED CLONE CONTACTOR DEVELOPMENT: MARK I

W. E. Dunn

MASTER

ABSTRACT

A stacked clone contactor, which decreases the time of contact between the organic solvent and radioactive materials in solvent extraction processing, has been developed. In flooding and holdup studies with kerosene and 0.08 M HNO_3, at an A/O volume ratio of 1 the total flooding throughput was 1.1 liter/min. This corresponds to a solvent holdup time of approximately 4 sec per mechanical stage. Stage efficiencies for A/O's from 1.0 to 3.5 and 32 to 85% flooding varied from 20 to 75%. The extraction system used to evaluate the contactor was: benzoic acid-Supersol-0.078 M HNO_3. Equilibria for this system were found to be represented by

$$y = (0.0924 \pm 0.0081)x^2 + (2.40 \pm 0.21) \times 10^{-6}x^4$$

where y and x are, respectively, the organic and aqueous benzoic acid concentrations. Several extraction runs were completed in which Amsco was used as the solvent instead of Supersol.

NOTICE

This document contains information of a preliminary nature and was prepared primarily for internal use at the Oak Ridge National Laboratory. It is subject to revision or correction and therefore does not represent a final report. The information is not to be abstracted, reprinted or otherwise given public dissemination without the approval of the ORNL patent branch, Legal and Information Control Department.

1.0 INTRODUCTION

The stacked clone contactor program is directed toward the development of a continuous countercurrent liquid-liquid extraction device which maintains a high throughput to holdup ratio. Such a machine has a short solvent residence time and therefore would be applicable to solvent extraction processes where solvent degradation due to radiation exposure becomes a significant factor. The contactor under development is physically compact in size and would require less shielding than larger units, such as pulsed columns, for processing highly active streams.

2.0 STACKED CLONE CONTACTOR DESIGN

A schematic flow diagram of the apparatus is shown in Fig. 1. Five Lucite hydroclones are stacked vertically above one another. Each hydroclone, 3 in. long, has a top diameter of 3/4 in. and tapers to 1/4 in. with an underflow port machined out of the bottom (Fig. 2). Underflow ports are provided with take-offs for recirculation through an Eastern D-11 centrifugal pump to a 1/8-in.-thick stainless steel feed plate which injects a stream tangentially to the top of the clone below. The only physical contact between hydroclone stages is through the vortex finder plates which have a 1/4-in.-long section of 7/32-in.-i.d. tubing inserted in a hole in the center of the plate. Figure 3 shows the vortex finder, a top view of the hydroclone, and the feed plate. This apparatus was designed by M. E. Whatley and W. M. Woods, and a model was built prior to the author's entry on the development.

The cascade was operated with the aqueous phase continuous and a hydroclone recirculation rate of 1 gpm. Kerosene was used for the organic phase, and 0.08 M HNO_3 for the aqueous. It was found that the organic phase could be successfully injected into the column through the bottom recirculation pump line and the aqueous phase through the top recirculation pump line. The organic was metered from a 55-gal solvent tank through a Maisch gear pump and a rotameter. Provision was made to pump the organic from a sight glass to measure flow rates if any stray aqueous droplets should become entrained in the rotameter. An aqueous stream can be gravity-fed from a 300-gal aqueous feed makeup tank. The organic phase proceeds up-column through the low pressure vortex while the induced underflow effect moves the heavy phase down-column along the walls of the hydroclones. The apparatus operating countercurrently is shown in Fig. 4. The threadlike vortex of organic is visible in the center of the clones.

W. M. Woods designed a unique device for interface control.[1] A D/P cell is installed across the recirculation pump to the top hydroclone. The density of the fluid passing through the pump is directly proportional to the ΔP developed by the pump. This ΔP is sensed by the D/P cell and an air signal is sent to a pneumatic valve on the aqueous inlet line such that a constant density is maintained in the pump line. Thus a constant solvent inventory or interface is maintained in the top section.

One basic function of a top section for the contactor, in addition to providing room for interface control, is to separate phases rapidly, providing an aqueous-continuous phase for recirculation to the top hydroclone and a clear organic phase to take off from the cascade. A small top section volume is desirable to minimize solvent holdup. Three basic top section designs have been tested on the contactor (Fig. 5).

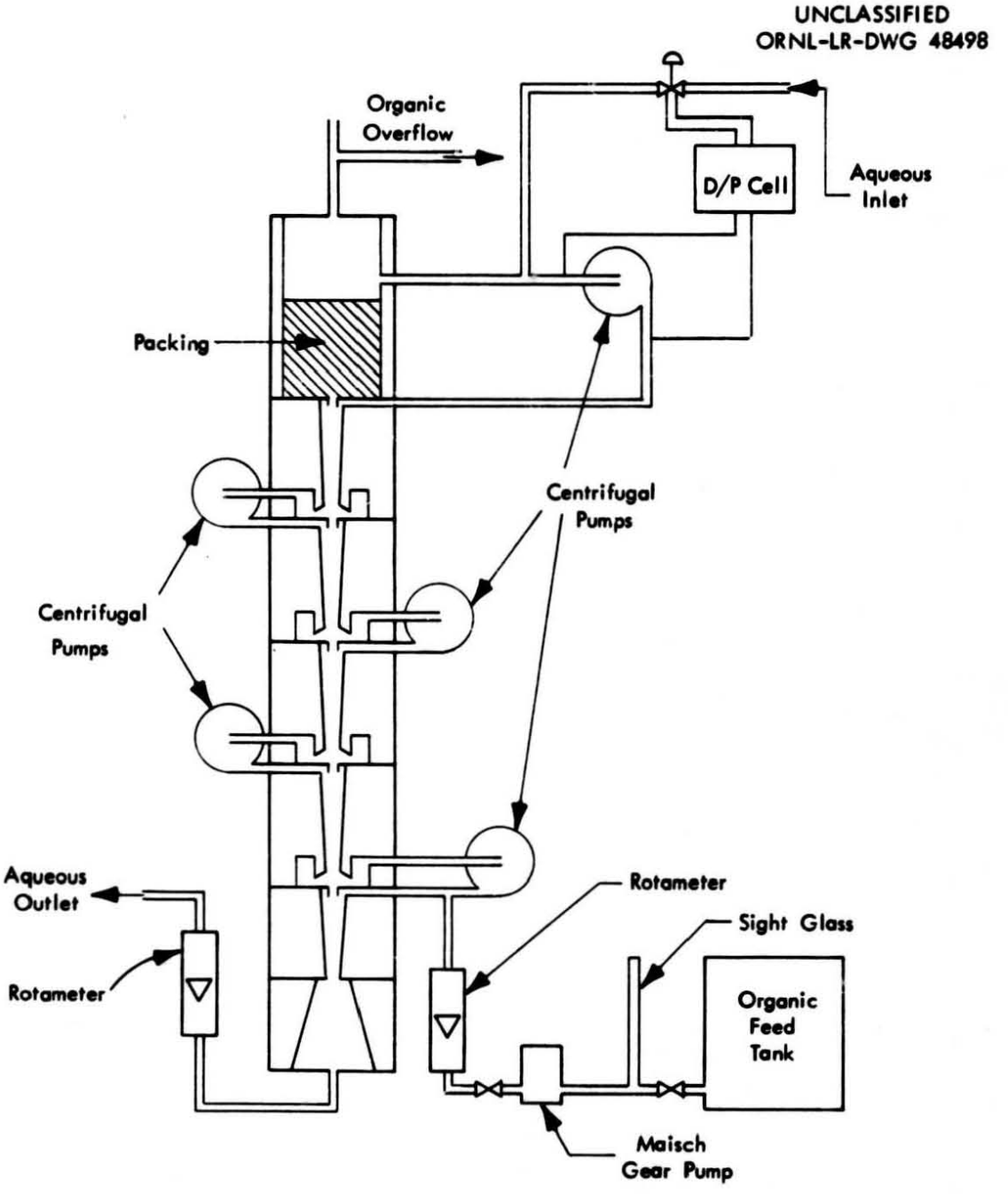

Fig. 1. Flow diagram of stacked clone contactor.

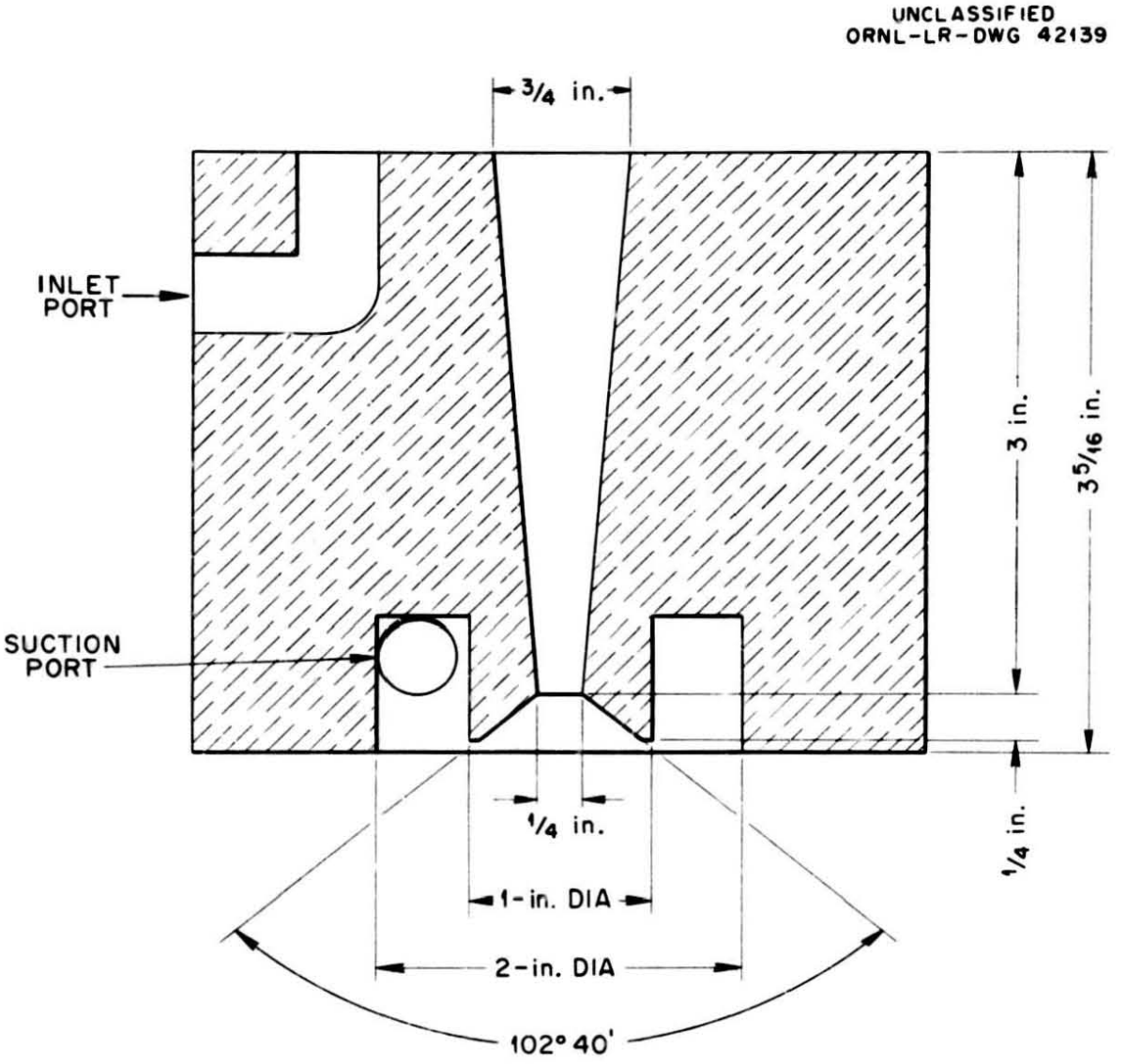

Fig. 2. Schematic cross section of one clone body of the stacked clone contactor.

UNCLASSIFIED
PHOTO 46852

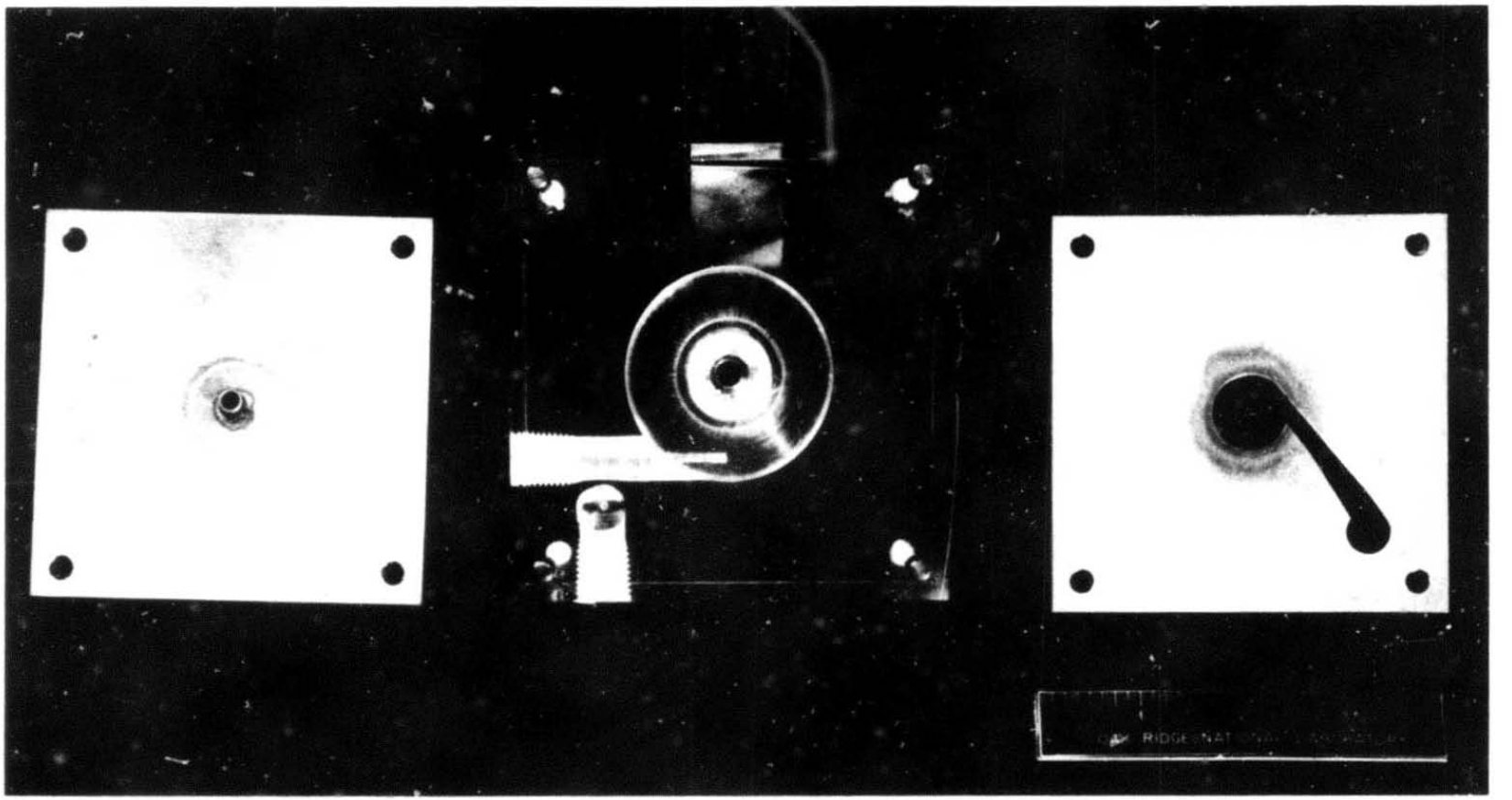

Fig. 3. Vortex finder, hydroclone body and feed plate.

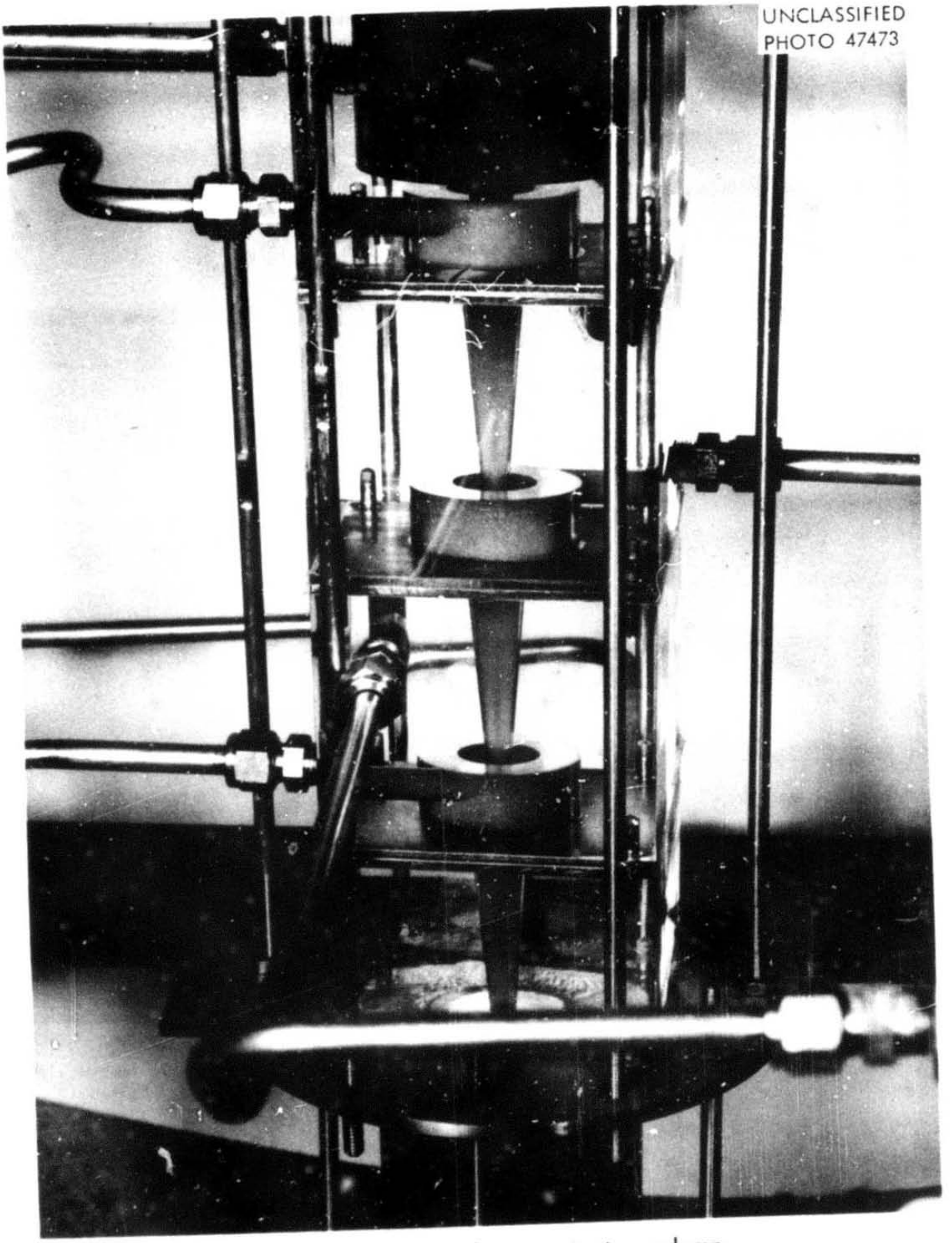

Fig. 4. Stacked clone contactor column.

UNCLASSIFIED
ORNL-LR-DWG 48499

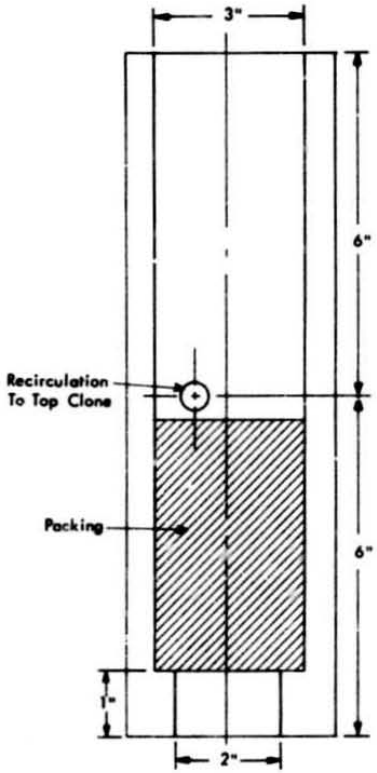

Top Section A

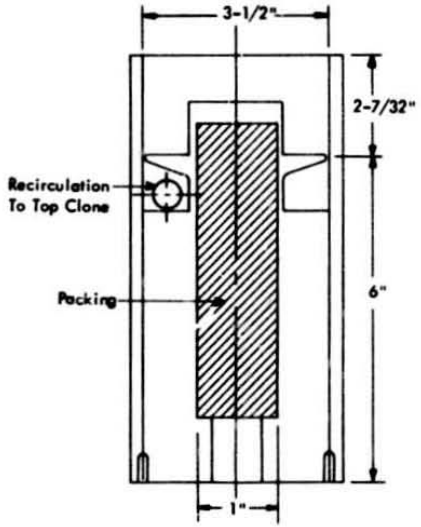

Top Section B

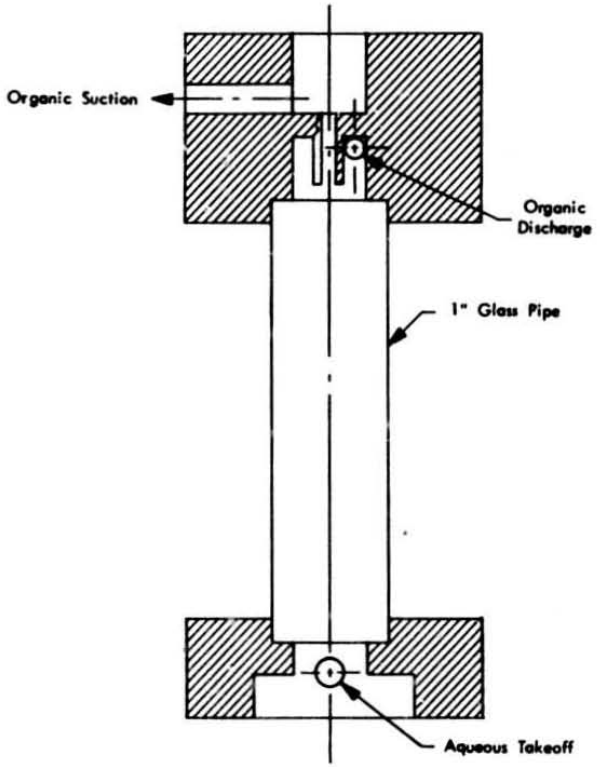

Top Section C

Fig. 5. Top section basic designs.

Top section A was used for flooding and holdup studies. This section provided a constant cross section in which interface drops could be conveniently measured to deduce solvent holdup. No flooding throughout the range of flooding-run flow rates were observed with this top section when Supersol was the solvent. However, this design deviates from the criterion that the holdup be small.

Section B was originally designed for use in the Mark II stacked clone contactor. Because of its smaller size, it was used on the Mark I contactor for extraction runs to decrease steady state time. With the Supersol system, no flooding of this top section was observed throughout the range of flow rates used in the extraction runs. However, when Amsco was used, a noticeably longer coalescence time was required, and the interface could not always be controlled below the organic overflow take-off. An extra 2 in. of settling section was required above this top section to prevent flooding by spilling some of the aqueous phase out of the organic take-off. Pieces of polyethylene tubing were used as packing. Passing the whole recirculated stream to the top clone through the packing in the top section aided in coalescense of the organic phase.

A pump-driven top section, section C, consisted of two Lucite blocks with ports and inlet and outlet taps connected by a 6-in.-long section of 1-in.-dia glass pipe. This disengaging section was to act as a cylindrical hydroclone with a clear organic phase circulating through the top Lucite block, an interface controlled in the glass pipe section, and an aqueous-rich-phase take-off at the bottom for recirculation to the top hydroclone. No stable operating point was found when Amsco was the solvent without some of the aqueous phase being taken off at the organic overflow. The recirculation rate of the stream in the top Lucite block was varied by throttling the pump line, but decreasing the circulation rate caused an even greater aqueous fraction to spill over the organic overflow.

An inverted cone centered below the bottom hydroclone served as the bottom section of the apparatus. During operation the organic phase became so finely dispersed that very small traces of solvent were carried out the aqueous take-off at the bottom of the column. Some of this solvent coalesced on the stainless steel rotameter float in the aqueous outlet line and necessitated using a stopwatch and graduated cylinder to obtain accurate flow rates. This difficulty could be eliminated by feeding the organic stream to the second hydroclone and using the bottom hydroclone as a clarification stage for the aqueous stream.

Preliminary flooding studies, extraction efficiencies, and flow rate--pressure drop data have been correlated.[2]

3.0 FLOODING DETERMINATIONS

A series of flooding experiments was conducted with Supersol as the organic and 0.08 M HNO_3 as the aqueous phase. These are summarized in Fig. 6, where flooding organic rate is plotted against flooding aqueous rate, and Fig. 7, a plot of log of flooding A/O (aqueous to organic flow rate ratio) vs flooding aqueous rate.

UNCLASSIFIED
ORNL-LR-DWG 43050

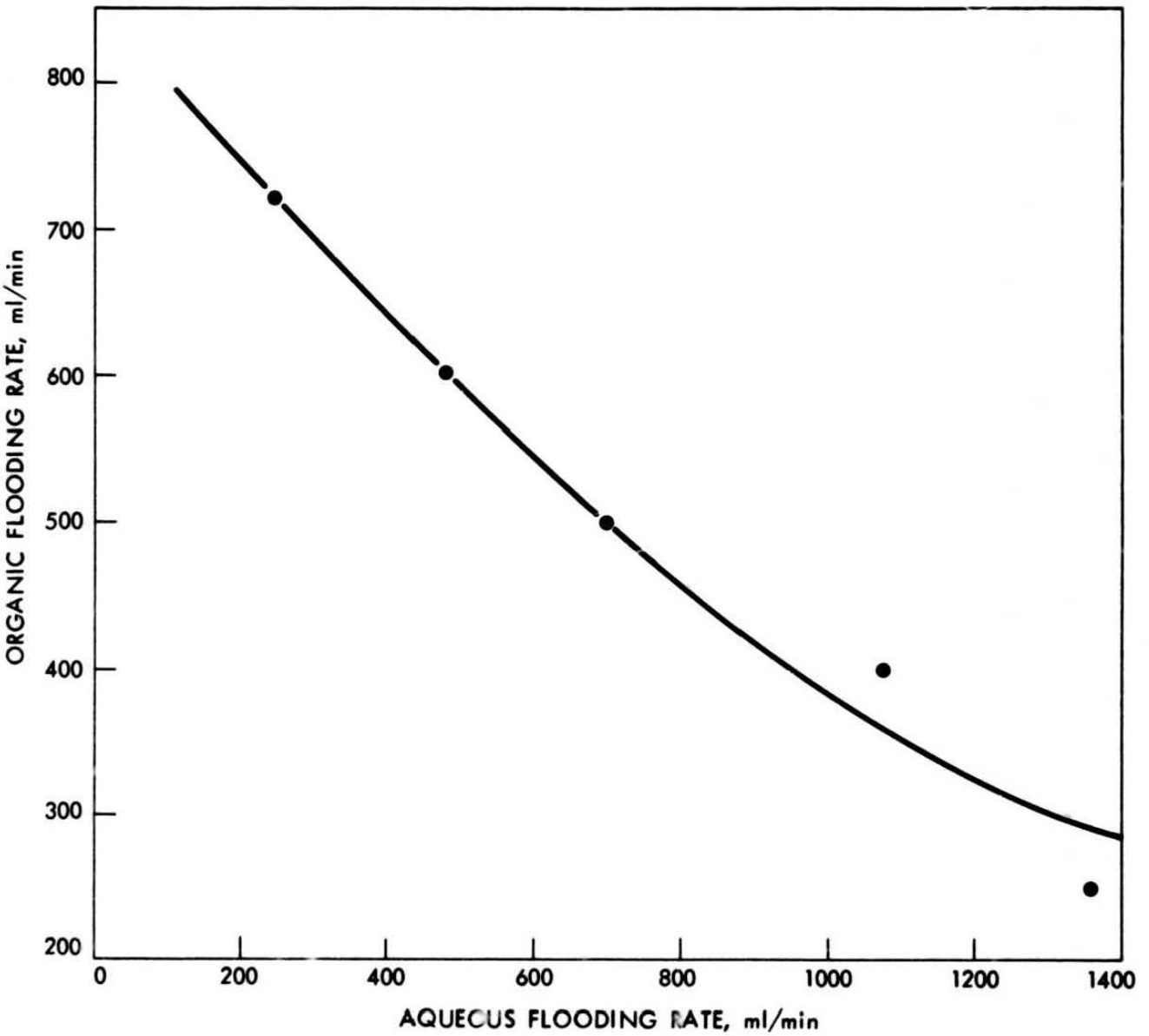

Fig. 6. Flooding organic flow rate vs aqueous flow rate for stacked clone contactor.

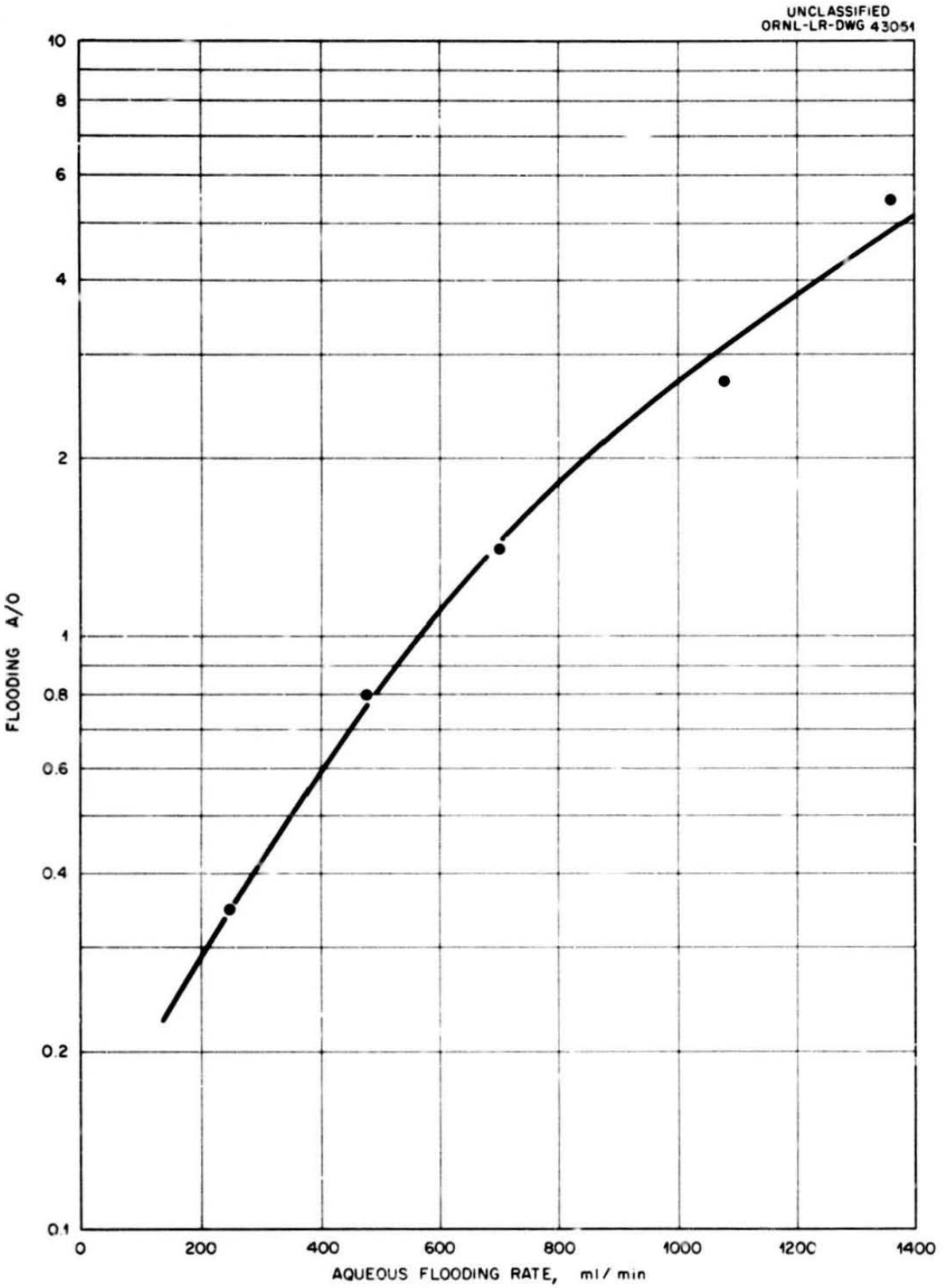

Fig. 7. Flooding A/O vs flooding aqueous flow rate for stacked clone contactor.

The flooding procedure was to increase the aqueous flow rate for a constant organic flow rate until flooding occurred. At organic flow rates of 500 ml/min or less flooding took place below the point of organic feed injection. Flooding aqueous rates here caused an appreciable amount of solvent to be carried out through the aqueous take-off. However, at organic flow rates greater than 500 ml/min flooding took place by a buildup of solvent in the underflow ports of the hydroclones. At an A/O of unity the total flooding throughput was 1.1 liters/min, which corresponds to a flow rate of 59,000 gsfh based on the 7/32-in. vortex finder diameter.

Flooding rates determined by this procedure were higher than those reported by Simms.[2] Simms' procedure was to fill the top section with the aqueous phase and the bottom with the organic phase, start the recirculation pumps, and determine the throughput by measuring rate of change of interface level in the end sections. Apparently throughput is maximum when the feed streams are pumped into the column rather than relying on the induced underflow effect to feed the streams to the cascade.

4.0 SOLVENT HOLDUP AND RETENTION TIME

Solvent holdup and retention time data were obtained for organic flow rates of 100 to 600 ml/min in 100-ml/min increments and aqueous flow rates from 0 to as high as 86% of flooding. The percentage of solvent in the hydroclone stages is plotted (Fig. 8). Average solvent retention time increased from 3.4 sec to 5.6 sec as the aqueous rate was increased from 0 to 900 ml/min (Fig. 9). For a given aqueous flow rate the effect of decreasing the organic rate is to increase the retention time slightly, but this effect becomes more pronounced at the organic flow rate of 100 ml/min.

Solvent holdup data were obtained by injecting the organic stream first into the bottom clone and operating the column countercurrently at constant flow rates for several minutes. Then all inlet and outlet streams were shut off simultaneously, and total solvent holdup was determined by measuring the resulting interface drop in the top section after all the solvent had moved up the column under the influence of the recirculation pumps. Next, the organic stream was injected into the top hydroclone, and the column was operated at the same flow rates. This time the interface drop was due to the solvent held up in the top hydroclone and top section. The difference between these two solvent holdup inventories gives the solvent holdup in four hydroclone stages. For the purpose of calculating the organic holdup volume as a per cent of the total volume it was necessary to measure the total volume of one clone stage consisting of Lucite clone, underflow chamber, pump and piping. This total volume was found to be 190 ml. The actual volume of the Lucite hydroclone and underflow chamber was only 40 ml, whereas the volume of the associated centrifugal pump and piping was 150 ml. Retention times were calculated by dividing the total solvent holdup per hydroclone stage by the organic flow rate. The holdup time would be smaller if the pump volume could be decreased. For example, if calculations were based upon the hydroclone volume alone, retention times would be only 21% of those reported in Fig. 9, assuming the same percentage of solvent was circulating in the pump as in the hydroclone.

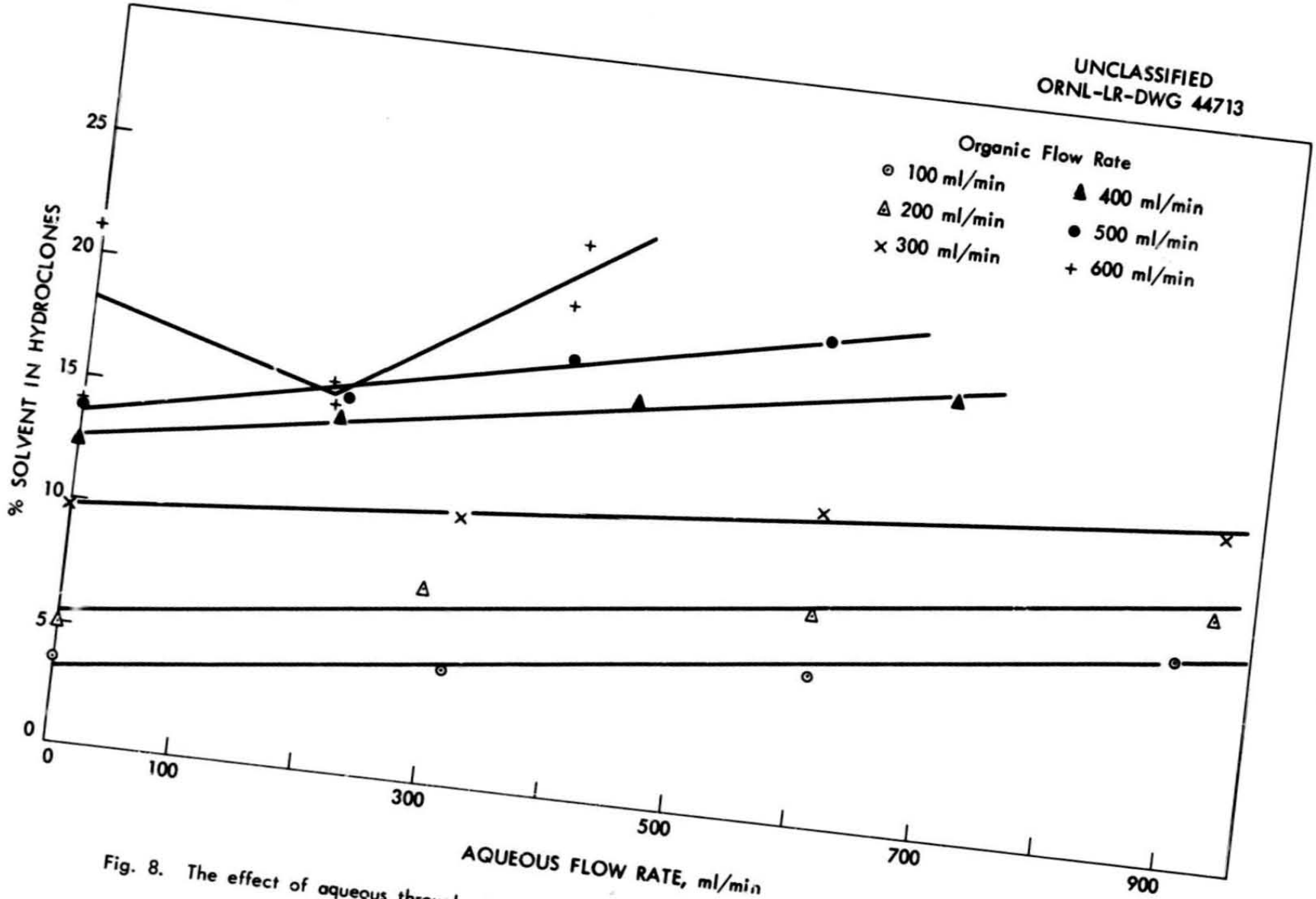

Fig. 8. The effect of aqueous throughput on the per cent holdup of organic in a stacked clone contactor stage.

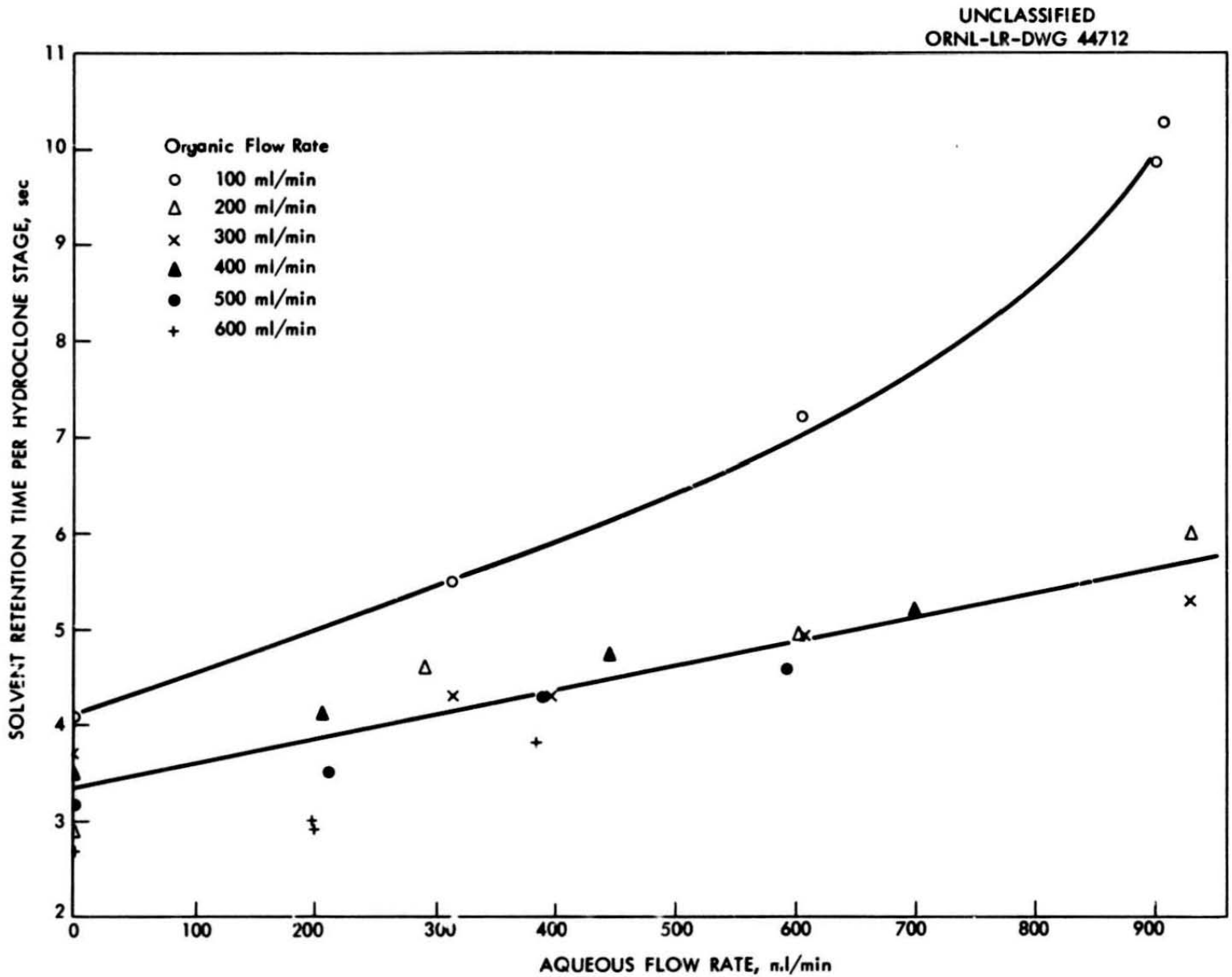

Fig. 9. The effect of aqueous throughput rate on organic retention time per stacked clone stage.

For these experiments the interface was controlled manually in top section A which had a constant 3-in. diameter.

5.0 EQUILIBRIUM FOR THE SYSTEM BENZOIC ACID-SUPERSOL-0.078 M HNO_3

The system benzoic acid-Supersol-0.078 M HNO_3 was used as an extraction system for evaluating the extraction efficiency of the stacked clone contactor. Dilute nitric acid is necessary to prevent emulsion formation in the contactor. The maximum allowable aqueous benzoic acid concentrations are limited by solubility, <0.03 M at room temperature. A procedure for the analysis of this system was developed by Kubota.[3] Benzoic acid in kerosene is determined by a potentiometric titration on an automatic titrator in a 1:4 methanol: acetone solvent. Aqueous samples are titrated potentiometrically first to the nitric acid end point. Then the benzoic acid titration is made on an expanded scale to increase accuracy.

Thirty-eight equilibrations were made in batch shakeup experiments, some at 31.5°C and others at 24°C. Within the scatter of the data, no temperature coefficient was observed. A log-log plot of the equilibrium data gave a line of slope ~2, reflecting the formation of a dimer in the organic phase. The organic benzoic acid concentration was then plotted against the square of the aqueous benzoic acid concentrations (Fig. 10). It was found that a curve of the form

$$Y = a_1X^2 + a_2X^4 \qquad (1)$$

would represent the plot of Fig. 10 better than a straight line. A least squares curve of this form was fitted to the data points, and the following equation was obtained

$$Y = (0.0924 \pm 0.0071)X^2 + (2.40 \pm 0.18) \times 10^{-6}X^4 \qquad (2)$$

where Y and X are, respectively, the benzoic acid concentrations in millimols per liter in the organic and aqueous phases. The standard deviation for this correlation was 7.65%.

The mechanism involved in this system can be represented by

$$2C_6H_5COOH\ aq \rightleftharpoons (C_6H_5COOH)_2\ org \qquad (3)$$

Applying the mass action law

$$K = \frac{[(C_6H_5COOH)_2\ org]}{[C_6H_5COOH\ aq]^2} \qquad (4)$$

where K is the equilibrium constant.

Since the organic phase was analyzed for total benzoic acid, the concentration of the dimer would be one half of that shown for each ordinate in Fig. 10. Therefore the constant K in eq. 4 is very nearly equal to $1/2\ a_1$ in eq. 1 because the least squares curve in Fig. 10 is almost linear. The value of K determined in this manner is 0.0462 liter/mmol.

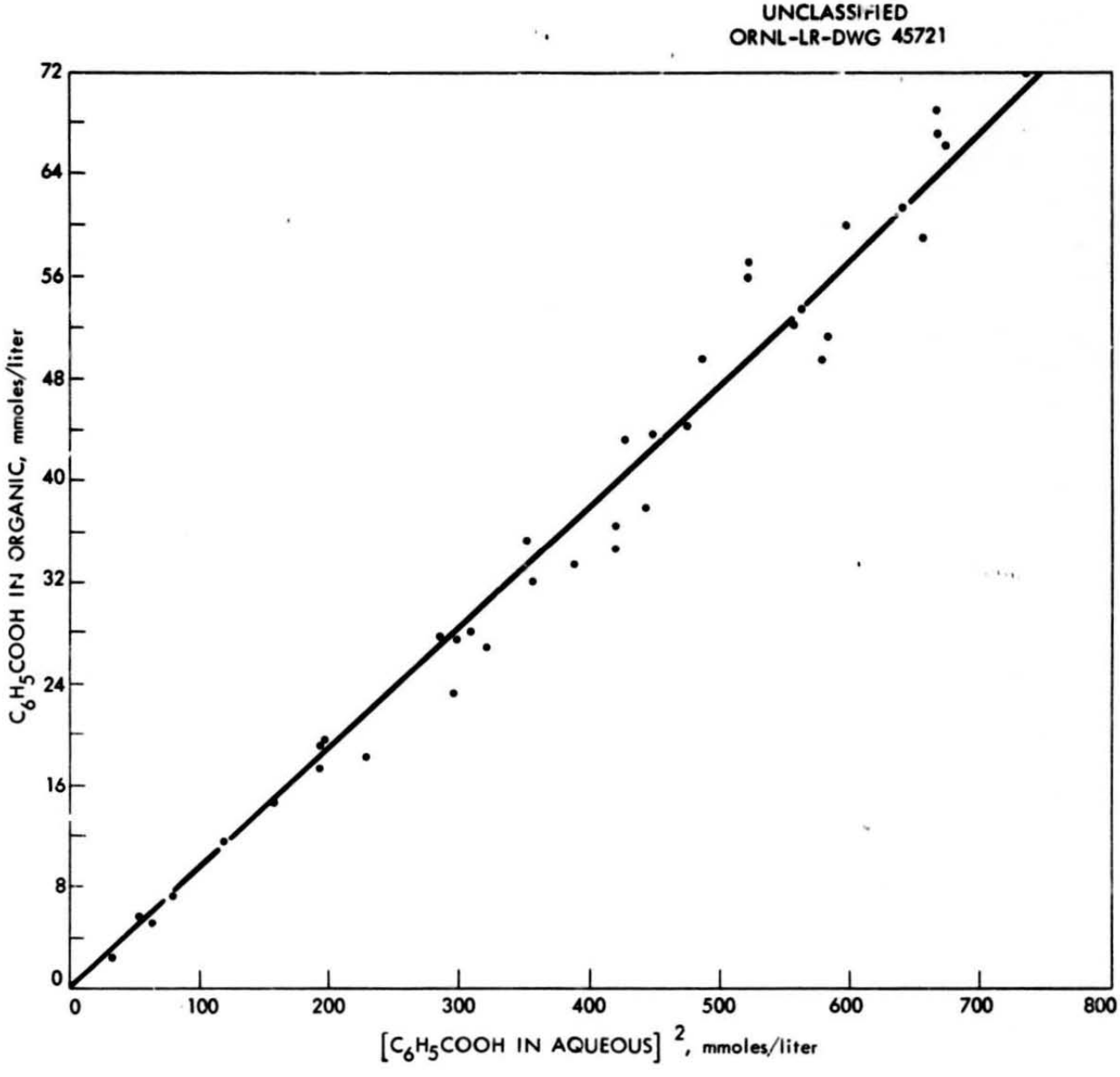

Fig. 10. Equilibrium: benzoic acid - super sol - 0.078 M HNO_3.

6.0 STAGE EFFICIENCIES

Fourteen extraction runs were completed with the system benzoic acid-0.078 M HNO_3-Supersol and three were made with Amsco. These data are summarized in Table 1. Figures 11, 12, and 13 show the operating lines in relation to the equilibrium line.

With the exception of run SCC-12, extraction runs were made with five mechanical hydroclone stages and a top section through which the stream recirculated to the top hydroclone was passed. Stage efficiencies were reported by subtracting one theoretical stage for the top section and its associated hydroclone from the total number of theoretical stages developed and dividing by the four remaining hydroclone stages expressed as per cent. Verification of assuming one theoretical separation in the top section and hydroclone was confirmed in run SCC-12 during which the organic and aqueous feed streams both were injected into the recirculation line to the top clone. Within analytical and experimental errors, the top section B and its hydroclone account for approximately theoretical stage.

Operating lines used to "step off" the theoretical stages were determined by analysis of end concentrations.

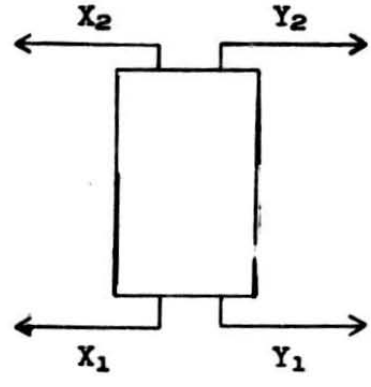

X = aq C_6H_5COOH conc, millimols per liter

Y = org C_6H_5COOH conc, millimols per liter

Slopes of the operating lines were

$$\frac{Y_2 - Y_1}{X_2 - X_1} \qquad (5)$$

This should be equivalent to the A/O used. Table 1 includes columns for the measured A/O's and those calculated from eq. 5.

Benzoic acid material balance calculations were reported as 100 x $OY_2 + AX_1/OY_1 + AX_2$ where A and O are, respectively, the measured aqueous and organic flow rates. Runs SCC-6, SCC-7, and SCC-8 were made with top section A (Fig. 5) and the interface was controlled manually by adjusting the aqueous inlet rate. The remainder of the runs used top section B, and the interface was controlled automatically by the D/P cell. An extra 2-in.-high settling section above the top section B was required in SCC-14 when Amsco was used. Steady-state operation was assumed to be reached after the total solvent

Table 1. Summary of Extraction Runs

Run No.	Solvent	Extracted from	A/O Measured	$\frac{Y_2-Y_1}{X_2-X_1}$	$\frac{100\ A/O}{(Y_2-Y_1)/(X_2-X_1)}$	Benzoic Acid Mat'l Bal., $\frac{\text{output}}{\text{input}} \times 100$	% of Flooding	Total No. of Theoretical Stages	Stage Efficiency, %	Flow Rates Aqueous A	cc/min Organic O
SCC-6	Supersol	Org to Aq	2.28	2.44	93	94	32	2.9	48	285	125
SCC-7	Supersol	Org to Aq	2.82	2.85	99	99	82	2.9	48	820	290
SCC-8	Supersol	Aq to Org	3.[illegible]	3.04	99	104	58	4.0	75	603	200
SCC-9-A	Supersol	Org to Aq	2.41	2.32	104	103	84	3.5	63	782	326
SCC-9-B	Supersol	Org to Aq	2.83	2.89	98	98	85	2.8	45	850	300
SCC-10-A	Supersol	Org to Aq	2.29	2.22	103	103	63	2.9	48	578	252
SCC-10-B	Supersol	Org to Aq	2.82	2.72	104	103	71	2.9	48	713	254
SCC-10-C	Supersol	Org to Aq	3.16	2.95	107	107	80	3.3	58	855	270
SCC-10-D	Supersol	Org to Aq	3.54	3.12	113	114	85	3.1	53	968	272
SCC-11-A	Supersol	Aq to Org	3.15	3.32	95	102	58	2.7	43	611	194
SCC-11-B	Supersol	Aq to Org	3.38	4.62	73	111	62	1.8	20	684	202
SCC-11-C	Supersol	Aq to Org	2.73	3.53	77	111	56	1.8	20	541	198
SCC-12-A	Supersol	Org to Aq	2.03	1.36	149	124	65	1.3	130[a]	534	263
SCC-12-B	Supersol	Org to Aq	2.42	1.84	132	118	76	1.2	130[a]	710	298
SCC-14-A	Amsco	Aq to Org	1.04	1.09	95	103	37[b]	2.1	28	215	207
SCC-14-B	Amsco	Aq to Org	1.88	2.29	86	104	50[b]	2.0	25	411	219
SCC-14-C	Amsco	Aq to Org	2.69	2.92	92	103	61[b]	2.4	35	600	224

[a]Assumes Amsco and Supersol flood at the same rates.

[b]Extraction with top section and one hydroclone only.

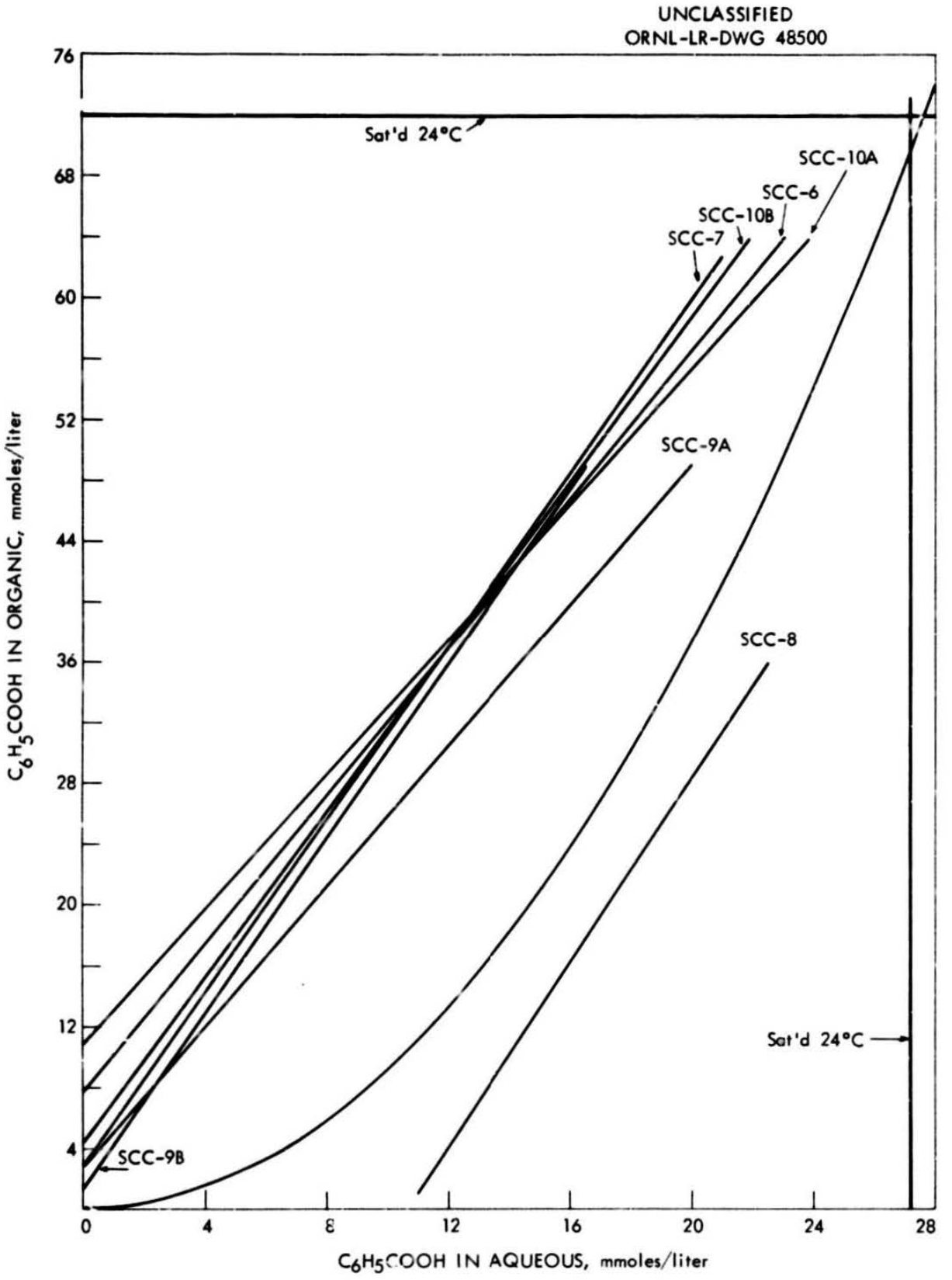

Fig. 11. Extraction runs SCC-6 through SCC-10B.

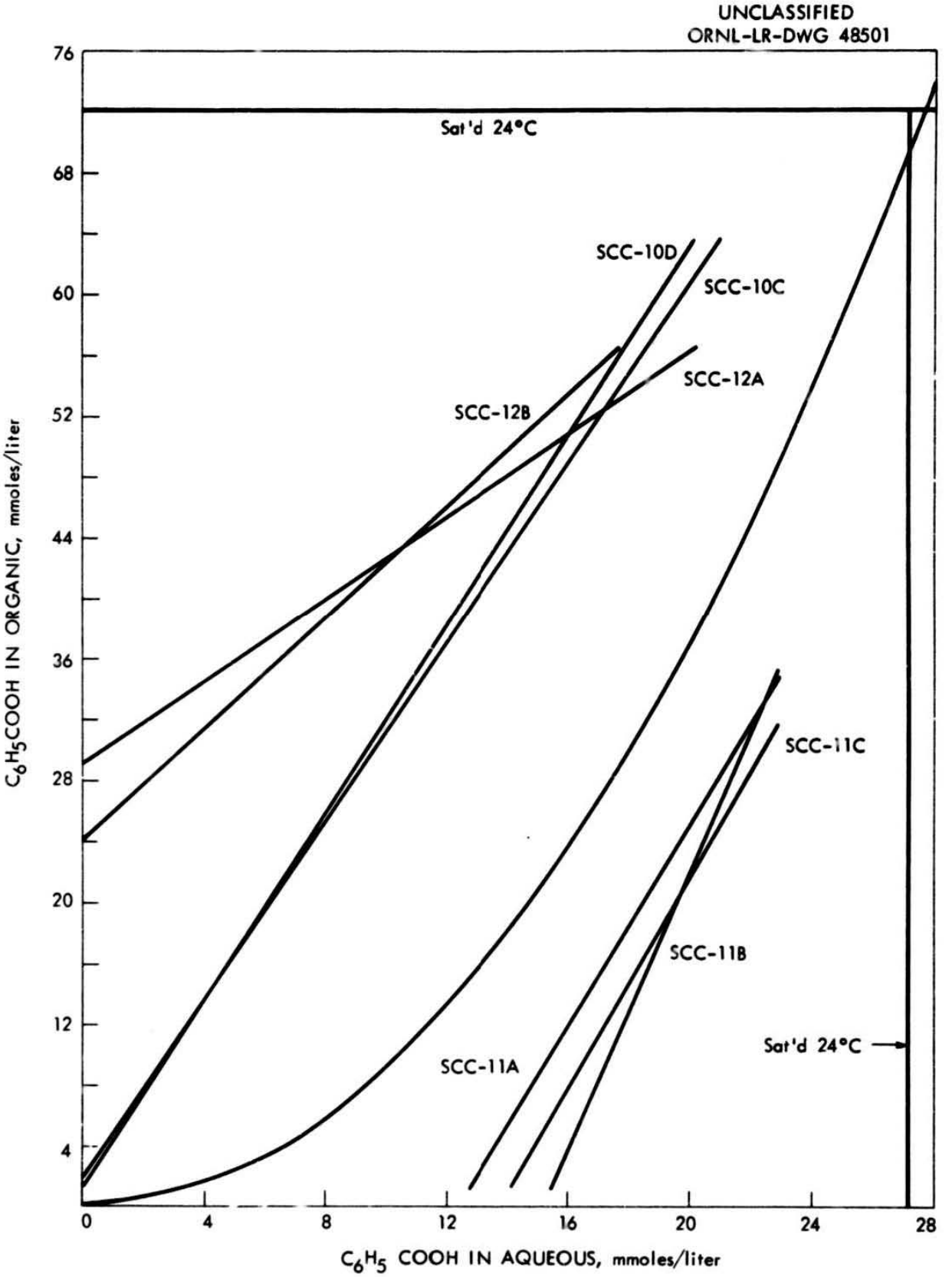

Fig. 12. Extraction runs SCC-10C through SCC-12B.

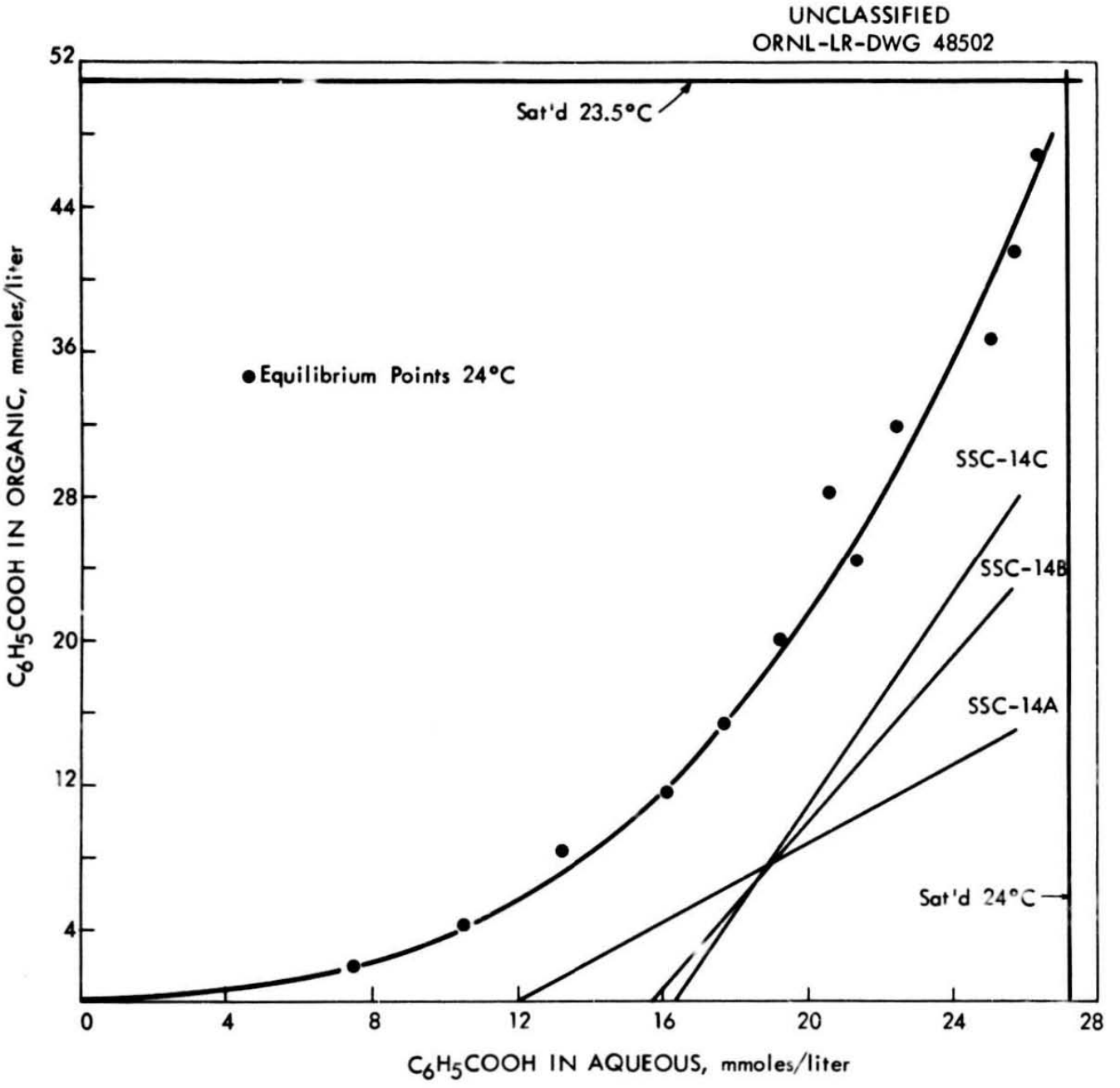

Fig. 13. Extraction runs SCC-14.

inventory had been replaced five times. Relatively constant stream concentrations with time and good material balances indicate that this is a reasonable assumption. Based on this criterion, at an A/O of 2.0, using top section B, steady-state time is 10 min at 85% flooding.

7.0 PROPOSED PROGRAM

A Mark II stacked clone contactor has been constructed from Lucite. The basic design changes in the hydroclone sections include an overall decrease in length from 3 in. to 2 in., an increase in the top diameter from 3/4 in. to 1.5 in., and an increase in the bottom diameter from 1/4 in. to 0.35 in. A 3/4-in.-thick block was machined from Lucite to serve as both a feed plate and vortex finder in the Mark II contactor.

In order to compare the Mark I and Mark II designs upon the same basis, flooding and solvent holdup characteristics should be redetermined in the Mark I contactor with the solvent Amsco. Similarly, extraction runs in the Mark I will be extended with the Amsco system and the equilibria will be accurately determined for Amsco. It has been suggested that the contactor be evaluated by operating with a uranium system and a standard Purex flowsheet. In preliminary corrosion tests with 30% TBP--Amsco and acid uranium solvent (323 g of uranium per liter, 1.76 M (free) nitric acid) Lucite underwent no gross change. More extensive and quantitative corrosion tests are being conducted.

Theoretical stage calculations, material balances, etc. can be calculated accurately and rapidly by the Oracle. A code is being prepared for the Oracle so that analytical data from extraction run samples can be fed directly into the computer and calculations such as those tabulated in Table 1 computed by the machine.

8.0 REFERENCES

1. W. E. Dunn and W. M. Woods, "Stacked Clone Contactor," Unit Operations Monthly Progress Report, December 1959, internal memo, CF 59-12-49.

2. R. Simms, "High Speed Contactor," CF 59-10-136, Oct. 8, 1959.

3. H. Kubota, "Analytical Chemistry Division Annual Progress Report for Period Ending 12/31/59," ORNL-2866.

END