[redacted]

ORNL
MASTER COPY 18

ORNL-3434 Gcl
C-44b – Nuclear Technology – Chemistry
and Chemical Engineering
M-3679 (30th ed.)

AEC RESEARCH AND DEVELOPMENT REPORT

RECOVERY OF URANIUM FROM GRAPHITE FUELS BY OXIDATION AND FLUORINATION

PART I. DESIGN AND INITIAL OPERATION OF ENGINEERING-SCALE APPARATUS FOR ROVER FUEL

Title Unclassified – Per Jack Kahn – AEC Declass Branch 7-17-64

L. E. McNeese
C. D. Scott

[redacted]

SPECIAL REVIEW FINAL DETERMINATION
CLASS. U AUTH.
REVIEWERS/VERIFIERS CLASS. DATE
(1) [signature] U 7/2/80
(2) [signature] U 6/13/80

OAK RIDGE NATIONAL LABORATORY
operated by
UNION CARBIDE CORPORATION
for the
U.S. ATOMIC ENERGY COMMISSION

GROUP 1
Excluded from automatic downgrading and declassification

[redacted]

[redacted]

LEGAL NOTICE

This report was prepared as an account of Government sponsored work. Neither the United States, nor the Commission, nor any person acting on behalf of the Commission:

A. Makes any warranty or representation, expressed or implied, with respect to the accuracy, completeness, or usefulness of the information contained in this report, or that the use of any information, apparatus, method, or process disclosed in this report may not infringe privately owned rights; or

B. Assumes any liabilities with respect to the use of, or for damages resulting from the use of any information, apparatus, method, or process disclosed in this report.

As used in the above, "person acting on behalf of the Commission" includes any employee or contractor of the Commission, or employee of such contractor, to the extent that such employee or contractor of the Commission, or employee of such contractor prepares, disseminates, or provides access to, any information pursuant to his employment or contract with the Commission, or his employment with such contractor.

[redacted]

ORNL-3434

Contract No. W-7405-eng-26

CHEMICAL TECHNOLOGY DIVISION

Unit Operations Section

RECOVERY OF URANIUM FROM GRAPHITE FUELS BY OXIDATION AND FLUORINATION
PART I. DESIGN AND INITIAL OPERATION OF ENGINEERING-SCALE APPARATUS FOR ROVER FUEL

L. E. McNeese
C. D. Scott

Date Issued

OCT 23 1963

CLASSIFICATION CANCELLED
authority CL Marshall - DOE
4-4-73
DATE AUG 24 1973
H F McDuffie
CLASSIFICATION OFFICER
OAK RIDGE NATIONAL LABORATORY
AUTHORITY DELEGATED BY AEC 7-19-71
8/10/73

OAK RIDGE NATIONAL LABORATORY
Oak Ridge, Tennessee
operated by
UNION CARBIDE CORPORATION
for the
U.S. ATOMIC ENERGY COMMISSION

[redacted]

[redacted] bited.

GROUP 1
Excluded from automatic
downgrading and
declassification

[redacted]

[redacted]

[redacted]

[redacted]

[redacted]

[redacted]

CONTENTS

Page

Abstract 1

1. Introduction 1

2. Oxidation-Fluorination Process 2

2.1 Brief Discussion of the Flowsheet 3

2.2 Description of the Fuel 5

3. Experimental Results 5

3.1 Oxidation Characteristics and Oxygen Feed Data 5

3.2 Nature of the Ash and Solids from the Off-Gas 6

3.3 Temperatures of the Fuel Rods During Oxidation 19

3.4 Results of the Fluorination Step 19

3.5 Separation of Uranium Hexafluoride from Niobium Pentafluoride 21

4. Description of the Apparatus and the Kiwi-B-1B Fuel Elements . 27

4.1 Design Criteria for the Oxidation-Fluorination Apparatus 27

4.2 Development and Design of Instruments 29

4.3 Design of Components of the Oxidation-Fluorination Apparatus 32

4.4 Description of the Kiwi-B-1B Fuel Elements 38

5. Operating Procedures 38

5.1 Oxidation Step 38

5.2 Fluorination Step 38

6. Conclusions and Recommendations 42

6.1 Conclusions 42

6.2 Recommendations 42

7. References 43

8. Appendix: Engineering Flowsheet 43

[redacted]

[redacted]

[redacted]

[redacted]

RECOVERY OF URANIUM FROM GRAPHITE FUELS BY OXIDATION AND FLUORINATION

PART I. DESIGN AND INITIAL OPERATION OF ENGINEERING-SCALE APPARATUS FOR ROVER FUEL

L. E. McNeese C. D. Scott

ABSTRACT

The recovery of uranium from graphite-uranium carbide fuels, such as the Kiwi type used in the Rover project, by oxidation with oxygen or air and subsequent direct fluorination of the ash by elemental fluorine is being investigated on an engineering scale. Accordingly, a small, engineering-scale, experimental facility was designed, built, and operated. The first six tests, made with a 2-1/2-in.-diam reactor containing 5 to 7 prototype Kiwi-B-1B-type fuel rods up to 18 in. in length, indicated process feasibility on this scale for oxidation by air or oxygen and fluorination by elemental fluorine.

Uranium recovery from the fuel of more than 99.9% was demonstrated, and the reaction temperature and the carbon monoxide content of the reactor effluent were kept within safe limits. The oxidation ash remained in place in the reaction vessel, thus making it possible to perform this two-step process in one vessel. Oxygen utilization up to 45%, and fluorine utilization up to 60% were demonstrated. Separation of the volatile uranium fluoride product from other volatile fluorides was also demonstrated.

---

1. INTRODUCTION

Rover project fuels and similar fuels consist of dispersions of uranium carbide particles in a graphite matrix. In some Rover fuels, the individual uranium carbide particles are coated with pyrolytic carbon, and cooling channels within the fuel rods are coated with niobium carbide. Presence of the pyrolytic carbon coating and the niobium carbide liner makes aqueous processing very difficult. A proposed processing scheme for the recovery of the uranium from such graphite-uranium carbide fuels consists basically in oxidation of the graphite and uranium carbide by oxygen and fluorination of the oxide residue or ash by elemental fluorine, with subsequent purification of the resulting UF_6.[1] Preliminary experimental work previously reported[2,3] and the work described in this report show that this process is feasible.

[redacted]

The first step in this two-step scheme for recovering the uranium and possibly the niobium from Rover fuel elements consists of oxidation of the graphite matrix and the uranium and niobium carbides to produce carbon dioxide and the oxides of uranium and niobium. Fission products in the fuel will also be oxidized, and the less volatile will remain in the ash with the oxides of uranium and niobium.

The second step of the process consists of fluorinating the ash with elemental fluorine, which produces volatile uranium hexafluoride and niobium pentafluoride, along with some volatile fission product fluorides. The purification of this contaminated uranium hexafluoride will be by selective sorption on beds of sodium fluoride or by distillation, and it has been reported elsewhere.[1] Preliminary work reported below has shown it to be feasible[2,3] for this type of fuel.

The process described here may be generally applicable to other graphite-matrix fuel elements because of the directness of the approach and because of the well-established technology with respect to oxidation, fluorination, and the separation of uranium from fission products and other chemicals.

It is the purpose of this report to present the first work on the recovery of uranium from spent Rover fuel elements. This series of reports will have the same main title, Recovery of Uranium from Graphite Fuels by Oxidation and Fluorination, with appropriate subtitles, each denoting some phase of progress.

This first report presents the design and initial operation of a small, engineering-scale experimental apparatus for the study and evaluation of the oxidation-fluorination process (using elemental oxygen or air and fluorine) for the recovery of the uranium from prototype, unirradiated Kiwi-B-1B fuel. The experimental problems encountered are discussed, and methods for solving them, as well as alternative procedures, are presented. The report has the following pattern: first, the oxidation-fluorination process is described, including a brief discussion of the flowsheet, the apparatus, and a description of the fuel. Then the results of such variables as the oxidation characteristics, oxygen feed data, the nature of the oxidation ash, temperatures of the fuel elements during oxidation, and results of the fluorination step are given. That is followed by a fuller description of the equipment—the design criteria, the development and design of the instruments, etc. The operating procedures for each of the two steps (oxidation and fluorination) are described, and that is followed by the conclusions and recommendations. An engineering flowsheet will be found in the Appendix.

2. OXIDATION-FLUORINATION PROCESS

Typical graphite-matrix fuels may be characterized as graphite containing a few percent of other materials, usually metal carbides. In the case of the Kiwi fuel, carbides of uranium, niobium and traces of other metals such as iron are present. With respect to high-temperature

burning in an oxygen-bearing gas, these fuels are comparable to charcoal or coal having a high ash content; in this case, the ash consists largely of the oxides of uranium and niobium.

The process flowsheet for the oxidation-fluorination method must include provision for the primary operations of oxidation and fluorination of the fuel and provisions for handling the off-gases from the two steps of the process. The off-gas from the first step will include combustion products, oxygen, diluent gases, and possibly particulate matter containing fission products. The UF_6 product must be separated from the off-gas of the second step of the process which will consist of volatile fluorides (NbF_5 and fluorides of certain fission products) and other gases, which include oxygen, diluent gases, and unused fluorine. Cleanup of the final off-gas streams prior to their release to the atmosphere is also required.

2.1 Brief Discussion of the Flowsheet

To accomplish the two major processing steps, oxidation of the fuel and subsequent fluorination of the resultant ash, the reaction vessel must have provisions for an oxygen supply and a fluorine supply as well as adequate heating and cooling to provide temperature control during the reactions (Fig. 1). An inert gas supply to the reaction vessel is necessary in order to enable control of both the temperature and the concentration of carbon monoxide.

The off-gas equipment must include provisions for cleaning up the oxidation-reaction effluent prior to release to the atmosphere and for removing the resulting volatile metal fluorides and fluorine from the effluent gas stream during fluorination of the ash. The final separation of the UF_6 from other volatile metal fluorides is also necessary in order to provide a decontaminated product.

In the present engineering-scale experiment, in which unirradiated, uncoated fuels are being used, the oxidation effluent can be cleaned sufficiently by filtration because there are no fission products in the fuel. (When processing irradiated fuel, an aqueous scrubber may be necessary for the removal of fission products.) During the fluorination step, the volatile uranium and niobium fluorides in the effluent can be removed from the gas stream by sorption on a fixed bed of NaF. A bed at 400°C will retain some of the metal fluorides such as NbF_5, but not UF_6, thereby allowing separation of the two prominent volatile fluorides.

Fluorine can be removed from the effluent by a fixed bed of soda-lime, although several commonly used alternatives are available for large-scale operation.

The engineering-scale experimental apparatus for the oxidation-fluorination process was designed and installed in Building 3592 at

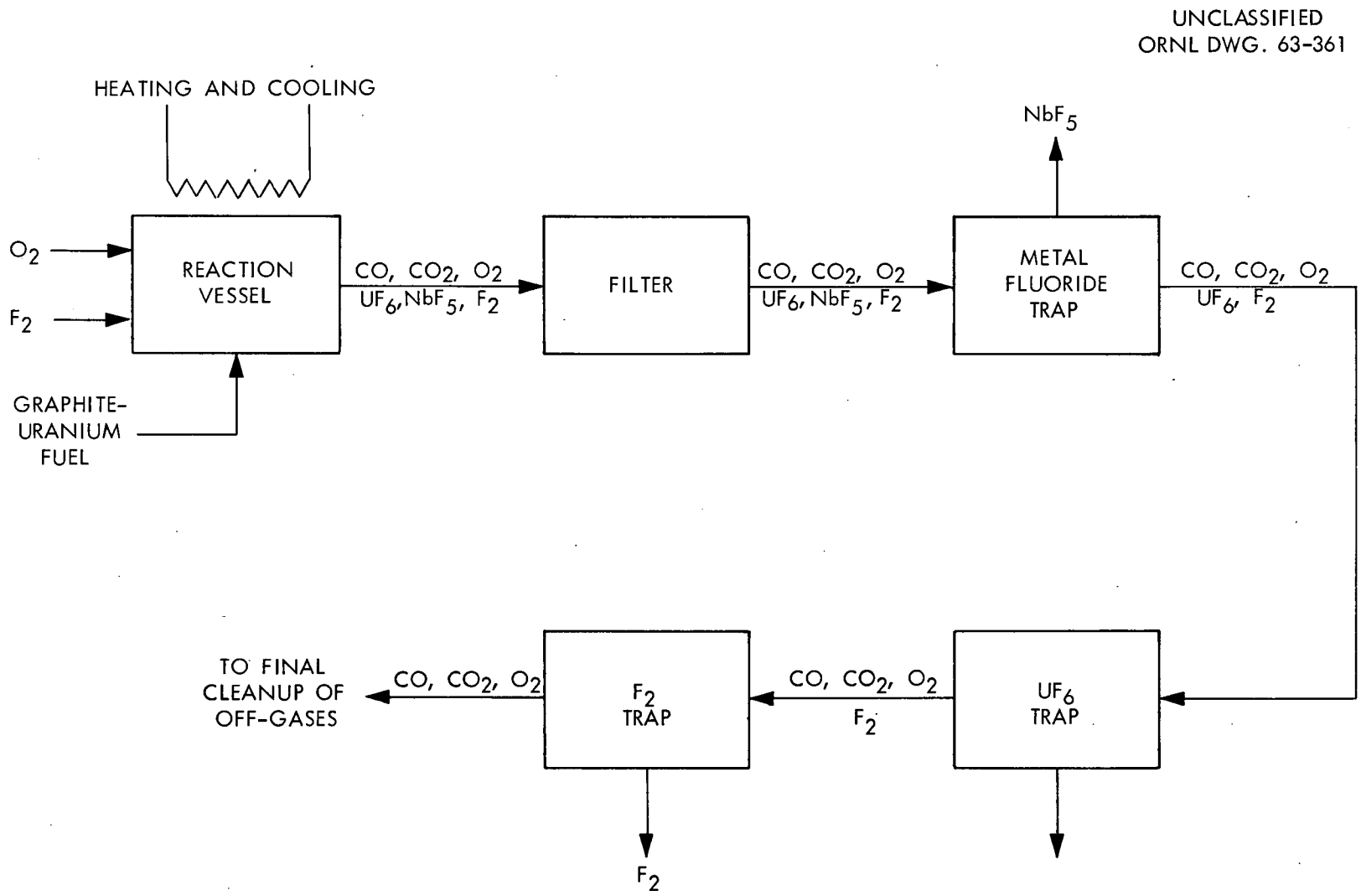

Fig. 1. Process Flowsheet for Recovery of Uranium from Prototype Kiwi-B-1B Fuel, a Graphite-Uranium Carbide Fuel.

Oak Ridge National Laboratory. The equipment was designed for the purpose of studying the two-step process on a small engineering scale (reactor volume of about 1 liter); however, it included the necessary process components and controls necessary to investigate all of the operating parameters.

2.2 Description of the Fuel

The graphite-uranium carbide fuel used in this experimental program consisted of lengths of prototype Kiwi-B-1B fuel rods. The rods included depleted uranium to simulate the anticipated uranium content, and the other constituents were similar to those in actual fuel rods. The fuel was vertically arrayed in the heated section of the reaction vessel in lengths of 8-1/3 in. to 12-1/2 in.

3. EXPERIMENTAL RESULTS

Six complete oxidation-fluorination runs with unirradiated Kiwi-B-1B prototype fuel containing depleted uranium were made. The oxidation, fluorination, and separation steps of the process were studied.

Fuel-charge data are given in Table 1. All tests were made with either five or seven sections of fuel rod. The charge weight varied from about 500 to about 1450 g, and the corresponding weights of uranium were 88 and 252 g.

3.1 Oxidation Characteristics and Oxygen Feed Data

The data for the oxidation runs is summarized in Table 2. The

Table 1. Fuel-Charge Data

Run	No. Rods	Rod Length (in.)	Charge Weight (g)	Wt U (g)	Wt Nb (g)	Wt C (g)
1	5	9	503.6	87.9	35.9	379.8
2	5	9	512.8	89.7	36.8	386.3
3	5	9	510.7	89.6	36.1	385.0
4	5	9	516.7	89.9	39.4	378.4
5	7	9	723.5	126.0	53.9	543.6
6	7	18	1446.7	251.7	107.3	1087.7

Table 2. Oxidation

Run	Time Required (hr)	Av. O_2 Utilization (%)	Max. CO in Off-Gas (mole %)	Max. Wall Temp. (°C)	Carbon Balance	Nature of Ash
1	2	25.0	1.5	750	97.5	Intact
2	2	37.1	2.1	750	99.3	Intact
3	2	44.2	3.5	750	98.4	Intact
4	3	20.7	<0.1	900	99.6	Powder
5	2	40.9	<3[a]	1100	116.5	Partially intact
6	4	46.6	<3[a]	900	85.6	Partially intact

[a]CO content was not known during some periods due to malfunction of monitor.

oxidation step required 2 to 3 hr for completion in all cases. Average oxygen utilization varied from 20% to 45%. Maximum carbon monoxide concentrations in the runs ranged from 0.1 to 3.5 mole %, which is well below the explosive limit (12.5 mole % CO). Maximum wall temperatures were below 900°C in all runs except in run 5, where the fuel charge dropped down into the uncooled section of the reactor because the grate had been destroyed early in the run.

A carbon material balance was made on each oxidation test. This was determined from off-gas composition, reactor feed rate, and initial carbon in the feed. In the first four tests, the carbon balance was within 2%. The close balances indicate reliable off-gas analyses and accurate feed-gas data. Balances for the remaining two runs were in error due to malfunction of monitoring equipment for the effluent gases.

Gas feed rate, effluent composition, oxidation rate, and oxygen utilization are shown in Figs. 2 through 13.

3.2 Nature of the Ash and Solids from the Off-Gas

In all runs except run 4, the ash was either totally or partially intact; that is to say, the ash retained the shape of the original rods. The powdered ash from run 4 was believed to have resulted from the low oxidation rate; hence the low temperature of the ash during the run. The weight of solids on the off-gas filter was highly dependent on the nature of the ash. For intact ash, less than 0.1 g of solids were collected on the filter, while with powdered or partially intact ash, about 30 g were collected.

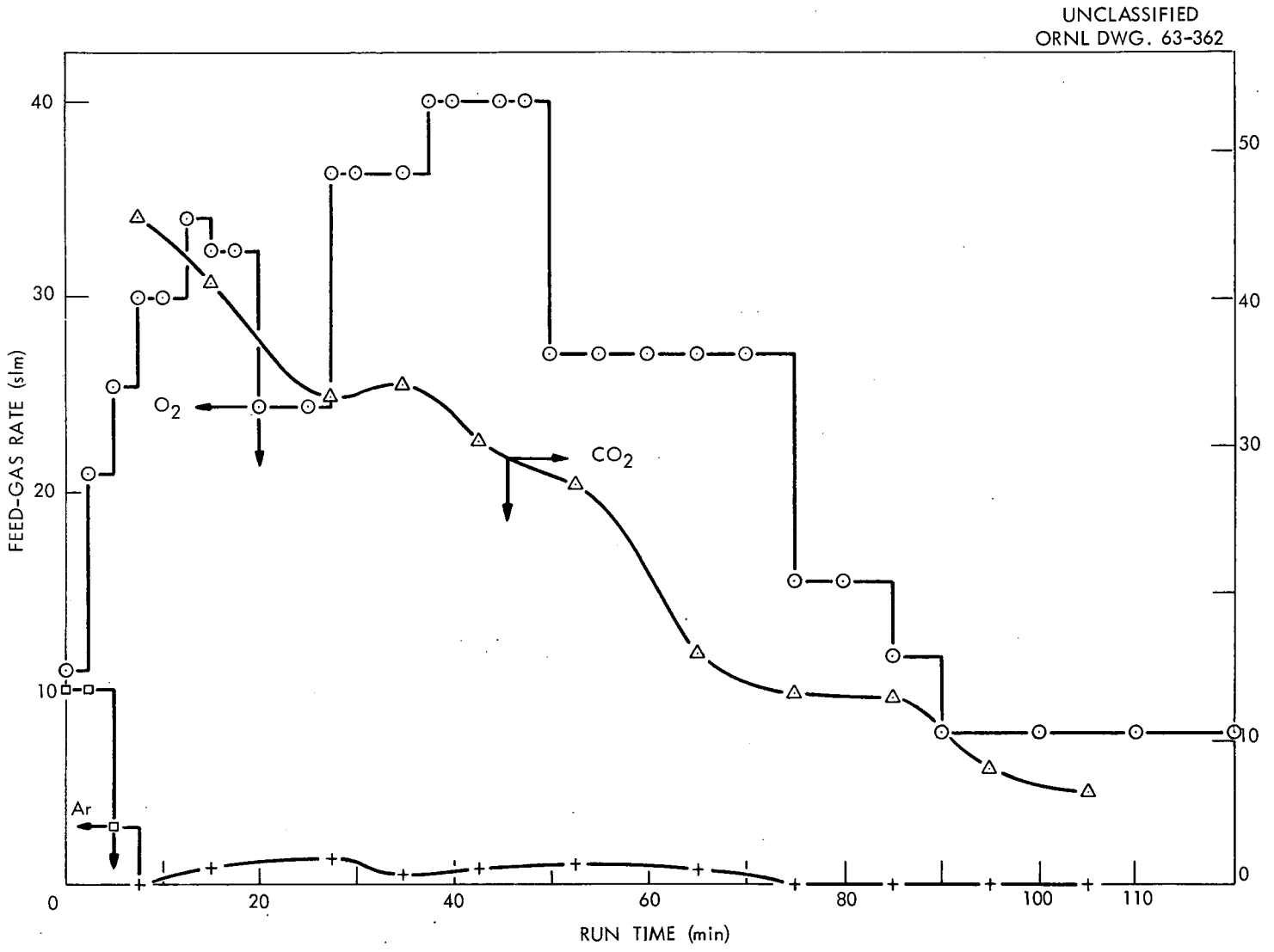

Fig. 2. Feed Rates and Effluent Composition During Run 1.

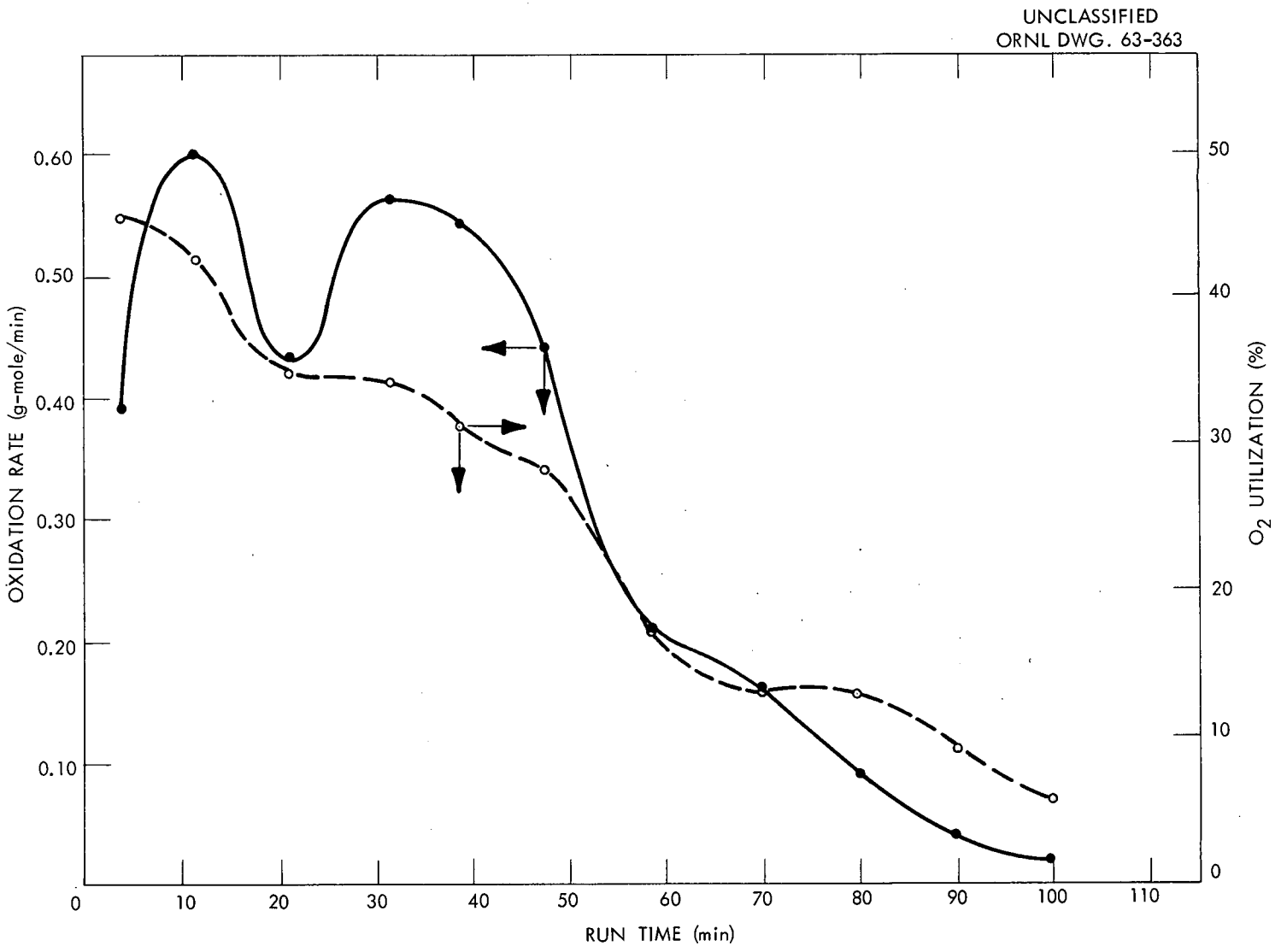

Fig. 3. Oxidation Rate and Oxygen Utilization During Run 1.

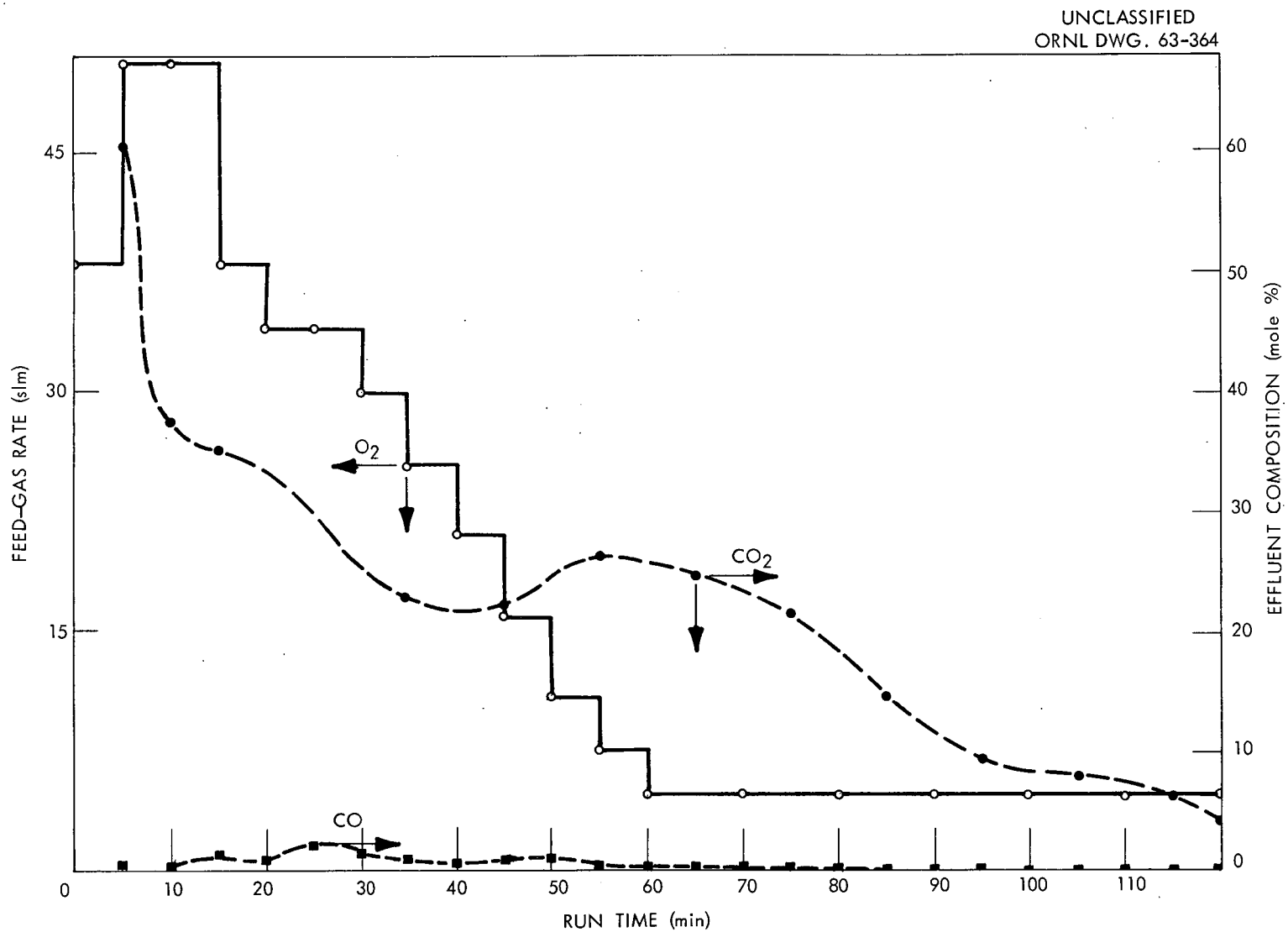

Fig. 4. Feed Rates and Effluent Composition During Run 0-2.

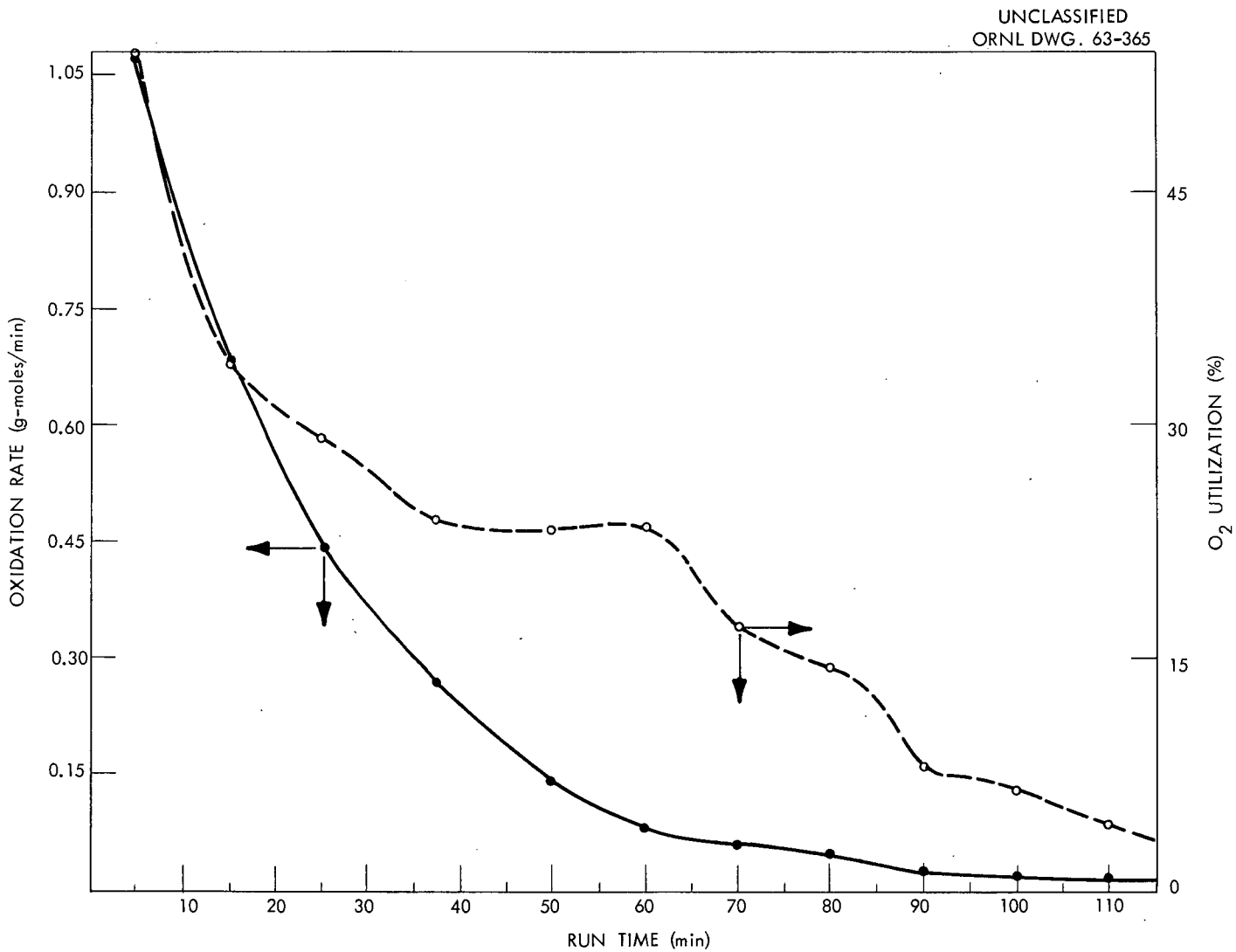

Fig. 5. Oxidation Rate and Oxygen Utilization During Run O-2.

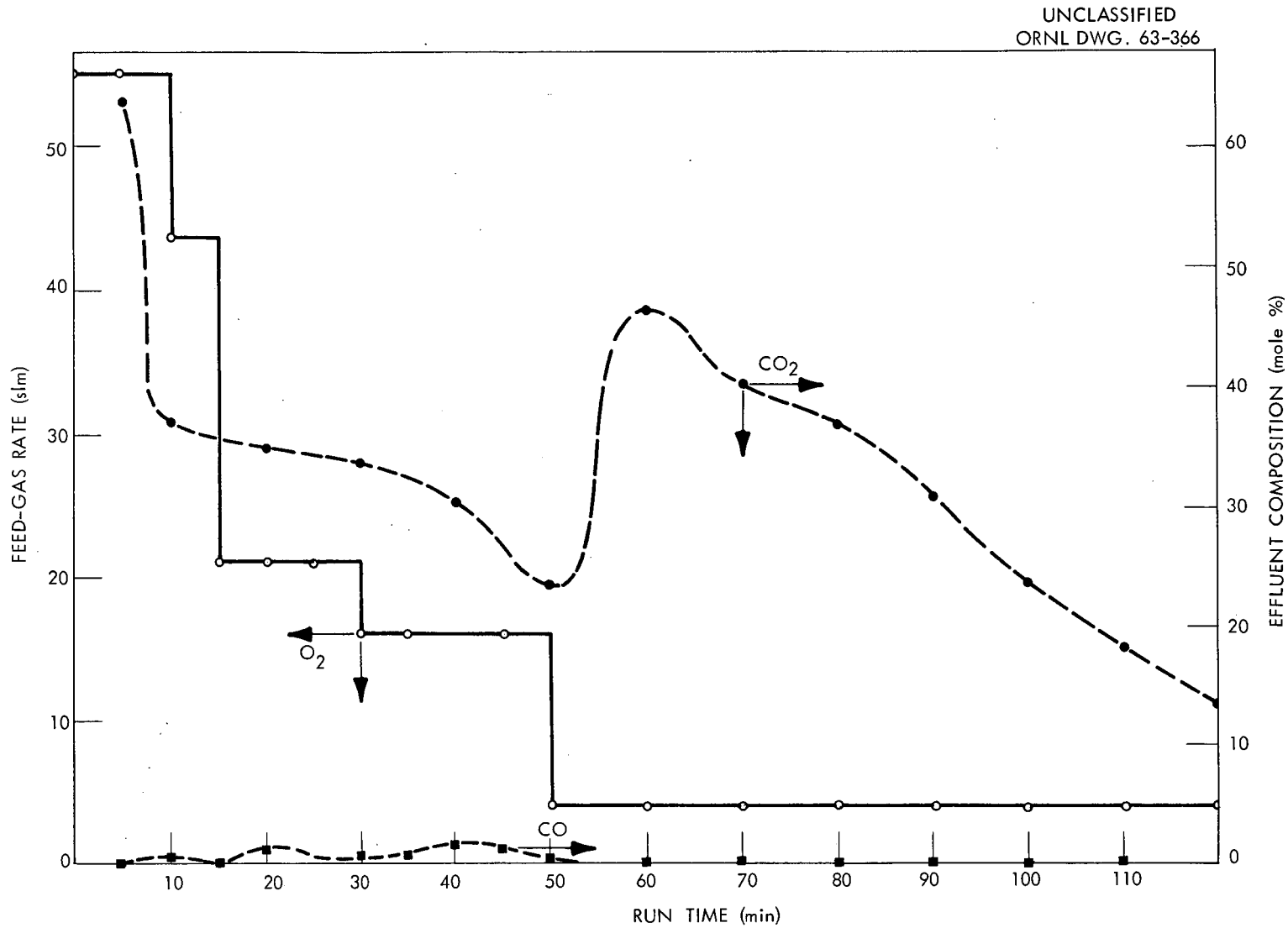

Fig. 6. Feed Rates and Effluent Composition During Run 0-3.

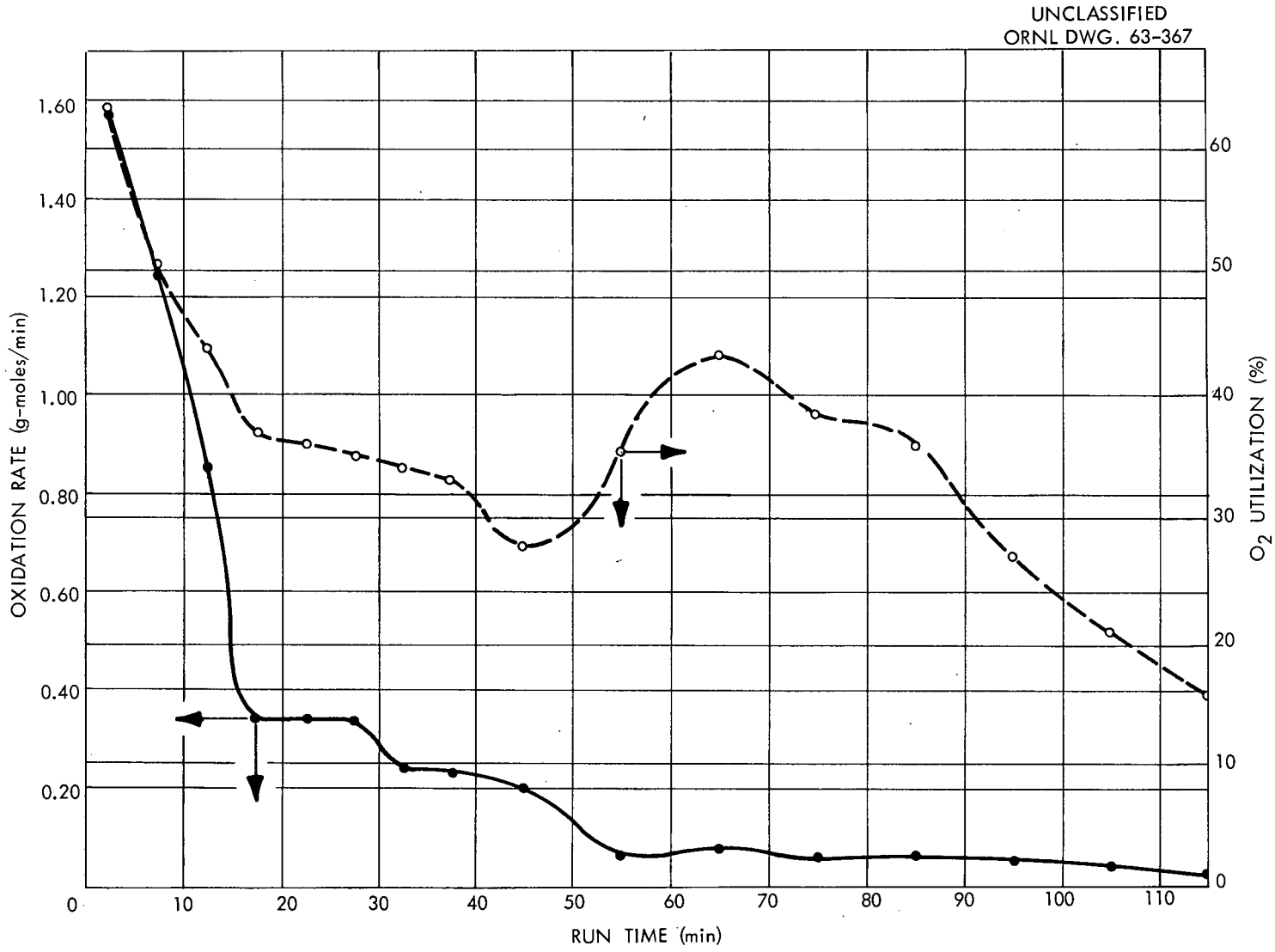

Fig. 7. Oxidation Rate and Oxygen Utilization During Run 0-3.

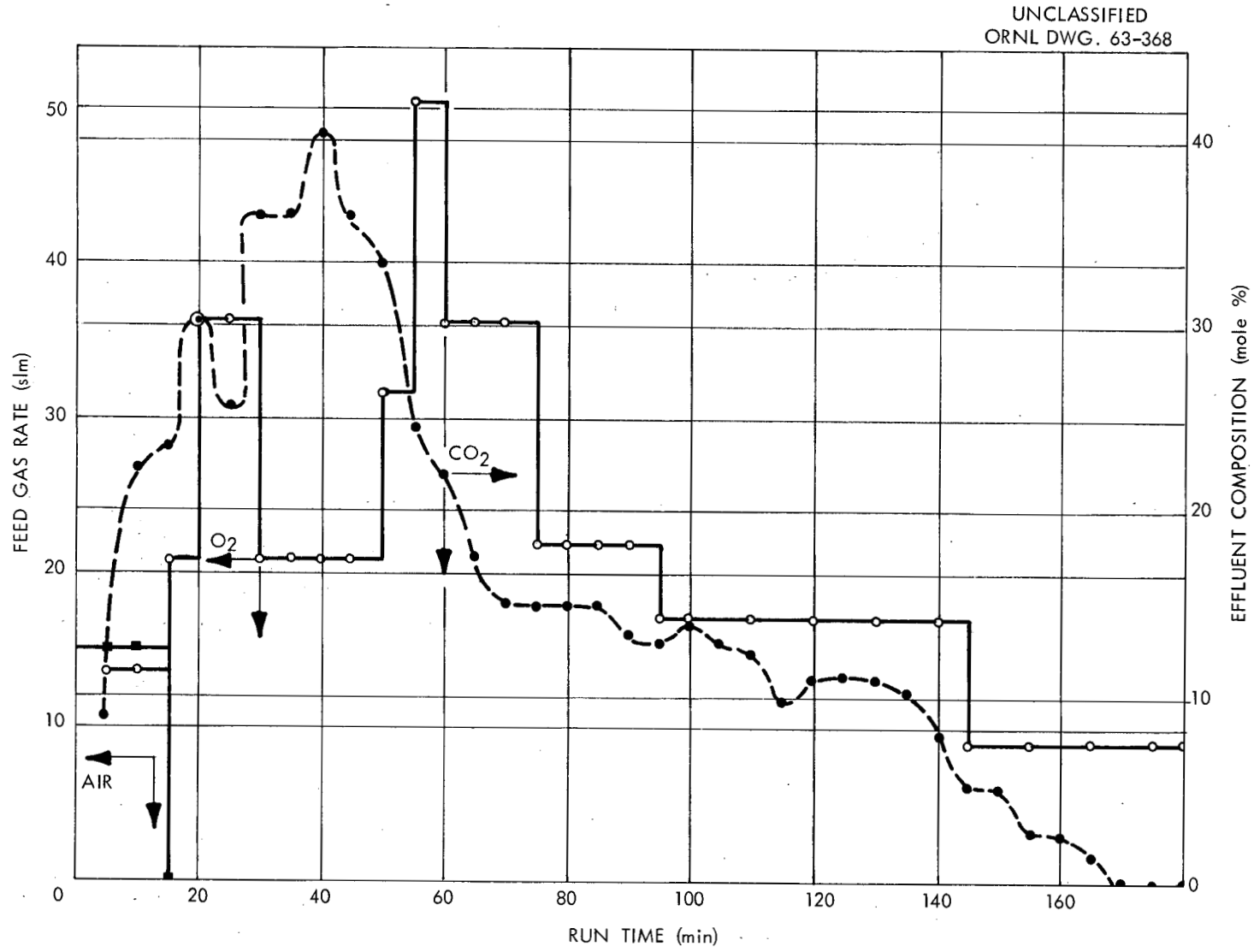

Fig. 8. Feed Rate and Effluent Composition During Run 0-4.

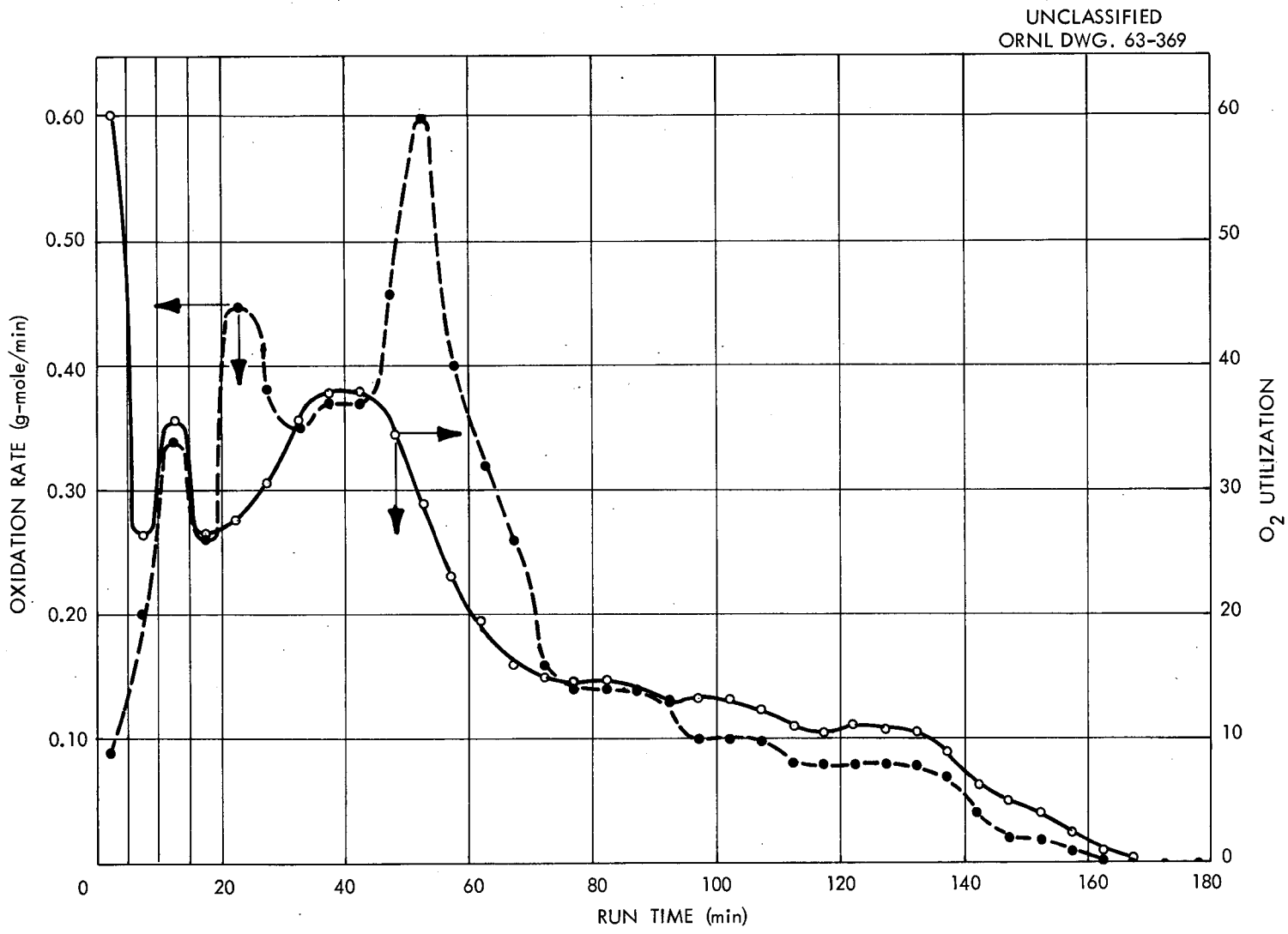

Fig. 9. Oxidation Rate and Oxygen Utilization During Run 0-4.

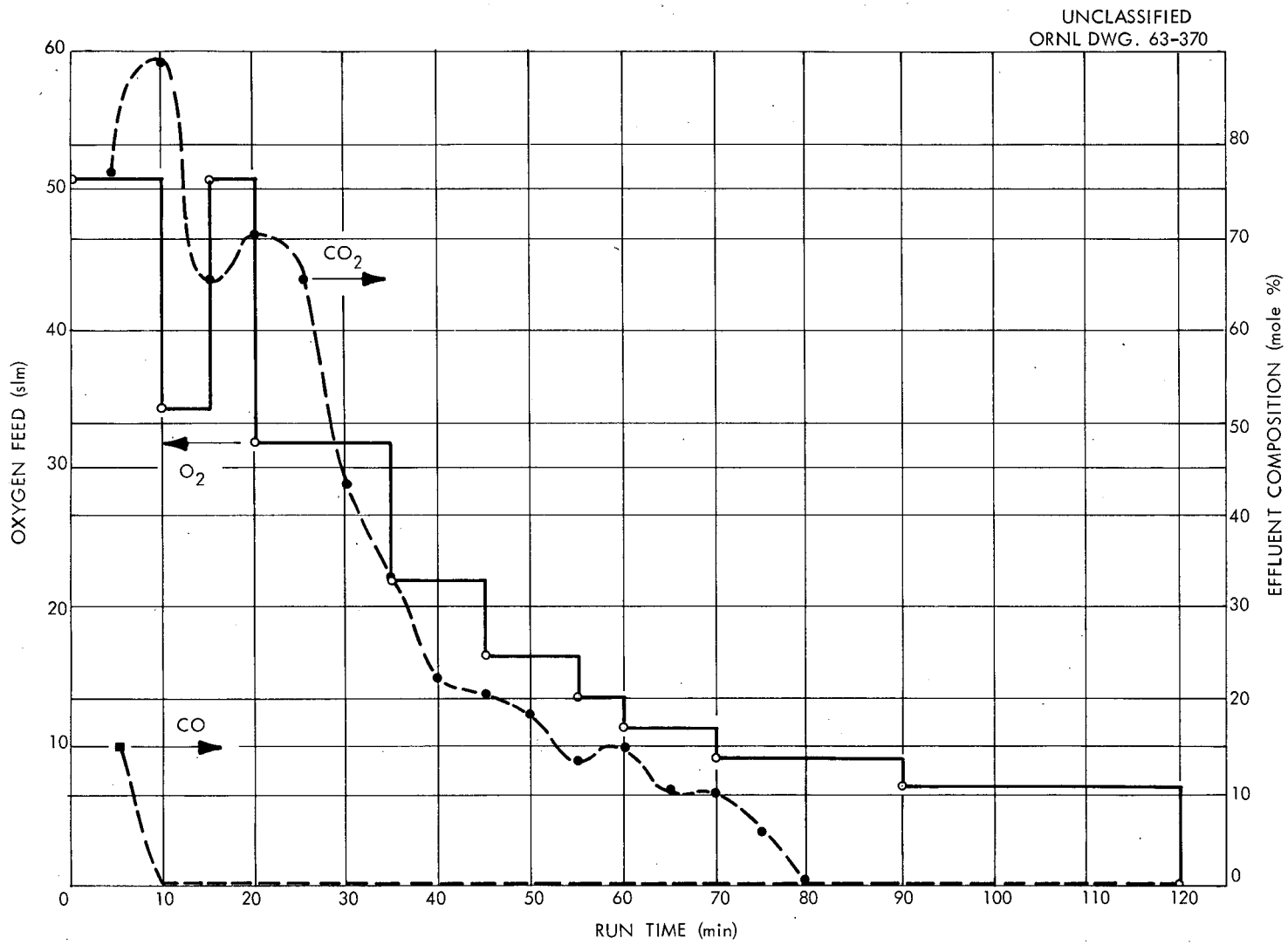

Fig. 10. Feed Rates and Effluent Composition During Run 5.

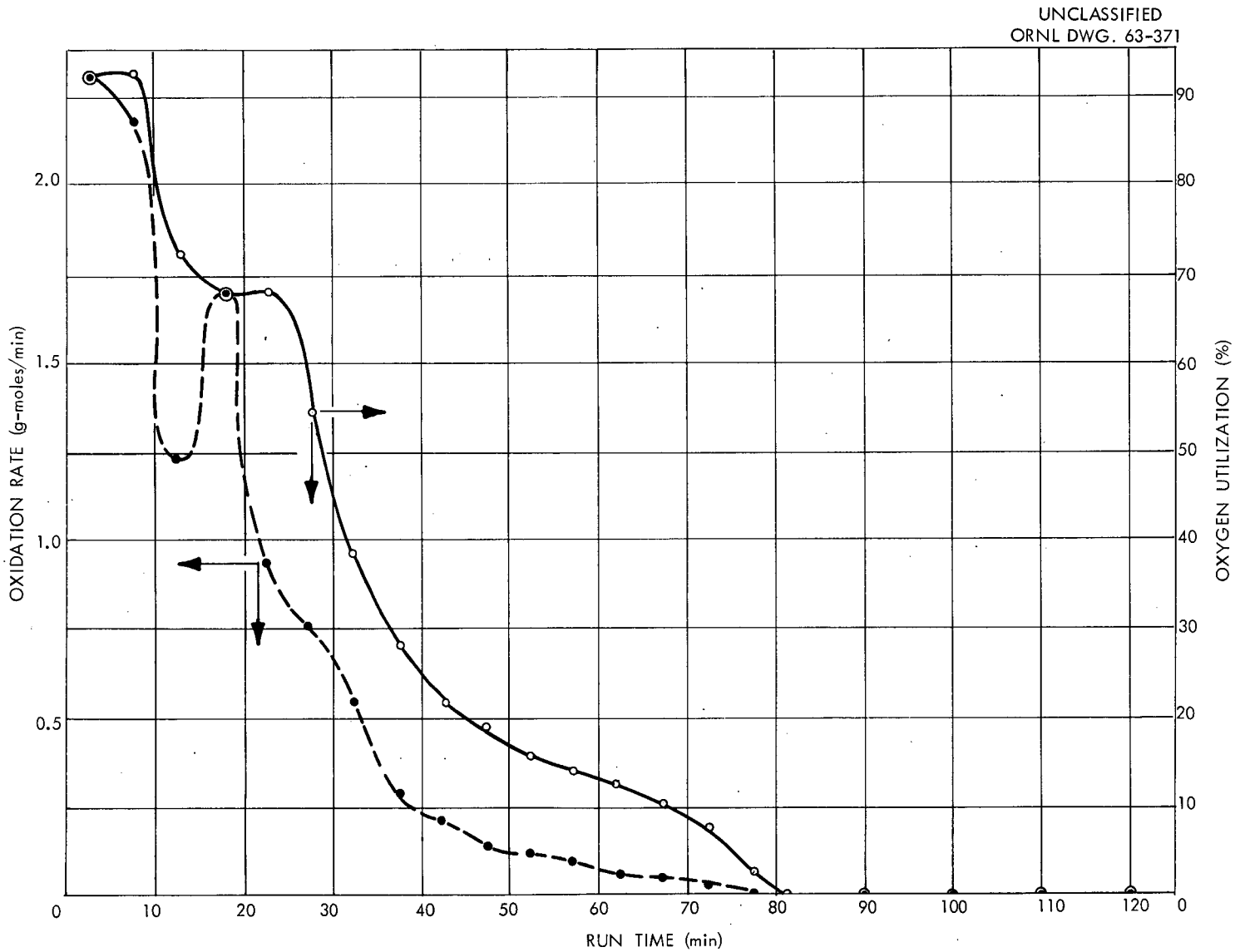

Fig. 11. Oxidation Rate and Oxygen Utilization During Run 5.

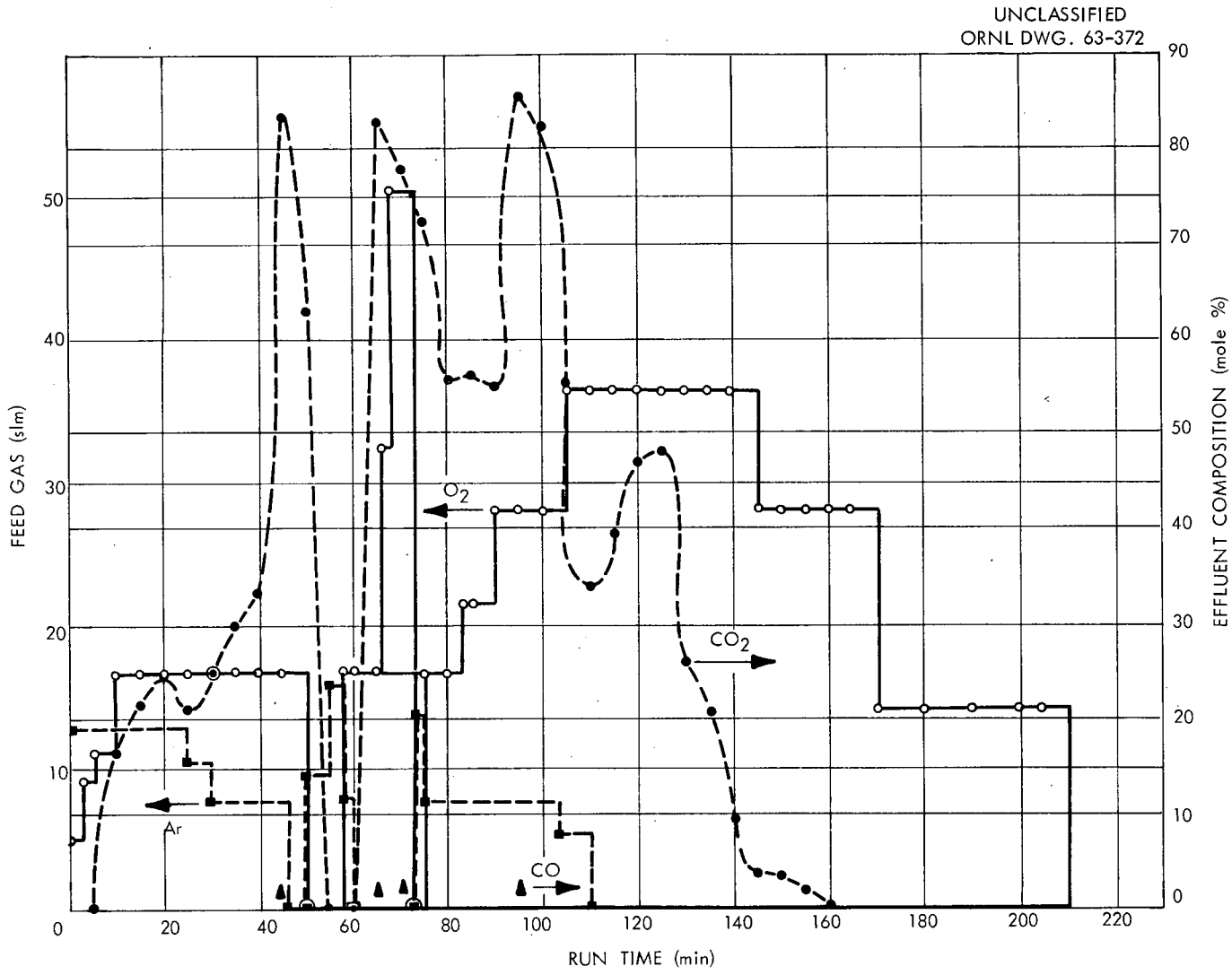

Fig. 12. Feed Gas Flow and Effluent Composition During Run 6.

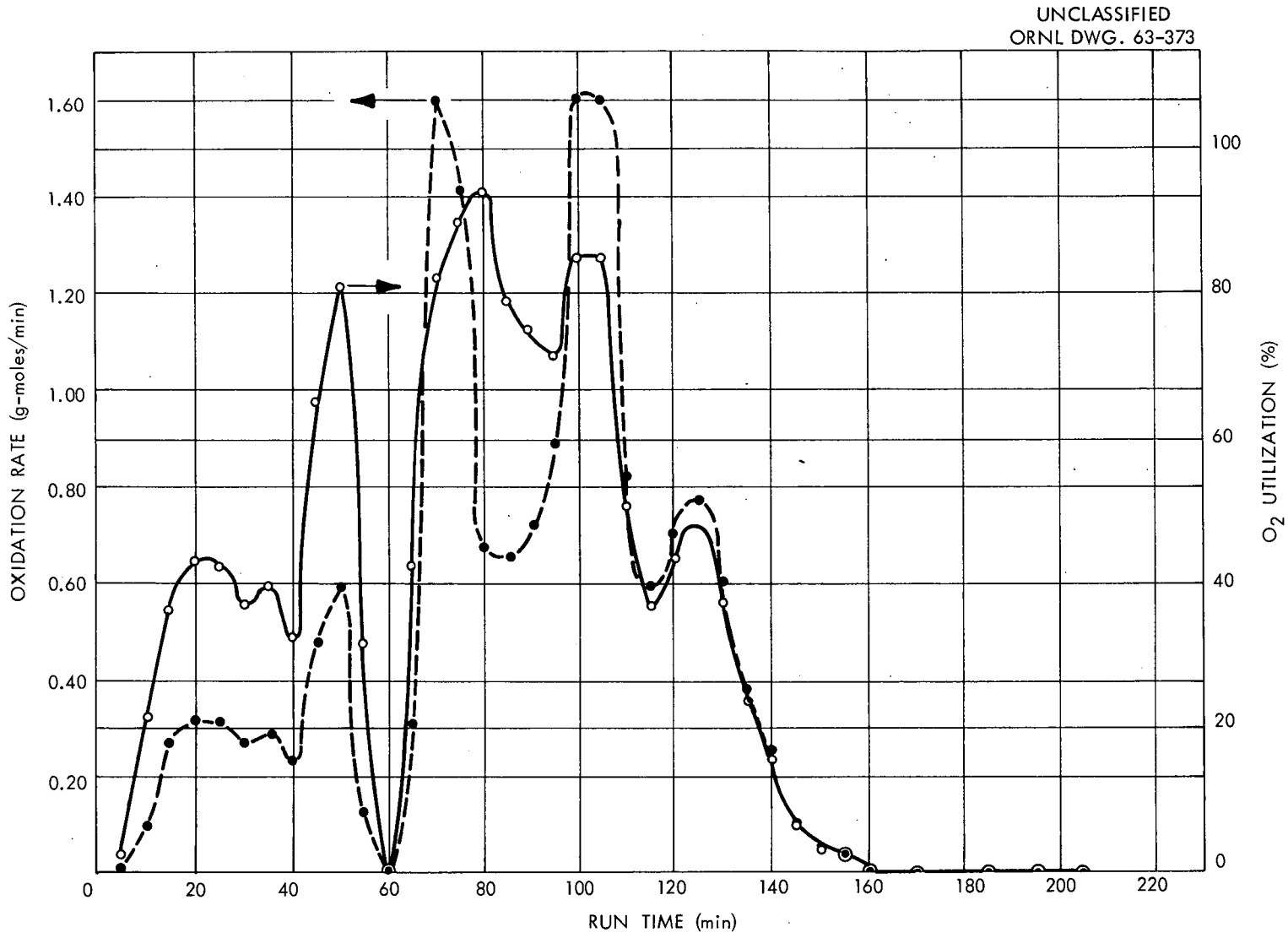

Fig. 13. Oxidation Rate and Oxygen Utilization During Run 6.

3.3 Temperatures of the Fuel Rods During Oxidation

Internal bed temperature during run 1 is shown in Fig. 14. A maximum temperature of 1320°C was recorded. In run 3, temperatures in excess of the melting point of the nickel sheath (1455°C) were observed, with slightly higher initial oxidation rates than in run 1.

3.4 Results of the Fluorination Step

Fluorination data are summarized in Table 3. The loss of uranium, based on analysis of the residue in the reactor, for the first four runs

Table 3. Fluorination Data

Run	% U Loss[a]	Time Required (min)	Av. F_2 Utilization (%)	Weight of Residue in Reactor (g)	U Balance (%)	Nb Balance (%)	Max. Wall Temp. (°C)
1	0.014	130	14.5	4.1	104	100.8	450
2	0.0114	110	14.5	2.23	102	96.0	450
3	0.0287	110	14.5	9.03	102	84.5	450
4	0.089	110	21.0	27.3	99.5		450
5	1.5	120	45.0	76.5[b]	93.8		450
6	0.85	205	57.5	56.2[b]	98		450

[a]U loss is based on analysis of reactor residue.
[b]Residue weight was high due to oxidation of fuel support.

was less than 0.1%. It is believed that the losses for the last two runs were high due to the presence of large amounts of NiF_2 and NiO in the reactor vessel. (This material resulted from the oxidation of the nickel grate, some of the oxide having been fluorinated.) About 2 or 3 hr were allowed for fluorination of the ash, and average fluorine utilization varied from 15 to 58% during the runs. The residue in the reactor for the first four runs is believed representative of the quantity and composition of residues in larger-scale systems. Based on the average for the first four runs, about 1 g of residue (from impurities in the fuel and vessel corrosion) per 100 g of rod were produced.

The quantity of off-gas solids on the filter and in the filter vessel after fluorination was almost the same as that present at the end of oxidation, which indicates little additional entrainment from the reactor and little fluorination of material on the filter. It is felt that the filter temperature (300°C) was too low for fluorination of the material

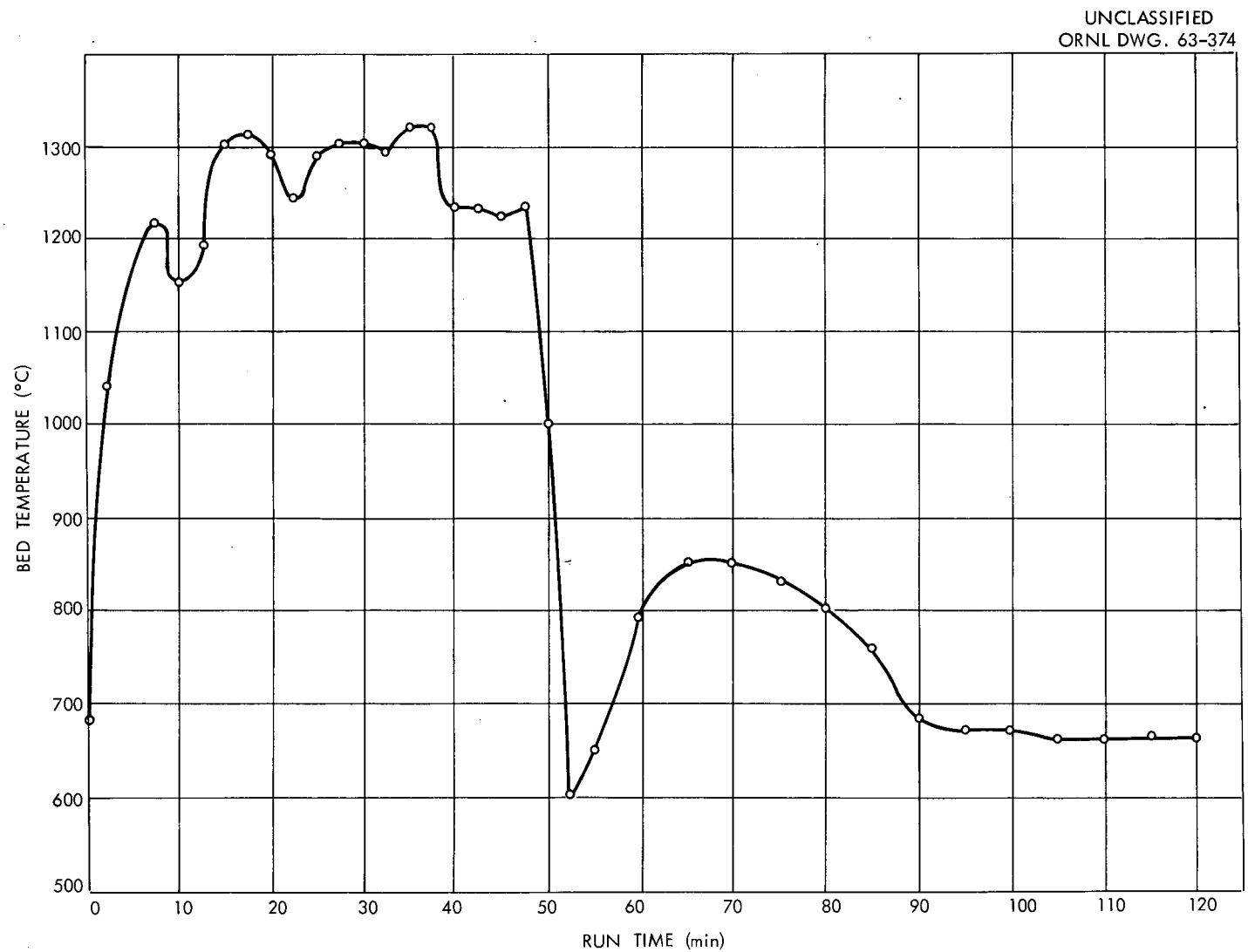

Fig. 14. Bed Temperature During Run 0-1.

on the filter. The uranium balance for the runs was within ±6% of the initial quantity. Niobium-balance data are available for the first three runs only and indicate a larger uncertainty than for uranium. Maximum reactor-wall temperature during the fluorination step was 450°C, and little or no cooling was required to maintain this temperature.

3.5 Separation of Uranium Hexafluoride from Niobium Pentafluoride

Uranium and niobium distribution data throughout the complete system is shown in Table 4. The NaF beds from runs 1, 2, and 3 were

Table 4. Data on the Distribution of Niobium and Uranium in the Process Equipment

Percentages shown are based on total quantity of uranium and niobium in initial fuel

	Reactor (400°C)		Filter (300°C)		NaF Bed 1 (400°C)		NaF Bed 2 (400°C)		NaF Bed 3 (100°C)	
Run	% U	% Nb	% U	% Nb	% U	% Nb	% U	% Nb	% U	% Nb
1	0.014	0.028	0	0	0.941	100.1	Not used	Not used	99.1	1.17
2	0.0114	0.024	0	0	2.69	95.6	0.055	0.356	97.2	0.0783
3	0.0287	0.074	0.018	0.069	1.175	98.	0.0261	0.23	98.8	0.175
4	0.089	0.23	0.012	0.02						
5	1.5	1.13	4.65	5.86						
6	0.85	0.66	3.29	0.39						

sampled at 1-in. intervals in order to establish the axial distribution of the uranium and niobium. As shown in Figs. 15 through 19, the niobium loading initially increased with distance down the bed and reached a maximum loading at a depth of 1 or 2 in. Also, in most cases, the loading rose sharply at the lower end of the bed. This behavior is attributed to the physical properties of the NaF after having sorbed NbF_5. About 15 wt % of the niobium-bearing NaF had disintegrated into a material about 14 mesh in size. This material dropped to the lower sections of the bed during the run and during sampling. The first NaF bed had fused in each case at the 1- or 2-in. level, which corresponds to the highest niobium loadings.

The uranium loadings on the first NaF trap were higher than expected according to previous work on the sorption of UF_6 on NaF. The tendency for the uranium loading to follow the same pattern as the niobium loading suggests a relationship between niobium loading and uranium loss.

[redacted]

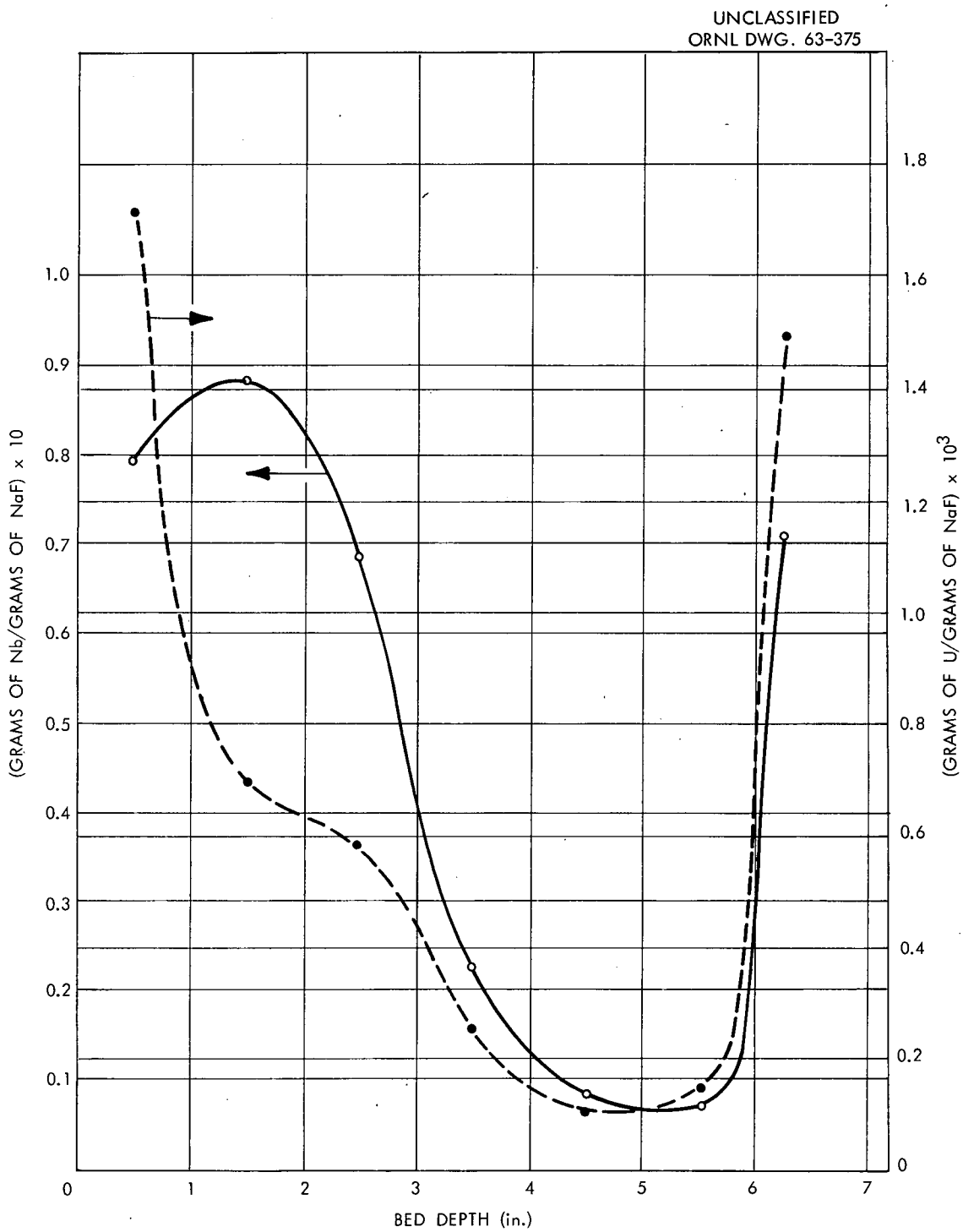

Fig. 15. Uranium and Niobium Distribution in NaF Bed 1 After Run 1.

[redacted]

[redacted]

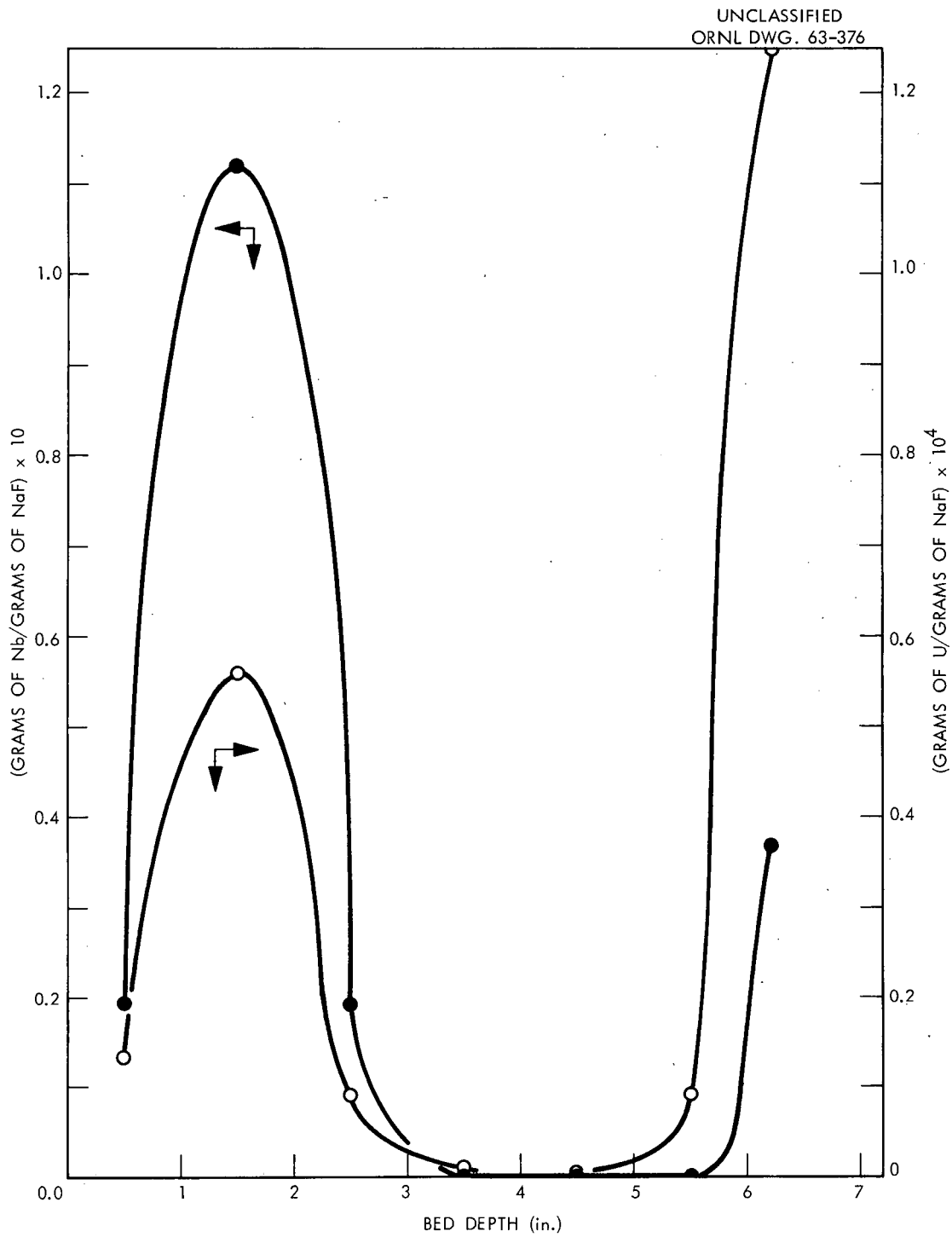

Fig. 16. Uranium and Niobium Distribution in NaF Bed 1 After Run 2.

[redacted]

[redacted]

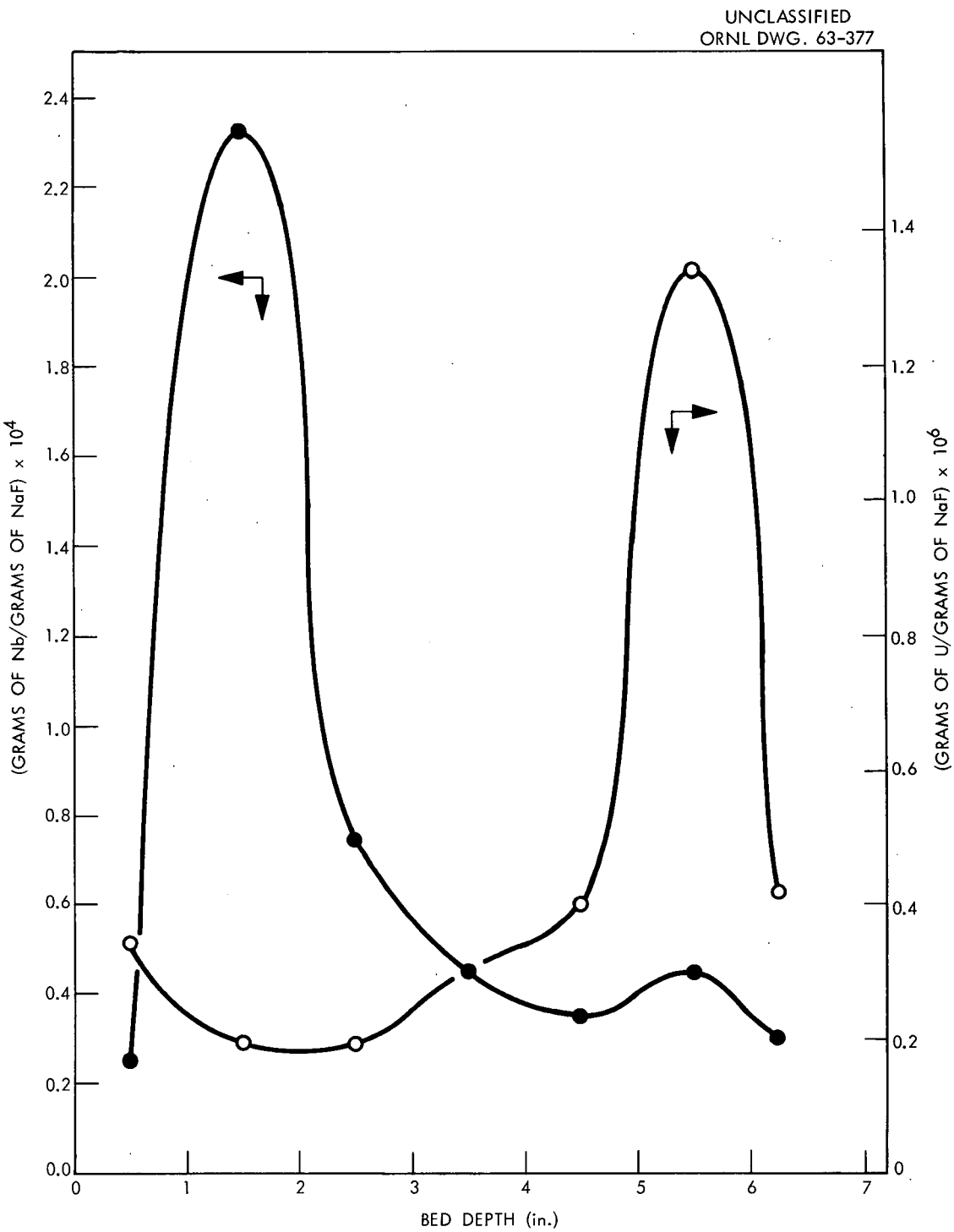

Fig. 17. Uranium and Niobium Distribution in NaF Bed 2 After Run 2.

[redacted]

[redacted]

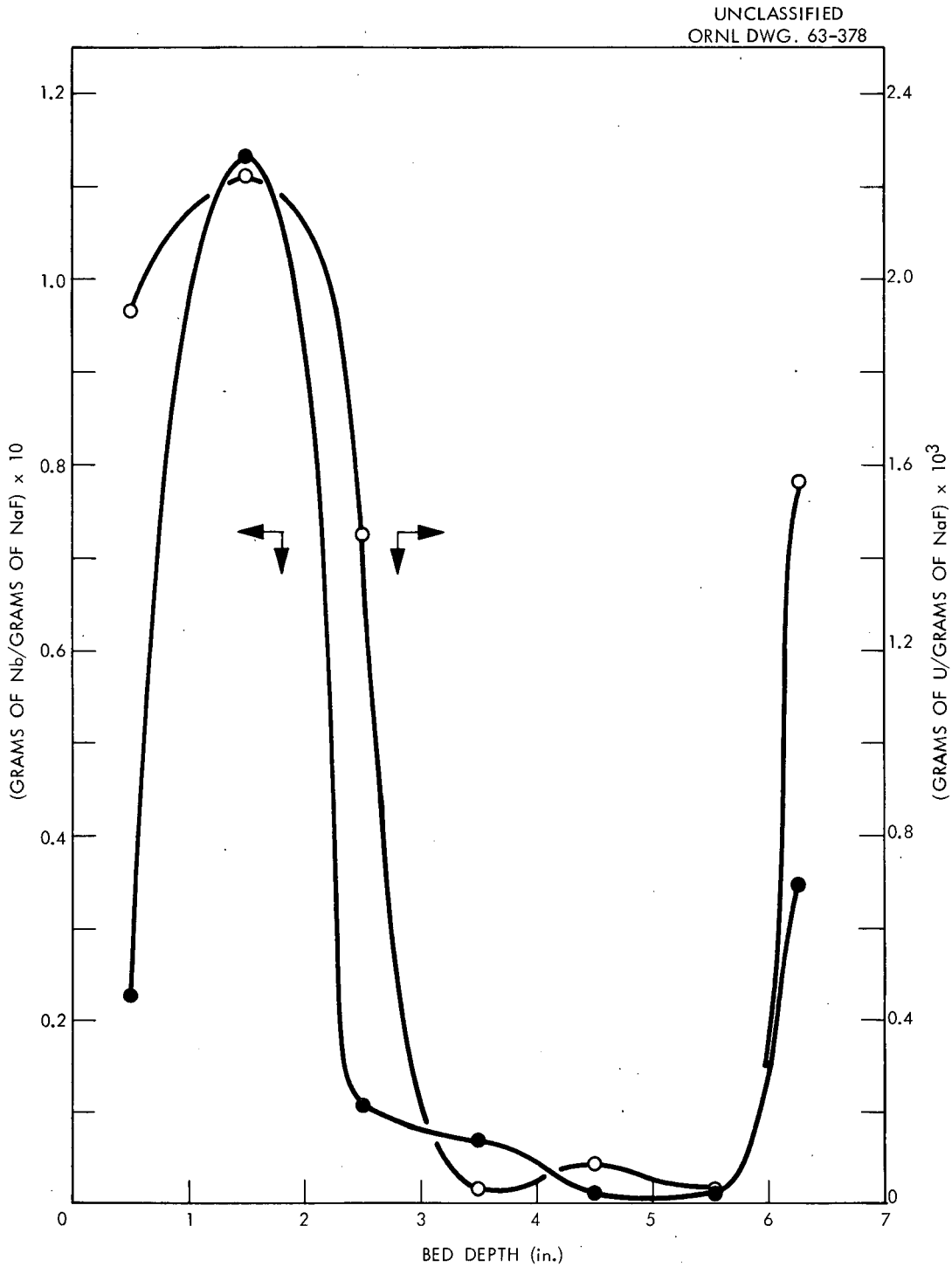

Fig. 18. Uranium and Niobium Distribution in NaF Bed 1 After Run 3.

[redacted]

[redacted]

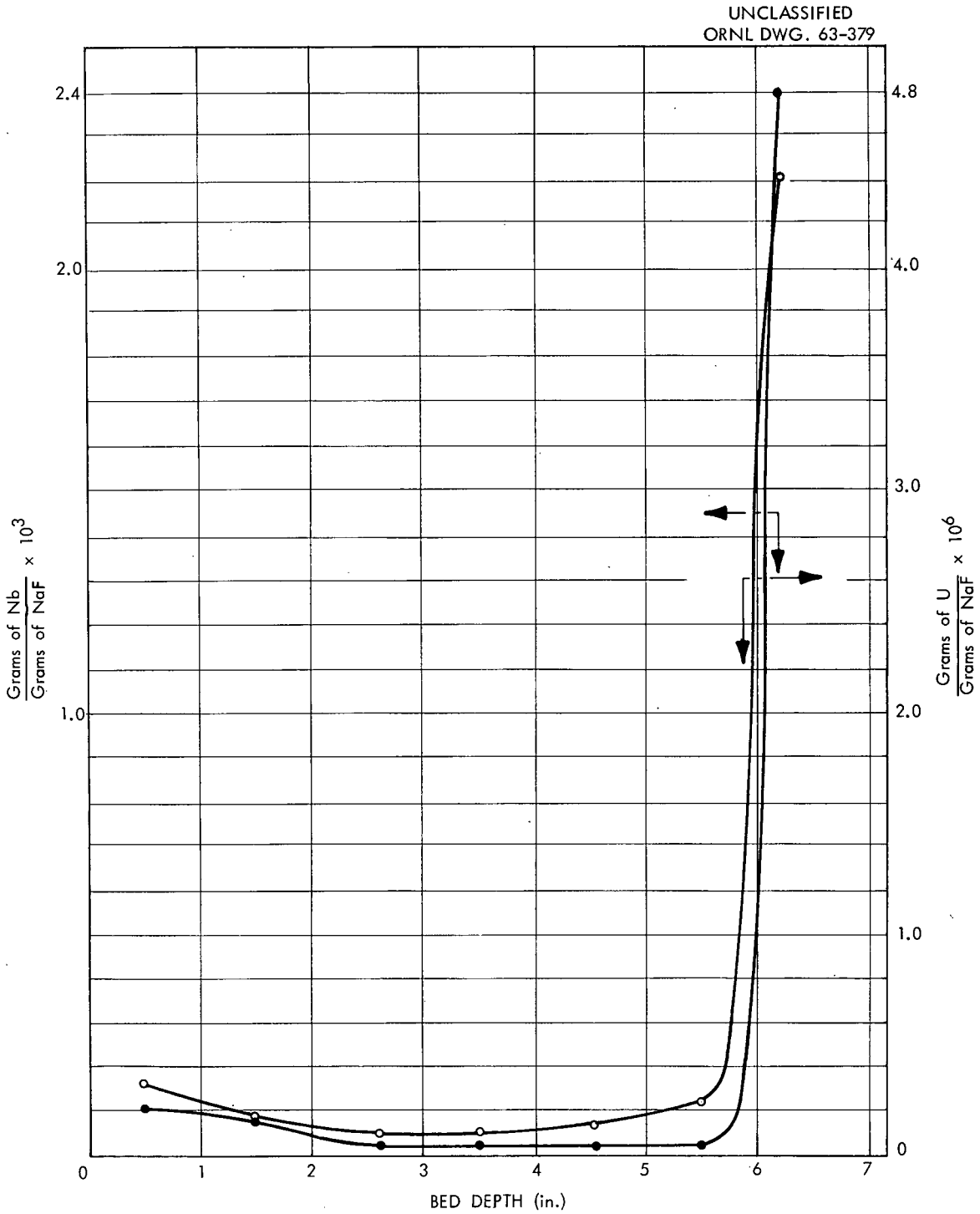

Fig. 19. Uranium and Niobium Distribution in NaF Bed 2 After Run 3.

[redacted]

A plausible hypothesis for this behavior, advanced by G. I. Cathers, is that the volatile UF_6 decomposes to nonvolatile UF_5 in the 400°C NaF beds during the early part of a run, when the fluorine concentration in the gas stream is low due to the high utilization of fluorine in the reactor. Subsequent sorption of NbF_5 could then retard the removal of this uranium during the latter part of the run when the fluorine concentration is high. Losses due to this mechanism could be prevented by feeding fluorine downstream of the reactor during the early part of the run in order to maintain a high fluorine concentration.

Initially it was hoped that NbF_5 would desorb from NaF as does UF_6. A test in which NaF that contained NbF_5 was heated to about 800°C indicated that the complex was not reversible. In view of this, if NaF beds were used in a hot operation it would be necessary to empty the beds or otherwise change the NaF frequently.

4. DESCRIPTION OF THE APPARATUS AND THE KIWI-B-1B FUEL ELEMENTS

The design of the equipment to explore the oxidation and fluorination of graphite-uranium carbide fuels for uranium recovery was based on known physical and chemical properties of the system and on general design criteria such as size, capacity, etc. The system was designed for and installed in Building 3592 at Oak Ridge National Laboratory. Some of the analytical procedures were developed specifically for this facility.

4.1 Design Criteria for the Oxidation-Fluorination Apparatus

The design of the equipment was influenced by several physical and chemical properties of the system. Many of these properties were discussed in an earlier report,[1] and the main points are listed below.

1. During the oxidation step there is a possibility of there being explosive mixtures of carbon monoxide and oxygen in the reactor effluent (greater than 12.5 mole % CO in greater than 5 mole % O_2).

2. In general, excess oxygen will ensure a low carbon monoxide content in the effluent.[2]

3. Since excessive temperature will cause severe sintering or fusing of the oxidation ash, sufficient cooling must be available to remove the heat of reaction both during both the oxidation step and the fluorination step.

4. The oxidation ash is expected to remain in the reaction vessel throughout the oxidation step.[2]

5. An ignition temperature of about 700°C is required during the oxidation; thus, external reactor heating is needed.

6. The fluorination step will be carried out at a temperature in excess of 400°C because this is the minimum temperature at which complete fluorination of the ash occurs.[3]

The experimental apparatus has the following characteristics and capabilities. (In many cases, choices were arbitrary; however, space and time limitations were also factors.)

1. The equipment and auxiliaries make it possible to oxidize the graphite-uranium carbide fuel, to fluorinate the resulting ash, and to separate the UF_6 from other volatile metal fluorides, such as NbF_5, and from unused fluorine and oxygen and any diluent gas.

2. A porous metal filter is used to remove solids from the reactor effluent.

3. The UF_6 product is separated from other volatile metal fluorides and contaminants by use of selective sorption on beds of NaF.

4. The oxidation system operates with a minimum of 5 psig so that an effluent side stream can be sent to an effluent analysis system.

5. The system is sized so that a minimum of 1 liter of reactor volume at a diameter of 2.5 in. is available, and the off-gas treatment system has capacity for the effluent resulting from treatment of 1 liter of graphite-uranium fuel. For Kiwi-B-1B fuel elements, this represents up to seven rods 12.5 in. long.

6. There is sufficient external heating capacity to heat the reaction vessel to 700°C and all effluent treatment vessels to 400°C.

7. There are provisions for metering the following types and maximum amounts of gases to the reaction vessels at 15 psig:

Oxygen	50 slm
Air	50 slm
Nitrogen	50 slm
Argon	50 slm
Fluorine	5 slm

8. The material of construction for all portions of the system contacted by fluorine is nickel or Monel. Other portions of the system were made of stainless steel for temperatures higher than 100°C, and copper for temperatures lower than 100°C.

9. There is instrumentation for measuring and recording reactor wall temperatures, reaction zone temperatures, temperature of all vessels and process lines.

10. There is instrumentation for continuous measurement of the effluent gas flow rate, for continuously measuring and recording the carbon monoxide content of the effluent, and for periodic measurement and recording of the oxygen, carbon monoxide, and carbon dioxide content of the effluent.

4.2 Development and Design of Instruments

The instruments used for the oxidation and fluorination apparatus were standard items except for the instruments for determining the composition of the effluent gas from the oxidation step. A platinum-wire combustion cell was used to continuously monitor the effluent gas for carbon monoxide content, and a gas-sorption chromatograph using comparative thermal conductivity was used for periodically analyzing effluent gas for O_2, CO, and CO_2. A Greenbriar model 920 Chroma Lab was used for these analyses. The Chroma Lab had both a thermal-conductivity detecting unit and a combustion-cell detecting unit. These units could be used together or separately (Fig. 20).

4.21 Gas Chromatograph

The thermal conductivity portion of the Chroma Lab was used as the detecting unit for a gas-sorption chromatograph. Helium was used both for the reference and carrier gases, and the electrical output from the Wheatstone bridge circuit of the thermal conductivity cell was recorded on a continuous-recording potentiometer. Adequate separation of the O_2, CO, and CO_2 was achieved by a sorption column (1/4 in. in diameter and 12 ft long) made up of silica gel (20 to 40 mesh) and operating at 60°C with a helium carrier gas rate of about 50 cc/min. Separated sample-gas components appeared in the sorption column effluent at the following times:

O_2 - 3.5 min

CO - 5 min

CO_2 - 20.5 min

By using the 15 min of "dead" time between the CO and CO_2 analysis, it was possible to process a gas sample every 10 min without mutual interference of the electrical signals (Fig. 21). Optimum sample size was about 2 cc. For the three components of the gas, the pulse heights of the recording potentiometer had an approximate linear relationship with component concentration in the ranges tested, and the sensitivity for each component was less than 0.1 vol %.

4.2.2 Combustion Cell

The model 920 Chroma Lab also had a combustion cell that could be used separately from the chromatographic section (Fig. 20). The cell that used comparative heated-platinum elements in a Wheatstone bridge was operated by using one element as the standard in a stream of air,

UNCLASSIFIED
ORNL DWG. 63-380

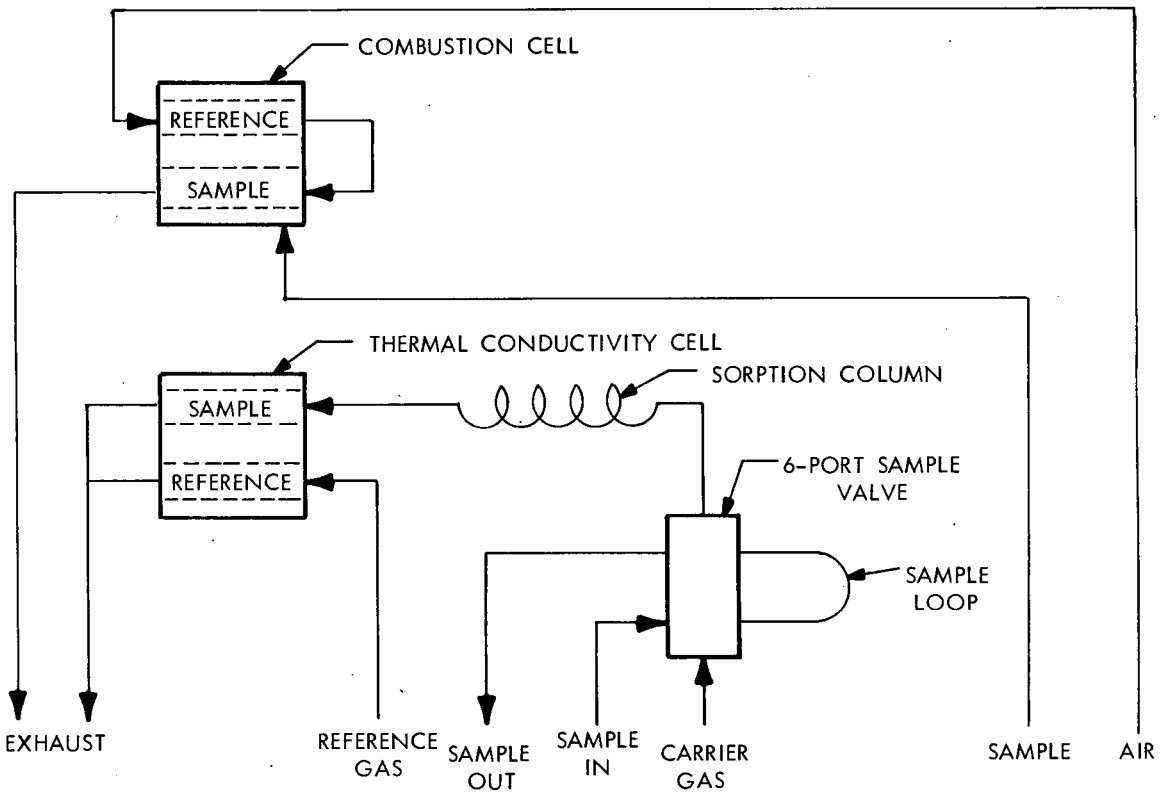

Fig. 20. Piping Diagram for Greenbriar Model 920 Chroma Lab.

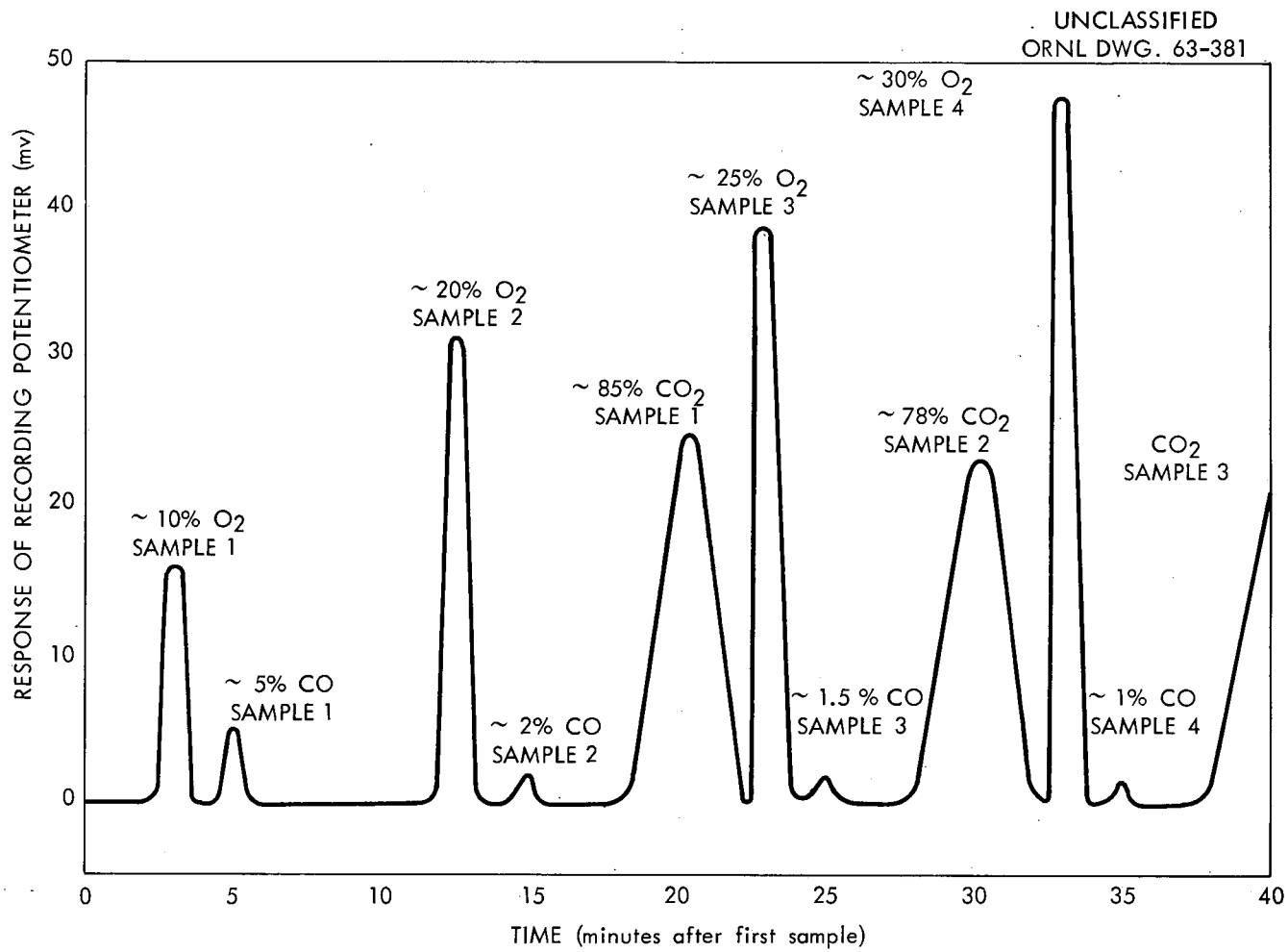

Fig. 21. Typical Chromatographic Plot From Chroma Lab. for Determining of O_2, CO, and CO_2 During an Oxidation Test.

and the other element in a stream of air plus the gas sample containing the combustible carbon monoxide.

About 100 cc of air with about 10 cc of sample gas gave an adequate electrical signal over the range desired. The resulting potentiometer reading was approximately linear with carbon monoxide concentration in the range of 0.1 to 10 vol % carbon monoxide, and the sensitivity was less than 0.1 wt % CO.

4.3 Design of Components of the Oxidation-Fluorination Apparatus

The various process components were designed according to the criteria set forth above and included the reaction vessel, filter assembly, NaF traps, and the soda-lime trap.

4.3.1 Reaction Vessel

The reaction vessel, which had a minimum reaction volume of 1 liter was made from 2.5-in. sched-40 nickel pipe (Figs. 22 and 23). The bottom section reduced to 1 in. in diameter, and the top was fitted with a blind flange. Inlet gas lines entered from the side of the reactor above the cooling section and in the bottom in the reduced section. The effluent line was at the bottom, below a nickel grate. External cooling was achieved by a spiral of 1/4-in. stainless steel tubing welded to the outside of the reactor, and there were provisions for the introduction of three sheathed thermocouples through the top flange.

4.3.2 Filter Assembly

The filter assembly was composed of a filter housing made from 3-in. sched-40 nickel pipe and a medium porosity, nickel, cylindrical filter. The filter had about a square foot of filtering area (Fig. 24), and external heating was by a wrapped Calrod.

4.3.3 NaF Traps

The NaF traps were made from a 4-in.-diam, sched-40, Monel pipe with a welded bottom and a flanged top. Gas was introduced at the top of the vessel and removed from the bottom. The NaF capacity was 1250 g of 1/8- x 1/8-in. pellets, which were supported on a screen in the bottom of the vessel (Fig. 25). External heating was achieved by a wrapped Calrod, and an internal, sheathed thermocouple was used to measure temperature.

4.3.4 Soda-Lime Trap

The soda-lime trap for fluorine removal was made from sched-40, 3-in. Monel pipe and had a soda-lime capacity of about 5 liters (Fig. 26). Gas entered at the top and exited from the bottom. Thermocouples were attached to the outside of the vessel every 12 in. of height.

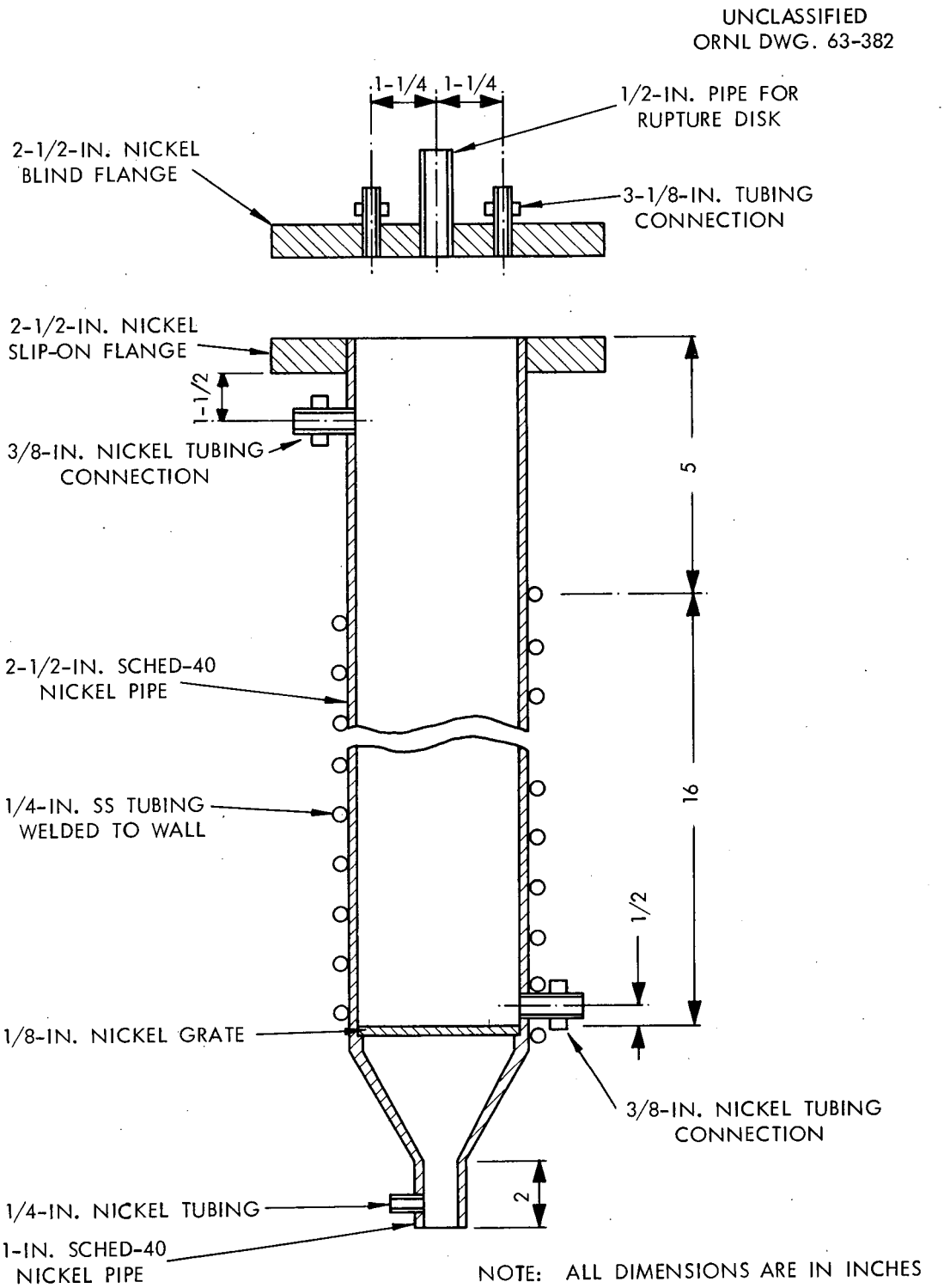

Fig. 22. Reaction Vessel for Oxidizing and Fluorinating Prototype Kiwi-B-1B Fuel.

UNCLASSIFIED
ORNL-PHOTO 57918

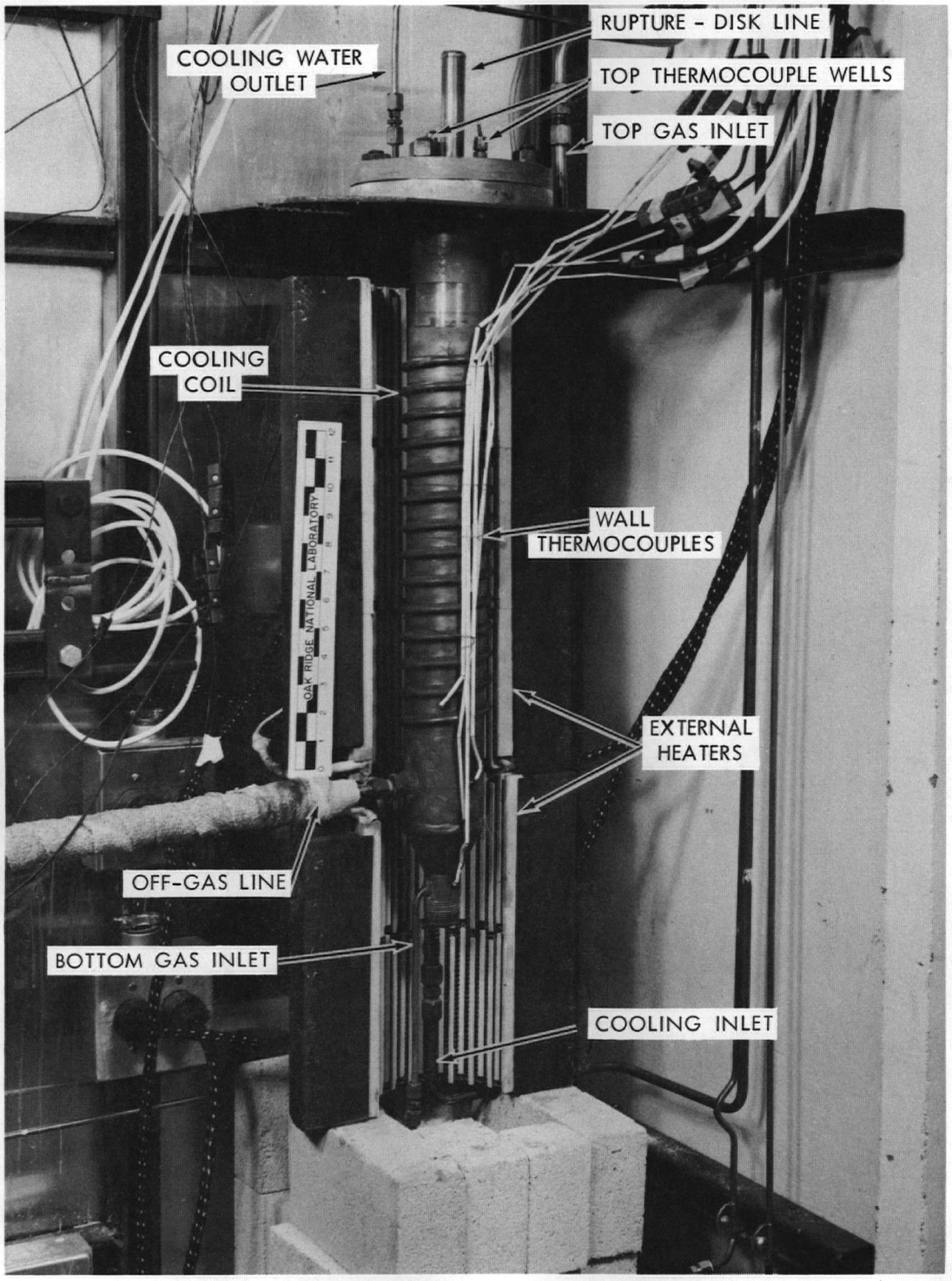

Fig. 23. Oxidation-Fluorination Reaction Vessel, Installed.

[redacted]

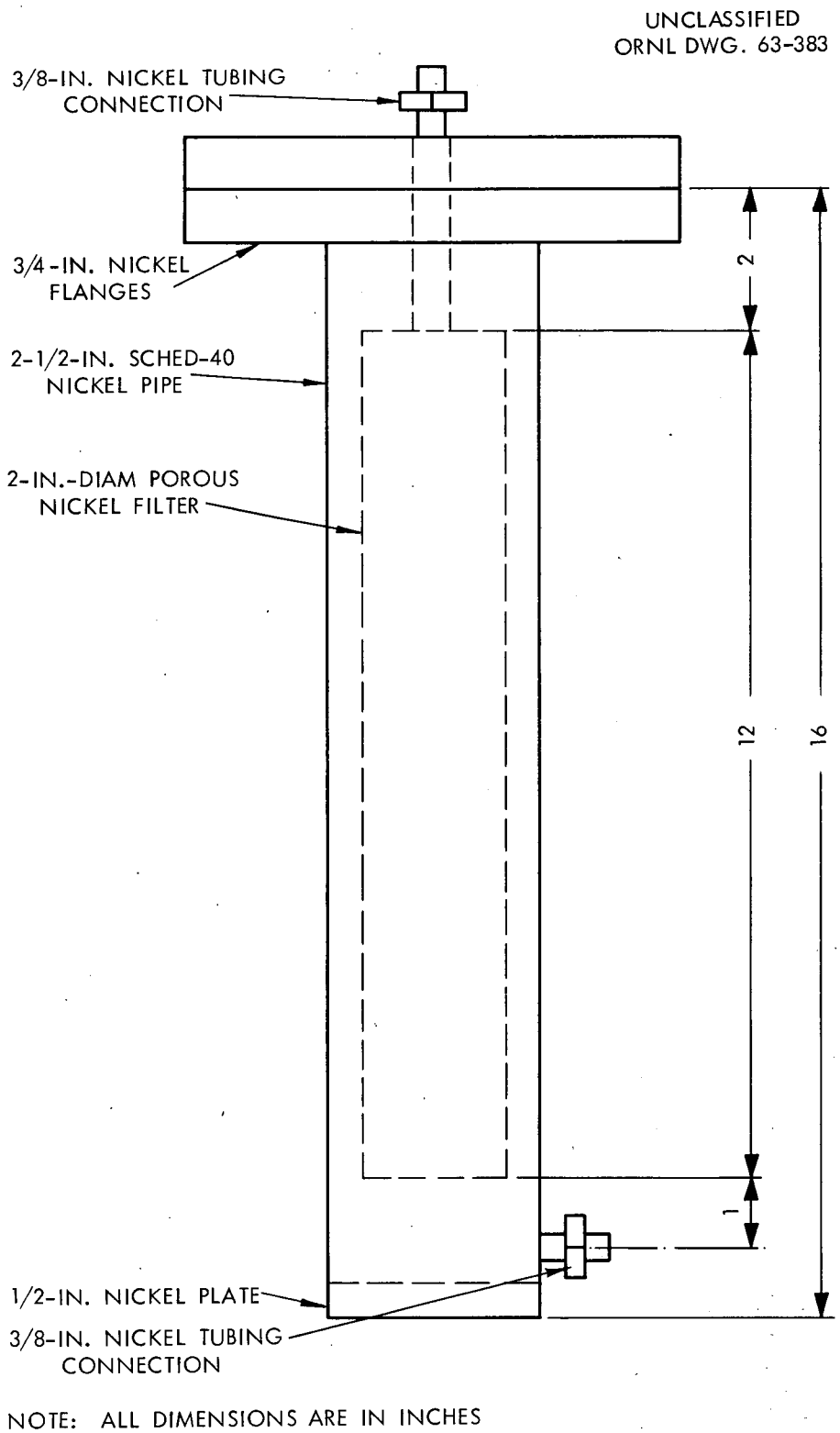

Fig. 24. Filter Assembly for the Off-Gases from the Apparatus for Oxidizing and Fluorinating the Prototype Kiwi-B-1B Fuel Elements.

[redacted]

UNCLASSIFIED
ORNL DWG. 63-384

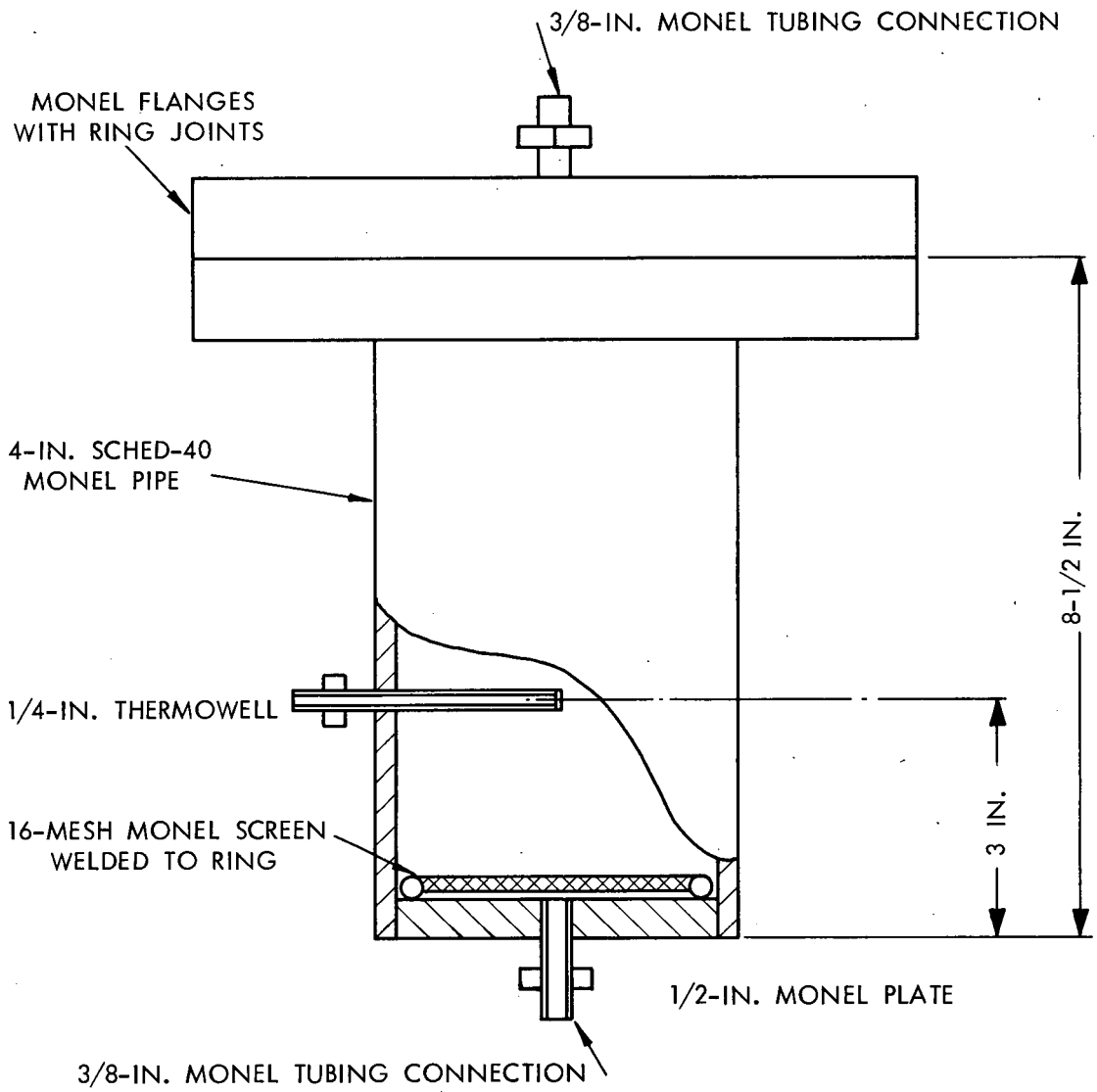

Fig. 25. Sodium Fluoride Trap for Separating UF_6 from NbF_5 in the Gaseous Products of the Fluorination Step.

[redacted]

UNCLASSIFIED
ORNL DWG. 63-385

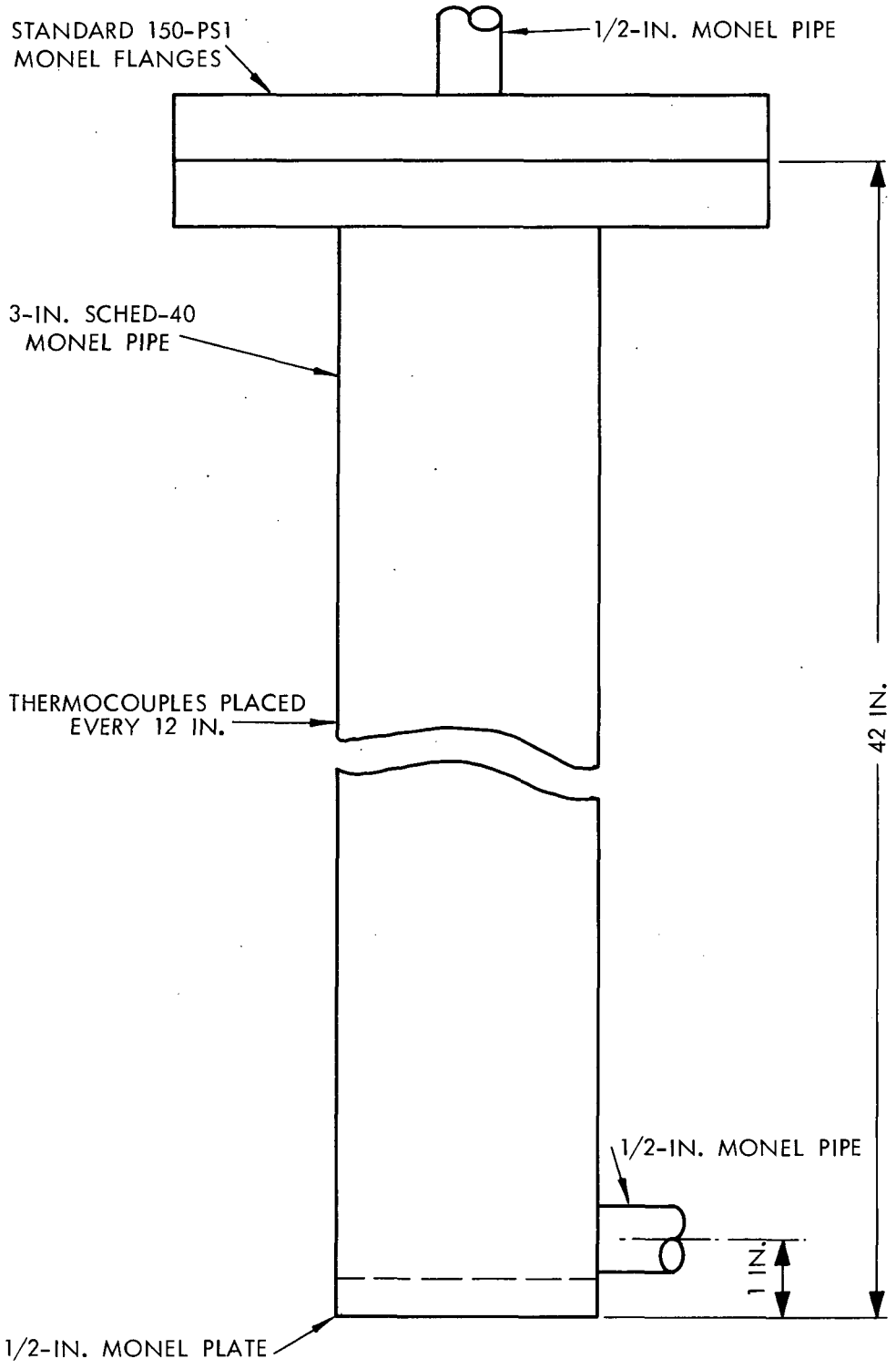

Fig. 26. Soda-Lime Trap for Removing Fluorine from the Effluent Gases.

[redacted]

4.3.5 Layout of the Equipment

The apparatus for the experiments was installed in the southeast side of the first floor of Building 3592 at Oak Ridge National Laboratory. Major process compoents were installed in a row inside a metal enclosure (Fig. 27). Flow controls and instruments were mounted in a compact array outside of the metal enclosure (Fig. 28). A more detailed description of the process controls and instrumentation is included in the Appendix.

4.4 Description of the Kiwi-B-1B Fuel Elements

Lengths of prototype Kiwi-B-1B graphite-uranium carbide fuel were used in the experimental program. The fuel rods were vertically arrayed in the heated section of the 2-1/2-in.-diam reactor.

The Kiwi-B-1B prototype fuel rods are fluted uranium-carbide-impregnated graphite tubes, 0.75 in. in diameter and up to 52 in. long, containing 7 or 19 longitudinal passages to allow flow of the hydrogen propellant. The passages are partially lined with 1- to 2-mil-thick NbC to prevent corrosion in the high-temperature region of the reactor. The elements were made by blending uranium oxide and graphite powders, extruding the proper shape, and graphitizing at temperatures above 2100°C to form a nearly homogeneous dispersion of UC_2 in graphite. Niobium metal tubes were inserted in the propellant channels, and the elements were refired to about 1800°C to convert the liner to NbC, thus the NbC liners. During the lining process, 2 to 5% of the uranium diffuses into the NbC, and a UC-NbC solid solution is formed.

Gases used in the tests were of the following grades:

Helium	Navy grade A, purity about 100%
Oxygen	99.5 purity
Nitrogen	99.6% purity (oil-pumped)
Argon	99.9% purity
Air	Plant air, oil pumped to 100 psig
Fluorine	As received from ORGDP (HF removed by NaF sorption

5. OPERATING PROCEDURES

5.1 Oxidation Step

In each run, the fuel rods were placed in the reactor on a metal grate. The grate for the first run consisted of a 1/4-in. nickel plate drilled with 1/4-in.-diam holes on a 3/8-in. triangular pitch. A stain-

UNCLASSIFIED
ORNL-PHOTO 57919

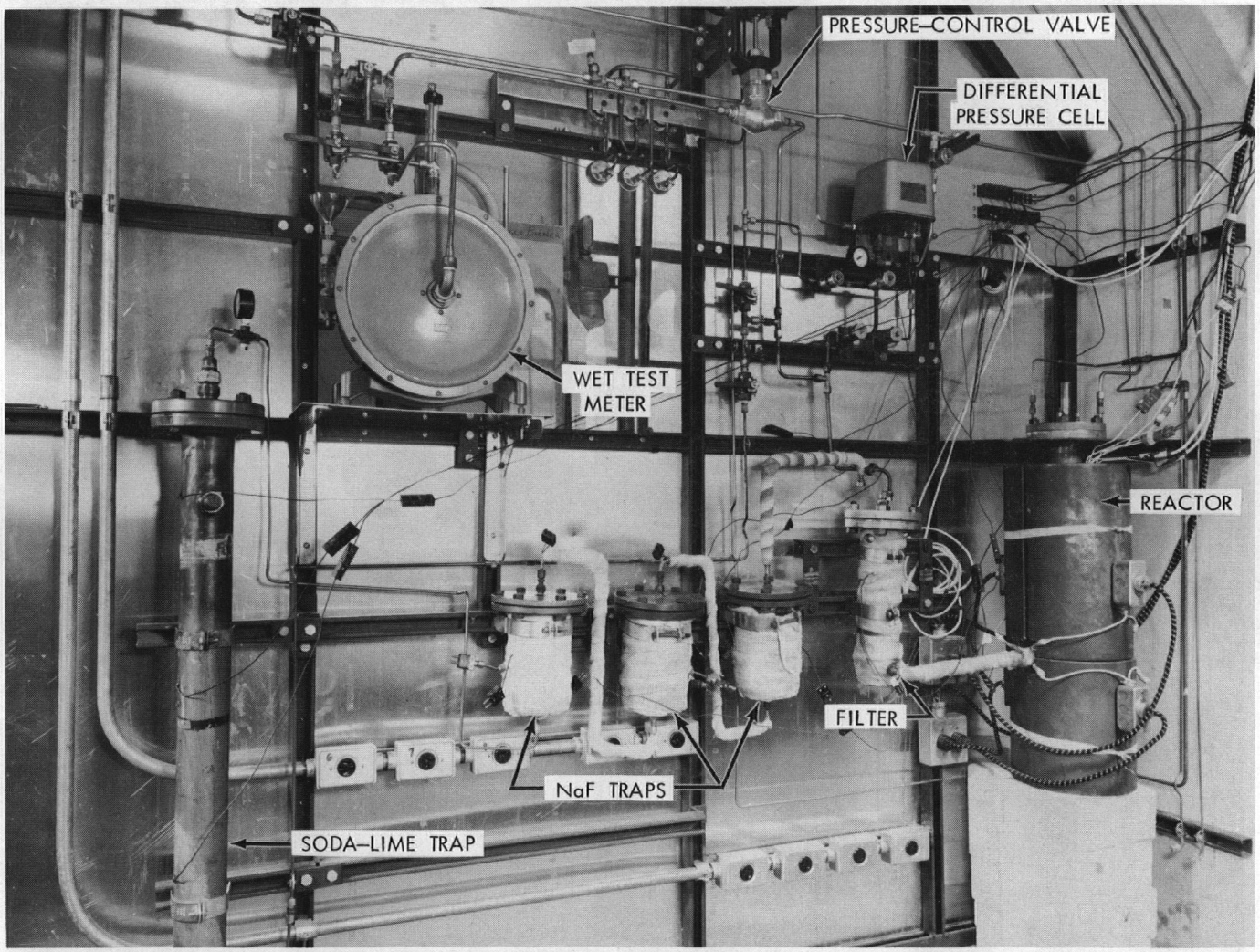

Fig. 27. Overall View of the Apparatus for Recovering the Uranium from Prototype Kiwi-B-1B Fuel.

UNCLASSIFIED
ORNL-PHOTO 57921

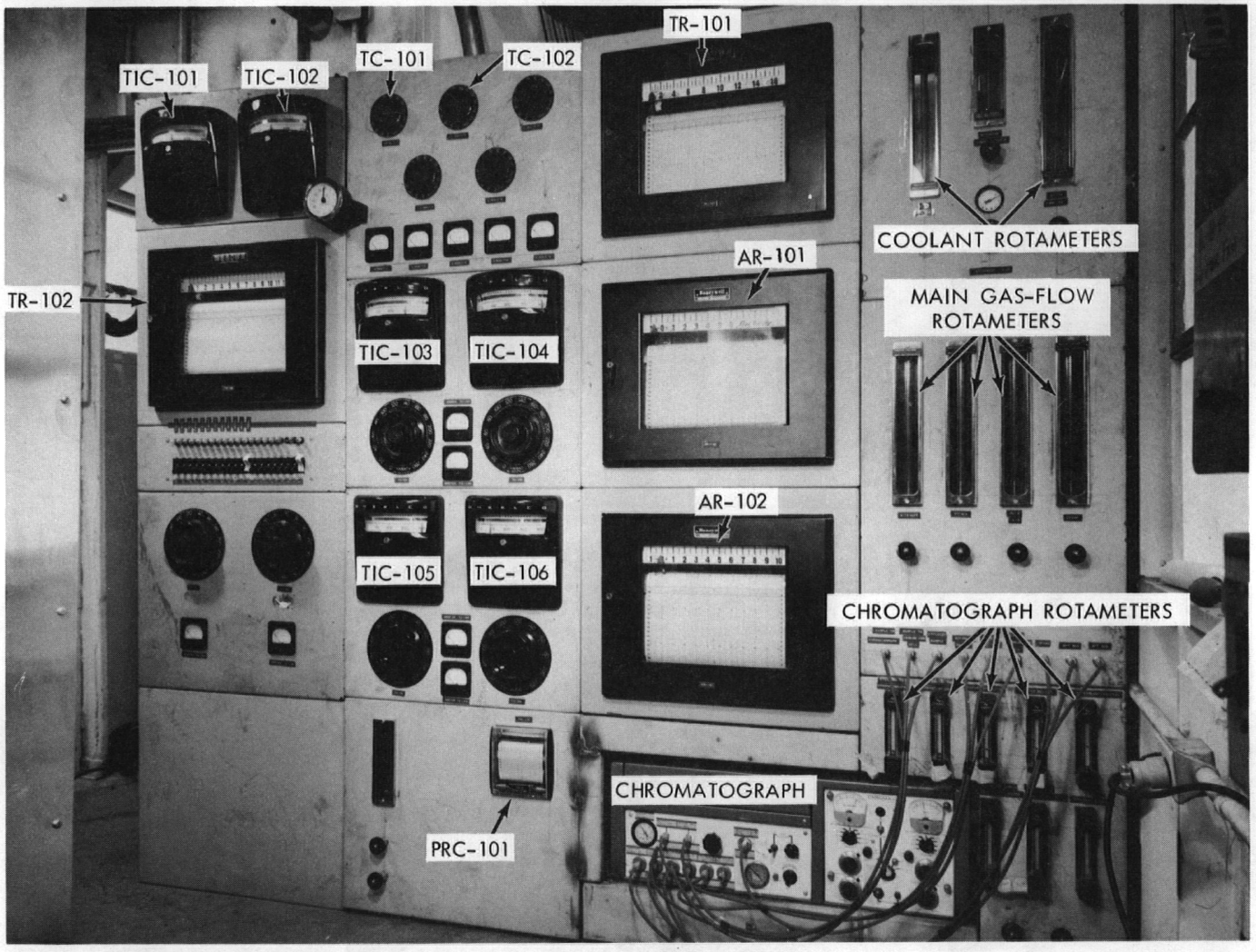

Fig. 28. Instrument and Control Panels for Apparatus for Recovering Uranium from Prototype Kiwi-B-1B Fuel.

less steel screen (40 x 40 mesh) covered the top surface of the grate and was welded to the grate at the edges. Due to deterioration of the screen during the run, the grate for the next four runs was changed to a 1/8-in. nickel plate drilled with 1/8-in.-diam holes on a 1/4-in. triangular pitch. The nickel plate from the first run was used as a grate for run 6.

For the oxidation step, the reactor was heated to 700°C, with an argon purge of 5 slm passing through the system. The oxidation reaction was initiated by passing pure oxygen or oxygen diluted with argon or nitrogen into the reactor. Air and water coolant rates were then adjusted in order to maintain wall temperatures of 500 to 700°C.

During runs 1 through 4 the oxidizing gas entered the reactor at the top inlet and exited just below the grate. During runs 5 and 6 the gas flow was reversed and entered just below the grate and exited at the top of the reactor. A supplementary cooling coil covering about 4 in. of the length of the vessel was attached to the bottom of the reactor vessel for run 6.

The effluent gases from the reactor then passed into a separate vessel containing a sintered metal filter for removing particles suspended in the gas. The filter for run 1 was of stainless steel with 20-μ openings and had 0.3 ft^2 of external area. The filter for the subsequent runs was of sintered nickel with 35-μ openings and had 1 ft^2 of external area.

After passing through the filter, the effluent passed through a pressure control valve and a wet test meter before entering the building off-gas. A system pressure of 15 psig was maintained during all runs in order to facilitate sampling of the off-gas.

5.2 Fluorination Step

In each run, the ash resulting from the oxidation step was contacted in place with fluorine at 400°C. The effluent, containing UF_6, NbF_5, O_2, and unreacted F_2, passed through the metal filter, which was maintained at 300°C except during run 1, where the filter was bypassed. The gas stream then passed into a series of NaF beds operated at 400 to 500°C and at 100°C, depending on the substance to be sorbed. The NaF was conditioned prior to the run by contact with a low flow of fluorine at 400°C for 1 hr. Niobium pentafluoride was removed in the 400°C beds and UF_6 in the 100°C beds. Fluorine was removed from the gas stream by a soda-lime bed.

6. CONCLUSIONS AND RECOMMENDATIONS

6.1 Conclusions

The following conclusions may be drawn from the data presented:

1. Recovery of uranium from Kiwi fuel, with uranium losses of about 0.1%, is feasible by the oxidation-fluorination process described here.

2. Reactor wall temperatures can be easily controlled during oxidation and fluorination.

3. Carbon monoxide concentration in the effluent can be controlled by maintaining an excess of oxygen in the effluent.

4. The ash from the oxidation step remains in the vessel and is essentially intact.

5. Oxygen utilization ranges from 20 to 45% and fluorine utilization ranges from 15 to 60%. Utilization of both gases should increase with larger bed heights.

6.2 Recommendations

Recommendations for further evaluation of the process include:

1. Use of a larger reactor both in diameter and height in order to properly assess the problems of scaleup.

2. Use of zoned heating and cooling of the reactor for better temperature control.

3. Use of zoned introduction of reactant gases.

4. Further work on uranium-niobium separation by NaF sorption in order to reduce uranium losses.

5. Study of other solid sorbents for NbF_5, with the possibility of desorption in order to recover the niobium.

6. Evaluation of other methods for separating UF_6 and NbF_5, such as by distillation, which would allow recovery of the niobium.

7. Development of procedures for analyzing the effluent from the fluorination step.

8. Further work is needed on fluorination and/or recovery of material retained on the filter.

9. Investigation of other methods for control of carbon monoxide, such as by the introduction of air or oxygen at the exit of the fuel bed.

10. Investigation of methods for periodically removing residues from the reactor resulting from corrosion and from nonvolatile materials in the fuel.

7. REFERENCES

1. C. D. Scott, L. E. McNeese, and J. C. Suddath, Processing of Graphite Fuels for Uranium Recovery by Oxidation and Fluorination, ORNL-TM-185 (1962).

2. C. D. Scott, Feasibility of the Oxidation of Graphite-Uranium Fuels with Oxygen. Preliminary Results, ORNL-CF-62-2-35 (February 1962) (Confidential).

3. R. H. Harrison, The Direct Fluorination of Belgium Congo Ore, K-819 (Sept. 20, 1951) (declassified Feb. 25, 1957).

8. APPENDIX: ENGINEERING FLOWSHEET

The engineering flowsheet with instrumentation for the experimental facility is shown in Fig. 8.A, and Table 8.A gives the description of the system instrumentation as shown in the engineering flowsheet.

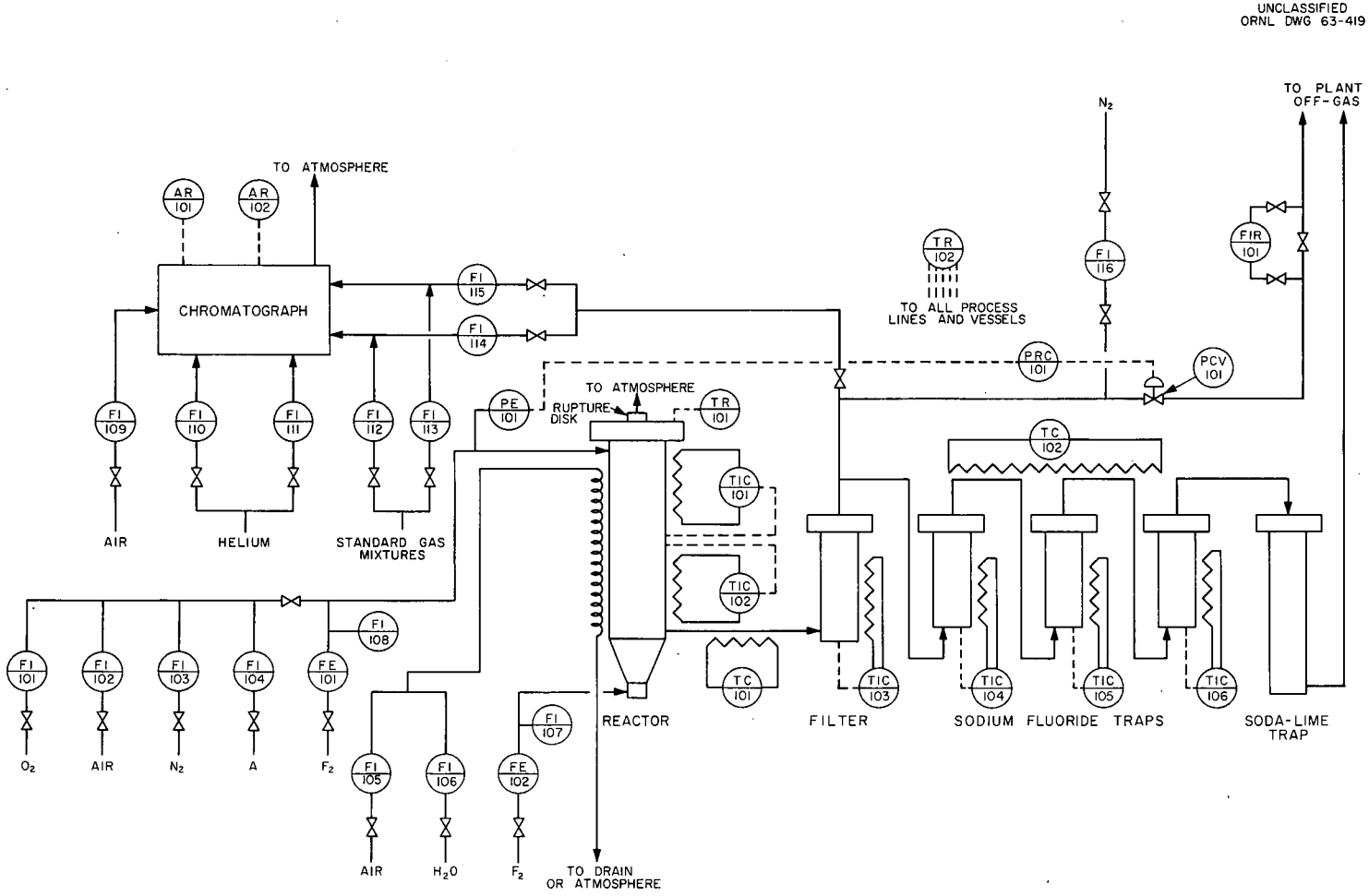

Fig. 8.A. Engineering Flowsheet, with Instrumentation, for the Oxidation-Fluorination Apparatus Used in the Recovery of Uranium from Spent Graphite-Uranium Carbide Fuel (Kiwi-B-1B).

Table 8.A Instrumentation Specifications for Apparatus Used in the Recovery of Uranium from Prototype Kiwi-B-1B Fuel

Instrument Identification	Specifications
AR-101	Continuous recording potentiometer: 0-10 mv
AR-102	Continuous recording potentiometer: 0-10 mv
FE-101	Capillary tube: 0.5-5 slm F_2
FE-102	Capillary tube: 0.1-1 slm FE
FI-101	Rotameter: 5-50 slm O_2
FI-102	Rotameter: 5-50 slm air
FI-103	Rotameter: 5-50 slm N_2
FI-104	Rotameter: 5-50 slm Ar
FI-105	Rotameter: 5-50 air
FI-106	Rotameter: 1-10 slm H_2O
FI-107	Pressure gauge: 0-30 psig
FI-108	Pressure gauge: 0-30 psig
FI-109	Rotameter: 0.01-0.1 slm air
FI-110	Rotameter: 0.01-0.1 slm He
FI-111	Rotameter: 0.01-0.1 slm He
FI-112	Rotameter: 0.01-0.1 slm CO_2
FI-113	Rotameter: 0.01-0.1 slm CO_2
FI-114	Rotameter: 0.025-0.25 slm CO_2
FI-115	Rotameter: 0.025-0.25 slm CO_2
FI-116	Rotameter: 2.5-25 slm N_2
FIR-101	Wet test meter: 5-50 slm
PCV-101	Pneumatic control valve: 5-50 slm at 3-30 psig
PE-101	Differential pressure cell: 0-30 psig
PRC-101	Pneumatic controller-recorder, miniature: 3-18 psig input-output

Table 8.A (Continued)

Instrument Identification	Specifications
TC-101	Variable voltage control: 0-110 v
TC-102	Variable voltage control: 0-110 v
TIC-101	Temperature indicator-controller with variable voltage control: 0-800°C at 0-220 v
TIC-102	Temperature indicator-controller with variable voltage control: 0-800°C at 0-220 v
TIC-103	Temperature indicator-controller with variable voltage control: 0-400°C at 0-110 v
TIC-104	Temperature indicator-controller with variable voltage control: 0-400°C at 0-110 v
TIC-105	Temperature indicator-controller with variable voltage control: 0-400°C at 0-110 v
TIC-106	Temperature indicator-controller with variable voltage control: 0-400°C at 0-110 v
TR-101	12-point temperature recorder: 0-1650°C with Pt vs Pt-Rh thermocouples
TR-102	12-point temperature recorder: 0-1200°C with Chromel-Alumel thermocouples

ORNL-3434
C-44b — Nuclear Technology-Chemistry
and Chemical Engineering
M-3679 (30th Ed.)

INTERNAL DISTRIBUTION

1. Biology Library
2-4. Central Research Library
5. Reactor Division Library
6-7. ORNL — Y-12 Technical Library
Document Reference Section
8-17. Laboratory Records Department
18. Laboratory Records, ORNL R.C.
19. R. E. Blanco
20. R. E. Brooksbank
21. W. L. Carter
22. F. L. Culler
23. D. A. Douglas
24. H. E. Goeller
25. R. W. Horton
26. S. Katz
27. C. E. Larson
28. W. D. Manly
29. L. E. McNeese
30. F. L. Peishel
31. A. M. Perry
32. J. B. Ruch
33. G. Samuels
34. C. D. Scott
35. M. J. Skinner
36. Albert Spaller
37. J. A. Swartout
38. A. M. Weinberg
39. M. E. Whatley
40. P. H. Emmett (consultant)
41. J. J. Katz (consultant)
42. T. H. Pigford (consultant)
43. C. E. Winters (consultant)

EXTERNAL DISTRIBUTION

44. Ted Workinger, Production Division, Atomic Energy Commission, Washington
45. Arnold Ayres, Phillips Petroleum Company, Idaho
46. Research and Development Division, AEC, ORO
47-241. Given distribution as shown in M-3679 (30th Ed.) under Nuclear Technology-Chemistry and Chemical Engineering category