MARTIN MARIETTA ENERGY SYSTEMS LIBRARIES
3 4456 0284879 2

CENTRAL RESEARCH LIBRARY
DOCUMENT COLLECTION

ORNL-3685
UC-37 – Instruments
TID-4500 (32nd ed.)

A REACTIVITY COMPUTER FOR USE WITH NUCLEAR REACTOR CONTROL SYSTEMS (Thesis)

L. C. Oakes

CENTRAL RESEARCH LIBRARY
DOCUMENT COLLECTION
LIBRARY LOAN COPY
DO NOT TRANSFER TO ANOTHER PERSON
If you wish someone else to see this document, send in name with document and the library will arrange a loan.

OAK RIDGE NATIONAL LABORATORY
operated by
UNION CARBIDE CORPORATION
for the
U.S. ATOMIC ENERGY COMMISSION

Printed in USA. Price: $1.25 Available from the
Office of Technical Services
U. S. Department of Commerce
Washington 25, D. C.

LEGAL NOTICE

This report was prepared as an account of Government sponsored work. Neither the United States, nor the Commission, nor any person acting on behalf of the Commission:

A. Makes any warranty or representation, expressed or implied, with respect to the accuracy, completeness, or usefulness of the information contained in this report, or that the use of any information, apparatus, method, or process disclosed in this report may not infringe privately owned rights; or

B. Assumes any liabilities with respect to the use of, or for damages resulting from the use of any information, apparatus, method, or process disclosed in this report.

As used in the above, "person acting on behalf of the Commission" includes any employee or contractor of the Commission, or employee of such contractor, to the extent that such employee or contractor of the Commission, or employee of such contractor prepares, disseminates, or provides access to, any information pursuant to his employment or contract with the Commission, or his employment with such contractor.

ORNL-3685

Contract No. W-7405-eng-26

Instrumentation and Controls Division

A REACTIVITY COMPUTER FOR USE WITH NUCLEAR REACTOR CONTROL SYSTEMS

L. C. Oakes

Submitted as a thesis to the Graduate Council of The University of Tennessee in partial fulfillment of the requirements for the degree of Master of Science

SEPTEMBER 1964

OAK RIDGE NATIONAL LABORATORY
Oak Ridge, Tennessee
operated by
UNION CARBIDE CORPORATION
for the
U.S. ATOMIC ENERGY COMMISSION

MARTIN MARIETTA ENERGY SYSTEMS LIBRARIES

3 4456 0284879 2

ACKNOWLEDGMENTS

The work covered in this report was performed under the supervision of E. P. Epler in the Reactor Controls Department, Instrumentation and Controls Division of the Oak Ridge National Laboratory. The thesis was supervised by J. F. Pierce of the Electrical Engineering Department, University of Tennessee. The author wishes to express his gratitude to E. R. Mann of the Reactor Controls Department for his many helpful suggestions and to the many other members of the department, especially F. S. Burns and M. A. Meacham, who have assisted in the work.

TABLE OF CONTENTS

ACKNOWLEDGMENTS ii

ABSTRACT iv

INTRODUCTION 1

FACTORS CAUSING CHANGES IN REACTIVITY 4

TEMPERATURE COEFFICIENT 4

FUEL DEPLETION 4

FISSION PRODUCT POISONING 5

THE COMPUTER 10

EXPERIMENTAL RESULTS 26

CONCLUSIONS 30

REFERENCES 31

APPENDIX I 33

APPENDIX II 41

ABSTRACT

An electromechanical analog computer for computing relatively slow changes in reactivity in a high-power-density thermal reactor is described. Analytic expressions in the form of differential equations describing fission product poisoning and fuel depletion are given. The analog computer has been designed to provide solutions to these differential equations.

Design criteria are given. A functional block diagram and considerable design details of the computer are also given.

Results of several tests indicate that the percentage of error in computed reactivity is no greater than 3.2. This maximum error occurred in an overall operating time of 8.85 hours.

INTRODUCTION

The capability of a nuclear reactor to sustain operation at rated power depends upon the amount of U^{235} over and above that necessary to make a critical geometry that is loaded in the core at the time operation commences. The extra U^{235} results in excess reactivity which must be counteracted by neutron absorbers. The absorbers, commonly called "control rods," are installed in such a manner that they can be moved to vary their effective absorption. Thus, by moving the rods, it is possible to compensate for the effects of fuel depletion, fission product poisoning and other effects which change the neutron multiplication of the reactor. The reactor power is an extremely non-linear function of rod position. Since moving the control rods results in gross changes in reactivity, the motion must be made sufficiently slow that the response of the reactor is no faster than the response time of the reactor safety system.

To regulate the reactor power a servo controlled absorber, called a regulating rod, having a relatively fast speed is employed. The potentially hazardous effects of the fast speed of this regulating rod on reactor safety may be decreased by limiting the stroke of the rod. As a consequence, in compensating for fuel depletion and fission product poisoning, the regulating rod will ultimately reach the end of its stroke. A readjustment of the control rod complex is then necessary to restore the regulating rod to a position of control. In order that the benefits of limiting the regulating rod are not nullified, the control rods must be readjusted only when justified by the depletion of fuel and changes in

fission product poison concentration. There are many other effects which may cause changes in the core reactivity. For example, changing the position of the fuel elements within the core region or introducing foreign material into the core may cause the reactivity to decrease. If the decrease is slow the effects can be compensated by withdrawing the regulating rod. If large slow decreases of reactivity occur it may even become necessary to move the control rods to maintain the desired operating power. Since the reactivity is changing in an uncontrolled fashion, it is possible that it may return to normal in a very short time and thereby introduce transient power excursions which could destroy the core.

At present the reactor operator must decide when a request for control rod withdrawal is justified by predictable losses of reactivity. The operator may, as a result of past experience, make a good estimate of reactivity changes if the reactor power is raised to a known level and kept there constantly. However, a slight perturbation in power level in a reactor having a high core neutron flux causes the reactivity to change in a complex manner. Under these conditions the reactor operator can only guess at the resulting change in reactivity. If one constructs a computer which continuously calculates the loss of reactivity due to fission product poison and fuel depletion using fission rate as a driving function, a permissive signal can be generated which will insure that the control rods are not readjusted on spurious losses of reactivity from other causes.

The purpose of this study is to design and test an analog computer capable of calculating the changes in reactivity with an over-all accuracy of 5 per cent or better. Since an operating cycle is ten days, the over-all

accuracy must include the effects of long-term as well as short-term instabilities and inaccuracies. For this study a reactor having the following properties will be used as a model.

1. Design operating power - 100 Mw
2. Excess reactivity - 14 per cent
3. Control rod worth - 28 per cent
4. Regulating rod worth 0.5 per cent
5. Temperature coefficient of reactivity $1 \times 10^{-4}/^{\circ}F$
6. Core life at full power = 10 days

Reactivity is given the symbol ρ where:[1]

$$\rho \equiv \frac{K_{eff} - 1}{K_{eff}}$$

K_{eff}, the core multiplication, is the ratio of the number of neutrons at the end of a generation to the number at the beginning of the generation.

FACTORS CAUSING CHANGES IN REACTIVITY

There are three main effects which under normal operation result in a reduction of excess reactivity. They are:

1. Temperature coefficient
2. Depletion of fuel
3. Fission product poisoning

TEMPERATURE COEFFICIENT

The temperature coefficient for the reactor model being considered is $1 \times 10^{-4}/^{\circ}F$. Normally the coolant flow will be at its maximum value and the return water will be at a constant temperature. Under these conditions the mean temperature of the core will be constant as long as the power is held constant. Once having reached equilibrium at the start of a run there will be no further change in reactivity due to temperature effects. Since the temperature effect is not time variant it was not included in the present study. In a practical application the output of a temperature-to-voltage transducer could be introduced directly into the computer since the loss of reactivity is a linear function of temperature.

FUEL DEPLETION

Fuel depletion occurs due to the consumption of U^{235} by the fission process at the rate of approximately one gram of U^{235} per megawatt day. Our interest, however, is in the manner in which the fuel loss changes ρ and from the reactor model it can be seen that one gram of fuel loss is equivalent to 0.9 per cent since we must operate for ten days at 100 Mw

with an available ρ of 9 per cent (approximate - after xenon reaches equilibrium). As long as the power is held constant, the depletion proceeds at a linear rate until the usable fuel is exhausted. The depletion in terms of loss of reactivity, is expressed mathematically as follows:

$$\frac{d\rho}{dt} = k\Sigma f\phi \qquad (1)$$

where

ρ = reactivity

$\Sigma f\phi$ = fission rate

k = constant

FISSION PRODUCT POISONING

When a reactor operates certain nuclei having a large capture cross section to thermal neutrons are produced. As far as the operation of the reactor is concerned, the most important nuclei which are born in this manner are xenon-135 and samarium-149. The rate at which these nuclei are formed depends only on the rate at which fissions are occurring in the fuel. However, the rate of removal depends upon their natural radioactive decay rate and by neutron capture which converts them into elements of lower cross section.

When the reactor operates at a steady fission rate, and hence a steady power rate, a balance between the rate of formation and the rate of loss of these nuclei will exist after a transient period. For this condition, an equilibrium poison concentration exists in the fuel. When the reactor power is raised or lowered the poison nuclei go through a

transient and, as shall be shown, the peak Xe concentration obtained after a complete shutdown in power may rise many times higher than the equilibrium value.

The reactor generates Xe by the following two methods:[1]

1. As a direct fission yield with a fraction of .003 atoms per fission.
2. As a radioactive decay chain starting with tellurium 135 which has a yield fraction of .056 atoms per fission. Starting with the Te^{135} a succession of negative beta decays produces stable Ba^{135} as follows:

$$Te^{135} \xrightarrow{\text{2 min.}} I^{135} \xrightarrow{\text{6.7 hours}} Xe^{135} \xrightarrow{\text{9.2 hours}} Cs^{135} \xrightarrow{2\times10^4 \text{ years}} Ba^{135}$$

The Xe^{135} has the higher cross section to the absorption of thermal neutrons.

Since the time constant of Te^{135} is only 2 minutes we may assume that the I^{135} is generated directly from fission. This assumption will lead to a negligible error since the time constant for I^{135} is 6.7 hours.

Let I represent the concentration of I^{135} nuclei per cm^3. If λ_1 is the radioactive decay constant, the loss of I^{135} by this mechanism will be $\lambda_1 I$. In addition I^{135} will be lost as a result of neutron capture at a rate of $\sigma_1 \phi I$ where $\sigma_1 \phi$ is proportional to the neutron flux and the I^{135} absorption cross section. As mentioned previously, the generation rate depends only on the number of fissions. If the fission rate is $\Sigma f \phi$ fissions per cm^3 per second the generation rate is $\gamma_1 \Sigma f \phi$ where γ_1 is the fractional yield of I^{135} (actually Te^{135}). Therefore, an equation relating the net rate of increase of I^{135} nuclei and time is

$$\frac{dI}{dt} = -\lambda_1 I - \sigma_1 \phi I + \gamma_1 \Sigma f \phi \qquad (2)$$

The cross section σ_1 for I is 7×10^{-24} cm^2 and the value of ϕ[1] is never more than 10^{15} neutrons/cm^2/sec, the value of $\sigma_1\phi$ will be approximately 10^{-8} sec^{-1}. On the other hand, the value of λ_1[1] is given as 2.9×10^{-5} sec^{-1}. We may, therefore, neglect $\sigma_1\phi$ since its omission results in an error of one part in 3000 which is not in the range of accuracy anticipated for the computer. Equation (2) now becomes:

$$\frac{dI}{dt} = -\lambda_1 I + \gamma_1 \Sigma f \phi \qquad (3)$$

The solution of Equation (3) for step changes in ϕ is:*

$$I(t) = \frac{\gamma_1 \Sigma f \phi_0}{\lambda_1} [1 - e^{-\lambda_1 t}] + I_o e^{-\lambda_1 t} \qquad (9)$$

Let X represent the concentration of Xe^{135} nuclei per cm^3. If λ_2 is the radioactive decay constant, Xe^{135} will be lost at a rate $\lambda_2 X$ nuclei per cm^3 per second. In addition, Xe^{135} will be lost to neutron capture at a rate of $\sigma_2 \phi X$ nuclei per cm^3 per second, where σ_2 is a constant and ϕ is the thermal neutron flux. Xenon-135 will be produced from the radioactive decay of I^{135} as shown in Equation (4) at a rate of $\lambda_1 I$ nuclei per cm^3 per second. A few percent of the total steady state Xe^{135} will be produced as a fission product at a rate of $\gamma_2 \Sigma f \phi$ where γ_2 is the fractional yield of Xe^{135}. The net rate of growth of the Xe concentration is given by:

$$\frac{dX}{dt} = \lambda_1 I + \gamma_2 \Sigma f \phi - \lambda_2 X - \sigma_2 \phi X$$

---

*See Appendix I.

Assuming that the flux ϕ reaches its final value in a period that is short with respect to the Xe time constants we may assume ϕ to be a constant ϕ_o and the solution of the above equation is:*

$$X(t) = X_o\left\{1 + \frac{1}{(\gamma_1+\gamma_2)}\left[\frac{\lambda_1\gamma_1}{\lambda_2-\lambda_1+\sigma_2\phi_o} - \gamma_2\right]e^{-(\lambda_2+\sigma_2\phi_o)t} - \frac{\gamma_1(\lambda_2+\sigma_2\phi_o)}{(\gamma_1+\gamma_2)(\lambda_2-\lambda_1+\sigma_2\phi_o)}\, e^{-\lambda_1 t}\right\} \tag{13}$$

If after having generated some finite amount of I and Xe, the flux is rapidly changed to another value the equation for the value of Xe as a function of time is:*

$$X(t) = X_{om} - \left[X_{om} + \frac{\gamma_1\Sigma f(\phi_o-\phi m)}{\lambda_2-\lambda_1+\sigma_2\phi m} - X_o\right]e^{-(\lambda_2+\sigma_2\phi_m)t} + \frac{\gamma_1\Sigma f(\phi_o-\phi_m}{\lambda_2-\lambda_1+\sigma_2\phi_m}\, e^{-\lambda_1 t} \tag{16}$$

As mentioned previously, when the neutron flux is reduced the Xe concentration as a function of time exhibits a peaking. Consider the case for which the neutron flux is reduced to zero. Under these conditions the loss of Xe is due solely to radioactive decay at a rate of $\lambda_2 X$ nuclei per cm^3 per second while the growth is due to the radioactive decay of I at a rate of $\lambda_1 I$ nuclei per cm^3 per second. Since the half life of Xe is longer than that of I, the Xe concentration will reach a peak after shutdown. By differentiating Equation (16) with respect to time and setting the derivative equal to zero the time t_p required for the Xe to reach a peak can be found.*

---

*See Appendix I.

$$t_p = \frac{\ln \left(\lambda_2+\sigma_2\phi_m\right)\left[X_{om} + \frac{\lambda_1\Sigma f(\phi_o-\phi_m)}{\lambda_2-\lambda_1+\sigma_2\phi_m} - X_o\right] \Big/ \lambda_1\left[\frac{\lambda_1\Sigma f\phi(\phi_o-\phi_m)}{\lambda_2-\lambda_1+\sigma_2\phi_o}\right]}{\lambda_2-\lambda_1+\sigma_2\phi_m} \qquad (17)$$

The poisoning, P, of a reactor is defined as:

$P \equiv \frac{\Sigma p}{\Sigma u} = \frac{X_t\sigma_2}{\Sigma u}$ where Σp and Σu are macroscopic cross sections.

This poisoning is the ratio of the thermal neutrons absorbed in the poison, in this case Xe, to those absorbed in the fuel. When $X_{(t)}$ has a value of

$$X_o = \frac{(\lambda_1+\lambda_2)\Sigma f\phi_o}{\lambda_2+\sigma_2\phi_o}$$

then

$$P = \frac{\sigma_2(\lambda_1+\lambda_2)\Sigma f\phi_o}{(\lambda_2+\sigma_2\phi_o)\Sigma u}$$

where $\frac{\Sigma f}{\Sigma u} = .84$ for our model.[2]

$$P = \frac{.84\ \sigma_2\ (\gamma_1+\gamma_2)\phi_o}{(\lambda_2+\sigma_2\phi_o)} \qquad (5)$$

It has been shown[1] that the reactivity change ρ as a result of the poisoning P is given by:

$$\rho = \frac{P}{1+y} \qquad (6)$$

In Equation (6) the value for y is a very small fraction of unity (approximately 1/100)[1] in highly enriched reactors such as the model used in this study. Therefore,

$$\rho \approx P$$

Since the purpose of this work is a feasibility study Sm will not be included. In a complete analysis, a channel similar to that for the Xe with the appropriate constants could be added.

THE COMPUTER

A computer meeting the requirements needed to generate reliable shim permissive information must have the following characteristics:

1. Good inherent accuracy in order that the accuracy of the output information will not be significantly different from that of the input signal.
2. The information stored in the memory unit must not be altered by transient variations of the supply voltages.
3. Good continuous-service reliability.

A functional diagram of the computer is shown in Figure 1.

A signal proportional to $\Sigma f\phi$ is generated by an ionization chamber[2] which supplies a current proportional to the rate at which fission is taking place in the core and hence by Equations (2) and (1) is proportional to the generation of I^{135} and the depletion of U^{235}. This current is converted to a voltage which drives a rate generator whose output shaft rotation ω_1 is proportional to the input voltage and thus proportional to $\Sigma f\phi$.

A signal that is proportional to fuel depletion is generated by integrating the shaft rotation ω_1. This is accomplished by driving a gear reducer having a ratio of 3,500:1 with the shaft rotating at a velocity of ω_1, see Figure 1. The output of the gear reducer is connected to a ten-turn potentiometer. The potentiometer is supplied with a reference voltage and is connected in the circuit so that the output voltage, e_f, is

$$e_f = K \int_0^t \omega_1 dt$$

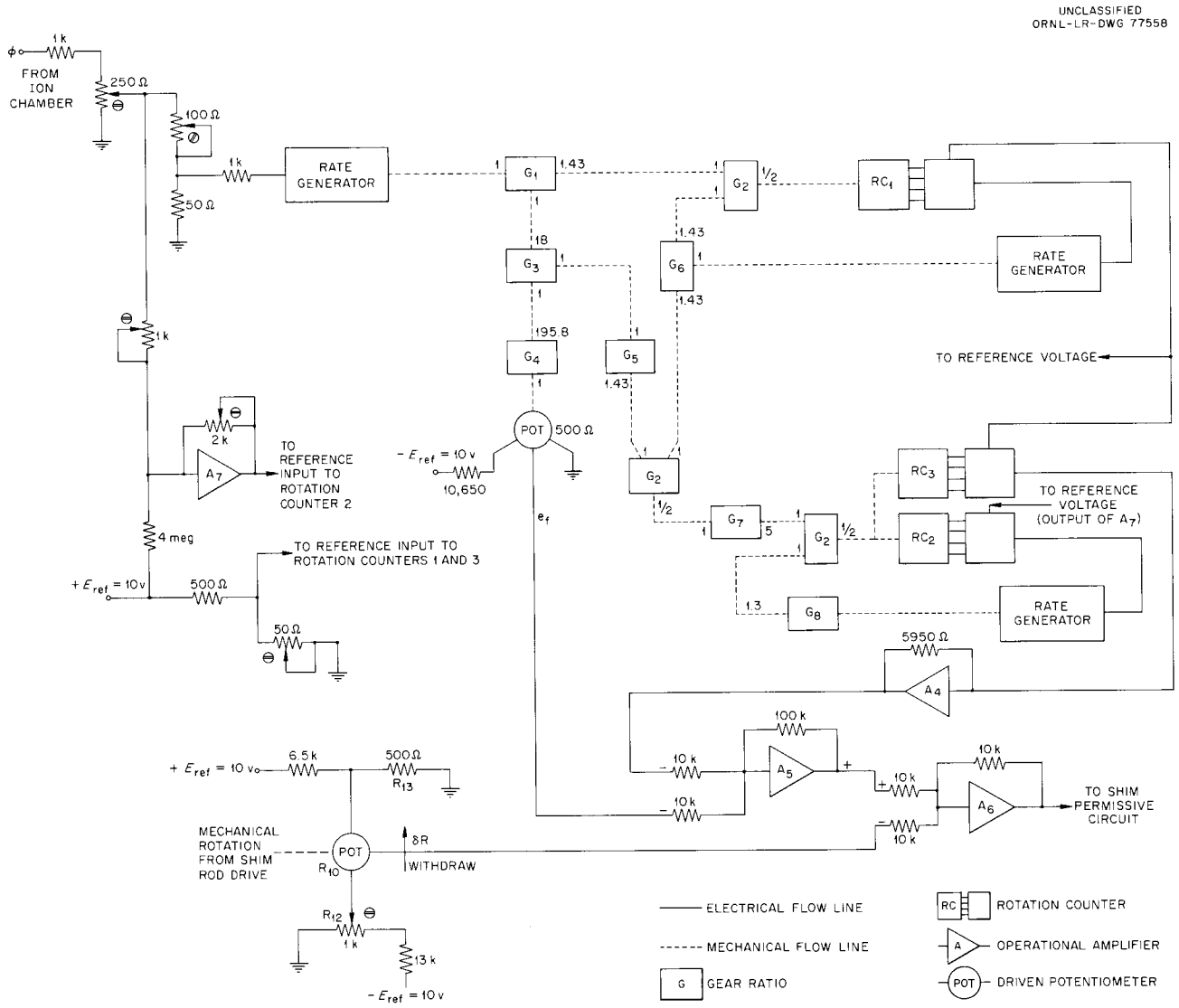

Fig. 1. Functional Block Diagram of the Computer

where K is an arbitrary constant chosen to make e_f proportional to ρ the reactivity change due to fuel depletion. Since:

$$\omega_1 = \Sigma f \phi$$

$$e_f = \rho = K \Sigma f \phi t$$

which is the solution of Equation (1) with $\phi = \phi_o$ = constant.

The shaft rotation may be used as a driving function in the solution of the I Equation (3) as follows: Let the shaft rotation ω_1 drive one input shaft of a differential gear whose output shaft is coupled to a rotation counter as shown in Figure 2. The rotation counter has a storage capacity of 999, i.e., the input shaft must be rotated 1000 turns to drive the counter to full capacity. Each digit wheel is equipped with a commutator and brush assembly which, in conjunction with a reference voltage, generates an electrical output proportional to the number registered. The electrical output of each significant digit is properly weighted and then summed to provide a gross electrical output proportional to the quantity stored in the register. The electrical output is used to drive a rate generator which rotates the second input shaft of the differential gear at a speed proportional to the quantity stored in the rotation counter.

Referring to Figure 2: ω_1 = input shaft No. 1 rotational velocity = rad/sec

ω_2 = input shaft No. 2 rotational velocity = rad/sec

ω_0 = output shaft rotational velocity = rad/sec

θ_0 = output shaft rotation = rad

θ_1 = input shaft No. 1 rotation = rad

θ_2 = input shaft No. 2 rotation = rad

UNCLASSIFIED
ORNL DWG. 64-7202

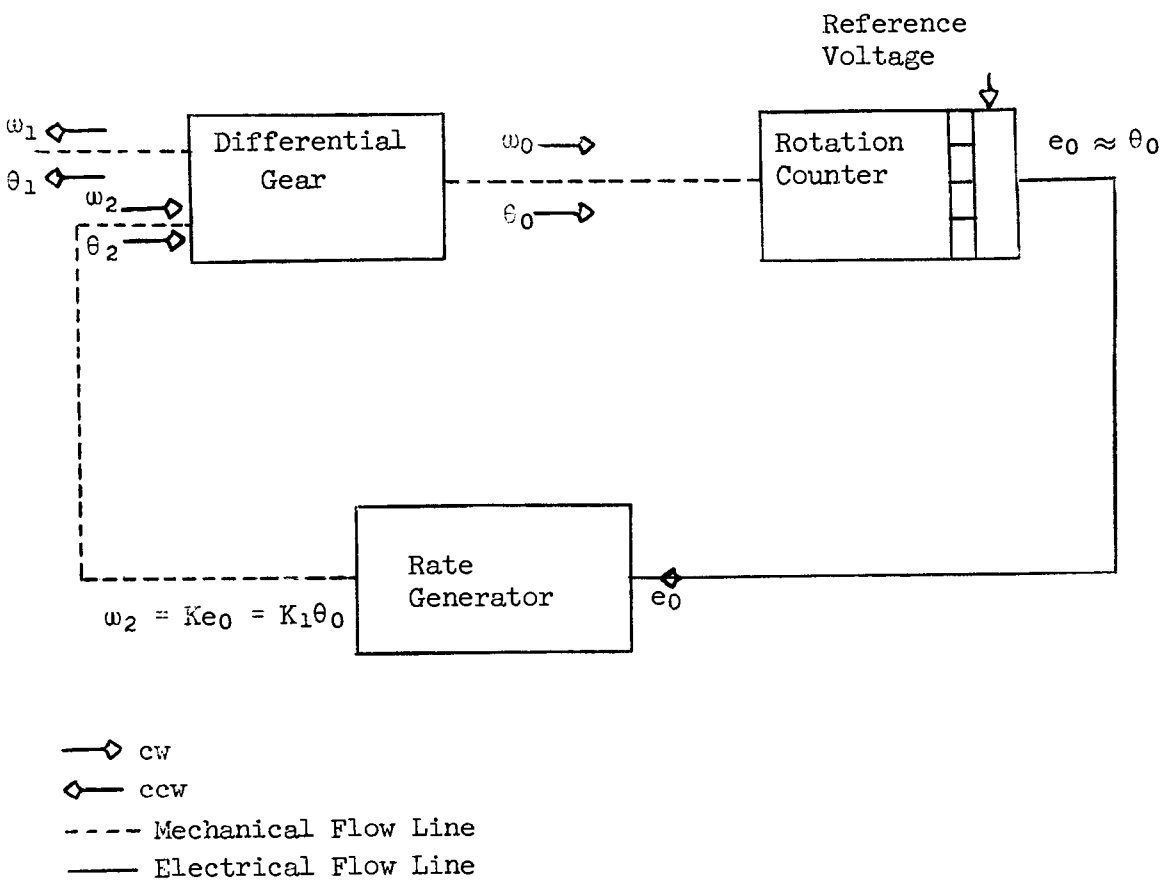

Fig. 2. Block Diagram of System to Solve Iodine Equation

The electrical output of the rotation counter drives the rate generator which generates an output rotational velocity of ω_2 radians/sec. ω_2 is proportional to e_0 such that $\omega_2 = Ke_0 = K_1\theta_0$. Assuming that the driving function ω_1 reaches its final value in a time which is short with respect to the system time constants it may be considered a constant in the following solution:

$$\theta_0 = \theta_1 - \theta_2$$

$$\theta_1 = \int \omega_1 dt$$

$$\theta_2 = \int \omega_2 dt$$

$$\theta_0 = \int \omega_1 dt - \int \omega_2 dt$$

$$\frac{d\theta_0}{dt} = \omega_1 - \omega_2 = \omega_1 - K_1\ \theta_0$$

which transforms to:

$$S\theta_0(s) - \theta_0(0+) = \frac{\omega_1}{S} - K_1\theta_0(s)$$

Assume $\theta_0(0+) = 0$

then:

$$S\theta_0(s) = \frac{\omega_1}{S} - K_1\theta_0(s)$$

$$\theta_0(s) = \frac{\omega_1}{S(S+K_1)}$$

$$\theta_0(t) = \frac{\omega_1}{K_1}\left[1-e^{-K_1 t}\right] \qquad (7)$$

Define:

$$\omega_1 \equiv \gamma_1 \Sigma f \phi_0$$

$$K_1 \equiv \lambda_1$$

then:

$$\theta_0(t) = \frac{\gamma_1 \Sigma f \phi_0}{\lambda_1}\left[1-e^{-\lambda_1 t}\right] \text{ which from Equation (9) } = I$$

Also:

$$-\omega_2 = -K_1\theta_0 = -\lambda_1 I$$

Thus, the differential input shaft No. 2 is rotating at a rate of $-\lambda_1 I$ rad/sec. Since $-\lambda_1 I$ represents a loss of I, the direction of rotation of the shaft is opposite that of shaft 1 which represents a growth of I. When equilibrium is reached as given by Equation (7) the differential input shafts are rotating at the same speed but in opposite directions. The output shaft speed is given above as:

$$\frac{d\theta_0}{dt} = \omega_1 - K_1\theta_0$$

Since,

$$\omega_1 \equiv \gamma_1 \Sigma f \theta_0$$

$$K_1 \equiv \lambda_1$$

$$\frac{d\theta_0}{dt} = \gamma_1 \Sigma f \phi - \lambda_1 I$$

which is seen to be $\frac{dI}{dt}$ from Equation (3).

The driving function for the Xe generator is $\lambda_1 I + \gamma_2 \Sigma f \phi$ as given by Equation (4). The $\lambda_1 I$ term is obtained from the output of the I rate generator. The same input as that used to drive the I generator may be used to provide the $\gamma_2 \Sigma f \phi$ term. The shaft rotating at $\Sigma f \phi$ is scaled by the constant γ_2 and combined in a differential adder with $\lambda_1 I$ to provide the required input $\lambda_1 I + \gamma_2 \Sigma f \phi$.

The principle of operation of the Xe generator is similar to that for the I generator described above but contains an additional removal term due to neutron capture. The additional term is generated by varying

the reference voltage to the Xe rate generator in such a manner that the output of the rate generator will represent the loss from neutron capture $\sigma_2\phi$ as well as radioactive decay λ_2. This can be accomplished by applying a reference voltage proportional to $(\lambda_2 + \sigma_2\phi)$. The value of λ_2 is constant while the magnitude of $\sigma_2\phi$ depends upon the value of ϕ. Thus, the current flowing from RC2 has a component due to Xe and a component due to the product of Xe and flux, ϕ. Since the circuitry driven by the Xe generator must have a current proportional to Xe the output of RC2 cannot be used. To generate a signal proportional to Xe a second rotation counter, RC3, is driven synchronously with RC2. A reference voltage is applied to RC3 and a current proportional to the Xe stored flows into the input of amplifier A_4 which is operating as a current to voltage converter. The output of A_4 is combined with a voltage proportional to the loss of reactivity due to fuel depletion and applied to the input of amplifier A_5. This amplifier is operating as a summing amplifier. The output of amplifier A_5, the total loss of reactivity, is compared to the gain of reactivity due to rod motion as indicated by rod position. The sum of these variables is generated in the output of amplifier A_6. The difference between the loss of reactivity by poison and fuel depletion and the gain due to rod withdrawal should be zero if no spurious changes in reactivity occur. Thus, the control system is granted permission to withdraw the control rods at the request of the servo system only if the difference indicated by amplifier A_6 remains small.

The dynamic ranges of A_4 and A_5 are set by observing that the total loss of reactivity due to fuel depletion and Xe growth may be as high as

39 per cent. Fourteen per cent of this is due to fuel depletion while the Xe peak may reach 25 per cent. The practical maximum allowable amplifier output is 10v, therefore 1 per cent is represented at the output of amplifier A_5 by $\frac{10}{39}$ = .256 volts. The total Xe induced swing at the output of A_5 is therefore 6.41 volts. The swing due to fuel depletion is 3.59 volts. Since A_5 has a gain of ten the corresponding input voltages at A_5 are 0.641 volts for the Xe and 0.359 volts for the fuel depletion. The feedback resistor for A_4 must be selected to supply a voltage of 0.641 volts when the input current is $\frac{e_{ref}}{595}$. Five hundred and ninety-five ohms is the value of the parallel combination of rotation counter resistances when the value 999 is stored. The reference voltage is the same as that used for the I generator, viz. 0.0641 volts. A_4 feedback resistor must therefore be $\frac{0.641 \times 595}{0.0641} = 0.595 \times 10{,}000 = 5{,}950$ ohms. From the gear ratios shown in Figure 1, the fuel depletion potentiometer is seen to rotate eight turns for a fuel cycle of ten days. The variation in resistance over eight turns is 400 ohms. With a 10 volt reference voltage the current through the potentiometer should be $\frac{0.359}{400} = 0.897 \times 10^{-3}$ amps. Therefore the total series resistor must be $\frac{10}{0.897 \times 10^{-3}} = 11{,}150$ ohms. The series dropping resistor must be 11,150 - 500 = 10,650 ohms.

The three identical rate generators used in the computer are as shown in the functional diagram, Figure 3. As mentioned previously they convert a voltage or current, which is a function of time, into a shaft rotation having an angular velocity proportional to the input voltage or current. The proportionality must be sufficiently accurate that the

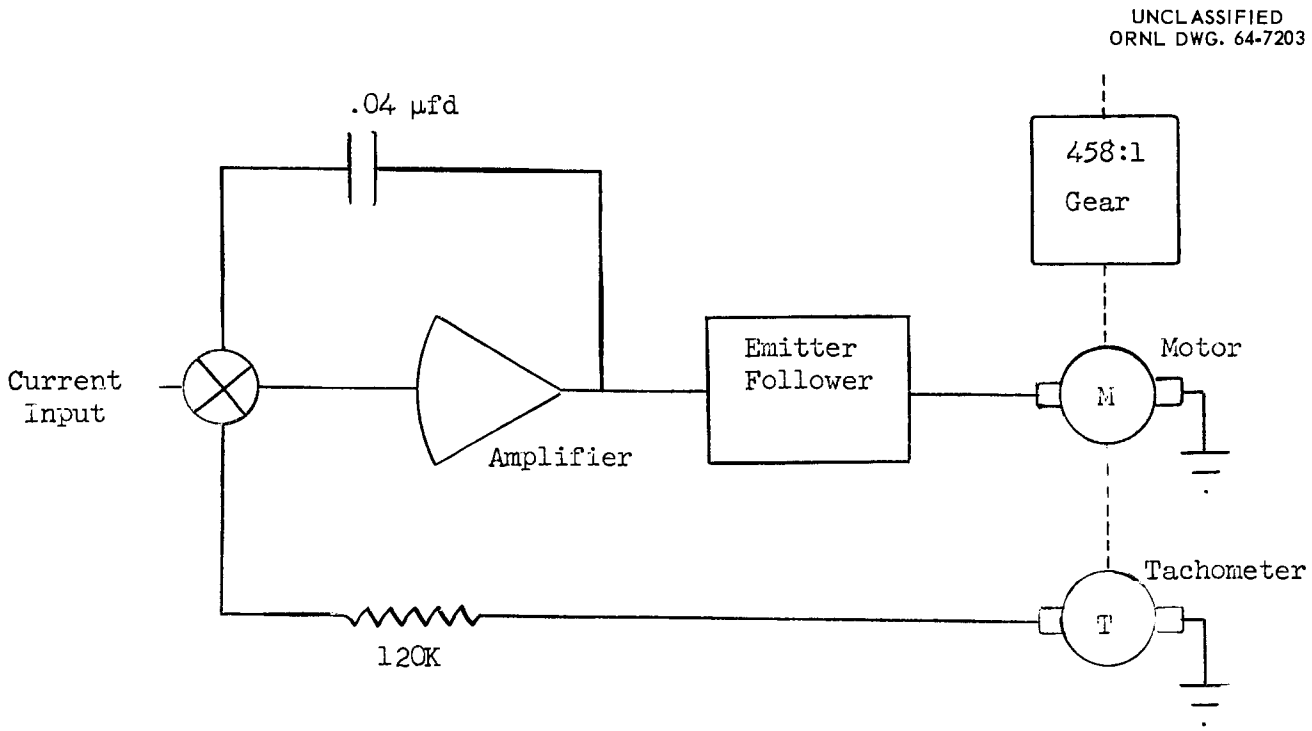

Fig. 3. The Rate Generator

over-all accuracy of the computer will be less than 5 per cent.

Each rate generator consists of a d-c motor directly coupled to a tachometer and to a planetary gear reducer having a ratio of 485:1. The d-c motor is driven by an amplifier and emitter follower having the following characteristics:

Open loop d-c gain = 3×10^7

Output voltage = ± 13 volts max.

Output current = ± 20 ma max.

Output impedance $\leq$ 0.01 ohm

Summing junction offset = 10 microvolts

Temperature drift (as unity gain inverter with 10K resistors) = 1/2 microvolt per °F

Integrator drift (with .01 μfd and 1K input resistor) = .0025 microvolts/second

The emitter follower has a current gain of 500 which will provide sufficient gain to drive the motor to 10 amps with a .02 amp input from the amplifiers.

The electromechanical rotation counter which is basically a multi-turn shaft encoder is shown in Figure 4 in the arrangement used for the I and Xe generators. The driving function ω_{in} is applied to one input of the differential gear. The output of this gear drives a 10:1 geneva gear. The output of the geneva drives the least significant digit of the counter. Each succeeding digit is driven from the preceding one by a 10:1 geneva gear which decreases the ambiguity problem normally associated with shaft encoders. If ω_{in} turns in a direction to increase the number stored in the

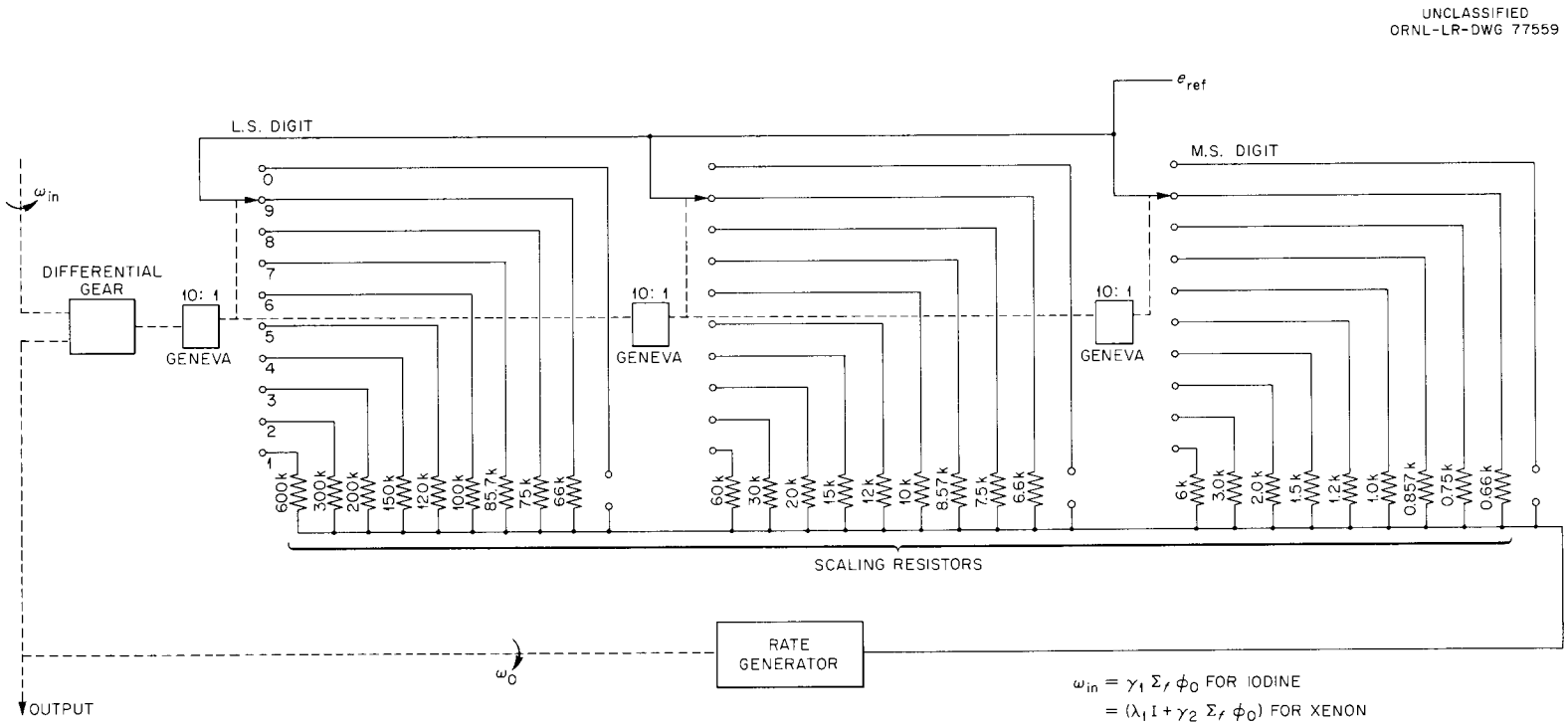

$\omega_{in} = \gamma_1 \Sigma_f \phi_0$ FOR IODINE
$= (\lambda_1 I + \gamma_2 \Sigma_f \phi_0)$ FOR XENON

$\omega_0 = \lambda_1 I$ FOR IODINE
$= (\lambda_2 X + \sigma_2 \phi X)$ FOR XENON

e_{ref} = 0.064 VOLTS FOR IODINE
= (SEE TEXT) FOR XENON

Fig. 4. Iodine or Xenon Generator Using an Electromechanical Rotation Counter.

counter, an increase in current to the rate generator and hence an increase in its output shaft speed ω_0 will occur. The value of the resistances of the three digits in parallel is inversely proportional to the number stored. The internal impedance of the reference voltage generator is 2 ohm for the I and .01 ohm for the Xe. The input impedance to the rate generator is .01 ohm. Since the lowest resistance developed by the rotation counter is the parallel combination of 660 ohms, 6600, and 66,000 ohms or 595 ohms, the error introduced by circuit loading is less than two parts in 595/2 or less than 1 per cent.

The required maximum speed of rotation of the inputs to the differential gears for the I, Xe, and power generators may be established as follows:

For the I system we may assume that the maximum allowable level of ϕ_0 cannot exceed 150 per cent of the normal full power value, and at 150 per cent power the maximum storage resistor capacity of 999 revolutions will be reached in steady state. The maximum rate of generation of I will occur if the flux ϕ_0 is stepped to the maximum value of 150 per cent in zero time. Under these conditions I will be generated as shown by Equation (9). The value of the derivative of Equation (9) at t = 0 is $\lambda_1[\frac{\gamma_1 \Sigma f \phi_0}{\lambda_1}]$. Where $\lambda_1 = 2.9 \times 10^{-5}$ sec^{-1}

$$\lambda_1[\frac{\lambda_1 \Sigma f \phi_0}{\lambda_1}] = \lambda_1(999) = 2.9 \times 10^{-5} \times 999 \text{ rev/sec} = .029 \text{ rev/sec}$$

$$= 1.74 \text{ rev/min}$$

The value of 1.74 rev/min is the speed to which the input to the I generator differential gear rises when the power is stepped to 150 per cent. In

steady state the output of the I rate generator must also be 1.74 rev/min. From Figure 5, 1.74 rev/min corresponds to a current of 1.07×10^{-4} amps. From Figure 4 the rotation counter resistance is the parallel combination of 660 ohms, 6.6K ohms, and 66K ohms resistors which is 595 ohms. From the resistance and current, the value of the I reference voltage can be found:

$$e_{ref} = 595 \times 1.07 \times 10^{-4} = .0641 \text{ volts.}$$

For the Xe system the shaft speed needed to follow the 150 per cent step in flux is no greater than that required for the I since 94 per cent of the Xe generator driving voltage comes from the decay of I. However, a more severe requirement exists for the Xe rate generator motor. Consider the case in which the flux has decayed to zero and the Xe has risen to its peak value. Although the peak Xe may rise to 50 to 70 per cent it is reasonable to limit the computer's ability to follow the peak to 25 per cent. Even though the reactor cannot be started under the most favorable conditions with more than 14 per cent Xe, the computer is designed to follow the rise to a higher value in the event the operator chooses to determine if the peak is low enough to permit a restart after a reasonable time delay. This condition might arise with a new core which has been shut down before steady state Xe has been reached. Again consider the case when the pile power has been lowered and the Xe has a maximum value of 25 per cent. If the power is raised rapidly to 150 per cent the Xe will be removed by radioactive decay at a rate of λ_2 and by neutron capture at a rate of $\sigma_2 \phi X$. Under these conditions the I will have essentially decayed. Thus, neglecting the Xe growth term will result in negligible error. Under these

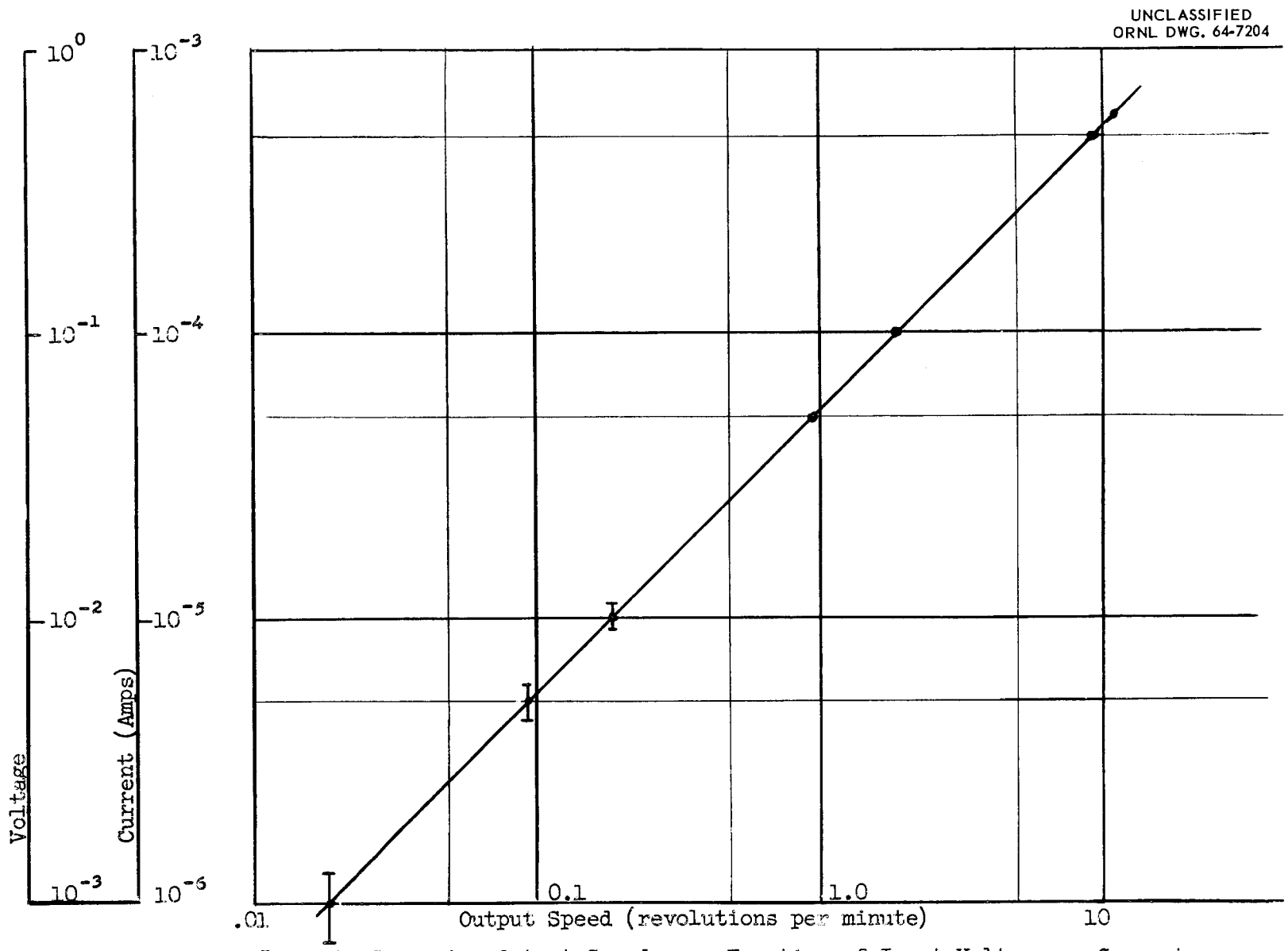

Fig. 5. Rate Generator Output Speed as a Function of Input Voltage or Current

conditions the rate of change of Xe may be written as:

$$\frac{dXe}{dt} + \lambda_2 Xe + \sigma_2 \phi Xe = 0$$

The transform of this equation is

$$SXe(s) - Xe(o+) + \lambda_2 Xe(s) + \sigma_2 \phi Xe(s) = 0$$

$$Xe(s)\ [S + \lambda_2 + \sigma_2\ \phi] = Xe(o+) = 25\% = 999 \text{ revolutions of the storage register.}$$

$$Xe(s) = \frac{Xe(c+)}{S+\lambda_2+\sigma_2\phi}$$

$$Xe(t) = Xe(o+)e^{-(\lambda_2+\sigma_2\phi)t}$$

The value of $\frac{dXe(t)}{dt}$ at $t = 0$ is $- Xe(o+)(\lambda_2-\sigma_2\phi)$

$$\left|\frac{dXe(t)}{dt}\right| = Xe(o+)(\lambda_2-\sigma_2\phi)$$

$$Xe(o+) = 999 \text{ rev}$$

$$\lambda_2 = 2.1 \times 10^{-5}$$

$$\sigma_2 = 3.5 \times 10^{-18}$$

$$\phi = 1.5 \times 3 \times 10^{14} = 4.5 \times 10^{14}$$

$$(\lambda_2+\sigma_2\phi) = 159.1 \times 10^{-5} \text{ sec}^{-1}$$

$$\left|\frac{dXe(t)}{dt}\right| = 999\ (159.1) \times 10^{-5} \text{ rev/sec} = 1.59 \text{ rev/sec} = 96.0 \text{ rev/min}$$

Since 96.0 rev/min exceeds the maximum range of the rate generator, a 1:10 gear was placed at the input to the rotation counter to reduce the maximum required speed of the rate generator to 9.6 rev/min. From Figure 5 the current corresponding to 9.6 rev/min is 5.8×10^{-4} amps. With 999 turns the resistance of the rotation counter is 595 ohms. Therefore the Xe reference voltage is found to be $595 \times 5.8 \times 10^{-4} = .345$ volts for a flux of 4.5×10^{14}. From the constants given above the invariant part of

the reference voltage can be found as follows:

$$0.345 \times \frac{\lambda_2}{\lambda_2+\sigma_2\phi_0} = 0.345 \times \frac{2.1 \times 10^{-5}}{159 \times 10^{-5}} = 0.0045$$

Referring to Figure 1 the output of amplifier A_7 will be 4-1/2 millivolts from the 10 volt reference plus a voltage proportional to the flux ϕ which varies from 0 to 0.341 as the flux varies from 0 to 4.5×10^{14} neutrons/cm^2/sec.

In the interest of keeping the fuel depletion integrator gear ratio as low as practical and still maintain a reasonable full power speed for the power rate generator, the output of the reactor power ($\Sigma f\phi$) rate generator was chosen to be that required by the I system; namely 1.74 rpm. The maximum response of the power rate generator need only be fast enough to follow the maximum rates of change of reactor power. For the reactor model to be examined the maximum anticipated rate of change of power is 5 megawatts per second. Since 1.74 rev/min represents 150 MW the rate generator must be capable of responding from 0 to full speed in 30 seconds. Obviously, speed of response is a trivial consideration.

EXPERIMENTAL RESULTS

The rate generator was tested for linearity by applying an input voltage to a 1K resistor connected to the summing junction of the rate generator amplifier. With voltages varying between 1 millivolt and 1 volt the rotation counter input rpm was measured. The results are tabulated in Table II Appendix II. The amplifier summing junction current, obtained by dividing the input voltage by the input resistance, is also shown in Table II. From these data the curve shown in Figure 5 was produced. This curve indicates that the linearity of the rate generator is excellent over a range of three decades.

The computer was assembled and placed in operation with a simulated reactor power level of 100 MW. After the computer was started, the values registered in the I and Xe registers as a function of time are shown in Appendix II, Table I. Also shown in Table I is the calculated values for I and Xe. These values were obtained by substituting values for ϕ and t in Equation (9) for the I and Equation (13) for the Xe. The measured values are plotted in Figure 6.

After the I and Xe had reached their equilibrium values the power was quickly reduced to approximately one-half the original value. The actual measured value of the new level was 56 per cent of the original 100 megawatts. Table I of Appendix II shows the measured and calculated values of I and Xe after the change in power level at time t_c. The calculated values were obtained by substituting values for ϕ and t in Equation (14) for the I and Equation (16) for the Xe. The measured values are plotted in Figure 7. The initial slope of the Xe curve immediately

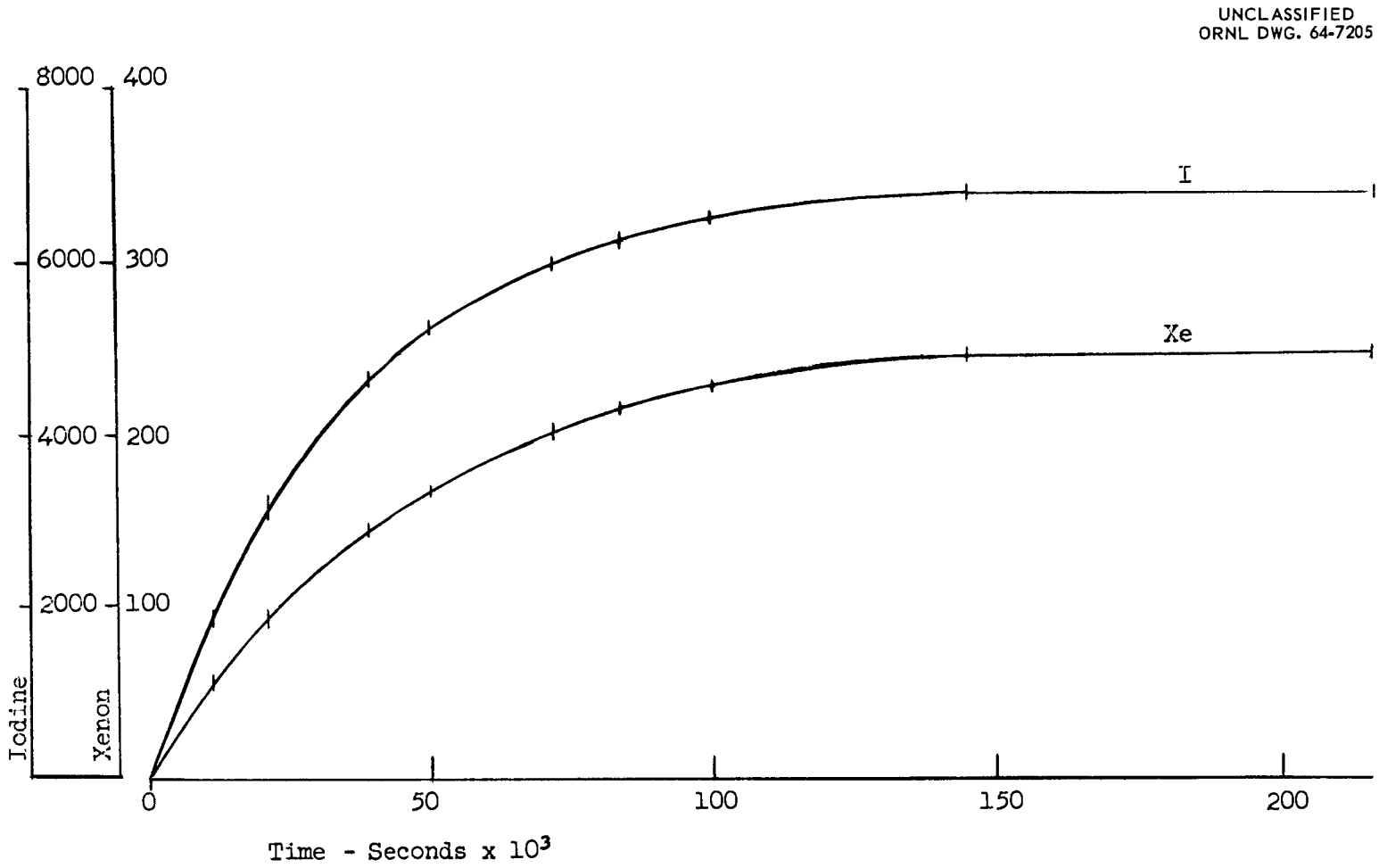

Fig. 6. Xenon and Iodine Concentration as a Function of Time (build-up)

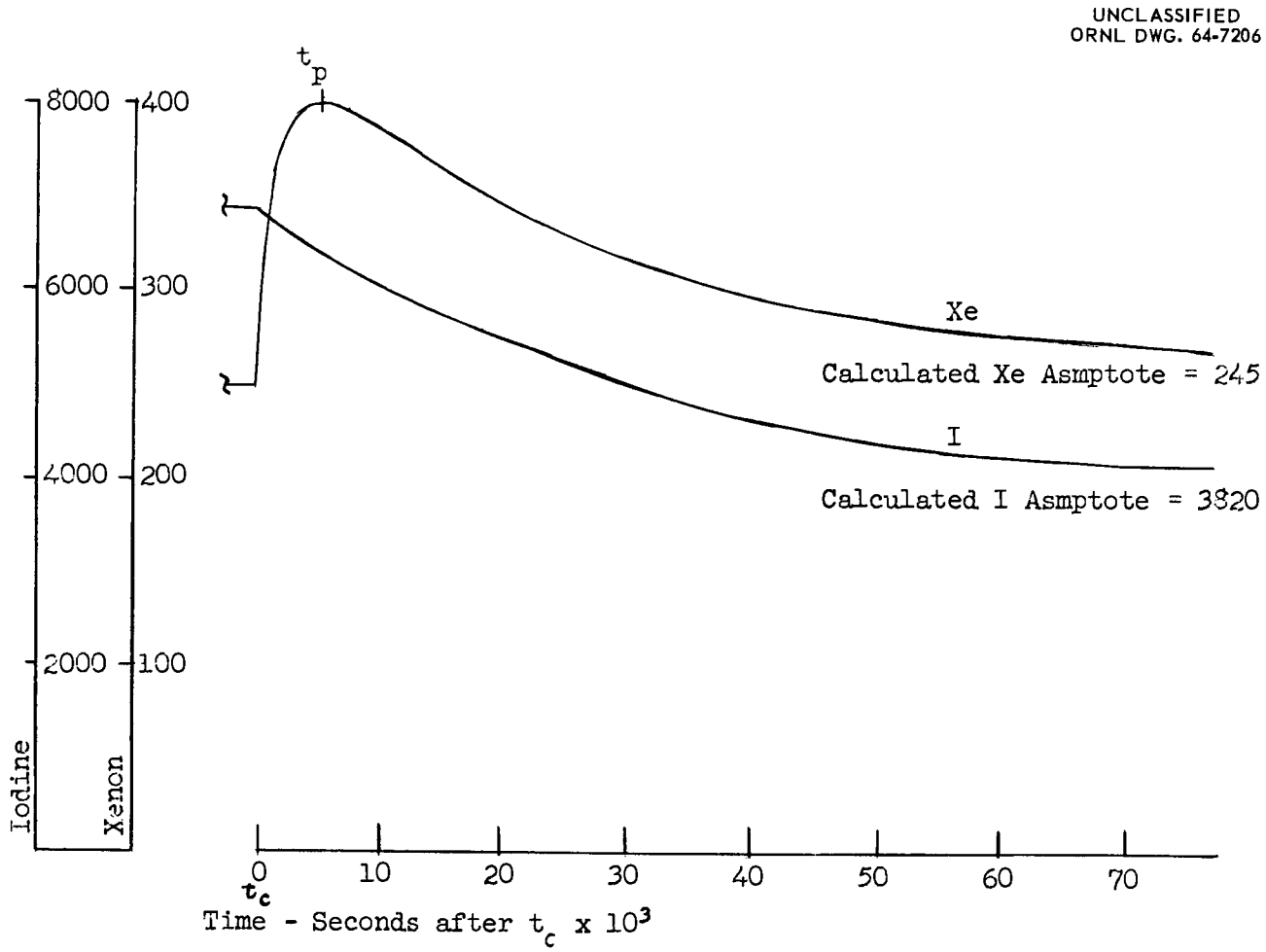

Fig. 7. Xenon and Iodine Concentration as a Function of Time After Power Reduction

after the reduction of power was found to be .1 unit/sec from Equation (18) or 6 units/min. Experimental data in Table I in Appendix II show that the measured Xe increase was 6 units during the first sixty seconds following the power reduction. The time required for the peak of the Xe curve to occur, t_p, is found by Equation (17) to be 5750 seconds after the power reduction. This point is shown on the curve in Figure 7 and is seen to agree very closely with the measured peak.

The outputs of A_4 and A_5 were measured and tabulated as "P" and "P X 10 Plus Fuel Depletion" respectively in Table I in Appendix II. The calculated values of P were obtained by substituting X_0 in Equation (5) where $X_0 = \frac{(\gamma_1+\gamma_2)\phi_0}{\lambda_2+\sigma_2\phi_0}$. P(t) may then be found for any concentration of Xe(t) from the ratio of $\frac{Xe(t)}{X_0}$.

A stability test was conducted to determine the over-all drift. The computer was placed in operation and the I and Xe concentrations were allowed to reach their equilibrium values at 100 per cent power. The values of I and Xe were observed for seven days. Drifts of 1.0 per cent maximum were observed in the Xe and lesser amounts in the I. 0.5 per cent of the drift was found to be caused by variations in the reference voltage to the Xe rotation counter.

CONCLUSIONS

The computer described in the previous sections meets the design objectives. The maximum difference between the Xe concentration computed by the computer and the calculated value was 3.2 per cent and occurred when the lapsed time was 31,980 seconds. The data are shown in Table I in Appendix II. Although this error is somewhat larger than expected, it is within acceptable limits. The stored values showed only slight perturbations even though the power supply was interrupted for several minutes. The long term reliability and repeatability was found to be good insofar as it could be checked in the relatively short accumulated operating time. No perceptable change in the performance characteristics of the rate generators were observed.

The over-all accuracy could be improved by using better reference supply voltages which were found to vary as much as 1 per cent during runs. Although the d-c motors performed well during all the tests conducted, brush wear might be a problem in long term operation. If this trouble should develop, a-c motors could probably be substituted for the d-c units.

REFERENCES

1. THE ELEMENTS OF NUCLEAR REACTOR THEORY (book), SAMUEL GLASSTONE, M. C. EDLUND, D. Van Nostrand Co. Inc., New York, N. Y., 1952.

2. CONTROL OF NUCLEAR REACTORS AND POWER PLANTS (book), M. A. SCHULTZ, McGraw-Hill Book Company, Inc., New York, N. Y., 1961.

APPENDIX I. Calculations

The general equations for I and Xe given by Equations (3) and (4) were solved below for step changes of neutron flux ϕ. The solutions were used to calculate values for I and Xe as functions of time for various steady state values of ϕ. The results of the above calculations were used to judge the performance of the computer when subjected to similar flux perturbations.

The following constants[1] will be used where indicated in the calculation of numerical values.

$\phi_0 = 3 \times 10^{14}$

$\phi_m = 1.68 \times 10^{14}$

$\gamma_1 = .056$

$\gamma_2 = .003$

$\sigma_2 = 3.5 \times 10^{-18}$

$\lambda_1 = 2.9 \times 10^{-5}$

$\lambda_2 = 2.1 \times 10^{-5}$

The equation for the build-up of I, Equation (3) is:

$$\frac{dI}{dt} = -\lambda_1 I + \gamma_1 \Sigma f \phi \qquad (3)$$

where I and ϕ are functions of time.

Transforming Equation (3) gives:

$$SI(s) - I(o+) + \lambda_1 I(s) = \gamma_1 \Sigma f \phi(s)$$

$$I(s)[S+\lambda_1] = \gamma_1 \Sigma f \phi(s) + I(o+)$$

$$I(s) = \frac{\gamma_1 \Sigma f \phi(s)}{S+\lambda_1} + \frac{I(o+)}{S+\lambda_1}$$

By the convolution theorem the first term may be inversely transformed:

$$\mathcal{L}^{-1}\left\{\frac{\gamma_1 \Sigma f \phi_{(s)}}{S+\lambda_1}\right\} = \mathcal{L}^{-1}\left\{\frac{\gamma_1 \Sigma f}{S+\lambda_1} \cdot \phi_{(s)}\right\} = \int_0^t \gamma_1 \Sigma f e^{-\lambda_1(t-\tau)} \phi_\tau d_\tau$$

$$I(t) = \int_0^t \gamma_1 \Sigma f e^{-\lambda_1(t-\tau)} \phi_\tau d_\tau + I_0 e^{-\lambda_1 t} = e^{-\lambda_1 t} \gamma_1 \Sigma f \int_0^t e^{\lambda_1 \tau} \phi_\tau d_\tau + I_o e^{-\lambda_1 t}$$

$$= e^{-\lambda_1 t}\left[\gamma_1 \Sigma f \int_0^t e^{\lambda_1 \tau} \phi_\tau d_\tau + I_0\right] \qquad (8)$$

Since the flux is generally changed from one level to another in a time short with respect to the time constants of the I one may assume that ϕ changes to its new value ϕ_0 as a step and therefore may be considered as a constant. Under these conditions Equation (8) becomes

$$I(t) = e^{-\lambda_1 t}\left[\gamma_1 \Sigma f \phi_0 \int_0^t e^{\lambda_1 \tau} d\tau + I_0\right]$$

which reduces to

$$I(t) = \frac{\gamma_1 \Sigma f \phi_0}{\lambda_1}\left[1 - e^{-\lambda_1 t}\right] + I_0 e^{-\lambda_1 t} \qquad (9)$$

The final value reached by the I is given by

$$I_{ss} = \frac{\gamma_1 \Sigma f \phi_0}{\lambda_1}$$

The equation for Xe buildup is:

$$\frac{dX(t)}{dt} + [\lambda_2 + \sigma_2 \phi(t)]\, X(t) = \lambda_1 I(t) + \gamma_2 \Sigma f \phi(t)$$

The equation can be solved for cases where $\phi(t)$ reaches its final value of ϕ_0 in a time short with respect to the time constants of the decay of Xe. Assume $\phi(t) = \phi_0$ = constant,

$$\phi(o-) = 0$$

Then $\frac{dX}{dt} + (\lambda_2 + \sigma_2\phi_0)\ X(t) = \lambda_1 I(t) + \gamma_2 \Sigma f\phi_0$

Let $(\lambda_2 + \sigma_2\phi_0) = A$

$$\frac{dX(t)}{dt} + AX(t) = \lambda_1 I(t) + \gamma_2 \Sigma f\phi_0$$

from Equation (9), if $I_0 = o$, $I(t) = \frac{\gamma_1 \Sigma f\phi_0}{\lambda_1}(1 - e^{-\lambda_1 t})$

Substituting this value in the above equation gives:

$$\frac{dX(t)}{dt} + AX(t) = \lambda_1 \left[\frac{\gamma_1 \Sigma f\phi_0}{\lambda_1}(1 - e^{-\lambda_1 t})\right] + \gamma_2 \Sigma f\phi_0$$

$$\frac{dX(t)}{dt} + AX(t) + \gamma_1 \Sigma f\phi_0 e^{-\lambda_1 t} = (\gamma_1+\gamma_2)\Sigma f\phi_0$$

Transforming:

$$SX(s) - X(o+) + AX(s) + \frac{\gamma_1 \Sigma f\phi_0}{S+\lambda_1} = \frac{(\gamma_1+\gamma_2)\Sigma f\phi_0}{S} \qquad (11)$$

$$X(s)(S+A) = \frac{(\gamma_1+\gamma_2)}{S}\Sigma f\phi_0 - \frac{\gamma_1 \Sigma f\phi_0}{S+\lambda_1}$$

$$X(s) = \frac{(\gamma_1+\gamma_2)\Sigma f\phi_0}{S(S+A)} - \frac{\gamma_1 \Sigma f\phi_0}{(S+\lambda)(S+A)}$$

$$X(s) = \frac{\Sigma f\phi_0[(\gamma_1+\gamma_2)(S+\gamma_1) - S\gamma_1]}{S(S+A)(S+\lambda_1)}$$

$$= \frac{\Sigma f\phi_0[\gamma_1 S + \gamma_1\lambda_1 + \gamma_2 S + \gamma_2\lambda_1 - S\gamma_1]}{S(S+A)(S+\lambda_1)}$$

$$= \Sigma f\phi_0 \left[\frac{S\gamma_2 + \gamma_1\lambda_1 + \gamma_2\lambda_1}{S(S+A)(S+\lambda_1)}\right]$$

$$= \gamma_2 \Sigma f\phi_0 \left[\frac{S + \frac{\gamma_1\lambda_1}{\gamma_2} + \lambda_1}{S(S+A)(S+\lambda_1)}\right]$$

let $\frac{\gamma_1\lambda_1}{\gamma_2} + \lambda_1 = a_o$

$$X(s) = \gamma_2 \Sigma f\phi_0 \left[\frac{S+a_o}{S(S+A)(S+\lambda_1)}\right]$$

$$\frac{X(t)}{\lambda_2 \Sigma f \phi_0} = \frac{a_0}{A\lambda_1} + \frac{a_0 - A}{A(A-\lambda_1)} e^{-At} + \frac{a_0 - \lambda_1}{\lambda_1(\lambda_1 - A)} e^{-\lambda_1 t}$$

$$= \frac{\gamma_1\lambda_1 + \lambda_1\gamma_2}{A\gamma_2\lambda_1} + \frac{\gamma_1\lambda_1 + \lambda_1\gamma_2 - A\gamma_2}{\gamma_2[A(A-\lambda_1)]} e^{-At} + \frac{\gamma_1\lambda_1 + \lambda_1\gamma_2 - \lambda_1\gamma_2}{\gamma_2\lambda_1(\lambda_1 - A)} e^{-\lambda_1 t}$$

$$= \frac{\gamma_1 + \gamma_2}{\gamma_2(\lambda_2+\sigma_2\phi_0)} + \frac{\gamma_1\lambda_1+\lambda_1\gamma_2-\gamma_2(\lambda_2+\sigma_2\phi_0)}{\gamma_2[\lambda_2+\sigma_2\phi_0)(\lambda_2-\lambda_1+\sigma_2\phi_0)]} e^{-(\lambda_2+\sigma_2\phi_0)t}$$

$$+ \frac{\lambda_1\gamma_1}{\gamma_2\lambda_1(\lambda_1-\lambda_2-\sigma_2\phi_0)} e^{-\lambda_1 t}$$

$$X(t) = \left[\frac{\gamma_1 + \gamma_2}{(\lambda_2+\sigma_2\phi_0)} + \frac{\gamma_1\lambda_1+\lambda_1\gamma_2-\gamma_2(\lambda_2+\sigma_2\phi_0)}{[(\lambda_2+\sigma_2\phi_0)(\lambda_2-\lambda_1+\sigma_2\phi_0)]} e^{-(\lambda_2+\sigma_2\phi_0)t}\right.$$

$$\left. + \frac{\gamma_1}{(\lambda_1-\lambda_2-\sigma_2\phi_0)} e^{-\lambda_1 t}\right] \Sigma f\phi_0 \qquad (12)$$

From Equation (4) the steady state Xe is found to be:

$$X_o = \frac{(\gamma_1+\gamma_2)\Sigma f\phi_0}{(\lambda_2+\sigma_2\phi_0)}$$

$$X(t) = \left\{X_o + \frac{\Sigma f\phi_0[\gamma_1\lambda_1+\lambda_1\gamma_2-\gamma_2(\lambda_2+\sigma_2\phi_0)]}{(\lambda_2+\sigma_2\phi_0)(\lambda_2-\lambda_1+\sigma_2\phi_0)} e^{-(\lambda_2+\sigma_2\phi_0)t}\right.$$

$$\left. \frac{\gamma_1\Sigma f\phi_0}{(\lambda_1-\lambda_2-\sigma_2\phi_0)} e^{-\lambda_1 t}\right\}$$

$$= X_o + \frac{\Sigma f\phi_0[\gamma_1+\gamma_1][\gamma_1\lambda_1+\lambda_1\gamma_2-\gamma_2(\lambda_2+\sigma_2\phi_0)]}{(\lambda_2+\sigma_2\phi_0)[\gamma_1+\gamma_2](\lambda_2-\lambda_1+\sigma_2\phi_0)} e^{-(\lambda_2+\sigma_2\phi_0)t}$$

$$+ \frac{\gamma_1[\gamma_1+\gamma_2]\Sigma f\phi_0(\lambda_2+\sigma_2\phi_0)}{(\lambda_2+\sigma_2\phi_0)[\gamma_1+\gamma_2][\lambda_1-\lambda_2-\sigma_2\phi_0]} e^{-\lambda_1 t}$$

$$= X_o\left[1 + \frac{\gamma_1\lambda_1+\lambda_1\gamma_2-\gamma_2(\lambda_2+\sigma_2\phi_0)}{[\gamma_1+\gamma_2](\lambda_2-\lambda_1+\sigma_2\phi_0)} e^{-(\lambda_2+\sigma_2\phi_0)t}\right.$$

$$\left. + \frac{\gamma_1(\lambda_2+\sigma_2\phi_0)}{(\gamma_1+\gamma_2)(\lambda_1-\lambda_2-\sigma_2\phi_0)} e^{-\lambda_1 t}\right]$$

$$X(t) = X_o\left\{1 + \frac{\gamma_1\lambda_1-\gamma_2(\lambda_2-\lambda_1+\sigma_2\phi_0)}{(\gamma_1+\gamma_2)(\lambda_2-\lambda_1+\sigma_2\phi_0)} e^{-(\lambda_2+\sigma_2\phi_0)t}\right.$$

$$\left. - \frac{\gamma_1(\lambda_2+\sigma_2\phi_0)}{(\gamma_1+\gamma_2)(\lambda_2-\lambda_1+\sigma_2\phi_0)}\right\}$$

$$X(t) = X_o \left\{1 + \frac{1}{(\gamma_1+\gamma_2)} \left[\frac{\lambda_1\gamma_1}{\lambda_2-\lambda_1+\sigma_2\phi_0} - \gamma_2\right] e^{-(\lambda_2+\sigma_2\phi_0)t} - \frac{\gamma_1(\lambda_2+\sigma_2\phi_0)}{(\gamma_1+\gamma_2)(\lambda_2-\lambda_1+\sigma_2\phi_0)} e^{-\lambda_1 t}\right\} \tag{13}$$

The I and Xe equations may be solved for a rapid change in neutron flux from any steady state level as follows:

$$\frac{dI(t)}{dt} = -\lambda_1 I(t) + \gamma_1 \Sigma f \phi_m$$

where ϕ_m is the steady state flux after the change in power.

$$SI(s) - I(o+) = -\lambda_1 I(s) + \frac{\gamma_1 \Sigma f \phi_m}{S}$$

$$I(s)\left[S + \lambda_1\right] = I(o+) + \frac{\gamma_1 \Sigma f \phi_m}{S}$$

where I(o+) is the iodine concentration at the time the flux is changed

$$I(s) = \frac{I(o+)}{S+\lambda_1} + \frac{\gamma_1 \Sigma f \phi_m}{S(S+\lambda_1)}$$

$$I(t) = I(o+)e^{-\lambda_1 t} + \frac{\gamma_1 \Sigma f \phi_m}{\lambda_1}\left[1 - e^{-\lambda_1 t}\right] \tag{14}$$

For the Xe

$$\frac{dX(t)}{dt} + (\lambda_2+\sigma_2\phi_m)\, X(t) = \lambda_1 I(t) + \gamma_2 \Sigma f \phi_m$$

$$\frac{dX(t)}{dt} + BX(t) - \lambda_1 I(t) = \gamma_2 \Sigma f \phi_m$$

$$\frac{dX(t)}{dt} + BX(t) - \lambda_1\left[I_{ss} e^{-\lambda_1 t} + \frac{\gamma_1 \Sigma f \phi_m}{\lambda_1}(1 - e^{-\lambda_1 t})\right] = \gamma_2 \Sigma f \phi_m$$

$$\frac{dX(t)}{dt} + BX(t) - \lambda_1\left[I_{ss} - \frac{\gamma_1 \Sigma f \phi_m}{\lambda_1}\right]e^{-\lambda_1 t} = \frac{\gamma_1 \Sigma f \phi_m}{\lambda_2} + \gamma_2 \Sigma f \phi_m$$

$$\frac{dX(t)}{dt} + BX(t) - C\,e^{-\lambda_1 t} = D \qquad (15)$$

$$B = \lambda_2 + \sigma_2\phi_m;\ C = \lambda_1 I_{ss} - \gamma_1\Sigma f\phi_m;\ D = (\gamma_1+\gamma_2)\Sigma f\phi_m$$

$$SX(s) - X(o+) + BX(s) - \frac{C}{S+\lambda_1} = \frac{D}{S}$$

X(o+) = the Xe at the time the reactor flux is changed.

$$X(s)(S + B) = \frac{D}{S} + \frac{C}{S+\lambda} = X(o+)$$

$$X(s) = \frac{D}{S(S+B)} + \frac{C}{(S+\lambda_1)(S+B)} + \frac{X(o+)}{(S+3)}$$

$$X(t) = \frac{D}{B}\left[1 - e^{-Bt}\right] + \frac{C}{B-\lambda_1}\left[e^{-\lambda_1 t} - e^{-Bt}\right] + X(o+)\ e^{-Bt}$$

$$= \frac{D}{B} - \left[\frac{D}{B} + \frac{C}{B-\lambda_1} - X(o+)\right] e^{-Bt} + \frac{C}{B-\lambda_1}\, e^{-\lambda_1 t}$$

$$= \frac{(\gamma_1+\gamma_2)\Sigma f\phi_m}{\lambda_2+\sigma_2\phi_m} - \left[\frac{(\gamma_1+\gamma_2)\Sigma f\phi_m}{\lambda_2+\sigma_2\phi_m} + \frac{\lambda_1 I_{ss} - \gamma_1\Sigma f\phi_m}{-\lambda_1+\lambda_2+\sigma_2\phi_m} - X(o+)\right] e^{-Bt}$$

$$+ \frac{\lambda_1 I_{ss} - \gamma_1\Sigma f\phi_m}{-\lambda_1+\lambda_2+\sigma_2\phi_m}\, e^{-\lambda_1 t}$$

From Equation (15)

$$X_{om} = \frac{D}{B} = \text{the xenon concentration at } t = \infty$$

$$= \frac{(\gamma_1+\gamma_2)\Sigma f\phi_m}{\lambda_2+\sigma_2\phi_m}$$

From Equation (11) it can be seen that if the I has reached its steady state value before the flux is changed,

$$I(o+) = I_{ss} = \frac{\gamma_1\Sigma f\phi_0}{\lambda_1}$$

X(t) now becomes

$$X(t) = X_{om} - \left[X_{om} + \frac{\gamma_1 \Sigma f(\phi_o - \phi_m)}{\lambda_2 - \lambda_1 + \sigma_2 \phi_m} - X_o\right] e^{-(\lambda_2 + \sigma_2 \phi_m)t}$$

$$\frac{\gamma_1 \Sigma f(\phi_o - \phi_m)}{\lambda_2 - \lambda_1 + \sigma_2 \phi_m} e^{-\lambda_1 t} \tag{16}$$

Equation (7) is a general solution for xenon as a function of time for rapid changes of flux ϕ from one steady state level to another.

Differentiating X(t) with respect to time gives:

$$\frac{dX(t)}{dt} = (\lambda_2 + \sigma_2 \phi_m)\left[X_{om} + \frac{\gamma_1 \Sigma f(\phi_o - \phi_m)}{\lambda_2 - \lambda_1 + \sigma_2 \phi_m} - X_o\right] e^{-(\lambda_2 + \sigma_2 \phi_m)t}$$

$$- \lambda_1 \left[\frac{\gamma_1 \Sigma f(\phi_o - \phi_m)}{\lambda_2 - \lambda_1 + \sigma_2 \phi_m}\right] e^{-\lambda_1 t}$$

Setting the derivative equal to zero we may solve for the time t_p at which the xenon reaches a peak value after a decrease in flux.

$$\frac{(\lambda_2 + \sigma_2 \phi_m)\left[X_{om} + \frac{\gamma_1 \Sigma f(\phi_o - \phi_m)}{\lambda_2 - \lambda_1 + \sigma_2 \phi_m} - X_o\right]}{\lambda_1 \left[\frac{\gamma_1 \Sigma f(\phi_o - \phi_m)}{\lambda_2 - \lambda_1 + \sigma_2 \phi_m}\right]} = e^{(\lambda_2 - \lambda_1 + \sigma_2 \phi_m) t_p}$$

$$t_p = \frac{\ln \dfrac{(\lambda_2 + \sigma_2 \phi_m)\left[X_{om} + \frac{\gamma_1 \Sigma f(\phi_o - \phi_m)}{\lambda_2 - \lambda_1 + \sigma_2 \phi_m} - X_o\right]}{\lambda_1 \left[\frac{\gamma_1 \Sigma f(\phi_o - \phi_m)}{\lambda_2 - \lambda_1 + \sigma_2 \phi_m}\right]}}{\lambda_2 - \lambda_1 + \sigma_2 \phi_m} \tag{17}$$

By solving for the value of $\frac{dX(t)}{dt}$ at t = 0, we obtain the slope of the curve at the time the flux is changed:

$$\left.\frac{dX(t)}{dt}\right|_{t=0} = (\lambda_2 + \sigma_2 \phi_m)\left[X_{om} + \frac{\gamma_1 \Sigma f(\phi_o - \phi_m)}{\lambda_2 - \lambda_1 + \sigma_2 \phi_m} - X_o\right]$$

$$- \lambda_1 \frac{\gamma_1 \Sigma f(\phi_o - \phi_m)}{\lambda_2 - \lambda_1 + \sigma_2 \phi_m} . \tag{18}$$

The poison P is given from Equation (5) as

$$P = \frac{0.84\ \sigma_2(\gamma_1+\gamma_2)\phi_o}{(\lambda_2+\sigma_2\phi_o)}$$

$$= \frac{0.84(3.5 \times 10^{-18})(0.059)3 \times 10^{14}}{2.1 \times 10^{-5} + (3.5 \times 10^{-18})(3 \times 10^{14})}$$

$$= \frac{3 \times 0.1735 \times 10^{-4}}{107 \times 10^{-5}} = \frac{520 \times 10^{-7}}{107 \times 10^{-5}}$$

$$= 4.86 \times 10^{-2} = 4.8 \text{ per cent.}$$

APPENDIX II. Tables

Table I is a tabulation of the measured and calculated values of Xe, I, P and P plus fuel depletion as a function of time. The measured values were read directly from the computer. The calculated values were obtained by solving the Xe, I, P and fuel depletion equations given in Appendix I with the same values of time, flux and system constants as those used in obtaining the computed values given above.

Table II is a tabulation of the rotation counter revolutions per minute for various values of input current and applied voltage.

Table I.. Measured and Calculated Values of Xe, I, P, and P Plus Fuel Depletion.

	MEASURED				CALCULATED			
Lapsed Time Seconds	Iodine Register	Xenon Register	Xenon Poison P	Px10 plus Fuel Depletion	Iodine	Xenon	P	Px10 plus Fuel Depletion
0	00006	00001	000	0	000	000	0	
3600	00662	00021	0.013	0.143	676	21.2	0.013	0.145
7380	01279	00038	0.024	0.270	1320	38.8	0.025	0.271
11220	01848	00054	0.035	0.401	1900	55.0	0.035	0.397
14940	02343	00069	0.044	0.500	2500	70.0	0.045	0.513
18720	02800	00083	0.053	0.607	2860	84.0	0.054	0.619
22140	03171	00097	0.062	0.714	3240	96.0	0.061	0.703
26220	03573	00107	0.069	0.806	3642	107.0	0.069	0.801
28560	03783	00113	0.072	0.840	3850	115.0	0.074	0.860
31980	04067	00128	0.082	0.955	4120	124.0	0.080	0.935
36300	04388	00139	0.089	1.043	4380	135.0	0.087	1.023
40140	04645	00144	0.093	1.100	4700	144.0	0.092	1.090
43740	04853	00151	0.097	1.150	4920	152.0	0.098	1.164
46500	05013	00155	0.099	1.186	5060	157.0	0.101	1.206
50760	05227	00166	0.107	1.285	5260	165.0	0.106	1.274
54180	05378	00170	0.109	1.320	5420	168.0	0.108	1.308
58080	05533	00176	0.113	1.376	5600	177.0	0.115	1.394
61620	05661	00180	0.116	1.424	5700	182.0	0.117	1.430
65820	05794	00186	0.119	1.470	5820	188.0	0.121	1.491
68580	05874	00190	0.122	1.505	5900	191.0	0.123	1.518
72000	05965	00192	0.123	1.534	6000	195.0	0.125	1.554
75660	06054	00196	0.126	1.578	6060	198.0	0.128	1.598
79920	06146	00203	0.130	1.630	6170	204.0	0.134	1.670
83100	06208	00210	0.135	1.700	6220	207.0	0.133	1.680
144000	06770	00244	0.157	2.175	6720	238.0	0.153	2.135
231000	06800	00248	0.159	2.556	6800	248.0	0.159	2.560

Continued

Table I, Continued

	MEASURED				CALCULATED			
Lapsed Time Seconds	Iodine Register	Xenon Register	Xenon Poison P	Poison Px10 Plus FD	Iodine	Xenon	P	Px10 plus Fuel Depletion
				Reduced Flux				
(t_c) 0	06811	00248	0.159	Data Not	6811	248.0	0.159	Data Not
60		00254		Synchronized				Synchronized
1800	06655	00362	0.232	Here	6660	360.0	0.230	Here
3600	06512	00388	0.249		6512	386.0	0.248	
5400	06380	00398	0.256			397.0	0.254	
7200	06257	00398	0.256		6242	398.0	0.254	
10800	06035	00385	0.247		6020	380.0	0.247	
18000	05600	00350	0.224			340.0	0.224	
77400	04150	00270	0.173		4138	265.0	0.170	
∞					3820	245.0		

Table II. Rate Generator Performance

Input Voltage	Input Current (Amps)	Rotation Counter Revolutions Per Minute
0.001	1×10^{-6}	0.0191
0.005	5×10^{-6}	0.096
0.01	1×10^{-5}	0.189
0.05	5×10^{-5}	0.95
0.1	1×10^{-4}	1.90
0.5	5×10^{-4}	9.5
0.6	6×10^{-4}	11.4

ORNL-3685
UC-37 — Instruments
TID-4500 (32nd ed.)

INTERNAL DISTRIBUTION

1. Biology Library
2-4. Central Research Library
5. Reactor Division Library
6-7. ORNL — Y-12 Technical Library
Document Reference Section
8-37. Laboratory Records Department
38. Laboratory Records, ORNL R.C.
39. J. L. Anderson
40. A. M. Billings
41. C. J. Borkowski
42. O. W. Burke
43. E. N. Cramer
44. F. L. Culler
45. D. N. Fry
46. S. H. Hanauer
47. P. G. Herndon
48. W. H. Jordan
49. C. E. Larson
50. M. E. LaVerne
51. C. D. Martin, Jr.
52-61. L. C. Oakes
62. D. P. Roux
63. M. J. Skinner
64. L. E. Stanford
65. R. S. Stone
66. J. A. Swartout
67. J. R. Tallackson
68. A. M. Weinberg
69-88. G. D. Whitman
89. R. E. Whitt

EXTERNAL DISTRIBUTION

90. F. Legler, Atomic Energy Commission, Washington
91. N. Grossman, Division of Compliance, AEC, Washington
92. D. Rauch, Division of Reactor Development, AEC, Washington
93. C. E. Winters, UCC, Palmer Research Center, P. O. Box 6116, Cleveland, Ohio
94. Research and Development Division, AEC, ORO
95-731. Given distribution as shown in TID-4500 (32nd ed.) under Instruments category (100 copies — OTS)