MARTIN MARIETTA ENERGY SYSTEMS LIBRARIES
3 4456 0382771 3

CENTRAL RESEARCH LIBRARY
DOCUMENT COLLECTION

ORNL-3580
UC-25 – Metals, Ceramics, and Materials
TID-4500 (27th ed.)

DESIGN AND CONSTRUCTION OF EDDY-CURRENT COOLANT-CHANNEL SPACING PROBES

C. V. Dodd

CENTRAL RESEARCH LIBRARY
DOCUMENT COLLECTION
LIBRARY LOAN COPY
DO NOT TRANSFER TO ANOTHER PERSON
If you wish someone else to see this document, send in name with document and the library will arrange a loan.

OAK RIDGE NATIONAL LABORATORY
operated by
UNION CARBIDE CORPORATION
for the
U.S. ATOMIC ENERGY COMMISSION

LEGAL NOTICE

This report was prepared as an account of Government sponsored work. Neither the United States, nor the Commission, nor any person acting on behalf of the Commission:

A. Makes any warranty or representation, expressed or implied, with respect to the accuracy, completeness, or usefulness of the information contained in this report, or that the use of any information, apparatus, method, or process disclosed in this report may not infringe privately owned rights; or

B. Assumes any liabilities with respect to the use of, or for damages resulting from the use of any information, apparatus, method, or process disclosed in this report.

As used in the above, "person acting on behalf of the Commission" includes any employee or contractor of the Commission, or employee of such contractor, to the extent that such employee or contractor of the Commission, or employee of such contractor prepares, disseminates, or provides access to, any information pursuant to his employment or contract with the Commission, or his employment with such contractor.

ORNL-3580

Contract No. W-7405-eng-26

Metals and Ceramics Division

DESIGN AND CONSTRUCTION OF EDDY-CURRENT COOLANT-CHANNEL SPACING PROBES

C. V. Dodd

APRIL 1964

OAK RIDGE NATIONAL LABORATORY
Oak Ridge, Tennessee
operated by
UNION CARBIDE CORPORATION
for the
U. S. ATOMIC ENERGY COMMISSION

MARTIN MARIETTA ENERGY SYSTEMS LIBRARIES

3 4456 0382771 3

DESIGN AND CONSTRUCTION OF EDDY-CURRENT COOLANT-CHANNEL SPACING PROBES

C. V. Dodd

ABSTRACT

The coolant-channel spacing between two flat fuel plates may be measured using an eddy-current induction coil. The range and sensitivity of these spacing measurements are functions of the coil geometry, the material surrounding the coil, and the operating frequency. Experimental curves are given showing how the coil impedance varies as a function of geometry, frequency, and the material surrounding the coil. A design problem is solved showing the compromises made between range and sensitivity which determine the coil geometry. The wire size and hence the proper number of turns are selected to match the coil to an alternating current bridge.

Probe construction techniques are given to help the user construct both the coil and the apparatus to position the coil in the coolant channel. This report provides the necessary data for the design of spacing probes for many similar problems.

INTRODUCTION

The fuel elements in today's reactors are frequently constructed by stacking fuel-bearing plates with spaces between plates for coolant flow. The plate spacing, which may vary from several mils to several hundred mils, greatly affects the plate temperature and reactor efficiency. This plate spacing must be maintained within close tolerances to insure high efficiency without plate failure. One prerequisite to controlling this spacing is being able to measure it. It has been demonstrated that it is possible to measure this spacing satisfactorily using eddy-current techniques.[1] The coil design and operating frequency play a major part in the range and sensitivity of this type of measurement. The purpose of this paper is to help optimize the coil design and frequency of operation for any particular inspection problem using empirical curves.

TECHNIQUE OF MEASUREMENT

When an alternating current is applied to a coil of wire, the coil will produce an alternating magnetic field which determines the coil impedance. The introduction of a metal into this alternating field changes the field and hence the coil impedance. The properties affecting the coil impedance are coil geometry; frequency of the alternating current; conductivity, permeability, and shape and orientation of the metal; and distance from the coil to the metal (lift-off). Figure 1 shows how the normalized impedance varies as a function of some of these variables. The impedance is normalized to the impedance of the coil in air by subtracting the resistance of the coil in air and dividing both coordinates by the

---

[1] C. V. Dodd and R. W. McClung, Fuel Element Coolant Channel and Other Spacing Measurements Using Eddy-Current Techniques, ORNL-TM 129 (March 20, 1962).

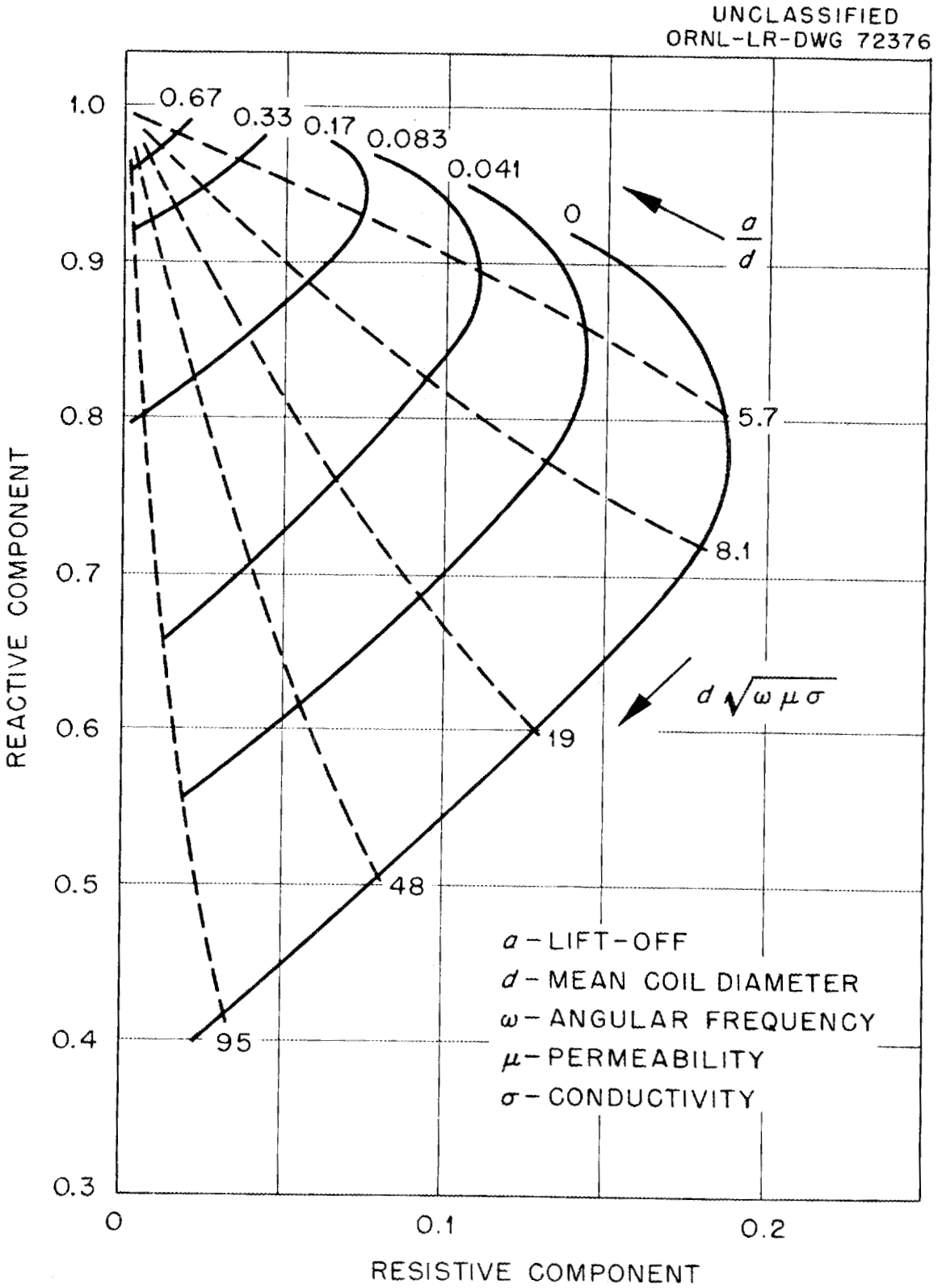

Fig. 1. Normalized Impedance of a Coil Above a Conductor.

magnitude of the coil reactance in air. It may be seen from Fig. 1 that lift-off (coil-to-specimen spacing) has a pronounced effect on the coil impedance. This effect is used to make indirect measurements of spacing between fuel plates as shown in Fig. 2. The coil is placed on a conducting piece of metal directly beneath a spring. The travel of the spring is limited by the upper fuel plate, and the spring action keeps the metal beneath the coil snugly against the bottom plate. The coil impedance is a function of the coil-to-spring spacing and thus a function of the coolant-channel spacing. By choosing this configuration, several geometrical variables are eliminated. The other variables can be optimized by proper design of the probe coil and choice of operating frequency.

IMPEDANCE STUDIES

An experimental study was performed to determine empirically the impedance associated with various test conditions. A family of 13 coils of various dimensions was used to generate curves of normalized impedance by placing the coils on one plane and varying the distance to another plane for different frequencies. Thus, the probe geometry (shown in Fig. 2) was simulated. All the dimensions are expressed in terms of mean coil diameter (the average of inside diameter and outside diameter). Figure 3 shows how the relative amplitude of the normalized impedance varies with spacing for a number of coils at different frequencies. Differences between the curves may be due to experimental errors. Since the impedance is approximately the same nonlinear function of spacing, the only two values of normalized impedance necessary to be given are those for zero and infinite spacing. Figure 4 shows the variation in impedance with

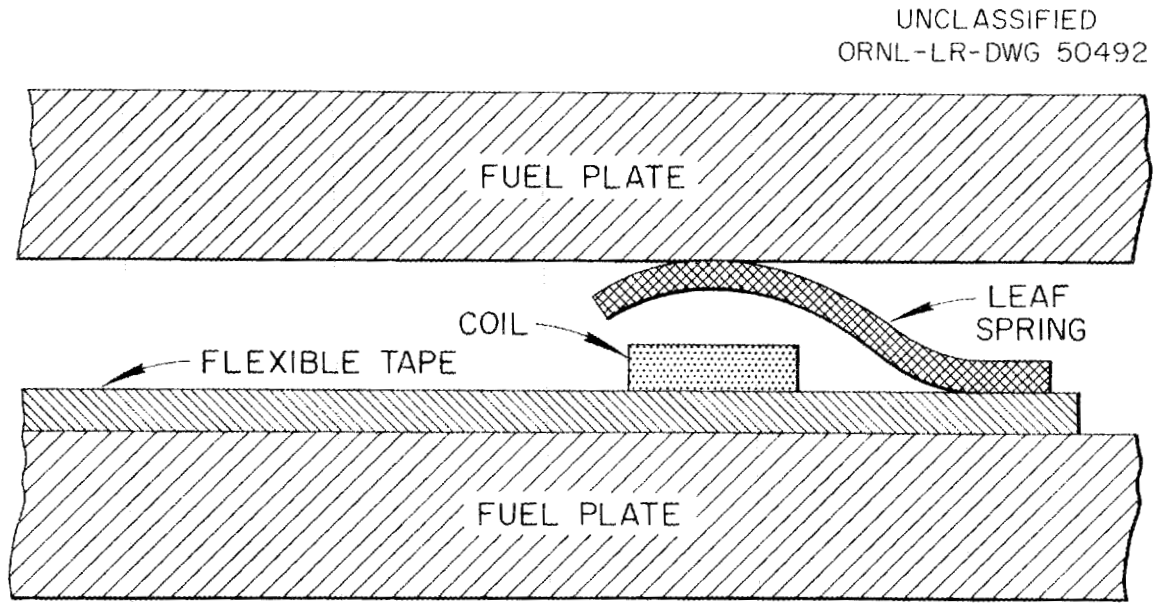

Fig. 2. Coolant Channel Space Measuring Probe.

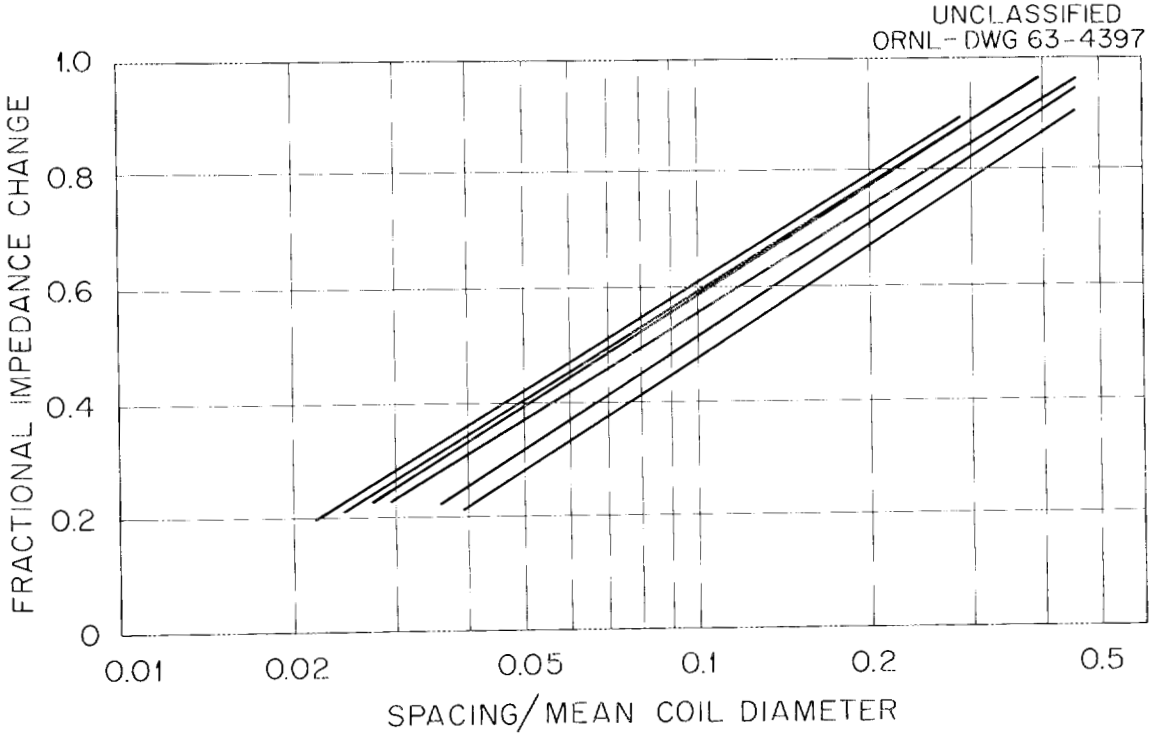

Fig. 3. Impedance Change vs Spacing Change.

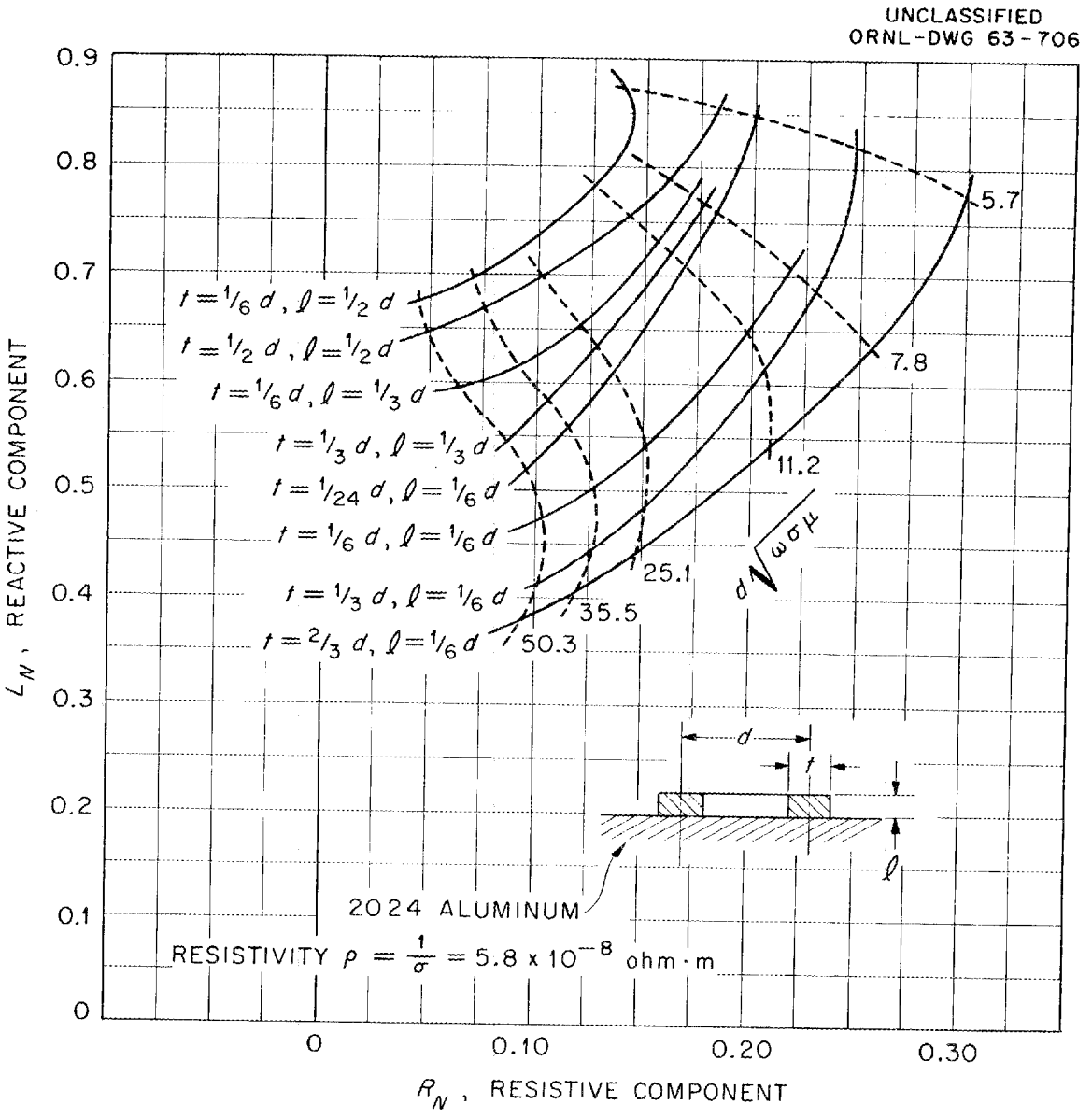

Fig. 4. Normalized Impedance for Infinite Spacing of Nonmagnetic Materials.

eight different coil geometries for various frequencies with infinite spacing between the coil and spring. Figure 5 shows the variation for zero spacing (i.e., the conducting planes were in contact with either side of the coil). In both cases, the conductor was 2024 aluminum with μ_r (relative permeability) = 1. Figure 6 shows the variations with infinite spacing from tool steel (relative permeability $\approx$ 200). Figure 7 shows the same variations with zero spacing. The total impedance change for any given set of conditions may be obtained by vector subtraction of the impedance for zero spacing from the impedance for infinite spacing. The impedance difference should be large in order to make sensitive measurements. Factors peculiar to an inspection problem, such as the desired span and accuracy and the entry accessibility, will limit the choice of coil geometry. However, some general observations may be made from Figs. 3 through 7. The range (span) is directly proportional to the coil diameter, and the sensitivity is inversely proportional to the coil diameter. The sensitivity increases with a high permeability material with short and thick coils. The sensitivity decreases slightly with increasing frequency, but with higher frequencies, there is less effect from changes in the air resistive component due to variation in coil and metal temperature.

With these general observations, a compromise may be made between range, sensitivity, and difficulty of fabrication. Once a compromise has been reached and a coil geometry and frequency have been determined for a particular inspection problem, the number of turns of wire (and thus the wire size) may be adjusted to match impedance with the bridge circuit used to measure the impedance.

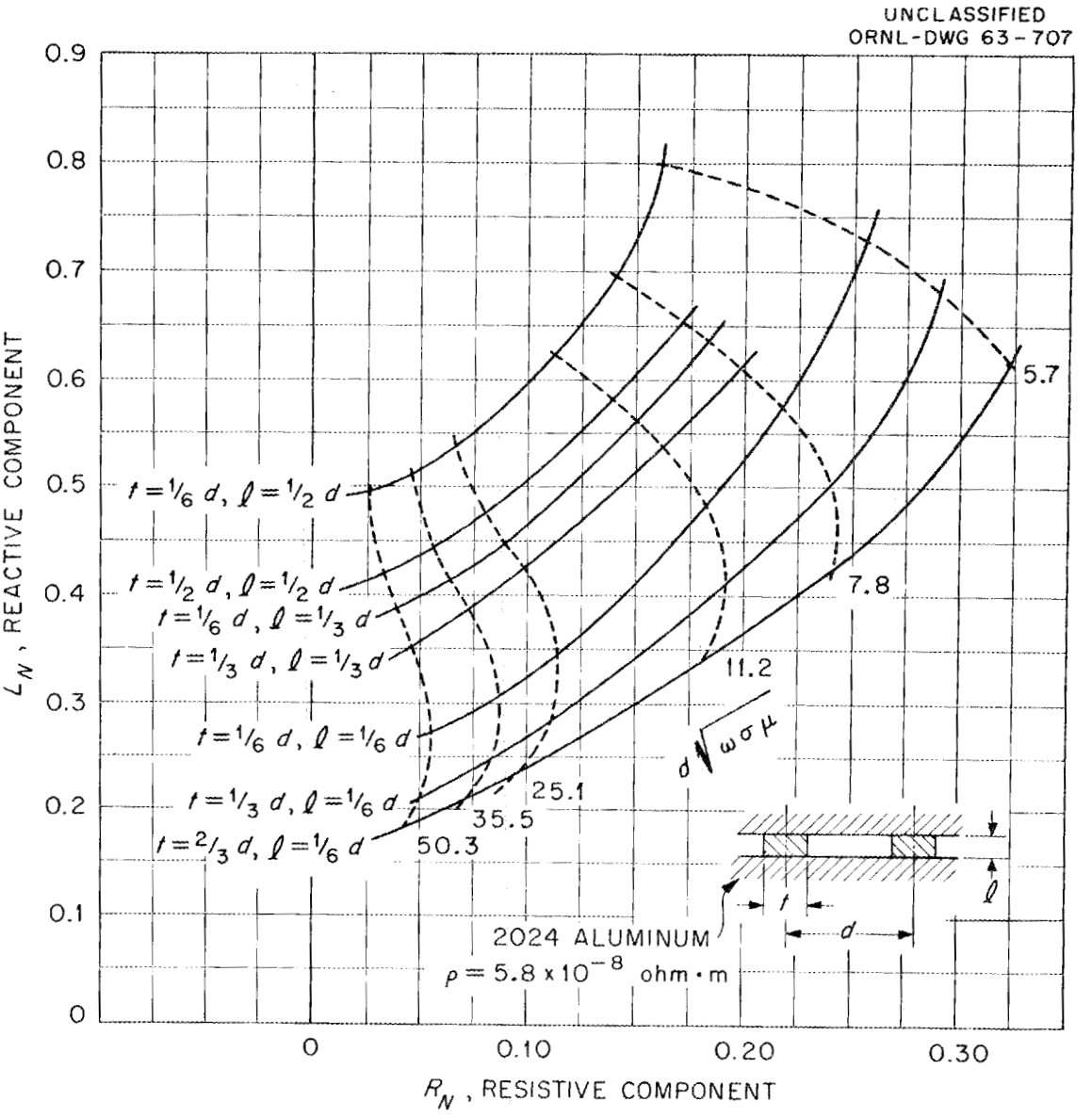

Fig. 5. Normalized Impedance for Zero Spacing of Nonmagnetic Materials.

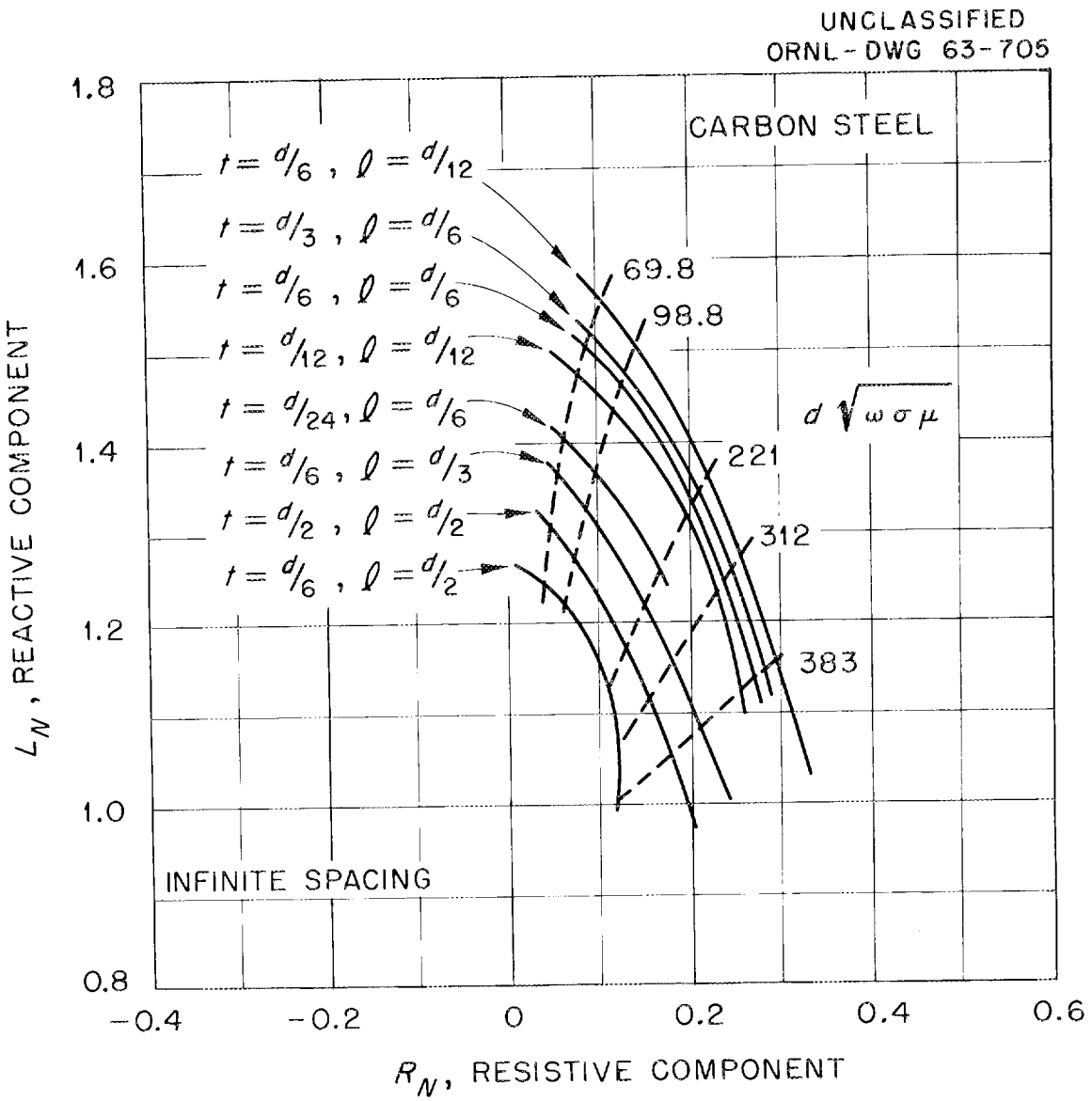

Fig. 6. Normalized Impedance for Infinite Spacing of Magnetic Materials.

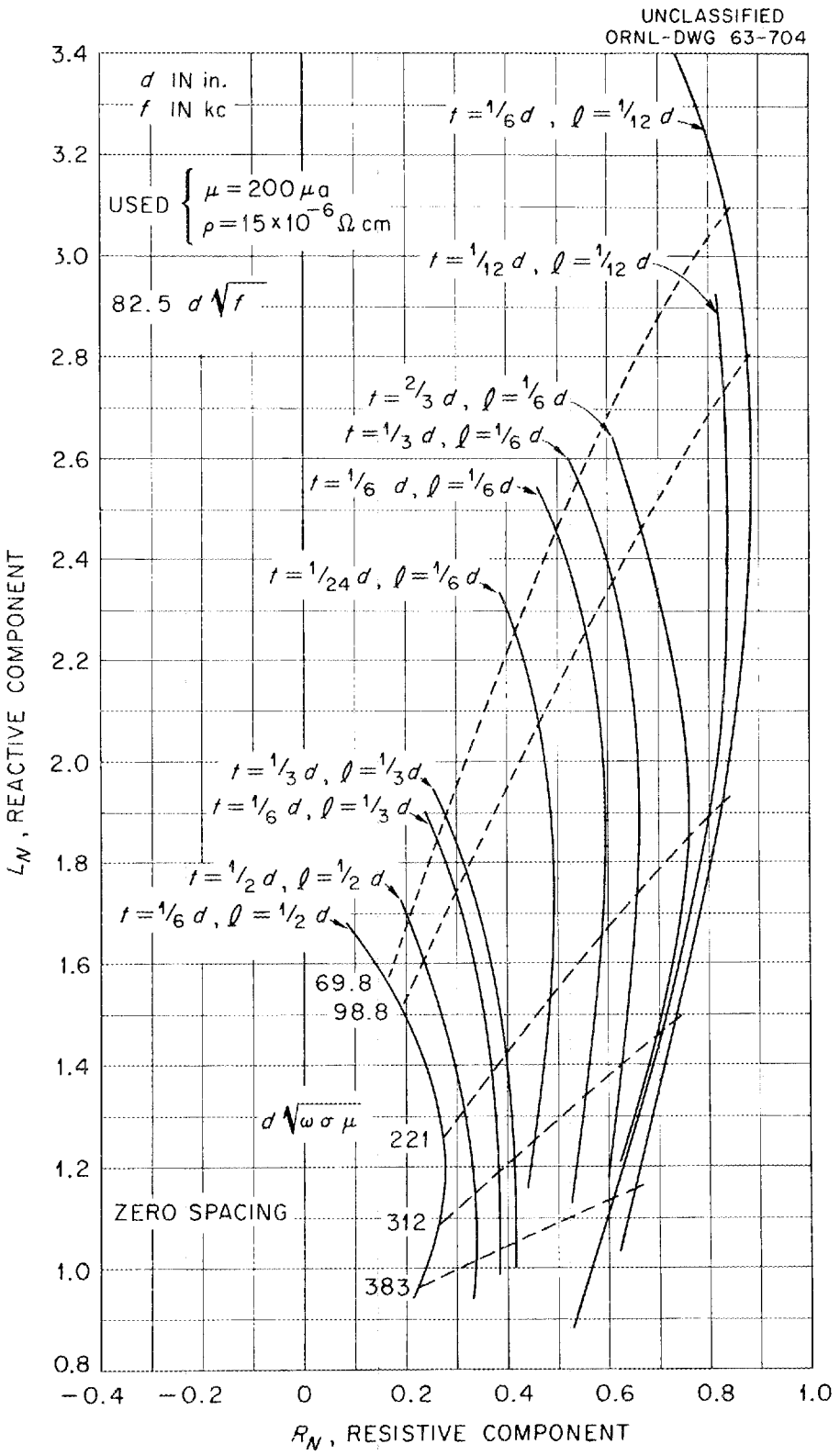

Fig. 7. Normalized Impedance for Zero Spacing of Magnetic Materials.

COIL DESIGN

A sample design problem will be solved for the coil in the probe used to measure coolant channel spacing in the Advanced Test Reactor fuel elements. The following nomenclature will be used to define the various coil dimensions (see Fig. 8 for sketch).

d = mean coil diameter
t = thickness
ℓ = length

Carbon steel was chosen for the probe material due to its good mechanical properties and high permeability. High permeability material increases the total impedance change and acts as a good electrical shield for the coil. The spacing range was from 68 to 88 mils, and the desired accuracy was ± 0.5 mil. The coil diameter may be approximately chosen with help from Fig. 3. The range is small for normalized spacing values (spacing/mean coil diameter) between 0.01 and 0.1, and the sensitivity is low above about 0.2; therefore, coil diameters corresponding to the 0.1 to 0.2 values are used. The recommended spacing range would be from 0.1 to 0.2 mean coil diameters thus giving a span of 0.1 times the mean coil diameter. Thus, for a spacing range of 20 mils a mean coil diameter of 200 mils would be required. However, a mean diameter of 250 mils was chosen in order to extend the range to 25 mils to allow for better quantitative results beyond the tolerances and because it was easier to construct. The sensitivity increases with increasing thickness and decreasing length. The maximum thickness to mean diameter ratio would be 1, but this would not leave room for a form on which the coil could be wound and would make the outside diameter of the coil equal to 1/2 in. The 1/2-in. coil outside

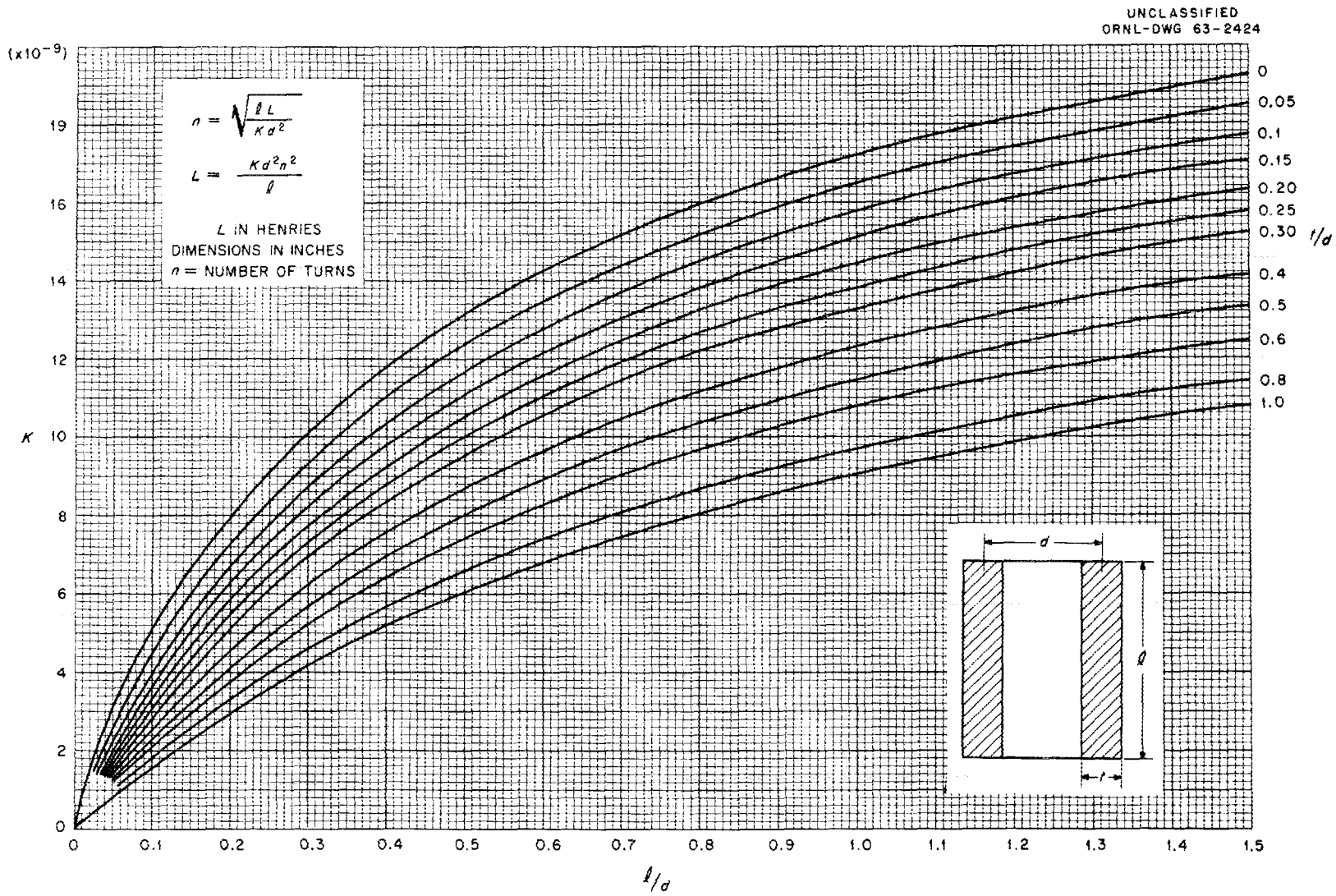

Fig. 8. Curves for Calculating Self-Inductance of Coils in Air.

diameter would require a 3/4-in.-wide probe head since the head should extend approximately one coil radius on either side of the coil for proper shielding. As a compromise, the thickness was chosen to be half the mean diameter. The length of the coil should be short as reasonable for high sensitivity and to fit into the minimum probe spacing. The length is a hard dimension to control in the winding process, and extremely thin coils show large variations in sensitivity for small length variations. The length was chosen to be one-tenth (or 0.025 in.) the mean coil diameter. A frequency of 100 kc was chosen because it placed the zero-to-infinite spacing impedance change on a fairly sensitive portion of the normalized impedance curves, and it was readily available in commerical instruments.

The relative position (value of coil impedance) in the impedance plane in Figs. 1, 4, 5, 6, and 7 is partly determined by the relation $d\sqrt{\omega\mu\sigma}$, where d = mean coil diameter, ω = angular frequency, μ = permeability, and σ = conductivity.

For the Advanced Test Reactor probe,

$$d = 0.250 \text{ in.} = 0.00636 \text{ m},$$

$$\omega = 2\pi f = 2\pi \times 10^5 = 6.28 \times 10^5,$$

$$\mu = 200\ \mu_0 = 200(1.26 \times 10^{-6})\ \text{h} = 2.52 \times 10^{-4}\ \text{h},$$

$$\rho = \frac{1}{\sigma} = 15 \times 10^{-6}\ \omega\text{cm} = 15 \times 10^{-8}\ \omega\text{m}, \text{ and}$$

$$d\sqrt{\omega\mu\sigma} = 6.36 \times 10^{-3}\ \text{m}\left[\frac{(6.28 \times 10^5)(2.52 \times 10^{-4})}{1.5 \times 10^{-7}}\right]^{1/2} \approx 213\ .$$

The factor $d\sqrt{\omega\mu\sigma}$ for carbon steel may be calculated more easily by the relationship: $d\sqrt{\omega\mu\sigma} \approx 85d\sqrt{f}$, where d is now the diameter in inches and f is the frequency in kilocycles. The normalized impedance for infinite spacing may now be estimated from the curves in Fig. 6. The curve of $d\sqrt{\omega\mu\sigma} = 213$ would fall between the 98.8 and 221 curves, being

very close to the 221 curve. There is no curve for $t/d = 0.5$ and $\ell/d = 0.1$, but this curve would be near $t/d = 1/6$ and $\ell/d = 1/12$. These curves would intersect at approximately $0.2 + 1.4\,j$; from Fig. 7 (curves for zero spacing) the impedance is likewise estimated to be $0.9 + 2.1\,j$. The total impedance change from zero-to-infinite spacing is $0.7 + 0.7\,j$. From Fig. 3, this would give a change of approximately $0.2(0.7 + 0.7\,j)$ or $(0.14 + 0.14\,j)$ over the 25-mil spacing range or approximately $\frac{0.14 + 0.14\,j}{50} = 0.0028 + 0.0028\text{-}j$ impedance change per 0.5 mil. From Fig. 3 the impedance for nominal spacing (78 mils or 0.15 coil diameters) may be approximated by subtracting the fractional impedance change $0.6(0.7$ and $0.7\,j)$ from the impedance for zero spacing. This gives a nominal impedance (normalized) of $0.5 + 1.7\,j$. A ±0.5-mil variation ($\pm|0.0028 + 0.0028\,j| \approx \pm 0.004$) represents a variation in the absolute value of the nominal impedance ($|0.5 + 1.7j| = 1.77$) of approximately 0.22%. This is a rather large percentage deviation and is easily measured by almost any impedance bridge. The nominal coil impedance should be made to match the bridge impedance for maximum sensitivity. This may be expressed: Z bridge = Z nominal, where Z bridge is the impedance needed to balance the bridge. Unfortunately, the nominal impedance cannot be calculated directly from normalized impedance curves. However, multiplying the right side of the equation by $\frac{Z\ air}{Z\ air}$ gives: $Z\ bridge = Z\ air\ (\frac{Z\ nominal}{Z\ air})$ and the ratio of $(\frac{Z\ nominal}{Z\ air})$ may be obtained from the normalized impedance curves. Solving for Z air gives: $|Z\ air| = |Z\ bridge|\ (\frac{|Z\ air|}{|Z\ nominal|}$. The absolute value signs are used since only the magnitude of the air impedance is needed. Since $|Z\ air| = \omega\ L\ air$, the air inductance may be expressed: $L\ air = \frac{|Z\ bridge|}{\omega}\ \frac{|Z\ air|}{|Z\ nominal|}$. The commercial instrument which was

used required an inductance of 175 μh in its bridge, so the desired air inductance is

$$L\ air = \omega \frac{(175\ \mu h)}{\omega} \frac{|Z\ air|}{|Z\ nominal|} .$$

$|Z\ air|$ is 1 on the normalized impedance plots and $|Z\ nominal|$ is $|0.5 + 1.7\ j| = 1.77$. Therefore, the air inductance of the coil (L air) should be made equal to 175 μh $\frac{1}{1.77} \approx 98$ μh. With the coil geometry fixed, the number of turns may be calculated from Fig. 8.[2] The value of K for $\ell/d = 0.1$ and $t/d = 0.5$ is 2.3×10^{-9}. Solving for n,

$$\left[n = \left(\frac{\ell L}{Kd^2}\right)^{1/2} \right] = \left[\frac{(98 \times 10^{-6})(0.025)}{(2.3 \times 10^{-9})(0.250)} \right]^{1/2} = 129 \text{ turns.}$$

The wire size is then estimated from the following data.

Wire Size	Number of Turns per 0.01 sq in.
30	67
32	90
34	150
36	260
38	310
40	598
42	1100
44	1550

The above information gives the number of turns of wire (wet with coil dope) which will fill 0.01-sq-in. cross section. For the ATR coil, the cross section is $0.125 \times 0.025 = 0.003125$ sq in. Therefore, the desired number of turns per 0.01-sq-in. cross section is 435. Number 38 wire

[2]H. B. Dwight, "Self Inductance of Short Reactance Coils," Electrical World, 1079 (May 25, 1918).

was chosen as a compromise. The measured value of induction was 119 μh because the as-built coil dimensions were greater than those calculated. The coil still worked very well giving the desired range and sensitivity. It is recognized that both calculations and curves are approximate, but the results are reasonably accurate and quite useful.

PROBE CONSTRUCTION

Once the coil design has been determined, it must be built and attached to a spring, wires, and handle to form a probe. The following technique has been successfully used at the Oak Ridge National Laboratory. The coil may be wound by first building a removable Teflon form as shown in Fig. 9a with the air dimensions of the form equal to the coil dimensions needed. One lead is passed outside through the gap between the form and lubricated rod. The coil is wound to fill the space with the desired number of turns of the proper size wire. As previously noted, the wire size required for the desired number of turns to fill the desired space may be estimated in the above tabulation. Coil dope is continuously applied to the wire during winding.

If the tension on the wire is too great as the coil is wound, it may tend to deform the Teflon. When the coil has dried, the form is removed. The coil is then glued to the probe head beneath the spring. Several types of probe heads have been constructed, one of which is shown in Fig. 9b. The head width is generally equal to or greater than two coil diameters so variations in the conductivity of the plate being measured will not be detected. For best results, the combined thicknesses of probe head, coil, and spring should be only slightly less than that of the minimum spacing. The tip above and below the coil limit the spacing being measured to a small area.

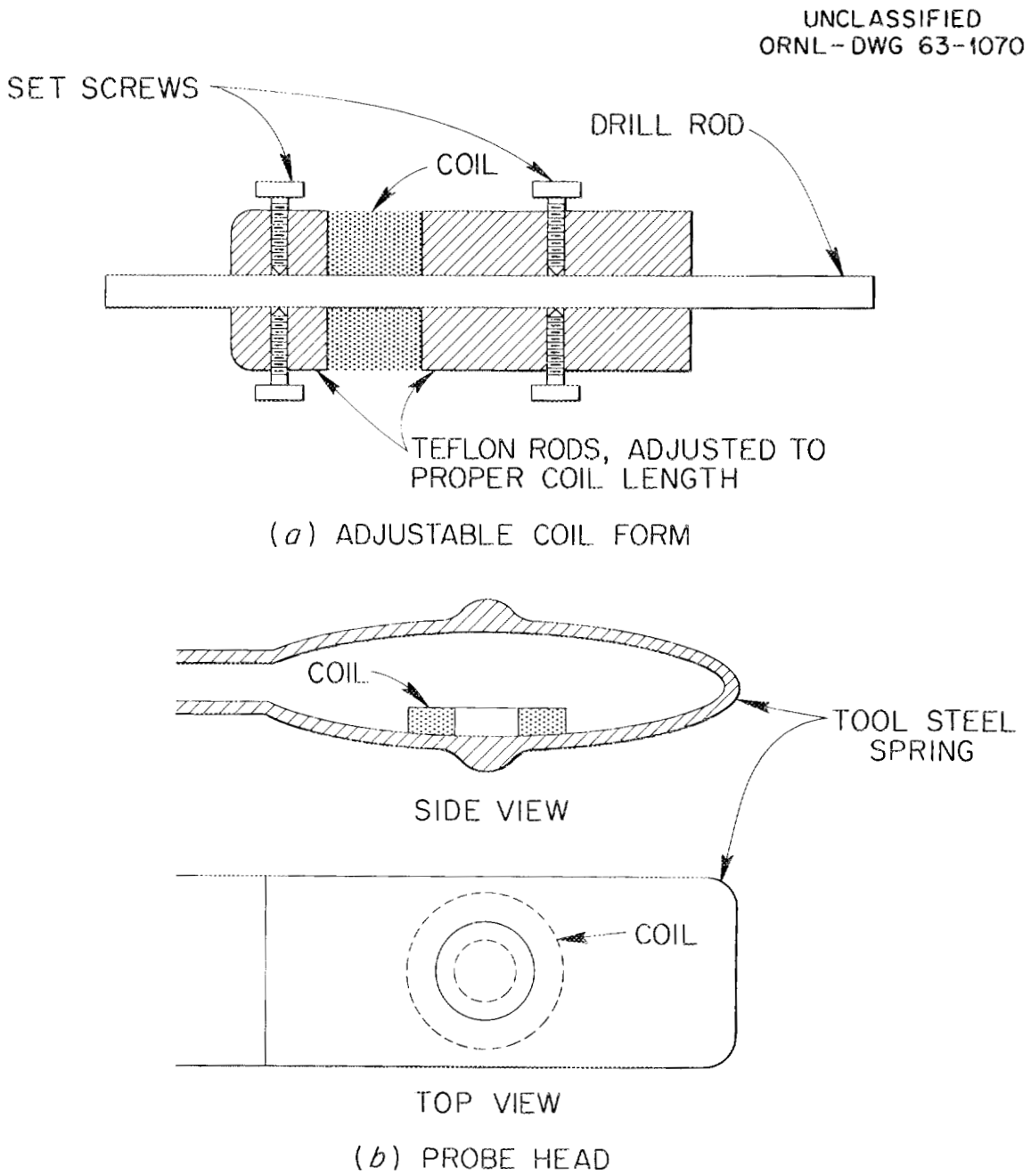

Fig. 9. Coil and Probe Head Construction.

The handle holding the probe head and carrying the coil leads back to the instrument must satisfy three requirements: (1) it must position the probe head properly; (2) it must provide electrical shielding for the coil leads; and (3) it must be strong and flexible enough not to break under repeated use in fuel elements. One type of handle has been constructed from rolled steel tubing containing lead wires or from rolled thermocouple tubing as shown in Fig. 10a. The probe head may be glued or otherwise attached to the handle. The handle may be soldered to a convenient holder (Fig. 10b) and a plug attached to carry the leads to the instrument used.

Several types of instruments may be used. One type is a balanced-bridge amplitude-sensitive instrument which will measure the differences in magnitude of impedance. These instruments are simple, cheap, and accurate enough for most uses. Commercial ones available include the Dermitron[3] and the Magnatest FM-100 and FM-102.[4] Other instruments are balanced-bridge amplitude-sensitive instruments which measure vector differences in impedance. These are more expensive but have a greater inherent sensitivity. Commercial units include the RADAC[5] and the Heat Check.[5] Other instruments capable of measuring the coil impedance can probably be used if proper consideration is given to impedance matching.

---

[3]Unit Process Assemblies, 53-15 37th Avenue, Woodside 77, New York.

[4]Magnaflux Corporation, 7300 West Lawrence Avenue, Chicago 31, Illinois.

[5]Instruments Division, Budd Company, P. O. Box 245, Phoenixville, Pa.

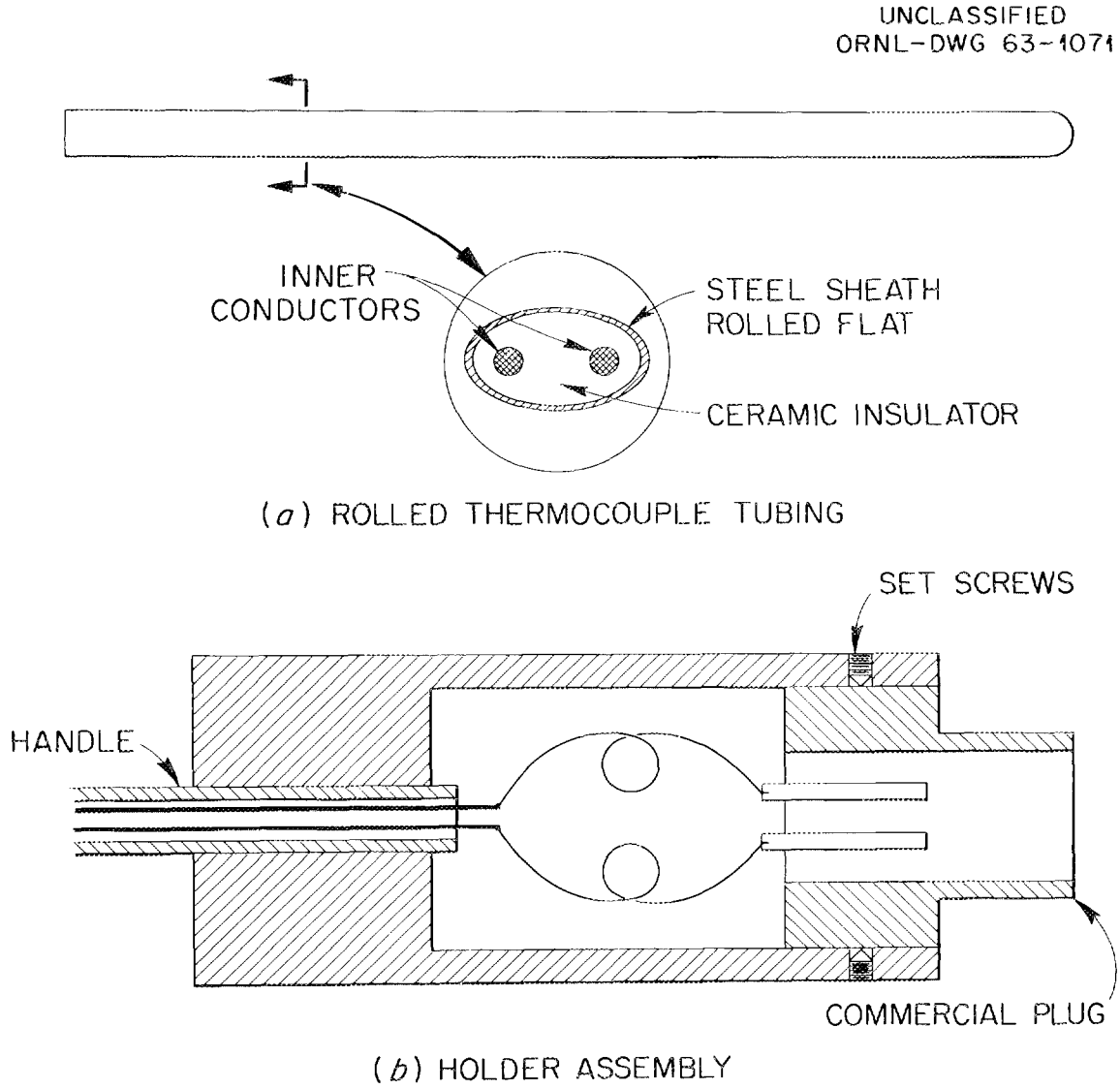

Fig. 10. Handle and Holder Construction.

CONCLUSIONS

Coolant-channel spacing may be measured using eddy techniques. The effects of the large number of variables which influence eddy-current spacing measurements may be graphically presented. From these graphs, optimum coil parameters may be chosen for particular applications. Using these methods, successful spacing probes have been designed and constructed at Oak Ridge for several applications.

ORNL-3580
UC-25 — Metals, Ceramics, and Materials
TID-4500 (27th ed.)

INTERNAL DISTRIBUTION

1–3. Central Research Library
4. Reactor Division Library
5–6. ORNL-Y-12 Technical Library
Document Reference Section
7–26. Laboratory Records Department
27. Laboratory Records, ORNL RC
28. ORNL Patent Office
29. T. V. Blalock
30. R. J. Beaver
31. S. E. Dismuke
32. C. V. Dodd
33. C. W. Dollins
34. D. A. Douglas, Jr.
35. J. H Frye, Jr.
36. R. G. Gilliland
37. F. M. Glass
38. S. H. Hanauer
39–43. M. R. Hill
44. P. G. Herndon
45. R. S. Holcomb
46. K. W. Knight
47. C. E. Larson
48. C. F. Leitten, Jr.
49. A. L. Lotts
50. J. L. Lovvorn
51. H. G. MacPherson
52–71. W. D. Manly
72. R. W. McClung
73. E. C. Miller
74. W. R. Mixon
75. S. A. Rabin
76. J. W. Reynolds
77. A. E. Richt
78. L. E. Standford
79. W. J. Stelzman
80. J. A. Swartout
81. J. R. Tallackson
82. L. H. Thacker
83. A. M. Weinberg
84. J. Zasler
85. A. A. Burr (consultant)
86. J. R. Johnson (consultant)
87. C. S. Smith (consultant)
88. R. Smoluchowski (consultant)

EXTERNAL DISTRIBUTION

89–90. D. F. Cope, ORO
91. Research and Development, ORO
92. C. M. Adams, Jr., MIT
93. D. E. Baker, GE Hanford
94. R. L. Brown, Jr., GE Hanford
95. Ersel Evans, GE Hanford
96. J. L. Gregg, Cornell University
97. H. L. Libby, GE Hanford
98. C. J. Renken, ANL
99. J. Simmons, AEC, Washington
100. E. E. Stansbury, University of Tennessee
101. D. K. Stevens, AEC, Washington
102–607. Given distribution as shown in TID-4500 (27th ed.) under Metals, Ceramics, and Materials category.