LOCKHEED MARTIN ENERGY RESEARCH LIBRARIES
3 4456 0443700 9

CENTRAL RESEARCH LIBRARY
DOCUMENT COLLECTION

ORNL-3533
UC-4 – Chemistry
TID-4500 (27th ed.)

THE PERFORMANCE OF AN ADVANCED EXPERIMENTAL STACKED-CLONE CONTACTOR: A HIGH-PERFORMANCE SOLVENT EXTRACTION MACHINE WITH POTENTIAL FOR APPLICATION TO VERY HIGHLY RADIOACTIVE SOLUTIONS

M. E. Whatley
W. M. Woods

CENTRAL RESEARCH LIBRARY
DOCUMENT COLLECTION
LIBRARY LOAN COPY
DO NOT TRANSFER TO ANOTHER PERSON
If you wish someone else to see this document, send in name with document and the library will arrange a loan.

OAK RIDGE NATIONAL LABORATORY
operated by
UNION CARBIDE CORPORATION
for the
U.S. ATOMIC ENERGY COMMISSION

Printed in USA. Price: $1.50 Available from the
Office of Technical Services
U. S. Department of Commerce
Washington 25, D. C.

LEGAL NOTICE

This report was prepared as an account of Government sponsored work. Neither the United States, nor the Commission, nor any person acting on behalf of the Commission:

A. Makes any warranty or representation, expressed or implied, with respect to the accuracy, completeness, or usefulness of the information contained in this report, or that the use of any information, apparatus, method, or process disclosed in this report may not infringe privately owned rights; or

B. Assumes any liabilities with respect to the use of, or for damages resulting from the use of any information, apparatus, method, or process disclosed in this report.

As used in the above, "person acting on behalf of the Commission" includes any employee or contractor of the Commission, or employee of such contractor, to the extent that such employee or contractor of the Commission, or employee of such contractor prepares, disseminates, or provides access to, any information pursuant to his employment or contract with the Commission, or his employment with such contractor.

ORNL-3533

Contract No. W-7405-eng-26

CHEMICAL TECHNOLOGY DIVISION

THE PERFORMANCE OF AN ADVANCED EXPERIMENTAL STACKED-CLONE CONTACTOR: A HIGH-PERFORMANCE SOLVENT EXTRACTION MACHINE WITH POTENTIAL FOR APPLICATION TO VERY HIGHLY RADIOACTIVE SOLUTIONS

M. E. Whatley
W. M. Woods

APRIL 1964

OAK RIDGE NATIONAL LABORATORY
Oak Ridge, Tennessee
operated by
UNION CARBIDE CORPORATION
for the
U. S. ATOMIC ENERGY COMMISSION

LOCKHEED MARTIN ENERGY RESEARCH LIBRARIES
3 4456 0443700 9

FOREWORD

The stacked-clone contactor enters the competition among high-performance solvent extraction contactors late, and it brings with it an entirely new mechanism of operation that gives it unique characteristics of performance which must be appreciated before it may take its proper place. It was born amid the ashes of an earlier attempt to use hydroclones in a solvent extraction contactor which failed because of the extreme complexity of the hydrodynamic balance of the system. This contactor was known as the "Pump-Clone" contactor, conceived by J. C. Bresee, and used pumps for mixing and hydroclones for phase separators. The hydroclones were used in a more conventional manner, two to a stage, intended to make as clean a separation of light phase from heavy phase as possible. These were then sent to the appropriate pump to pass through the cascade. It proved impractical only because the flow rate of each stream had to be measured and controlled. The stacked-clone contactor, on the other hand, uses the hydroclones in an entirely different manner, exploits the induced underflow effect, and because of its inherent stability, requires no interstage control. Another device, conceived by P. A. Haas, used vortex flow in a cylindrical cavity, moving the phases concurrently in each stage. This contactor was studied only briefly (perhaps insufficiently) and abandonded in favor of the stacked-clone contactor.

Credit for the successful completion of this phase of the development of the contactor must be shared between the authors and Guy Jones, Jr., as technician on the program who "groomed" and ran the contactor, collected the data, and quietly suffered the authors to impose numerous perversions of his well-laid-out operating procedure.

Credit is also due to A. C. Partridge, machinist, who excellently fabricated the many parts of the experimental contactors; L. R. Sullivan and R. C. Clemmons, pipefitters who assembled and disassembled the contactor between each series of runs; and to George Wilson's group in analytical chemistry who gave us routine analyses to a degree of accuracy which, although essential, we had no right to expect.

CONTENTS

		Page
1.	Abstract	1
2.	Introduction	2
3.	Principle of Operation of the Stacked-Clone Contactor and the Importance of the Underflow Chamber	3
4.	Description of Experimental Unit	9
5.	Status of the Experimental Program	15
6.	Capacity	19
7.	Stage Efficiency	25
8.	Holdup Time	27
9.	Entrainment	31
10.	Control	36
11.	Design Problems in the Stacked-Clone Contactor for Radiochemical Plant Use	39
12.	Considerations in Application	42
13.	Conclusions	45
14.	References	47
15.	Bibliography	48

THE PERFORMANCE OF AN ADVANCED EXPERIMENTAL STACKED-CLONE CONTACTOR: A HIGH-PERFORMANCE SOLVENT EXTRACTION MACHINE WITH POTENTIAL FOR APPLICATION IN VERY HIGH RADIATION FIELDS

M. E. Whatley W. M. Woods

1. ABSTRACT

A high-performance liquid-liquid extraction contactor, called the stacked-clone contactor, has been developed through the stage of identifying an optimum design of the configuration of the functioning components. The device consists of hydroclones cascaded such that the underflow port of each hydroclone communicates with the overflow of the one below by an underflow chamber. Each stage is comprised of a hydroclone, an underflow chamber, and a pump.

The contactor is under development for application with highly radioactive solutions where contact time must be minimized to reduce the degradation of the solvent by radiation damage. Contact times of less than 4.5 sec per theoretical stage have been reached in the experimental model, and contact times of less than 2.5 sec are probable by improving the design to eliminate nonfunctional volume.

The throughput of the experimental model was about 4 liters/min at a stage efficiency of 65 to 80%. The stage efficiency and entrainment was relatively independent of throughput. The performance of the contactor was temperature dependent. Although the unit does require pumps at each stage, there is only one control point necessary: the top interface.

The simplicity, stability, and rapid response of the contactor promise that it will be a very usable device. The principle of operation and the characteristics of the stacked-clone contactor are discussed in this report.

---

2. INTRODUCTION

Nuclear reactor technology has progressed to the point that high fuel burnups are now feasible. One reactor concept anticipates burnups as high as 100,000 megawatt days per ton of fuel. The reprocessing of such fuels with conventional solvent extraction contactors involves either long and costly cooling times or exposure of the solvent to radiation levels known to be intolerable. One approach to the solution of this problem is the development of solvent extraction equipment that will minimize the contact time. A very attractive device for this application is the stacked-clone contactor.

The stacked-clone contactor has reached a point in development where its basic principles have been proved, and the probability that it will find application in nuclear fuel processing plants appears high. There are areas of study that must be pursued quantitatively to properly define the limitations of this solvent extraction contactor and to determine where its unique properties can best be exploited. The newness of the concept of this device, and the vast areas of ignorance of the effects of various critical dimensions, and even the identification of which dimensions were critical, demanded an exhaustive parameter study over ill-defined paths to arrive at a design that would represent nearly optimum use of the inherent hydrodynamics of the device. This relegated the study of performance

variables to secondary importance. Though much data on operating performance was collected incidental to the main effort, it has not yet been organized.

This report is an answer to a demand for information on basic principles and operational characteristics to allow consideration of where the contactor would be useful, and the extent of the improvement it offers over other contactor types.

The voluminous data from the design-parameter study will appear in another report and will not be treated here. In this report, the principle of operation and the operational characteristics, as far as understood, will be put together in an attempt to describe a typical stacked-clone contactor, both with regard to what is known and with regard to what is expected in a plant unit. Also, sufficient schematic drawings and photographs will be given in order to provide information on the size and appearance of the contactors so that their applications can be better appreciated.

3. PRINCIPLE OF OPERATION OF THE STACKED-CLONE CONTACTOR AND THE IMPORTANCE OF THE UNDERFLOW CHAMBER

If a hydroclone is operated in such a manner that the underflow port communicates with a closed vessel, the rotary motion of the fluid within the clone will induce strong currents down the wall and out of the underflow port (Fig. 1). This outflow is balanced by an upward flow in the center of the vortex. This is known as the induced underflow effect. All hydroclones, then, have an inherent countercurrent flow at the underflow port when the net flow at the underflow port is less than the induced

UNCLASSIFIED
ORNL-DWG 63-4521R1

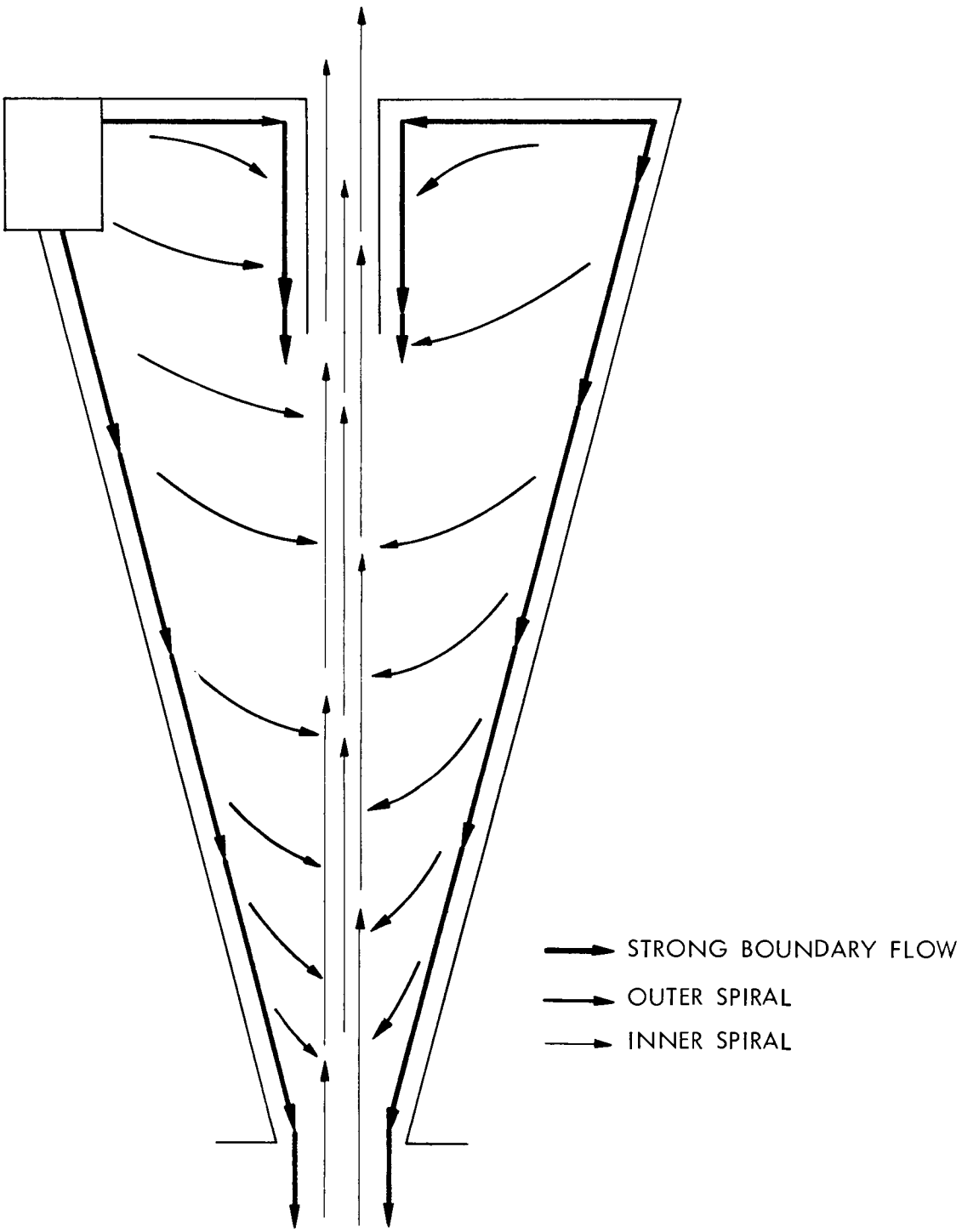

Fig. 1. Liquid Flow Pattern in a Conventional Hydroclone.

underflow rate. When a two-phase liquid-liquid system is present, the light phase is concentrated in the center of the vortex, while the heavy phase is thrown towards the wall by the centrifugal field. This two-phase countercurrent flow is the basis for the operation of the stacked-clone contactor.

Several hydroclones, each with its own pump, are used consecutively to form a cascade of stages. Adjacent hydroclones are separated by small chambers called underflow chambers, which receive the overflow from the clone below and present it to the underflow port of the clone above. Because the light phase is more highly concentrated in the center of this stream, it is drawn into the center of the underflow port and moves up the cascade. Heavy phase, more highly concentrated in the wall region of the hydroclone above, flows out at the periphery of the underflow port into the underflow chamber, where it is picked up by the stage pump and injected into the feed port of the clone below, and thus moves down the cascade (Fig. 2). The "top" stage (assuming the convention that the light phase leaves at the "top") discharges into a gravity settler by way of a small packed section, which stops the rotary motion and effects some coalescence of droplets. Since the device always operates with the light phase dispersed, the gravity settler produces a clean light phase. It is not necessary, however, to remove all of the light phase from the heavy phase, and the stream which recirculates from the bottom of the gravity settler through a pump back into the top stage usually contains from 10 to 20% dispersed light phase. This is roughly equivalent to the proportion of light phase which is recirculated in each of the pumps. Were it unnecessary to use a gravity settler at the top stage, the stacked-clone contactor

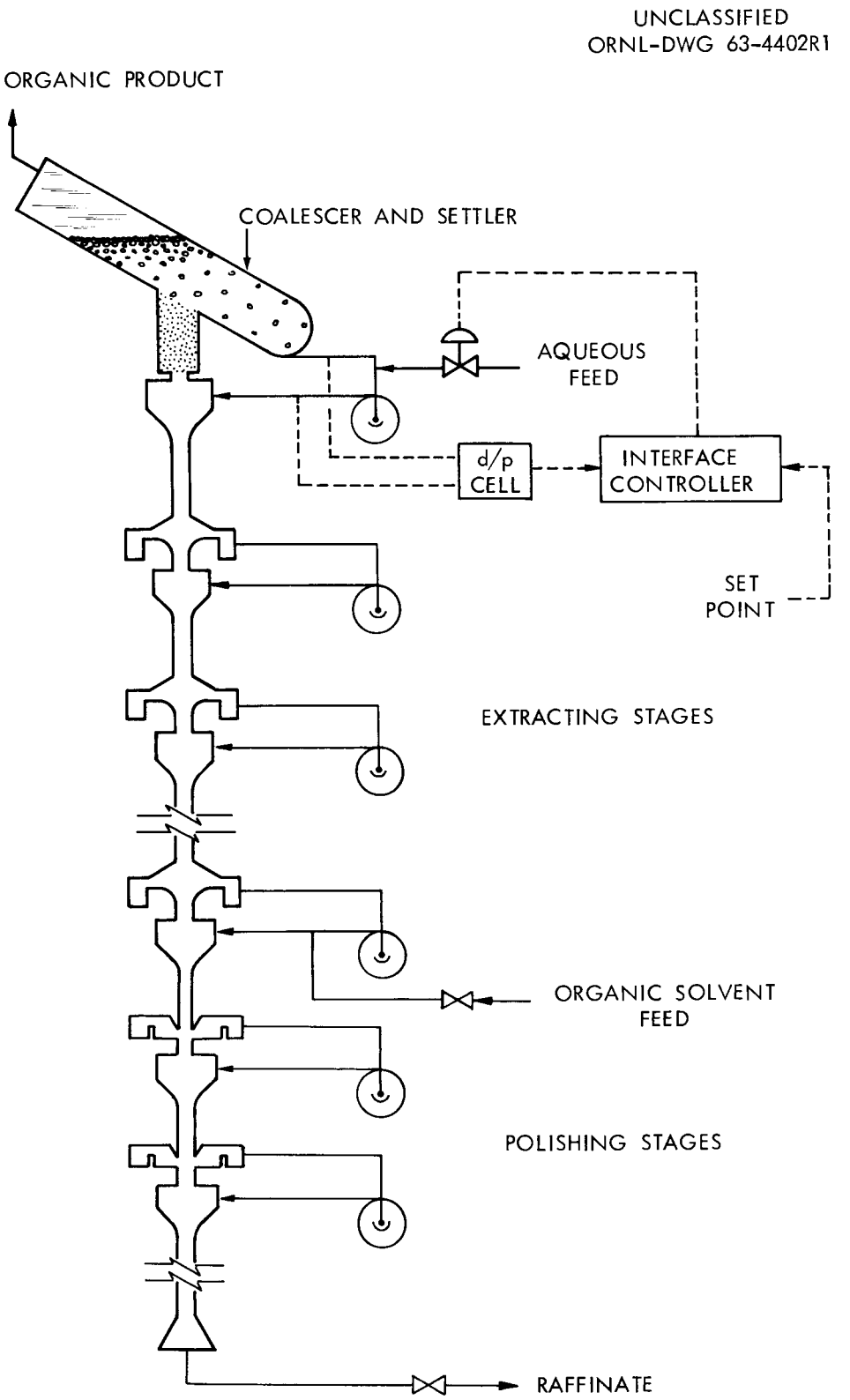

Fig. 2. Stacked-Clone-Contactor Cascade.

could operate upside down or in any aspect or, indeed, in a null-gravity field. At the bottom end of the cascade significant amounts of the light phase are entrained with the heavy phase in the underflow stream from the stage into which the light phase is fed. To cope with this, three or four stages, called polishing stages, are used below the light-phase feed stage to reduce entrainment from the cascade.

Some of the effects and phenomena characteristic of this device follow: The organic dispersion is extremely fine, with drop sizes (estimated from photographs) to be less than 10 μ. The light-phase dispersion is not restricted to the center of the vortex but is most highly concentrated there and grades out over the entire clone. The clearest heavy phase is found at the wall of the clone near the underflow port. Entrainment of the light phase with the heavy phase out of the underflow ports causes backmixing, which is a limiting factor in apparent stage efficiency. Similarly, since the light phase rising in the center of the vortex is not devoid of heavy phase, both phases are backmixed to some extent.

Because of the high shear rate in hydroclones and because of the very small droplet size, it is likely that local equilibrium is rapidly approached. Stage efficiency, therefore, depends to a large degree upon the adequate bulk mixing in each stage of the phases passing through it. Since the light phase passes through the center of the vortex and is held in such a small region, bulk mixing in the clone is probably limited. That is to say, the heavy phase may pass from an underflow port into a pump suction, be well mixed in the pump, discharged into the feed port of the clone, and follow the wall of the clone out through the underflow port without adequate mixing with the contents of the clone. Stage efficiency can be

increased by lengthening the clone body, by using a cylindrical shape at the underflow port, and by increasing the size of the underflow chamber.

The underflow chamber is a critical part of the device. Its functions are to:

1. effect mass transfer,
2. present the light phase to the underflow port, and
3. discharge to the pump suction a heavy phase as free of light phase as achievable.

The volume and configuration of the underflow chamber has been the subject of considerable thought and experimentation. An essential point is that radial symmetry of flow must be preserved. This was effected by use of a gap at the periphery of the underflow chamber such that a pressure drop of several inches of head across this gap assured equal distribution of flow. Without this the vortex was perturbed, and the capacity of the unit was drastically reduced.

There is considerable spin in the liquids in the underflow chamber since it is driven both above and below. It appears necessary that the angular velocity in the underflow port be greater than the angular velocity in the underflow chamber. If, however, the angular velocity in the underflow chamber is too low, the light phase does not concentrate in the center, and excessive amounts of light phase are carried into the pump suction, which decreases the capacity of the unit.

In this regard, a vortex finder in a hydroclone serves the primary function of reducing the by-pass from the feed port directly to the overflow port, but, in the stacked-clone contactor it also has the effect of reducing the angular velocity in the underflow chamber. The use of a

vortex finder was found to decrease the capacity and slightly increase the stage efficiency of the unit.

4. DESCRIPTION OF EXPERIMENTAL UNIT

The Mark X stacked-clone contactor is made of stainless steel and Lucite, shown assembled in Fig. 3. The feed blocks, made of stainless steel, accommodate inserts that define the lower half of the underflow chamber, the vortex finder, the feed port, and the upper part of the clone cavity. The feed block contains ports that conduct the fluid to the clone and out again to the pump. The inserts were made of Lucite. The clone body itself is of Lucite and contains the lower portion of the clone cavity and the upper portion of the underflow chamber (Figs. 4, 5, 6, and 7). The clone body is 1.5-in. in inner diameter at the top and tapers to a 1/2-in.-ID cylindrical section that extends to the underflow chamber. The underflow chamber is bounded on the top by a conical surface and on the bottom by a horn-shaped surface. These surfaces are separated by a 1/16-in. gap through which the fluid flows to an annular plenum from which the pump draws suction.

The pumps are connected to the feed blocks by 5/8-in.-OD polyethylene tubing. The pumps are standard Eastern Industries pumps, Model D-11, type 100 RST, made of stainless steel, with mechanical seals. The pump has a 3-3/8-in.-diam cavity. It has a shut-off pressure of 21.5 psig and will deliver 4.5 gpm at 20 psi and 7.5 gpm at 15 psi when pumping water. In the stacked-clone contactor these pumps run at about 4.5 gpm.

The bulk of the experimental data were taken by using four stages in countercurrent cascade operation plus three polishing stages below the

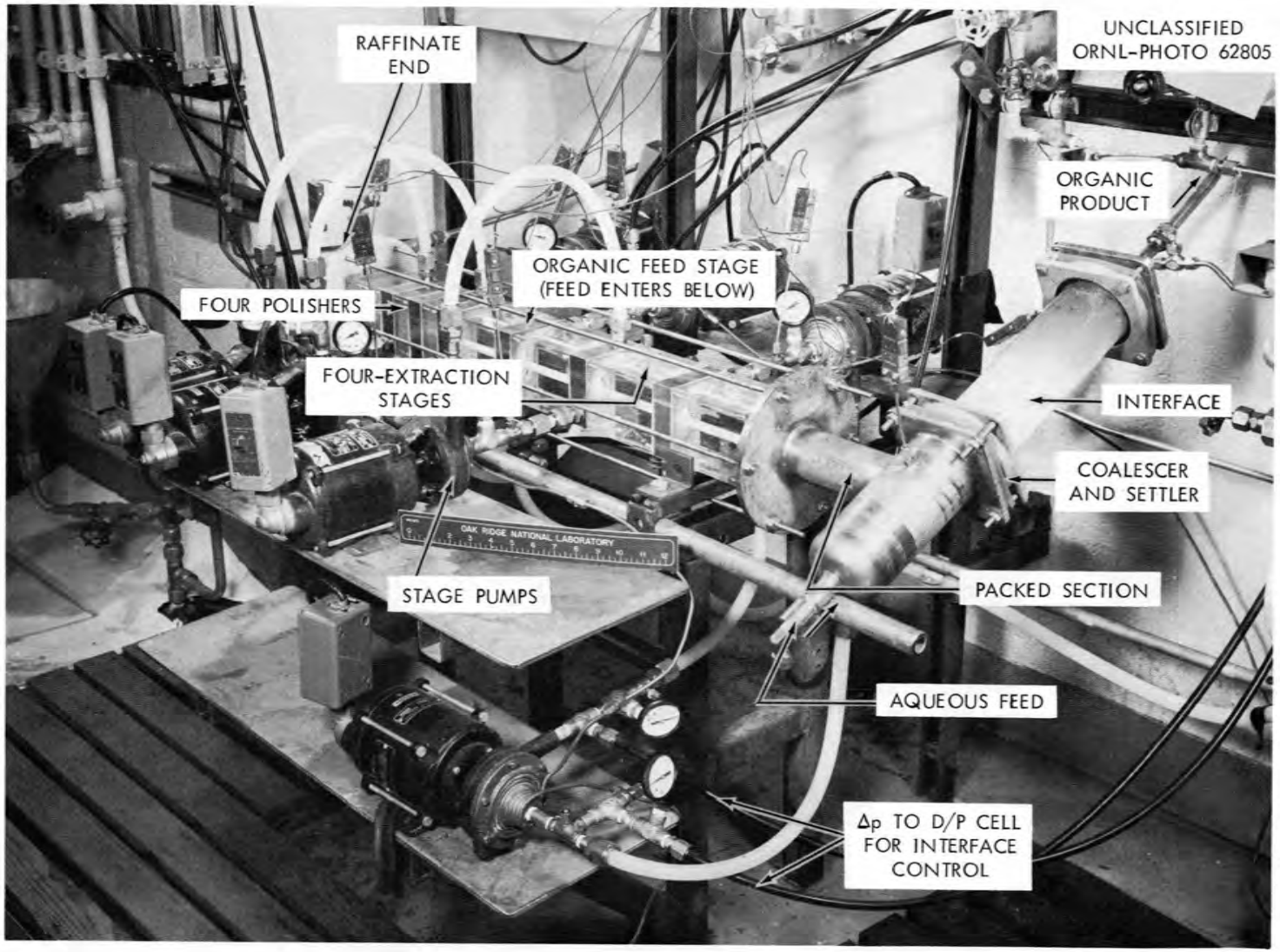

Fig. 3. Mark X Stacked-Clone Contactor Shown Operating with Four Extraction Stages and Four Polishers.

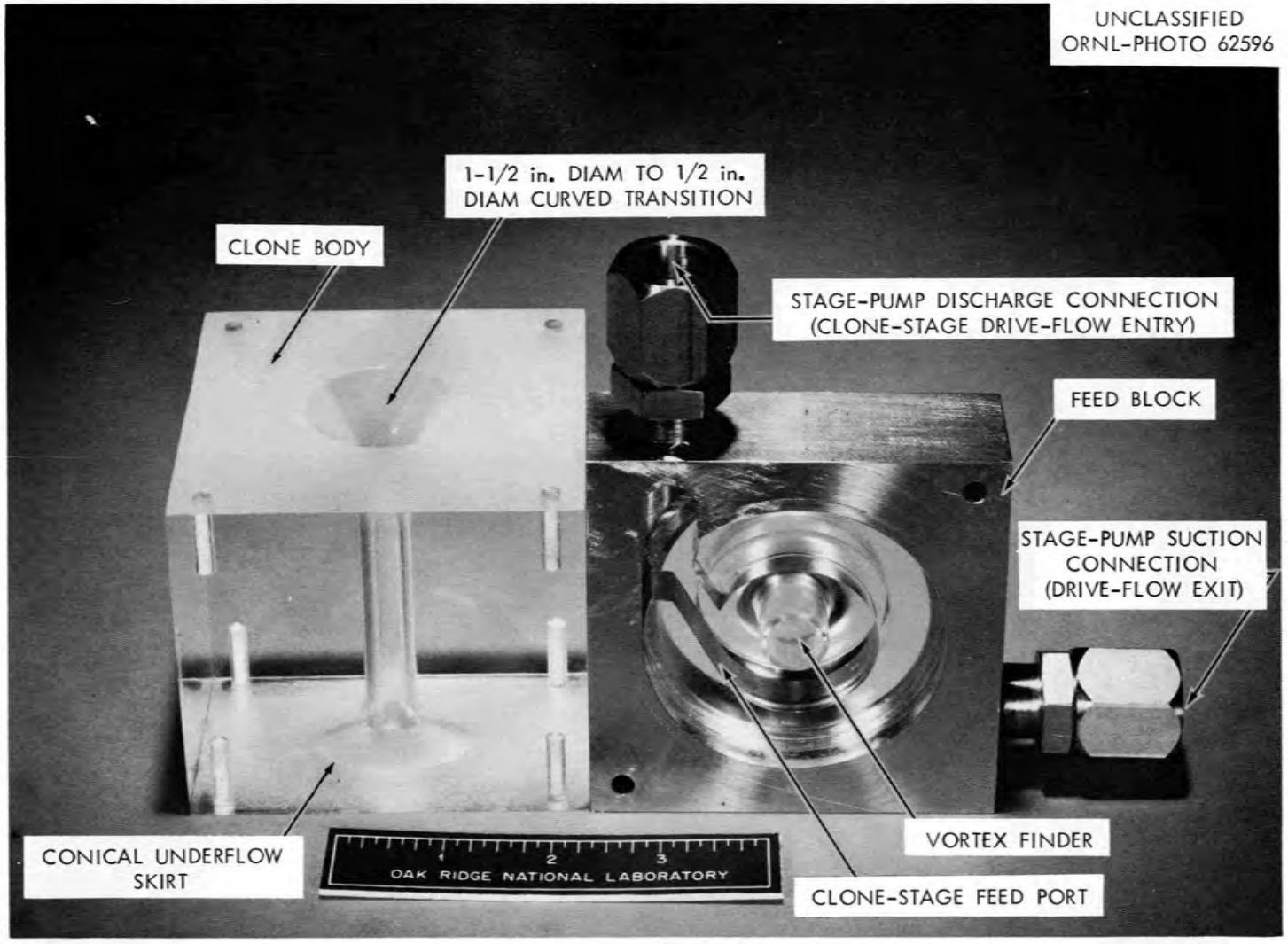

Fig. 4. Clone Body and Feed Block, Feed Port View. The feed block stacks on top the clone body, vortex finder down.

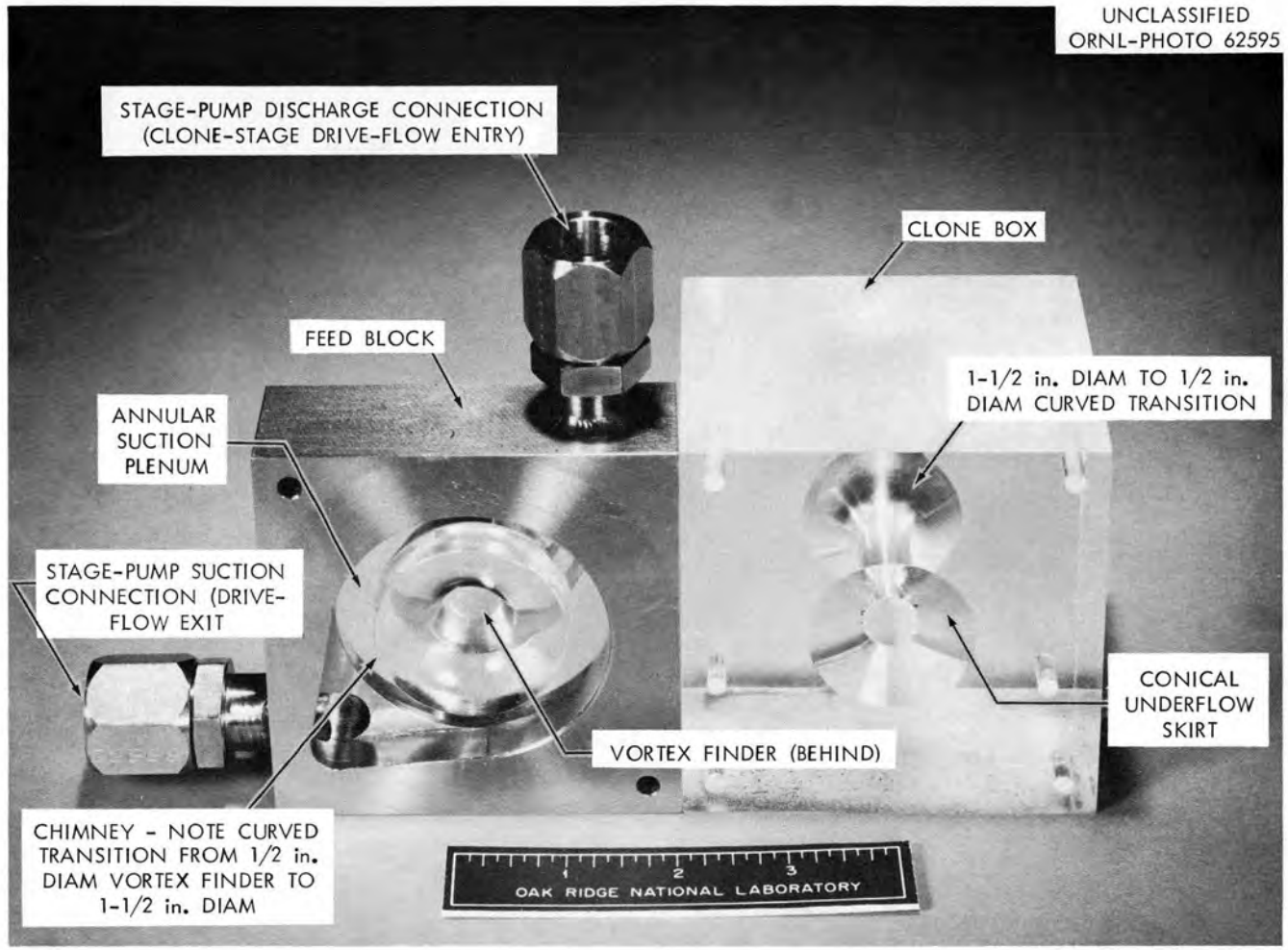

Fig. 5. Clone Body and Feed Block, Underflow Chamber View. The clone body stacks on front of feed block, underflow skirt toward chimney. The underflow chamber is defined by the curved surface of the chimney and the conical surface of underflow skirt. There is an axial gap between the chimney and the clone body when the parts are assembled.

UNCLASSIFIED
ORNL-PHOTO 62594R1

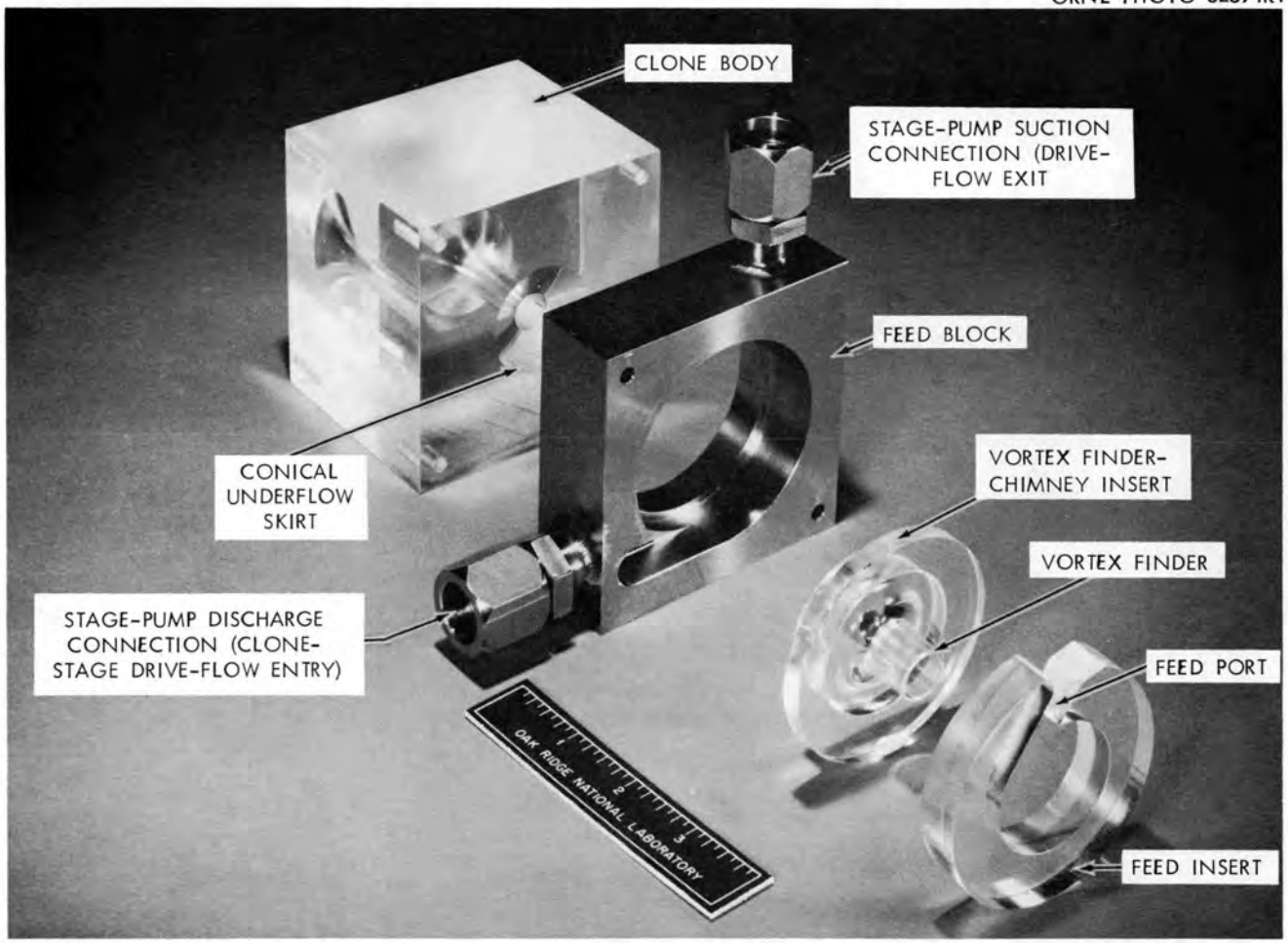

Fig. 6. Clone Body, Feed Block, and Inserts, Exploded View. The parts shown (plus a pump and lines) assemble into one typical stage. Several stages stack, one on the other, to comprise a cascade.

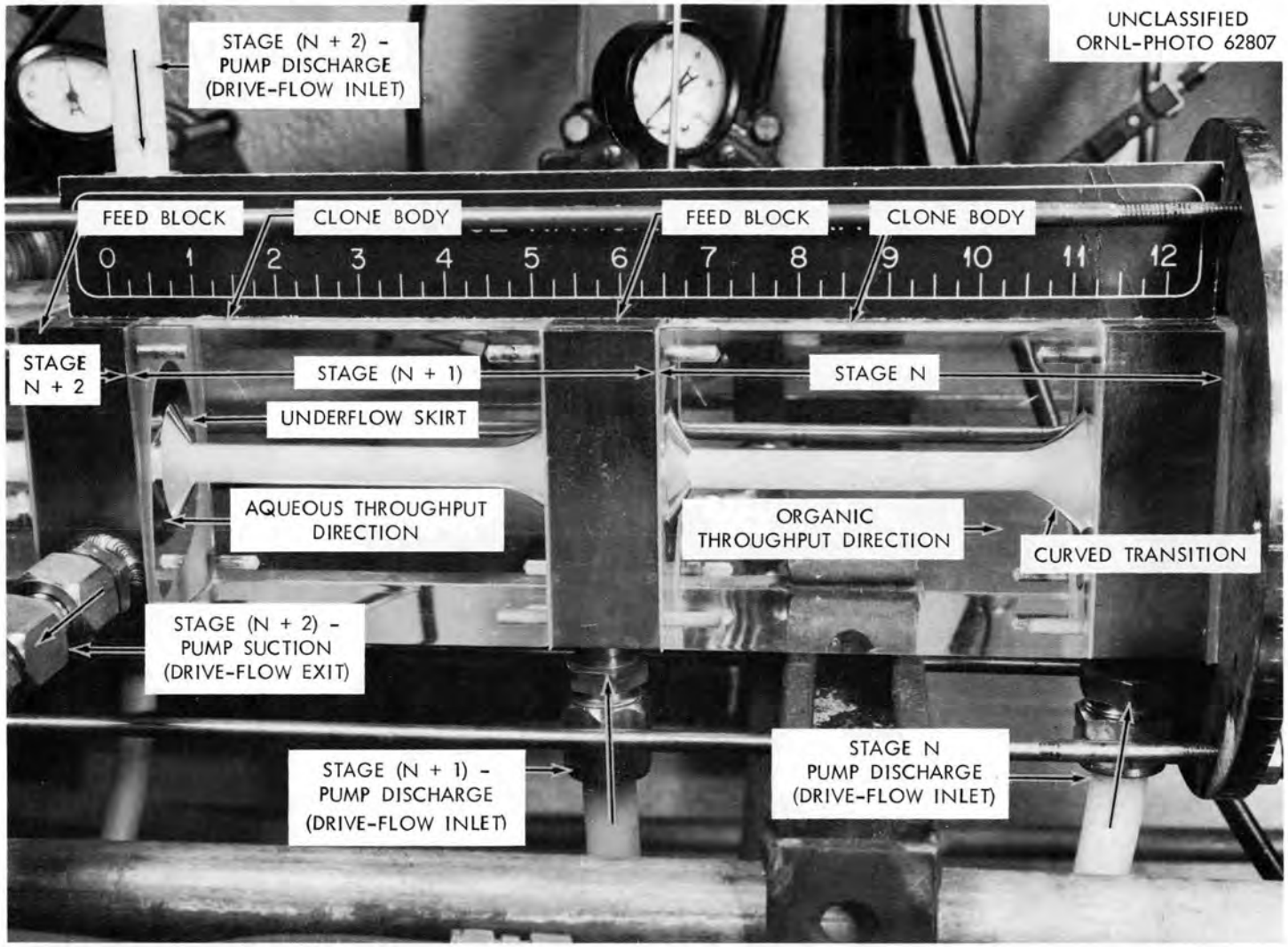

Fig. 7. Extraction Stages Assembled and Operating. The stages stack end to end. Operation in horizontal attitude illustrates the independence of the contactor on the direction of gravity.

stage into which the organic solvent was fed. The bottom polishing clone discharged its underflow into the apex of a conical chamber with an included angle of 60°. This chamber was 2 in. long. The settling section at the organic solvent discharge end consisted of a 5-in. section of 2-in. pipe packed with 1/4-in. plastic Raschig rings discharging into an inclined settler (30° to horizontal) made of 3-in. pipe. The aqueous phase was withdrawn from the lower end, which was 5 in. from the mixed-phase inlet. The length of inclined section was 20-in., of which the top 12-in. was glass pipe. The interface in the system was controlled about half way up the glass section by a pressure signal from the pump driving the top stage. This signal was sent to a differential pressure cell calibrated for full-scale output over a 4-psi variation of input, and with zero suppression to correspond to the maximum expected organic-phase recirculation. The signal from the differential pressure cell was sent to a controller that actuated the feed-inlet valve. The raffinate exit flow and the organic solvent inlet flow were manually set. The product organic solvent was withdrawn over an elevated weir. A photograph of the assembled device is shown in Fig. 3.

5. STATUS OF THE EXPERIMENTAL PROGRAM

The physical aspects of the stacked-clone contactor have, in principle, been established and tested over a wide but not exhaustive number of variables. The experimental program was concerned primarily with the problem of establishing a good workable stage design. The variables included shape, volume, and length of the clone body, the shape and volume of the underflow chamber, the relative sizes of the feed ports and vortex finders,

and the dimensions of the gap through which the recirculating pump draws suction.

The evolution of the design was based on observed trends and intuition. Theory and previous technology were of little assistance, and many apparently anomalous effects were noted. The criteria for good configurations were throughput, holdup volume, and stage efficiency. The measurement of stage efficiency with sufficient accuracy, to allow a comparison of alternate configurations, proved formidable. The pursuit of the objective of determining a good design required the elimination of as many extraneous variables as possible. Hence, at this point in the development program, when the stated objective has almost been attained, it is found that information on many important aspects of the stacked-clone contactor is fragmentary and ill-reported. Many problems associated with the contactor were solved as a matter of expediency, and many effects that were noted were studied only so far as to allow the experimental program to be placed in a reasonable operating realm. These include:

1. the organic entrainment in the aqueous raffinate,
2. the design of the settling section at the organic product end,
3. the effect of temperature on performance,
4. the effect of A/O (flow ratio, aqueous phase/organic phase) on performance,
5. the effect of physical properties of the system,
6. the effect of pump pressure for the recirculating streams, and
7. the control of the interface at the organic product end.

In some cases the problems have been adequately solved, and further improvement is either unwarranted or improbable. In others, uncertainty exists.

The experimental program investigated five basic types of contactors: Mark I, II, III, IV, and X (or Mark XI). These are shown in section in Fig. 8. About 1000 runs have been made to date.

Entrainment was controlled by the use of polishing stages below the extraction cascade. Several types of clones were tried, and the Mark IV type was the most effective. The settling section on the product end of the cascade evolved through about three basic designs, the latest of which appears to be quite effective and is standard for a large part of the study. Pump pressure was studied briefly. It was found that increasing the pump pressure improves the performance of the contactor only slightly and that pump pressures between 15 and 20 psig are probably optimum from a practical point of view. No pump development program was pursued.

The effect of temperature on the system's performance was realized after the experimental program had gotten under way. The magnitude of its effect was astounding. An increase of 10°C in operating temperature increased the throughput by 20 to 30% and significantly increased the stage efficiency. Energy from the recirculating pumps is sufficient to cause a significant temperature rise above ambient when the throughput rates are low. It was this effect that first called attention to the need for temperature control. The equilibrium line for the solvent extraction system is also temperature dependent.

There have been only three chemical systems run in the stacked-clone contactor: benzoic acid distributed between water and Supersol, benzoic acid distributed between water and Amsco, and uranyl nitrate distributed between an aqueous phase of 1 M sodium nitrate and an organic phase of 18% TBP (tributyl phosphate) in Amsco (a commercial kerosene-type hydrocarbon).

UNCLASSIFIED
ORNL-DWG 63-2915

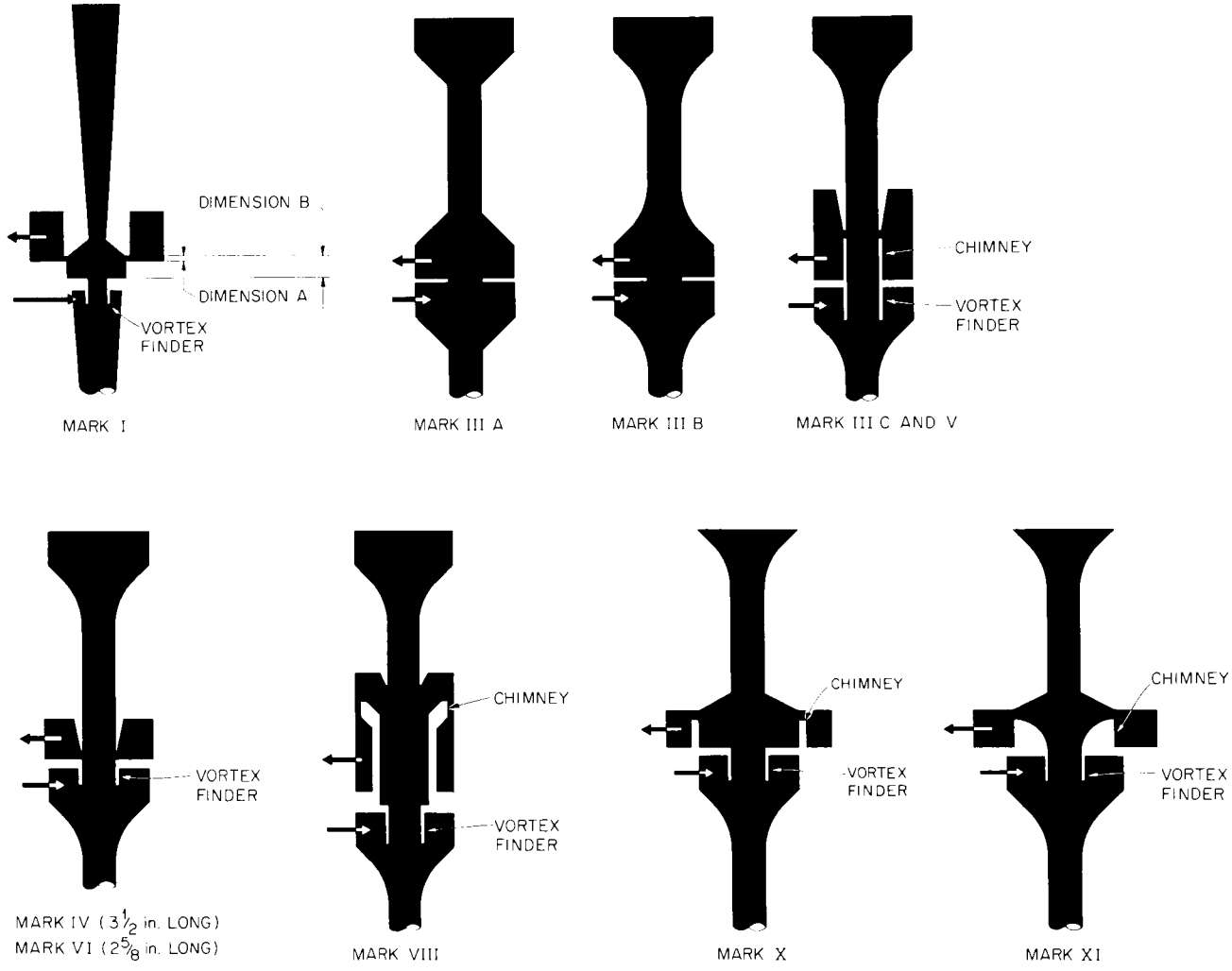

Fig. 8. Shapes and Underflow Chambers of Stacked-Clone Contactors.

Experimental runs were standardized at flow ratios (A/O) between 2 and 4, temperatures at 35 and 40°C, and flow rates between 50 and 100% of flooding.

The next phase of the development program will be concerned with:

1. The design and fabrication of a stainless steel radiochemical plant prototype of the high-speed contactor to be tested in actual use.
2. A further study of the effect of different chemical systems, the effect of flow ratios, the effect of low flow rates, the operation of a larger number of hydroclones, organic holdup in the system, and entrainment.

6. CAPACITY

The capacity of the stacked-clone contactor is a function of the design, the physical properties of the chemical system, and the ratio of the aqueous and organic flowrates. Capacity is only a weak function of the recirculating pump pressure.

Throughput in a solvent extraction contactor can be limited by any one of several things. For the systems run in the developmental program, there was little difficulty in providing an adequate settling section at the top end of the cascade to handle the highest flowrates. The capacity of this unit is limited then by the entrainment of organic in the aqueous raffinate which rapidly increases at flooding. When the unit is operating below flooding flowrates, the polishing stages function well, and the amount of entrainment increases gradually with increasing throughput, but remains small. Flooding is characterized by a step increase in organic solvent

holdup throughout the cascade. The excess organic feed is rejected at its point of introduction, and forced into the polishing stages, which load rapidly, passing it out with the raffinate. The increase in organic-solvent holdup is visually apparent and also causes a noticeable decrease in the pressure developed by the recirculating pumps. Flooding points can be reproduced in the experimental equipment within about 2%.

The contactor appears to work best at flowrate ratios (A/Φ) above 3. When the locus of the flooding point is plotted (organic solvent rate vs aqueous rate), a nearly straight line is produced (Fig. 9), which corresponds to an equation of the form:

$$\Phi = \Phi_o - kA$$

for contactors of the latest (Mark X) type. When expressed in terms of a total throughput,

$$F \equiv A + \Phi ,$$

the equation becomes:

$$F = \Phi_o \frac{(1 + A/\Phi)}{(1 + kA/\Phi)} .$$

The device operates well at an A/Φ of 1, but, at an A/Φ of 4, the stage efficiency is slightly better, and, as can be seen from Fig. 9, the total throughput is up by a factor of 1.44. At an A/Φ of 5.5, the stage efficiency is still high. Higher A/Φ's have not been explored. It is anticipated that stage efficiency will begin to fall off at very high A/Φ's. For the extraction system: 1 M $NaNO_3$ - 18% TBP in Amsco, transferring uranyl nitrate, Φ_o is about 2000, and k is 0.3225, which gives a throughput of about 4 liters/min at an A/Φ of 3. The parameter Φ_o changes with variations in contactor design, but k is essentially constant. This is shown in Fig. 10 by the application of this correlation to runs with several

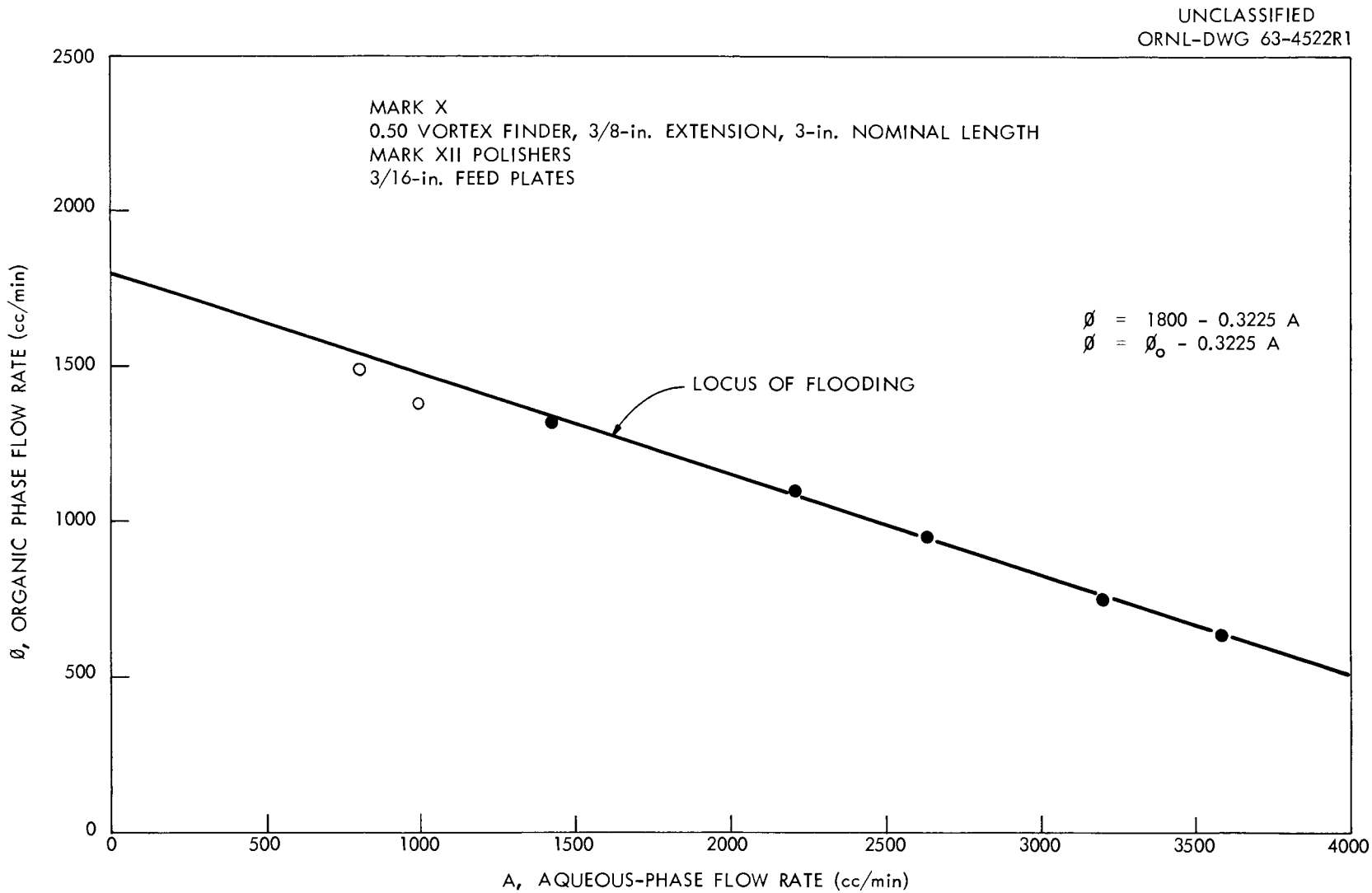

Fig. 9. Effect of Relative Flow Rates on Flooding in the Stacked Clone Contactor.

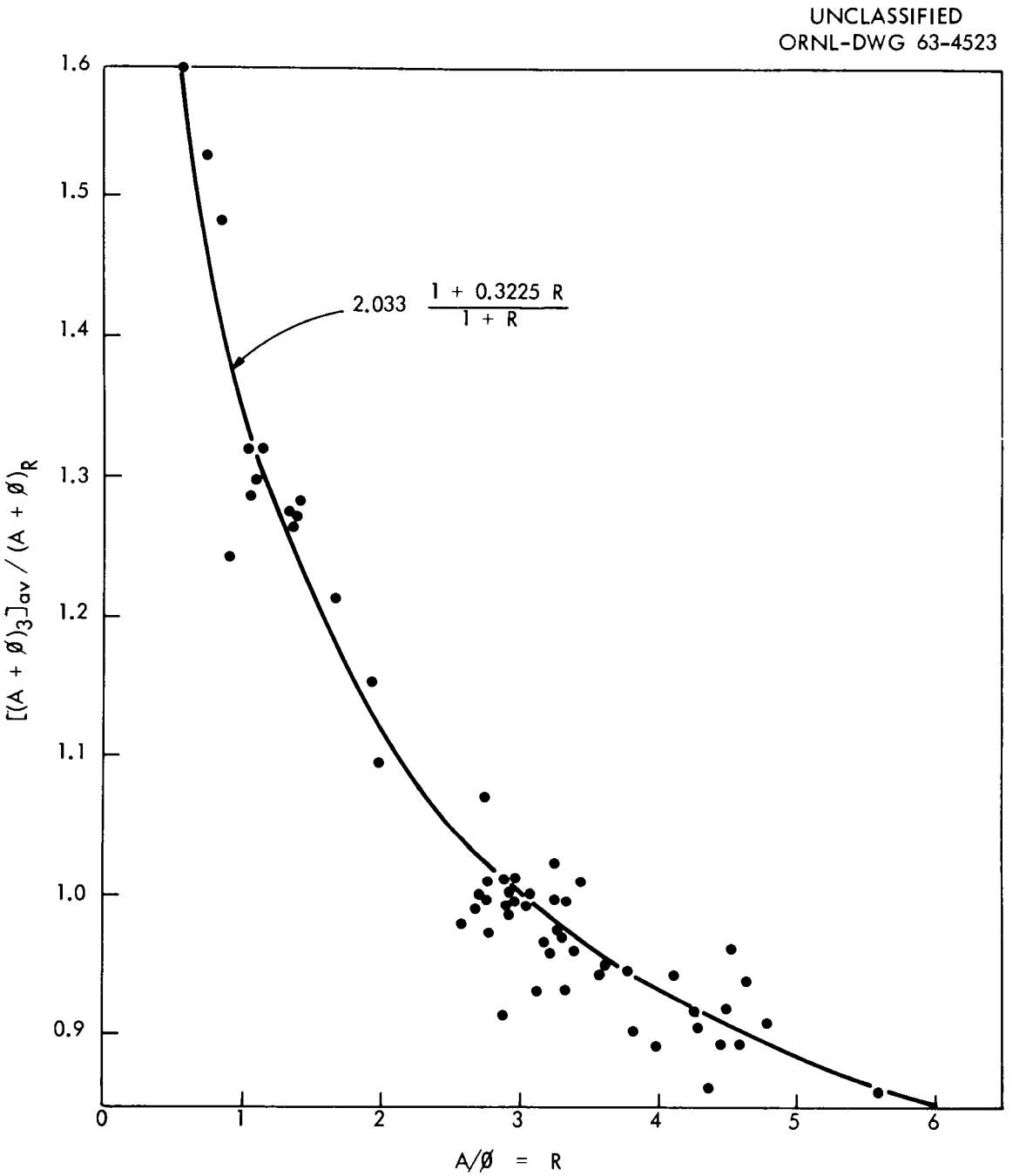

Fig. 10. Flooding Correlation for Mark X Type Stacked-Clone Contactor.

variations of the Mark X type contactor. All the points of the run were corrected to flow rates at an $A/\Phi = 3$, using the correlation, and then averaged to give a number that characterized the contactor. The ratio of the throughput at various A/Φ's to this average value fit the correlation within the experimental error, which could be true only if k were constant.

It is known that the capacity of the stacked-clone contactor is very sensitive to the liquid-liquid system. For example, the Mark I contactor had been run with 0.08 M HNO_3 and Supersol (a purified kerosene fraction), transferring benzoic acid. But, because it was more readily available, Amsco (a supposedly similar kerosene fraction) was substituted for Supersol. For this different system, the capacity of the unit with Amsco was only 70% of that with Supersol.

On later designs, the information on the effect of system properties is restricted to the effect of temperature, and only fragmentary information is available. With the Mark IIIC contactor, using the uranium system and operating at 30, 35, and 40°C, the stage efficiency was increased from about 30% to about 60%, and the throughput increased about 3%/°C. With the Mark IV contactor operating at 32 and 40°C, the stage efficiency increased from 30 to about 50% with increasing temperature, and the throughput increased about 2%/°C. The physical properties of the solutions used in these tests are given in Table 1. The most marked change was the viscosity of the aqueous phase, but the interfacial tension also increased about 10%. The change in density difference appears to be insignificant. It is more easily understood why the throughput should change than why the stage efficiency should change. The diffusivity of the uranium should increase between 2 and 3%/°C with increasing temperature; however, the concept of very rapid local equilibrium tends to negate its effect.

Table 1. Physical Properties of the System: 1 M $NaNO_3$ - 18% TBP in Amsco, Used in the Extraction of Uranyl Nitrate in the Stacked-Clone Contactor

Temperature (°C)	Aqueous Phase Density (g/cc)	Aqueous Phase Viscosity (cp)	Organic Phase Density (g/cc)	Organic Phase Viscosity (cp)	Density Difference (g/cc)	Interfacial Tension (dynes/cm)
25	1.0505	0.8705	0.7865	1.4247	0.2640	13.00
30	1.0455	0.7842	0.7825	1.3159	0.2630	13.05
35	1.0410	0.7385	0.7790	1.2094	0.2620	13.60
40	1.0360	0.6995	0.7750	1.1480	0.2610	14.10
45	1.0315	0.6658	0.7715	1.1004	0.2600	-
47	-	-	-	-	-	14.30

It must be concluded that the contactor works well with the systems tried. There will certainly be systems for which the contactor will not work, but it must be expected that there will be systems for which the contactor will work better than it has for those tried so far.

7. STAGE EFFICIENCY

The stage efficiency of the stacked-clone contactor is a function of the contactor design, the system being run, and the flowrate ratio. Almost all stage-efficiency studies were made with throughputs between 50% of flooding and flooding. There is good evidence that stage efficiency decreases below 50% of flooding. Above 50% of flooding, the evidence is that stage efficiency increases slightly with throughput to a maximum at 80 to 85% of flooding, with a slight decrease thereafter. Figure 11 shows the ratio of the point-efficiency to the average efficiency for the entire series plotted as a function of per cent of flooding. This figure also shows the least-squares regression line for a second-degree fit to the data. The equation of the regression line is:

$$E/\overline{E} = -6.848 \times 10^{-5} + 2.698P - 1.733P^2 ,$$

where E is the point efficiency, $\overline{E}$ is the average efficiency for the entire series, and P is the per cent of flooding.

Increasing the pump pressure from 15 psi to about 25 psi produced no significant improvement in stage efficiency. There are no valid data available to compare stage efficiencies with different chemical systems. From studies with contactor types IIIC and IV, which had inherently low stage efficiencies, efficiencies for uranium extraction were found to improve markedly with increases in temperature.

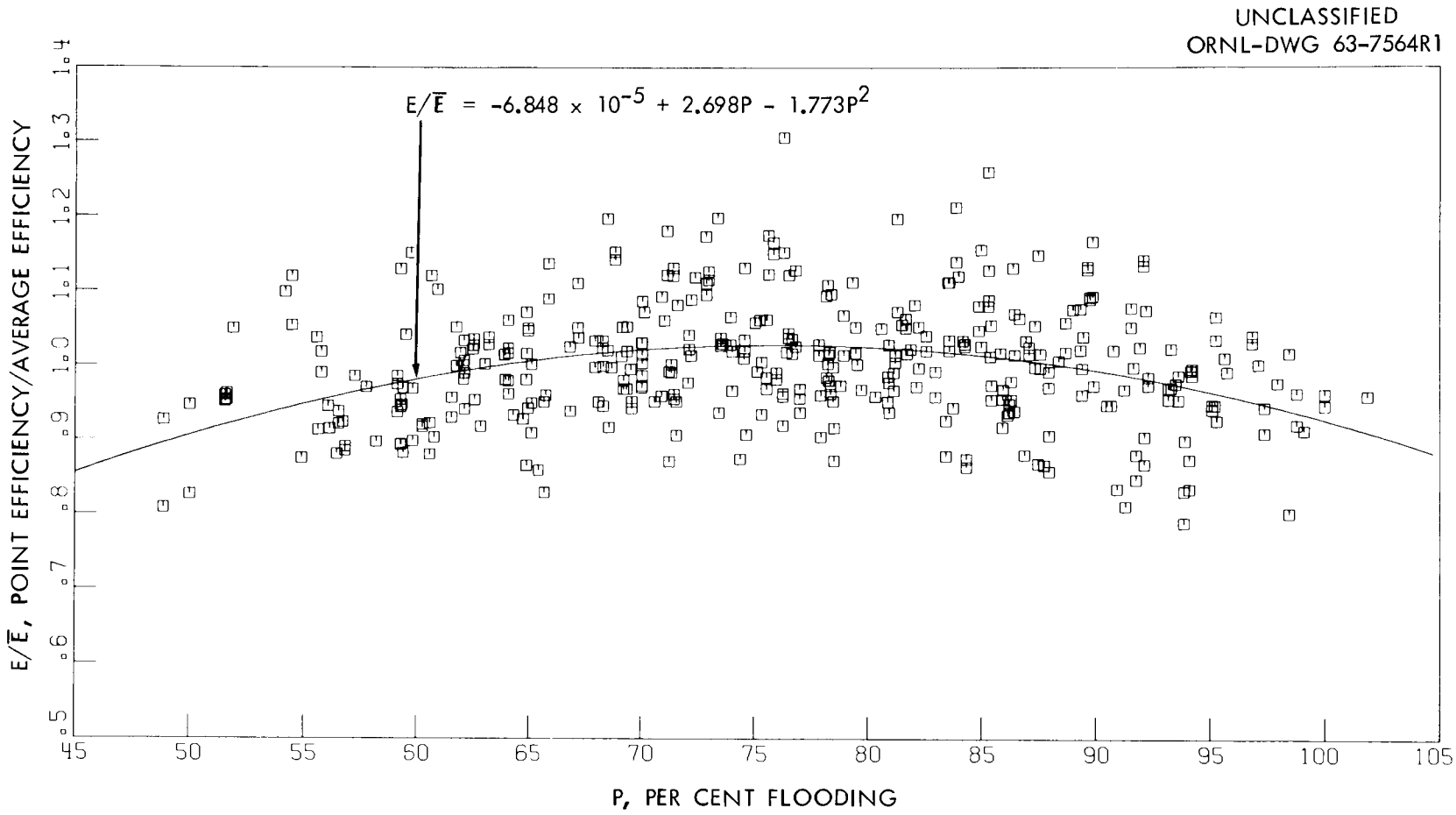

Fig. 11. Effect of Throughput on Stage Efficiency.

The effect of flowrate ratio on stage efficiency is probably significant. Studies with the Mark X contactor and the uranium system showed that a contactor which would develop 65 to 70% stage efficiency at an A/Φ of 3 developed a stage efficiency of about 55% at an A/Φ of 1. Stage efficiency has not been observed to decrease at flowrate ratios as high as 5.5. Still, this effect will be quantitatively ascertained and extended in further work.

Studies on the design parameters of the contactor showed that changes which increase stage efficiency frequently decrease capacity, and vice versa. Throughputs in excess of 6 liters/min have been obtained with stage efficiencies of about 30%, and stage efficiencies approaching 90% have been achieved at throughputs slightly under 2 liters/min. Designs are now available which will develop stage efficiencies between 65 and 80% at throughputs between 4 and 4.5 liters/min with the uranium system. Slight improvements over this may still be made.

8. HOLDUP TIME

One of the most important considerations in evaluating the utility of a high-speed contactor for high-level radiochemical work is the amount of radiation damage to the organic solvent which will occur during its residence. This depends upon the kinds of radiation involved, the types of exposure involved, and the duration of these exposures. Applications exist for high gamma radiation fields, high beta emitters, high alpha emitters, possibly neutron emitters, and possibly some spontaneous fission. Since in the cases of spontaneous fission and neutron emitters the radioactive material will probably be extracted into the organic, there is less to be gained by the use of a high-speed contactor. Subsequent discussion will

be restricted to the case where the emitting material remains in the aqueous phase.

The range of an alpha particle in water is very short, a 7-Mev alpha penetrating only about 80 μ. The range of a beta particle is short but much longer than that of an alpha particle. A 1-Mev beta particle can penetrate as far as 5 mm in water; however, most of its energy is lost in less distance. The short range of these particles suggest that the radiation damage would be proportional to surface. Since mass transfer is proportional to surface, there appears to be an impasse from the presumption that as mass transfer is increased by increasing the surface area radiation damage is also increased. This argument is, however, erroneous when the dispersed droplets are reduced to dimensions small compared with the path length of the ionizing particles. In this high-speed contactor the droplets are in the range of 10 μ or smaller. The flux of beta and alpha particles would be seen to be only slightly depressed in the center of these droplets. In pulsed columns and mixer-settlers, where the droplet size is in the range of 2 to 4 mm, there would be an increase in radiation damage as mass transfer was increased by decreasing droplet diameter. However, radiation damage is not further significantly increased when the droplet size is decreased beyond about 100 μ, but the mass transfer rate does continue to increase. The radiation damage to the organic solvent in the high-speed contactor then would be expected to be higher per unit time than in a mixer-settler or a pulse column but would not be proportional to the mass transfer rate.

Because gamma radiation is very penetrating, the radiation damage would be proportional to the intensity of the field and therefore to the

amount of radioactive solution in the cell with the contactor. It has been the objective of the stacked-clone contactor to reduce both the time of intimate contact with the solvent and the total volume of radioactive solution in the cell.

The solvent extraction job that a contactor must perform is specified by the flowsheet and is given in terms of theoretical stages required. Commonly, flowsheets in radiochemical work require between 5 and 10 theoretical stages both in the extraction section and in the strip section. Therefore, an important number in evaluating a high-speed contactor is the characteristic residence time per theoretical stage. Pulsed columns and mixer settlers being used in Purex type flowsheets have residence times of about 30 sec per theoretical stage. This varies some with different systems and operating conditions.

In contrast gross holdup times for the experimental Mark X model, for which minimum volume was not an objective, were less than 4.5 sec. This facility used exterior pumps connected to the system with 32 in. of 5/8-in.-OD plastic lines per stage. The volume of the components of the stacked-clone contactor (Mark X) are given in Table 2. The holdup volume of the various designs studied after Mark I varied only slightly since all were of 1.5-in. nominal diameter. The hydroclone cavity plus the underflow chamber contained about 45 cc of liquid. The plenums, ports, and ducts in the feed block surrounding the hydroclone cavity contained about 24 cc. This porting is necessary, and this volume is probably close to the minimum obtainable. The pumps held 41 cc of liquid, and the lines connecting the pumps to the feed block contained over 100 cc. At least 80% of the line volume could be eliminated. The pumps used in the experimental model were of the standard

Table 2. Volumes of Components of Mark X Stacked-Clone Contactor

	Volume (cc)	Ultimate Anticipated Volume (cc)
Hydroclone cavity	34.5	34.5
Underflow chamber	10.1	10.1
Feed block (plenums, ports, and ducts)	23.8	23.8
Pump	41.0	25.0
Pump-connecting lines	103.0	21.0
Volume per stage	212.4	114.4
Product-end settling section	2490.0	3000.0

open-impeller type, and the pump volume could easily be reduced to about 60% of its present volume. Were these modifications made, the contact time could easily be reduced to less than 2.5 sec per theoretical stage and perhaps to 2 sec.

The organic phase holdup in an extraction stage has been as high as 30% and as low as 10%. Precise numbers on the later designs of clones are not available. Earlier studies showed that organic phase holdup is a stronger function of rate (percentage of flooding) than of flowrate ratio (A/Φ). It is expected that the liquid in the clone cavity contains a larger fraction of organic phase than the liquid in the pumps.

Below the extraction section it is necessary to have about four polishing stages. These stages contribute only slightly to the radiation exposure of the solvent. The solvent inventory decreases rapidly after the first polishing stage so that the contribution is primarily due to the inventory of radioactive solutions.

The largest volume in the contactor is in the product-end settling section, where nearly 3 liters of liquid will reside. Although the droplets in the settling section are larger than the droplets in the stages, they are probably still below the critical size where self shielding from beta and alpha radiation becomes effective. Further, this volume of highly radioactive solutions would constitute a sizeable source of gamma radiation inside the cell. The detrimental effects from such an end section can largely be eliminated if the contactor is used as a compound contactor and the end section is filled with relatively clean scrub solution rather than hot feed. This would reduce the radiation damage by several orders of magnitude in this section. Even were it not intended to use the contactor as a compound contactor, advantage could be gained by introducing the feed one or two stages below the end and by using a small purge stream in the end section.

Were 14 stages used and if the contactor had 115 cc per stage, there would be 1.6 liters of holdup in this part of the contactor. If 20% of this volume were occupied by solvent, there would be only 1.3 liters of radioactive solution in the contactor. There would probably be more liquid holdup in the lines to and from the contactor than in the contactor. It is impressive that if any attention were paid to minimizing line volume, it would be possible to operate this contactor in a cell that contained less than 3 liters of hot radioactive solution.

9. ENTRAINMENT

The stacked-clone contactor inherently operates with the light phase dispersed. Characteristic of such devices, the light phase (organic phase)

breaks clean, with negligible entrainment of heavy phase. Also characteristic of such devices, difficulty arises in de-entraining the light phase from the heavy phase. To effect this, polishing stages are used below the stage where the organic solvent is introduced. Some work has been done to optimize these polishing stages. As previously noted, clone designs are available with both high-efficiency and low-throughput characteristics and with low-efficiency high-throughput characteristics. It has proved desirable to use high-capacity low-efficiency clones in the polishing stages. Mark XII clones have been developed specifically for this purpose. These are of the old Mark IV type, with no underflow chamber.

With no polishing stages, the entrainment would be about 3.5% of the organic solvent fed. Each polisher turns back about half of the entrainment that reaches it. The effect of increasing the number of polishing stages is shown in Fig. 12. There is obviously a point of diminishing returns—a point at which the increased complexity and increased volume of additional stages is not justified by the clarification effected. The bulk of the experimental work was done with three polishing stages, which permitted an entrainment of up to 1% of the organic solvent fed. Figure 13 shows a plot of entrainment versus percentage of flooding. The entrainment increases somewhat as the flooding point is approached. Entrainment is however more a characteristic of the polishers than of the extraction stages, while the flooding point is determined by the extraction stages. Therefore, the flooding point in the stacked-clone contactor is sharply defined, and entrainment up to that point is relatively flat. The entrainment rate seems to be a stronger function of the aqueous-phase rate than of the organic-phase rate.

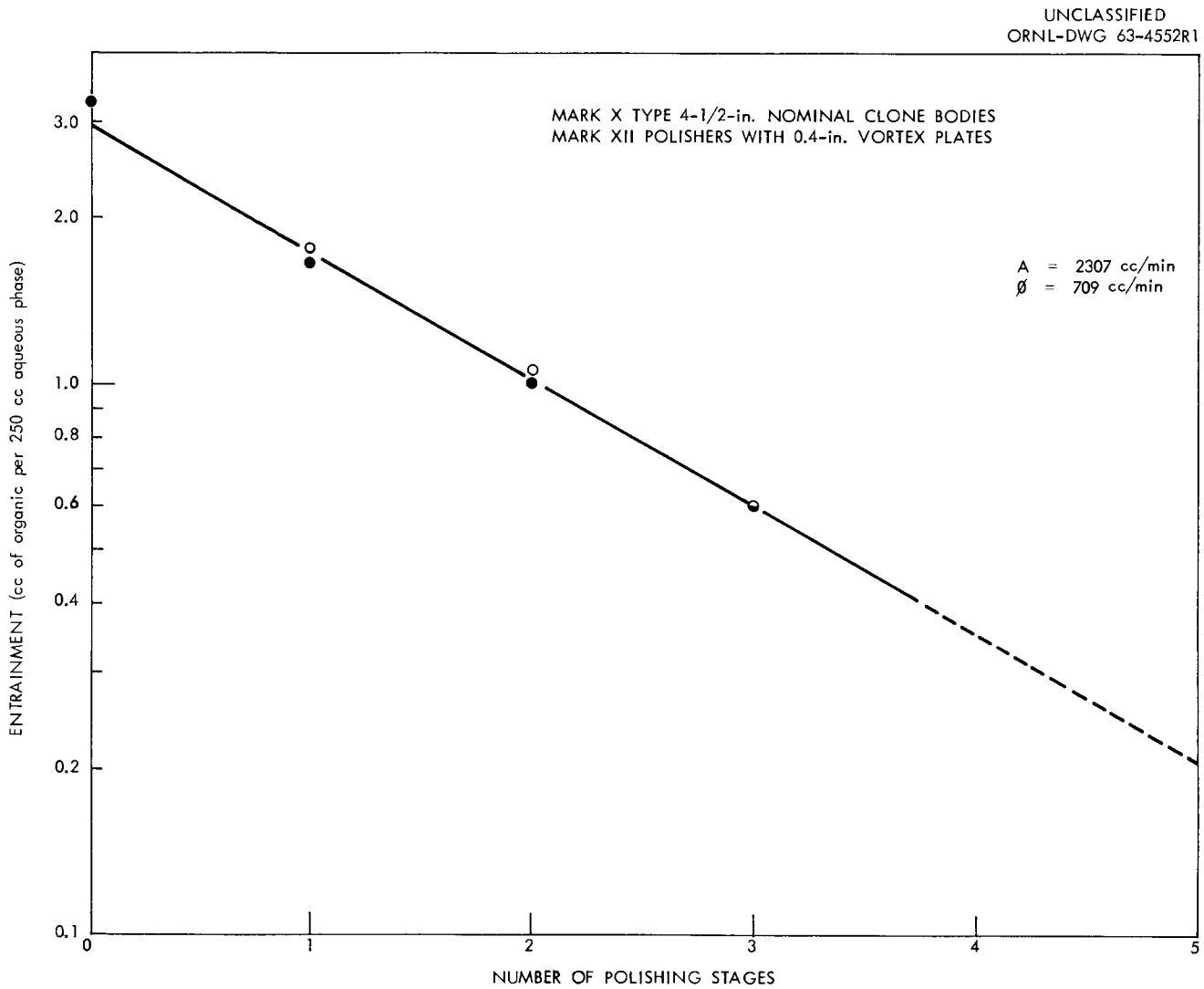

Fig. 12. Reduction of Entrainment by Polishing Stages.

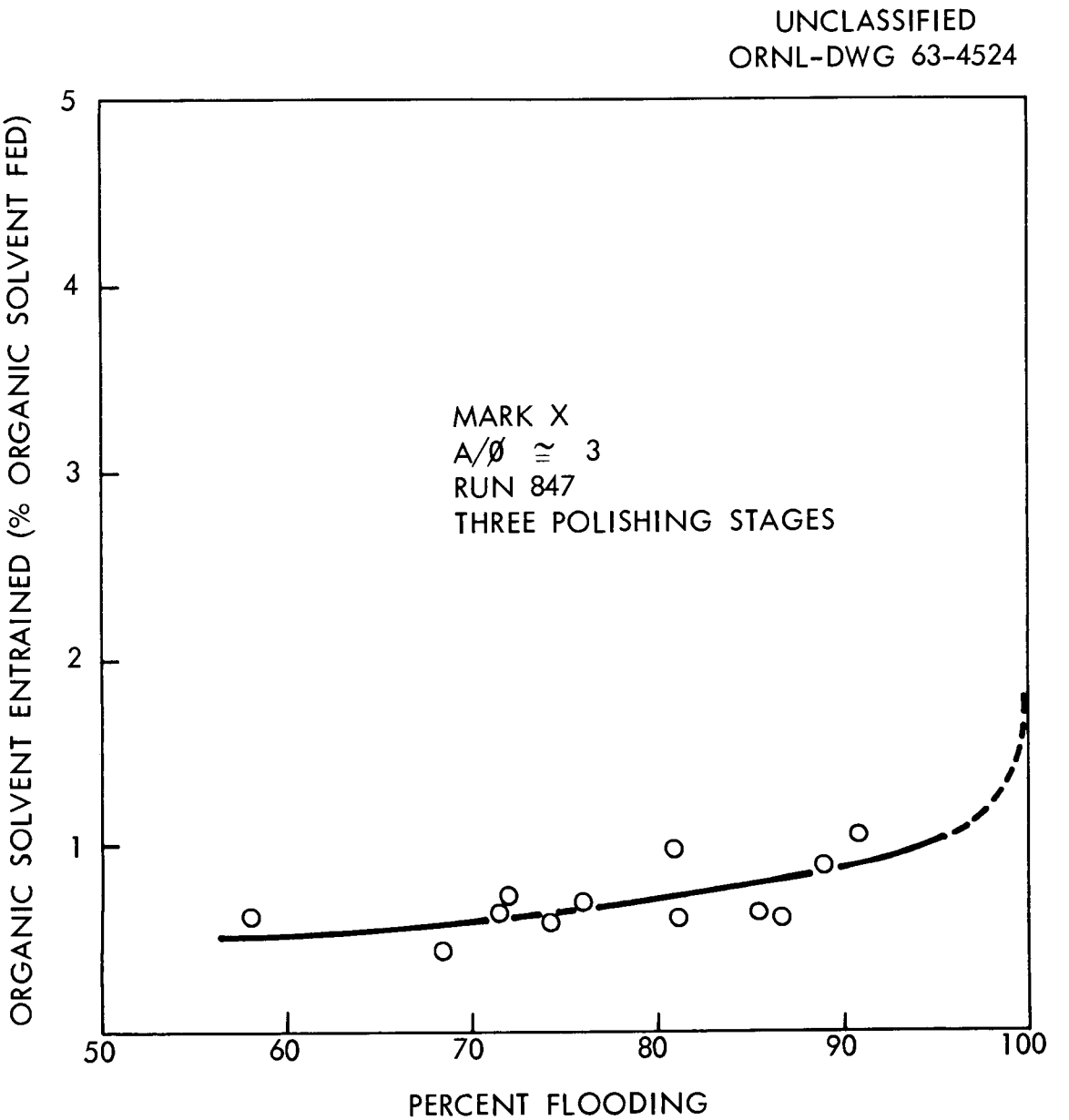

Fig. 13. Entrainment of Organic Solvent in Raffinate of Stacked-Clone Contactor.

The terminal chamber at the raffinate end of the cascade does have an effect on entrainment. The inverted cone previously described was effective. When the underflow port of the bottom clone discharged directly into the exit pipe, the entrainment was considerably higher. When the terminal cone was turned around so that the large end was adjacent to the bottom cone the entrainment increased by about 10%. When baffles were placed in the inverted cone, the entrainment increased by about 12%. When an inverted cone twice as long as the one used was tried, no improvement in entrainment was noted.

The significance of entrainment should be viewed in perspective when considering the processing of very highly radioactive feed. Because of solvent degradation, it will be necessary to purge solvent from the system at some programmed rate. An acceptable loss due to entrainment should be small compared with this purge rate.

A further item for comparison lies in losses expected in other parts of a reprocessing plant. For example, in the Eurochemic plant it is anticipated that about 0.3% of the solvent will be lost in the solvent recovery operation per cycle (Eurochemic First Activity Report 1959-1961, Organization for Economic Cooperation and Development, European Nuclear Energy Agency, p 285).

Devices have been tried to further reduce entrainment from the stacked-clone contactor. Among these was a device that redispersed the raffinate in an organic-solvent-continuous system. While this produced a clear raffinate, the additional volume and the additional complexity were thought unwarranted.

In summary, the entrainment losses for the stacked-clone contactor are probably well within the acceptable range for the intended type of operation.

10. CONTROL

It is necessary to control the rate at which the solvent is fed to the contactor, the rate at which the raffinate is withdrawn, and the interface level, and, if a scrub stream is used, its rate must be controlled. The solvent product is withdrawn over a weir. Significantly, there is no need to control any of the recirculating rates in the contactor proper. The induced underflow effect is inherent in the flow pattern of the clones, and the pumps are sized to drive the clones at full capacity. Altogether, the control of the stacked-clone contactor is at least as simple as the control of a pulsed column.

The control of the raffinate removal rate rather than the feed rate provides a direct control of the aqueous-phase flow rate through the contactor and allows the feed rate to be used to adjust the position of the interface directly and quickly. This control arrangement is also convenient because the raffinate is discharged at up to 60 psig, and the pressure at the feed point to the contactor is little more than atmospheric.

The location of the interface is best sensed by an indirect method. As the level of the interface rises, the efficiency of the settler to remove the solvent phase increases and less solvent is carried into the recirculating pump to the top stage. These pumps are operating in a regime where the head is essentially constant, and the pressure developed by the pump is directly proportional to the density of the fluid. As the solvent phase in the recirculating stream decreases, the pressure goes up. Accordingly, by monitoring the pressure developed by this top pump and sending it to a differential pressure transmitter with an appropriate zero suppression, a signal is generated which is related to the position of the

interface. The response of this signal is very rapid and highly reliable. The output of the differential pressure transmitter is sent to a controller that activates a control valve, which cuts back the feed rate when the interface is high.

The response to a step change is shown in Fig. 14. In this incident, the contactor had been operating at steady state, but an operator noticed that the feed control valve was running nearly closed. The feed to the system came from a head tank about 40 ft above the equipment, with a booster pump installed in the line for use if needed. At the time, the pump was running. The operator confidently turned the pump off (cutting the pressure to the feed valve in half) and left to attend to other business. The drop in the interface was barely perceptible, the feed valve opened immediately, and within six minutes the system was again "lined out."

The principle of measuring organic solvent content of the recirculating stream by monitoring pump pressure has also been used in an attempt to measure solvent holdup in the cascade, but its quantitative calibration has not yet been worked out. It has, however, proved very useful for detecting flooding. When the contactor floods the solvent phase, holdup suddenly increases to over twice its normal value. Such a monitor on the bottom extraction clone will indicate flooding in less than a minute. It normally takes from 5 to 15 min for the entrainment rate to increase to the point that flooding can be detected by this alternative method.

While the pump-monitoring technique is excellent for control of the interface, it has been used in conjunction with visual observation of the interface position for adjusting the setpoint of the controller. It will be necessary in plant application to use some other method of positively

UNCLASSIFIED
ORNL-DWG 63-4640

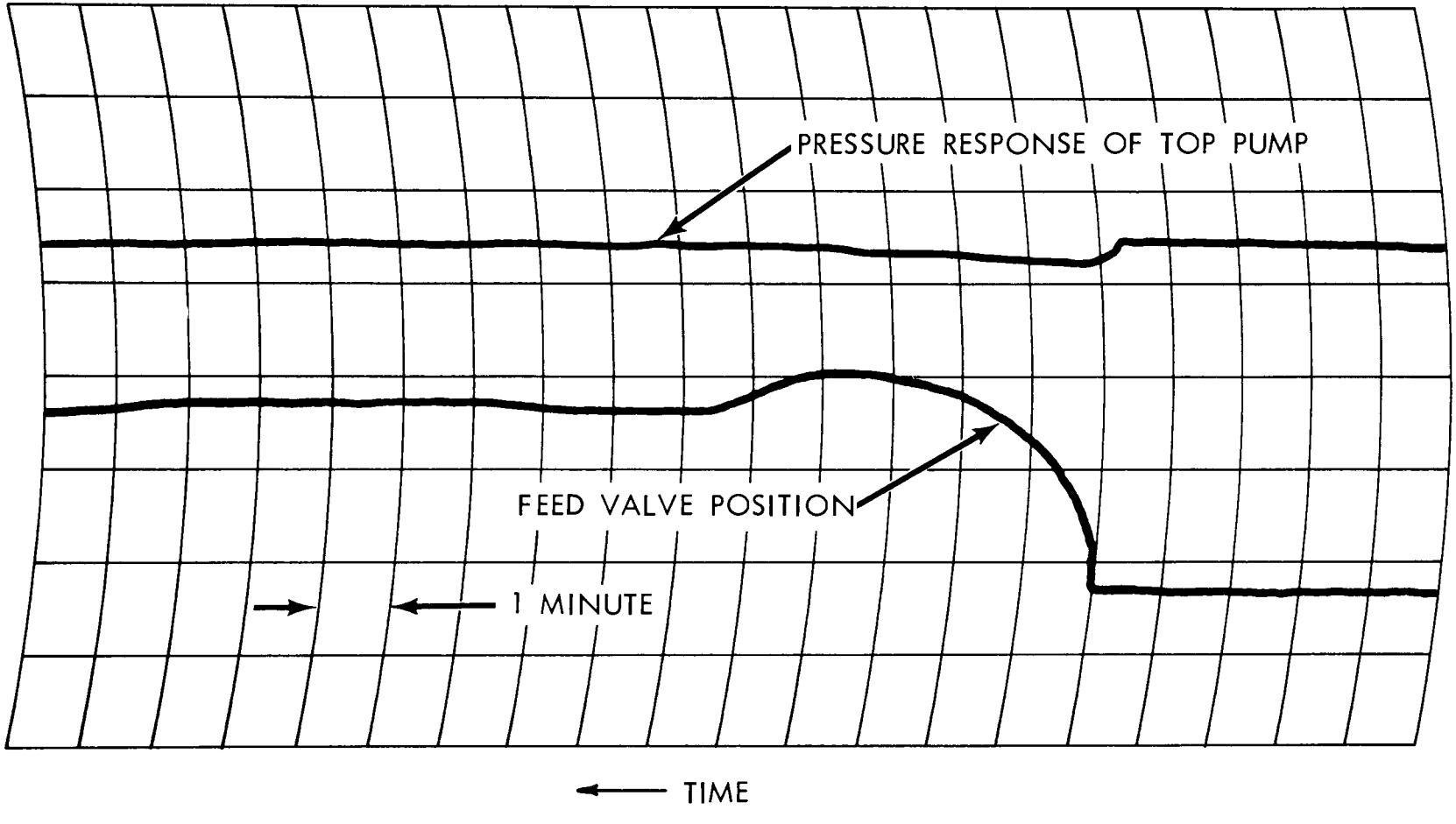

Fig. 14. Response of Interface Control to a Step Change.

locating the interface. This could be a bubbler probe, or a density cell, or any one of several proved devices, but it need serve only as a general positive index to the interface location and need not have the sensitivity nor response required for control.

11. DESIGN PROBLEMS IN THE STACKED-CLONE CONTACTOR FOR RADIOCHEMICAL PLANT USE

In applying the principles of the stacked-clone contactor to a unit that would serve in a radiochemical plant there are several considerations and unresolved problems. The most significant of these is the incorporation of the pumps into the device. Unless the clone cavity and the pump of each stage are built in the same piece, line volume will be undesirably large. Ideally the contactor would be modular, with each unit machined or cast in a single block containing the pump cavity and the clone cavity, with an insert for the vortex finder. These could be held together by longitudinal tie rods and seal welded. It would be highly desirable to drive all pump impellers from a single shaft driven by a canned motor at the top end. The scrub solution could enter through the motor. The seal between pumps should be rugged and reliable, but need not be completely leak tight. Since there is a backmixing inherent in the contactor which amounts to perhaps 300 cc/min, leakage as high as 30 cc/min would likely have no detectable effect on performance. This reasonable leakage rate should not be difficult to achieve since the pressure difference between stages will be kept below about 3 psi. The mechanical design of a unit consistent with these considerations is being pursued and is shown in conceptual form in Fig. 15. Fourteen stages would make a unit about

UNCLASSIFIED
ORNL-DWG 63-4403

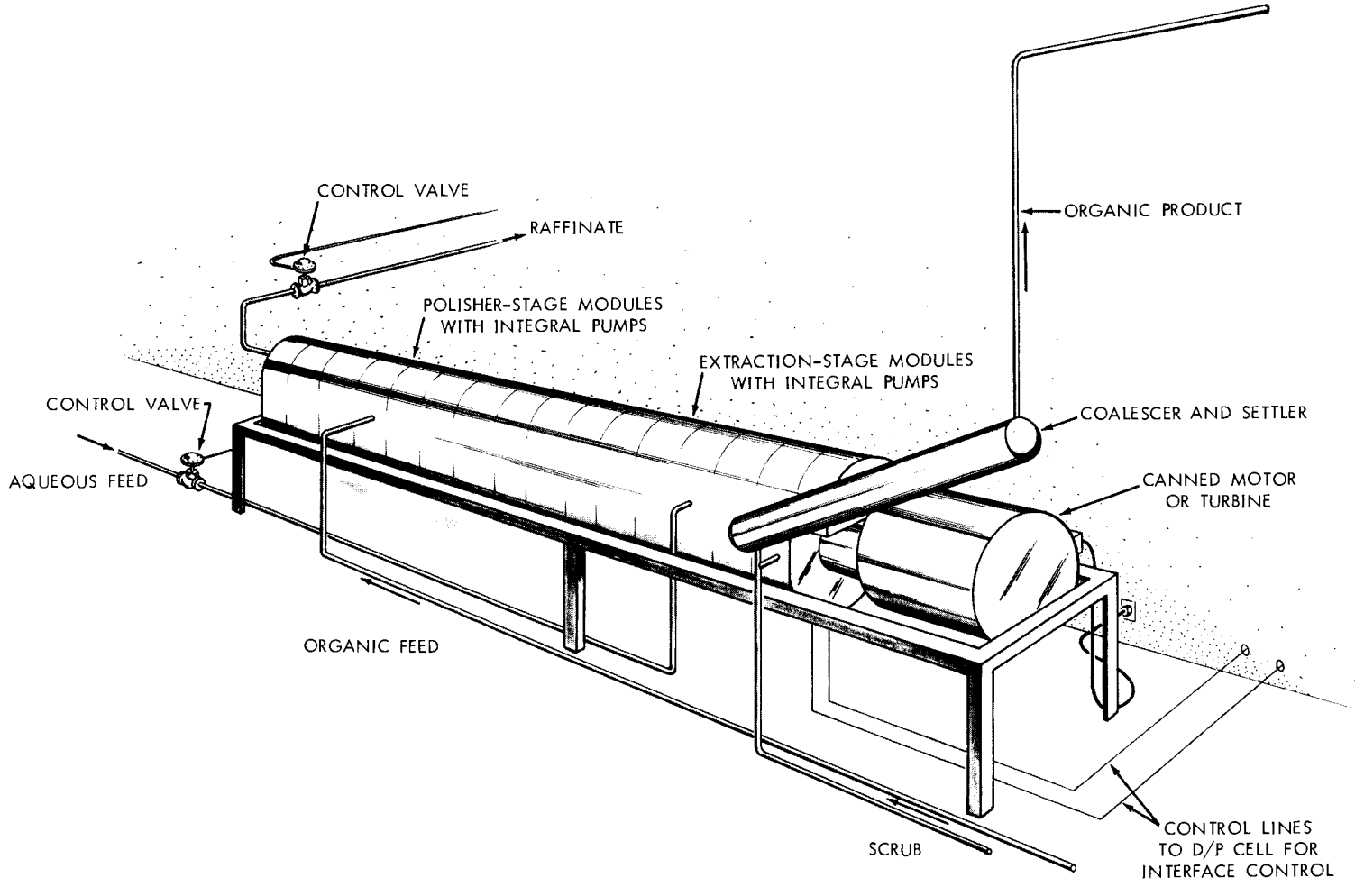

Fig. 15. Artist's Conception of Enclosed Stacked-Clone Contactor for Radiochemical Processing.

8.5 ft long, over all. The body of the contactor would be 4 in. wide and 8 in. high.

An alternative approach is to drive each stage with a separate motor. This greatly simplifies the design problem but introduces either the problem of a tight shaft seal at each stage or the intolerable additional volume of canned rotor pumps. It also entails a problem in maintaining a large number of motors. If any stage fails, the cascade is inoperable.

Scale-up is a problem that has received limited attention. The stacked-clone contactor could be scaled by two methods: the dimensions of the clone could be scaled, or a number of clones could be manifolded and run in parallel.

There are no good data on the effect of dimensions on performance. It is known from earlier work with hydroclones that the capacity of a unit goes up as the square of the dimension. Unfortunately, the volume goes up as the cube. There is, then, little incentive to explore larger clone diameters if the manifolding of clones will work. While a stacked-clone contactor has never been run with more than one clone per stage, hydroclones are commercially available in manifolded arrays, and they work without difficulty. There is no apparent reason why this could not be done with the stacked-clone contactor. It is, incidentally, the intuitive feeling of the developers that performance would fall off as diameter increased.

Similarly, there is little incentive to investigate clones of very small diameter since some reasonable working dimensions are necessary for pumps, and ports and clearances less than 1/16 in. are prone to plug. A further indication that the present dimensions are in the general range of the optimum is that the clone-cavity volume is of the same order as the

pump and the connecting lines and ducts. With the unit under study, about 20% of the recirculating stream is realized in throughput, and efficiencies are probably limited by the inherent backmixing. In short, it seems unlikely that gross improvements could be effected by any means.

The experimental stacked-clone contactor has an anticipated capacity, using the Purex flowsheet, of about 0.3 ton/day of uranium. A ten ton/day unit would use 33 clones in a manifolded unit which would be about 10-in. in diameter. It would be driven by a single pump per stage, and a stage would still be about 5 in. long.

12. CONSIDERATIONS IN APPLICATION

The stacked-clone contactor is unique, both in its principle of operation and in its performance. It has capabilities probably not shared by any other contactor, and it has limitations not commonly considered. In order to adequately exploit its advantages, it is necessary to recognize and provide for its limitations.

Principal among its advantages are its very low volume holdup and its rapid response time. A first consideration in applying the device should be the design of a system which does not have auxiliary equipment that necessitates large holdup volumes in the same cell. Any tanks, settlers, etc., containing highly radioactive solutions necessary for the operation should be located in another area, which is shielded from the solvent. Even the line that conducts the feed solution to the contactor and the line that carries away the raffinate will have volumes of the same order as the contactor and should be kept to a minimum size and length.

Experience with the experimental stacked-clone contactor has shown it to be a device amenable to the very rapid accumulation of data. Its stability, simplicity, and rapid response are all conducive to this end. Over the last two years over 1000 runs have been logged on this unit. This compares with the about 1800 data points on flooding in pulsed columns that have been contributed by all work to date, as determined by a separate study.[1] Normally 12 runs can be made in a typical 8-hr shift by two operators, who also take all samples and record all data. When the contactor is operating, only 10 min are required to reach steady state after a change of rates. The most difficult problems associated with an experimental run are maintaining the correct temperature of operation and measuring and holding the proper feed rates.

The rapid response time and the short time required to put the unit on stream make the stacked-clone contactor ideal for use in a plant whose load consists of many short campaigns, processing different types of fuels. Starting with a dry contactor, an experienced operator should be able to bring the unit to steady state easily in half an hour. Shutdown is as simple. Were the other components in the plant consistently designed, the turn-around time between campaigns could be substantially decreased, and the economics of operation could be significantly altered.

Among the limitations of the device are its sensitivity to the physical properties of the solvent extraction system and its working range of phase ratios. Its sensitivity to physical properties has been observed primarily in the effect that temperature of operation has when using the standard system for design parameter studies, and in its difference in performance with two other solvents tried. These data are not sufficient to make

precise inference, but it is apparent that the sensitivity exists. While this means that emulsion-forming systems and very viscous systems are ruled out, it also implies that there may be systems that would perform much better than the systems already used. These were chosen for their ease of analysis and consistent chemical behavior without consideration of compatibility with operation in a stacked-clone contactor. Indeed, a valid basis for such selection is yet to be determined.

The contactor will work over a wide range of flow rate ratios, but its capacity is markedly higher at higher values of A/Φ. This implies that the Purex flowsheet can be used but that there would be an advantage to using solvents with higher distribution coefficients. There is also the possibility of using a more dilute feed solution with the stronger solvents. With a fixed volume of feed in the contactor, dilution would reduce the radiation level, and hence, the solvent damage. This would, of course, result in a larger volume of waste to be evaporated, and could only be justified by weighing the cost of additional evaporator capacity against the reduction in solvent degradation.

The short contact times possible with the stacked-clone contactor further admit the possibility of exploiting kinetic effects in some separation problems. When the rate of extraction is different for two different species, the faster could be selectively removed. In a chemical system where extractable complexes of a contaminant form slowly at the salting strengths necessary for extraction of the desired component, feed adjustment could be made immediately before the contactor, or, indeed, in the contactor itself, and extraction effected before the undesirable complexes form.

13. CONCLUSIONS

The stacked-clone contactor development program, while not complete, has progressed to the point where it is established that its unique basic principles of operation are valid, and experimental models have been built and run. These experimental models have achieved residence times of the order of 4.5 sec per theoretical stage, and by obvious design improvements to eliminate nonfunctional volume, contact times in the range of 2.5 sec are feasible. These times are about a tenth those obtainable in a pulsed column. In addition to short contact times, the total volume of solutions held in the contactor is only a few per cent of the holdup of conventional contactors. Indeed, the holdup in the piping to and from the contactor will constitute a significant fraction of the total "hot" solution volume in the cell containing the contactor. A corollary to its low volume is its small size and rapid response. The short time required for it to reach steady state (about 20 min for ten stages) makes it attractive for short-campaign intermittent loads. The only internal condition which must be controlled for normal operation is an interface at the product end of the contactor, for which a simple method has been developed. Startup, shutdown, and normal operation are at least as simple as that for any other available contactor.

It will find its most significant application in the processing of very highly radioactive fuels where solvent degradation by radiolysis is important.

The performance characteristics of the stacked-clone contactor have been studied over a reasonable range with the system: 1 M $NaNO_3$ - 18% TBP in Amsco, extracting uranyl nitrate. The experimental unit will develop

between 65 and 80% stage efficiency. There is little effect of throughput on stage efficiency between 50 and 100% of flooding. Flooding in the contactor is clearly demarked. Entrainment of aqueous phase in the solvent product is negligible, and entrainment of the solvent phase in the aqueous raffinate runs about 1% with three polishing stages, but may be reduced to any desired level by the addition of more polishing stages. One percent is not thought to be excessive entrainment when solvent degradation is significant. Since the contactor is sensitive to temperature of operation, it is anticipated that it will be limited in application to systems with "good" physical properties as usually understood in solvent extraction. The contactor has a higher capacity at higher flow rate ratios (A/Φ) to at least $A/\Phi = 7$.

Further work is necessary to determine the limits of the range of operating conditions and to determine the performance of the device on a variety of different solvent systems.

Design is underway on a stainless-steel prototype that will incorporate the pumps into the same physical unit as the hydroclone cavities. It will be necessary to test such a unit to demonstrate its reliability and to solve the multitude of mechanical problems associated with the development of an operating piece of equipment for plant use.

The stacked-clone contactor is different from conventional contactors both in its principle of operation and in its performance. It holds possibilities for the exploration of new areas in solvent extraction, but with boundary conditions that are different from those imposed when contemplating the use of pulsed columns or mixer-settlers. To most effectively exploit the device, it will be necessary to consider the unique characteristics

and to allow these to influence the development of flowsheets.

14. REFERENCES

1. R. A. McAllister and A. D. Ryon, A Review of Pulse-Column Flooding Data and Correlations with Proposed Methods for Correlation, ORNL-TM-634 (June 6, 1963).

15. BIBLIOGRAPHY

1. M. E. Whatley and W. M. Woods, Jr., U. S. Patent No. 3,052,361, assigned to AEC, U. S. Government, filed December 6, 1960, issued September 4, 1962.
2. F. L. Culler, Jr., et al., Chemical Technology Division Annual Progress Report for Period Ending May 31, 1963, ORNL-3452, p 221-25.
3. F. L. Culler, Jr., et al., Chemical Technology Division Annual Progress Report for Period Ending August 31, 1960, ORNL-2993, p 194-96.
4. F. L. Culler, Jr., et al., Chemical Technology Division Annual Progress Report for Period Ending June 30, 1962, ORNL-3314, p 205.
5. F. L. Culler, Jr., et al., Chemical Technology Division Annual Progress Report for Period Ending May 31, 1961, ORNL-3153, p 125.
6. W. E. Dunn, Stacked Clone Contactor Development, ORNL-CF-60-5-60 (May 16, 1960).
7. R. Simms, High Speed Contactor, ORNL-CF-59-10-136 (Oct. 8, 1959).
8. J. C. Bresee, et al., Unit Operations Section Monthly Progress Report, July 1959, Chemical Technology Division, ORNL-CF-59-7-58, p 12-16.
9. J. C. Bresee, et al., Unit Operations Section Monthly Progress Report, September 1959, Chemical Technology Division, ORNL-CF-59-9-69, p 10-15.
10. J. C. Bresee, et al., Unit Operations Section Monthly Progress Report, October 1959, Chemical Technology Division, ORNL-CF-59-10-77, p 28-31.
11. J. C. Bresee, et al., Unit Operations Section Monthly Progress Report, December 1959, Chemical Technology Division, ORNL-CF-59-12-49, p 16-19.
12. M. E. Whatley, et al., Unit Operations Section Monthly Progress Report, March 1962, Chemical Technology Division, ORNL-TM-222, p 7-25.

13. M. E. Whatley, et al., Unit Operations Section Monthly Progress Report, August 1962, Chemical Technology Division, ORNL-TM-355, p 12-38.

14. M. E. Whatley, et al., Unit Operations Section Monthly Progress Report, May 1963, Chemical Technology Division, ORNL-TM-613, p 6-13.

ORNL-3533
UC-4 — Chemistry
TID-4500 (27th ed.)

INTERNAL DISTRIBUTION

1. Biology Library
2-4. Central Research Library
5. Reactor Division Library
6-7. ORNL — Y-12 Technical Library
Document Reference Section
8-42. Laboratory Records Department
43. Laboratory Records, ORNL R.C.
44. P. S. Baker
45. G. E. Boyd
46. J. C. Bresee
47. R. E. Brooksbank
48. W. D. Burch
49. W. H. Carr
50. F. L. Culler
51. L. G. Farrar
52. D. E. Ferguson
53. H. E. Goeller
54. M. Ichikawa
55. C. E. Lamb
56. J. A. Lane
57. C. E. Larson
58. J. T. Long
59. E. C. Miller
60. F. L. Peishel
61. A. D. Ryon
62. M. J. Skinner
63. W. J. Stelzman
64. J. C. Suddath
65. J. A. Swartout
66. B. S. Weaver
67. A. M. Weinberg
68-92. M. E. Whatley
93. W. R. Whitson
94-118. W. M. Woods
119. P. H. Emmett (consultant)
120. J. J. Katz (consultant)
121. T. H. Pigford (consultant)
122. C. E. Winters (consultant)

EXTERNAL DISTRIBUTION

123. Research and Development Division, AEC, ORO
124-709. Given distribution as shown in TID-4500 (27th ed.) under Chemistry category (75 copies — OTS)