LOCKHEED MARTIN ENERGY RESEARCH LIBRARIES
3 4456 0451477 3

CENTRAL RESEARCH LIBRARY
DOCUMENT COLLECTION

ORNL-3699
UC-37 – Instruments
TID-4500 (32nd ed.)

A MINIATURIZED FISSION CHAMBER AND PREAMPLIFIER ASSEMBLY (Q-2617) FOR HIGH-FLUX REACTORS

D. P. Roux
E. Fairstein
S. H. Hanauer
G. C. Guerrant
J. L. Kaufman

CENTRAL RESEARCH LIBRARY
DOCUMENT COLLECTION
LIBRARY LOAN COPY
DO NOT TRANSFER TO ANOTHER PERSON
If you wish someone else to see this document, send in name with document and the library will arrange a loan.

OAK RIDGE NATIONAL LABORATORY
operated by
UNION CARBIDE CORPORATION
for the
U.S. ATOMIC ENERGY COMMISSION

ORNL-3699

Contract No. W-7405-eng-26

INSTRUMENTATION AND CONTROLS DIVISION

A MINIATURIZED FISSION CHAMBER AND PREAMPLIFIER ASSEMBLY (Q-2617) FOR HIGH-FLUX REACTORS

D. P. Roux
E. Fairstein G. C. Guerrant
S. H. Hanauer J. L. Kaufman

OCTOBER 1964

OAK RIDGE NATIONAL LABORATORY
Oak Ridge, Tennessee
operated by
UNION CARBIDE CORPORATION
for the
U.S. ATOMIC ENERGY COMMISSION

LOCKHEED MARTIN ENERGY RESEARCH LIBRARIES
3 4456 0451477 3

CONTENTS

		Page
1.	Abstract	1
2.	Introduction	1
3.	Fission Chamber	2
4.	Preamplifier	2
	4.1 Preamplifier Circuit	2
	4.2 Component Selection	5
	4.3 Provisions for Operation at 100°C Ambient	6
	4.4 Separation Distance of Preamplifier to Chamber	7
5.	Flexible Cables	7
	5.1 Cable Between Fission Chamber and Preamplifier	7
	5.2 Cable Between Preamplifier and Main Amplifier	7
6.	Electrical Shielding Layout	8
7.	Operational Performance of the Assembly	8
	7.1 Life Performance	8
	7.2 Low Pickup-Noise Performance	10
8.	Appendix	11
	8.1 List of Drawings and Assembly and Test Procedures	11
	8.2 Preamplifier Power Supply and Pulse Transformer Network	11
	8.3 Modification to Reactor Control A-1D Amplifier Q-1875	12

A MINIATURIZED FISSION CHAMBER AND PREAMPLIFIER ASSEMBLY (Q-2617) FOR HIGH-FLUX REACTORS

D. P. Roux
E. Fairstein[1] G. C. Guerrant
S. H. Hanauer J. L. Kaufman[2]

1. ABSTRACT

An articulated assembly consisting of a fission chamber, a preamplifier, and flexible cables has been developed to meet the space and environmental requirements of high flux reactors. This assembly, which has an in-service life greater than 1 year and low noise-pickup performance, is particularly suited as part of a reactor counting channel.

The entire assembly is waterproof and can operate continuously at a temperature of 100°C. Its maximum outside diameter is 3/4 in. and its maximum rigid length is 1 ft.

2. INTRODUCTION

To meet the space and environmental requirements for high-performance reactors, an articulated assembly (Fig. 1) consisting of a fission chamber, a preamplifier, and flexible cables has been developed. Because high-flux reactor cores are usually inaccessible, it becomes necessary to use a detector that is small and movable in a tube which can be bent to resolve the access problems at each reactor. The relatively low sensitivity of a small chamber is compatible with the large neutron source-level encountered in such reactors. Locating the preamplifier close to the fission chamber drastically reduces the susceptibility of the counting channel to electrical noise pick up so that the system responds predominantly to neutrons; consequently, the reactor operator is assured of an adequate source. The assembly is particularly suited as part of a wide-range counting channel[3], but also can be used as part of a conventional counting channel.

---

[1] Formerly a consultant to the Instrumentation and Controls Division; now with Tennelec Instrument Co., Oak Ridge, Tenn.

[2] Present address Babcock & Wilcox Co., Lynchburg, Virginia.

[3] R. E. Wintenberg and J. L. Anderson, Trans. Am. Nucl. Soc. 3, 454-455 (1960).

The entire assembly is waterproof and can operate continuously at a temperature of 100°C ambient. The maximum outside diameter of the assembly is 3/4 in., and its maximum rigid length is 1 ft. The fission chamber and the cable connecting it to the preamplifier can withstand a total integrated gamma radiation dose of 10^{10} rad; the preamplifier can withstand at least 10^8 rad. The distance between the fission chamber and the preamplifier is 4-1/2 ft.

3. FISSION CHAMBER

The fission chamber (Q-2217) consists of two cylindrical concentric nickel electrodes enclosed by a stainless steel envelope 3/4 in. diam. The cathode of the fission chamber is 1/2 in. ID; the anode is 1/4 in. OD. A 3-in. length of the cathode is coated with 1 mg/cm^2 of ^{235}U. The thermal neutron sensitivity is 0.025 count per neutron/cm^2. The chamber is filled with a mixture of Ar and 3% CO_2 at 25 psia.

The fission chamber design is a compromise among sufficient neutron sensitivity, low gamma pile-up, and flat plateau characteristic. During reactor re-start, the neutron-to-gamma flux ratio is a minimum, and one must consider gamma pulse pile-up under these conditions. For Be or D_2O moderated reactors, the photoneutron flux is generally high, so that the neutron-to-gamma flux ratio is high and gamma pile-up is not a serious problem. For reactors moderated or shielded with ordinary water, the natural abundance of D_2O is responsible for a photoneutron flux of approximately 0.2 nv per r/hr. At a neutron counting rate of 10^4 photoneutron-counts per sec, the associated gamma flux is therefore 2×10^6 r/hr. For operation in such high gamma fluxes, the gamma-ray pulse pile-up is minimized by using double RC clipping (see Sect. 4.1) with time constants of 150 nsec and by utilizing a chamber gas at low pressure with a high electron-drift velocity. Figure 2 shows the response of the assembly to thermal neutrons and gamma rays and illustrates that discrimination against gamma pile-up pulses in a flux of 1.8×10^6 r/hr was readily achieved.

4. PREAMPLIFIER

4.1 Preamplifier Circuit

The preamplifier circuit (Fig. 3) consists of two cascaded feedback amplifiers: a charge-sensitive input configuration (V_1 and V_{2A}) followed by a voltage-sensitive amplifier (V_{2B}, V_3, and V_4) with symmetric output. The signal pulses are differentiated both at the input and at the output of the preamplifier, giving the pulse shape shown in Fig. 4. The gain of the preamplifier is 0.75×10^{12} v/coulomb. This corresponds to a system output pulse height of 150 mv for a nominal 50-Mev fission fragment. The counting loss for randomly spaced pulses is 10% at a counting rate of 10^5 counts/sec.

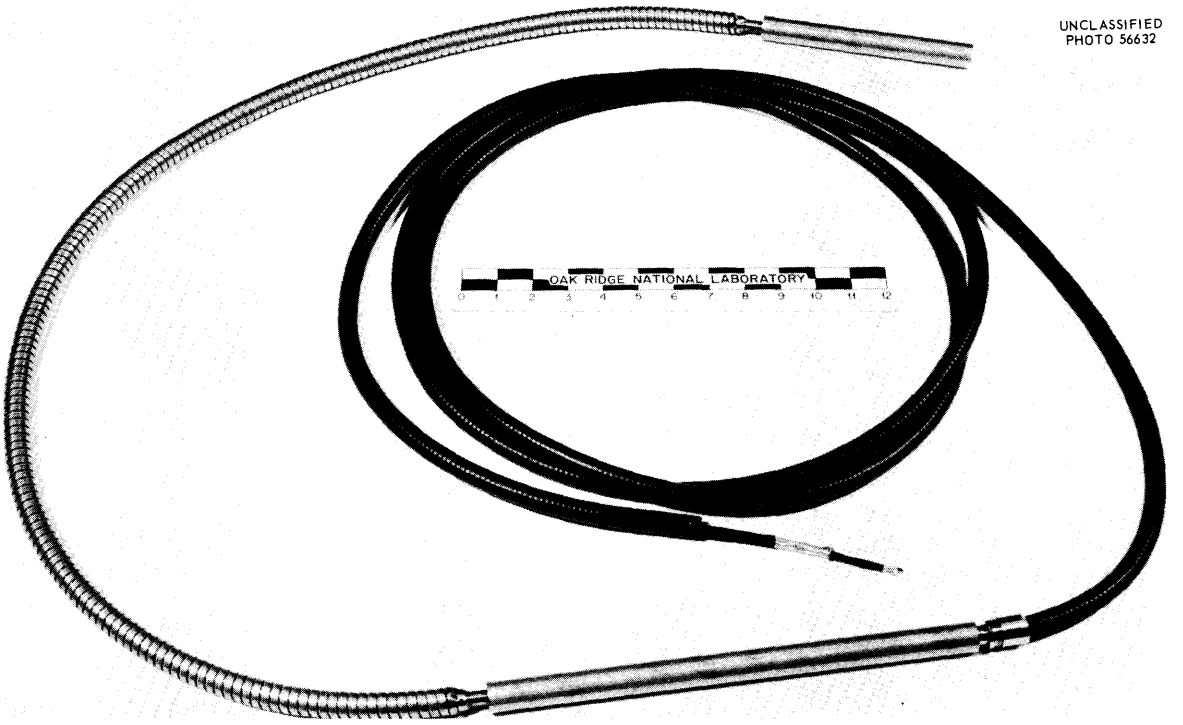

Fig. 1. Flexible, Radiation-Resistant Assembly of Fission Chamber, Preamplifier, and Interconnecting Cables.

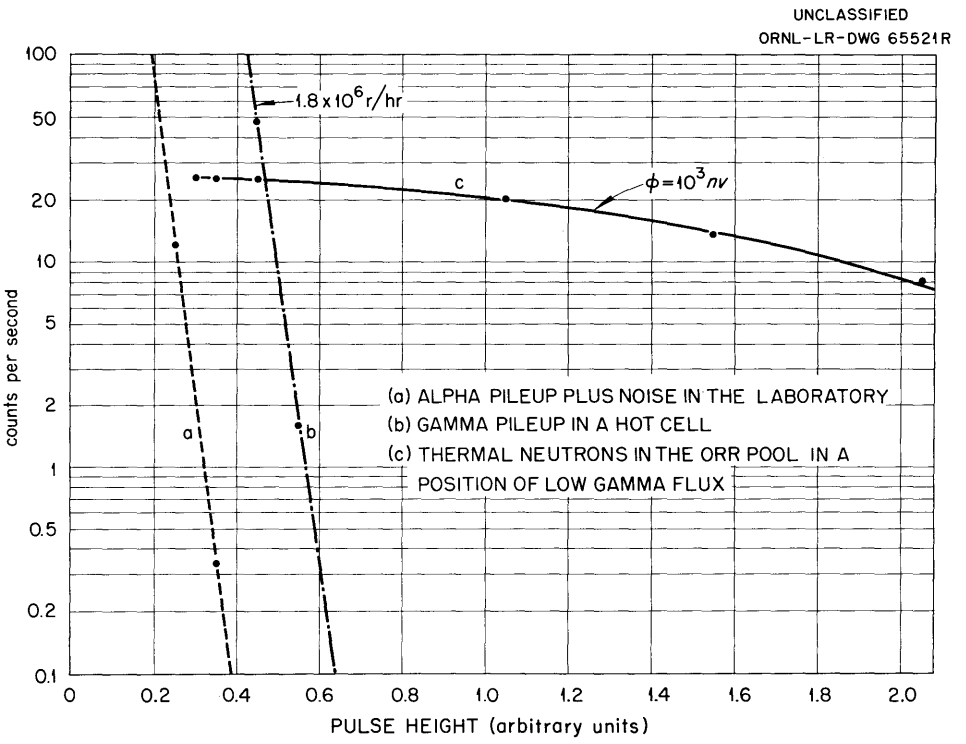

Fig. 2. Performance of the Fission Chamber and Preamplifier Assembly.

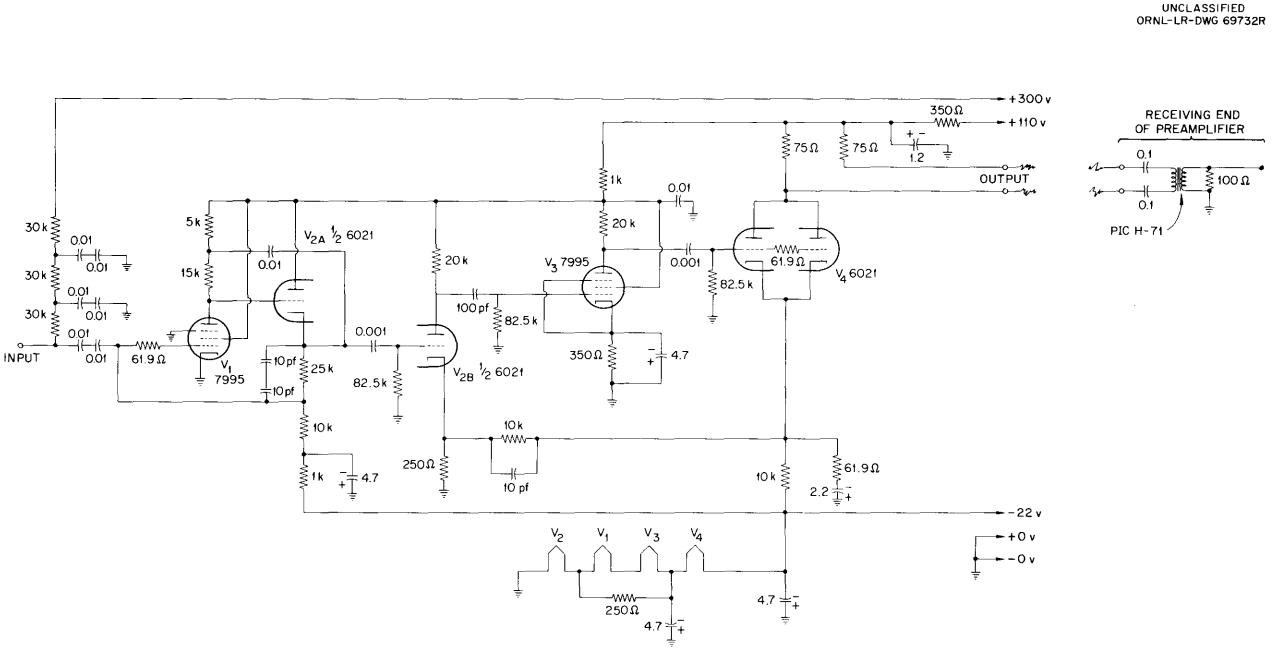

Fig. 3. Preamplifier Circuit Diagram.

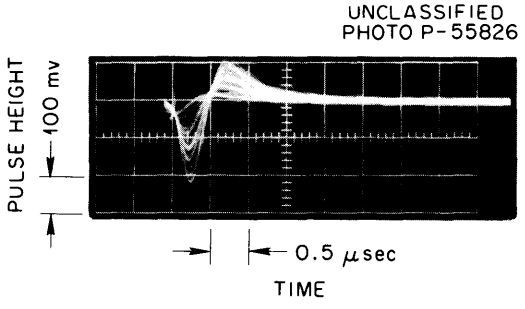

Fig. 4. Photograph of Fission Pulses at the Main Amplifier Input.

The advantages of a charge-sensitive configuration are that, over a wide range of detector capacitance, (1) the output signal height depends only on the charge generated within the detector and is insensitive to the capacitance of the detector and connecting cable (variation of input capacitance from 0 to 200 pf produces a gain change of only 10%); and (2) the decay time of the detector pulse is also insensitive to the capacitance of the detector and cable (variation of input capacitance from 0 to 200 pf produces a decay time change of only 10%).

The preamplifier output is connected to a balanced and shielded cable which is terminated at its receiving end by a pulse transformer. The common-mode electrical fluctuation signals picked up by the two signal leads are cancelled in the pulse transformer. In one application at a reactor, the common mode rejection was greater than 95%.

The double differentiation reduces the effects of pulse pile-up. With the first differentiator at the input to the preamplifier, the maximum counting rate is limited by coincidence loss rather than by bias shifts. The pulse transformer serves as the second differentiator. The second differentiation time constant is determined by the ratio of the primary inductance of the transformer to its terminating resistance. The combined effect of both differentiators eliminates any duty-cycle shift in the main-amplifier discriminator threshold. Figure 4 is a photograph of the fission pulses at the main amplifier input. The integrals of the individual pulse areas on either side of the reference are equal.

4.2 Component Selection

The operating temperature, the radiation requirements, and the permissible overall diameter of the assembly demanded prudent selection of the components used in the preamplifier.

4.2.1 Tubes

Temperature and radiation conditions precluded the use of transistors; consequently, flying-lead subminiature tubes were selected. Nuvistors were considered but were rejected, because their diameter is so large that to mount components side by side with the tubes in the allotted space would be impossible.

4.2.2 Resistors

Resistors were limited to those of wire-wound and deposited-carbon types. The wire-wound resistors (miniature power ratings) were used in all critical circuit locations sensitive to the value of a resistor; deposited-carbon resistors were used in noncritical circuits.

4.2.3 Capacitors

Capacitors were limited to those of porcelain and solid tantalum electrolytic dielectrics. The particular ceramic capacitors used (Vitramon type VK20) have maximal operating conditions of 150°C and 200 v. A 10^8 rad gamma dose results in a capacitance variation of less than 1%. The tantalum capacitors (Texas Instrument type SCM) are used only for bypassing in circuits which can tolerate high leakage currents and considerable capacitance variations. The operating temperature of the tantalum capacitors is limited to 125°C. As a result, they are located in the preamplifier layout where negligible heat power is dissipated (see Sect. 4.3). Irradiation tests made at ORNL on four type-SCM tantalum capacitors to an accumulated dose of 10^8 rad showed an increase of less than 5% for the dissipation factor.

4.3 Provisions for Operation at 100°C Ambient

For continuous operation of the preamplifier in air or water at 100°C ambient, the following provisions were made:

a. The preamplifier was potted in a mixture of 70 wt % epoxy Helix P-430 and 30 wt % epoxy Dow Chemical DER 732 to which was added 6% of Helix hardener B. This particular potting compound improves the heat transfer and increases the mechanical rigidity of the preamplifier. The advantages of using this compound are that it is only slightly brittle at room temperature, it shrinks minimally during curing (the shrinkage of some epoxies during curing has caused tube and tantalum capacitor breakdowns), and its thermal expansion coefficient is compatible with that of the preamplifier components.

b. The tube filaments are heated with a voltage of only 5.5 v (6.3 v rating) to minimize the heat power generation.

c. The tantalum capacitors (125°C max) are located at the ends of the preamplifier, whereas the subminiature tubes are positioned in the center of the preamplifier. The ceramic capacitors (150°C max) are also located at the ends except for a group which is placed in a gap between the first and the second tubes as shown in Fig. 5.

Two different tests were performed to establish that the capacitors operate below the manufacturers' specified maximum temperatures when the preamplifier is in a region whose ambient temperature is 100°C. In the first test the preamplifier was placed in still air at 100°C in an oven. In the second test the preamplifier was immersed in water at 98°C. In both tests, five thermocouples were located inside the preamplifier close to the components of interest, and the time profiles of the temperatures were recorded. The results indicated that the equilibrium temperatures of all capacitors were at least 6°C below the manufacturers' maximum specified temperatures in the first test and 14°C in the second test. The first test lasted 10 days; during this time no change in the preamplifier gain or output pulse shape was observed.

4.4 Separation Distance of Preamplifier to Chamber

The separation distance between the preamplifier and the fission chamber should be short to satisfy the electrical noise pick-up consideration, but must be long enough to limit the radiation damage to the preamplifier. (The preamplifier was designed to withstand an accumulated dose of 10^8 rad over one year of continuous operation.) The evaluation of the effects of the accumulated dose should be separated into two parts: the dose accumulated during operation of the reactor at power, and the dose accumulated during reactor shutdown. In light-water shielded reactors, the dose accumulated during reactor shutdown is considerably alleviated if the neutron counting rate is restricted to 10^4 counts/sec or less: the reason is that photoneutrons generated in the water by the residual fission-product gamma rays will give a neutron counting rate that makes unnecessary the insertion of the fission chamber and preamplifier assembly into a higher gamma flux (see Sect. 3). For application in light-water moderated reactors, a separation length of 4-1/2 ft between the fission chamber and the preamplifier is adequate. This distance is also sufficient to maintain the preamplifier in a gamma flux less than 10^4 r/hr (or 10^8 r/yr) when the reactor is at full power.

5. FLEXIBLE CABLES

5.1 Cable Between Fission Chamber and Preamplifier

The cable between the fission chamber and the preamplifier is a BIW 50-ohm coaxial cable enclosed in an external inorganic insulation sheath (spaghetti). The sheathed cable is inserted into a 1/4-in. ID corrugated flexible metal tubing fitted with stainless steel braid and casing. The BIW cable is a flexible, high temperature (500°C max), and radiation resistant coaxial cable. It consists of a 24-gage stranded nickel-clad copper center conductor, an inorganic insulation, and a nickel-clad copper outer braid 0.200 in. OD. Its capacitance is 35 pf/ft. The corrugated tubing provides watertightness and flexibility with negligible elongation. The measured linear-expansion coefficients of the cable assembly are approximately 2×10^{-4} per lb and 1×10^{-5} per °C.

5.2 Cable Between Preamplifier and Main Amplifier

This cable is a Raychem No. 10023 cable. It has preirradiated polyethylene dielectrics and jackets, is radiation resistant, and is a multilead coaxial cable. The center member of this composite cable is a shielded and jacketed two-conductor coaxial cable for the signals; around the center member are wound three 26-gage and two 20-gage hookup wires for preamplifier supplies, and over all of these are a nickel-clad

copper shield and a preirradiated polyethylene jacket. The maximum overall OD is 0.324 in. The cable will withstand a maximum temperature of 125°C and an accumulated dose of 5×10^8 rad. Following this exposure, the cable can still be coiled on a form whose diameter is 10 times the overall cable diameter.

The Raychem cable is also enclosed within a watertight metallic envelope which may be varied for different reactor applications. The metallic envelope also serves as an electrical shield. For example, a stainless steel hose covered with polyvinyl chloride is used at the Oak Ridge Research Reactor (ORR).

6. ELECTRICAL SHIELDING LAYOUT

Multiple electrical shields are provided to prevent excessive electrical noise pickup in the fission chamber and preamplifier assembly. Figure 6 shows schematically the general shielding and grounding layout. A first, or inner shield, covers the entire path of the signal from the fission chamber to the main amplifier input. This shield includes the cathode of the fission chamber, the outer braid of the BIW coaxial cable, a solid brass foil surrounding the preamplifier, and the two braids of the Raychem multilead coaxial cable. The preamplifier common node, or ground, is electrically connected to the inner shield, which is electrically insulated from an outer shield, or shell, of the assembly. This outer shield includes the fission chamber casing, the corrugated flexible metal tubing between the chamber and the preamplifier, the preamplifier casing (insulated from the brass foil shield), the metallic envelope surrounding the Raychem cable (described in Sect. 5.2), and a shielding which forms an extension of the metallic envelope to the main amplifier in the reactor control room. The grounding of the inner and outer shields is discussed in Sect. 7.2.

7. OPERATIONAL PERFORMANCE OF THE ASSEMBLY

7.1 Life Performance

Following the period of development and test, two separate start-up channels using this type of assembly were installed as part of the ORR reactor control instrumentation. The two fission chamber and preamplifier assemblies were immersed in the ORR pool. The assembly installed on August 28, 1962, was still operating properly 22 months later. The second assembly installed on March 15, 1963, was removed on August 29, 1963, for reasons later discovered not to involve failure of the assembly. The replacement assembly installed on August 29, 1963, was still operating properly 10 months later. The assembly removed on August 29, 1963, has been subsequently tested and is also in operating condition. Although the statistics are inadequate for quantitative conclusions, our experience suggests that the in-service life is greater than 1 year.

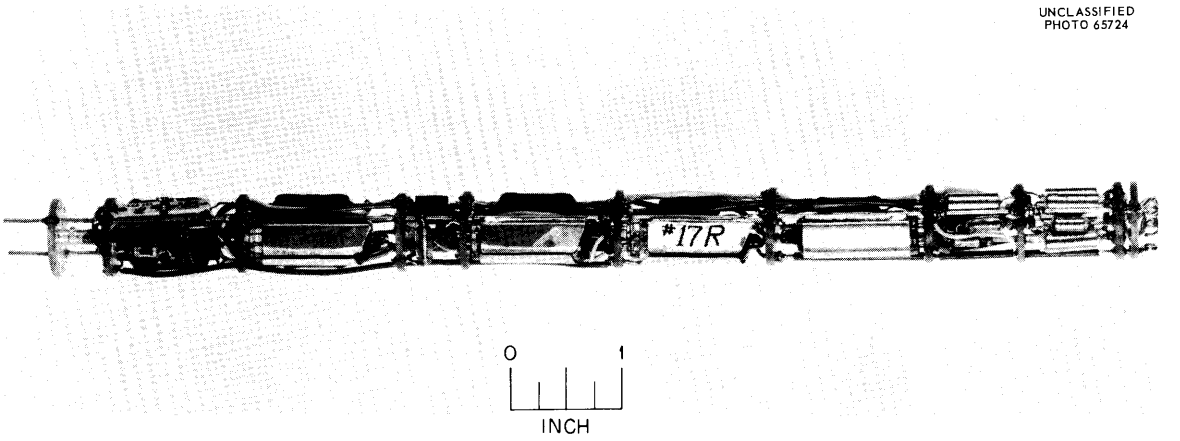

Fig. 5. Preamplifier Component Layout.

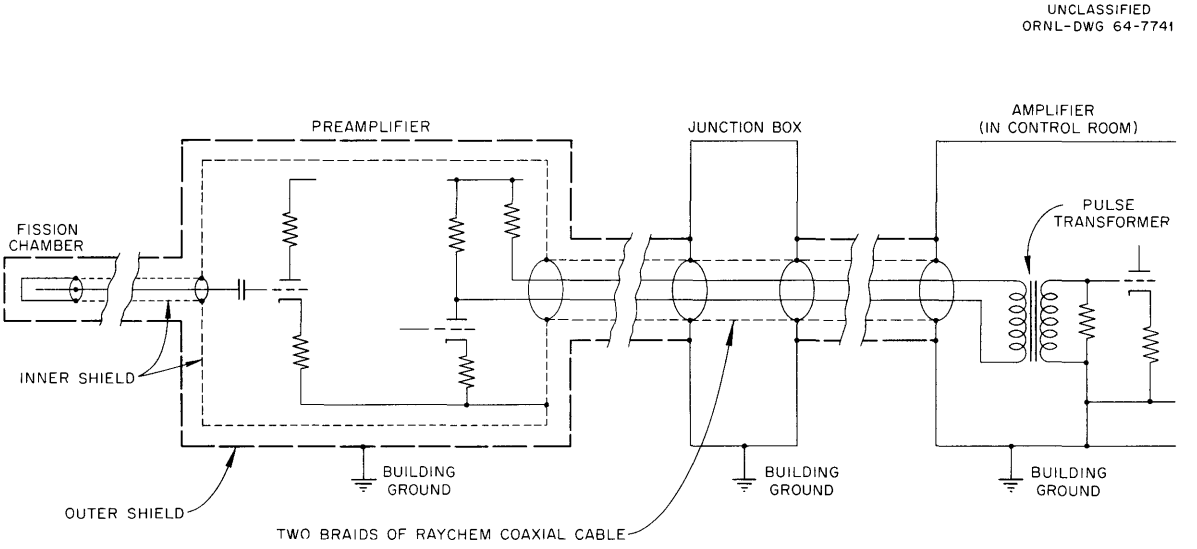

Fig. 6. General Shielding and Grounding Layout of the Assembly.

7.2 Low Pickup-Noise Performance

Extensive experimentation with different counting channels using this assembly was required to reduce its susceptibility to electrical noise pickup. The principal source of electrical noise pickup is electromagnetic radiation from ac power lines which are shock excited where some piece of equipment is turned on or off. The sensitivity to noise pickup has been minimized by the short separation distance between the preamplifier and the chamber, the large output signal from the preamplifier, the balanced configuration with common-mode noise rejection, and the multiple electrical shielding.

The lowest noise pickup is achieved with this assembly when the inner and outer shields are connected together in several places, for example at the junction box and at the main amplifier, as shown in Fig. 6. This is contrary to the generally accepted precept of avoiding ground loops. Apparently, the capacitive coupling between shields defeats any attempt at isolation of the system from the building ground. With the connections described herein and shown in the Fig. 6, the pulses from pickup are no larger at the main amplifier input than the pulses of the alpha particles produced in the fission chamber, even when the assembly is located in the noisiest reactor installations available at ORNL.

8. APPENDIX

8.1. List of Drawings and Assembly and Test Procedures

8.1.1 Fission Chamber Drawings

1. Q-2217-1, Cylindrical Fission Chambers: Assembly and Details.

8.1.2 Fission Chamber and Preamplifier Assembly Drawings

1. Q-2617-1-1 R0, Fission Chamber and Preamp. Housing Assemblies.
2. Q-2617-1-2 R0, Fission Chamber Housing Details.
3. Q-2617-1-3 R0, Preamplifier Housing Details.
4. Q-2617-1-4 R0, Preamplifier Circuit Diagram.
5. Q-2617-1-5 R1, Preamplifier Wiring Diagram.
6. Q-2617-1-6 R0, Preamplifier Layout and Details.
7. Q-2617-1-7 R0, Potting Mold Details.
8. Q-2617-1-8 R1, 3/4 in. Fission Chamber and Preamp. Parts List.
9. Q-2617-1-9 R0, Glass Fiber Coaxial Assembly.

8.1.3 Fission Chamber and Preamplifier Assembly and Test Procedures

1. P-2617, Fission Chamber and Preamplifier Assembly and Test Procedures.

8.2 Preamplifier Power Supply and Pulse Transformer Network

Depending on use, two power supplies have been designed for the preamplifier and the fission chamber: (1) Operating from the 115-v ac power line, and (2) Operating from a 32-v dc power source.

8.2.1 Drawings for AC Power Supply

1. Q-2617-4-1 R0, AC Power Supply Circuit and Cable Matching Network.
2. Q-2617-4-2, AC Power Supply: Layout.
3. Q-2617-4-3, AC Power Supply: Panel.
4. Q-2617-4-4, AC Power Supply: Parts List.

8.2.2 Drawings for DC Power Supply

1. Q-2617-5-1 R0, Fission Chamber and Preamp: DC Power Supply Circuit.
2. Q-2617-5-2 R0, Fission Chamber and Preamp: DC Power Supply Details.

3. Q-2617-5-3 R0, Fission Chamber and Preamp: DC Power Supply Metalphoto Panel.
4. Q-2617-5-4 R0, Fission Chamber and Preamp: DC Power Supply Printed Circuits Board.
5. Q-2617-5-5 R0, Fission Chamber and Preamp: DC Power Supply Assembly.
6. Q-2617-5-6 R0, Fission Chamber and Preamp: DC Power Supply Parts List.

8.2.3 Discussion

These power supplies supply +300 v for the chamber voltage, +110 v for the plate voltage, and −25 to −22 v (adjustable) for the filaments and bias. The filament supply includes a current limiter to protect the tubes against a possible short circuit in the preamplifier filament circuit.

A monitoring circuit was designed for midscale readings of the meter for normal values of all voltages and currents.

The power supply case is grounded to the building ground for personnel protection. However, all the supply circuits inside the case are insulated from the case itself and are grounded at the preamplifier.

The pulse transformer that terminates the preamplifier output cable is physically located in the power-supply chassis of the ac model and in the instrument drawer of the 32-v equipment.

8.3 Modification to Reactor Control A-1D Amplifier Q-1875

A few modifications have been made in the Reactor Control A-1D Amplifier (Q-1875) in order to use it with the preamplifier. These are shown in the following drawings:

1. RC-2-12-5A, Reactor Control Pulse Amplifier: Circuit.
2. RC-2-12-5B, Reactor Control Pulse Amplifier: Chassis.
3. RC-2-12-5C, Reactor Control Pulse Amplifier: Panel.
4. RC-2-12-5D, Reactor Control Pulse Amplifier: Subchassis.

The principal change made in the amplifier accomodates an input signal having a large undershoot. The signal from the preamplifier has such an undershoot, which cuts off the unmodified output cathode followers and causes the amplifier to block. Circuit modifications consist of adding 130-mh inductors to the cathode load resistors and pull-down diodes between the grids and cathodes of the cathode followers. The inductors act as constant current sources, permitting the absolute cathode voltage to drop below ground level; the pull-down diodes (which are normally nonconducting) preserve the required rate of fall of the output signal by transferring tube conduction to the preceding stage under conditions of capacitive loading.

The feedback trimmer capacitors are replaced with fixed 10-pf mica capacitors. The 6A15 diode must be removed from the pulse-height selector circuit. This diode should not be used even with the unmodified circuit.

The foregoing modifications have no effect on the performance of the amplifier when used with the original A-1D preamplifier.

ORNL-3699
UC-37 — Instruments
TID-4500 (32nd ed.)

INTERNAL DISTRIBUTION

1. Biology Library
2-4. Central Research Library
5. Reactor Division Library
6-7. ORNL — Y-12 Technical Library
Document Reference Section
8-42. Laboratory Records Department
43. Laboratory Records, ORNL R.C.
44. J. L. Anderson
45. J. A. Auxier
46. A. M. Billings
47. T. V. Blalock
48. C. J. Borkowski
49. H. R. Brashear
50. W. T. Clay
51. C. W. Collins
52. R. A. Costner, Jr.
53. J. A. Cox
54. F. L. Culler
55. J. T. DeLorenzo
56. J. M. Farmer
57. D. N. Fry
58. G. C. Guerrant
59. S. H. Hanauer
60. F. F. Haywood
61. P. G. Herndon
62. W. H. Jordan
63. C. E. Larson
64. J. L. Lovvorn
65. L. C. Oakes
66. H. G. O'Brien
67. J. W. Poston
68. J. L. Redford
69. D. P. Roux
70. J. B. Ruble
71. G. S. Sadowski
72. M. J. Skinner
73. L. E. Stanford
74. W. L. Stirling
75. R. S. Stone
76. J. A. Swartout
77. J. R. Tallackson
78. A. M. Weinberg
79. H. D. Wills
80. H. N. Wilson

EXTERNAL DISTRIBUTION

81. E. Fairstein, Tennelec Instrument Co., Oak Ridge, Tennessee
82. J. L. Kaufman, Babcock and Wilcox Co., Lynchburg, Virginia
83. Research and Development Division, AEC, ORO
84-720. Given distribution as shown in TID-4500 (32nd ed.) under Instruments category (100 copies — OTS)