OAK RIDGE NATIONAL LABORATORY LIBRARIES
3 4456 0548385 7

CENTRAL RESEARCH LIBRARY
DOCUMENT COLLECTION

ORNL-3613
Special

THE JOINT NATIONAL INSTITUTES OF HEALTH–ATOMIC ENERGY COMMISSION ZONAL CENTRIFUGATION PROJECT

I. THE DEVELOPMENT OF LOW-SPEED ZONAL ROTORS

N. G. Anderson
H. P. Barringer
C. E. Nunley
R. E. Canning
E. F. Babelay
C. L. Burger
C. T. Rankin

OAK RIDGE NATIONAL LABORATORY
operated by
UNION CARBIDE CORPORATION
for the
U.S. ATOMIC ENERGY COMMISSION

LEGAL NOTICE

This report was prepared as an account of Government sponsored work. Neither the United States, nor the Commission, nor any person acting on behalf of the Commission:

A. Makes any warranty or representation, expressed or implied, with respect to the accuracy, completeness, or usefulness of the information contained in this report, or that the use of any information, apparatus, method, or process disclosed in this report may not infringe privately owned rights; or

B. Assumes any liabilities with respect to the use of, or for damages resulting from the use of any information, apparatus, method, or process disclosed in this report.

As used in the above, "person acting on behalf of the Commission" includes any employee or contractor of the Commission, or employee of such contractor, to the extent that such employee or contractor of the Commission, or employee of such contractor prepares, disseminates, or provides access to, any information pursuant to his employment or contract with the Commission, or his employment with such contractor.

ORNL-3613
Special

Contract No. W-7405-eng-26

BIOLOGY DIVISION

THE JOINT NATIONAL INSTITUTES OF HEALTH–ATOMIC ENERGY COMMISSION ZONAL CENTRIFUGATION PROJECT

I. THE DEVELOPMENT OF LOW-SPEED ZONAL ROTORS

N. G. Anderson, H. P. Barringer, C. E. Nunley, R. E. Canning,
E. F. Babelay, C. L. Burger, and C. T. Rankin

OCTOBER 1964

NOTICE

This document contains information of a preliminary nature and was prepared primarily for internal use. It is subject to revision or correction and, therefore, does not represent a final report. Quotations from or references to this report must not be made in open literature without written permission from the individual authors.

OAK RIDGE NATIONAL LABORATORY
Oak Ridge, Tennessee
operated by
UNION CARBIDE CORPORATION
for the
U. S. ATOMIC ENERGY COMMISSION

OAK RIDGE NATIONAL LABORATORY LIBRARIES

3 4456 0548385 7

CONTENTS

Abstract 1

Introduction 1

Principles of Operation 2

Rotor A-V 3

Rotor A-VI 7

Rotor A-IX 9

Discussion 15

References 15

THE JOINT NATIONAL INSTITUTES OF HEALTH–ATOMIC ENERGY COMMISSION ZONAL CENTRIFUGATION PROJECT

I. THE DEVELOPMENT OF LOW-SPEED ZONAL ROTORS[1]

N. G. Anderson H. P. Barringer C. E. Nunley R. E. Canning
E. F. Babelay C. L. Burger[2] C. T. Rankin

ABSTRACT

Two low-speed zonal centrifuge rotors (designated A-V and A-VI) have been developed to test the feasibility of zonal separation of particles in the micron size range. Based on these studies rotor A-IX has been designed. It has a capacity of 1300 ml, a maximal design speed of 6000 rpm, and suitable seals to allow the gradient and sample layer introduction as well as gradient and zone recovery during rotation. The applicability of this rotor to the problem of isolating subcellular particles is demonstrated.

INTRODUCTION

The problem of devising a general method for separating large amounts of particles whose sizes cover the range resolved by the electron microscope, namely from whole cells to protein molecules, has not been previously solved. In the Svedberg analytical ultracentrifuge particle species in the lower part of this size range are observed as boundaries, but only the last component of a mixture being sedimented is physically separated. The same restrictions apply to conventional differential centrifugation where purification is obtained by repeated sedimentations. The success of this method in cell fractionation studies is due entirely to the very large differences in the sedimentation rates of nuclei, mitochondria, microsomes, and ribosomes. In zonal centrifugation (*1–8*), density gradients are used to stabilize the liquid milieu through which particles are separated to allow particles having different sedimentation rates to be separated into discrete zones or bands. Early studies with swinging-bucket rotors demonstrated the feasibility of separating cell components and viruses in density gradients, but only very small amounts of material could be separated, and considerable time and effort were required to form and recover the gradients.

Since high gravitational fields have a very marked stabilizing effect on liquid density gradients, the possibility of forming and recovering gradients during rotation was investigated and a simple system for directing a gradient stream to tubes in a swinging-bucket rotor developed (*9*).

[1]Work supported by the Joint National Institutes of Health–Atomic Energy Commission Zonal Centrifuge Development Program.

[2]Loanee, Chas. Pfizer Company.

The gradients, however, were recovered at rest. The possibility of eliminating centrifuge tubes was next investigated, using a hollow-bowl rotor and simple methods for introducing and recovering density gradients (*10*). The success of this early work prompted the development of eighteen rotor systems covering a wide range of speeds and capacities. These include Series A rotors, three of which are described here, which are suitable for the separation of particles ranging in size from whole cells to mitochondria. Series B rotors are designed for operation at intermediate speeds (up to 40,000 rpm) and are useful for separating particles having sedimentation coefficients as low as 30S and possibly lower. For viral and molecular separations at speeds up to 141,000 rpm, the Series C rotors are being developed, whereas the D series are in an early stage of testing and are designed for trans million $\times$ *g* operation. In this paper the design and operation of rotors A-V, A-VI, and A-IX are described. Subsequent papers in this series will be concerned with other rotor systems and with their application to biological problems.

PRINCIPLES OF OPERATION

Two methods of operation have been explored. In the first the rotor is loaded and unloaded while spinning at a speed sufficient to stabilize the gradient against the rotor wall (*6,11*). Although this method of dynamic loading is probably adequate for very high resolution, it requires precision seal systems. In the second method the gradients are loaded and unloaded at rest, the gradient being reoriented from a horizontal to vertical configuration during rotation (*12*) in a hollow rotor containing fixed septa.

In the first method two fluid lines are connected to the rotor through a rotating seal. One connects to the rotor edge, the other to the center core. During rotation a density gradient is introduced to the rotor edge through the edge line. The light end of the gradient is pumped in first, and is oriented uniformly around the inner surface of the rotor by centrifugal force as shown in Fig. 1A. As succeedingly denser portions of the gradient are pumped in, they flow to the edge and displace the lighter parts of the gradient toward the axis of rotation. When the rotor is full (Fig. 1B) the direction of flow is reversed and the sample layer is pumped in through the center line (Fig. 1C). A small volume of fluid having a density less than that of the sample layer is pumped in after the sample to move it out away from the core (Fig. 1D). The rotor is accelerated to operating speed and maintained at that speed until the desired separation is achieved (Fig. 1E). It is then decelerated to unloading speed. Unloading is accomplished by pumping a dense fluid to the edge of the rotor causing the gradient to flow out through the center core (Fig. 1F), through suitable absorbance or radioactivity monitors, and into a fraction collector.

In the reorienting gradient rotor the gradient is introduced to the bottom of the rotor during rest. The sample is introduced by reverse flow through the top and is followed by a light overlay. During gradual acceleration the axial gradient is reoriented to a radial gradient by centrifugal force. After particle separation has been effected, the gradient reorients to the original configuration as it is brought to rest. Gradient recovery is by displacement out the upper fluid line, or by drainage out the bottom.

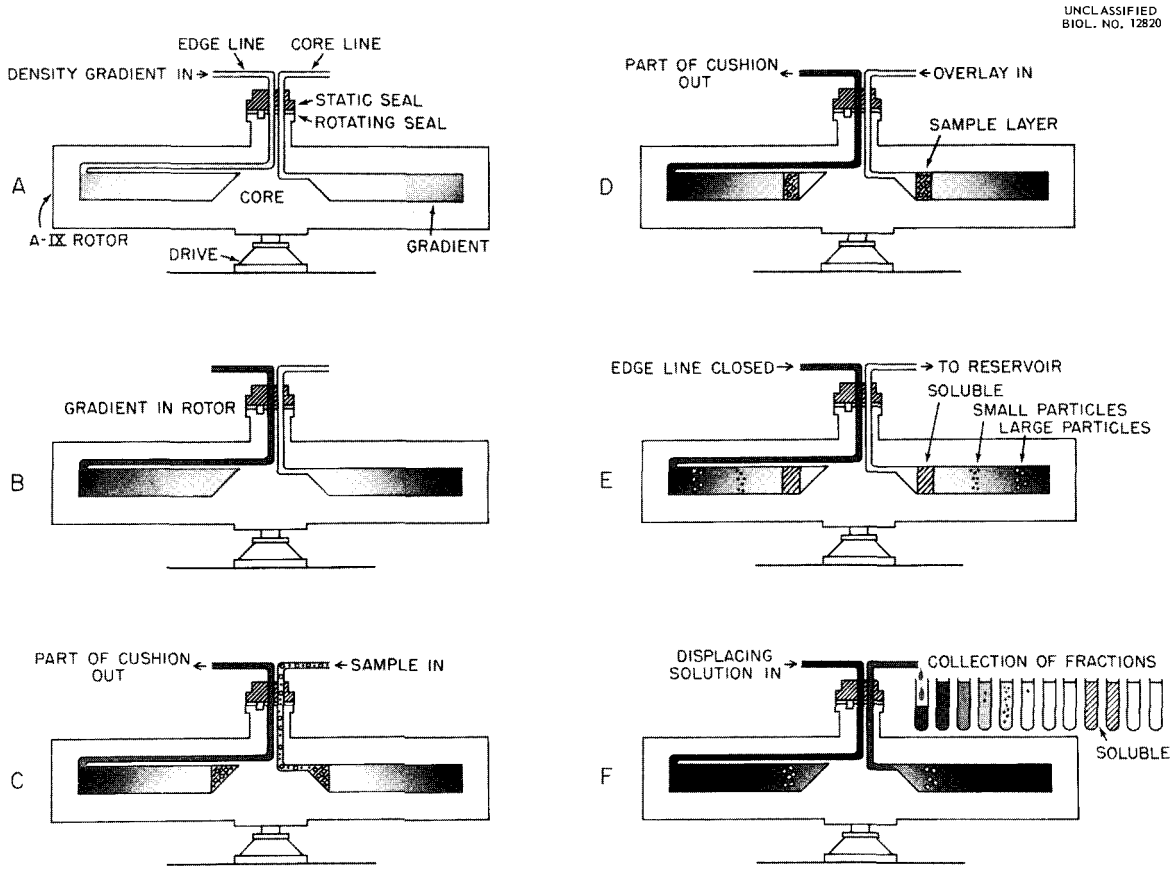

Fig. 1. Schematic Diagrams of Operation of Series A Dynamically Loaded Rotors. The hollow cavity in the rotor is divided by septa into sector-shaped compartments. Two fluid lines are connected through a flat face seal to the rotor core and to the rotor edge in such a manner that fluid may be pumped in either direction through the rotor during rotation. At low speed the rotor is filled by pumping the gradient in through the edge line (A) until the rotor is filled (B). The direction of fluid flow is then reversed and the sample layer pumped in through the core line (C) and then pushed out by a fluid less dense than the sample until the sample layer is free of the core (D). The rotor is accelerated to operating speed to achieve the desired separations (E). The rotor is then decelerated to unloading speed and the gradient displaced out through the center core by pumping a dense fluid to the rotor edge (F).

One purpose of this work has been to compare the resolution obtained in the two rotor systems. This paper concerns the low-speed, dynamically loaded rotors. A prototype reorienting gradient rotor has been described (*12*), and additional prototypes are now being tested.

ROTOR A-V

Initial studies on rotors A-III and A-IV effectively demonstrated the feasibility of dynamically loaded and unloaded zonal centrifuges. It appeared desirable to be able to observe the entire procedure, to be able to detect anomalous sedimentation at various times during the centrifugation, and to be able to determine directly the optimal time to unload the gradient.

In dynamically loaded Series A rotors, length has been minimized to give a ratio of $I_{spin}/I_{transverse} > 1$ for the moments of inertia, thus providing a configuration which spins about its most stable axis. Rotor A-V was designed to examine the possibility of separations at very low speeds (500 to 1000 rpm). While loading and unloading of intermediate speed rotors (B-II and B-IV) at much higher speeds is feasible (6), the stabilizing effect of centrifugal force is much less at very low speeds and the possibility of mixing during introduction of the sample layer correspondingly increased. Since the pressures and stresses are relatively small, large-diameter methacrylate resin endplates may be used. Figure 2 is a diagram of the A-V rotor. The interior

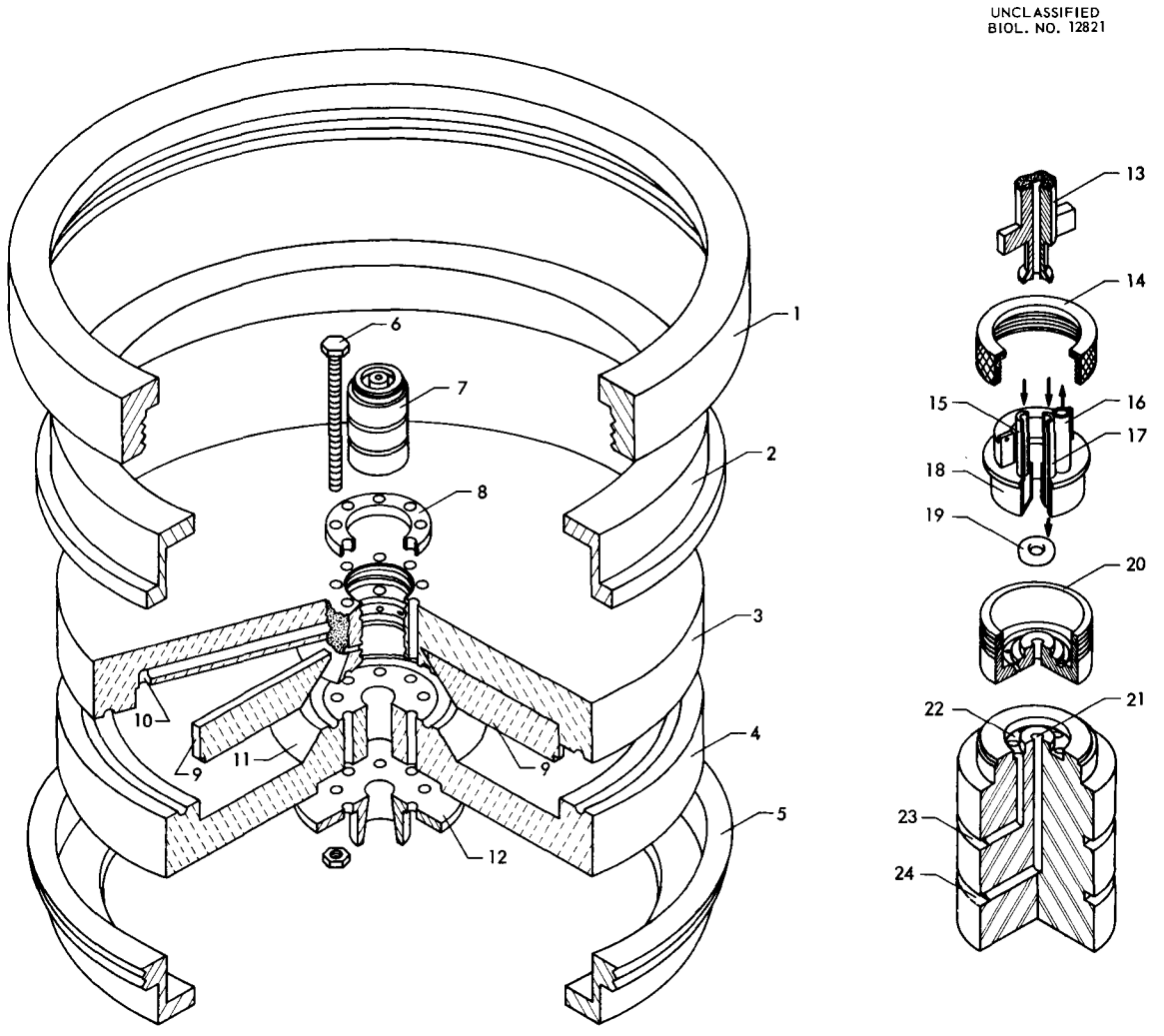

Fig. 2. Schematic Drawing of Rotor A-V. (1) Coupling ring; (2) upper retaining ring; (3) upper end plate; (4) lower end plate; (5) lower retaining ring; (6) retaining bolts; (7) filled Teflon rotating seal; (8) bolt locating ring; (9) septa; (10) fluid line to edge of rotor; (11) conical-section core; (12) drive shaft adapter; (13) stationary seal flexible mount and fluid line to center of rotor; (14) stationary seal coupling ring; (15) coolant inlet; (16) coolant outlet; (17) fluid line to edge of rotor; (18) cooling jacket; (19) O-ring; (20) stationary seal; (21 and 24) flow passage through rotating seal to center of rotor; (22 and 23) flow passage through rotating seal to edge of rotor.

is divided into eight sector-shaped compartments, each 2.72 cm deep, with maximum and minimum radii of 13.60 and 3.49 cm. The upper and lower end plates are of 3.26-cm-thick clear plastic, and the internal volume is 1300 ml.

All parts of a zone of one density in a zonal centrifuge constitute a paraboloid of revolution about the axis of rotation (*12*). A single conical-section core therefore has been used which allows the sample layer to slope 45° or more as it approaches the rotor center. The rotating seal was constructed of filled Teflon (Rulon) while the static fluid-line seal was constructed of stainless steel and was flexibly mounted to allow alignment to the plane of the rotating seal during operation. Chilled water was circulated through the upper seal to remove frictional heat.

Water was added to the rotor in 100-ml increments and the position of the meniscus was carefully determined at 1000 rpm. From these data a chart of volume as a function of radius was drawn. The position of any portion of the gradient recovered during unloading can then be related to its original position in the rotor. All work was performed in an International Equipment Co. Model PR-2 refrigerated centrifuge with a transparent plastic lid.

Performance of the A-V Rotor. – To determine whether or not density gradients could be introduced into the rotor and recovered without extensive mixing, a density gradient was analyzed refractometrically both before introduction and after spinning in the rotor for 15 min at 1000 rpm. Negligible differences between the two gradients were seen.

A sample zone introduced into the rotor is widened by laminar flow through the tubing and rotor core, by any turbulence or convection in the rotor, and by diffusion. To determine how much widening would occur in practice, a sample zone containing 4% bovine serum albumin (BSA) having a total volume of 20 ml was introduced over a sucrose gradient. When moved to a position just external to the core, the sample zone has a calculated width of 0.1 cm. The rotor was spun at 1000 rpm at 5°C ($152 \times g$ at R_{max} and $39 \times g$ at R_{min}). When the gradient was recovered, the absorbance recording of the sample zone showed a peak whose width at half height was equivalent to a zone width of 0.3 cm in the centrifuge. This amount of broadening is not considered excessive.

Three types of experiments were performed to determine the resolution obtainable with this rotor. In the first, ragweed pollen grains were observed during sedimentation. In the second, rat red cells were centrifuged to their isopycnic position, while in a third series of experiments a method for isolating calf thymus nuclei that retained their ability to incorporate amino acids was developed (*13*). Preliminary experiments with ragweed pollen suggested that more uniform behavior could be obtained if the grains were first fixed in alchol. Two hundred milligrams of pollen was suspended in 10 ml of 95% ethanol, centrifuged briefly, and the pollen resuspended in 10 ml of 8.5% sucrose. This volume of material was used as the sample layer and was introduced inboard of a 1200-ml gradient extending from 17 to 55% (w/w) sucrose. Fifty-five percent sucrose was also used as the "cushion" outboard of the gradient. After 10 min at 1000 rpm the gradient was recovered by displacement. Photographs of the rotor during the run are shown in Fig. 3. When the fractions were examined by dark field phase-contrast microscopy, no particles were observed through the gradient except at the level of the zone observed visually. In experiments

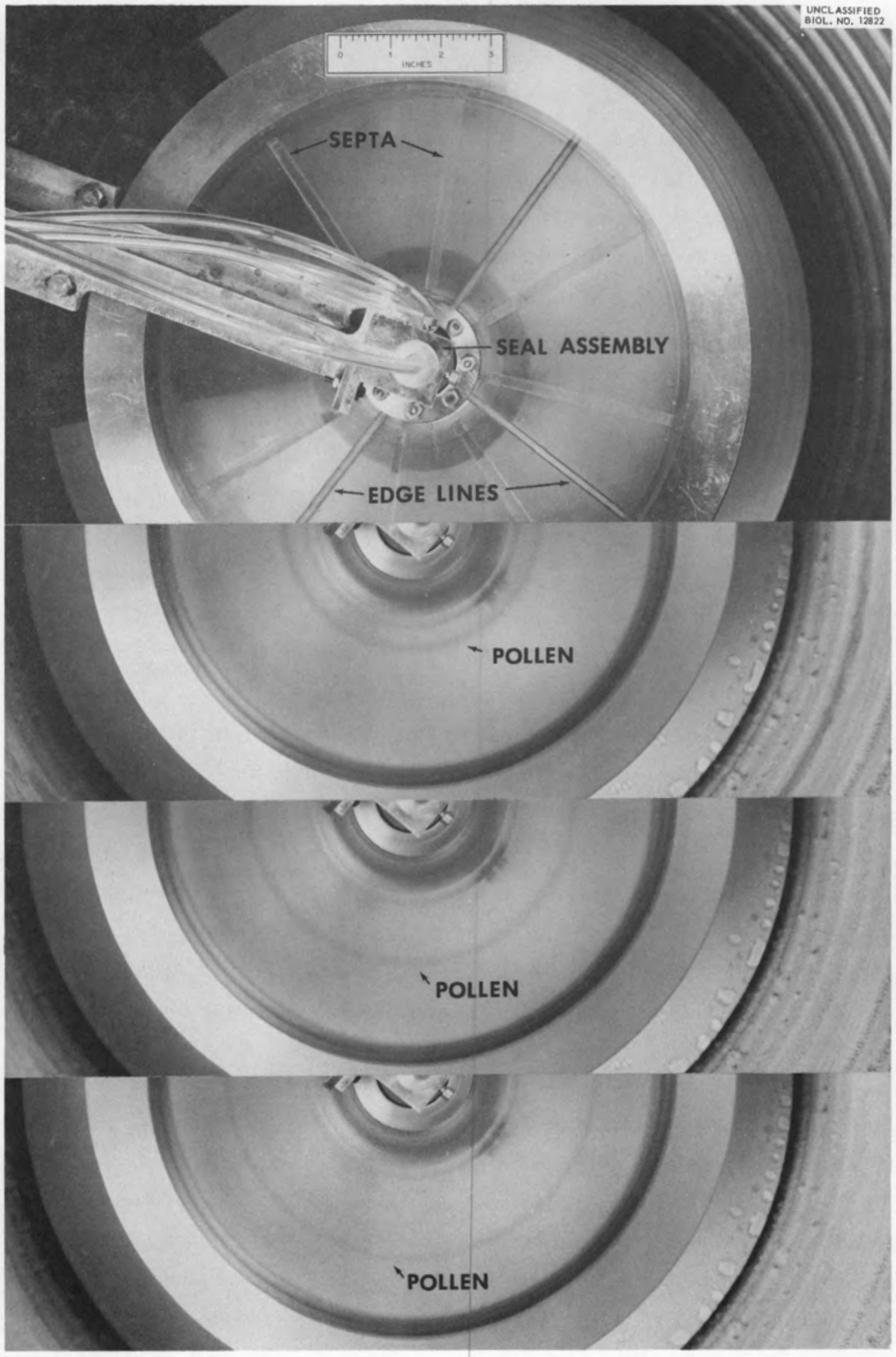

Fig. 3. Sedimentation of Ragweed Pollen in Rotor A-V.

with rat red cells two isopycnic bands were repeatedly observed. The basis for this fractionation has not been determined. These results indicate that the principles previously employed in the Series B zonal ultracentrifuge (*6*) can be applied to large particle separations in a very low-speed rotor.

ROTOR A-VI

Rotor A-VI is the largest low-speed zonal rotor presently contemplated. It is designed to explore large scale nuclear isolation and the separation of different cell types in a mixture such as occurs, for example, in bone marrow suspensions.

The rotor has a 3-liter capacity, is designed for operation at 6000 rpm and a maximal centrifugal force of $7100 \times g$. The design specifications were fixed by the speed, permissible diameter, and thrust-bearing capacity of the PR-2 centrifuge. The design does not approach the stress limits of the 7075-T6 aluminum used for the rotor wall. The partially disassembled rotor is shown in Fig. 4 while the rotor and seal system assembled for use are shown in Fig. 5. The initial intent was to provide a fairly uniform centrifugal field by using a large-diameter central core to keep

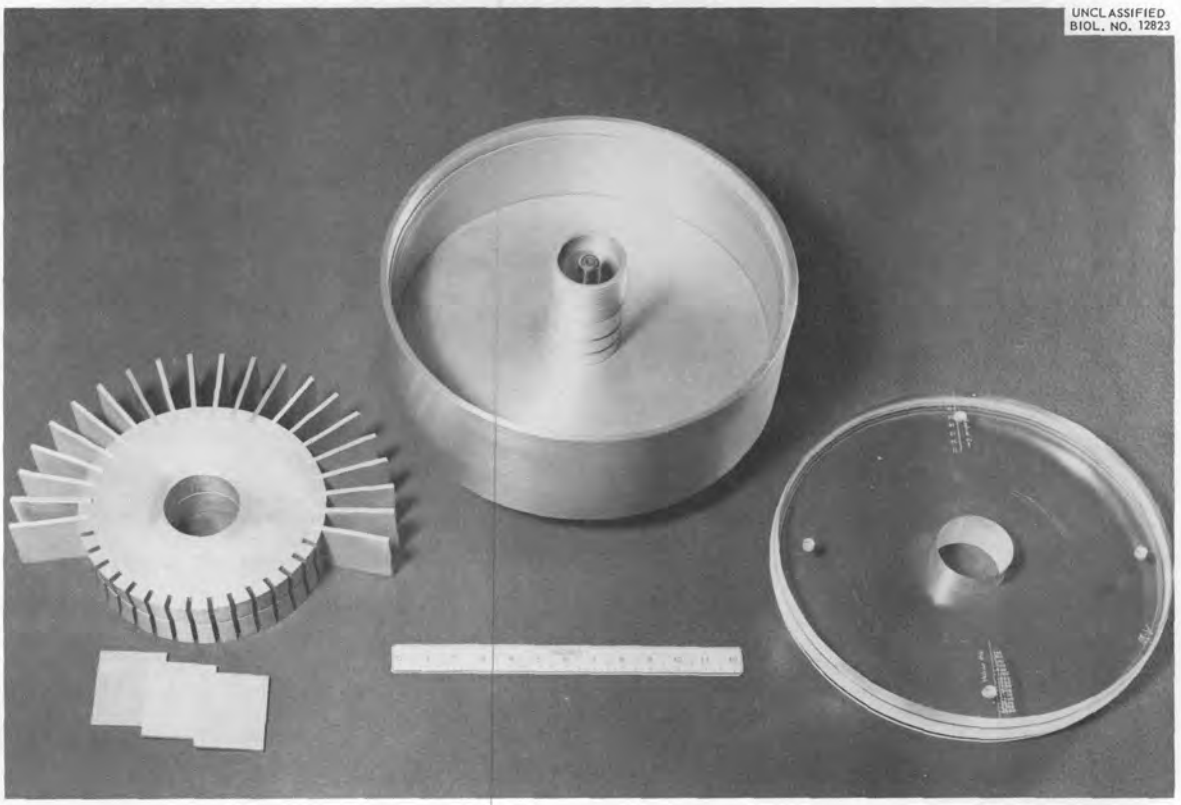

Fig. 4. Rotor A-VI Partially Disassembled. Core with septa shown at left, main body of rotor in center, with transparent upper end plate at right.

Fig. 5. Rotor A-VI and Seal Assembly Mounted in PR-2 Centrifuge. The rotor is visible during operation through the plastic top of the centrifuge.

the entire gradient close to the rotor edge. The central core diameter is 22.86 cm and the inside rotor diameter is 35.56 cm, giving a gradient chamber length of 6.35 cm. At the design speed of 6000 rpm with a sucrose density gradient in position, a rather large radial growth (approximately 0.04 cm) occurs. Since the end caps increase in diameter by only a few thousandths of a centimeter, a mechanism was needed to center the rotor chamber wall with respect to the end caps, and to maintain concentricity to the drive spindle. Plated brass plates (one in each end cap), which expanded during centrifugation at a rate intermediate between that of the rotor wall and the end plates, were employed. Without the brass plates the run-out (departure from circularity) increased from the normal 10 μ total indicator reading (TIR) to 25 μ TIR, demonstrating the effectiveness of this method.

By very accurate machining, the necessity of balancing the rotor has been obviated. The only metals in contact with the fluid are anodized aluminum, nickel, monel, or stainless steel. O-rings are used to seal the rotor chamber and all components in the liquid lines.

Three methods have been investigated for obtaining flow into and out of the centrifuge at operating speed. The use of skimmers as previously suggested (*6*) was not successful at the relatively low peripheral speed obtained at the edge of the skimmer disks. As a second approach,

a self-aligning ball-and-socket rotating seal was tested but was ineffective because of distortion of the ball during attachment to the drive and to cold-flowing of the reinforced Teflon of the static seal when under pressure. A third, flat, modified face seal supported by the centrifuge chamber lid has proven effective as long as the centrifuge is in near-perfect balance. Its alignment with the rotating seal is critical. The problem of a self-aligning seal was not solved until the A-IX rotor was developed. An A-IX seal will be adapted to the A-VI rotor.

One top-end cap for rotor A-VI has been fabricated from Lucite to permit viewing of the rotor contents completely across the rotor diameter. With a stroboscopic light the rotor contents can be observed in detail. At the center of the rotor, a large nut limits deflection of the cap and reduces the stress level. Power limitations of the PR-2 drive motor have restricted the top speed in practice to 5160 rpm. Critical frequencies of the spindle system which occur at 700 and 900 rpm have been passed with no difficulty.

Experimental studies using this centrifuge for large scale preparation of subcellular particles will be described in a subsequent paper.

The A-V rotor showed that successful separations could be achieved at low speed, and demonstrated the utility of a completely transparent system, whereas A-VI showed that plastic end caps could be used at speeds up to 5000 rpm. Our attention was therefore directed toward the development of a general purpose rotor with both end caps of plasic transparent materials, and with a self-aligning seal that could achieve sufficient speed to separate subcellular particles as small as mitochondria. In addition, an attempt was made to simplify the rotor as much as possible and to provide for its convenient disassembly. (Rotor A-VII has been described (*12*) and rotor A-VIII which also utilizes the reorienting gradient principle will be described elsewhere.)

ROTOR A-IX[3]

Rotor A-IX, shown in Fig. 6 and diagrammatically in Fig. 7, has been designed to replace rotor A-V, but with a higher maximum operating speed and greater stability. The rotor volume of 1300 ml is divided into eight sector-shaped compartments, each having a depth of 1.49 cm and a maximum radius of 17.78 cm. The central core is a single 45° cone with a maximum radius of 4.79 cm. Flow lines to the rotor edge pass over the septa, thus allowing an unobstructed view of the entire sector-shaped compartment. The rotor weighs approximately 22.68 kg when full of fluid and is held on the centrifuge drive spindle by its own weight.

The rotor has been spun to 4000 rpm both empty and when filled with water. The design speed of 6000 rpm has not been reached due to the limited power of the drive system. Departure fron concentricity (run-out) was measured by use of an inductance type proximity probe (Bentley Proximity Probe, Bentley-Nevada Corp., Minden, Nev.) placed in the centrifuge chamber close to the edge of

[3]Detailed drawings of rotor A-IX may be obtained from the Division of Technical Information Extension, Atomic Energy Commission, Oak Ridge, Tenn.

the rotor. The resulting signal was amplified and displayed on a calibrated oscilloscope. Rotor run-out when empty and when filled with water is shown in Fig. 8. It should be noted that these rotors have not required balancing to achieve satisfactory performance. The large run-outs observed at 400 and 900 rpm when the rotor is filled are rigid body critical frequencies of the centrifuge system. Flow measurements with water suggested that the centrifuge will serve as a satisfactory continuous flow device for large particles, as well as a rate zonal centrifuge. Flow rates of 100 ml/min are easily achieved.

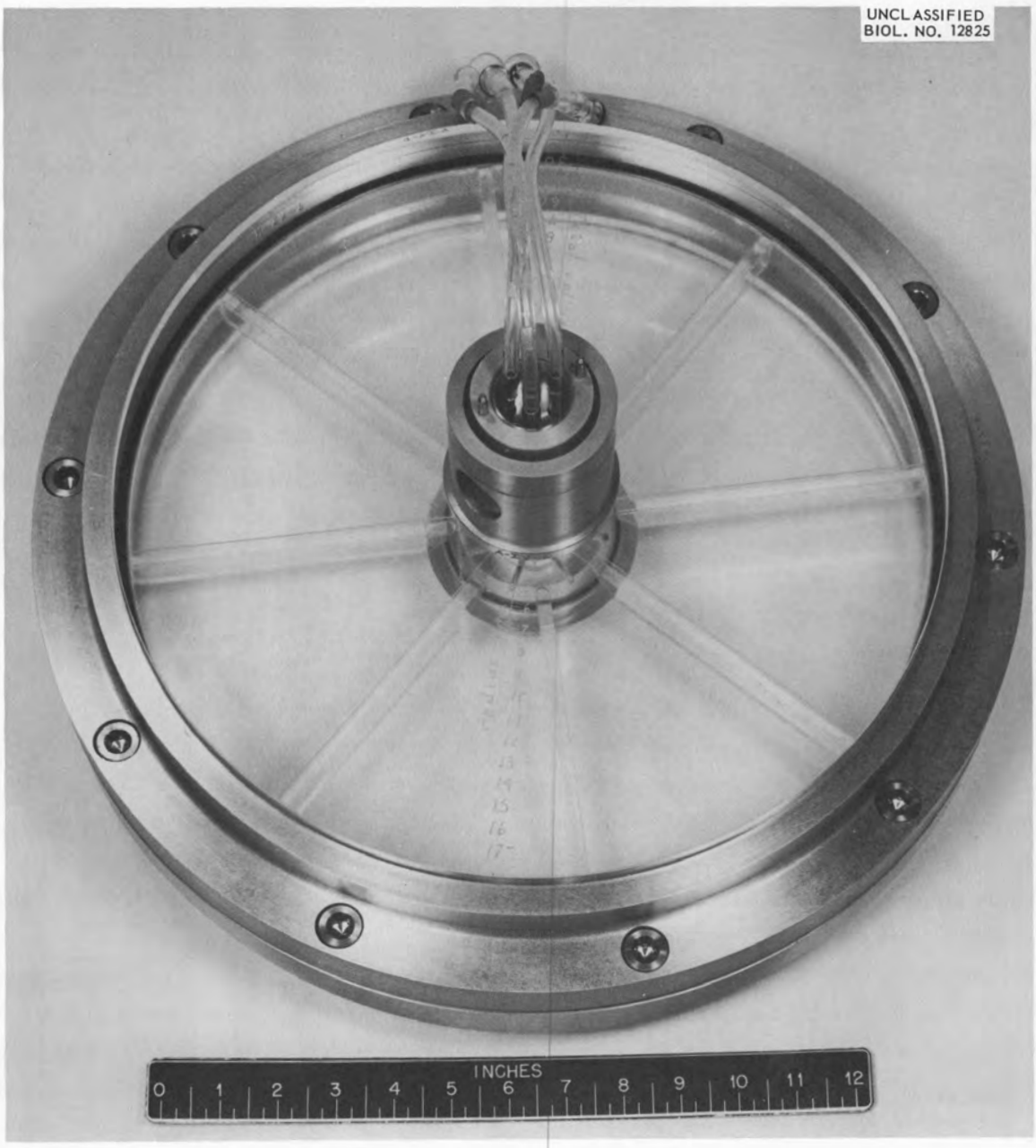

Fig. 6. Rotor A-IX. 6000 rpm, 7150 × *g*, 1.3 liters.

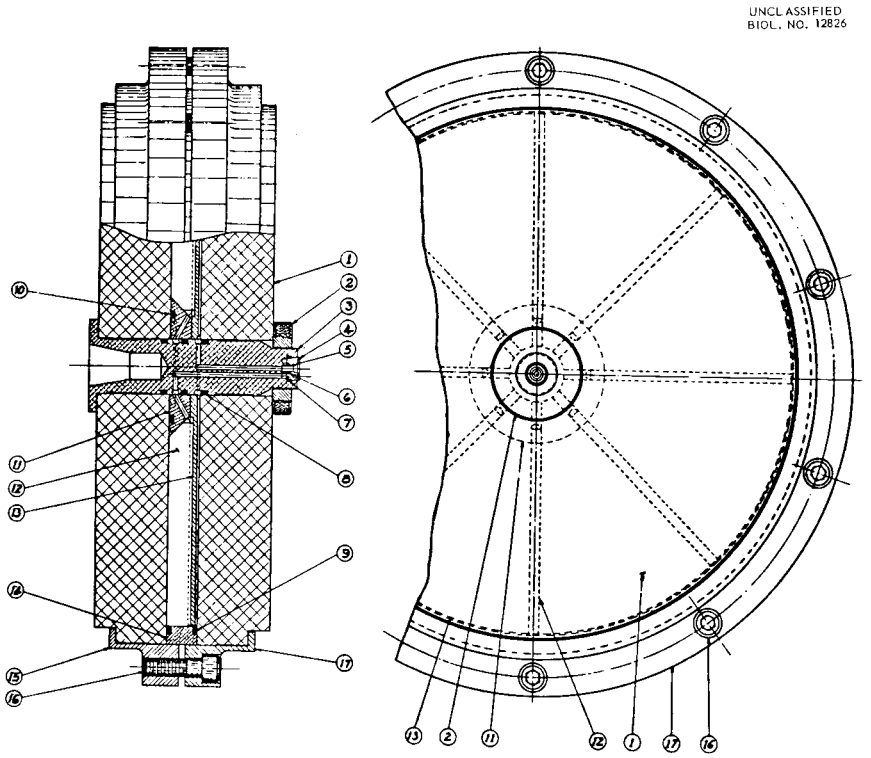

Fig. 7. Diagrammatic Presentation of Rotor A-IX.

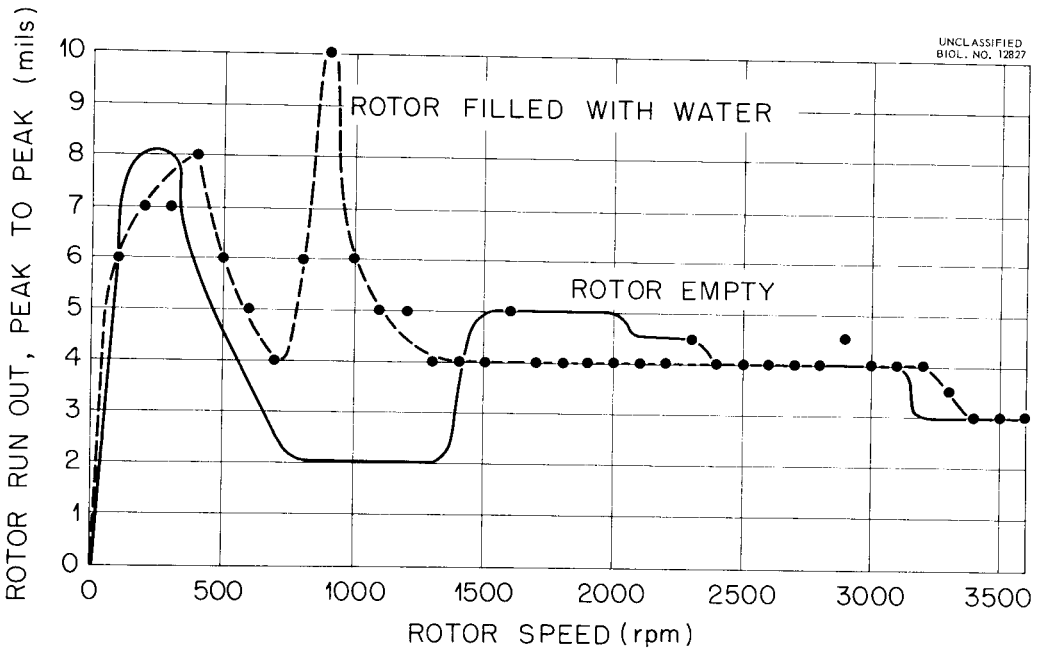

Fig. 8. Runout of Rotor A-IX-b on International Model PR-2 Centrifuge Drive, Expressed in Mils (10^{-3} in.).

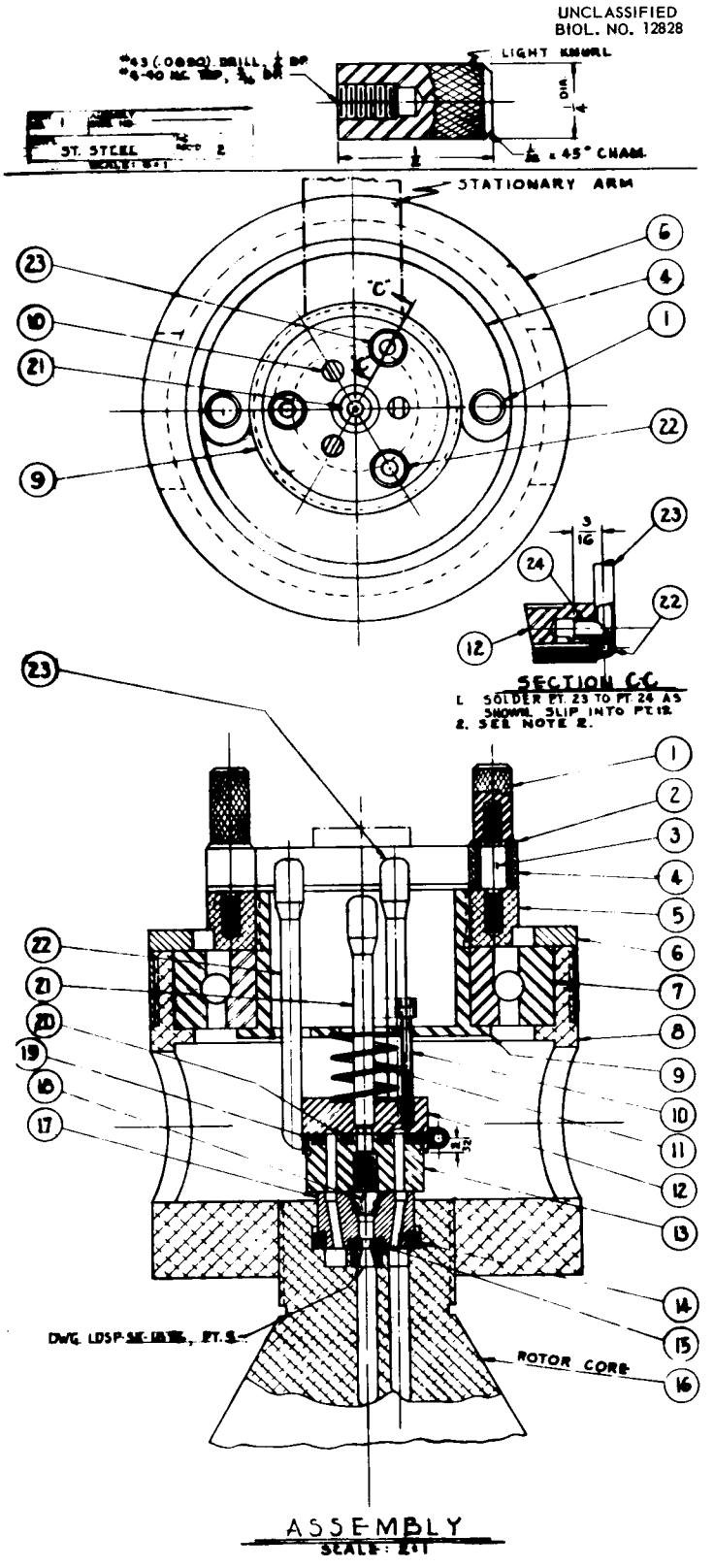

Fig. 9. Diagrammatic Presentation of Seal.

The seal is shown diagrammatically in Fig. 9. A collar attached to the rotor is connected to the static seal through a sealed stainless-steel bearing. Any lateral movement of the rotor and the rotating seal is therefore transmitted directly to the static seal. Rotation of the static seal is prevented by a removable arm attached to the centrifuge cooling chamber. The complete A-IX system is shown in Fig. 10.

Operation of A-IX Rotor. – The rotor is accelerated to approximately 1000 rpm and the density gradient is pumped in at the rate of approximately 25 ml/min using a modified Spinco zonal centrifuge gradient pump (Spinco Division, Beckman Instruments, Palo Alto, Calif.). For most purposes gradients ranging from 17 to 55% or from 10 to 30% w/w sucrose are useful. Both the rotor and the solutions used to prepare the gradient are prechilled to 5°C. When the gradient has filled the rotor and begins to emerge through the core line, the gradient pump is stopped, and a drain line

UNCLASSIFIED
BIOL. NO. 12829

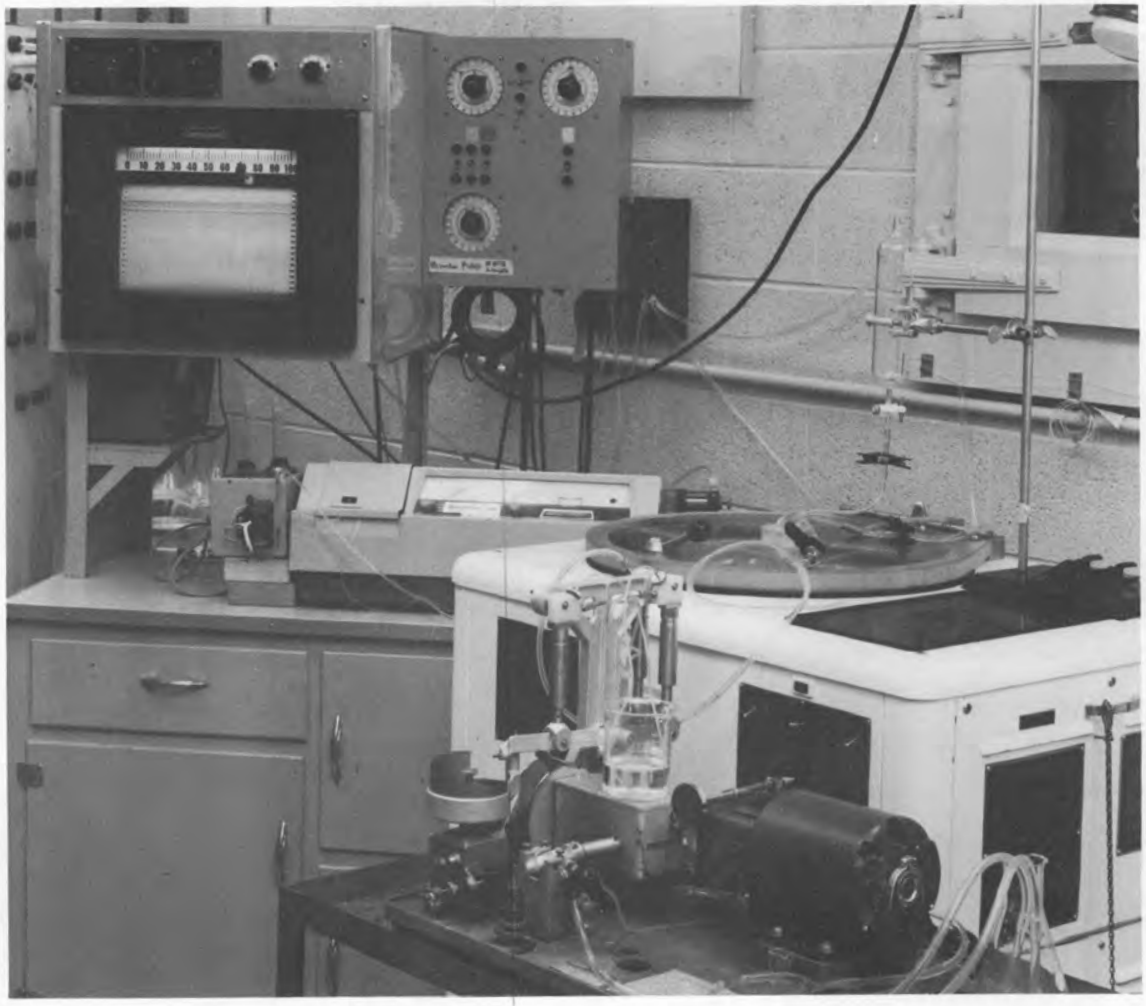

Fig. 10. Overall View of A-IX System.

connected to the line between the pump and the seal is opened. This will allow fluid to escape from the edge of the rotor as the sample layer and the overlay are introduced.

The sample layer (usually 5 to 20 ml) may be introduced through the rotor center or core line using a large syringe, a small vessel pressurized with air, or with a small peristaltic pump. The sample must have a density less than that of the light end of the gradient, or excessive boundary widening will occur. As soon as the sample layer is in, 100 ml or more of a light fluid such as a physiological salt solution or a dilute buffer is pumped in through the same line. An excess of about 25 ml of overlay is then pumped in, the drain line between the pump and the rotor edge line closed, and the gradient pump started with the pump set to pump only dense fluid. The excess overlay is then pumped out into a reservoir containing 75 ml of water which is connected to the rotor center line. The rotor edge line is then clamped off. As the rotor accelerates, expansion will occur. Fluid to compensate for this increase in volume will be drawn from the reservoir attached to the center line. This assures that the seal will not dry out and that the rotor will not become unbalanced by the introduction of air. The rotor is then accelerated to operating speed.

After the desired separation has been made the rotor is decelerated to between 200 to 1000 rpm and the gradient is recovered by pumping dense sucrose into the rotor through the rotor edge line.

The gradient may be monitored for ultraviolet absorbance using the two wavelength monitoring system previously described (*14*). Forty-milliliter fractions are generally collected. The position of any fraction in the rotor can be deduced from the equation:

$$V_z = \pi h\,(r_z^2 - r_c^2) + Vr_c - Nhw\,(r_z - r_c)\ ,$$

where

V_z = volume collected to reach zone z,
Vr_c = volume from point of collection to outer edge of core,
r_z = radius of zone z in rotor before unloading,
r_c = radius to edge of core,
N = number of septa,
h = height of sector shaped compartments, and
w = width of septa.

For rotor A-IX Vr_c = 25 ml, r_c = 4.79 cm, N = 8, h = 1.49 cm, and w = 0.64 cm.

To observe the sedimentation of particles a disk of Lucite having the same outside diameter as the inside of the refrigerated chamber of the centrifuge was mounted under the rotor and painted half white and half black. When the black background was used, particles could be observed by reflected light, whereas particles having appreciable color could best be observed against the white background.

A camera was mounted above the centrifuge, and suitable lights mounted to illuminate the rotor so that photographs could be taken at intervals. An overall view of the system is shown in Fig. 10.

Performance of A-IX Rotor. – The A-IX rotor may be used for a variety of purposes, and the results obtained will depend largely on the specific conditions employed.

To illustrate the separations which may be obtained, a 1-liter gradient ranging linearly with radius from 10 to 42% sucrose (w/w) was introduced into the rotor, and the remainder of the rotor volume was filled with 55% sucrose. Twenty milliliters of a 10% brei was prepared from unperfused rat liver and introduced into the rotor at 400 rpm. The sample was moved out beyond the core with 150 ml of pH 7.5 Miller-Golder buffer, $\mu = 0.1$. The sedimentation of nuclei, red cells, and mitochondria is shown in Fig. 11. Phase contrast microscopy was used to identify the various fractions. No cross contamination between nuclei and mitochondria was observed.

A detailed study of the separation of the larger subcellular components of rat liver will be presented in a subsequent paper.

DISCUSSION

As part of a program of zonal centrifuge development, a series of low-speed rotors has been designed and tested. Of these, three are described in this paper. The A-IX rotor is the most advanced design and is capable of separating cells which differ in sedimentation rate and of fractionating subcellular particles as small as mitochondria. The advantages of direct visual observation of sedimenting zones are that measurement of the rates of sedimentation can be made continuously during centrifugation, and the decision as to when to unload can be more rationally made.

REFERENCES

(*1*) M. K. Brakke, *J. Am. Chem. Soc.* **73**, 1847 (1951).

(*2*) M. K. Brakke, *Advan. Virus Res.* **7**, 193 (1960).

(*3*) G. H. Hogeboom and E. L. Kuff, *J. Biol. Chem.* **210**, 733 (1954).

(*4*) N. G. Anderson, *Exptl. Cell Res.* **9**, 446 (1955).

(*5*) N. G. Anderson, pp. 299–352 in *Physical Techniques in Biological Research*, vol. III, ed. by G. Oster and A. W. Pollister, Academic, New York, 1956.

(*6*) N. G. Anderson, *J. Phys. Chem.* **66**, 1984 (1962).

(*7*) N. G. Anderson, *Nature* **199**, 1166 (1963).

(*8*) C. De Duve, J. Berthet, and H. Beaufay, *Progr. Biophys. Biophys. Chem.* **9**, 325 (1959).

(*9*) J. F. Albright and N. G. Anderson, *Exptl. Cell Res.* **15**, 271 (1958).

(*10*) N. G. Anderson, *Bull. Am. Phys. Soc.*, **I**, **Ser. II**, 267 (1956).

(*11*) N. G. Anderson and C. L. Burger, *Science* **136**, 646 (1962).

(*12*) N. G. Anderson *et al.*, *Anal. Biochem.*, in press.

(*13*) W. D. Fisher and G. B. Cline, *Biochim. Biophys. Acta* **68**, 640 (1963).

(*14*) N. G. Anderson, *Anal. Biochem.* **4**, 269 (1962).

UNCLASSIFIED
BIOL. NO. 12830

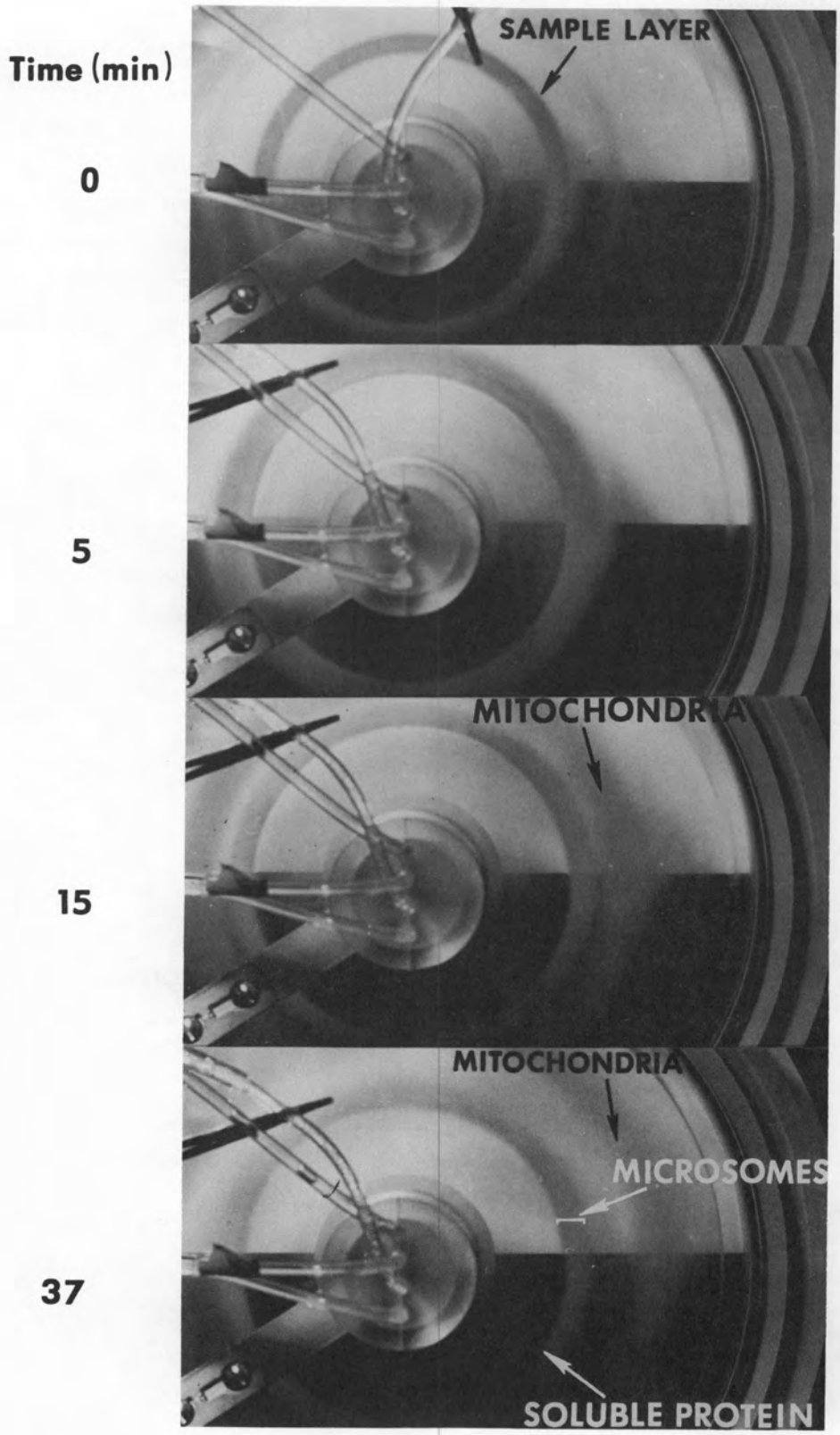

Fig. 11. Separation of Rat Liver Subcellular Components in a Sucrose Gradient in the A-IX Rotor.

INTERNAL DISTRIBUTION

1. S. I. Auerbach
2. R. E. Biggers
3. A. L. Boch
4. D. S. Billington
5. E. P. Blizard
6. C. J. Borkowski
7. G. E. Boyd
8-9. C. E. Center (ORGDP)
10-11. D. D. Cowen
12. C. J. Collins
13. F. L. Culler
14. B. R. Fish
15. J. L. Fowler
16. J. H Frye, Jr.
17. R. F. Hibbs (Y-12)
18. A. S. Householder
19. J. S. Johnson
20. R. W. Johnson
21. W. H. Jordon
22. M. T. Kelley
23. J. A. Lane
24-25. C. E. Larson
26. T. A. Lincoln
27. S. C. Lind
28. R. S. Livingston
29. K. Z. Morgan
30. D. J. Nelson
31. M. L. Nelson
32. J. S. Olson
33-34. R. B. Parker
35. M. E. Ramsey
36. R. M. Rush
37. M. J. Skinner
38. J. A. Swartout
39. E. H. Taylor
40. A. M. Weinberg
41. G. C. Williams
42. H. I. Adler
43-192. N. G. Anderson
193. W. A. Arnold
194. R. H. Baum
195. M. A. Bender
196. F. J. Bollum
197. C. L. Burger
198. S. F. Carson
199. E. H. Y. Chu
200. G. B. Cline
201. W. E Cohn
202. C. C Congdon
203. F. J. de Serres
204. D. G. Doherty
205. J. L. Fairley
206. W. D. Fisher
207. A. H. Haber
208. A. Hollaender
209. S. Karasaki
210. M. A. Kastenbaum
211. R. F. Kimball
212. S. P. Leibo
213. D. L. Lindsley, Jr.
214. T. Makinodan
215. P. Mazur
216. G. D. Novelli
217. T. T. Odell, Jr.
218. G. M. Padilla
219. A. P. Pfuderer
220. M. L. Randolph
221. W. L. Russell
222. R. B. Setlow
223. G. E. Stapleton
224. A. C. Upton
225. E. Volkin
226. R. C. von Borstel
227-231. C. J. Whitmire, Jr.
232. S. Wolff
233. T. Yamada
234. E. F. Babelay
235. E. J. Barber
236. H. P. Barringer
237. J. C. Barton
238. A. S. Berman
239. H. A. Bernhardt
240. Barbara S. Bishop
241. H. D. Culpepper
242. J. T. Dalton
243-257. E. C. Evans
258. J. Farquharson
259. R. L. Farrar, Jr.

260. W. W. Harris
261-263. W. L. Harwell
264. E. T. Henson
265. A. P. Huber
266. G. R. Jamieson
267. E. C. Johnson
268. T. J. Lewis
269. E. F. Martin
270. J. R. Mahoney
271. L. L. McCauley
272. C. E. Nunley
273. P. R. Vanstrum
274. D. A. Waters
275. C. W. Weber
276. S. J. Wheatley
277. W. J. Wilcox, Jr.
278. E. Chargaff (consultant)
279. R. D. Hotchkiss (consultant)
280. Curt Stern (consultant)
281. M. M. Wintrobe (consultant)
282. P. C. Zamecnik (consultant)
283-284. Biology Library
285-287. Central Research Library
288. Laboratory Shift Supervisor
289. Reactor Division Library
290-291. ORNL – Y-12 Technical Library Document Reference Section
292-326. Laboratory Records Department
327. Laboratory Records, ORNL R.C.

EXTERNAL DISTRIBUTION

328. Justin Andrews, NIAID (Director), Bethesda, Maryland
329. R. W. McNamee, Union Carbide Corporation, New York
330. G. A. Andrews, ORINS
331. C. Baker, National Cancer Institute, Bethesda, Maryland
332. F. Baronowski, AEC Production Division, Washington, D.C.
333. N. F. Barr, Atomic Energy Commission, Washington, D.C.
334. N. Berlin, National Cancer Institute, Bethesda, Maryland
335. H. E. Bond, U.S. Naval Radiological Defense Laboratory, San Francisco, California
336. Myron Brakke, U.S. Department of Agriculture, Agriculture Research Service, Plant Physiol. Department, University of Nebraska, Lincoln 3, Nebraska
337. H. D. Bruner, Atomic Energy Commission, Washington, D.C.
338. W. R. Bryan, National Cancer Institute, Bethesda, Maryland
339. J. C. Bugher, Puerto Rico Nuclear Center, Rio Piedras, P.R.
340. W. W. Burr, Jr., Atomic Energy Commission, Washington, D.C.
341. R. M. Chanock, National Institute of Allergy and Infectious Diseases, Bethesda, Maryland
342. R. A. Charpie, Union Carbide Corporation, New York
343. M. A. Churchill, Chief, Stream Sanitation Staff, Edney Bldg., TVA, Chattanooga, Tennessee
344. W. D. Claus, Atomic Energy Commission, Washington, D.C.
345. Helen Coates, National Institute of Allergy and Infectious Diseases, Bethesda, Maryland
346. B. T. Cole, Department of Zoology, University of South Carolina, Columbia, S.C.
347. E. Dapper, U.S. Army Chemical Corps, Fort Detrick, Maryland
348. C. M. Davidson, Environmental Hygiene Branch, Edney Bldg., TVA, Chattanooga, Tennessee
349. W. W. Davis, Eli Lilly Co., Indianapolis, Indiana
350. O. M. Derryberry, Director of Health and Safety, Edney Bldg., TVA, Chattanooga, Tennessee
351. Harold S. Diehl, Sr., Vice President for Research in Medical Affairs, American Cancer Society, 521 W. 57th St., New York 19, New York
352. C. L. Dunham, Atomic Energy Commission, Washington, D.C.
353. K. M. Endicott, National Cancer Institute, Washington, D.C.
354. S. G. English, Assistant General Manager for Research and Development, AEC, Washington, D.C.
355. J. L. Fahey, National Cancer Institute, Bethesda, Maryland
356. E. Frei, National Cancer Institute, Bethesda, Maryland

357. F. E. Gartrell, Assistant Director of Health and Safety, Edney Bldg., TVA, Chattanooga, Tennessee.
358. H. Bentley Glass, Johns Hopkins University, Baltimore Maryland
359. Donald A. Glaser, Virus Lab., U. of Calif., Berkeley 5, Calif.
360. H. N. Glassman, U.S. Army Chemical Corps, Fort Detrick, Maryland
361. E. Grabowski, AEC Production Division, Washington, D.C.
362. S. T. Grey, Food and Drug Administration, Washington, D.C.
363. N. S. Hall, University of Tennessee, Knoxville
364. John Harris, AEC Public Relations Division, ORO
365. Fred J. Hodges, University of Michigan, Medical Center, Ann Arbor
366. E. C. Horn, Department of Zoology, Duke University, Durham, N.C.
367. J. G. Horsfall, Connecticut Agricultural Experimental Station, New Haven
368. R. D. Housewright, U.S. Army Chemical Corps, Fort Detrick, Maryland
369. R. J. Huebner, National Cancer Institute, Bethesda, Maryland
370. J. S. Kirby-Smith, Atomic Energy Commission, Washington, D.C.
371. R. M. Kniseley, ORINS Medical Division
372. K. W. Kohn, National Cancer Institute, Bethesda, Maryland
373. P. Kotin, National Cancer Institute, Bethesda, Maryland
374. E. L. Kuff, National Cancer Institute, Bethesda, Maryland
375. W. T. Lammers, Davidson College, Davidson, N.C.
376. A. D. Langmuir, Chief, Epidemiology Branch, Communicable Disease Center, Atlanta, Georgia
377. R. E. Learmouth, National Cancer Institute, Bethesda, Maryland
378. J. L. Liverman, Atomic Energy Commission, Washington, D.C.
379. R. F. Loeb, College of Physicians and Surgeons, Columbia University, New York
380. W. H. Magruder, National Cancer Institute, Bethesda, Maryland
381. W. E. McMahon, Atomic Energy Commission, ORO
382. R. G. Meader, National Cancer Institute, Bethesda, Maryland
383. J. L. Melnick, Department of Virology and Epidemiology, Baylor University, College of Medicine, Houston, Texas
384. G. R. Mider, National Cancer Institute, Bethesda, Maryland
385. Carl V. Moore, Washington University, St. Louis, Missouri
386. P. T. Mora, National Cancer Institute, Bethesda, Maryland
387. J. E. Moynahan, National Institutes of Health, Bethesda, Maryland
388. M. A. Mufson, National Institute of Allergy and Infectious Diseases, Bethesda, Maryland
389. W. G. Pollard, ORINS
390. C. A. Price, Department of Plant Physiol., Rutgers, The State University, New Brunswick, N.J.
391. R. Quimby, National Aeronautics and Space Administration, Washington, D.C.
392. H. M. Roth, Research and Development Division, AEC, ORO
393. W. P. Rowe, National Institute of Allergy and Infectious Diseases, Bethesda, Maryland
394. P. S. Sarma, National Institute of Allergy and Infectious Diseases, Bethesda, Maryland
395. John Schacter, Union Carbide Corporation, New York
396. D. G. Sharp, University of North Carolina, Department of Biophysics, Chapel Hill
397. Byron T. Shaw, Administrator, Agricultural Research Service, U.S. Department of Agriculture, Washington, D.C.
398. C. S. Shoup, Atomic Energy Commission, Oak Ridge
399. R. G. Smith, Food and Drug Administration, Washington, D.C.
400. H. A. Sober, National Cancer Institute, Bethesda, Maryland
401. Sol Spiegleman, Department of Microbiology, University of Illinois, Urbana
402. W. M. Stanley, Virus Laboratory, University of California, Berkeley
403. S. R. Tipton, Department of Zoology, University of Tennessee, Knoxville
404. John Totter, Atomic Energy Commission, Washington, D.C.
405. Rodes Trautman, Plum Island Lab., USDA, Greenport, L.I., New York

406. Shields Warren, New England Deaconess Hospital, Boston, Massachusetts
407. A. G. Wedum, U.S. Army Chemical Corps, Fort Detrick, Maryland
408. J. White National Cancer Institute, Bethesda, Maryland
409. H. G. Wood, Western Reserve University, Cleveland, Ohio
410. M. Zelle, Argonne National Laboratory, Argonne, Illinois
411-415. C. G. Zubrod, National Cancer Institute, Bethesda, Maryland
416. Atomic Energy Commission, Washington, D.C.
417. General Electric Company, Richland, Washington
418. New York Operations Office
419. AEC Patent Branch, Washington, D.C.
420-424. Division of Technical Information Extension, Oak Ridge
425. UCLA Medical Research Laboratory
426. Research and Development Division, AEC, ORO