OAK RIDGE NATIONAL LABORATORY LIBRARIES
3 4456 0549029 7

CENTRAL RESEARCH LIBRARY
DOCUMENT COLLECTION

OAK RIDGE NATIONAL LABORATORY
operated by
UNION CARBIDE CORPORATION
for the
U.S. ATOMIC ENERGY COMMISSION

ORNL-TM-885

COPY NO. - 28

DATE - May 13, 1964

METHODS OF ANALYSIS OF ELECTRICAL PERFORMANCE OF LONG CYLINDRICAL THERMIONIC DIODES

J. V. Wilson

ABSTRACT

The methods which have been used to analyze the electrical performance of long cylindrical thermionic diodes are described. The equivalent circuit, differential equations and corresponding difference equations are set forth. Computer programs for parameter studies of electrical performance for cases of both uniform and nonuniform input power (or temperature) are described.

CENTRAL RESEARCH LIBRARY
DOCUMENT COLLECTION
LIBRARY LOAN COPY
DO NOT TRANSFER TO ANOTHER PERSON
If you wish someone else to see this document, send in name with document and the library will arrange a loan.

NOTICE

This document contains information of a preliminary nature and was prepared primarily for internal use at the Oak Ridge National Laboratory. It is subject to revision or correction and therefore does not represent a final report. The information is not to be abstracted, reprinted or otherwise given public dissemination without the approval of the ORNL patent branch, Legal and Information Control Department.

LEGAL NOTICE

This report was prepared as an account of Government sponsored work. Neither the United States, nor the Commission, nor any person acting on behalf of the Commission:

A. Makes any warranty or representation, expressed or implied, with respect to the accuracy, completeness, or usefulness of the information contained in this report, or that the use of any information, apparatus, method, or process disclosed in this report may not infringe privately owned rights; or

B. Assumes any liabilities with respect to the use of, or for damages resulting from the use of any information, apparatus, method, or process disclosed in this report.

As used in the above, "person acting on behalf of the Commission" includes any employee or contractor of the Commission, or employee of such contractor, to the extent that such employee or contractor of the Commission, or employee of such contractor prepares, disseminates, or provides access to, any information pursuant to his employment or contract with the Commission, or his employment with such contractor.

CONTENTS

	Page
Purpose	5
Assumptions	5
Equivalent Circuits	5
Relation to Other Analyses	8
Mathematical Formulation	8
Diode with Connections to Emitter and collector at Same End	8
Diode with Connections to Emitter and Collector at Opposite Ends	20

OAK RIDGE NATIONAL LABORATORY LIBRARIES

3 4456 0549029 7

ANALYSIS OF ELECTRICAL PERFORMANCE OF LONG CYLINDRICAL THERMIONIC DIODES

Purpose

The purpose of this memorandum is to describe methods which have been used to analyze the electrical performance of long (up to 6 in.) cylindrical thermionic diodes. It is visualized that the diodes would be heated from the center, either by nuclear fuel as in a reactor or by a hot liquid metal in a separate heat exchanger.

Assumptions

In these analyses it is assumed that (a) the cylindrical thermionic diodes are so long that there may be axial variations of temperature, voltage, current, power input, and power output; and (b) it is valid to apply at every point on the emitter of a long diode the measured values of pertinent parameters for the smaller test diodes reported in the literature; in other words, the over-all characteristics of small diodes apply to the individual points of long diodes.

Equivalent Circuits

A variety of published data show that the operating characteristics of thermionic diodes may be plotted to give results of the following type:

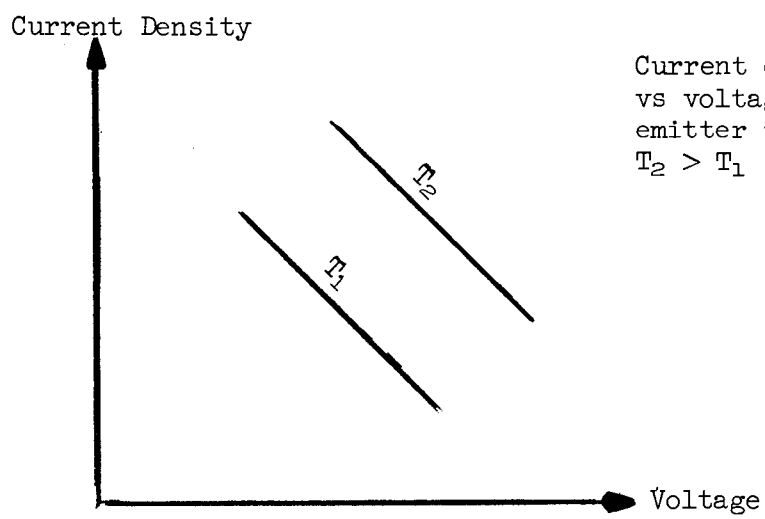

Current density (amps/cm^2) vs voltage for different emitter temperatures $T_2 > T_1$

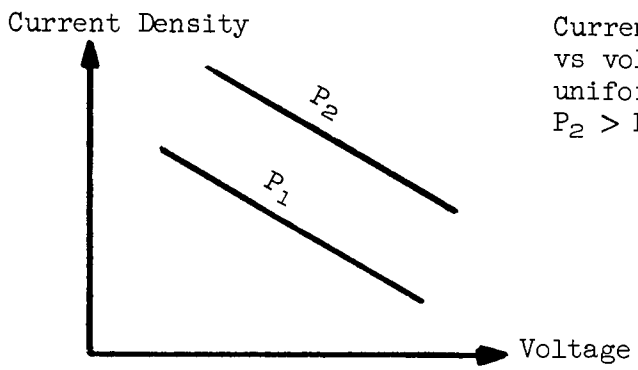

Current density (amps/cm^2) vs voltage for different uniform input powers $P_2 > P_1$

It is found experimentally that the curves are nearly straight in the range of practical interest, and that the lines for constant temperature fall more steeply than those for constant thermal input (as shown).

These characteristics are similar to those of a storage battery, or of a constant-voltage generator with internal resistance. Hence for a <u>point</u> thermionic diode the equivalent circuit is

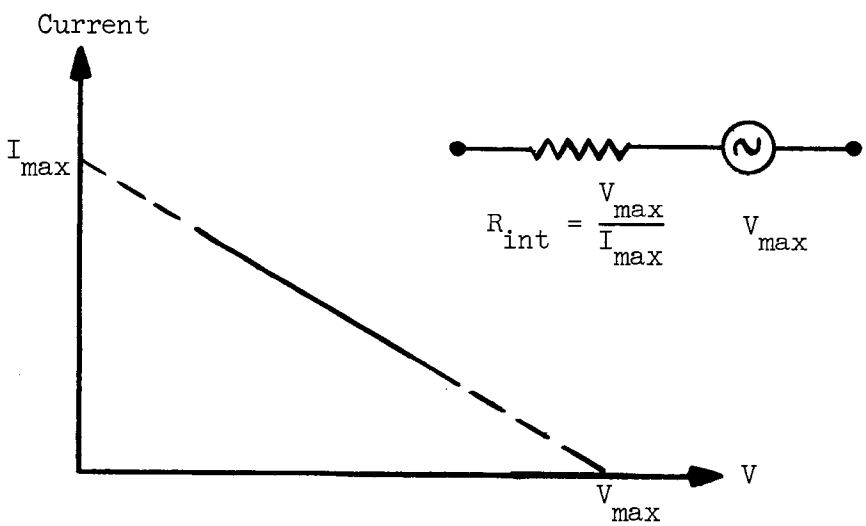

where I_{max} and V_{max} are the intercepts of the (extended) characteristic line.

For a long cylindrical thermionic diode the same model can be used, except that the collector and emitter resistances must be allowed for. Thus, the equivalent circuit for a sequence of thermionic diodes is

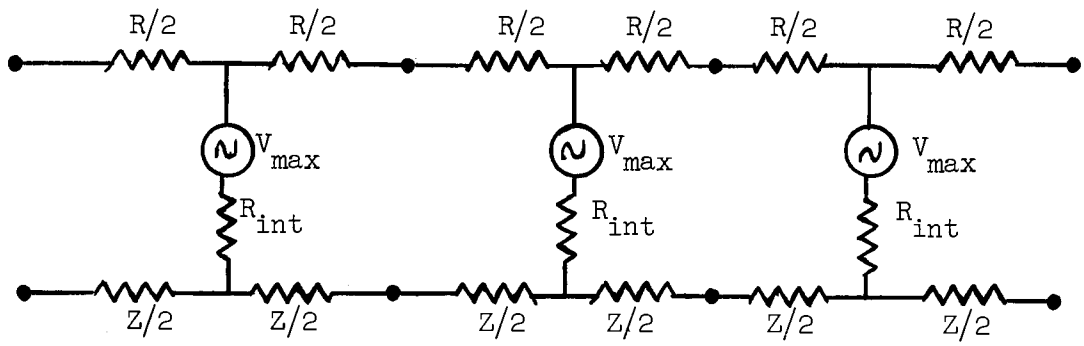

Obviously a long thermionic diode can be thought of as a sequence of elemental diodes, Δx long, each element having collector resistance $R\Delta x$, emitter resistance $Z\Delta x$, internal resistance $R_{int}/\Delta x$, and voltage V_{max}. These parameters (R, Z, R_{int}, V_{max}) may be functions of position. The temperature, power input per unit length, and current are hidden or implied variables in this model.

The analyses herein discussed are based then on the model of a long sequence of elements of the form

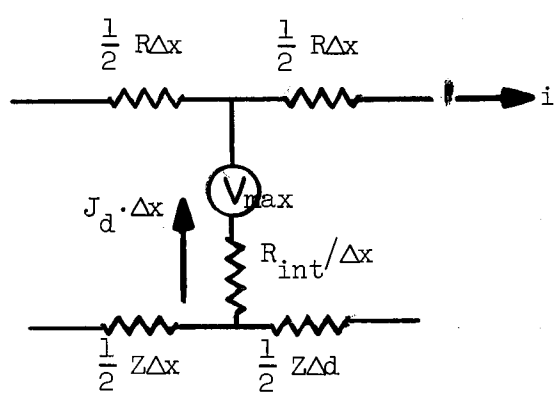

where

R, Z = ohms/cm,

V = volts,

R_{int} = ohms cm,

J_d = amps/cm^2,

i = amps.

It is important to note that the parameters V_{max} and R_{int} vary according to the type of characteristic used. The values for constant temperature will differ from those for constant voltage.

Relation to Other Analyses

A number of analyses have been published (for example, "A Digital Computer Code for the Analysis of Thermionic Networks," J. H. Broido et al., GA-4147, General Atomic, May 22, 1963. "Performance of Cesium Thermionic Diodes Operated in Series-Parallel Circuits," J. W. Holland, NAA-SR-7661, Atomics International, February 1, 1963. "Thermionic Converter Operation in Multiple Connection," G. Y. Eastman, A. Basiulis, and W. E. Harbough (RCA), Proc. Conf. Gatlinburg, October 1963, p. 348.) which use similar equivalent circuits for individual diodes to analyze the effect of series and parallel operation of thermionic diodes with different power inputs. These analyses were accompanied by experimental verification of the validity of the method. Up to the present, the writer has not found in the literature an article where the method was applied to the different parts of a long diode, nor any experimental justification for or refutation of such application.

However, if it is valid to assume that every point on a long diode acts as does the average point on a short diode under the same conditions, and if operation occurs only in the straight-line portion of the characteristic curve, the present analysis is justified. It is simply an extension of the analysis for a sequence of discrete diodes to the limiting case of a distributed, that is, continuous, diode. Since the assumption involved seems plausible, the analysis has proceeded on that basis.

Mathematical Formulation

1. Diode with connections to emitter and collector at same end. (Since current along emitter and collector flow in opposite directions, this may be called "opposite flow" case.)

The equivalent circuit is as above. The pertinent differential equations are

$$\frac{di}{dx} = \pi d_e \cdot \frac{J_{max}}{V_{max}}(V_{max} - V) \equiv A - BV \ ,$$

$$\frac{dV}{dx} = -i(R+Z) \ ,$$

where

J_{max} = intercept of characteristic curve along V = 0, amps/cm^2,
V_{max} = intercept of characteristic curve along J = 0, volts,
d_e = emitter diameter, cm,
i = current along diode, amps,
R,Z = resistance per unit length of emitter and collector, ohm-cm/cm^2 = ohms/cm,
R_L = load resistance, ohms.

Taking the origin x = 0 at the end of the diode inside the reactor, and taking x = L at the load end, the boundary conditions are

$$i(0) = 0 \ ,$$
$$V(L) = R_L \cdot i(L) \ .$$

Define for convenience

$A = \pi d_e \ J_{max}$, amps/cm,

$B = A/V_{max}$, mho/cm,

$k = \sqrt{B(R+Z)}$, cm^{-1}.

(a) Operation along straight-line characteristic, for example, constant input power or constant emitter temperature.

Then A, B, R, and Z are taken to be constants and the solution of the equations above is

$$V(x) = V(0) \cdot \cosh kx + V_{max}(1 - \cosh kx) \ ,$$

$$i(x) = \frac{A - B \cdot V(0)}{k} \sinh kx \ ,$$

and applying the boundary condition on V(L)

$$V(x) = V_{max} \left[1 - \frac{\cosh kx}{k \cosh kL + BR_L \sinh kL} \right] ,$$

$$i(x) = \frac{A \sinh kx}{BR_L \sinh kL + k \cosh kL} ,$$

$$\text{Power to load} = V(L)\cdot i(L) = A^2 R_L [BR_L + k \coth kL]^{-2} .$$

When the load is so chosen as to maximize the load power,

$$P_{max} = \frac{A^2}{4Bk} \tanh kL ,$$

$$R_{\substack{load,max \\ power}} = \frac{k}{B} \coth kL ,$$

$$V_{load} = \frac{1}{2} V_{max} ,$$

$$i_{load} = \frac{A}{2k} \tanh kL ,$$

$$\text{Electrical efficiency} = \frac{2}{3 - 2kL \cosh(2kL)} ,$$

$$\text{Thermal efficiency} = \frac{P_{max}}{L\cdot Q_{in}} ,$$

where Q_{in} = input thermal power per unit length, w/cm.

A short Fortran program has been written to evaluate the above expressions quickly for great numbers of cases for survey purposes. It runs very quickly; on the IBM-7090 about 2500 individual cases can be calculated per minute.

A Fortran listing of the program, and a sample output, are given below. The program is intended to run for a sequence of equally spaced emitter thicknesses, collector thicknesses, and diode lengths. Thus for example, the initial diode length, the amount to change diode length for each step, and the number of steps, are inputs.

Inputs to the program are:

<u>Card 1</u>. Format (7E10.3)

Field 1. C_{max} – intercept of characteristic on J_{axis}, amps/cm^2.

Field 2. V_{max} – intercept of characteristic on V_{axis}, volts.

Field 3. Emitter outer diameter, in.

AMPS/SQ CM	VOLTS	O.D. (IN)	RESISTIVITY	(OHM-CM)	(IN)	OPPOSITE FLOW
21.19999981	0.5900000	0.59999999	0.00004800	0.00001249	0.01000000	

DIODE LENGTH (IN)	EMITTER THICKNESS(IN)	COLLECTOR THICKNESS(IN)	MAX POWER TO LOAD(WATTS)	LOAD AMPS FOR MAX PWR	LOAD OHMS FOR MAX PWR	WATTS PER SQ CM OF EMITTER	MAXIMUM VOLTS
6.000	0.020	0.020	71.607	242.737	0.001215	0.981	0.565
6.000	0.020	0.030	74.018	250.907	0.001176	1.014	0.563
6.000	0.020	0.040	75.313	255.298	0.001156	1.032	0.561
6.000	0.020	0.050	76.121	258.038	0.001143	1.043	0.560
6.000	0.020	0.060	76.673	259.908	0.001135	1.051	0.560
6.000	0.020	0.070	77.073	261.265	0.001129	1.056	0.559
6.000	0.020	0.080	77.377	262.294	0.001125	1.060	0.559
6.000	0.020	0.090	77.614	263.100	0.001121	1.064	0.558
6.000	0.040	0.020	90.728	307.553	0.000959	1.243	0.541
6.000	0.040	0.030	95.616	324.122	0.000910	1.310	0.534
6.000	0.040	0.040	98.350	333.391	0.000885	1.348	0.530
6.000	0.040	0.050	100.096	339.310	0.000869	1.372	0.527
6.000	0.040	0.060	101.307	343.413	0.000859	1.388	0.525
6.000	0.040	0.070	102.195	346.423	0.000852	1.401	0.524
6.000	0.040	0.080	102.873	348.723	0.000846	1.410	0.523
6.000	0.040	0.090	103.408	350.535	0.000842	1.417	0.522
6.000	0.060	0.020	101.144	342.861	0.000860	1.386	0.525
6.000	0.060	0.030	107.875	365.680	0.000807	1.478	0.515
6.000	0.060	0.040	111.731	378.751	0.000779	1.531	0.509
6.000	0.060	0.050	114.229	387.217	0.000762	1.566	0.505
6.000	0.060	0.060	115.977	393.144	0.000750	1.589	0.502
6.000	0.060	0.070	117.268	397.520	0.000742	1.607	0.500
6.000	0.060	0.080	118.260	400.880	0.000736	1.621	0.498
6.000	0.060	0.090	119.044	403.540	0.000731	1.632	0.497
6.000	0.080	0.020	107.702	365.092	0.000808	1.476	0.515
6.000	0.080	0.030	115.790	392.507	0.000752	1.587	0.502
6.000	0.080	0.040	120.495	408.457	0.000722	1.651	0.494
6.000	0.080	0.050	123.572	418.887	0.000704	1.694	0.489
6.000	0.080	0.060	125.739	426.234	0.000692	1.723	0.485
6.000	0.080	0.070	127.347	431.684	0.000683	1.745	0.483
6.000	0.080	0.080	128.586	435.884	0.000677	1.762	0.480
6.000	0.080	0.090	129.569	439.217	0.000672	1.776	0.479
6.000	0.100	0.020	112.178	380.263	0.000776	1.537	0.508
6.000	0.100	0.030	121.281	411.122	0.000718	1.662	0.493
6.000	0.100	0.040	126.635	429.273	0.000687	1.736	0.484
6.000	0.100	0.050	130.160	441.220	0.000669	1.784	0.478
6.000	0.100	0.060	132.654	449.675	0.000656	1.818	0.473
6.000	0.100	0.070	134.510	455.967	0.000647	1.843	0.470
6.000	0.100	0.080	135.944	460.828	0.000640	1.863	0.468
6.000	0.100	0.090	137.084	464.693	0.000635	1.879	0.466
6.000	0.120	0.020	115.391	391.156	0.000754	1.581	0.503
6.000	0.120	0.030	125.271	424.647	0.000695	1.717	0.486
6.000	0.120	0.040	131.128	444.501	0.000664	1.797	0.476
6.000	0.120	0.050	135.002	457.635	0.000645	1.850	0.469
6.000	0.120	0.060	137.753	466.960	0.000632	1.888	0.464
6.000	0.120	0.070	139.805	473.916	0.000622	1.916	0.461
6.000	0.120	0.080	141.394	479.301	0.000615	1.938	0.458
6.000	0.120	0.090	142.659	483.588	0.000610	1.955	0.456

```
C 1000  PLASMA DIODE, CONSTANT EMITTER TEMP, OPPOSITE FLOW
    1 READ INPUT TAPE 10,2, CMAX,VMAX,DIAME,RHOE,RHOC,GAP,ELEN
      READ INPUT TAPE 10,2,THIKE,DTHE,XNE,THIKC,DTHC,XNC,DELE,XNL
      NE#XNE
      NC#XNC
      NL#XNL
      A#CMAX*DIAME*6.4516*3.1416
      B#A/VMAX
      SV1#THIKC
      SV2#THIKE
      DO 7 I#1,NL
      WRITE OUTPUT TAPE  9,10
      WRITE OUTPUT TAPE 9,3,CMAX,VMAX,DIAME,RHOE,RHOC,GAP
      WRITE OUTPUT TAPE 9,11
      THIKE#SV2
      DO 5 K#1,NE
      R#RHOE*0.12531/THIKE/(DIAME-THIKE)
      THIKC#SV1
      DO 6 J#1,NC
      DIAMC#DIAME+GAP+GAP+THIKC
      Z#RHOC*0.3937/(3.1416*DIAMC*THIKC)
      XK#SQRTF(B*(R+Z))
      X#ELEN*XK
      TANH#(EXPF(X+X)-1.0)/(1.0+EXPF(X+X))
      ROPT#XK/B/TANH
      COPT#0.5*VMAX/ROPT
      PMAX#COPT*COPT*ROPT
      EFF#A*(1.0-0.5*SQRTF(1.0-TANH*TANH))/B
      PPA#PMAX/(ELEN*6.4516*3.1416*DIAME)
      WRITE OUTPUT TAPE 9,4,ELEN,THIKE,THIKC,PMAX,COPT,ROPT,PPA,EFF
    6 THIKC#THIKC+DTHC
    5 THIKE#THIKE+DTHE
    7 ELEN#ELEN+DELE
    3 FORMAT(     6F15.8)
    2 FORMAT(7E10.3,E2.0)
    4 FORMAT(F10.3,4F15.3,F15.6,2F15.3)
      GO TO 1
   10 FORMAT(84H1  MAX DIODE       MAX DIODE        EMITTER          EMITTER
     1        COLLECTOR          GAP    /   85H   AMPS/SQ CM        VOLTS
     1\   O.D. (IN)        RESISTIVITY     (OHM-CM)          (IN)     ,10X,
     113HOPPOSITE FLOW  )
```

```
11 FORMAT(117H0DIODE LENGTH      EMITTER      COLLECTOR    MAX POWER TO  L042
  1TO     LOAD AMPS      LOAD OHMS    WATTS PER SQ      MAXIMUM     /     043
  1114H      (IN)      THICKNESS(IN)  THICKNESS(IN)   LOAD(WATTS)          044
  1FOR MAX PWR   FOR MAX PWR   CM OF EMITTER      VOLTS     )              045
   END                                                                      46
```

Field 4. Emitter resistivity, ohm-cm.

Field 5. Collector resistivity, ohm-cm.

Field 6. Gap width, emitter to collector, in.

Field 7. Initial value of diode length, in.

Card 2. Format (7E10.3, E2.0)

Field 1. Initial value of emitter thickness, in.

Field 2. Increment per step for emitter thickness, in.

Field 3. Number of steps for changing emitter thickness.

Field 4. Initial value of collector thickness, in.

Field 5. Increment per step for collector thickness, in.

Field 6. Number of steps for changing collector thickness, in.

Field 7. Increment per step for diode length.

Field 8. Number of steps for changing diode length.

It will be noted that mixed English and metric units are used. This mixture was found to be convenient, however, because of the data available.

(b) Operation other than along straight-line characteristic.

In this case A, B, R, Z in the basic equations need not be constant, and integration is much harder. For special types of variations of these quantities, the equations can be solved. However in order to represent actual reactor conditions we have preferred to handle these problems by digital computer, using the difference equations corresponding to the above differential equations; namely,

$$i_n = i_{n-1} + \Delta x(V_{max,n} - V_{n-1}) \cdot \left\{ \pi d_e / R_{int,n} \right\} ,$$

$$V_n = V_{n-1} - \frac{i_n + i_{n-1}}{2} (R_n + Z_n) .$$

Since the maximum voltage V_{max}, internal resistance of the diode R_{int}, and collector and emitter resistances/length, Z and R, vary slowly with position, this formulation is considered adequate.

For each different diode, empirical formulas are used to calculate V_{max} and R_{int}. These are contained in a characteristic subroutine (CHAR). For different diodes different formulas must be inserted into the subroutine.

Two different versions of this program have been used, one with origin x = 0 at the load; the other with x = 0 at other end of the diode. In the former, the user must supply the desired output current; in the latter, the user must supply the voltage and input power density (or temperature, two of these three are independent) at the end of the diode away from the load. As the latter version has proved to be far the more useful, it alone is described here.

A Fortran listing of the program, and of subroutine CHAR, are given below. This program, like the one described above, is intended to run for a sequence of equally spaced emitter thicknesses, collector thicknesses, and diode lengths; moreover, it runs for a sequence of voltages at the inward end. Inputs to the program are:

Card 1. Format (A6, 4X, 6E10.3)

Field 1. Name of tube, 1 to 6 letters, cols. 1-6. Cols. 7-10 blank.

Field 2. Emitter outer diameter, in.

Field 3. Gap, in.

Field 4. Input thermal power, watts/cm^2 of emitter. (See card 4)

Field 5. Number of spatial divisions along axis.

Field 6. Constant ρ_{E1} for expressing emitter resistivity.

Field 7. Constant ρ_{E2} for expressing emitter resistivity. Emitter resistivity (ohm-cm) = $\rho_{E1} + \rho_{E2}$ T, where T is emitter temperature in °Kelvin.

Card 2. Format (7E10.3)

Field 1. Initial value of emitter thickness, in.

Field 2. Increment per step for emitter thickness.

Field 3. Number of steps for changing emitter thickness.

Field 4. Initial value of collector thickness, in.

Field 5. Increment per step for collector thickness.

Field 6. Number of steps for changing collector thickness.

Field 7. Collector resistivity, ohm-cm.

Card 3. Format (7E10.3)

Field 1. Initial value of diode length per space division, in. This is the diode length in inches divided by the number in field 5 of card 1.

```
C 1005  PLASMA DIODE OPPOSED FLOW ZERO AT CTR,CHARACERISTICS SUBROUTINE
C       ZERO POSITION IS TOWARD REACTOR CENTER
        DIMENSION PM(200)
      1 READ INPUT TAPE 10,7,TUBE,DIAME,GAP,PUN,EXNP,RHOE1,RHOE2
      7 FORMAT(A6,4X,6F10.3)
        READ INPUTTAPE 10,2,THIKE,ETHE,XNTHE,THIKC,DTHC,XNTHC,RHOC
        READ INPUT TAPE 10,2,DX,DDX,XNX,VI,DVI,XNVI
        NP#EXNP
        CSV#THIKC
        DXSV#DX
        VISV#VI
        READ INPUT TAPE 10,2,(PM(I),I#1,NP)
      2 FORMAT(7F10.3)
        SUM#0.
        DO 6 J#1,NP
      6 SUM#SUM+PM(J)
        NTHE#XNTHE
        NTHC#XNTHC
        NX#XNX
        NVI#XNVI
        EN#20.2683*DIAME
        DO 23 I#1,NTHE
        R#      0.12531/THIKE/(DIAME-THIKE)
        THIKC#CSV
        DO 22 K#1,NTHC
        WRITE OUTPUT TAPE 9,88,TUBE,DIAME,PUN
     88 FORMAT(1H1,A6,40H DIODE CHARACTERISTICS      EMITTER O.D. ,F5.3,
       129H INCHES, INPUT THERMAL POWER ,F7.3,7H W/SQCM //)
        WRITE OUTPUT TAPE 9,11
     11 FORMAT(119H EMIT THIKN COLL THIKN  CTR VOLTS   MAX TEM(C)  LENGTH
       1 LOAD AMPS LOAD VOLTS LOAD WATTS   ELEC EFF WATTS/SQCM THERM EFF/)
        DIAMC#DIAME+GAP+GAP+THIKC
        Z#RHOC*0.3937/(3.1416*DIAMC*THIKC)
        DX#DXSV
        DO 21 M#1,NX
        THPW#SUM*PUN*DX*EN
        EMO#0.5*DX*(Z+R*RHOE1)
        EMM#DX*R*RHOE2
        VI#VISV
        DO 20 N#1,NVI
        X#0.
```

```
      CO#0.
      PGEN#0.
      VO#VI
      DO 3 J#1,NP
      T#PM(J)*PUN
      CALL CHAR(T,VO,TO,CD,TUBE)
      G#CO+DX*CD*EN
      EM#EMO+EMM*TO
      V#VO-EM*(C+CO)
      PGEN#PGEN+0.5*(C-CO)*(V+VO)
      X#X+DX
       IF(J-1) 9,9,8
    9 TMAX#TO-273.
    8 CO#C
      VO#V
    3 CONTINUE
      PL#V*C
      EFF#PL/PGEN
      WCM#PL/X/EN
      TEF#PL/THPW
      WRITE OUTPUT TAPE 9,24,THIKE,THIKC,VI,TMAX,X,C,V,PL,EFF,WCM,TEF
   20 VI#VI+DVI
   21 DX#DX+DDX
   22 THIKC#THIKC+DTHC
   23  THIKE#THIKE+DTHE
   24 FORMAT(F10.3,10F11.3)
    4 GO TO 1
      END
      SUBROUTINE CHAR(T,VO,TO,CD,TUBE)
B     X#512321606060                                          RCA
      IF(X-TUBE) 2,1,2
    1 VW#60.*T-1400.
      VMAX#1.35+.00125*VW*(1.-.005*(.17*ABSF(VW)-.02*VW))
      CD#5.767*(VMAX-VO)
      TO#1133.+35.*CD+590.*VO
      GO TO 10
B   2 X#213160606060                                          AI
      IF(X-TUBE) 3,4,3
    4 VMAX#.0389*T
```

```
      CD#6.40*(VMAX-VO)
      TO#1673. +4000.*VO/(14.-CD)
B   3 X#632523462725                                    TECOGE83
      IF(X-TUBE) 10,5,10
    5 VMAX#1.0+.019*T
      IF(T-44.) 6,6,7
    6 CD#(VMAX-VO)*(3.24+0.129*T)
      GO TO 8
    7 CD#3.8*(VMAX-VO)
    8 TO#774.*VO+28.2*CD+1147.
   10 RETURN
      END
```

Field 2. Increment per step for length/division.

Field 3. Number of steps for changing length/division.

Field 4. Initial value of voltage at reactor-center end of diode.

Field 5. Voltage increment per step.

Field 6. Number of steps for changing center voltage.

Card(s) 4. Format (7E10.3). As many cards as needed; total number of entries is number in field 5 of card 1.

Input power distribution starting from reactor center and proceeding outward. The normalization should be such that the product of the entry in field 4 of card 1 by the entries on card 4 should give the thermal input watts/cm^2 at corresponding points in the reactor.

In the program certain approximations have been made; they are described briefly below.

a) Emitter resistivity. The resistivity of the emitter has been described by a relation

$$\rho_E = a + b\,T\ ,$$

where T = temperature (°K) and a and b are constants. For tungsten a = 6.4×10^{-6} ohm-cm and b = 1.4×10^{-8} ohm-cm/°K.

b) Maximum voltage and current density. By extending the straight portion of the voltage vs current density (V vs J) characteristics until the extension reached the axes, a set of values of V_{max} and J_{max} were determined. These were expressed empirically in terms of the input power, and the resulting expressions were incorporated into the program subroutine (CHAR) which represents the diode characteristics.

c) Emitter temperature. Emitter temperature is expressed by a relation of the form

$$\text{Temp} = aV + bJ + c\ ,$$

where a, b, and c are constants. This relation is satisfactory over only a limited range of voltage and current density values. Consequently, what has been done is (a) pick three pairs of V,J values which more or less span the range of interest; (b) from the characteristic curves read off the temperature for the values in (a); then (c) set up three simultaneous equations of the above form using known values of temperature,

voltage, and current density and solve them for the parameters a, b, and c; and finally (d) use the values a, b, and c thus determined in the above equation which is then applied over the entire region of interest. Since the loci of constant temperature approximate equidistant parallel lines, and since the range of interest is not too large, and since temperature enters only in calculating emitter resistivity, this degree of approximation is considered adequate.

As an example, for the RCA diode, in the region

$$3 \text{ amps/cm}^2 < J < 5 \text{ amps/cm}^2$$

$$0.8 \text{ volts} < V < 1.1 \text{ volts}$$

we find

$$T(°K) = 1133 + 35\ J + 590\ V\ .$$

Here T is in the range of 1450°C to 1640°C.

2. <u>Diode with connections to emitter and collector at opposite ends</u>. ("Parallel flow" case)

The equivalent circuit is as above. However the emitter and collector currents must be considered separately. The pertinent differential equations are:

Let

emitter axial current = i	voltage = V	resistance/length = R
collector axial current = j	voltage = E	resistance/length = Z

Then, using the same symbols as in part 1,

$$\frac{di}{dx} = -\frac{dj}{dx} = A - B(V-E)\ ,$$

$$\frac{dV}{dx} = -\ iR\ ,$$

$$\frac{dE}{dx} = -\ jZ\ ,$$

and the boundary conditions are

$$i(L) = j(0)\ ,$$

$$V(L) - E(0) = i(L)\cdot R_L\ ,$$

$$i(0) = j(L) = 0\ .$$

The solution of these equations is more complicated than the previous case.

(a) Operation along straight-line characteristic.

The final results are as follows when the parameters A, B, R and Z are taken to be constants:

$$j(x) = j(0)\left[1 + \frac{BZ}{k^2}(\cosh kx - 1)\right] - \frac{A - BP}{k}\sinh kx ,$$

$$i(x) = j(0) - j(x) ,$$

$$V(x) = V(0) + j(0)\frac{BZR}{k^3}(\sinh kx - kx) - R\frac{A - BP}{k^2}(\cosh kx - 1) ,$$

$$E(x) = E(0) - \frac{Z}{R}[V(x) - V(0)] - j(0)\, Z\, x ,$$

where

$$P \equiv V(0) - E(0)$$

and

$$j(0) = \frac{\frac{A}{k}\sinh kL}{\left\{\left[1 + \frac{BZ}{k^2}(\cosh kL - 1)\right]\left[1 + \frac{BR}{k^2}(\cosh kL - 1)\right] + \left[R_{load} - \frac{BZR}{k^3}(\sinh kL - kL)\right]\left(\frac{B}{k}\sinh kL\right)\right\}} ,$$

$$P = \frac{A}{B} - j(0)\frac{k}{B}(\operatorname{csch} kL)\left[1 + \frac{BZ}{k^2}(\cosh kL - 1)\right] .$$

When, in addition, the load is optimized for maximum output power, we have the further results:

$$R_L = \frac{k}{B}\coth kL + \frac{BZR}{k^3}\left[kL - 2\tanh\frac{kL}{2}\right] ,$$

$$\text{Load current} = \frac{1}{2}\,\frac{V_{max}}{R_L}\,,$$

$$\text{Load voltage} = \frac{1}{2}\,V_{max}\,,$$

$$\text{Power to load} = \frac{1}{4}\,\frac{V_{max}}{R_L}\,,$$

$$\text{Thermal efficiency} = \frac{\text{Power to load}}{\text{Length} \times (\text{thermal input power per unit length})}\,,$$

where $k^2 = B(R+Z)$ and L = diode length.

A similar program to that in 1(a) above has been written to survey a variety of possible diodes operated with connections to emitter and collector at opposite ends. The input is exactly the same as for the program in 1(a); a listing of the program follows.

(b) Operation other than along straight-line characteristic.

This case can be handled by difference equations as was done above in 1(b). A digital computer program for this has been written and is available from the writer. This problem was also programmed for the EAI type TR-10 analog computer (actually as a test for a newly received machine). The analog solution verifies the digital one, and when the solution is displayed on a scope gives a good representation of the variation of voltage and current along the diode. However in general the digital program output is more convenient to use. Since the only practical application of parallel flow studied to date has been the case of a heat exchanger external to the reactor wherein the emitter is isothermal and falls under (a) above, these latter programs have not proved to be very useful in practice, and further discussion or description is omitted.

```
C 0401  PLASMA DIODE, CONSTANT EMITTER TEMP, PARALLEL FLOW
    1 READ INPUT TAPE 10,2, CMAX,VMAX,DIAME,RHOE,RHOC,GAP,ELEN
      READ INPUT TAPE 10,2,THIKE,DTHE,XNE,THIKC,DTHC,XNC,DELE,XNL
      NE#XNE
      NC#XNC
      NL#XNL
      A#CMAX*DIAME*6.4516*3.1416
      B#A/VMAX
      SV1#THIKC
      SV2#THIKE
      DO 7 I#1,NL
      WRITE OUTPUT TAPE  9,10
      WRITE OUTPUT TAPE 9,3,CMAX,VMAX,DIAME,RHOE,RHOC,GAP
      WRITE OUTPUT TAPE 9,11
      THIKE#SV2
      DO 5 K#1,NE
      R#RHOE*0.12531/THIKE/(DIAME-THIKE)
      THIKC#SV1
      DO 6 J#1,NC
      DIAMC#DIAME+GAP+GAP+THIKC
      Z#RHOC*0.3937/(3.1416*DIAMC*THIKC)
      XK#SQRTF(B*(R+Z))
      X#ELEN*XK
      Y#XK/B
      W#Z*R/XK/XK
      ROPT#(1.0+EXPF(X+X))/(EXPF(X+X)-1.0)*Y+
     1W/Y*(X-2.0*(EXPF(X)-1.0)/(1.0+EXPF(X)))
      COPT#0.5*VMAX/ROPT
      COH#0.5*(EXPF(X)+EXPF(-X))
      VO#COPT/XK/COH/TANHF(X)
      VL#VMAX-VO*(R+Z*COH)
      VO#VMAX-VO*(Z+R*COH)
      VM#VMAX-SQRTF((VO-VMAX)*(VO-VMAX)+Z*Z*COPT*COPT/XK/XK)
      PMAX#0.5*VMAX*COPT
      PPA#PMAX/(ELEN*6.4516*3.1416*DIAME)
      WRITE OUTPUT TAPE 9,4,ELEN,THIKE,THIKC,PMAX,COPT,ROPT,PPA,VO,VM,VL
    6 THIKC#THIKC+DTHC
    5 THIKE#THIKE+DTHE
    7 ELEN#ELEN+DELE
    2 FORMAT(7E10.3,F2.0)
    3 FORMAT(1H0,6F15.8)
```

```
 4 FORMAT(F10.3,4F15.3,F15.6, F14.3,3F7.3)                                  042
   GO TO 1                                                                   43
10 FORMAT(84H1  MAX DIODE      MAX DIODE       EMITTER        EMITTER       044
  1        COLLECTOR          GAP   /   85H   AMPS/SQ CM       VOLTS         045
  1    O.D. (IN)        RESISTIVITY    (OHM-CM)          (IN)    ,10X,       046
  113HPARALLEL FLOW  )                                                       47
11 FORMAT(117H0DIODE LENGTH      EMITTER      COLLECTOR    MAX POWER TO T 048
  1TO     LOAD AMPS      LOAD OHMS   WATTS/SQ CM     VOLTAGES       /       049
  111SH      (IN)      THICKNESS(IN)  THICKNESS(IN)   LOAD(WATTS)  FOR MAX050
  1FOR MAX PWR   FOR MAX PWR   EMITTER     X#0    MIN  X#L          )       051
   END                                                                      52
```

Internal Distribution

1. S. E. Beall
2. M. Bender
3. A. L. Boch
4. R. B. Briggs
5. A. P. Fraas
6. Wm. Fulkerson
7. M. I. Lundin
8. R. N. Lyon
9. H. G. MacPherson
10. H. C. McCurdy
11. A. J. Miller
12. A. M. Perry
13. M. W. Rosenthal
14. H. W. Savage
15. A. W. Savolainen
16. M. J. Skinner
17. O. L. Smith
18. I. Spiewak
19. J. A. Swartout
20. W. C. Thurber
21. D. B. Trauger
22. G. D. Whitman

23-27. J. V. Wilson
28-30. Central Research Library
31-32. Y-12 Document Reference Section
33-35. Laboratory Records Department
36. Laboratory Records Department, LRD-RC

External Distribution

37-51. Division of Technical Information Extension (DTIE)
52. Research and Development Division, ORO
53-54. Reactor Division, ORO