OAK RIDGE NATIONAL LABORATORY
operated by
UNION CARBIDE CORPORATION
for the
U. S. ATOMIC ENERGY COMMISSION

ORNL-TM-348

HRE-2 DESIGN MANUAL

R. H. Chapman

NOTICE

This document contains information of a preliminary nature and was prepared primarily for internal use at the Oak Ridge National Laboratory. It is subject to revision or correction and therefore does not represent a final report. The information is not to be abstracted, reprinted or otherwise given public dissemination without the approval of the ORNL patent branch, Legal and Information Control Department.

LEGAL NOTICE

This report was prepared as an account of Government sponsored work. Neither the United States, nor the Commission, nor any person acting on behalf of the Commission:

A. Makes any warranty or representation, expressed or implied, with respect to the accuracy, completeness, or usefulness of the information contained in this report, or that the use of any information, apparatus, method, or process disclosed in this report may not infringe privately owned rights; or

B. Assumes any liabilities with respect to the use of, or for damages resulting from the use of any information, apparatus, method, or process disclosed in this report.

As used in the above, "person acting on behalf of the Commission" includes any employee or contractor of the Commission, or employee of such contractor, to the extent that such employee or contractor of the Commission, or employee of such contractor prepares, disseminates, or provides access to, any information pursuant to his employment or contract with the Commission, or his employment with such contractor.

ORNL-TM-348

Contract No. W-7405-eng-26

REACTOR DIVISION

HRE-2 DESIGN REPORT

R. H. Chapman

MARCH 1964

OAK RIDGE NATIONAL LABORATORY
Oak Ridge, Tennessee
operated by
UNION CARBIDE CORPORATION
for the
U. S. ATOMIC ENERGY COMMISSION

PREFACE

The Homogeneous Reactor Experiment No. 2 (HRE-2) was designed, constructed, and operated at Oak Ridge National Laboratory during the period 1956–1961, at which time the program was terminated. Although the design details of the reactor have been available in the form of individual reports and memoranda, a comprehensive description has not been published previously. It is the purpose of this Design Report to describe the reactor (often referred to in the literature as HRT) in detail in a single issue and to provide a convenient reference to the many reports pertaining to the design of the reactor.

The description of the reactor is limited to that existing before operation commenced. In a few instances where design improvements were required as a result of operation, the improvements are noted and described parenthetically. Detailed calculational procedures have been referenced; only the pertinent results are reported herein. Simplified report drawings and schematic representations have been used insofar as available to described the equipment and layouts. In a few cases where such drawings were not available, regular engineering drawings have been used to show details of construction.

In compiling the extensive bibliography of pertinent reports, only those dealing with the design and development of components have, in general, been included. The results of preoperational testing and reactor operation have been excluded as being outside the scope of this report. An effort was made to include all references pertaining to the design. Each chapter is complete with its own list of references, although this involves some repetition. The list of references contained herein and in another compilation (see ref 13 of chap. 1) constitute an essentially complete bibliography of the HRE-2.

The report has been organized according to a detailed outline for which the author is indebted to C. L. Segaser. Sincere appreciation is expressed to R. B. Briggs and I. Spiewak for their helpful comments and review of the entire report and to S. E. Beall, A. M. Billings, P. N. Haubenreich, P. R. Kasten, and R. L. Moore for reviewing certain portions of the report.

R. H. Chapman

Contents

1. OBJECTIVES AND BRIEF DESCRIPTION OF HRE-2 1
   - 1.1 Introduction 1
   - 1.2 Objectives 1
   - 1.3 Design Bases 2
   - 1.4 General Description of HRE-2 4
   - 1.5 Location of HRE-2 8
   - 1.6 Availability of Utilities 12

2. HRE-2 PROCESS DESIGN 15
   - 2.1 System Flowsheets 15
   - 2.2 Process Design Data 17
   - 2.3 Reactor High-Pressure Systems 20
     - 2.3.1 Fuel High-Pressure System 20
     - 2.3.2 Blanket High-Pressure System 23
   - 2.4 Reactor Low-Pressure Systems 23
     - 2.4.1 Fuel Low-Pressure System 23
     - 2.4.2 Blanket Low-Pressure System 27
   - 2.5 Water Cooling Systems 27
     - 2.5.1 General 27
     - 2.5.2 Demineralized-Water System 28
     - 2.5.3 Potable-Water System 33
   - 2.6 Reactor Steam System 34
   - 2.7 Waste and Vent Systems 37
   - 2.8 Refrigeration System 41
   - 2.9 Steam and Condensate Service Systems 42
   - 2.10 Leak Detector System 45

3. COMPONENT DESIGN 51
   - 3.1 Introduction 51
   - 3.2 Core Tank 51
     - 3.2.1 Introduction 51
     - 3.2.2 Core Tank Description 51
     - 3.2.3 Core Tank Material 53
     - 3.2.4 Core Hydrodynamics 55
     - 3.2.5 Core Wall Temperature 58
     - 3.2.6 Allowable Core Tank Pressure Differential 59
   - 3.3 Reactor Pressure Vessel and Blast Shield 61
     - 3.3.1 General Description 61
     - 3.3.2 Heat Production in Vessel Wall 66
     - 3.3.3 Pressure Vessel Stress Analysis 66
     - 3.3.4 Reactor Vessel Blast Shield 73
     - 3.3.5 Core and Blanket Corrosion Specimen Holders 77

3.4 Fuel and Blanket Pressurizers and Auxiliaries 80
3.4.1 Introduction 80
3.4.2 Pressurizer Design Criteria 80
3.4.3 Design Basis for Pressurizer Volume 80
3.4.4 Early Pressurizer Design Studies and Tests 82
3.4.5 Modified Pressurizer Design 83
3.4.6 Pressurizer Auxiliaries 84
3.5 Fuel and Blanket Primary Heat Exchangers 88
3.5.1 General Description 88
3.5.2 Design Bases 90
3.5.3 Tubesheet and Header Design 95
3.5.4 Thermal Cycle Tests 97
3.5.5 Inspection of Heat-Exchanger Tubing 100
3.5.6 Heat-Exchanger Blast Shield 100
3.5.7 Heat-Exchanger-Related Studies 102
3.6 Fuel and Blanket Circulating Pumps 103
3.6.1 Introduction 103
3.6.2 Pump Description 103
3.6.3 Design Data 106
3.6.4 Materials 107
3.6.5 Pump-Related Design and Development Investigations 108
3.7 Fuel and Blanket Gas Separators 112
3.7.1 Introduction 112
3.7.2 Description 112
3.7.3 Design Data 113
3.8 High- to Low-Pressure Transition Components 115
3.8.1 Introduction 115
3.8.2 Fuel and Blanket Letdown Heat Exchangers 115
3.8.3 Diaphragm-Type Feed and Purge Pumps 120
3.8.4 Process-Line Heaters and Coolers 138
3.9 Fuel and Blanket Low-Pressure System Unit Assemblies 141
3.9.1 Introduction 141
3.9.2 Fuel and Blanket Dump Tanks, Evaporators, and Entrainment Separators 143
3.9.3 Fuel Iodine Removal Bed 149
3.9.4 Fuel and Blanket Recombiners 151
3.9.5 Fuel and Blanket Recombiner-Condensers 155
3.9.6 Fuel and Blanket Cold Traps 157
3.10 Fuel and Blanket Storage Facilities 160
3.10.1 Introduction 160
3.10.2 Fuel and Blanket Storage Tanks and Evaporators 161
3.10.3 Reflux Condensers 161
3.10.4 Fuel-Storage-Tank Recombiner 161
3.11 Waste and Vent System Components 165
3.11.1 Introduction 165
3.11.2 Reactor Off-Gas Components 165
3.11.3 Liquid Waste Components 169
3.11.4 Cell-Spray and Scavenging System 169
3.12 Reactor Steam System Components 172
3.12.1 Description 172
3.12.2 Fuel and Blanket Steam Drums 172

3.12.3 Turbine-Generator Condenser 173
3.12.4 Air-Cooled Condenser 173
3.12.5 Deaerator and Feedwater Storage Tank 173
3.12.6 Feedwater Pumps 175
3.12.7 Package Boiler 176
3.13 Reactor Cooling-Water-System Components 177
3.13.1 Description 177
3.13.2 Water-Coolant Circulating Pumps 177
3.13.3 Water-Coolant Heat Exchangers 178
3.13.4 Cooling Tower 178
3.13.5 Space Coolers 179
3.14 Refrigeration-System Components 179
3.15 Oxygen Addition System 183
3.16 Samplers 184
3.16.1 Fuel and Blanket Samplers 184
3.16.2 Cell Air Monitoring 184
3.16.3 Steam-System Sampling 186

4. REACTOR CONTAINMENT CELL AND SHIELD DESIGN 201

4.1 Container Design 201
4.1.1 Design Requirements 201
4.1.2 Design Pressure 201
4.1.3 Description 203
4.2 Radiation Shielding 207
4.2.1 General Design 207
4.2.2 Reactor Thermal Shield 208
4.2.3 Special Shielding Considerations 211

5. EQUIPMENT LAYOUTS, PIPING DESIGN, AND MAINTENANCE 215

5.1 Equipment Layouts 215
5.2 Piping Design 223
5.3 Maintenance 228

6. REACTOR PHYSICS, SAFETY, STABILITY, AND HAZARDS 241

6.1 Introduction 241
6.2 Physics 241
6.3 Safety 255
6.4 Stability 260
6.5 Hazards 266

7. CHEMICAL TECHNOLOGY OF FUEL SOLUTION 275

7.1 Introduction 275
7.2 Solubility of Uranyl Sulfate Solutions 275
7.3 Radiation Effects 276
7.4 Recombination 281
7.5 Physical Properties 283
7.6 HRE-2 Chemical Plant 283

8. INSTRUMENTATION, CONTROLS, AND ELECTRICAL SYSTEM 291

8.1 Introduction 291
8.2 Design Considerations 292
8.3 Control-Room Layout 294

8.4 Nuclear Instrumentation 297
8.5 Process Instrumentation 299
8.6 Valves 309
8.7 Inventory Measurement 315
8.8 Controls and Interlocks 315
8.9 Electrical System 317

9. HRE-2 COST ANALYSIS 325

9.1 Introduction 325
9.2 Containment Cost 325
9.3 Reactor Core, Pressure Vessel, and Blast Shield 326
9.4 Heat Exchanger Costs 327
9.5 Pump Costs 327
9.6 Typical Vessel Costs 328
9.7 Piping Costs 328

10. APPENDIX 329

1. Objectives and Brief Description of HRE-2

1.1 INTRODUCTION

The Homogeneous Reactor Experiment No. 2 (HRE-2), usually referred to in the project literature as the Homogeneous Reactor Test (HRT), is the second experimental aqueous homogeneous reactor to be constructed under the program of the United States Atomic Energy Commission for the evaluation of nuclear power reactors. The first aqueous reactor in this program, the Homogeneous Reactor Experiment No. 1 (HRE-1), was constructed in 1951, achieved criticality on April 15, 1952, and successfully operated at heat power levels up to design conditions of 1000 kw (a brief period of operation at 1500 kw was demonstrated) before being dismantled early in 1954.[1-4]

The HRE-1 was designed to be a short-term reactor experiment to investigate the nuclear and chemical stability of a moderately high-power density circulating fuel reactor, fueled with a light water solution of enriched uranyl sulfate. As a result of HRE-1 operation, several uncertainties regarding the behavior of aqueous homogeneous reactors were resolved. Among these were demonstrations of (1) a remarkable degree of inherent nuclear stability, a result of the large negative temperature coefficient; (2) the elimination of the need for mechanical control rods as a consequence of this inherent stability; (3) flexibility and ease of fuel handling; (4) the ability to attain and maintain a leak-tight, high-pressure system in, at least, small reactor systems; (5) safe handling techniques of the radiolytic gases resulting from the radiation decomposition of water; and (6) the direct dependence of reactor power upon turbine demand.[5]

In 1953 a decision was made to construct a second aqueous reactor experiment to investigate the engineering aspects of homogeneous reactors and, in particular, the special considerations necessary for power breeder reactors. Design and construction of the HRE-2 were completed in 1956. After an extensive series of engineering performance tests, the reactor achieved criticality on December 27, 1957.[6]

The reactor was first operated at significant power levels in February 1958. Operation was smooth, and no mechanical difficulties were encountered. In April 1958 the power level was raised in steps of 1 Mw in an approach to the nominal design power level of 5 Mw. Shortly after reaching design power on April 4, 1958, a hole developed in the inlet diffuser region of the Zircaloy-2 core tank, permitting fuel solution to enter the blanket region of the reactor vessel.[7] Based on heat-balance data, the highest power level achieved in this run was 6.3 Mw, about 25% above the nominal design value. After an evaluation of the hydraulic and nuclear behavior of the system, operation resumed in May 1958 with fuel solution in both the core and blanket regions of the reactor. The reactor continued to operate as scheduled until April 28, 1961, at which time reactor operation was discontinued. A total of 16,295 Mwhr was generated during 8841 hr of critical operation of HRE-2.[8]

1.2 OBJECTIVES

The objectives of the HRE-2 are:[5] (1) to demonstrate that a homogeneous reactor of moderate size can be operated with the continuity required of a power plant, (2) to establish the reliability of engineering materials and components which can be used for scaling-up purposes for full-scale

power plants, (3) to evaluate equipment modifications which will lead to simplification and economy, (4) to develop and test simplified maintenance procedures, particularly underwater maintenance techniques, and (5) to develop and test methods for the continuous removal of fission and corrosion products.

Originally, the reactor was to operate first with a D_2O reflector, then with a concentrated, depleted uranyl sulfate solution in the blanket to investigate the production of plutonium that is low in Pu^{240} content, and finally with a thorium oxide slurry in the blanket to investigate breeder reactor problems. (Because of the intended mode of operation, the terms "reflector" and "blanket" are used interchangeably.) The final mode of operation would necessitate replacement of a considerable portion of the blanket system with new equipment specifically designed for use with slurries. These operating plans were altered by the development of the hole in the core tank, by a decreased interest in plutonium production, and by the status of the development of slurry systems, which indicated that the blanket region of the reactor vessel, as designed, would not be suitable for slurry operation. Although the design of the reactor was markedly affected by the experiments proposed for the blanket and although minor modifications were required to permit operation with the hole in the core, only the design completed in 1956 and operation with a D_2O reflector will be considered in detail in this report.

The reader is referred to the progress reports[9] for additional information on design, development, and operation of HRE-1 and HRE-2. Operating experience gained from HRE-2 has been reported in the literature[10] and in a series of run summaries.[11] Similarly, experience gained from the associated chemical plant has been reported.[12] A selected bibliography of Homogeneous Reactor Project reports related to HRE-2 has been compiled,[13] which, with the references contained in this report, provides a rather complete bibliography of design, development, and operation of HRE-2.

1.3 DESIGN BASES

The design bases of the reactor, selected early in 1954, were to provide a reliable experimental reactor for investigating general operational problems of aqueous homogeneous reactors and for testing fuels and concepts of interest for large power and breeder reactors, and to take full advantage of the best information then available regarding fuel solution chemistry, materials and component development, and HRE-1 operating experience.[14] To satisfy the objectives of a significant test of the engineering feasibility, the physical size of the reactor and its auxiliaries was increased appreciably beyond that of the first reactor experiment. However, to hold the cost in reasonable bounds, it was decided to limit the power output and thus the expense for heat removal equipment and to install the reactor in the building which had previously housed HRE-1, thus permitting the use of many existing site facilities. A summary of design bases is given in Table 1.1; a more complete listing is presented in Table 2.2.

The reactor core was a sphere, 32 in. in diam, the minimum size capable of operating at 300°C with a critical concentration of 10 g of U per liter and using uranyl sulfate in D_2O as the fuel (93% enriched in U^{235}) and a D_2O reflector. The power level was set at a nominal 5 Mw (thermal), with the possibility of operating at 10 Mw maximum. For 5 Mw core power, the core diameter fixes the average specific power at 17 kw/liter; this was considered acceptable since operation at a relatively high power density (up to 30 kw/liter) had been demonstrated in HRE-1.

The core tank material was specified as Zircaloy-2, an alloy of zirconium containing about 1.5% tin as the major alloying agent, to extend the development of zirconium-based alloys to include fabrication techniques suitable for core tanks in large breeder reactors. Previous development of the zirconium alloys had been directed toward production of plate- and pin-type fuel elements. The use of Zircaloy-2 for the core tank material (HRE-1 used type 347 stainless steel) was considered a significant extension of existing technology pertaining to Zircaloy and aqueous homogeneous reactors. The thickness of the core tank was specified as $\frac{1}{4}$ in. minimum to provide adequate stability against collapse under external pressure differentials. Greater thicknesses

would have decreased the structural similarity to the relatively thin core tanks required for good neutron economy in large power breeder reactors.

The maximum fuel temperature was increased from 250°C in HRE-1 to 300°C in HRE-2 to take advantage of the greater corrosion resistance of stainless steel to dilute uranyl sulfate solutions at the higher temperature and to improve the thermal efficiency. Since the temperature at which two liquid phases appear is about 330°C for the more dilute fuel (compared with 280°C for the 40 g per liter of HRE-1 fuel), the maximum temperature could be raised to 300°C and retain an adequate margin of safety against two-phase formation.

The design pressure of 2000 psi, 750 psi in excess of the 1250 psi vapor pressure of water at 300°C, was specified to prevent bulk boiling, to reduce the volume of gas in the core in the absence of an internal homogeneous catalyst, and to minimize the required concentration of the copper catalyst.

Table 1.1. Summary of HRE-2 (HRT) Design Bases

Power (thermal), kw	5000
Temperature (core outlet), °C	300 (max)
Pressure (total), psia	2000 (max)
Core:	
Diameter (sphere), in.	32
Solution	$UO_2SO_4 + CuSO_4 + D_2SO_4$ in D_2O
Concentration (93% enriched) g of U per liter	10 (max)
Flow pattern	Straight through
Flow rate, gpm	400
Velocity, fps	20 (max)
Vessel material	Zircaloy-2
Blanket:	
Diameter (sphere), in.	60
Composition (initial operation)	D_2O[a]
Flow rate, gpm	230[b]
Velocity, fps	20 (max)
Vessel material	Stainless-steel-clad carbon steel
Radiolytic gas recombination catalyst:	
High-pressure system	$CuSO_4$ in solution
Low-pressure system	Platinized alumina
Fission-product disposal:	
Gases	Decay on activated charcoal
Solids	Mechanical separation
Control mechanisms:	
Shim (temperature)	Variable solution concentration
Safety	Negative temperature coefficient
Regulation	Negative temperature coefficient
Power	Release of steam from heat exchanger

[a]See text for subsequent proposed operation.

[b]Required for use with uranyl sulfate solution and slurry blankets.

The thickness of the blanket surrounding the core was a compromise between neutron leakage and pressure vessel size. Originally specified as 12 in., a final blanket thickness of 14 in. resulted from the selection of a 60-in.-ID pressure vessel, which allowed utilization of existing forming dies by the vessel supplier.

The fuel circulation rate of 400 gpm was based on heat-removal requirements with limits of 250°C minimum and 300°C maximum and the availability of suitable pumps. The blanket flow rate of 230 gpm was based on the use of a pump of the same horsepower as the fuel circulating pump but designed to circulate a thorium oxide suspension (density, approximately 2 g/cm^3) rather than pure D_2O.

The vortex-type flow through the core of the first reactor experiment was abandoned in favor of straight-through flow because hydrodynamic experiments had demonstrated the pressure drop of the former to be very large for cores of large reactors. As a result, the direct extraction of gas from the core was excluded, and an external gas separator was placed in the exit pipe from the core. Initially, the reactor was to operate with a letdown through the gas separator of 10 to 15 scfm of radiolytic gas (about 20% of the total amount generated). It was later determined that it would be necessary to maintain excess oxygen in solution at a minimum concentration of approximately 200 ppm to prevent oxygen depletion and severe corrosion in stagnant fuel lines. Since this concentration could not be maintained with gas letdown, complete internal recombination was specified, and only fuel solution was let down from the reactor.

Radiolytic gas, excess oxygen, and fission product gases are released from the fuel solution when it is let down and boiled in the low-pressure system. A bed of silver-coated wire mesh is installed in the off-gas line between the fuel dump tanks and the recombiner to adsorb iodine, thereby reducing the concentration of iodine and xenon in the fuel and the poisoning effect of iodine on the platinized alumina catalyst of the recombiner. Disposal of radioactive fission product gases is accomplished by adsorption and decay on activated carbon. Stable fission product gases, Kr^{85}, and excess oxygen are discharged to the atmosphere through a stack. Oxygen is injected into the fuel feed stream to maintain the concentration at about 500 ppm in the reactor circulating system.

Type 347 stainless steel or carbon steel clad with stainless steel is the construction material for all the reactor system except the Zircaloy-2 core vessel. The velocity of the fuel solution through the stainless steel piping is kept below 20 fps to avoid excessive corrosion. Titanium was chosen for increased corrosion resistance at certain points of high turbulence, such as the pump impellers and the gas separator. (See Secs 3.5 and 3.6.)

1.4 GENERAL DESCRIPTION OF HRE-2

The HRE-2 is a two-region, circulating fuel, aqueous homogeneous reactor.[5,15,16] The reactor consists of an inner spherical Zircaloy-2 core vessel, through which the fuel solution (93% U^{235} in $UO_2SO_4 + CuSO_4 + D_2SO_4$ in D_2O) is circulated. The inner Zircaloy vessel is surrounded by a 14-in.-thick blanket of D_2O contained in a 60-in.-ID spherical pressure vessel. Made of stainless-steel-clad carbon steel with a total wall thickness of 4.4 in., the vessel is designed to contain the blanket fluid at 2000 psi. Surrounding the pressure vessel is a 1.5-in.-thick type 304 stainless steel blast shield designed to stop fragments in the event of a brittle fracture type failure of the carbon steel pressure vessel. An artist's concept of the reactor pressure vessel assembly is shown in Fig. 1.1.

A simplified flowsheet of the reactor is shown in Fig. 1.2. As can be seen in the figure, the reactor consists of two essentially identical systems, each of which contains a high-pressure circulating loop and a low-pressure concentrating and storage system. The systems and their functions will be described briefly.

In the high-pressure fuel circulating system, the fuel solution is pumped into the bottom of the reactor core at 256°C and, at 5 Mw core power, is heated to 300°C as it proceeds upward to the

outlet pipe. At the top of the outlet pipe is attached the electrically heated pressurizer, which generates steam at 335°C and 2000 psi (maximum conditions) by boiling heavy water condensate fed to the pressurizer from the low-pressure system by a diaphragm-type feed pump. The fuel flows past the pressurizer to a gas separator, where directional vanes impart sufficient rotation to the fluid to separate any gas in the fuel solution leaving the core. Although sufficient copper is added to the solution to internally recombine the radiolytic gases (D_2 and O_2) produced under normal operation, there may be some gas produced during special experiments. Any gas which is present forms a vortex along the axis of the pipe and is bled to the low-pressure system with about 1 gpm of fuel solution. The reactor solution continues from the gas separator to the U-tube primary heat exchanger, where it is cooled from 300°C to 256°C by transferring heat to the boiling water surrounding the tube bundle. Saturated steam at 479°F and 520 psia is produced on the shell side of the heat exchanger. The steam is bled partially to the small (345 kva output) turbine generator (from the HRE-1) and partially to an air-cooled steam condenser. The uranyl sulfate solution flows next to the intake of the 400-gpm canned-motor circulating pump and then to the core for reheating. The blanket fluid follows an identical cycle at a flow rate of 230 gpm.

Fuel solution and any undissolved gases that may be present are removed through the gas separator and transferred to the low-pressure system through a letdown heat exchanger, a jacketed pipe which cools the effluent mixture to about 90°C. A valve downstream of the heat exchanger throttles the effluent stream to about atmospheric pressure. The mixture then discharges into the dump tanks, which have sufficient capacity to store all of the reactor liquid during a shutdown. An evaporator below the dump tanks provides continuous mixing, steam for dilution of the deuterium and oxygen to a nonexplosive mixture, and a means for concentration control. The gas and steam mixture flows upward through the iodine bed to the catalytic recombiner, in which the deuterium and oxygen react on platinized alumina pellets to form water vapor. The heavy water is condensed by a shell-and-tube condenser following the recombiner. The condensate flows back to the dump tanks; however, it may be diverted to weighed storage tanks for use in changing the concentration of the reactor fluid. Water which is returned to the dump tanks is mixed with the excess fuel solution (approximately 100 liters) stored there and then fed to the intake of a sealed diaphragm injection pump which returns the liquid to the high-pressure circulating system at a rate of about 1 gpm, thus constantly replacing the liquid removed via the gas separator.

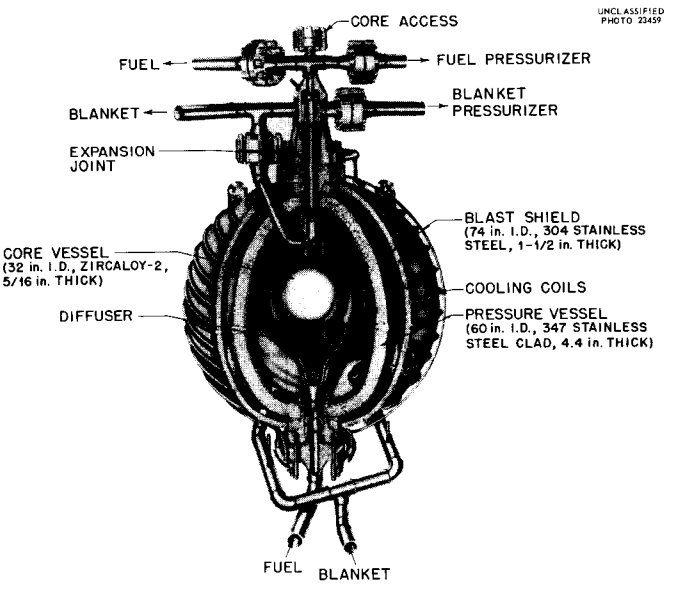

Fig. 1.1. HRE-2 Reactor Vessel Assembly.

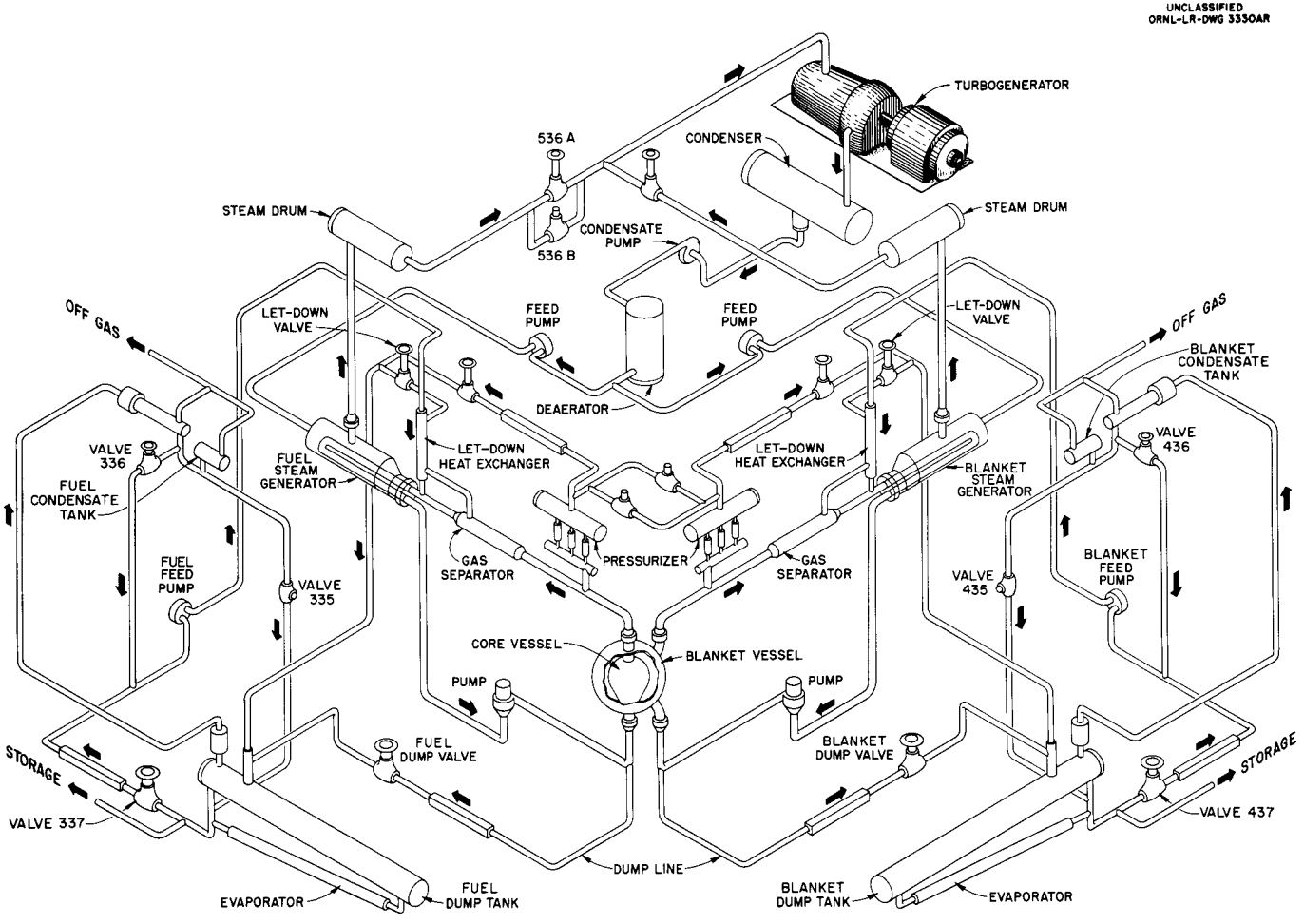

Fig. 1.2. HRE-2 Flowsheet.

Cold traps, operating at about $-23°C$, dry the noncondensable gases remaining after condensation of the recombined water before they are sent to activated charcoal adsorber beds for holdup and decay of fission gases. The off-gas flow, about 2.5 liters/min (STP), is composed almost entirely of excess oxygen and a very small volume of fission gases, primarily xenon and krypton. The effluent gas from the adsorber beds is filtered and diluted with 1400 scfm of air and discharged to the atmosphere from a 100-ft-high stack.

Samplers are provided to secure small quantities (5 ml) of the fuel and blanket liquids from the high- and low-pressure systems for chemical analysis. These units are located in bypass lines; a portion of the material circulated through them is isolated by closing the inlet and exit valves. The samples are then cooled and discharged into a portable container through a drain valve.

A chemical processing plant is provided adjacent to the reactor cell. A bypass stream of about 1 gpm is taken from the reactor fuel system, circulated through a solids separation system at reactor operating temperature and pressure, and returned to the reactor system. The system consists of a heater to make up heat losses, a filter to protect the hydroclone from plugging, a hydroclone with an underflow receiver for concentrating the solids, and a canned-motor circulating pump to make up pressure losses across the system. The purpose of the chemical plant is to remove fission and corrosion product precipitates from the fuel solution and to recover D_2O from the separated materials.

A drawing of the reactor building is shown in Fig. 1.3. All the primary reactor equipment is located in a shielded tank (54 ft long by 26 ft wide by 25 ft deep) which occupies the center high bay area of the building. The design was influenced by several factors, including a requirement for accessibility and flexibility because of the experimental nature of the installation, provision for complete containment of the reactor contents in case a leak developed or the pressure vessel or heat exchangers ruptured, efficient utilization of the space within an existing structure, and capability of flooding with water for maintenance or replacement operations. The tank is constructed of $\frac{3}{4}$-in. welded steel plate, reinforced so that an internal pressure of 7 psia can be maintained during normal operation and a pressure of 45 psia will be contained. The chemical processing cells, each 12 ft wide by 24 ft long, are designed similarly.

The reactor building plan and elevations are shown in Fig. 1.4. A plot plan of the reactor site is shown in Fig. 1.5. Additional details of the construction of the reactor shield tank are shown in Fig. 4.1.3.

Built flush with ground level, the roof of the reactor cell consists of two layers of removable slabs with a completely welded steel sheet sandwiched between the layers and extending across the top of the pit to form a gastight lid. The roof blocks, made of high-density concrete, are 5 ft in total thickness and are anchored to the girders and supporting columns by means of a slot and key arrangement. The vertical support columns are imbedded in a concrete pad 3 ft thick and heavily reinforced with steel.

The shield wall between the reactor cell and the lower levels of the control area on the north side of the reactor is a 5.5-ft-wide box constructed of $\frac{1}{2}$-in. steel plates. It is filled with a mixture of high-density barytes, sand, and water. The use of the fluid shield between the reactor area and the control room allows flexibility in the location of service piping and instrument and electrical conduits. All lines penetrating the reactor tank are welded into the shield wall; conduits are connected into junction boxes inside the pit with gastight seals on the individual wires.

The design of the biological shield is such that the radiation dose rate will not exceed 10 millirep/hr when the reactor is at 10 Mw. To decrease the neutron activation of equipment inside the pit, the reactor vessel is surrounded by a thermal neutron shield, consisting of a 2-ft-thick annular steel tank filled with barytes, sand, and water.

The general arrangement of reactor components within the reactor shield tank is shown in Fig. 5.1.1. The reactor cell is essentially divided in halves by a watertight bulkhead for ease in maintenance. To the left of the bulkhead is the fuel system equipment, and to the right is the blanket equipment.

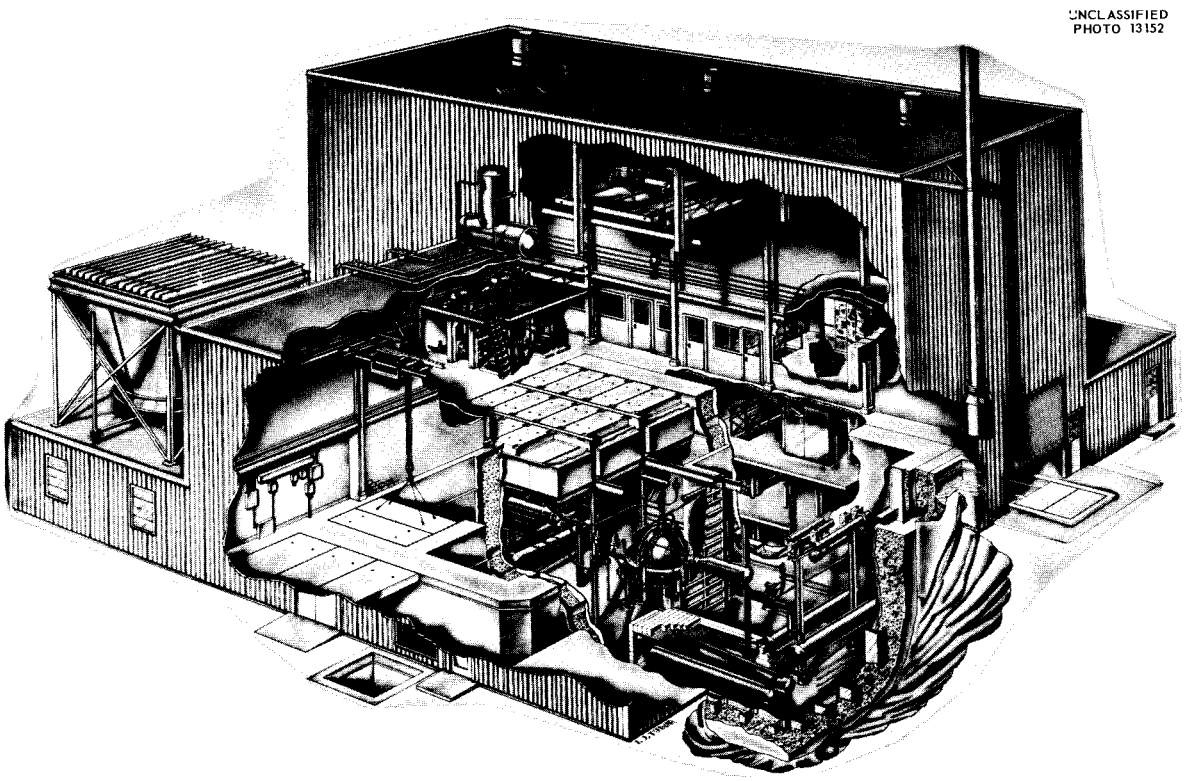

Fig. 1.3. Artists' Concept of Homogeneous Reactor Test Building.

Most of the high-pressure components are located close to the pressure vessel. The pressurizers are positioned directly above the reactor; the gas separators are in the lines extending to the steam generators at the south side of the pit. The fuel low-pressure equipment, including dump tanks, recombiner, condensate tank, and cold traps, etc., is grouped at the west end of the cell. These components are assembled on a rigid structural steel frame and installed as a unit. The blanket low-pressure equipment, similar to the fuel low-pressure equipment, is located in the extreme east end of the cell.

Insofar as possible, valves are situated close to the control room wall so that air lines and leak detector lines can be kept short. All valves are flanged in the lines to facilitate removal. Their arrangement is such that the flanges can be easily disconnected from above.

1.5 LOCATION OF HRE-2

The HRE-2 is located at the site of the HRE-1, 0.6 mile southeast of the center of the present ORNL area. This places the reactor in the center of an uninhabited valley approximately 4 miles long and 0.5 mile wide. The valley, which lies in an east-west direction, is parallel to Bethel and other neighboring valleys. The Clinch River terminates both ends of the valley and forms a natural boundary of approximately 2 miles radius for a 180° arc swing from the site. An area map, showing the relative location of the reactor site (Building 7500) to ORNL, is shown in Fig. 1.6.

The site (elevation, 830 ft) and ORNL, located in Bethel Valley at about 800 ft elevation, are separated by Haw Ridge (average elevation, 980 ft). This ridge is continuous except for a short break, White Oak Creek Gap (elevation, 770 ft), through which a portion of Bethel Valley

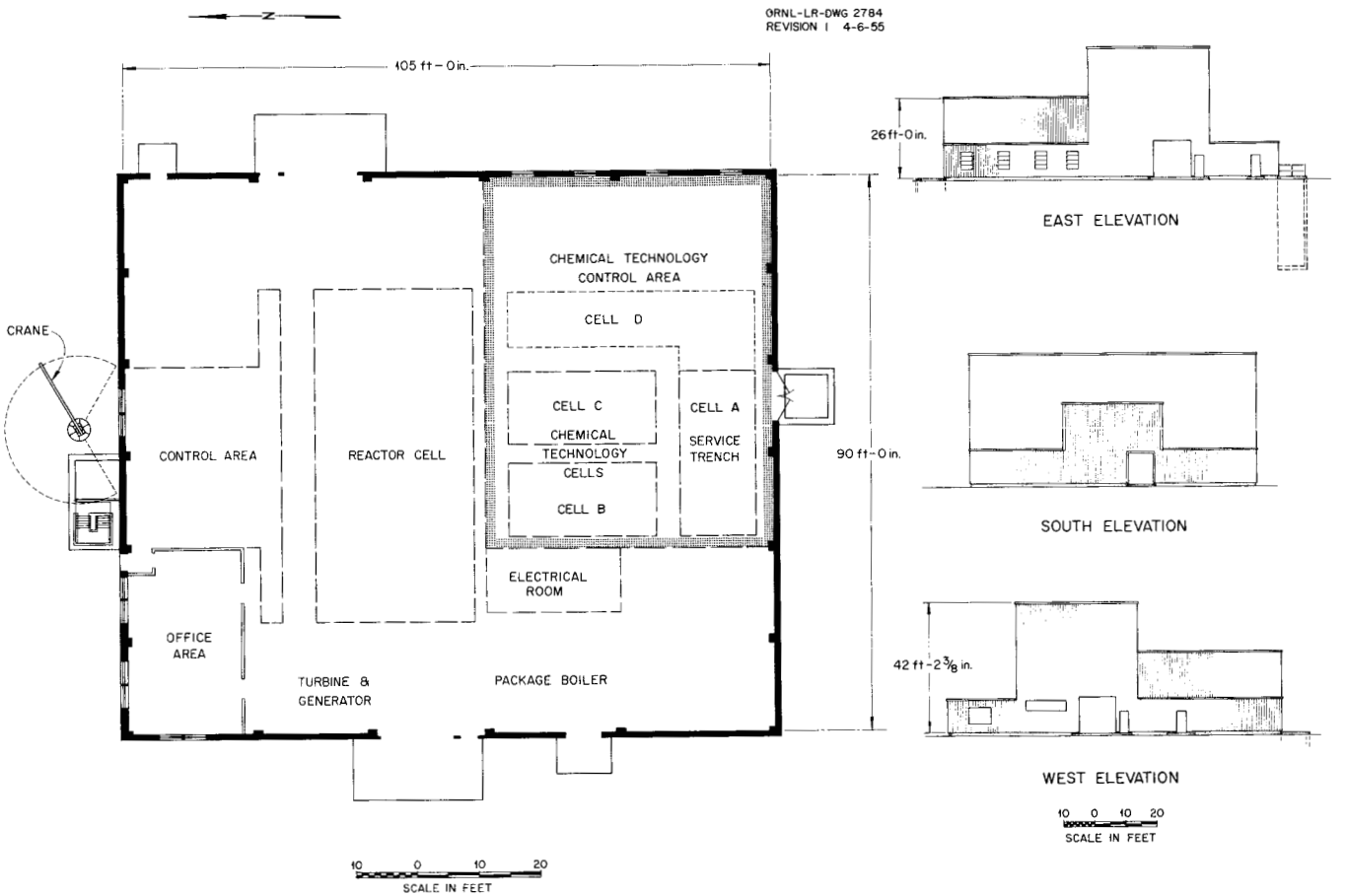

Fig. 1.4. Plan and Elevations of Building 7500.

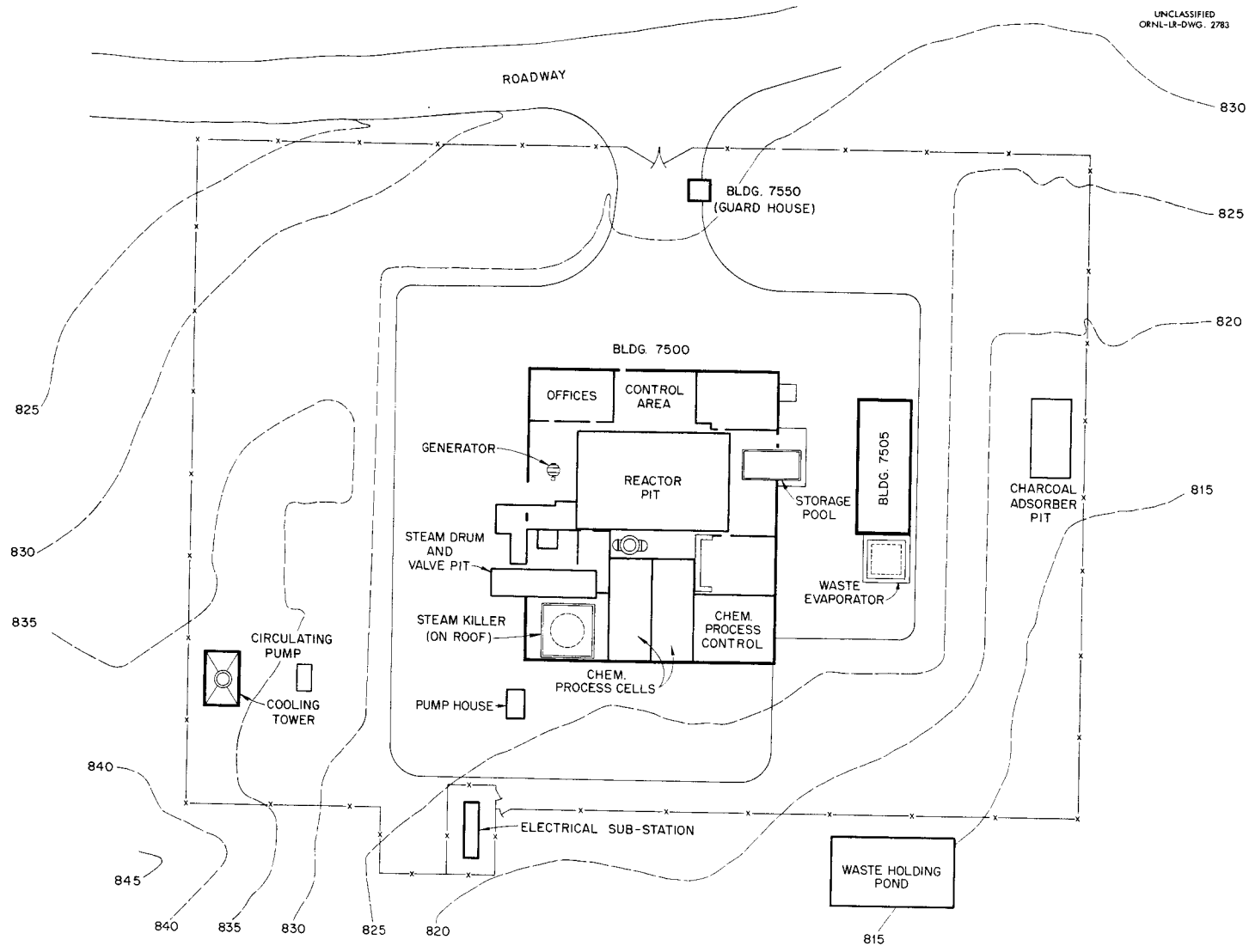

Fig. 1.5. Plot Plan of Reactor Site.

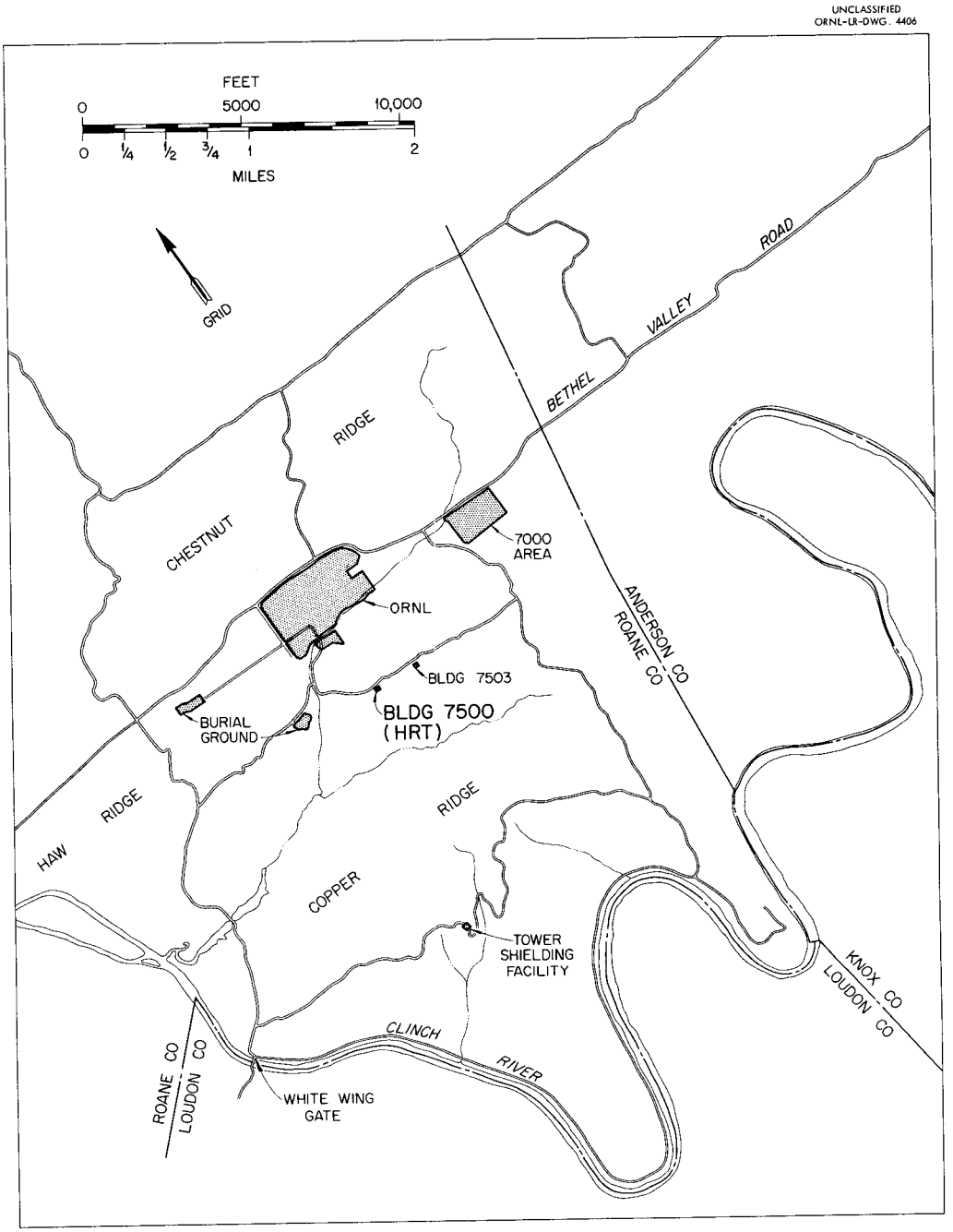

Fig. 1.6. ORNL Area Map.

drainage occurs. To the south and east of the site is a large area of high, rough terrain which extends south to the Clinch River.

1.6 AVAILABILITY OF UTILITIES

A well-graded road connects the site with the ORNL area. This road circles through White Oak Creek Gap, turns northeast (parallel to Haw Ridge) and passes directly in front of the site, one mile from Bethel Valley Road. Helium cylinders, oxygen cylinders, chemicals, and other portable supplies may be trucked to the site via this road.

A 12-in. pipeline connects the site with the ORNL water reservoir. Approximately 2000 gal/min of process water at 15.5 psi can be delivered to the site through this line. At an estimated maximum demand of 750 gpm, the pressure is computed to be 46.2 psi at the downstream side of the main gate valve in the building.

The high cost of process water precluded the use of a once-through cooling system; therefore, a cooling tower capable of cooling 800 gpm water from 135°F to 90°F with air at a wet bulb temperature of 80°F is provided.

Electrical energy for the site is supplied by a 154/13.2-kv substation, transmission line, and transformer step-down station. From this station the 13.2-kv, 3-phase, 60-cycle circuit is transformed into more usable service circuits. In addition to the electrical energy supplied to the site, some power can be generated for emergency use by using building steam in the 345-kva output turbine generator remaining from HRE-1 operations.

Building steam is normally supplied from ORNL at 250 psig and is reduced, at appropriate stations, for building services and for reactor process steam. A high-pressure (1500 psig) package boiler is provided primarily to heat the reactor and associated equipment from a cold start, but it may also be used for emergency standby building steam. Feedwater for the reactor steam system and the package boiler system and pure water for the water cooling systems are obtained by condensing building steam at the site.

Adequate space for the operating and maintenance personnel is available in the reactor building and in adjacent shop and office buildings.

REFERENCES

1. S. E. Beall and C. E. Winters, *Chem. Eng. Progr.* **50**(5), 256–62 (1954).
2. C. L. Segaser and F. C. Zapp, *HRE Design Manual,* ORNL CF-52-6-160 (Nov. 18, 1952).
3. D. O. Campbell, *Decontamination of the Homogeneous Reactor Experiment,* ORNL-1839 (Mar. 22, 1956).
4. J. A. Lane, H. G. MacPherson, and F. Maslan (eds.), *Fluid Fuel Reactors,* Addison-Wesley, Reading, Mass., 1958.
5. S. E. Beall and J. A. Swartout, *Proc. Intern. Conf. Peaceful Uses At. Energy, Geneva, 1955* **3,** 263–85 (1955).
6. S. E. Beall *et al., HRP Quart. Progr. Rept. Jan. 31, 1958,* ORNL-2493, pp 4–8.
7. S. E. Beall *et al., HRP Quart. Progr. Rept. Apr. 30 and July 31, 1958,* ORNL-2561, pp 5–7.
8. J. R. Engel *et al., Summary of HRT Run 25,* ORNL TM-173 (July 25, 1962).

9. Homogeneous Reactor Project Quarterly Progress Reports:

ORNL-527	Date Issued, Dec. 28, 1949
ORNL-630	Period Ending Feb. 28, 1950
ORNL-730	Feasibility Report – Date issued, July 6, 1950
ORNL-826	Period Ending Aug. 31, 1950
ORNL-925	Period Ending Nov. 30, 1950
ORNL-990	Period Ending Feb. 28, 1951
ORNL-1057	Period Ending May 15, 1951
ORNL-1121	Period Ending Aug. 15, 1951
ORNL-1221	Period Ending Nov. 15, 1951
ORNL-1280	Period Ending Mar. 15, 1952
ORNL-1318	Period Ending July 1, 1952
ORNL-1424	Period Ending Oct. 1, 1952
ORNL-1478	Period Ending Jan. 1, 1953
ORNL-1554	Period Ending Mar. 31, 1953
ORNL-1605	Period Ending July 31, 1953
ORNL-1658	Period Ending Oct. 31, 1953
ORNL-1678	Period Ending Jan. 31, 1954
ORNL-1753	Period Ending Apr. 30, 1954
ORNL-1772	Period Ending July 31, 1954
ORNL-1813	Period Ending Oct. 31, 1954
ORNL-1853	Period Ending Jan. 31, 1955
ORNL-1895	Period Ending Apr. 30, 1955
ORNL-1943	Period Ending July 31, 1955
ORNL-2004	Period Ending Oct. 31, 1955
ORNL-2057	Period Ending Jan. 31, 1956
ORNL-2096	Period Ending Apr. 30, 1956
ORNL-2148	Period Ending July 31, 1956
ORNL-2222	Period Ending Oct. 31, 1956
ORNL-2272	Period Ending Jan. 31, 1957
ORNL-2331	Period Ending Apr. 30, 1957
ORNL-2379	Period Ending July 31, 1957
ORNL-2432	Period Ending Oct. 31, 1957
ORNL-2493	Period Ending Jan. 31, 1958
ORNL-2561	Periods Ending Apr. 30, and July 31, 1958
ORNL-2654	Period Ending Oct. 31, 1958
ORNL-2696	Period Ending Jan. 31, 1959
ORNL-2743	Period Ending Apr. 30, 1959
ORNL-2879	Period May 1 through Oct. 31, 1959
ORNL-2920	Period Ending Jan. 31, 1960
ORNL-2947	Period Ending Apr. 30, 1960
ORNL-3004	Period Ending July 31, 1960
ORNL-3061	Period from Aug. 1 to Nov. 30, 1960
ORNL-3167	Period from Dec. 1, 1960 to May 31, 1961

10. P. N. Haubenreich, *Nucl. Sci. Eng.* **8**(6), 467–79 (1960).

11. J. R. Engel *et al.*, *Summary of HRE-2 Run 13 (Initial Power Operation)*, ORNL CF-58-10-115 (Oct. 29, 1958); J. R. Engel *et al.*, *Summary of HRT Run 14*, ORNL CF-59-6-96 (June 8, 1959); J. R. Engel *et al.*, *Summary of HRT Run 16*, ORNL CF-60-4-4 (Apr. 8, 1960); P. N. Haubenreich *et al.*, *Summary of HRT Run 17*, ORNL CF-60-8-151 (Aug. 1, 1960); H. F. Bauman *et al.*, *Summary of HRT Run 18*, ORNL CF-60-8-152 (Aug. 26, 1960); H. F. Bauman *et al.*, *Summary of HRT Run 19*, ORNL CF-61-3-86 (Mar. 16, 1961); H. F. Bauman *et al.*,

Summary of HRT Run 20, ORNL CF-61-7-91 (July 19, 1961); P. N. Haubenreich *et al., Summary of HRT Run 21,* ORNL TM-42 (Oct. 10, 1961); H. F. Bauman *et al., Summary of HRT Runs 22, 23, and 24,* ORNL TM-106 (Mar. 6, 1962); J. R. Engel *et al., Summary of HRT Run 25,* ORNL TM-173 (July 25, 1962).

12. O. O. Yarbro, *HRT-Chemical Plant Run 16 Summary,* ORNL CF-58-10-111 (Oct. 9, 1958); O. O. Yarbro, *HRT-Chemical Plant Run 17 Summary,* ORNL CF-59-3-62 (Mar. 6, 1959); O. O. Yarbro, *HRT-Chemical Plant Runs 18 and 19 Summary,* ORNL CF-60-3-161 (Mar. 25, 1960); O. O. Yarbro, *HRT-Chemical Plant Run 20 Summary,* ORNL CF-60-7-120 (July 1, 1960); O. O. Yarbro, *HRT-Chemical Plant Run 21 Summary,* ORNL TM-224 (Feb. 12, 1962); O. O. Yarbro, *Summary of HRT-Chemical Plant Runs 22 through 25,* ORNL-TM (in preparation).

13. S. R. Buxton and P. N. Haubenreich, *A Selected Bibliography of Homogeneous Reactor Project Reports Related to the Design, Development, and Operation of HRE-2,* ORNL-TM (in preparation).

14. R. B. Briggs *et al., HRP Quart. Progr. Rept. Jan. 31, 1954,* ORNL-1678, pp 21–22.

15. S. E. Beall and S. Visner, *Homogeneous Reactor Test Summary Report for the Advisory Committee on Reactor Safeguards,* ORNL-1834 (Jan. 7, 1955).

16. S. E. Beall and S. Visner, *Revision for the HRT Summary Report – ORNL-1834,* ORNL CF-55-3-14 (Mar. 1, 1955).

2. HRE-2 Process Design

2.1 SYSTEM FLOWSHEETS

A simplified version of the HRE-2 flowsheet is shown in Fig. 1.2. This flowsheet shows only the major items of equipment and their relationship to the whole system. In order to completely describe the process design of the reactor, the system must be subdivided into a series of functional flowsheets, each of which will be described in a subsequent section. Table 2.1 lists the flowsheets and their figure numbers. A flowsheet identification code is presented in Fig. 2.1.

These flowsheets are the most recently revised versions; and they reflect the design, development, operating experience, and philosophy up to the date of their publication.[1] The development of the flowsheets can be followed in detail by referring to the previous issues,[2] to the memoranda describing flowsheet changes,[3] and to the HRP Quarterly Progress Reports (see ref 9, Chap. 1).

The first four process flowsheets show the the division between high- and low-pressure fuel and blanket systems. Certain equipment, such as letdown heat exchangers, feed pumps, etc., are repeated at the dividing points. The flowsheets were also designed to make it possible to cut the sheets and join them to make one long flowsheet without repetition of equipment or lines. Relative elevations of components are maintained on the flowsheets insofar as is practicable.

In developing the flowsheets, item numbers were assigned to all functional equipment for reference purposes. A tabulation of the components, item numbers, and system flowsheets is given in Appendix A. Similarly, line numbers were assigned to the piping which connects components, instruments, and other pipe lines. A line schedule, consisting of a tabulation of line numbers, their sizes, materials, end points, and remarks, was issued as a complement to the flowsheets.[4] In general, flowsheet line numbers for the fuel system are a 100 series; the corresponding lines for the blanket system are a 200 series. Therefore, similarly numbered lines – for example, 102 and 202 – will have the same function in their respective systems.

Table 2.1. HRE-2 Process Flowsheets

Fig. No.	Caption
2.1	HRT Flowsheet Identification Code
2.2	High-Pressure Fuel System
2.3	High-Pressure Blanket System
2.4	Low-Pressure Fuel System
2.5	Low-Pressure Blanket System
2.6	Water Cooling System (Demineralized water)
2.7	Water Cooling System (Potable water)
2.8	Steam System
2.9	Waste and Vent System (Part A)
2.10	Waste and Vent System (Part B)
2.11	Refrigeration and Cold Trap System
2.12	Steam and Condensate Service
2.13	Leak Detector System

UNCLASSIFIED
DWG. NO. D-18330E

NOTE: ALL PROCESS LINE INFORMATION IS FOR OPERATION AT AN OVERALL GROSS POWER OF 5220 KW.

I. LINE NUMBER NOMENCLATURE

THE LINE SCHEDULE IS DIVIDED INTO FIVE SECTIONS AS FOLLOWS·

1. PROCESS PIPING

A) FUEL SYSTEM - LINES 100-199 INCLUSIVE

INCLUDES ALL LINES NORMALLY CARRYING FUEL SOLUTIONS; OVERFLOW, VAPOR AND CONDENSATE, TRANSFER AND SAMPLE LINES.

B) BLANKET SYSTEM - LINES 200-299 INCLUSIVE

INCLUDES ALL LINES NORMALLY CARRYING BLANKET SOLUTION; OVERFLOW, VAPOR AND CONDENSATE, TRANSFER, AND SAMPLE LINES.

2. STEAM PIPING

LINES 300-399 INCLUSIVE.

INCLUDES ALL LINES CARRYING STEAM OR CONDENSATE, AND FEEDWATER SYSTEM.

3. SERVICE PIPING

LINES 400-574; 601-674; 701-949; INCLUSIVE.

INCLUDES ALL STEAM, WATER, VENT, COOLING WATER, AND REFRIGERANT LINES.

4. PROCESS INSTRUMENT PIPING

LINES 575 – 599 INCLUSIVE
668 – 679 INCLUSIVE
691 – 699 INCLUSIVE
1000 – 1020 INCLUSIVE
} SHOWN IN BOX 575

5. LEAK DETECTION SYSTEM

LINES 1 – 96 INCLUSIVE – FUEL SIDE
1B – 96B INCLUSIVE – BLANKET SIDE
950 – 974 INCLUSIVE – FUEL SIDE
975 – 999 INCLUSIVE – BLANKET SIDE

IA. INSTRUMENT NUMBERING CODE

1. INSTRUMENT PROCESS DIVISIONS

100-199	FUEL HIGH PRESSURE
200-299	BLANKET HIGH PRESSURE
300-399	FUEL LOW PRESSURE
400-499	BLANKET LOW PRESSURE
500-699	STEAM POWER
700-799	OFF GAS
800-899	UTILITIES
900-999	MISCELLANEOUS

2. 2nd AND 3rd DIGITS

2nd AND 3rd DIGITS	FUNDAMENTAL VARIABLE	MULTIPURPOSE NUMBERS
00-04	ANALYSIS	0000-0400
05-14	ELECTRIC	0500-1400
15-34	FLOW	1500-3400
35-44	HAND	3500-4400
45-49	LEVEL*	4500-4900
50-59	PRESSURE	5000-5900
60-64	RADIATION	6000-6400
65-94	TEMPERATURE	6500-9400
95-99	WEIGHT	9500-9900

II. LINE IDENTIFICATION

LINE NUMBERS 103
SHIELD LINE . . . . . .
PRIMARY PROCESS LIQUID LINE . . . . . .
SECONDARY PROCESS LIQUID LINE . . . . . .
PRIMARY PROCESS GAS OR VAPOR LINE . . . . . .
SECONDARY PROCESS GAS OR VAPOR LINE . . . . . .
STEAM LINE . . . . . .
AIR LINE . . . . . .
ELECTRICAL LINE . . . . . .
GAS . . . . . .
NITROGEN . . . . . .

III. PIPE LINE CODE

TYPICAL CODE ON LINE

1-1/2'' SCH. 80 CARBON STEEL PIPE 1-1/2 C80
1'' SCH. 40 STAINLESS STEEL PIPE . . . . . 1 S40 OR 1-40
1/2'' SCH. 40 WROUGHT IRON PIPE 1/2 W40
1'' SCH. 80 GALVANIZED PIPE 1 G80

IV. GENERAL LEGEND

CONDENSATE DRAIN . . . . . CD
COOLING WATER . . . . . CW
COOLING WATER DRAIN . . . . . CWD
(X – BELOW AIR OPERATED VALVE) - FAILS CLOSED - . .
(O – BELOW AIR OPERATED VALVE) - FAILS OPEN - . .

EXAMPLE:

P C - 4 5 2
- FUNDAMENTAL VARIABLE ALLOCATION NUMBERS
- PROCESS DIVISION NUMBER
- INSTRUMENT CLASSIFICATION LETTER(S)
- FUNDAMENTAL VARIABLE CLASSIFICATION LETTER

V. VALVE AND FITTING SYMBOLS

SAFETY OR RELIEF VALVE. . . . . OR
MANUALLY OPERATED VALVE. . . . . .
CHECK VALVE . . . . . .
AIR OPERATED VALVE (COMMERCIAL DIAPHRAGM) . . . .
AIR OPERATED VALVE (REMOTELY OPERATED IN RADIATION FIELD) . . . . . .
AIR OPERATED VALVE WITH POSITIONER . . . . . .
MANUALLY OPERATED EXTENSION HANDLE VALVE. . . .
GATE VALVE . . . . . .
GLOBE VALVE . . . . . .
VALVE NORMALLY CLOSED. . . . . .
VALVE NORMALLY OPEN. . . . . .
VALVE THROTTLING . . . . . .
SOLENOID VALVE. . . . . .
MECH. COUPLING . . . . . .
REDUCING COUPLING (SCREWED) . . . . . .
REDUCING COUPLING (WELDED) . . . . . .
FLOW RESTRICTOR . . . . . .
FLANGED JOINT . . . . . .
UNION (THREADED). . . . . .
LOAD CELL . . . . . .
STRAINER. . . . . S
TRAP . . . . . T OR T
FREEZER STATION . . . . . F_A
SUBSCRIPT LETTER
A–WELDED SS COIL – PERM. CONN. . . .
B–SOLDERED Cu COIL – PERM. CONN. . .
C–SS OR Cu COIL – TEMP. CONN. . . . .
D–CLAMP-ON JACKET . . . . . .
RUPTURE DISC . . . . . .
CALORIMETER CONNECTION C
VALVE (3-WAY) WITH NORMALLY BLOCKED PORT . . . . . .
VALVE (3-WAY) WITH COMMON PORT . . .
PURGE LINE . . . . . P
PRESSURE REGULATOR VALVE . . . . . .

VI. INSTRUMENTATION AND MISC. SYMBOLS

EQUIPMENT NO. 6
(WHEN SHOWN ON AIR OPERATED VALVES) 3 15
FIGURE TO LEFT INDICATES LOWER AIR OPER. PRESSURE
FIGURE TO RIGHT INDICATES UPPER AIR OPER. PRESSURE
INSTRUMENTS WITH SINGLE FUNCTION:
LOCALLY MOUNTED. . . . . .
TURBINE PANEL MOUNTED. . . . . .
INTERMEDIATE MOUNTED . . . . . .
CONTROL PANEL MOUNTED. . . . . .
AUXILIARY MOUNTED . . . . . .
TRANSMITTER . . . . . .
INSTRUMENTS WITH DUAL FUNCTIONS OR
INSTRUMENTS WITH CLOSE MECH. COUPLING . . . . .
INSTRUMENT NOT COVERED IN CODE . . . . . .
LEADS TO ELECTRICAL CONTROL CIRCUIT . . . . . ECC
LEADS TO ANNUNCIATOR . . . . . ANN
LEADS TO VALVE POSITION INDICATOR . . . . . VPI
INLINE INSTRUMENT . . . . . .

VII. INSTRUMENT CLASSIFICATION CODE

(MEANING OF LETTERS APPEARING IN INST. BALLOONS)

	FIRST LETTER	ANNUNCIATOR	PRIMARY ELEMENT	CONTROLLER	INDICATOR	AMPLIFIER, BOOSTER, RELAY – MODIFIER	RECORDER	TRANSMITTER - TRANSDUCER	SWITCH	RECORDER - CONTROLLER	INDICATOR - CONTROLLER	REMOTE OPERATED VALVE	SELF OR MANUAL OPERATED VALVE	SAFETY VALVE
2ND - 3RD LETTER		A	E	C	I	M	R	T	X	RC	IC	CV	V	SV
ANALYSIS	A	AA	AE	AC	AI	AM	AR	AT	AX	ARC	AIC	ACV		ASV
ELECTRIC	E	EA	EE	EC	EI	EM	ER	ET	EX	ERC	EIC	ECV	EV	ESV
FLOW	F	FA	FE	FC	FI	FM	FR	FT	FX	FRC	FIC	FCV	FV	FSV
HAND	H	HA		HC		HM			HX		HIC	HCV	HV	
LEVEL	L	LA	LE	LC	LI	LM	LR	LT	LX	LRC	LIC	LCV	LV	LSV
PRESSURE	P	PA	PE	PC	PI	PM	PR	PT	PX	PRC	PIC	PCV	PV	PSV
RADIATION	R	RA	RE	RC	RI	RM	RR	RT	RX	RRC	RIC	RCV		
SPEED	S	SA	SE	SC	SI	SM	SR	ST	SX	SRC	SIC	SCV		
TEMPERATURE	T	TA	TE	TC	TI	TM	TR	TT	TX	TRC	TIC	TCV	TV	TSV
WEIGHT	W	WA	WE	WC	WI	WM	WR	WT	WX	WRC	WIC	WCV		
SPECIAL	X	XA	XE	XC	XI	XM	XR	XT	XX	XRC	XIC	XCV	XV	XSV

THE FOLLOWING SUBSCRIPTS MAY BE APPLIED TO THE FIRST LETTER.

a - AVERAGE
c - CONDUCTIVITY
d - DIFFERENTIAL
f - FREQUENCY
g - SPECIFIC GRAVITY
i - CURRENT
m - MOISTURE
pf - POWER FACTOR
pH - CONCENTRATION
t - TIME
v - VOLTS
w - WATTS

Fig. 2.1. HRT-Flowsheet Identification Code.

2.2 PROCESS DESIGN DATA

The design data, used as the basis for process and equipment design,[5-9] have undergone constant revision and expansion since the first issue.[5] A condensed version of the most recent tabulation[9] of the design data is given in Table 2.2.

Table 2.2. HRE-2 Process Design Data

	Core	Blanket
General Data		
Power (thermal), kw	5000	220
Pressure (maximum), psia	2000	2000
Inlet Temperature, °C(°F)	256(493)	278(532)
Outlet temperature, °C (°F)	300(572)	282(540)
Average temperature, °C (°F)	280(536)	280(536)
Reactor vessel volume, liters	294	1562
System volume, liters[a]	491	1750
Specific power, kw/liter	17	0.14
Flow rate, gpm	400	230
Maximum fluid velocity, fps	20	10
Solution Data[b]		
Composition	$UO_2SO_4 + CuSO_4 + D_2SO_4$ in D_2O	D_2O
Uranium concentration, g of U per kg of D_2O	10.4	0
Uranium enrichment, % U^{235}	93	
G value for decomposition, D_2O molecules per 100 ev	1.67	Fast neutrons – 1.5 Gammas – 0.5
D_2 formation,[c] lb-moles/sec	1.72×10^{-3}	4.6×10^{-5}
g-moles/sec	0.781	0.021
O_2 formation,[c] lb-moles/sec	8.6×10^{-4}	2.3×10^{-5}
g-moles/sec	0.390	0.010
Volume of dry gas generated[c,d]		
at 2000 psi, ft^3/sec	1.43×10^{-2}	3.7×10^{-4}
liters/sec	0.40	0.01
at STP ft^3/sec	0.926	0.025
liters/sec	26	0.71
Vapor pressure of D_2O[d]	1250	924
Compressibility factor of D_2O vapor[d]	0.70	0.70
Heat of recombination, Btu per lb-mole of D_2	105,000	105,000
Heat of recombination of D_2 and O_2 Btu/hr	678,000	17,800
kw	199	5.2
Heat of vaporization of D_2O,[d] Btu/lb	550	600
Btu per lb-mole	11,000	12,000
Gas dissolved in saturated solution[d]		
2000 psia, g-moles of D_2 per kg of D_2O	0.13	0.153
g-moles of O_2 per kg of D_2O	0.071	0.085
1700 psia, g-moles of D_2 per kg of D_2O	0.076	0.086
g-moles of O_2 per kg of D_2O	0.043	0.061
$CuSO_4$ to recombine 100% of the gas,[e] g-moles of Cu^{2+} per kg of D_2O		
2000 psia	2.9×10^{-3}	1.8×10^{-5}
1700 psia	4.8×10^{-3}	
Excess D_2SO_4 for stabilizing $CuSO_4$ and UO_2SO_4,[e] m	2×10^{-2}	1.8×10^{-5}
G value for gamma induced recombination, D_2O molecules per 100 ev		5.0

Table 2.2 (continued)

	Core	Blanket
Pumping Requirements		
Reactor-vessel pressure drop, ft of fluid	6	17
Gas-separator pressure drop, ft of fluid	17	5
Heat-exchanger pressure drop, ft of fluid	40	13
Piping and fittings pressure drop, ft of fluid	37	17.6
Total loop pressure drop,[f] ft of fluid	100	52.6
velocity heads	17.3	33.2
psi	35.2	19.0
Number of pumps	1	1
Pump capacity, gpm[g]	400	230
Theoretical power for loop pressure drop, hp	9.03	2.58
Estimated overall efficiency, %	57	57
Estimated power requirement, hp	15.8	4.53
Minimum NPSH required of pump, ft of fluid	30	30
Heat Exchanger Data[h]		
Fluid inlet temperature, °C (°F)	300(572)	282(540)
Fluid outlet temperature, °C (°F)	256(493)	278(532)
Design temperature, °F	600	600
Design pressure		
tube side, psi	2000	2000
shell side, psi	1250	1250
Steam pressure at exit, psia	520	560
Steam temperature at exit, °F	471	479
Feedwater temperature, °F	212	212
Steam generation rate, lb/hr	16,680	734
Steam quality, %	>99	>99
Heat rating, Btu/sec	4750	209
kw	5000	220
Tube size, OD, in.	0.375	0.375
wall thickness, in.	0.065	0.065
Number of tubes	251	251
Process fluid holdup, liters	56.4	56.4
Effective heat transfer area, ft^2	480	480
Velocity through tubes, fps	11	6.3
Apparent overall heat transfer[i] coefficient, Btu hr^{-1} ft^{-2} $(°F)^{-1}$	670	670
LMTD, °F	53.2	2.34
Process fluid flow rate, gpm	400	230
Pressure drop		
Tubes, ft of fluid	30	9.7
psi	11	3.5
Total for HE, ft of fluid	38	13
psi	14	4.7

Table 2.2 (continued)

	Core	Blanket
Gas Separator Data		
Design temperature, °F	600	600
Design pressure, psi	2000	2000
Gas removal rate, cfm[j]		
normal	0	0
maximum	2.38	
Liquid entrainment rate, gpm	1	1
Axial velocity, fps	16–19	9–11
Liquid holdup, liters	5.1	5.1
Pressurizer Data		
Design temperature, °F	650	650
Design pressure, psi	2000	2000
Method of heating[k]	electrical	electrical
Maximum heater temperature, °F	835	835
Maximum power rating, kw	32	32
Normal power demand, kw	12.4	12.4
Purge flow rate, gph	12	12
Liquid holdup, liters	33.4	33.4
Vaporization rate, lb/hr	40.5	40.5

[a]High-pressure system liquid volumes for normal operation. Each pressurizer has an additional 75-liter vapor volume.

References:

C. C. Cardwell and P. N. Haubenreich, *Results of HRT Test IB 5a, Volume Calibration of Fuel High Pressure System*, ORNL CF-56-7-116 (July 30, 1956).

N. W. Curtis and P. N. Haubenreich, *Results of HRT Test IIIB 5a, Volume Calibration of Blanket High Pressure System*, ORNL CF-56-7-117 (July 30, 1956).

[b]See Chap. 7 for discussion of solution chemistry and properties.

[c]Without internal catalyst.

[d]Fuel solution at 300°C, blanket at 282°C.

[e]Recombination of gases in blanket by gamma radiation should be adequate; however, if Copper is required in blanket, the necessary concentrations are as given in table under blanket heading.

[f]Fuel system based on 19.3 fps at 300°C; blanket system based on 10.1 fps at 282°C.

[g]Fuel system at 256°C (494°F); blanket system at 250°C (482°F).

[h]Fuel and blanket heat exchanger designs are same; U-tube, horizontal shell and tube, process fluid in tubes, water and steam on shell side.

[i]Based on $U_{fouled} = 0.75\ U_{clean}$

[j]100% internal recombination.

[k]Four clamp-on clamshell resistance heaters, each 8 kw.

2.3 REACTOR HIGH-PRESSURE SYSTEMS

2.3.1 Fuel High-Pressure System

In describing the high-pressure fuel system flowsheet, shown in Fig. 2.2, reference will be made to item and line numbers for convenience.

A dilute uranyl sulfate solution (about 10 g of μ per kg of D_2O), with additions of copper sulfate for recombination of radiolytic gases and sulfuric acid for stabilization of the fuel solution, is pumped through the core heat-removal circuit at a rate of 180,000 lb/hr (400 gpm at 256°C). The fuel solution enters the bottom of the core tank (item 1) through line 103 at 256°C and passes through a diffuser section before entering the spherical core of the reactor. At 5 mw the fuel is heated to 300°C as it passes upward through the core to the outlet pipe, line 100. A tee connection is located at the top of the reactor vessel (Fig. 1.1). The fuel pressurizer (item 2) connects to one end of the tee; line 100 connects to the other end. The function of the pressurizer will be described later. The core effluent stream flows past the pressurizer connection through line 100 to the pipeline gas separator, item 3 (also see Fig. 3.43). Vanes at the inlet of the gas separator impart rotational flow to the fuel stream. Undissolved or entrained gases are centrifuged to the vortex formed at the axis of the separator and are bled off, along with about 1 gpm of liquid, through line 113 to the low-pressure system. Continuation of this fuel stream is traced in Sec 2.4. A set or recovery vanes at the exit end of the gas separator recovers a portion of the rotational energy of the fluid as it enters line 101 on its path to the fuel heat exchanger, item 4 (see also Fig. 3.23). Entering the U-tube, horizontal, reboiler-type steam generator at 300°C (572°F), the fuel solution is cooled to 256°C (493°F) by transferring its heat to the feedwater surrounding the tube bundle. Saturated steam at 520 psia (471°F) is produced on the shell side of the exchanger at a rate of 16,670 lb/hr; its path is traced in Sec 2.6. Leaving the heat exchanger through line 102, the fluid flows to the suction of the 400-gpm, canned motor, water-cooled, circulating pump, item 5 (also see Fig. 3.37), where the head required to overcome the system pressure drop is restored. The pump discharge is directed back to the core through line 103.

System pressure is maintained by a steam pressurizer, item 2 (also shown in Fig. 3.20), which is attached to the tee connection on top of the reactor vessel. Normally, an overpressure (up to 750 psi) is applied to the 1250-psia vapor pressure at 300°C to prevent bulk boiling in the core and to inhibit bubble formation and growth in the absence of complete recombination of radiolytic gases. Total system pressure is derived by boiling D_2O condensate, supplied from the low-pressure system at a rate of about 1 lb/min by a diaphragm feed pump (item 23), in the electrically heated pressurizer at temperatures as high as 335°C, corresponding to 2000 psia total system pressure. Overflow of excess condensate feed and condensed steam from the pressurizer maintains a very low fuel concentration in the essentially stagnant line connecting the pressurizer to the main circulating loop. An additional important function of the pressurizer is to provide a surge volume for fluid expelled from the reactor core during large power oscillations.

A bypass stream of high-pressure fuel solution may be circulated through the chemical plant via lines 166 and 167, using the pressure drop across the fuel heat exchanger as the driving force. (The chemical plant will be described in Chap. 7.) Valves HCV-141 and HCV-142 isolate the chemical plant from the reactor system when desired.

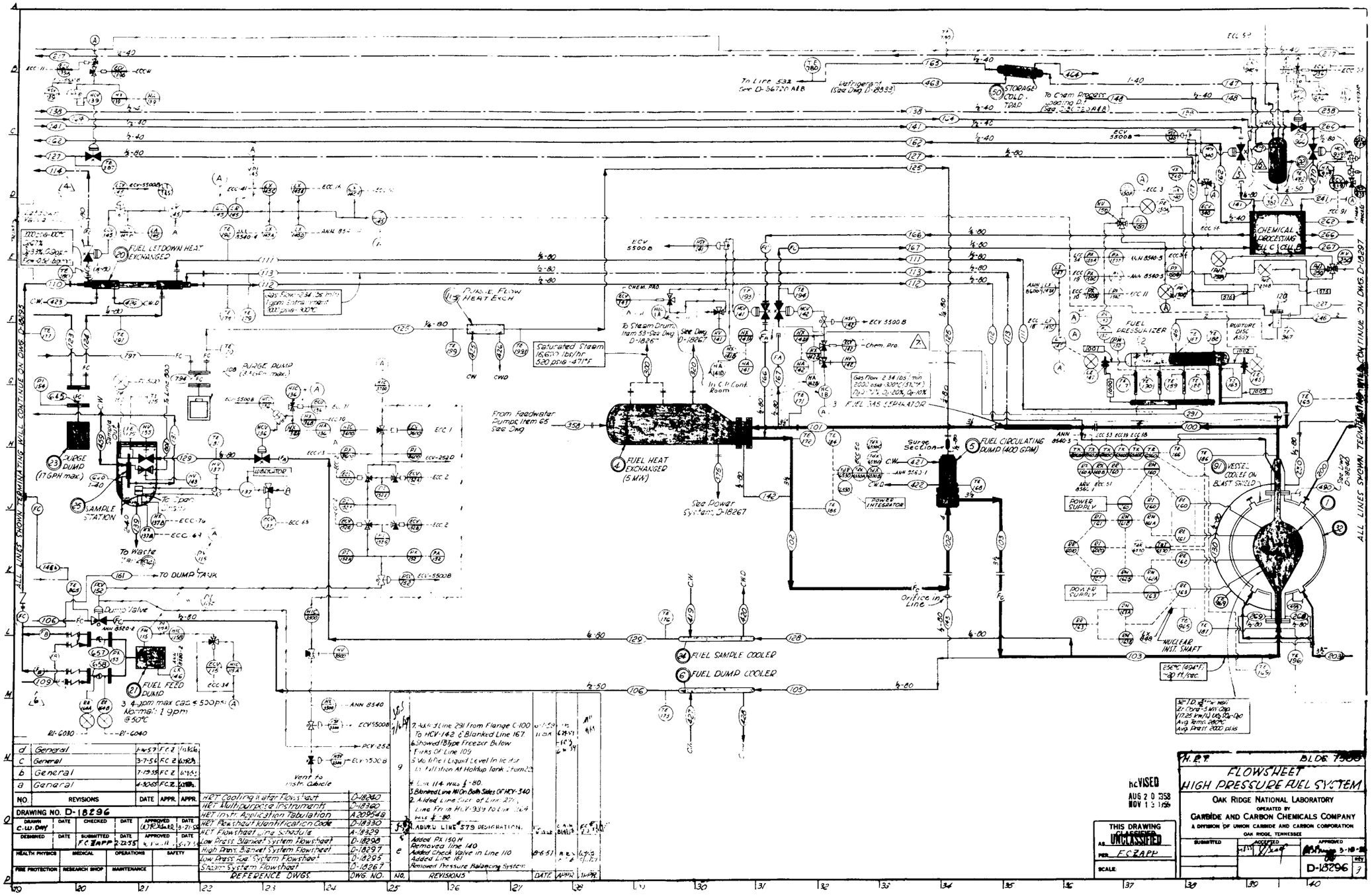

Fig. 2.2. High-Pressure Fuel System.

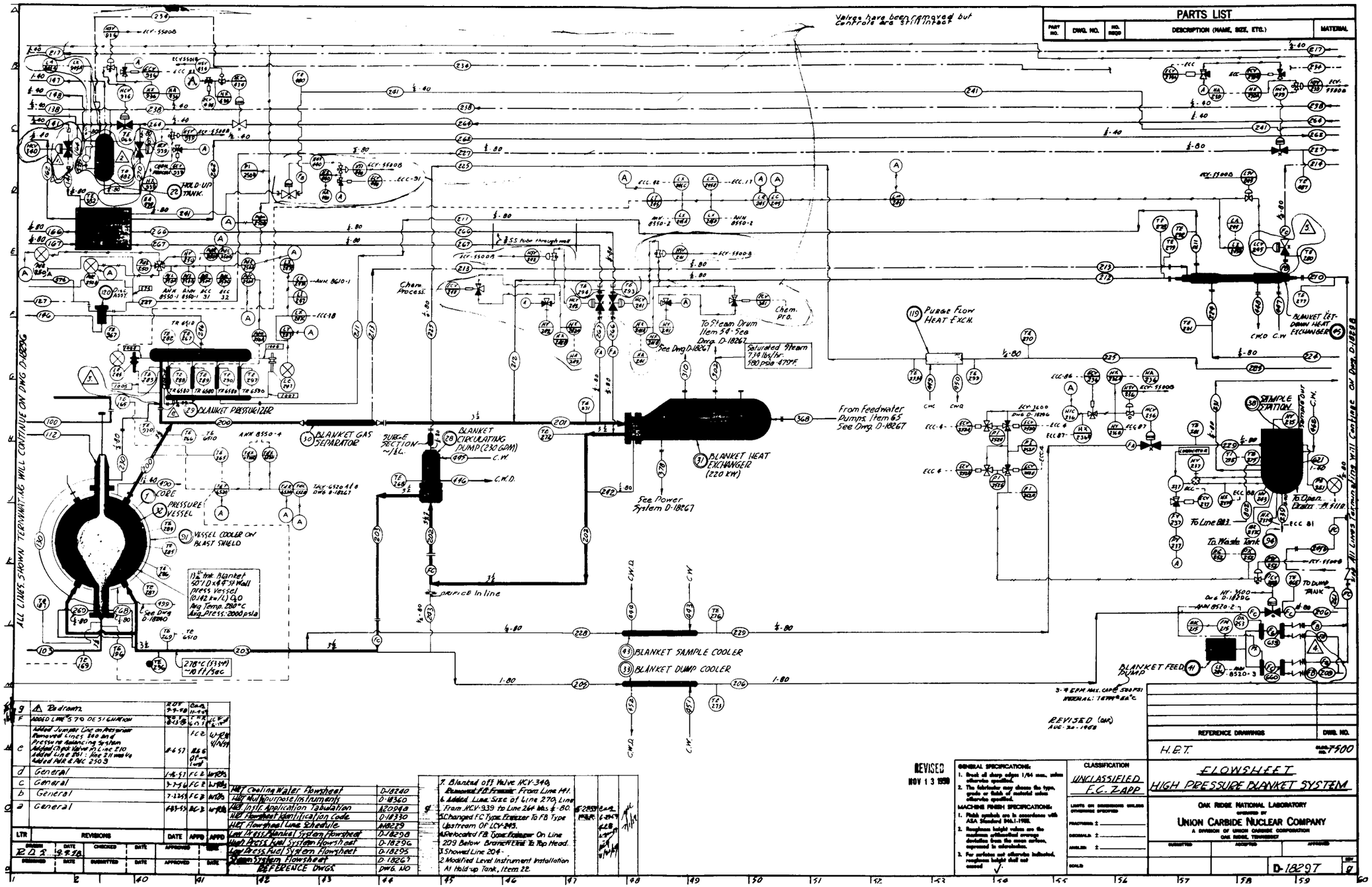

Fig. 2.3. High-Pressure Blanket System.

2.3.2 Blanket High-Pressure System

Functionally, the high-pressure blanket system flowsheet, shown in Fig. 2.3, is essentially identical to the fuel high-pressure system flowsheet; however, only the differences will be discussed.

The annular space between the outside of the core and the inside of the pressure vessel, item 32 (see Fig. 1.1), is the blanket region of the reactor. Blanket solution at 278°C, in this case D_2O at 97,000 lb/hr (230 gpm at 278°C), enters the bottom of the pressure vessel at two points from line 203 through nozzles which impart swirling flow to the inlet fluid. At core and blanket power levels of 5000 kw and 220 kw respectively, the fluid is heated to 282°C as it flows upward through the blanket region. The blanket outlet, line 200, is designed to promote circulation and to prevent accumulation of sedimentary solids on top of the core tank (see Fig. 3.1). Saturated steam at 560 psia (479°F) is produced in the blanket steam generator at a rate of about 735 lb/hr.

The blanket pressurizer (item 29), blanket gas separator (item 30), and blanket steam generator are almost exact duplicates of their counterparts in the fuel system. The blanket circulating pump (item 28) is identical to the fuel system circulating pump, except for the hydraulic portion, which was modified to produce 230 gpm at a developed head of about 55 ft of fluid.

2.4 REACTOR LOW-PRESSURE SYSTEMS

2.4.1 Fuel Low-Pressure System

The fuel low-pressure system flowsheet is shown in Fig. 2.4. Except for the size of the dump and storage tanks, the blanket low-pressure system is essentially the same as the fuel system.

The fuel low-pressure system has several purposes, the most important of which are:

1. To provide storage facilities for fuel solution and D_2O during normal operation and shutdown.
2. To provide a means of varying the fuel solution concentration in the high-pressure system.
3. To provide a supply of condensate for the pressurizer and for purging the circulating pump motor cavity.
4. To recombine radiolytic gases that are not recombined in the high-pressure system or that are produced in the low-pressure system.
5. To remove fission-product gases and excess oxygen from the reactor system.
6. To provide a means of determining and maintaining a system inventory.

Dissolved and entrained gasses are bled down continuously from the high-pressure system with about 1 gpm of liquid.[10] Leaving the gas separator (item 3) through line 113, the two-phase mixture passes through the letdown heat exchanger (item 20), where it is cooled from reactor operating temperature to about 80 to 90°C by giving up its heat to fuel and purge streams returning to the high-pressure system. The letdown heat exchanger functions will be further described later. Leaving the heat exchanger through line 114, the stream passes through the letdown valve (LCV-145), where the pressure is trottled to approximately atmospheric. Continuing its path via line 114, the gas-liquid mixture discharges into the dump tanks, items 7a and 7b (also shown in Fig. 3.68), through a highly efficient entrainment separator, item 7c (see Fig. 3.69). Capacity of the dump tanks is about 1000 liters; operating fuel solution inventory of a normal system is about 600 liters (total). Evaporators, consisting of steam-heated jacketed pipes, are attached to the dump tanks to provide continuous mixing of the solution, to evaporate D_2O to provide condensate for the high-pressure system and a means for concentrating the fuel solution, and to provide diluent steam for the prevention of an explosive mixture of radiolytic gases in the low-pressure system. The dump tanks are "operationally safe," that is, they cannot be made critical by using the entire inventory of fuel charged into the reactor.

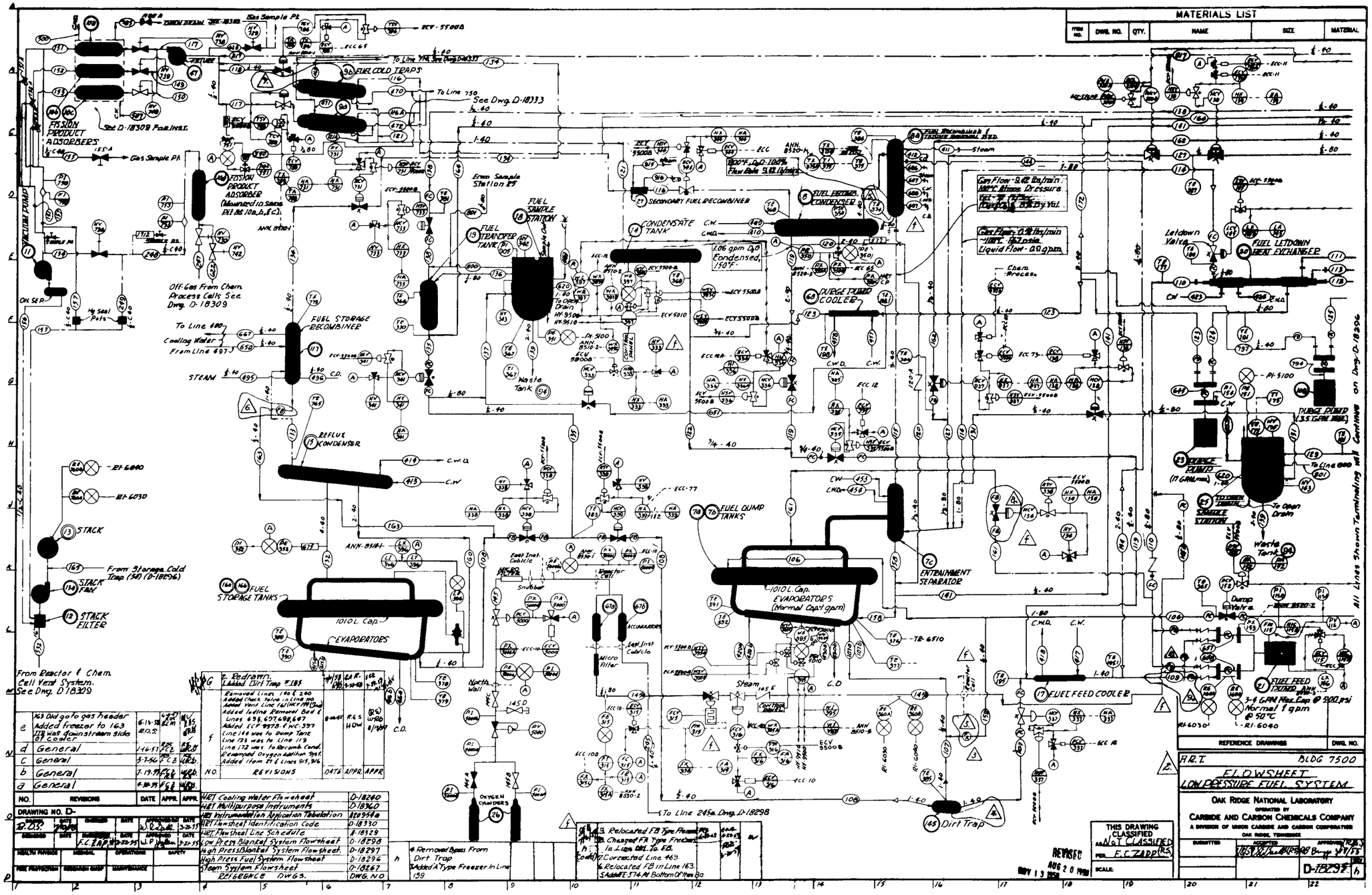

Fig. 2.4. Low-Pressure Fuel System.

The gas-steam mixture leaving the entrainment separator via line 115 flows upward to the recombiner and iodine bed, item 8a (see Fig. 3.71). The iodine bed, a late addition to the flowsheet and consisting of silver-coated stainless steel wire mesh, was added to prevent poisoning of the recombiner catalyst. Fission-product iodine, trapped as silver iodide, is held up in the bed until it decays to xenon, which then proceeds through the off-gas system. Cooling coils, imbedded in the wire mesh, remove the decay heat during reactor shutdown. During reactor operation the iodine bed is cooled by the gas-steam mixture passing through to the recombiner.

The gas-steam mixture, consisting of radiolytic gas, excess oxygen, diluent steam, and very small quantities of fission gases, principally xenon and krypton, flows through the recombiner, where platinized alumina pellets act as a catalyst for recombining the radiolytic gases. A steam coil imbedded in the catalyst bed is used to dry the bed before start-up. Leaving the recombiner at about 300°F, the superheated vapor-gas mixture enters the recombiner condenser (item 8), where the vapor is condensed and the noncondensable gases are cooled to about 130°F. (Gas flow out of the condenser will be traced later.) Condensate from the water-cooled shell-and-tube condenser normally flows back to the dump tank via lines 119 and 120. By manipulating the proper valves, however, the condensate may be diverted through line 122 to the weighed-condensate storage tank (item 14). With other conditions constant, the concentration of fuel in the reactor high-pressure system is adjusted by collecting condensate in the storage tank or by returning it to the reactor systems. Valves are also arranged to permit quick dilution of the high-pressure system by diverting the condensate through line 119 to the fuel feed pump (item 21). Condensate returned to the dump tanks from the condenser is mixed with the fuel solution stored there (about 100 liters).

Fuel solution from the dump tanks flows through a settling trap (item 145) and lines 107 and 109 to the fuel feed cooler (item 17), where it is cooled to about 50°C, and then to the intake of a diaphragm feed pump (item 21) for return to the high-pressure circulating system. Discharging from the feed pump through line 110, the returning fuel stream enters the letdown heat exchanger, where heat is recovered from the letdown stream (line 113). Leaving the letdown heat exchanger via line 112, the fuel solution from the low-pressure system reenters the high-pressure circulating stream at the top of the core tank outlet pipe. This particular location for the injection of returning fuel was chosen so that, if the circulating pump was not operating, fuel solution would flow into the core, thereby preventing a possible accumulation of concentrated fuel in the piping and a rapid introduction of that fuel into the core when the pump was started.

Excess oxygen is added to the circulating fuel system at a rate of about 1.5 liters/min (STP) to prevent the reduction of uranyl ions within the fuel solution and to prevent excessive corrosion of the stainless steel system.[10-15] This gas, supplied from oxygen cylinders (item 26)[16,17] via an accumulator (item 67a) and line 145, is introduced downstream of the feed pump (line 110).

Condensate from the condenser or condensate storage tank is returned via line 123 to the high-pressure system by two purge pumps (items 23 and 108) and the purge-pump cooler (item 68). One of the purge pumps (item 23) returns condensate to the fuel pressurizer through line 124, the letdown heat exchanger, where heat is recovered from the letdown stream (line 113), and line 111. The condensate fed to the pressurizer acts as a purge to prevent fuel solution from entering the heated section of the pressurizer. The other purge pump (item 108) returns condensate through line 125 to the high-pressure system at the fuel circulating pump. The condensate, fed to the back of the motor end of the pump, purges the rotor cavity of gas and fuel solution and lubricates the pump bearings.

It is seen from the process design description thus far that, during normal reactor operation, fuel solution, corresponding to the high-pressure circulating system concentration, is continuously let down to the low-pressure system. Dissolved and entrained gases are also bled down with the liquid stream. To counterbalance the removal of fuel solution by the letdown stream, concentrated fuel is continuously pumped from the dump tanks to the high-pressure system, and condensate from the condenser and/or condensate storage tank is continuously injected as purge through the pressurizer and the circulating pump. Thus the average temperature of the core is controlled (through

the concentration) by balancing the fuel letdown rate against the pump-up rates of concentrated fuel and the two condensate purge streams.

Noncondensable gases, mostly excess oxygen with small amounts of intensely radioactive fission products (principally xenon and krypton), pass from the recombiner condenser through line 116 to the secondary recombiner (item 27) and then to the cold traps (items 9a and 9b), where the gases are dried. The secondary recombiner, a small in-line unit filled with platinized stainless steel wire mesh, recombines any remaining traces of radiolytic gases in the off-gas stream. In addition to conserving D_2O, drying the off-gas stream enhances the capacity of charcoal to adsorb xenon and krypton, thus tending to minimize the adsorber bed volume. The cold traps, operating at about $-23°C$, are duplicated, in parallel, and the valves are operated on regular, timed cycles so that one unit is in service while the other is defrosting or is on standby. Leaving the cold traps through line 117, the dried off-gas stream passes through a holdup volume to the fission product adsorber units (items 10a, 10b, and 10c), where all species of xenon and krypton, except 10-yr Kr^{85}, are adsorbed and retained on activated charcoal long enough to decay to harmless levels. Effluent gases from the charcoal beds are filtered (item 12) and diluted with 1400 scfm of air before discharging to the atmosphere from a 100-ft-high stack (item 13). A flowmeter is provided to measure the gas flow rate.

A mercury seal pot and a vacuum pump (item 11) are provided in parallel in the line from the adsorber beds to the stack. The seal pot is provided to prevent water vapor from entering the adsorber beds with air from the atmosphere. The vacuum pump can be used to evacuate the reactor system for filling, to increase the off-gas flow rate, and to facilitate regeneration of the adsorber beds if the need arises. A radiation element (RE-760) is provided at the stack to monitor the level of activity of the gases discharged to the atmosphere. Provisions are made for installing a compressor (item 47) if a lower system pressure is desirable.

Storage tanks (items 16a and 16b), equal in size and capacity to the dump tanks, are provided for isolated storage of the fuel solution. Evaporators, essentially identical to the dump tank evaporators, are integrally attached to the storage tanks. Transfer of fuel solution via line 108 is accomplished by pressurizing either the dump or storage tanks by supplying heat to the appropriate evaporator. Valving is provided to permit sampling or transferring of the solution through line 135.

A reflex condenser (item 15) is provided to remove heat released by radioactive decay of fission products within the storage tanks. Radiolytic gases produced in the fuel storage tanks are recombined by the use of platinized wire mesh as a catalyst in the fuel storage recombiner (item 117). The effluent gas stream bypasses the cold traps via line 134, enters the off-gas stream (line 117) upstream from the fission product adsorber units, and passes on to the atmosphere. Condensate from the recombiner-condenser drains back to the storage tanks. Valve HCV-731 in the storage tank off-gas line (line 134) normally remains closed. However, the valve may be opened, thus permitting gas to be discharged directly to the adsorber beds if the pressure in the isolated storage tank becomes excessive.

Fuel solution in the high-pressure system can be passed to the dump tanks through lines 105 and 106 by opening valve PCV-152. The fuel dump cooler (item 6), located upstream of the valve, normally maintains the fuel solution in the dump line at about 150°C, which is above the temperature at which peroxide precipitation is expected.[12,14] An alternative drain path is through the fuel sampler.

Noncondensable gases which may accumulate in the pressurizer are vented to the low-pressure system via line 127. Two control valves, HCV-139 and PdCV-250A, are in line 127, one for throttling, the other for complete shutoff. In addition to venting gases from the pressurizer during normal operation, line 127 also serves to relieve the overpressure during the initial dumping phase.

Both high- and low-pressure system fluids can be sampled by the sample stations (items 18 and 25). Representative samples of the circulating streams are obtained by isolating a small volume (approximately 5 to 10 ml) in the sampler isolation chamber. A fuel-sample cooler (item 24)

is provided to control the fuel solution temperature[12,14] in lines 128 and 129, which serve the high-pressure sample station (item 25). After a sample is isolated in the chamber, the pressure is lowered by cooling and venting to the low-pressure system; and the sample is drained into an appropriate container. The container and sample are removed and placed in a remote shielded carrier for transfer to an analytical laboratory. Since the fluid that was circulated through the sample station (prior to isolation) is discharged to the dump tank, an alternate path for draining the high-pressure system is thus provided through the sampler. A similar procedure is followed to obtain low-pressure system samples from the low-pressure sampler (item 18).

A transfer tank (item 19), associated with the low-pressure sampler for collection of the fluid circulated through the station prior to isolation, may also be used to make small batch transfers of fuel and/or condensate to the blanket system.[18] Fluids may be added or removed from the system by the transfer tank via the holdup tank, line 148, and the Chemical Processing Loading Pit.

The condensate storage tank and the dump tanks are installed with weighing devices to provide an accurate measure of the contents for inventory purposes.

2.4.2 Blanket Low-Pressure System

As pointed out previously, the low-pressure blanket system, shown in Fig. 2.5, is almost identical with the fuel low-pressure system. The major differences in the two systems will be pointed out without discussion.

The size of the blanket dump and storage tanks is increased to accommodate the much larger system volume. (Normal blanket system operating inventory is about 1715 liters; dump tanks and and storage tanks provide for a capacity of 2880 liters.) No provisions are made for the recombination of radiolytic gases present in the storage tanks; the gases are vented through the storage cold trap (item 50) directly to the stack.

Since the blanket system was not designed for operation with fuel and continuous letdown, it was not provided with an iodine adsorption bed.

2.5 WATER COOLING SYSTEMS

2.5.1 General

The three water cooling systems supply coolant to the reactor and chemical processing plants and their auxiliary equipment for the purposes of: (1) supplementing the air-cooled condenser and the turbine condenser in removal of heat produced by the reactor; (2) condensing steam in the turbine condenser; (3) cooling process streams for metering, sampling, and pumping operations; (4) cooling reactor equipment to prevent damage due to overheating; (5) condensing heavy water vapors as part of fuel concentration control; (6) removing fission product decay heat during operation and shutdown; and (7) cooling the cell air.

To prevent contamination of the ORNL potable water supply, three separate water cooling systems are provided: (1) a closed-loop demineralized-water cooling system in the reactor cell, (2) an open-loop cooling tower system using potable water, and (3) a once-through potable water system for a few special cooling applications. The use of potable water as the coolant and the use of an air break to prevent contamination of the water supply was considered in an early design of the water cooling systems.[19] However, since the potable water contains chloride and oxygen, the possibility of chloride-induced stress corrosion made it necessary to provide a closed-loop demineralized-water cooling system for stainless steel components located within the reactor cell.[20,21] Heat from the demineralized-coolant system is transferred to the cooling

tower system for final dissipation to the atmosphere. For certain cooling applications, it is advantageous to utilize the coldest water available at the site; therefore these coolers are connected directly to the potable water supply headers. (These applications are discussed in Sec 2.5.3.)

2.5.2 Demineralized-Water System

The demineralized-water cooling system (shown in Fig. 2.6) is a closed-loop, circulating-coolant system which uses high-purity, chloride-free condensate as the coolant.[21] The system serves essentially all of the stainless steel components in the reactor cell. A 300-gpm centrifugal pump (item 124a) circulates the coolant; a similar pump (item 124b) is available for standby service. Heat is dissipated to the cooling tower water system by a shell-and-tube heat exchanger (item 125). A surge and expansion tank (item 122) accommodates coolant volume changes.

Makeup water for the demineralized-coolant system is supplied to the surge tank (item 122) by gravity via line 836 from two 500-gal condensate storage tanks (items 130a and 130b). The level in the surge tank is automatically controlled. The condensate storage tanks are also the source of water for all uses at the site that require high-purity, chloride-free water, such as filling the reactor and/or chemical plant systems for shakedown operation prior to filling the systems with heavy water. Condensate for these uses is produced by condensing 100-psi building steam (from the ORNL steam plant) in a water-cooled shell-and-tube condenser (item 133). Cool water is supplied to the condenser from the potable water header No. 1 through line 859. Under normal operating conditions, the condensate tanks are adequate for making up losses from the demineralized-water system. However, under emergency conditions, cooling tower water can be supplied to the system through line 840 by opening valve FCV-635.

In reality, the shell-and-tube heat exchanger (item 125) may be considered as two single-pass, shell-and-tube units connected for series-counterflow operation. The cooling tower water enters the tube side of the unit at about 90°F, at a flow rate of 435 gpm, and exits at about 111°F. The demineralized water enters the shell side at about 130°F, at a flow rate of 300 gpm, and exits at about 100°F. (These temperatures and flow rates are estimates for 10 Mw reactor power in warm weather.[21])

Certain coolers require demineralized coolant at temperatures above and below the 100°F outlet temperature of the heat exchanger. Two small exchangers are provided for these requirements; one unit, the purge pump coolant heat exchanger (item 123), cools about 2 gpm from 100°F to 90°F (by use of potable water at about 80°F) for use in the fuel and blanket purge pump coolers (items 68 and 48 respectively). Since the pumping rates of the purge pumps are inferred from a coolant heat balance across the purge pump coolers,[22] a coolant temperature lower than that available from the demineralized-water heat exchanger is required to give temperature differentials of sufficient magnitude to reliably indicate pumping rates. The other special unit, the demineralized-water heat exchanger (item 127), is used to heat about 18 gpm (maximum) to 160°F with process steam. The 160°F coolant is supplied to the fuel and blanket purge-flow heat exchangers (items 118 and 119 respectively), to the fuel dump cooler (item 6), and to the fuel sample cooler (item 24). The fuel dump and sample coolers require warm water to prevent uranium peroxide precipitation in the fuel normally held up in these units, thus preventing possible blockage of the lines.[12,14,15]

A list of components using 100°F demineralized-water coolant and the expected maximum flow rates for 10-Mw operation is given in Table 2.3.

Cooling water for reactor components is supplied to two 4-in. headers (located outside the reactor cell) from the demineralized-water heat exchanger (item 125) through line 839. One header (line 497) supplies the fuel system components; the other header (line 498) supplies the blanket system components. With the exception of the fuel and blanket recombiner condensers

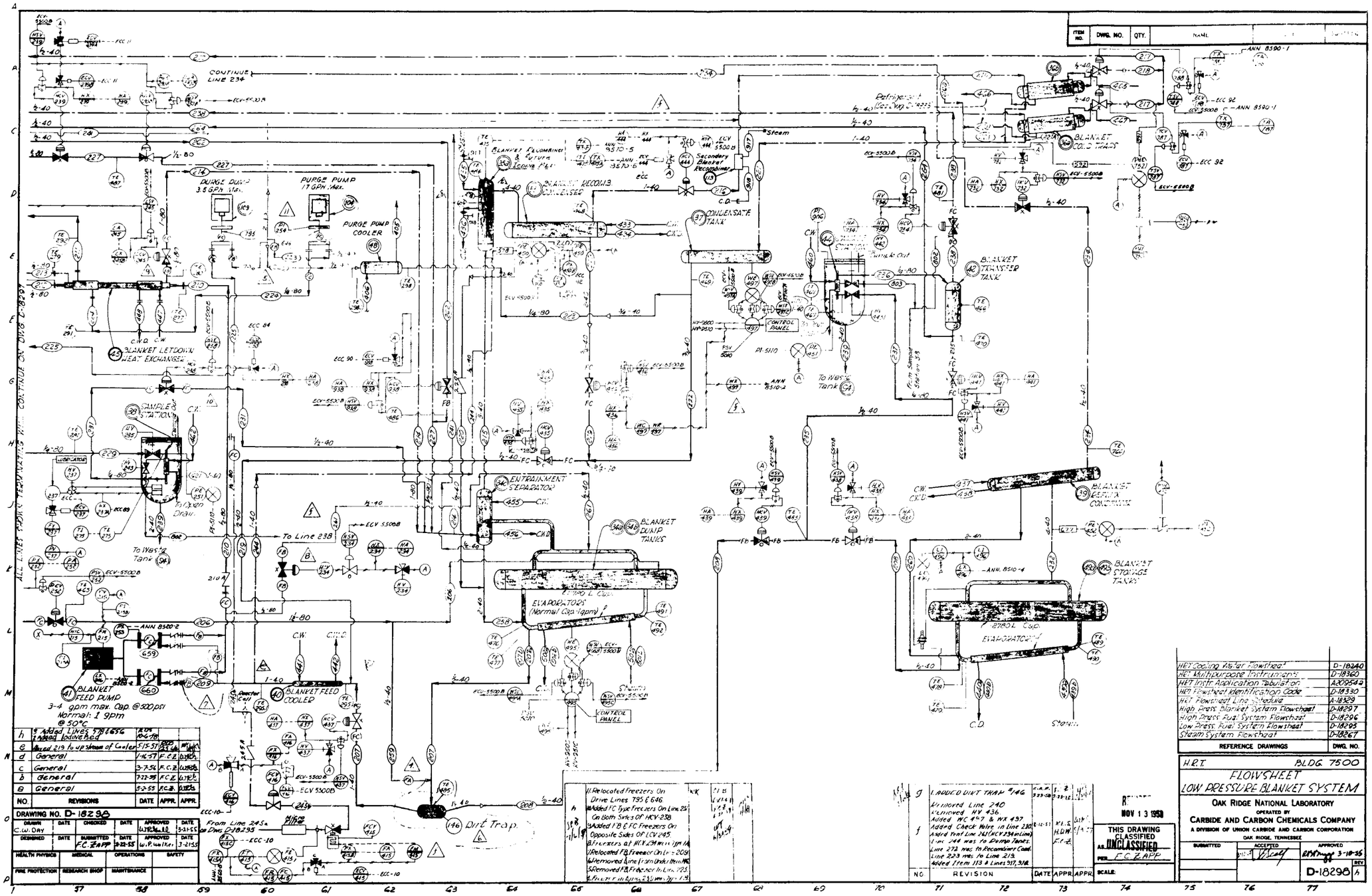

Fig. 2.5. Low-Pressure Blanket System.

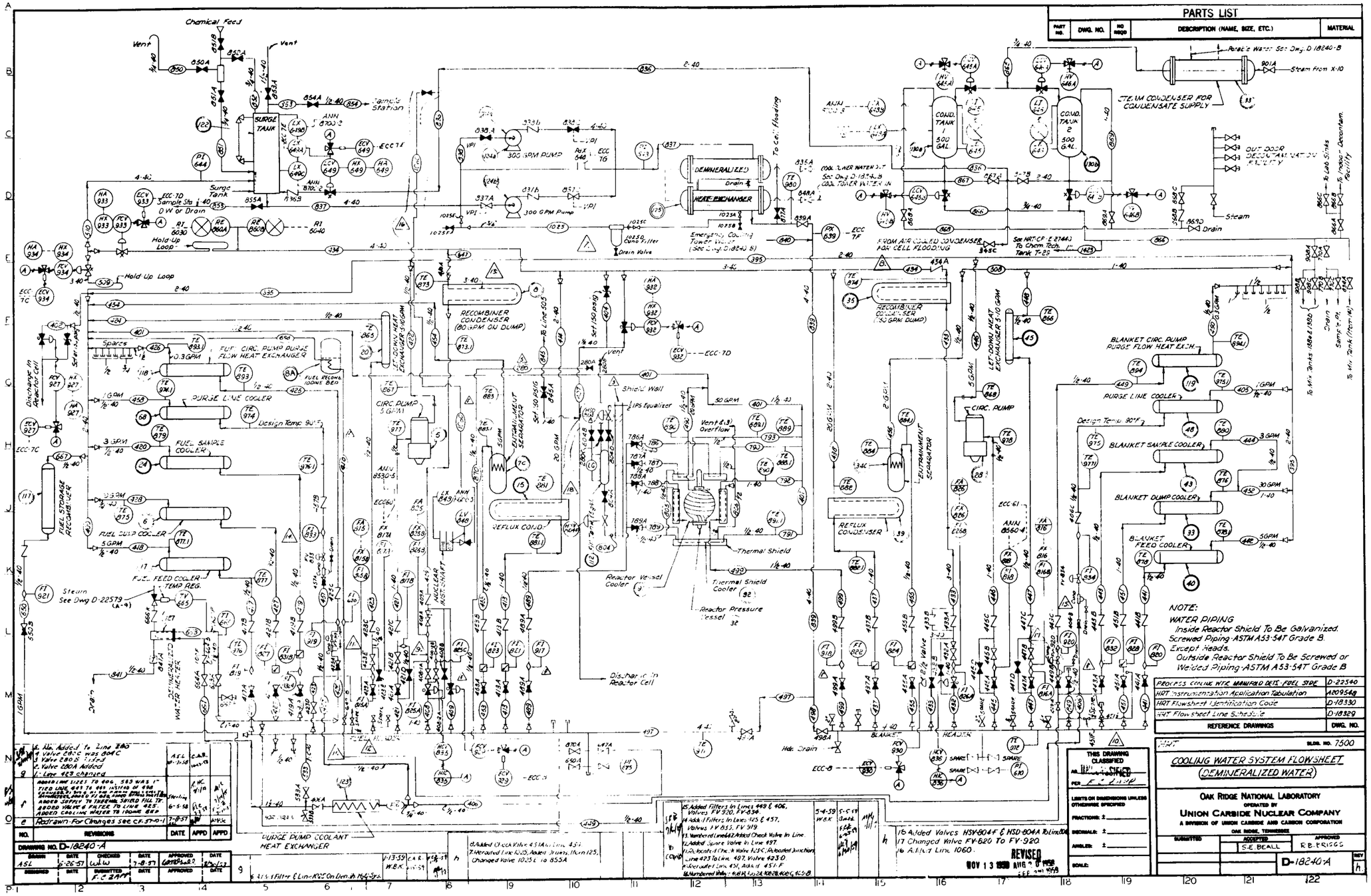

Fig. 2.6. Demineralized-Water Cooling System.

Table 2.3. Reactor Components Which Use 100°F Demineralized-Water Coolant

Item No.	Component	Approximate Flow Rate (gpm)
92	Thermal shield	40
91	Reactor vessel cooler	20
5	Fuel circulating pump	5
28	Blanket circulating pump	5
20	Fuel letdown heat exchanger	5
45	Blanket letdown heat exchanger	5
7c	Fuel entrainment separator	5
34c	Blanket entrainment separator	2
8	Fuel recombiner condenser	15 (80 at dump)
35	Blanket recombiner condenser	15 (150 at dump)
17	Fuel feed cooler	5
40	Blanket feed cooler	5
33	Blanket dump cooler	40 (at dump)
43	Blanket sample line cooler	8
15	Fuel storage tank reflux condenser	20
39	Blanket storage tank reflux condenser	20

(items 8 and 35 respectively), all the service lines from these headers into the reactor cell have manually operated valves for shutoff and throttling. The supply lines to the recombiner condensers have control valves remotely operated from the control room, HCV-835 (fuel system) and HCV-836 (blanket system), and quick-opening high-capacity bypass valves, FCV-929 (fuel system) and FCV-930 (blanker system), which automatically open on a dump signal. All the supply lines have check valves to prevent backflow of coolant, possibly contaminated, into the control area.

The return lines from the two recombiner condensers discharge into a common header, line 434, while the return lines from all other equipment in the cell (using demineralized cooling water) discharge into another common header, line 509. These headers, located inside the cell, pass through the cell wall into a shielded compartment (the west valve pit), where each header has a 3-sec holdup loop, a shutoff valve (FCV-933 and FCV-934 on lines 434 and 509 respectively), a discharge valve (FCV-932 and FCV-927 respectively), and a bypass relief valve set at 150 psi. Following the valving arrangement, the two headers are joined to from line 510, which discharges into the surge tank. The circulating pump takes its suction from the surge tank and discharges to the demineralized-water heat exchanger to complete the circuit.

The purpose of the valving arrangement is to prevent the return to the surge tank of any radioactivity which may find its way into the cooling system during an emergency and to provide for continued cooling during shutdown for such an emergency by discharging the demineralized cooling water into the reactor cell. During such an event, water stored in the condensate tanks would be exhausted; then valve FCV-635 in line 840 would open, thus interconnecting the cooling tower coolant system and the demineralized-water system. With this interconnection made, potable water is supplied to the necessary coolers, first from the cooling tower basin (15,000 gal) and then from the potable-water supply to the basin. (The basin forms an air break in the potable-water supply.)

The relief valves (set at 150 psi) are provided in parallel to the discharge valves (FCV-927 and FCV-932) to ensure venting in case of instrument failure. Loss of pumping capacity in the closed loop system, through either power or pump failure, will cause the block valves to close and the diversion valves to open.

Thermocouples are installed at various points in the system to provide temperature data for operation, heat balance calculations, and solution flow-rate calculations. For accurate measurement of temperature, individual thermocouples are generally located on the inlet and outlet water lines, close to the heat exchanger equipment. A number of pressure indicators and switches are provided to facilitate operations. All service lines into the reactor cell from the demineralized-water headers are provided with a flow indicating device of at least one of the following types:

a. Uncalibrated swinging-vane indicator for visual flow indication where quantitative measurements are not essential.

b. Calibrated rotameter-type flow indicators where quantitative flow measurement is necessary, but control, alarm, or remote indication is not required.

c. Calibrated rotameter-type flow indicators where quantitative flow measurement is necessary and control, alarm, and/or remote indication are required. These flow indicators are equipped with switches for energizing appropriate electrical circuits.

The type indicator used in each of the service lines to the reactor components is given in Table 2.4.

Table 2.4. Types of Flow Indicators in Demineralized-Water Supply Lines

Item No.	Component	Indicator Type (see text)	Remarks
5	Fuel circulating pump	c	Type b in bypass supply
6	Fuel dump cooler	a	
7c	Fuel entrainment separator	a	
8	Fuel recombiner condenser	b and c	In series in normal supply
8a	Fuel recombiner iodine bed	b	
15	Fuel storage tank reflux condenser	a	
17	Fuel feed color	b	
20	Fuel letdown heat exchanger	b and c	In series
24	Fuel sample cooler	a	
28	Blanket circulating pump	c	
33	Blanket dump cooler	a	
34c	Blanket entrainment separator	a	
35	Blanket recombiner condenser	b and c	In series in normal supply
39	Blanket storage tank reflux condenser	a	
40	Blanket feed cooler	b	
43	Blanket sample cooler	a	
45	Blanket letdown heat exchanger	b and c	In series
48	Blanket purge pump cooler	b	
68	Fuel purge pump cooler	b	
91	Reactor vessel cooler	b	
92	Thermal shield cooler	b	
117	Fuel storage-tank recombiner	b	
118	Fuel purge-flow heat exchanger	b	
119	Blanket purge-flow heat exchanger	b	

2.5.3 Potable-Water System

The potable-water system, shown by Fig. 2.7, supplies coolant to certain coolers directly in order to achieve lower temperatures. Table 2.5 lists the components, the expected maximum flow rates (at 10-Mw reactor operation), and coolant disposition to which potable water is supplied directly.[21] It is noted that all cooling water to the reactor cell and the chemical plant cell is supplied from their respective demineralized-water systems except for the potable water supplied to the cell space coolers.

Most potable cooling-water requirements are satisfied by an open-loop, recirculating system with a cooling tower (item 61) for dissipation of the heat. A centrifugal pump (800-gpm, 110-ft head, item 62a) circulates the water through the system. A similar pump (item 62b) is provided for standby service.

The tower is rated to cool 800 gpm of water from 135°F to 90°F with ambient air at 80°F wet bulb, a heat dissipation rate of 7.2×10^6 Btu/hr.[23] A 15,000-gal basin, included in the design of the induced-draft, counterflow cooling tower, provides an air break in the circulating system. Normal makeup for losses is about 35 gpm,[21] supplied as discharge from certain coolers as indicated in Table 2.5. An overflow (line 383) to an open drain and a float-operated valve (398-C) in the supply (line 398) serve to hold the water level constant in the basin. A bypass valve (398-B) is provided for quick filling. A control valve (FCV-931) in the cooling water return (line 393) is provided for bypassing or partially bypassing the tower spray nozzles to control the coolant temperature in cold weather and to prevent ice formation on the tower. Stainless steel filter screens are installed in the cooling tower exit lines to protect the system from debris.

Components utilizing the cooling tower potable water system and the expected flow rates (at 10-Mw reactor operation) are: the demineralized-water heat exchanger (item 125), 434 gpm; turbine condenser (item 59), 318 gpm; turbine oil cooler (item 134), 20 gpm; and the deaerator vent condenser (item 64), 28 gpm.[21]

Table 2.5. Components Utilizing Potable Water as Coolant

Item No.	Component	Estimated Flow Rate (gpm)	Discharges to
82a,b,c,d	Reactor cell space coolers	100	Open drain
	Chemical plant space cooler	3	Open drain
75	Reactor refrigeration condenser	15	Cooling tower
	Chemical plant refrigeration condenser	15	Open drain
18 and 25	Fuel sample station coolers	2	Open drain
38 and 44	Blanket sample station coolers	2	Open drain
123	Purge pump coolant heat exchanger	4	Cooling tower
80 and 90	Waste evaporator, entrainment separator, and condenser	50	Open drain
10	Charcoal adsorber beds	10	Open drain
	Chemical plant demineralized-water cooler	15	Cooling tower
131	Fuel feed-pump oil coolers	2	Cooling tower
132	Blanket feed-pump oil cooler	2	Cooling tower

Potable water, used for filling the reactor cell prior to performing underwater maintenance operations, is supplied through filters (items 128a and 128b) via line 386 to chemical plant cell A, from where it is distributed to the reactor cell through lines 528 and 529. A 1000-gpm dewatering pump (item 99), located in cell A, is used to pump the water from the reactor cell to a holding pond following maintenance operations. A system of spray nozzles, located inside the reactor cell for emergency use, is also fed from line 386 in cell A.

In addition to the cooling-water and cell-flooding requirments, the potable-water system supplies the normal needs of building personnel.

2.6 REACTOR STEAM SYSTEM

The main purpose of the reactor steam system,[24-27] shown in Fig. 2.8, is to dissipate in an economical manner the heat generated in the reactor core and blanket. Design data given on the flowsheet regarding steam conditions, heat and flow rates, etc., are for a reactor core power level of 5 Mw. However, it is pointed out that the steam conditions, which are a function of reactor power level and temperature and flow rates of the reactor solutions, change with operating conditions. Detailed discussions, recommendations, and design requirements of the steam system are presented in refs 28–32.

Saturated steam is generated on the shell side of U-tube, horizontal, reboiler-type steam generators (items 4 and 31) located inside the shielded reactor containment cell. Steam drums (items 53 and 54) and automatic stop valves (HCV-537 and HCV-538) are located in a shielded compartment outside the primary containment vessel. The steam drums are sized to delay the steam for 1 to 3 sec in the shielded compartment. Radiation detectors are provided to monitor the steam for radioactivity. If activity is detected in the steam as it enters the shielded compartment (lines 300 and 302), a signal to close the automatic stop valves in lines 301 and 303 (they close in less than 1 sec) is transmitted to the control center. The signal also causes the feed-water control valves (LCV-545 in line 358 and LCV-546 in line 368) and the blowdown control valves (HCV-539 in line 375 and HCV-540 in line 378) to close, thus preventing the spread of radioactivity to the unshielded portions of the reactor steam system.[33]

Steam produced in the fuel-system heat exchanger (item 4) is either throttled to the turbine (item 57, originally used in HRE-1 and retained for use in HRE-2) or bypassed to an air-cooled condenser (item 60). Since generation of electrical power was not an objective of HRE-2 (see Sec 1.2), an air-cooled condenser (item 60), capable of dissipating 10 Mw of heat, was provided as a steam-killer for the reactor. However, it was decided to incorporate the existing 345-kva turbine-generator set into the reactor steam system for generation of emergency power.[24]

Pressure-controlled throttling valves, PCV-552A in line 317 and PCV-552B in line 316, are provided in parallel to accept the wide variations in steam flow through line 334 to the turbine. Parallel throttling valves, HCV-536A in line 311 and HCV-536B in line 312, are also provided to bypass steam from the fuel-system heat exchanger to the air-cooled condenser through line 328. Both lines 328 and 334 contain orifices and calorimeter connections for obtaining heat-balance data.

Steam generated in the blanket-system heat exchanger (item 31) flows only to the air-cooled condenser. Differential-temperature-controlled throttling valves, TdCV-6520A in line 314 and TdCV-6520B in line 313, are provided in parallel to control the steam flow through line 331 to the air-cooled condenser. The signal for manipulating these valves is derived from a temperature differential controller (TdC-6520) which maintains the blanket outlet temperature the same as the core average temperature. An orifice and a calorimeter connection are also provided in line 331 for heat-balance data.

A valved jumper connection (line 255) is provided between the two main steam lines (301 and 303). Normally the jumper is valved off; however, the two steam lines can be interconnected.

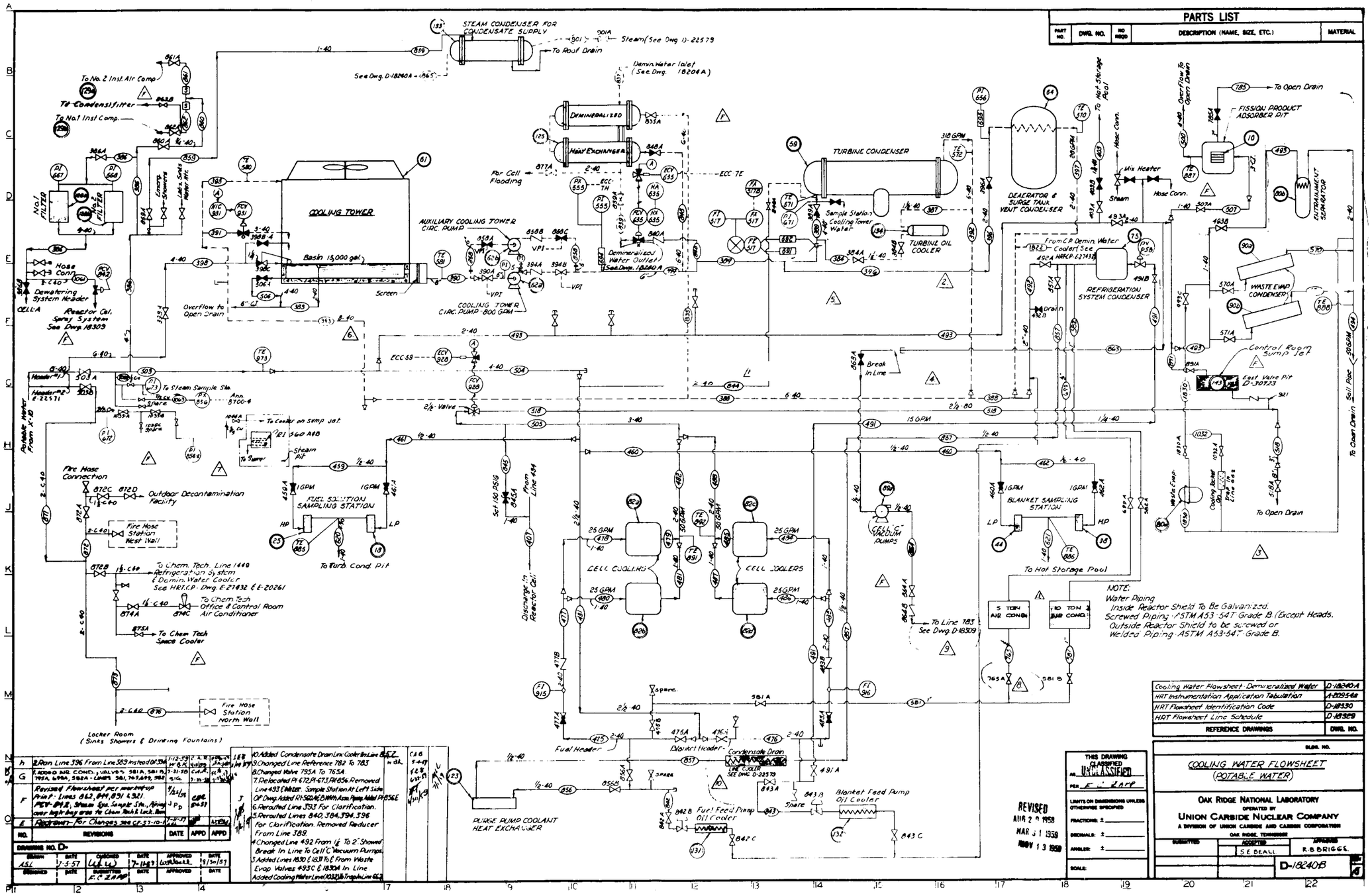

Fig. 2.7. Potable-Water Cooling System.

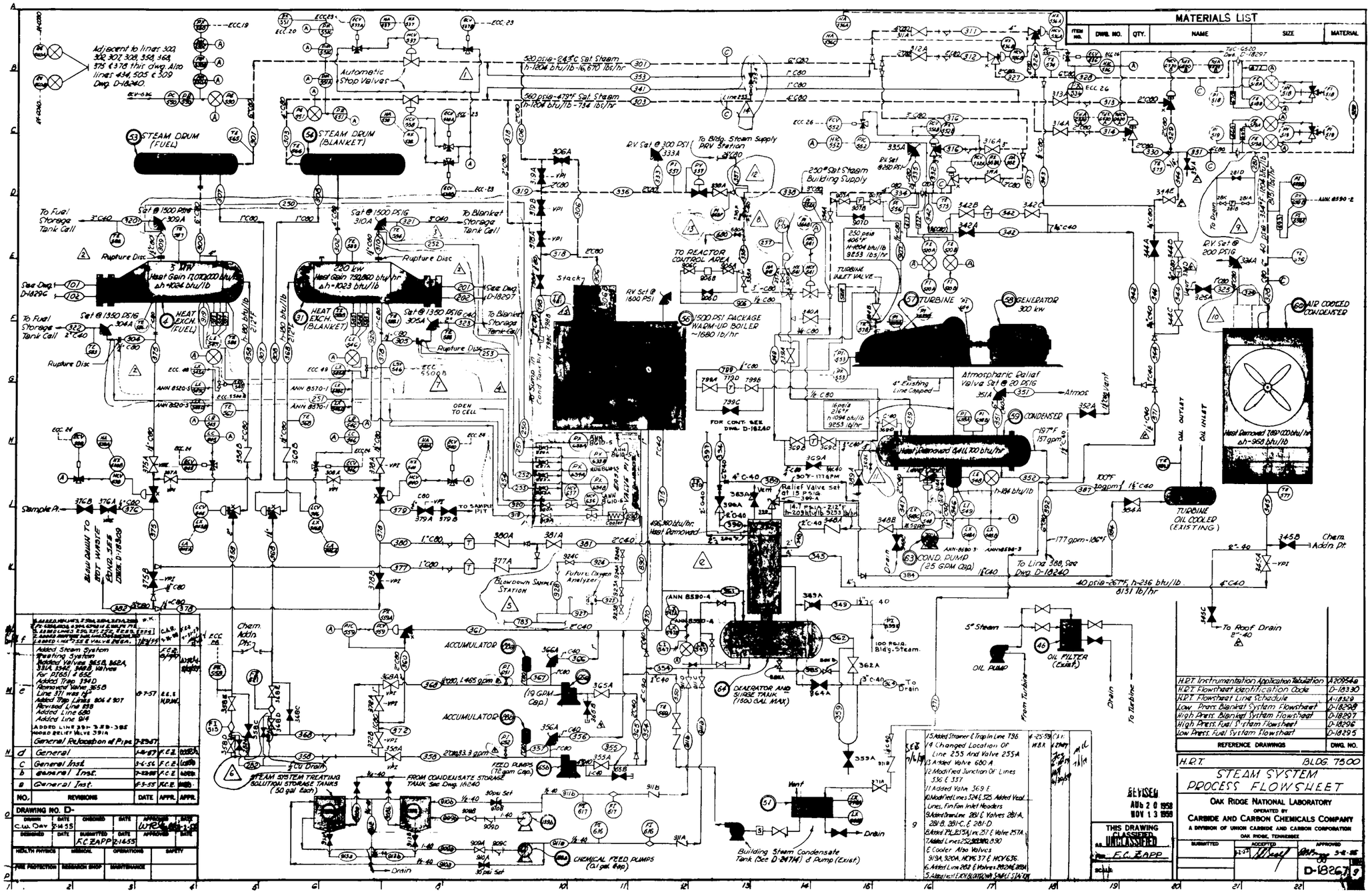

Fig. 2.8. Steam System.

After passing through the turbine, the expanded steam is condensed in the turbine condenser (item 59), and a hot-well condensate pump (item 63) returns the condensate through lines 346 and 348 to the deaerator and surge tank (item 64). Condensate from the air-cooled condenser is also discharged directly to the deaerator through line 345. The deaerator strips the condensate of gases which would otherwise induce excessive corrosion in the steam generators and connecting pipes. Building steam (at 100 psig) normally supplied to the deaerator provides the makeup for the feedwater system (see Sec 2.9). If additional makeup is needed, building steam can be admitted to the turbine condenser through line 339. Cooling water is supplied to the vent condenser of the deaerator from the cooling tower water system through line 396.

Feedwater is returned to the two steam generators from the deaerator by two high-pressure, triplex feedwater pumps (items 65a and 65b). The pumps, one of which has a 19-gpm capacity, the other a 72-gpm capacity, are driven by manually adjusted, variable-speed drives. The feedwater control valves, LCV-545 in line 358 and LCV-546 in line 368, are interlocked with the steam-generator liquid-level controllers to prevent rapid introduction of feedwater during startup operations and to maintain a constant liquid level during normal operations. Excess pumpage is returned to the deaerator through a back-pressure-controlled valve, PCV-559 in line 361, which can be manually adjusted to minimize pumping power. Accumulators (items 88a and 88b) are provided on the pump discharge lines to dampen pressure pulsations. The valving arrangement is such that either pump can serve both steam generators. Provisions for metering chemicals for feedwater treatment are included on the upstream side of the feedwater pumps.[34,35] (See Sec 3.11 for treatment.)

The steam generators are provided with steam relief valves, set at 1500 psig, which vent to the reactor cell. Since the operation of these relief valves would impose a large power demand on the reactor, liquid relief valves, set at 1350 psig, are provided on each steam generator. These valves also vent to the reactor cell. In order to prevent leakage and unnecessary functioning of the relief valves, rupture disks, rated for the relief valve settings, are installed immediately preceding the relief valves. The space between the rupture disk and the relief valve is provided with a pressure tap and an alarm to indicate leakage through the disk. Pressure relief valves, which relieve to the deaerator, are provided on the discharge side of the feedwater pumps.

During normal operation, condensate collected in the steam drums is returned to the steam generators by gravity. At power levels above about 7.5 Mw in the core and 3.5 Mw in the blanket, the pressure losses will prevent gravity return of the condensate, and it will be necessary to flash the condensate through steam traps to the deaerator.[36]

An oil-fired package boiler (item 56) capable of producing about 1680 lb/hr of 1500-psig saturated steam, is provided at the reactor site for preheating the fuel and blanket systems prior to startup and for use during lower-power nuclear operations.[37] For startup, steam from the package boiler is condensed on the shell side of the steam generator by circulating reactor solutions through the heat exchanger tubes. Similarly, 250-psig building steam, supplied from the ORNL steam plant, can be used to preheat the reactor systems and/or operate the turbine-generator for emergency power.

2.7 WASTE AND VENT SYSTEMS

The basic requirements of waste and vent systems, shown in Figs. 2.9 and 2.10, are as follows:[38]

a. To provide facilities for handling, concentrating, and storing waste solutions.

b. To provide facilities for safely storing and discharging process off-gases.

c. To provide for adequate venting and evacuation of the reactor and chemical plant cells.

d. To provide for flooding and deflooding of the reactor and chemical plant cells for maintenance operations.

Large volumes of liquids with low levels of activity are discharged from the containment cell directly to a 300,000-gal waste-storage pond (item 95) for subsequent precipitation of activity and controlled drainage to the Clinch River via Melton Branch and White Oak Creek. Liquids containing appreciable quantities of activity are jetted to a 12,000-gal storage tank (item 94) for subsequent concentration and disposal.

A waste evaporator (item 80a), capable of evaporating 1.5 gpm, is provided for concentrating the high-level activity wastes. The liquid is jetted from the storage tank to the evaporator through lines 550 and 552. Concentrated waste is transferred from the evaporator through line 569 to a shielded carrier for disposal or further processing. Vapors from the evaporator proceed through line 566 to an entrainment separator (item 80b), where the entrained liquid is removed and returned to the evaporator through line 567. The vapors continue from the separator to the waste evaporator condensers (items 90a and 90b) via line 568, where they are condensed. The condensate is discharged via line 548 to a 1000-gal holding tank (item 93), from which it can be jetted to either the 12,000-gal storage tank or the waste storage pond, depending on the condensate activity level. Overflow from the waste evaporator is returned to the 12,000-gal tank via line 662 for recycle.

Waste liquid from the following sources discharge directly to the 12,000-gal tank:

a. Fuel and blanket sampler station via lines 139 and 239.

b. Waste evaporator shield sump jet via lines 573 and 662.

c. Off-gas stack via lines 619, 559, and 550.

d. Waste evaporator overflow via line 662.

The following sources discharge directly to the waste pond:

a. Hot storage-pool sump jet (line 782) and overflow drain (line 783). (The hot storage pool is provided for temporary storage of radioactive components during maintenance operations.)

b. Waste system valve pit sump jet via lines 784 and 783.

c. Dewatering pump (item 99) discharge, line 519.

d. Chemical plant operating galleries (cells A and D) sump jets, lines 536 and 537.

e. East valve pit overflow drain, line 631.

f. Waste evaporator loading pit sump jet, line 783A.

Valving is provided to discharge wastes to either the 12,000-gal storage tank or the waste pond from the following sources:

a. Reactor cell sump jets via lines 520 and 521.

b. Chemical plant cells B and C sump jets via lines 514 and 515.

c. East valve pit sump jet, line 634.

d. Reactor heat exchanger blowdown condensate, line 382.

e. Condensate from the 1000-gal waste condensate tank, line 560.

f. Chemical plant loading pit sump jet, line 538.

In the event of a major discharge of reactor process fluids into the cells, it may be desirable to recover the fluids for processing without resorting to the use of the waste evaporator system. Scavenger lines are provided from the reactor cell and chemical plant cells (B and C) sumps for such an emergency. The scavenger lines (522, 523, 512, and 513) terminate in the east valve pit with welded pipe caps. If the need arises, the end caps can be cut off and temporary equipment installed to recover the spilled solutions.

The process off-gas system was described with the low-pressure fuel system.

The reactor and chemical plant cells are evacuated to 7.5 psia during normal operation via lines 543, 544, and 545 by two vacuum pumps (items 89a and 89b). Two 8-in. lines (516 and 517)

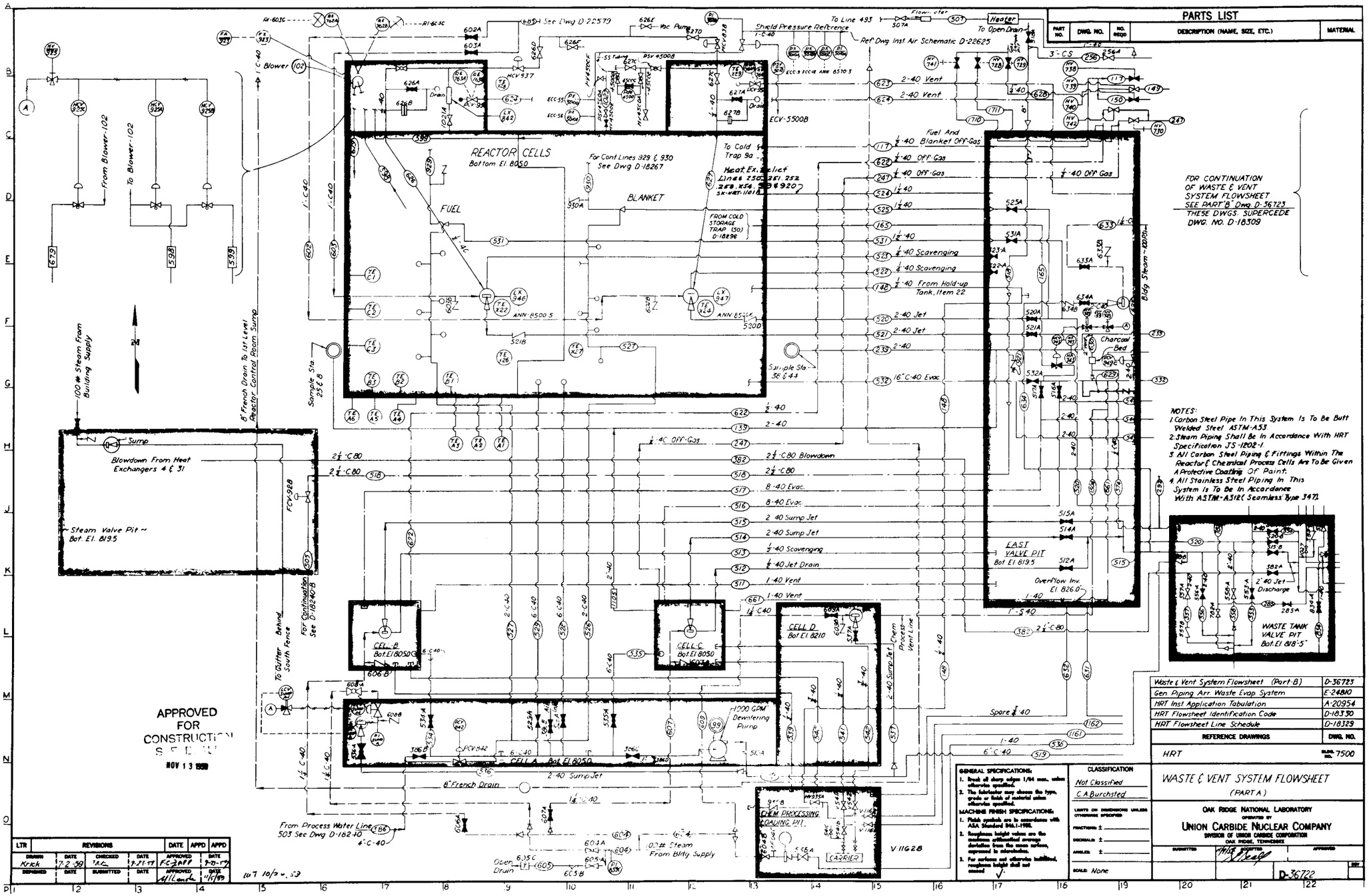

Fig. 2.9. Waste and Vent System (Part A).

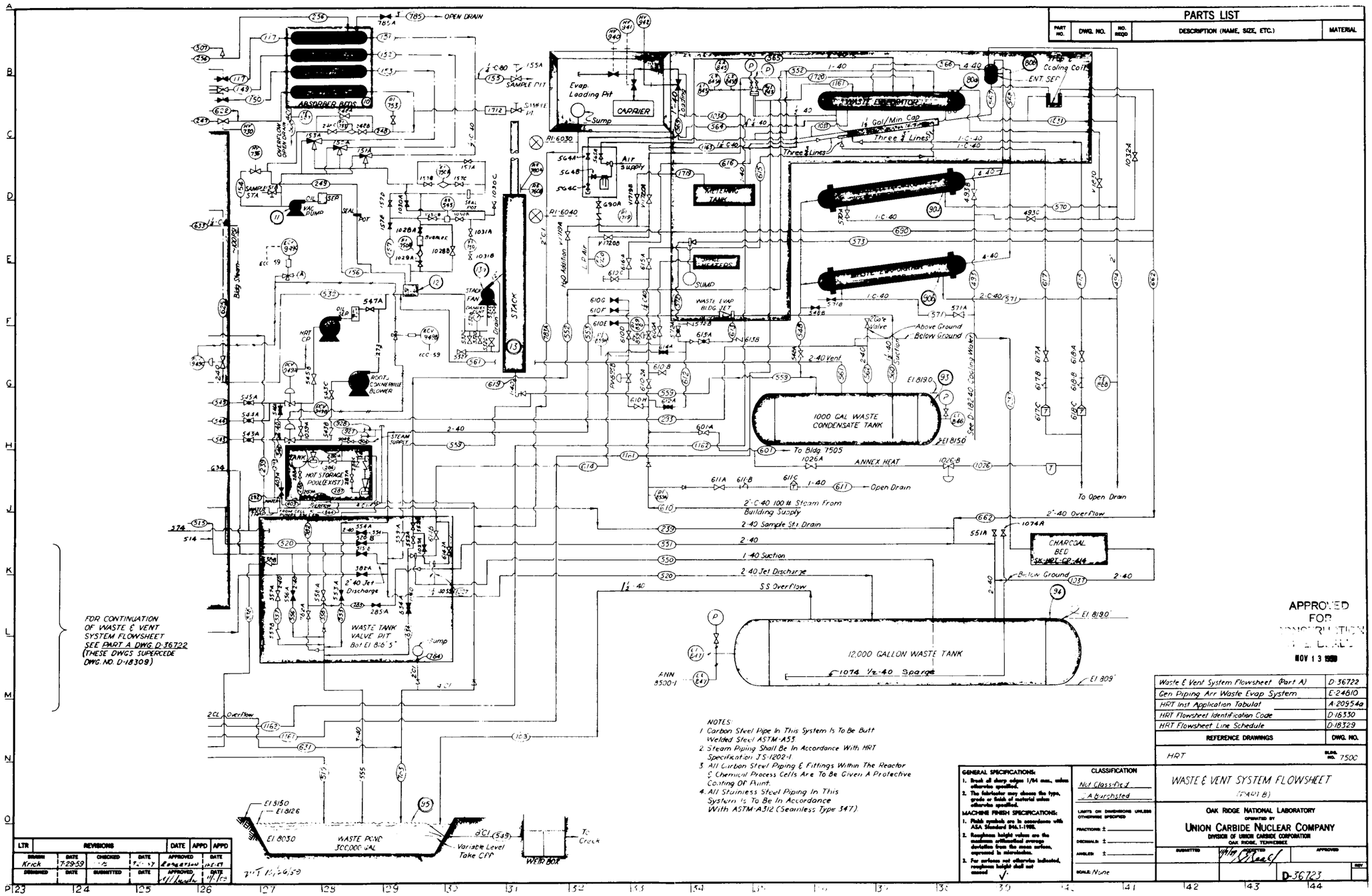

Fig. 2.10. Waste and Vent System (Part B).

from cells B and C, and one 16-in. line (532) from the reactor cell are connected to the suction of the stack fan (item 13a) to provide ventilation during maintenance operations. Valves in the 8- and 16-in. lines are closed during normal operation.

2.8 REFRIGERATION SYSTEM

A refrigeration system,[39] shown in Fig. 2.11, is provided for the following functions: (a) to chill cold traps for removal of D_2O vapor from the reactor off-gas stream, (b) to warm the cold traps (during the thawing portion of the cycle) to recover the trapped D_2O as condensate, and (c) to supply cold refrigerant to a number of pipeline freezer installations. In addition to conserving D_2O, removal of the vapor from the off-gas stream prevents moisture from reducing the effectiveness of the charcoal adsorption units. The pipeline freezers are used to back up valves in certain process lines to ensure positive shutoff of fluid flow by forming ice plugs in the lines. Also, pipeline freezers are used extensively to prevent escape of activity and to prevent entry of shielding water into the reactor system while underwater maintenance operations are being performed.[40-42]

A secondary refrigerant, rather than a single direct expansion system, was selected for chilling the reactor cell equipment for the following reasons:[43]

a. In most cases the shield wall penetrations for the refrigerant lines were at higher elevations than the freeze unit locations in the cell; thus it would be difficult to assure drainage of lubricating oil from the freezers if a primary system with a reciprocating compressor were used. Furthermore, the lubricating oil would be subject to radiation damage inside the cell.

b. A secondary system would permit a wider choise of refrigerants to meet the requirements imposed on the system by the ambient conditions.

c. A thawing arrangement for the cold traps could be conveniently provided by circulating a warm supply of secondary refrigerant.

d. Connections could be easily made to a secondary system to supply temporary refrigeration to freezer units not permanently connected to the circulating system.

The secondary refrigerant,[44] AMSCO 125-82, (a hydrocarbon similar to kerosene) is chilled by a Freon-22 primary refrigeration system and circulated through the cold traps and pipeline freezers. In addition to these systems, a portable refrigerant chilling system is available for temporary use during maintenance operations. In this system, Amsco, chilled to below −60°F by direct contact with dry ice in an insulated tank, is circulated through appropriately placed temporary freezer units by a 40-gpm circulating pump.

In the primary refrigeration system,[39] located outside the reactor containment cell, liquid Freon-22 at about 80°F and 175 psia leaves the receiver (item 111) via line 701, flows through a drier (item 110) and strainer, and then divides into two liquid streams, lines 704 and 706. Each line contains a flow measuring device. About 80% of the flow passes through a subcooler (item 135), where the liquid is cooled to about 20°F by a portion of the bypassed liquid stream expanding through a thermostatic expansion valve (TV-T69). The valve regulates the flow of Freon-22 to maintain about 10°F superheat in the vaporized refrigerant, which is discharged to the compressor interstage manifold via line 758. The remaining portion of the bypassed stream is expanded through a thermostatic expansion valve (TV-T70) in line 708; its function will be described later.

The liquid leaving the subcooler at about 20°F (line 882) flows to the liquid-suction-line heat exchanger (item 136), where it is further cooled to about 0°F. Leaving the heat exchanger, the liquid passes through line 883 to the main evaporator (item 137), where it flashes through a thermostatic expansion valve, TV-T68, and evaporates at about −60°F and 9 psia. Leaving the evaporator at about −50°F, the vapor flows through line 705 to the liquid-suction-line heat exchanger (item 136) where its temperature is raised to about 0°F by heat transferred from the liquid flowing to the evaporator.

Vapor leaving the heat exchanger flows through line 705 to the first-stage manifold of the compressor (item 69). Three cylinders of the reciprocating compressor operate in parallel as a low-pressure stage. A fourth cylinder constitutes the high-pressure stage. Leaving the first stage of compression at about 160°F and 45 psia, the vapor mixes in the interstage manifold with vapor from the subcooler (line 758) and with flashing liquid admitted through thermostatic expansion valve TV-T70 in line 708, mentioned previously. The thermo bulb which controls TV-T70 is located on the interstage manifold, downstream of the liquid injection point. The valve regulates the flow of refrigerant to achieve a mixed final temperature of 50 to 100°F, depending on the system load. The combined streams then enter the second stage of the compressor, where the vapors are compressed to about 175 psia and heated to about 200°F.

Leaving the compressor through line 709, the compressed vapors pass through an oil separator (item 70) before entering a water-cooled condenser (item 75). After condensation, the liquid flows back to the receiver (item 111) to repeat the cycle. Condensing water, about 10 to 20 gpm, is fed to the condenser directly from the potable-water supply system in order to improve the cycle efficiency. Water from the condenser is discharged to the cooling tower basin to serve as makeup for the cooling tower water system.

For 90°F condensing temperature and −50°F evaporator temperature, the primary refrigeration system is rated at 68,000 Btu/hr. With the evaporator at −40°F, it is rated at 86,000 Btu/hr.[39]

The secondary refrigerant, Amsco 125-82, is circulated through a closed, pressurized loop (approximately 5 psig) to satisfy the refrigeration requirements inside the reactor containment cell.[44] Amsco flows from a 100-gal insulated tank (item 71) at about −20°F through line 711 to the suction side of a 45-gpm circulating pump (item 73). Discharging from the pump, the refrigerant flows through line 880 to the shell side of the main evaporator (item 137), where the Amsco is chilled to about −40°F by the primary refrigerant, Freon-22. A side stream may be diverted from the pump discharge, through a silica-gel type drier (item 107), and returned to the storage tank.

Leaving the evaporator via line 712, the flow is divided into line 714, which serves the blanket system requirements, and line 715, which serves the fuel system requirements. The Amsco flows next to the respective valve manifold stations for distribution to five cold traps and thirty-seven permanently connected pipeline freezers.[40–42] The flow returns from the manifold stations to the insulated storage tank via lines 750, 751, and 756. Lines 810, 811, 812, and 813, terminating at the operating floor level, are supply and return lines for chilled Amsco for use in temporarily connected freezer units during maintenance operations.

A warm Amsco circulating system is provided for programmed defrosting of the cold traps. Warm refrigerant flows from a 50-gal storage tank (item 72), equipped with electric immersion heaters, through line 753 to a 7.5-gpm circulating pump. The pump discharge is distributed to the valve manifold stations via line 754, and returns to the storage tank via line 757.

Rupture disks, rated for 150 psig bursting pressure, are provided at all return valves, which, if closed, could trap Amsco in the system. The rupture disks discharge through lines 773 and 775 into a 55-gal catch tank (item 121), vented to atmosphere. The catch tank is equipped with a float-operated switch to sound an alarm if Amsco enters the tank. The two Amsco storage tanks (items 71 and 72) are equipped with spring-loaded relief valves (set at 100 psig) which also discharge into the catch tank.

2.9 STEAM AND CONDENSATE SERVICE SYSTEMS

The process steam system, shown in Fig. 2.12, is supplied with 250-psig saturated steam from the ORNL steam plant. For emergency power process steam can be supplied through line 338 to the turbine generator. Lines 1418-B and 1419-B supply 100- and 250-psig process steam, respectively, to the chemical plant. Line 680, connected to line 338, supplies 250-psig steam to two headers, lines 681 and 473, which deliver steam to the catalyst heaters (for drying the catalyst prior to operation) in the fuel and blanket catalytic recombiners (items 8a and 35a), fuel storage recombiner

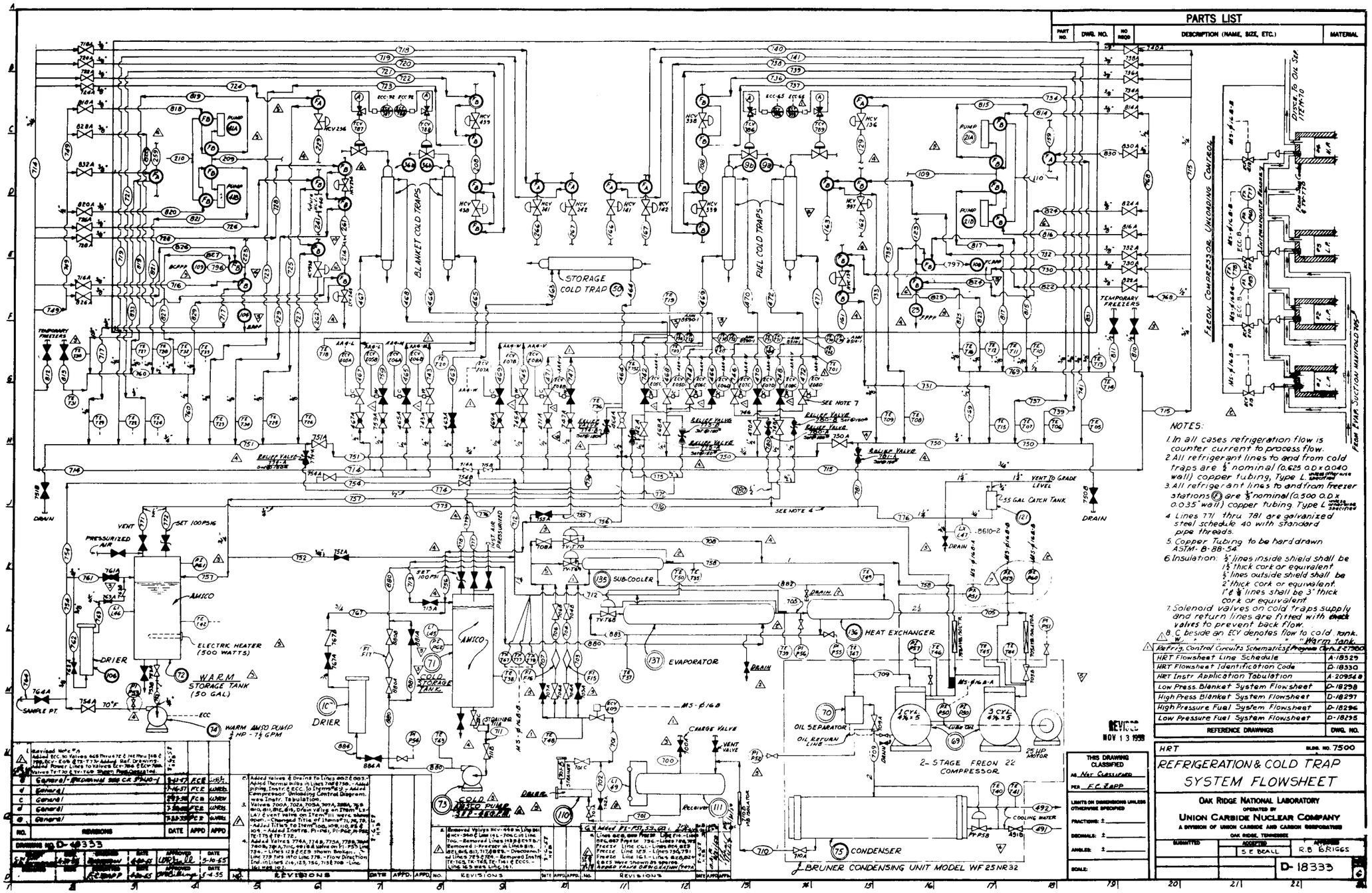

Fig. 2.11. Refrigeration and Cold-Trap System.

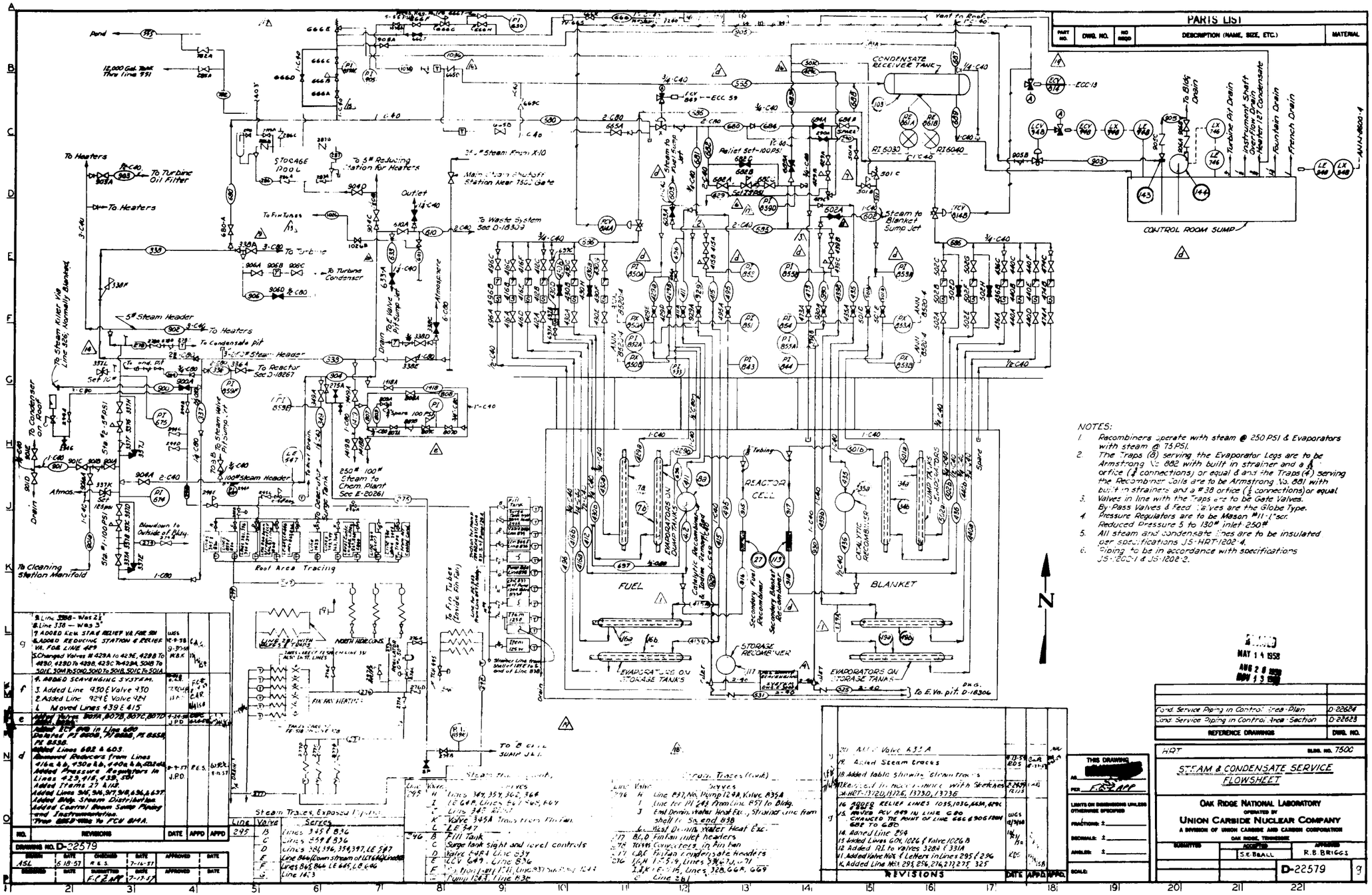

Fig. 2.12. Steam and Condensate System.

(item 117), and the fuel and blanket secondary recombiners (items 27 and 113). Steam for the fuel and blanket storage tank evaporators (items 16a, 16b, 49a, and 49b) is supplied from a 75-psig header, line 685, connected through a pressure reducing station to line 680. Steam (75 psig) for the fuel and blanket dump tank evaporators (items 7a, 7b, 34a, and 34b) is supplied through separate pressure regulating stations, each supplied from line 680.

Line 337, connected to line 338, contains a pressure reducing station, which supplies 100-psig steam through line 904 for the remaining process requirements. Line 901 furnishes 100-psig steam to the condenser (item 133), where it is condensed and becomes the supply for the demineralized-water system. A second pressure reducing station in line 337 further reduces the steam pressure to 5 psig for building-space heating requirements.

Returning condensate lines from each piece of equipment are individually trapped and discharged to a common condensate receiver tank (item 103), which is vented to the roof and which drains to sump at the lower level of the control area. A sump pump (item 144) pumps the condensate to an open drain. Radiation detectors monitor the condensate lines from the fuel and blanket equipment for radioactivity. If activity is detected in any of the lines, a signal is transmitted to close valves FCV-814A and FCV-814B, thus isolating the condensate system. The valved condensate return headers (lines 686) are located close to the reactor shield wall and can be temporarily shielded if condensate activity should penetrate as far as the steam traps.

2.10 LEAK DETECTOR SYSTEM

A flange leak detector system,[45] shown in Fig. 2.13, is provided to indicate and locate leaks in process pipe flanges and to prevent loss of process fluids from the reactor system should a leak develop. The system consists of a number of headers to which individually valved leak detector lines are connected (shown in Fig. 2.14). The numbering system employed on the leak detector lines, Fig. 2.13, refers to the particular set of flanges and the line in which the flanges are located.[4,46] For instance, leak detector A-102, terminated at header No. 6 (Fuel High-Pressure Header), is connected to the set of flanges identified by the letter "A" in line 102. Reference to the fuel high-pressure system flowsheet, Fig. 2.2, shows this set of flanges to be in the line from the heat exchanger to the circulating pump. (In general, letter designations for flanges will start with the letter "A" as the first set in a particular line and progress through the alphabet as one proceeds along the line in the direction of flow.)

The headers are filled with D_2O and pressurized to at least 300 psi above system pressure with a gas mixture consisting of 5% hydrogen and 95% helium. The leak detector header and lines are completely filled with D_2O. A pressurizer, equipped with a level sight glass, is connected to the various headers. During normal operation the individual lines are all interconnected through the pressurizer. A leak is simultaneously indicated by a loss in level in the sight glass, a loss of overpressure, and flow indication on a flowmeter. The leak is first isolated to a particular header by alternately closing the header fill valves until flow stops. After isolating the header, the leak may be located by a similar procedure on the individual leak detector valves. In this manner a leak may be located and the leak rate established by observing the volume change over a period of time.

A special leak detector system monitors about 16 reactor steam system flanges inside the reactor cell. It operates similarly to the above described procedure, except that a pressure rise is used as an indication of a flange leak.

Another special system is provided for the flanged heads of the heat exchangers, the flanged body of the circulating pumps, and the core inlet and outlet flanges.[47,48] All these locations have return lines to the control area for possible purging and sampling. The return lines are normally valved off and the system operates in the manner described above.

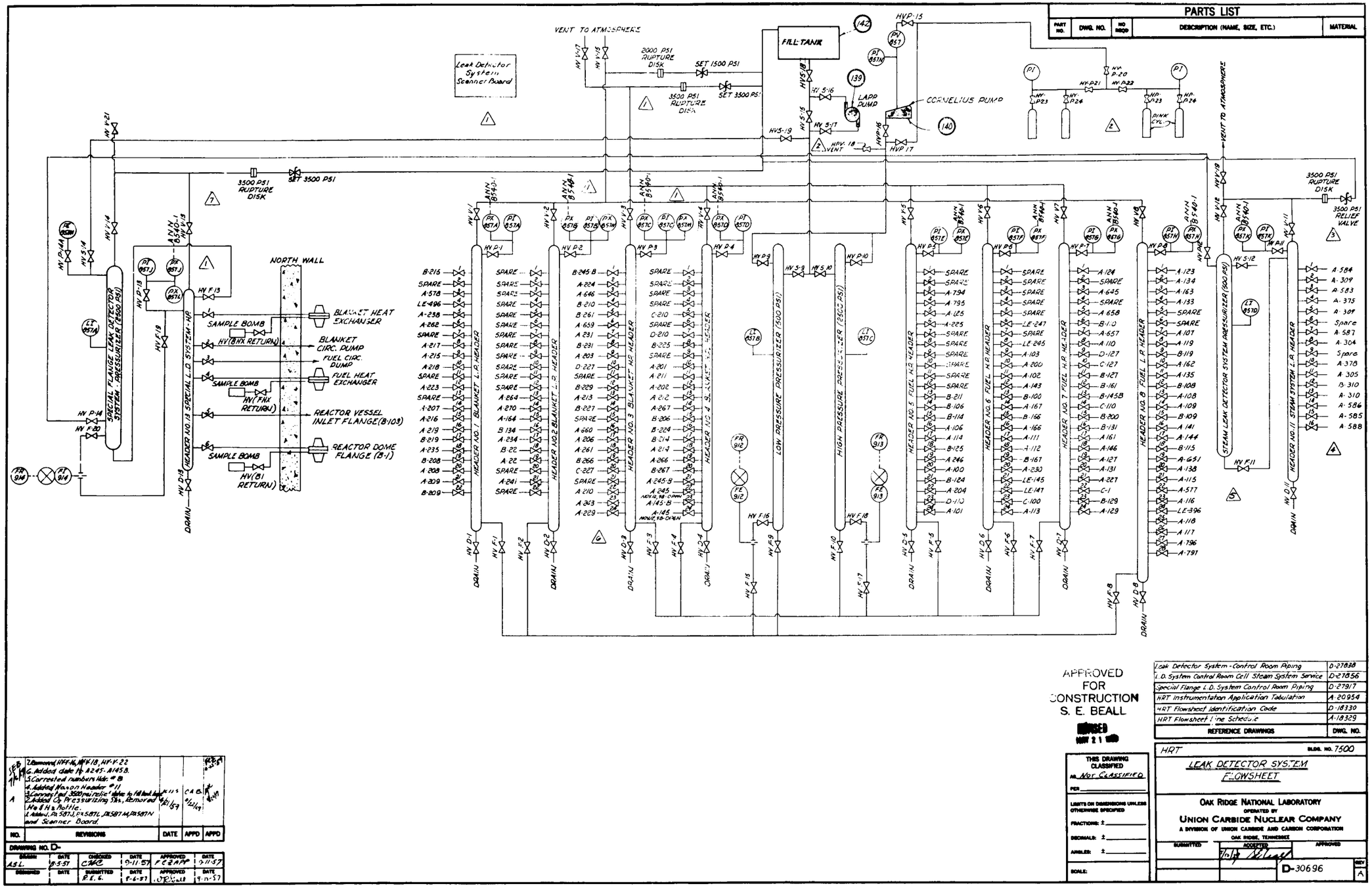

Fig. 2.13. Leak-Detector System.

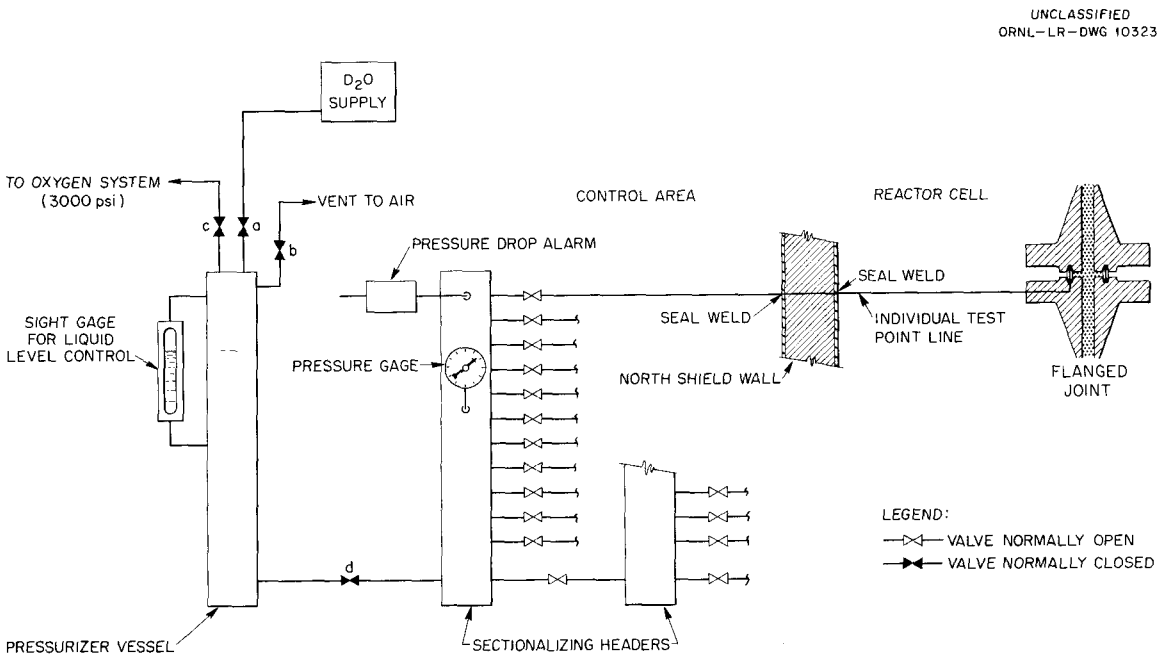

Fig. 2.14. Schematic Diagram of Leak-Detector System.

REFERENCES

1. R. C. Robertson and J. E. Jones, *HRT Process Flowsheets – Revised Edition,* ORNL CF-55-5-156 revision 5 (Dec. 15, 1959).
2. F. C. Zapp, *HRT Process Flowsheets*, ORNL CF-55-5-156 (May 26, 1955); ORNL CF-55-5-156 revision 1 (Aug. 25, 1955); ORNL CF-55-5-156 revision 2 (Mar. 6, 1956); ORNL CF-55-5-156 revision 3 (Jan. 30, 1957); ORNL CF-55-5-156 revision 4 (Feb. 25, 1959).
3. F. C. Zapp, *HRT Flowsheet Changes,* ORNL CF-55-6-42 (June 7, 1955); *HRT Flowsheet Changes* (No. 3 in series), ORNL CF-55-8-134 (Aug. 25, 1955); *HRT Flowsheet Changes* (No. 4 in series), ORNL CF-56-3-68 (Mar. 7, 1956);
   C. W. Collins and F. C. Zapp, *HRT Flowsheet Changes* (No. 5 in series) (Oct. 8, 1957).
4. W. L. Wright, *HRT Line Schedule – Issue No. 5*, ORNL CF-55-8-133 revision 5 (Dec. 9, 1957).
5. W. R. Gall, *Nuclear Data for HRE*, ORNL CF-54-1-11 (Jan. 7, 1954).
6. R. B. Briggs *et al., HRP Quart. Progr. Rept. Jan. 31, 1954,* ORNL-1678, p 22.
7. F. C. Zapp and R. E. Aven, *HRT Design Data,* ORNL CF-54-2-158 (Feb. 22, 1954).
8. F. C. Zapp and R. E. Aven, *HRT Design Data, Issue No. 2*, ORNL CF-54-8-53 (Aug. 10, 1954).
9. F. C. Zapp and R. E. Aven, *HRT Design Data, Issue No. 3*, ORNL CF-54-8-53 revision 3 (Apr. 19, 1956).
10. P. N. Haubenreich, *Rates on Xenon Poison Level and Excess Oxygen Concentration in the HRT*, ORNL CF-57-5-100 (May 31, 1957).

11. S. Visner, *Oxygenation of HRT Solution,* ORNL CF-54-7-34 (July 14, 1954).

12. P. M. Wood, *Possibility of Peroxide Precipitation in the HRT Dump and Sampler Lines,* ORNL CF-54-11-172 (Nov. 29, 1954).

13. R. Van Winkle, *Specifications for the Fuel Oxygenation Systems,* ORNL CF-55-7-13 (July 1, 1955).

14. E. H. Gift. *Possibility of Oxygen Depletion in Stagnant Uranyl Sulfate Lines,* ORNL CF-57-4-128 (Apr. 29, 1957).

15. P. N. Haubenreich, *Possibility of Peroxide Precipitation when the Reactor Cell is Flooded,* ORNL CF-57-11-83 (Nov. 15, 1957).

16. F. C. Zapp, *HRT Oxygen Addition System,* ORNL CF-56-3-42 and Addenda (Mar. 2, 1956 and Mar. 21, 1956).

17. A. M. Billings, *HRT Oxygen Metering Stations,* ORNL CF-56-7-72 (July 19, 1956).

18. J. W. Hill, Jr., *Removal of the HRT Fuel Solution from the HRT Blanket System,* ORNL CF-54-8-134 (Aug. 17, 1954).

19. F. C. Zapp, *HRT Cooling Water Requirements,* ORNL CF-54-5-224 (May 27, 1954).

20. O. Zmeskal, *Report on Stress-Corrosion Cracking of Stainless Steels (An Analysis of Possible Chances of its Occurrence in HRT),* ORNL CF-55-8-112 (Aug. 15, 1955).

21. H. A. McLain, R. E. Aven, and R. C. Robertson, *HRT Cooling Water System Modifications,* ORNL CF-56-8-152 (Aug. 23, 1956).

22. P. H. Harley, *Feed Pump and Purge Water Flow Measurements,* ORNL CF-56-5-169 (May 24, 1956).

23. W. R. Gall, *Specifications for HRT Reactor and Service Systems,* ORNL CF-55-8-111 (issue No. 2) (June 7, 1956).

24. R. B. Briggs and F. C. Zapp, *HRT Design Request No. 3 – Steam Power System,* ORNL CF-54-4-93 (Apr. 15, 1954).

25. R. C. Robertson, *Steam System for HRT, A Study,* ORNL CF-54-4-194 (Apr. 28, 1954).

26. F. C. Zapp, *HRT Power System Flow Diagram – D-KP-L7602A-P, Maximum Load HRT Steam System Heat Balance – C-KP-L7602B1-P, Minimum Load HRT Steam System Heat Balance – C-KP-L7602B2-P,* ORNL CF-54-5-49 (May 11, 1954).

27. J. T. Selldorff, *Design Report – HRT Steam System,* KD-1327 (Mar. 7, 1955).

28. F. C. Zapp, *HRT Steam System Instrumentation,* ORNL CF-54-4-213 (Apr. 30, 1954).

29. F. C. Zapp, *HRT Steam System Instrumentation,* ORNL CF-54-5-198 (May 24, 1954).

30. H. D. Wills, *HRT Steam System Feedwater Pressure Control,* ORNL CF-58-4-8 (Apr. 15, 1958).

31. S. J. Ball, *Frequency Response Analysis of the HRT Feedwater Control System,* ORNL CF-58-4-10 (Apr. 4, 1958).

32. R. L. Moore, *Review of HRT Feedwater System,* ORNL CF-58-4-63 (Apr. 9, 1958).

33. E. H. Gift, *Determination of Maximum Permissible Leakage from the HRT Process Steam System,* ORNL CF-59-1-143 (Jan. 30, 1959).

34. H. A. McLain, *Treatment of the HRT Steam System Water,* ORNL CF-56-11-132 (Nov. 29, 1956).

35. H. A. McLain, *Chemical Cleaning and Storage of the HRT Steam and Closed Cooling Water Systems,* ORNL CF-57-6-36 (June 5, 1957).

36. R. C. Robertson, *Gravity Return of Condensate from HRT Steam Drum to Main Heat Exchanger,* ORNL CF-54-8-26 (Aug. 2, 1954).

37. J. W. Hill, Jr., *Requirements for HRT Auxiliary Steam Generator,* ORNL CF-54-5-30 (May 6, 1954).

38. J. E. Kuster, *Waste and Disposal Systems,* ORNL CF-56-10-15 (Oct. 1, 1956).

39. R. C. Robertson and H. A. McLain, *Modified HRT Refrigeration System,* ORNL CF-57-8-67 (Aug. 6, 1957).

40. R. C. Robertson, *Permanent Freeze Jackets for HRT Process Lines 1/2 in. and Smaller,* ORNL CF-56-2-137 (Feb. 23, 1956).

41. R. C. Robertson, *HRT Permanent Freeze Jacket Locations – Revised May 29, 1956,* ORNL CF-56-5-183 (May 29, 1956).

42. R. C. Robertson, *Permanently Installed HRT Freeze Jackets,* ORNL CF-57-1-93 (Jan. 16, 1957).

43. R. C. Robertson, *Cold Traps, Freeze Jackets, and Refrigeration System Used in the HRE-2,* Nuclear Engineering and Science Conference, Apr. 6–9, 1959, Cleveland, Ohio, Preprint V-30.

44. R. C. Robertson and H. A. McLain, *Secondary Refrigerant for HRT Refrigeration System,* ORNL CF-57-1-88 (Jan. 24, 1957).

45. J. E. Kuster, *HRT Leak Detector System,* ORNL CF-56-4-105 (Apr. 20, 1956).

46. C. A. Burchsted and W. Terry, *List of Stainless Steel, Ring Joint Flanges in the HRT,* ORNL CF-58-9-61 (Sept. 24, 1958).

47. E. A. Mason and H. A. McLain, *Circulating Leak Detector System for HRT Flanges,* ORNL CF-57-4-38 (Apr. 9, 1957).

48. E. A. Mason, *Final Process Design for Leak Detector System for Special Flanges,* ORNL CF-57-5-96 (May 29, 1957).

3. Component Design

3.1 INTRODUCTION

The design of the major items of equipment is described in this chapter. (A complete tabulation of components by item numbers is given in Appendix A. The tabulation also includes the system in which the component is used.) Pertinent design criteria, results of calculations, and specifications are given. Reference is made to detailed calculations and discussions for additional information. Although, in general, the HRP Quarterly Progress Reports are not specifically referenced, the status of design, development, construction, supporting research, etc., was routinely reported. (See ref 9, chap. 1.)

Detailed drawings are not included in this report; instead, schematic and illustrative drawings are used where available. For those interested, tabulated drawing lists have been compiled.[1]

Although most of the components underwent performance testing either before or after installation in the reactor system, only those test results requiring design changes are reported herein. These results were usually obtained in a test facility referred to as the HRT mockup.[2-4] The results of preoperational testing and operational performance are reported elsewhere. (See refs 11 and 13, chap. 1.)

3.2 CORE TANK

3.2.1 Introduction

In a two-region aqueous homogeneous reactor, a thin inner vessel, or core tank, contains the fuel solution and thus separates it from the surrounding blanket material. A sectional view of the HRE-2 reactor vessel assembly without blast shield is shown in Fig. 3.1. The core tank is essentially a spherical vessel sized to sustain a nuclear chain reaction at temperatures up to 300°C with a uranium concentration of less than 10 g of U per kg of D_2O and with a D_2O reflector.[5]

The Newport News Shipbuilding and Dry Dock Company was selected to produce the core tank, pressure vessel, and blast shield, based on ORNL Specifications[6] HRT-1001, HRT-1032, and HRT-1098; to carry out the necessary development of Zircaloy-2 fabrication techniques; and to fabricate the core tank, pressure vessel and blast shield assembly. The design, development, and fabrication can be followed in detail in the periodic progress reports.[7] A detailed fabrication history[8] of the core tank and of the pressure vessel and blast shield[9] were submitted by the Newport News Shipbuilding and Dry Dock Company; the core tank fabrication history was later distributed as an ORNL memorandum.[10] A summary of the development and fabrication of the core tank has been presented.[11]

3.2.2 Core Tank Description

The core tank is a 32-in.-ID spherical vessel with an inlet section consisting of two conical diffusers. Perforated plates, ⅛-in. thick and having 55 to 60% free area, are fitted inside the

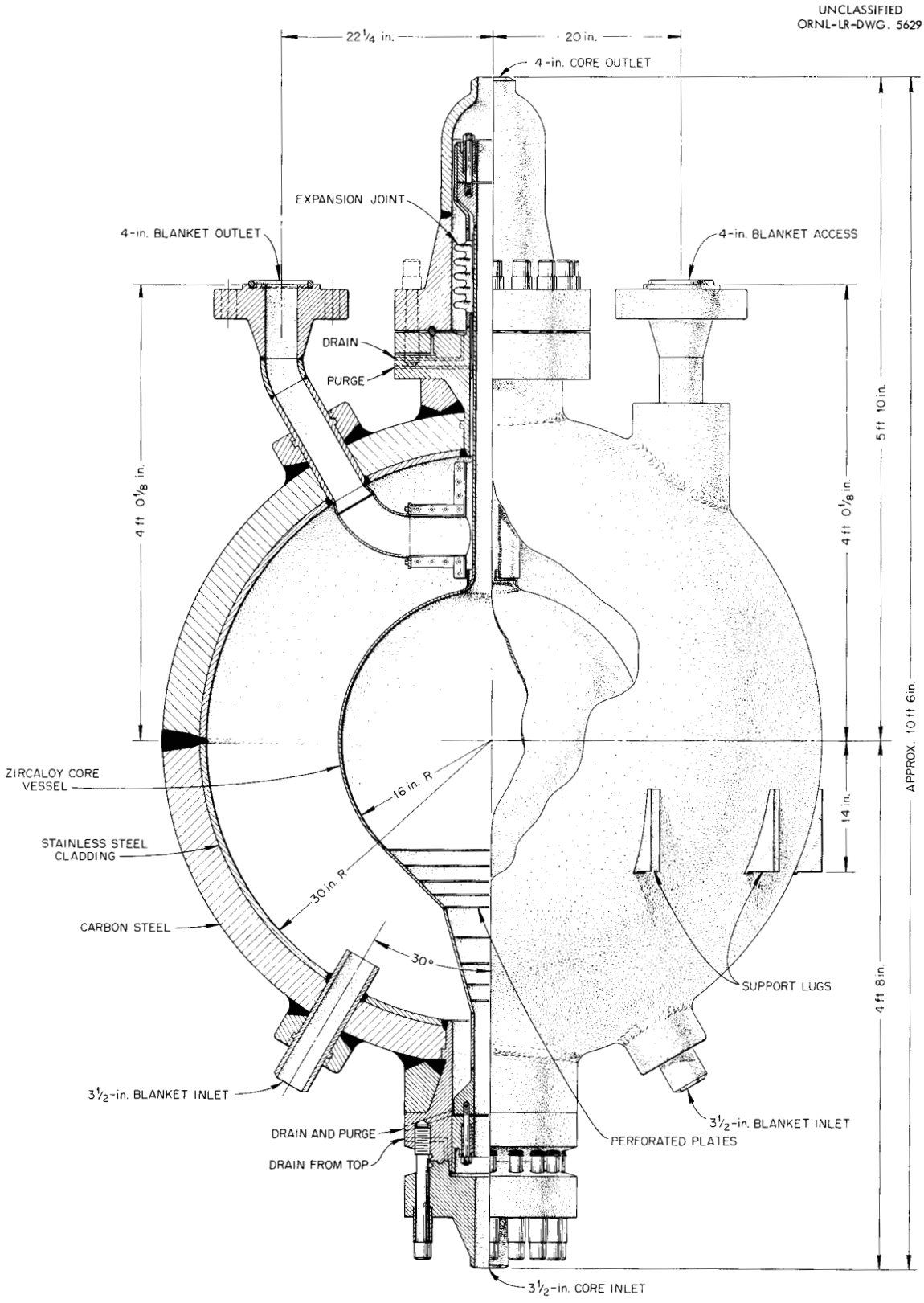

Fig. 3.1. Pressure-Vessel Assembly Without Blast Shield.

conical sections to produce a uniform expansion of the inlet stream. Zircaloy-2 plates, $\frac{5}{16}$-in. thick, were hot-pressed into spherical sectors and welded together to form the spherical portion of the core tank. Similarly, $\frac{3}{8}$-in.-thick plates were hot-pressed to form half cones, which were welded together to form the conical portions of the vessel. The inlet and outlet pipes and the end flanges were machined from solid Zircaloy-2 forgings. Figure 3.2 shows the relative position and orientation of the weld joints in the core tank assembly.

The selection of a sphere for the core tank was based on nuclear and mechanical design considerations. From a nuclear standpoint, a sphere exhibits the smallest critical volume for a given fuel concentration and, consequently, the highest average power density for a specified total power. From a mechanical standpoint, a sphere is much stronger (about a factor of two for internal pressure) than a cylinder of equal diameter and thickness and exhibits a greater degree of stability under external pressure differentials. Therefore these factors, of interest in the design of large breeder reactors, supported the selection of a sphere for the core tank.

Selection of 32 in. as the diameter of the core tank was based on nuclear considerations and materials characteristics.[12] It was estimated that a core tank of this diameter would be critical with a fuel concentration of 10 g of U^{235} per kg of D_2O when surrounded by a 14-in.-thick D_2O reflector. A smaller core diameter would require a fuel concentration in excess of 20 g of U^{235} per kg of D_2O if the core were surrounded by a strongly absorbing medium, for example, a thorium oxide slurry. Fuel concentrations greater than 20 g of U per kg of D_2O would be undesirable for reasons related to corrosion of stainless steel piping and equipment. Core tanks that are larger in diameter would reduce the specific power to undesirable values if the total power were held constant at 5 Mw.

The thickness of the core tank was specified as $\frac{1}{4}$ in. minimum to provide adequate stability against collapse under external pressure differentials. Greater thicknesses would decrease the structural similarity to the relatively thin core tanks required for good neutron economy in large breeder reactors.[13] In developing fabrication techniques for the core tank, it was decided that the core tank thickness should be increased to $\frac{5}{16}$ in. to allow for possible thinning of the plates being hot-pressed into spherical sectors. Actually, very little thinning of the material took place.[10]

3.2.3 Core Tank Material

Ideally, the core tank material should not absorb neutrons, should resist corrosion by fluids with which it is in contact, should have good structural strength at temperatures up to 300°C, should lend itself to common fabrication techniques, should not suffer radiation damage, and, among other things, should conduct heat well. The material nearest to the ideal is zirconium or one of its alloys.

Zircaloy-2, an alloy of zirconium containing about 1.5% tin as the major alloying agent, was selected for the core tank material, although a fabrication technology (except that for pin- and plate-type fuel element cladding) was nonexistent at the time. The choice of Zircaloy-2 for the HRE-2 core tank was based primarily on the need to develop fabrication techniques and determine the suitability of Zircaloy-2 for core tanks for large breeder reactors and secondarily on the special nuclear properties exhibited by zirconium.

In out-of-pile service, zirconium and Zircaloy-2 are almost completely resistant to corrosion by uranyl sulfate solutions. No localized corrosion, crevice corrosion, galvanic action from couplings with other metal, or stress corrosion cracking in the presence of chloride have been observed with Zircaloy-2 or pure zirconium specimens. The presence of fluoride impurities, however, leads to pitting and to very bad crevice corrosion.[14] An appreciable increase in the overall corrosion rate and some localized attack of Zircaloy-2 have been observed in the presence of as little as 43 ppm of fluoride ion contaminant.[15]

A more complex, less desirable situation exists in the in-pile corrosion behavior of Zircaloy-2. Specimens exposed to fissioning uranyl sulfate solution experience substantial attack. Under

PARTS LIST				
PART NO.	DWG. NO.	NO. REQD	DESCRIPTION (NAME, SIZE, ETC.)	MATERIAL

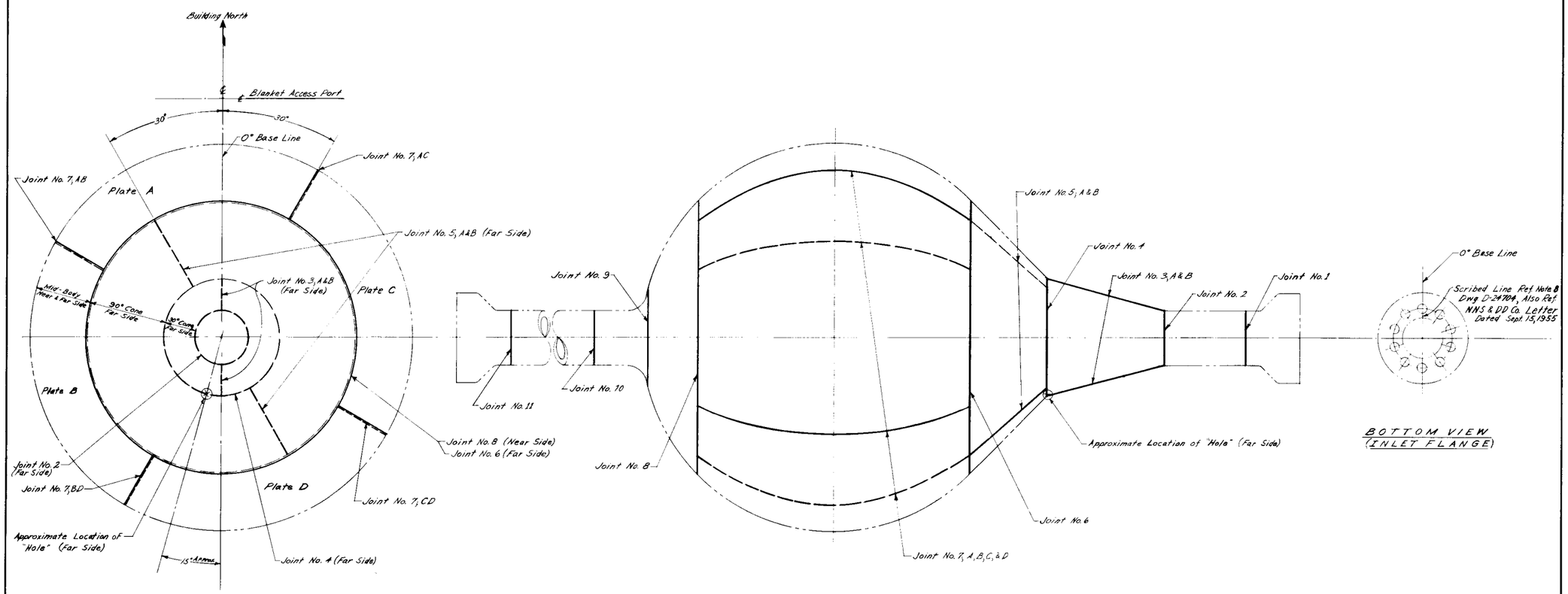

PLAN
Showing Weld Joint Orientation
Ref NNS & DD Co. Sketch Dated 5/15/57

ELEVATION

NOTES
1. Bold Lines are Near Side Welds.
2. Dashed Lines are Far Side Welds.
3. Weld Joint Numbers do not indicate Weld Sequence.
4. Weld Joint Orientation in spherical portion of vessel deduced from a study of weld radiographs by NNS & DD Co.

REFERENCE DRAWINGS	DWG. NO.
NNS & DD Co. Letter to UCNC, dated 9/15/55	
NNS & DD Co. Sketch of Weld Orientation, dated 5/15/57	
HRT Inlet Flange Assembly	D-24704

HRT — BLDG. NO. 7500

GENERAL SPECIFICATIONS:
1. Break all sharp edges 1/64 max., unless otherwise specified.
2. The fabricator may choose the type, grade or finish of material unless otherwise specified.

MACHINE FINISH SPECIFICATIONS:
1. Finish symbols are in accordance with ASA Standard B46.1-1955.
2. Roughness height values are the maximum arithmetical average deviation from the mean surface, expressed in microinches.
3. For surfaces not otherwise indicated, roughness height shall not exceed √.

CLASSIFICATION: Not Classified — R.H.C.

LIMITS ON DIMENSIONS UNLESS OTHERWISE SPECIFIED
FRACTIONS: ±
DECIMALS: ±
ANGLES: ±
SCALE: NONE

WELD LOCATIONS ON HRT CORE TANK

OAK RIDGE NATIONAL LABORATORY
OPERATED BY
UNION CARBIDE NUCLEAR COMPANY
A DIVISION OF UNION CARBIDE CORPORATION
OAK RIDGE, TENNESSEE

SUBMITTED	ACCEPTED	APPROVED

TD-D-3590 — REV

LTR	REVISIONS	DATE	APPD	APPD

DRAWN	DATE	CHECKED	DATE	APPROVED	DATE
JPD	10-8-58	R.H.	10-8-58	F.L.B. APPR	10-8-58
DESIGNED	DATE	SUBMITTED	DATE	APPROVED	DATE
				H. Lundin	10/8/58

Fig. 3.2. Weld Locations on HRT Core Tank.

these conditions the corrosion rate has been affected by several variables, of which the more important are power density, temperature, acidity, velocity, solution concentration, and surface condition.[16] At the time the core vessel was being designed and fabricated, very little was known about the effect of the various factors on the corrosion. (A recent review of in-pile Zircaloy-2 corrosion data and a model for describing the effect of irradiation have been issued.[17]) In the absence of data on in-pile corrosion rates and the factors influencing the rate of attack, a corrosion allowance was not specified for the core tank. Since the plate thickness was increased from $\frac{1}{4}$ in. to $\frac{5}{16}$ in. to compensate for thinning during fabrication, thickness in excess of the $\frac{1}{4}$-in. minimum was available as corrosion allowance.

As data became available, corrosion rates were estimated for the core tank, assuming the core tank would have machined surfaces;[18] the results are given in Table 3.1 for a typical fuel solution. In general, the bases for the rate estimates are as reported.[16] The estimates include only the effect of that amount of uranium expected to be sorbed on the corrosion film and scale, not the effect of large deposits of uranium. The core-wall power density reported in the table is about that expected during 5-Mw operation. The sandblasted surfaces of the core tank would be expected to corrode at somewhat higher rates; however, no method for estimating the difference between the two surface preparations existed at the time the estimates were made.

Table 3.1. Estimated Corrosion Rates for HRE-2 Core Tank

Fuel solution (at 280°C): UO_2SO_4, 0.036 *m*; H_2SO_4, 0.020 *m*

Core-wall power density: 15 w/ml

Temperature (°C)	Corrosion Rate (mil/yr)
250	10
260	13
280	21
300	28
320	34

3.2.4 Core Hydrodynamics

Prior to and during the design and construction stages of HRE-2, most concepts of aqueous homogeneous breeder reactors were based on the use of spherical core tanks. Consequently, flow tests were conducted on a variety of spherical vessels which would satisfy the following criteria:

1. Heat removal from all points should be rapid and orderly to prevent the generation of hot spots.
2. Radiolytic gases, formed from the decomposition of water, should be removed rapidly from the core.
3. The pressure drop across the core should be low.

Rotational flow, in which fuel solution is introduced tangentially into the sphere and withdrawn at the center of a vortex at the top pole, was used in the HRE-1. As the core diameter increases in rotational-flow systems, the pressure drop increases rapidly for a given inlet velocity; and the core becomes less effective as a gas separator. Calculations for an intermediate-scale reactor showed that this flow concept would not be desirable for large reactors because of the excessive pressure drop across the core.[19]

Straight-through flow was selected for HRE-2 because it was considered to be promising for large reactors and because the design appeared to be satisfactory in tests of 32-in.-diam, 400-gpm models[20,21] and 48-in.-diam, 5000-gpm models.[22] In this flow concept, the fluid is introduced at the bottom of the core through a conical diffuser section containing perforated plates or screens and proceeds through the core in slug flow. The number of perforated plates needed is determined by the ratio of sphere diameter to inlet pipe diameter. In general, this ratio decreases with increasing reactor size, resulting in fewer plates and better performance. By proper design of the diffuser section, the velocity distribution can be made to conform to the neutron flux distribution of the core. As a result, the isotherms of the core are horizontal; and the temperature of the fluid increases uniformly as it passes through the core. Gas bubbles rise upward with a greater velocity than the liquid and are removed through an external pipeline gas separator.

The first design for the diffuser was a 90°-included-angle conical section with six diffuser screens.[20] Flow tests of this arrangement showed that it would not be possible to achieve a stable flow pattern with a single conical diffuser.[23] Consequently, the diffuser section was modified to include a 30°-included-angle cone followed by a 90°-included-angle cone with nine screens to prevent flow separation within the diffuser. Flow tests of this concept indicated that it would be satisfactory for use in HRE-2.[21] A vaned elbow upstream of the inlet section showed some improvement in the diffuser performance; however, it was not used because of the difficulty anticipated in fabricating an elbow in the $3\frac{1}{2}$-in. pipe size.[23]

Because of the difficulty in obtaining suitable Zircaloy-2 wire for weaving diffuser screens and the difficulty anticipated in attaching screens to the diffuser cones, flow tests were performed on perforated plates.[24] The results indicated that the flow characteristics of perforated plates and screens are much the same. Consequently, perforated plates were specified for the diffuser section in the HRE-2 core.[25] The dimensions of the diffuser plates are given in Table 3.2; the vertical spacings of the plates and the final version of the core tank design are shown in Fig. 3.3.

Table 3.2. Diffuser Plate Dimensions

Plate No.	Plate Diameter (in.)	Thickness (in.)	Hole Diameter[a] (in.)	Solidity (%)
1	$4\frac{19}{64}$	0.125	$\frac{13}{32}$	40.4
2	$5\frac{19}{64}$	0.125	$\frac{13}{32}$	40.4
3	$6\frac{33}{64}$	0.125	$\frac{13}{32}$	40.4
4	$8\frac{1}{32}$	0.125	$\frac{13}{32}$	40.4
5	$9\frac{7}{8}$	0.125	$\frac{13}{32}$	40.4
6	$12\frac{9}{64}$	0.125	$\frac{13}{32}$	40.4
7	$14\frac{15}{16}$	0.125	$\frac{13}{32}$	40.4
8	$18\frac{25}{64}$	0.125	$\frac{25}{64}$	44.6
9	$21\frac{15}{16}$	0.125	$\frac{25}{64}$	44.6

[a]Spaced on $\frac{1}{2}$ in. triangular pitch.

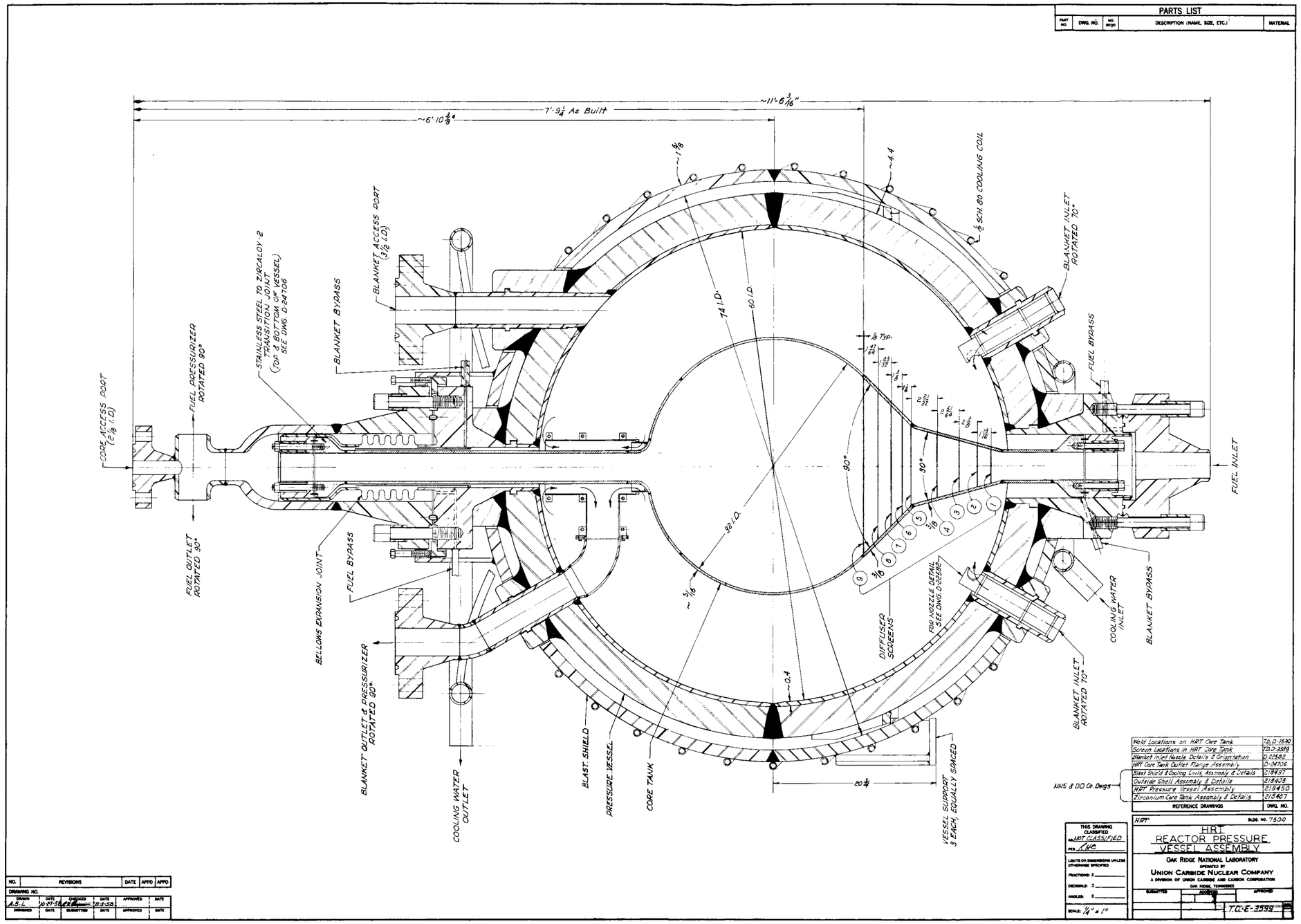

Fig. 3.3. HRT Reactor Pressure Vessel Assembly.

The pressure drop across the core was estimated from flow studies[21] to be 1.42 inlet-velocity heads (approximately 3.2 psi) at a flow rate of 400 gpm. Average fluid residence times of 4.7 and 5.1 sec were obtained from the flow studies for the lower and upper hemispheres respectively. Gas-holdup tests indicated that residence time would be independent of the amount of gas present. It was anticipated that the core tank would be cooled by natural convection and localized boiling.

Concurrent with the development of core tank fabrication techniques, a third flow pattern was conceived and tested.[26–28] In this concept, the inlet and outlet pipes are concentric at either pole of the sphere. The inlet jet induces vigorous turbulence so that the core fluid is well mixed. Except for the cold inlet jet, the bulk of the fluid is at outlet temperature. The mixed-flow concept simplified the vessel design and fabrication, but it did not seem to offer any distinct hydrodynamic advantages over the straight-through concept. A decision was made to retain the straight-through concept, since considerable delay would result from redesigning the reactor and reorienting the development of core tank fabrication methods.

3.2.5 Core Wall Temperature

As a result of an inverse solubility-temperature relationship, uranium and fission products in a fuel solution tend to be deposited on surfaces which are at a higher temperature than the solution. Such a situation exists in the core of a reactor, where the core wall is heated by nuclear radiation. In order to evaluate the importance of this phenomenon in HRE-2, calculations were made to estimate the operating temperature of the core wall.[29] The results are also important in estimating the expected corrosion rates.

Excluding volume heat sources in the fuel and deposition of heat generating material on the core wall surfaces, the gamma heat generation rate was estimated to be 1.8 w/cm^3 and was uniformly distributed across the core wall at 5-Mw operation with a D_2O reflector.[29] The contribution of beta particles to core wall heating was estimated to be equivalent to a surface heat rate of 0.05 w/cm^2.[30] (Using a more rigorous calculational procedure,[31] the core wall heating was later estimated to be 2.6 to 3.0 w/cm^3.) These heat generation rates, which are directly proportional to power level, would be twice as great at 10-Mw operation.

For 5-Mw operation with a D_2O reflector, the fuel solution inlet and outlet design temperatures are 493°F (256°C) and 572°F (300°C) respectively. Corresponding D_2O temperatures are 532°F (278°C) and 540°F (282°C).[32] Since the fuel and D_2O enter at the bottom and flow upward, the reflector fluid is hotter than the core fluid in the lower regions. Near the equator the fluids are at almost the same temperature; in the upper part of the core tank, the fuel solution is hotter than the reflector fluid. Because of these changing conditions, the temperature of the core wall and its distribution change with position. Excluding volume heat sources, calculations for 5-Mw operation indicated the core wall to be about 10°F above the fluid temperature at the equator.[29] The calculations also indicated the wall to be about 5°F cooler than the fuel at the midpoint between the equator and the core outlet and about 18°F hotter than the fuel at the intersection of the sphere and the diffuser.

In subsequent investigations[33,34] of the core wall heat transfer, the effects of forced and free convection and a volume heat source in the fuel solution were included. These calculations also neglected the effect of uranium deposition; however, the possibility of local core wall hot spots in the lower hemisphere was noted.

The results of these investigations were reported in terms of inside surface temperature as a function of heat removal rate at the outside surface. On the basis of a simplified analysis,[34] the inside surface temperature in the upper hemisphere was reported to range 10 to 15°C above the solution temperature at 5 Mev.

3.2.6 Allowable Core Tank Pressure Differential

Two fundamentally important criteria for establishing the thickness of the core tank of a two-region breeder reactor are neutron economy and mechanical strength. Neutron economy was not a primary consideration in determining the thickness of the HRE-2 core tank. Instead, stability under external pressure differentials and structural similarity to the relatively thin core tank required in large breeder reactors were the determining factors in establishing the ¼-in. minimum thickness for the HRE-2 core vessel. In general, reducing the wall thickness, thus increasing neutron economy, reduces the design safety factor and requires a very accurate analysis of mechanical strength.

The possibility that radiation damage to the core vessel material would render it susceptible to failure at points of high localized discontinuity stresses required that a thorough analysis be made of the bending stresses near the intersections of the various geometrical shapes. The thickness of the transition piece between the sphere and the cylindrical core outlet was increased about 50% to afford reinforcement of the opening; a radius was used at the junction to reduce the discontinuity stresses.

The thickness of the conical diffuser section was made such that the collapsing pressure of the composite core vessel would not be less than that of a completely spherical vessel. Because of the unusual shape of the vessel, it was impossible to accurately calculate the minimum thickness required for the conical sections. Using the procedures of the ASME code for vessels subjected to external pressure and assuming that the portion of the composite vessel near the sphere-cone intersection could be approximated by a cylinder of a diameter equal to that at the intersection, the required thickness of the cone was estimated to be about 50% greater than the ¼-in. spherical wall thickness.

To verify the design experimentally, pressure tests of stability characteristics were performed on full-scale aluminum models of the core vessel.[35] The maximum pressure stresses, including bending stresses at the discontinuities, were estimated to be about 30% greater than the membrane stresses for a complete sphere. Collapsing tests indicated that the thickness of the conical sections, as calculated, would be adequate, since the composite aluminum test vessel buckled in the spherical portion.[36] Table 3.3 is a comparison of the test vessel and the core vessel,[37] based on the test data and Zircaloy-2 properties.[38]

The effect of thermal stresses resulting from internal heat generation within the core wall was investigated. Using the temperature gradients reported,[29] the thermal stresses were estimated to be about 200 to 300 psi.[39] (A later analysis of the combined stresses in the vicinity of the intersection of the two cones indicated the thermal stress was negligible compared with the other stresses at the point.[40])

Assuming a conservative Zircaloy-2 corrosion rate of 30 mils/yr and using the results from the aluminum model tests, recommended allowable working pressures for the core tank were established[37] as a function of operating time. Table 3.4 presents the recommended working pressures.

Table 3.3. Comparison of Core Vessel with Test Vessel

	Test Vessel	Core Vessel
Maximum stress per unit pressure, dimensionless	40	32[a]
Collapse pressure, psi	435	440[a]
Location of failure	sphere	sphere[b]
Temperature, °F	70	600
Yield strength (0.2%), psi	15,000	14,000[c]
Modulus of elasticity (compression), 10^6 psi	11.1	7.2[c]
Sphere ID, in.	32	32
Sphere thickness, in.	1/4	5/16
Thickness of cones, in.	3/8	3/8
Thickness of cylinders, in.	3/8	3/8
Thickness of transition pieces, in.	3/8	3/8
Radius of transition pieces, in.	1.5	1.5
Maximum out-of-roundness, %	1.4	1.3

[a]Before corrosion.
[b]Expected location of failure.
[c]Properties from ref 38.

Table 3.4. Recommended Working Pressures for HRE-2 Core Tank

Time (yr)	Allowable Internal Pressure[a] (psi)	Allowable External Pressure[b] (psi)
0	210	110
1	190	90
2	170	70
3	150	55
4	130	40

[a]Pressure required to produce stress equal to one-half the yield strength at 600°F.

[b]Approximately one-fourth the collapsing pressure.

3.3 REACTOR PRESSURE VESSEL AND BLAST SHIELD

3.3.1 General Description

The reactor pressure vessel, shown in Fig. 3.3, is a 60-in.-ID spherical vessel designed for 2500 psi at 600°F. Located concentrically within the pressure vessel is the 32-in.-ID core tank. Blanket fluid, at approximately the same pressure as the core fluid, occupies the annular space between the core tank and pressure vessel. A water-cooled blast shield (see Sec 3.3.4) which surrounds the pressure vessel has the twofold purpose of containing vessel fragments in the event of vessel rupture and of controlling temperature gradients in the vessel during operation.

Based on design data and specifications supplied by ORNL, the Newport News Shipbuilding and Dry Dock Company designed and fabricated the vessel assembly according to ORNL Specification HRT-1032.[6] Upon completion and inspection, the vessel was certified and stamped according to the rules and construction requirements of the ASME Boiler and Pressure Vessel Code for Unfired Pressure Vessels.

Considerable development of fabrication techniques was necessary to build the vessel. Among the unusual features were the forming of the stainless-steel-clad hemispherical heads from which the vessel was fabricated; the closure-joint girth weld, which had to be made entirely from the outside; the attachment of stainless steel nozzles to the stainless-steel-clad carbon steel vessel; a bellows expansion joint for absorbing the differential expansion between the core tank and pressure vessel; and mechanical transition joints for joining the core tank to the reactor vessel. The details of the development of the design and the fabrication techniques are reported in the periodic progress reports submitted by the vessel fabricator.[7] A detailed fabrication history of the fabrication techniques, procedures, material mill reports, inspection reports, tests, etc., was issued for reference.[9]

The vessel diameter was originally specified as 56 in. (resulting in a 12-in.-thick reflector), a compromise between the high neutron leakage of a thin reflector and the high D_2O inventory of a thick reflector. However, the diameter was later increased to 60 in. so that existing forming dies could be used by the vessel supplier. The nominal 4-in. thickness of the base material of the internally clad vessel wall was determined on the basis of a steady state pressure and thermal stress analysis.[41-43] The 0.4-in. nominal thickness of the clad material was determined primarily from welding considerations. Since closely matched weld bevels are required for preplaced consumable root inserts, an additional thickness (approximately 0.3 in.) above that required for corrosion resistance was specified as a localized machining allowance to compensate for head-forming manufacturing tolerances. (During fabrication, the hemispherical heads were locally machined, as shown in Fig. 3.3, on the inside surface at the closure joint to form a true circular cross section.) The additional thickness of clad material would also be beneficial in producing the desired chemical composition in the deposited metal at the root of the weld.

The hemispheres were pressed and hot-spun from 10% roll-clad plate by the Lukens Steel Company. ASTM A-212 grade B, Firebox Quality material, manufactured in accordance with ASTM A-300 requirements for aluminum-killed, fine-grained, low-temperature practices, was specified for the base material. Columbium-stabilized (niobium-stabilized) 18-8 stainless steel (ORNL Specification HRP-260a[6]), which conformed essentially to ASTM A-167, was specified for the clad material.

Irradiation studies of pressure vessel steels and welds indicated that radiation damage to the base material could be expected in the fast-neutron dose range anticipated for the reactor vessel.[44,45] Of particular concern in the vessel design was the appreciable increase in the transition temperature for brittle-to-ductile type failures as a result of accumulated radiation dose. Since the operating temperature of the vessel would be in the range of 100 to 600°F, it was believed that the probability of a brittle-type failure would be decreased if the vessel were

constructed from material with, initially, a low transition temperature. Consequently, the A-300 manufacturing practices were specified for the base material to obtain a low transition temperature as measured by impact tests.

Several methods for attaching the nozzles to the vessel were investigated and discarded because of the excessive stresses that arise from the differential expansion of the carbon steel–stainless steel connection.[7] The design that was finally selected favored simple fabrication and incorporated a safety feature to prevent ejection of the nozzle in the event of weld failure. The design consists of a single strength weld at the inside surface of the vessel, with the weld groove extending through the clad material into the base material (shown in Fig. 3.4). The safety feature, a bayonet-type shear ring located near the outer surface of the nozzle reinforcement, may be seen in Fig. 3.3. Before final acceptance of this attachment design, a full-sized model was tested by thermal cycling the stainless steel nozzle at 200 to 500°F while the carbon steel portion of the mock-up was maintained at 300°F. The mock-up of the joint was cycled 2000 times (a factor of two greater than the design specification of 1000 temperature cycles) without evidence of impending failure.[7]

The two blanket-fluid inlet nozzles contain flow-directing inserts, designed so that the inlet fluid sweeps across the bottom of the reactor vessel and thus prevents the accumulation of sedimentary solids. Fluid exits from the top of the vessel through a single outlet nozzle, designed to promote circulation through the uppermost portion of vessel and to prevent accumulation of sedimentary solids on top of the core tank.[46] The axis of the other nozzle at the top of the vessel is parallel to the north-south axis of the spherical vessel so that it may serve as an access port for the insertion of instruments, probes, or experimental devices (see Sec 3.3.5) into the blanket region.

Specially designed stainless steel flanges are attached to the vessel at the north and south poles to accommodate the external piping connections to the core tank. These flanges, which are designed for 2500 psi at 600°F, in compliance with the flange design rules of the ASME Boiler and Pressure Vessel Code, are attached to the vessel in a manner similar to that of the stainless steel nozzles described above. In designing these flanges, a conservative value of 11,500 psi – 75% of the ASME code allowable stress for stainless steel at 600°F – was used as an allowable stress to include, in some manner, the effects of radiation-induced thermal stress. The top flanged connection permits removal of the vessel dome for inspection of the bellows expansion joint. A smaller flanged port on top of the dome serves as an access port[47] to the core tank (see Sec 3.3.5). The flanged connection at the bottom of the vessel has provisions for a seal weld, which was made just prior to reactor critical operation.

The effects of temperature gradients and thermal cycling on flange gasket leakage were minimized by the use of ferrules in conjunction with the flange bolts. By adjusting the length and the cross-sectional area of the ferrules, the effective length of the flange bolts was doubled, and flexibility of the bolted-flange assembly was increased.

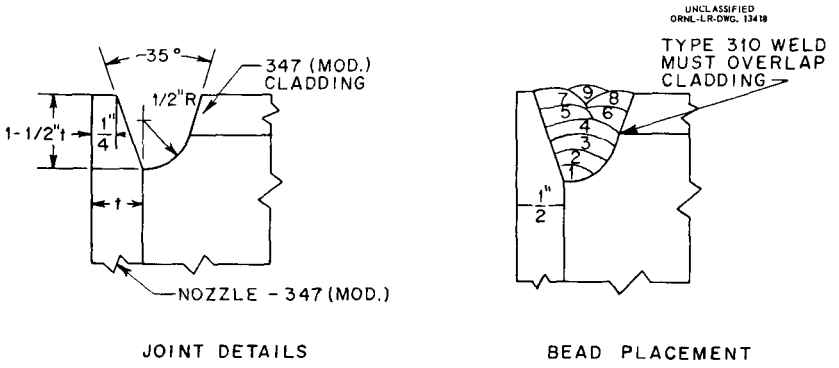

Fig. 3.4. Weld Design for Dissimilar-Metal Joints.

A bellows expansion joint was designed into the reactor vessel assembly to absorb the differential expansion between the core tank and the pressure vessel. The bellows were located (Fig. 3.3) so they would be accessible for inspection after reactor operation by removal of the top dome flange. Estimates of the free deflection of the bellows were made for several temperature combinations.[41]

Material	Average Coefficient of Expansion [in. in.$^{-1}$ (°F)$^{-1}$]	Length of Material (in.)
Zircaloy-2	3.61×10^{-6}	98
Carbon steel	7.22×10^{-6}	66
Stainless steel	9.83×10^{-6}	32

The results of these calculations are presented in Table 3.5 and are based on the bellows being installed with zero deflection at room temperature.

Based on these calculations and the allowable core-tank pressure differential, a two-ply, formed, stainless steel bellows expansion joint was specified for the design conditions given in Table 3.6. The unit, fabricated by Zallea Bros., has five 2-ply corrugations; each ply is 50 mils thick.

Table 3.5. Bellows Deflection for Various Temperature Combinations

Core Tank Temperature (°F)	Pressure Vessel Temperature (°F)	Bellows Deflection (in.)
72	72	0.000
572	372	0.060
572	600	0.232
450	600	0.293
350	600	0.340

Table 3.6. Bellows Expansion-Joint Design Criteria

Temperature, °F	600
Pressure differential, psi	±200
Axial deflection fron neutral point, in.	±0.310
Corrosion allowance, in.	0.020
Minimum number of cycles to failure	1000
Material specification[a]	HRP-240a
Weld specification[a]	HRP-4

[a]See ref 6.

Three expansion joints were purchased: one was tested to failure by cycling; one was inserted in a loop for dynamic corrosion testing under cyclic conditions of temperature and mechanical deflections; and the third was installed in the reactor vessel assembly. In the cyclic failure test, the bellows joint was tested at 600°F with 200 psi external nitrogen pressure; the time for each cycle was 40 sec. The unit was cycled approximately 37,000 full cycles of travel (±5/16 in. from neutral position) before both plys of the bellows failed.[48] Indications of failure of one ply occurred at about 35,000 cycles. Details of the corrosion test facility and results of the first test have been reported;[49] results of subsequent tests have also been reported.[50–52] Total exposure of the bellows–transition joint mock-up was 9153 hr, including 8600 hr on simulated fuel solution, 312 thermal cycles at 100 to 300°C, and 518 mechanical deflections. The results of this extended test indicated no severe corrosion problems.

Cyclic tests and spring-constant measurements were performed on a similar Zallea bellows by the core vessel fabricator to establish the spring force imposed on the core tank by the bellows during operation. The spring constant was found to be about 4000 lb/in., depending on temperature and differential pressure.[7] This unit was cycled 3000 times at temperature and pressure; the test was stopped without evidence of failure at this point, since the design life had been exceeded considerably.

Another unusual mechanical design feature of the reactor vessel is a transition flange for joining the Zircaloy-2 core inlet and outlet pipes to the stainless steel portion of the pressure vessel. At the time the reactor core tank and pressure vessel were being designed and fabricated, there was no known acceptable method for metallurigically joining the two dissimilar materials. (Coextruded tubular transition joints are presently available from Nuclear Metals, Inc.[53])

Leakage across the seal separating the core region from the blanket region was not considered to be serious from a safety standpoint; however, excessive leakage could encumber reactor operation. Therefore an allowable leak rate of 1 cm^3 of liquid per day was specified for a differential pressure of ±200 psi.

Several designs were investigated and tested before a satisfactory joint design was developed.[54,55] One of the most difficult problems to overcome in the design of a leak-tight gasketed joint between dissimilar materials is the radial differential expansion. In the course of flange testing, it became obvious that the usual concepts of gasketed joints would not satisfy the requirements under cyclic temperature conditions. The flange design which evolved from this development[55] and which was installed in the reactor vessel is shown in Fig. 3.5.

Radial differential expansion is absorbed by bending in a laminated, cylindrical A-55 titanium gasket. The ends of the gasket are tightly fitted into machined grooves in the mating flanges to prevent rotation and relative radial movement. Gold gaskets, 5 mils thick, are placed at each end to effect a seal at a relatively low gasket seating stress. The cylinder is constructed of closely fitted concentric rings to lower the bending stresses by allowing (theoretically) relative axial movement of the rings when one end of gasket is deflected radially (without rotation) with respect to the opposite end. Titanium was selected for the gasket material because it has good corrosion resistance, a low modulus of elasticity, and a coefficient of thermal expansion intermediate between those of Zircaloy-2 and stainless steel.

Ferrules are used in conjunction with the bolts to effectively increase the bolt lengths, thus increasing the elastic properties of the gasketed joint under cyclic temperature conditions. The lengths of the Ti–6% Al–4% V bolts and ferrules are proportioned to nullify the longitudinal expansion differential between stainless steel and Zircaloy-2.

Two such joints were tested, and the results indicated the joint was of supperior design for cyclic temperature conditions. One joint was cycled 212 times at 100 to 300°C with 50 psi pressure differential.[55] The test was constantly monitored for leakage, which was considerably less than 1 cm^3 of water per day. After the 212 thermal cycles were completed, 50 psi of helium was applied to the joint; and no leakage was detected by a mass spectrometer.

The other joint was tested in connection with the bellows expansion joint as previously described. The results of a series of tests in which the joint was thermally cycled 312 times at

UNCLASSIFIED
ORNL-LR-DWG 12029

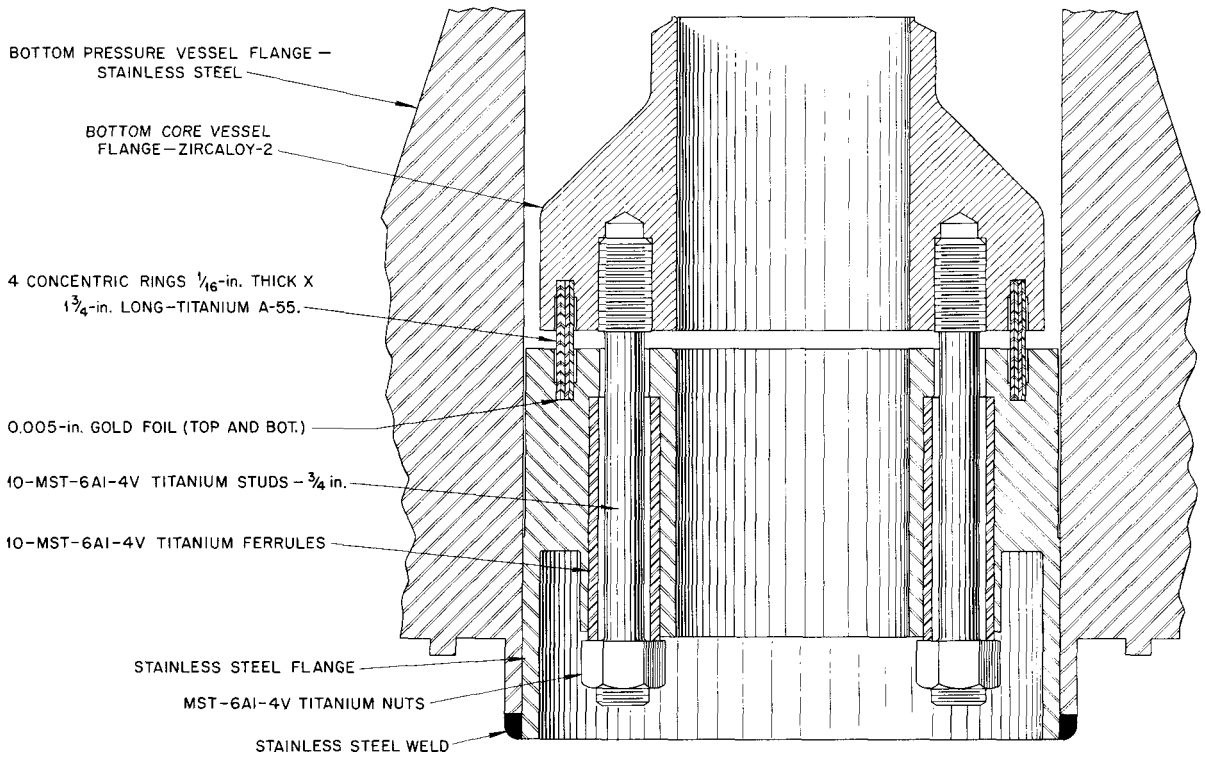

Fig. 3.5. Zircaloy–Stainless Steel Transition Joint.

100 to 300°C over a total test period of 9153 hr also indicated superior performance of the flanged joint under expected operating conditions.[49–52]

The reactor vessel was shipped to ORNL, where final machining and assembly of the Zircaloy-2 to stainless steel transition joints were performed. In the assembly of these joints, the flanges were bolted to the core tank and tested for leak tightness before the stainless steel portions of the flanges were welded to the pressure vessel. Since the galling tendency of the titanium bolts in the transition flanges precluded the use of torque measurements as an indication of bolt loading, bonded-wire strain gages were temporarily attached to the bolts to determine the magnitude of the applied gasket force.

When the conceptual design of the reactor vessel was undertaken, a suitable design of a leak-free pressure-vessel flanged closure which would permit remote removal and replacement of the core tank had not been developed. All the known designs which were applicable to the intended use had serious objectional characteristics which, if overcome, would require extensive design and development. Consequently, it was decided that the reactor vessel design would not include provisions for removal and replacement of the core tank separate from the removal and replacement of the entire reactor vessel assembly.

This decision resulted in perhaps the most difficult problem encountered in the fabrication of the reactor vessel, namely, that of producing the closure-joint girth weld in its entirety from the outside. This was in contrast to the usual fabrication procedure of welding the clad material from the inside after completion of the base material weldments. The details of the development of the welding procedure are reported in the periodic progress reports.[7] The joint design of the vessel

girth weld is shown in Fig. 3.6. No porosity or inclusions of any sort were permitted in the stainless steel weld layers in contact with process solution. In all other welds, the porosity was limited to one-half that permitted by the ASME Boiler and Pressure Vessel Code standards. Final stress relief of the closure joint was carried out at about 975°F for 25 hr.

A fuel bypass is provided to purge the volume external to the bellows in the top dome of the vessel assembly. The source of this stream is a connection on the core inlet flange at the bottom of the vessel. Similarly, a blanket bypass is provided to purge the annulus between the inside diameter of the bellows and the outside diameter of the core exit pipe. A concentric baffle is provided in this annular region to ensure that the uppermost portion of this volume is purged of gases.

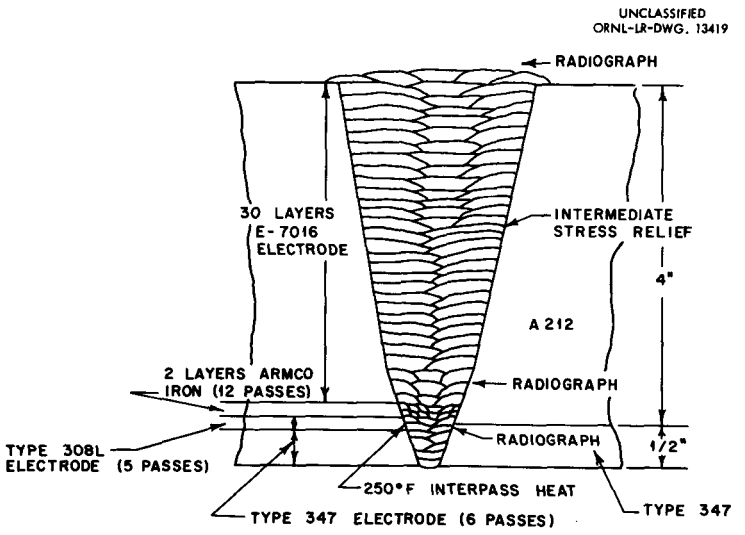

Fig. 3.6. Joint Design and Bead Sequence of Final Closure Weld.

3.3.2 Heat Production in Vessel Wall

Calculations of the heat produced by radiation absorption in the vessel wall were performed[41] by methods reported in detail elsewhere.[56] Using appropriate neutron flux distributions (see Sec 6.2), calculations were made for a 5-Mw reactor with a D_2O reflector, a blanket solution of 300 g per liter of UO_2SO_4 (depleted uranium), and a ThO_2 slurry blanket. Table 3.7 gives the assumed radiation sources, energies, distributions, and incident currents for the D_2O-reflected reactor. The heat generation rates for these sources are shown in Fig. 3.7 as a function of distance into the vessel wall. (Note: 1 wsec = 6.24×10^{12} Mev.) On the basis of the calculations, the fast-neutron heating was negligible. Assuming 5 Mw core power, the heat production rates are compared in Fig. 3.8 as a function of position for the D_2O-reflected reactor and the reactor with a blanket solution of 300 g per liter of uranyl sulfate.

Since the radiation sources are proportional to the operating power, the heat production rates at other power levels can be found directly.

3.3.3 Pressure Vessel Stress Analysis

Both pressure and thermal stresses were considered in the design of the reactor vessel. With increasing wall thickness and with all other variables held constant, pressure stresses decrease,

Table 3.7. Photon Sources and Incident Currents at Pressure Vessel Wall

Gamma Source	Assumed Energy (Mev)	Assumed Distribution of Photons	Radiation Current Incident on Wall (gammas cm^{-2} sec^{-1})
Prompt fission	1	5 per fission, distributed proportionally to thermal flux in core	3.55×10^{11}
Fission product	2.5	2 per fission, distributed proportionally to average thermal flux in core	5.27×10^{11}
Fuel capture	6	1 per absorption in fuel constituents, distributed proportionally to thermal flux in core	1.01×10^{11}
Reflector capture	6	1 per D_2O absorption, distributed proportionally to thermal flux in reflector	1.14×10^{10}
Core tank capture	8.4	1 per Zr absorption, uniformly distributed	7.0×10^{9}
Vessel capture	7	1 per Fe absorption, distributed proportionally to thermal flux in vessel wall	2.16×10^{12}[a]

[a]Thermal neutron current entering vessel in neutrons cm^{-2} sec^{-1}.

and thermal stresses increase. At some particular vessel thickness, the sum of the pressure and thermal stresses will have a minimum value, dependent on the temperature distribution within the vessel wall. For a given wall thickness, it can be shown that the minimum stress condition is obtained when both surfaces of the wall are at the same temperature.[56] Furthermore, for a given wall thickness, it can be shown that the minimum stress is a linear function of the difference between the two surface temperatures. These facts permit the designer to bracket the thermal stress with relatively simple calculations for a given wall thickness.

Since the heat generation was greatest in the D_2O-reflected reactor, the stress analysis was based on that case. Thermal stress calculations were performed for a perfectly insulated vessel and for a vessel cooled to an optimum temperature at 5- and 10-Mw reactor operation.[41] The analysis of the stresses in the carbon steel was extended to take into account the effects of the stainless steel cladding in (1) reducing the heat production in the carbon steel by acting as a thermal shield and (2) effectively increasing the pressure against the carbon steel by virtue of the greater coefficient of expansion of stainless steel. Calculations were made over a range of thicknesses which included the maximum and minimum thicknesses of each of the hemispheres forming the vessel. (As accepted from the supplier, one head varied in thickness from 3.6 to 4.7 in. of carbon steel, with 0.5 in. of cladding; the other head varied from 3.7 to 4.9 in., with 0.5 in. of cladding.[9] The inside surface of the hemispheres was essentially spherical; the nonuniformity, resulting from the spinning operation, was in the outside surface profile.)

Stresses calculated for the vessel are shown in Fig. 3.9. A fluid pressure of 2500 psi (the actual operating pressure is less than 2000 psi) was used as a basis for the calculations; and the added pressure contributed by the cladding was calculated to be 780 psi at 600°F[57] resulting in

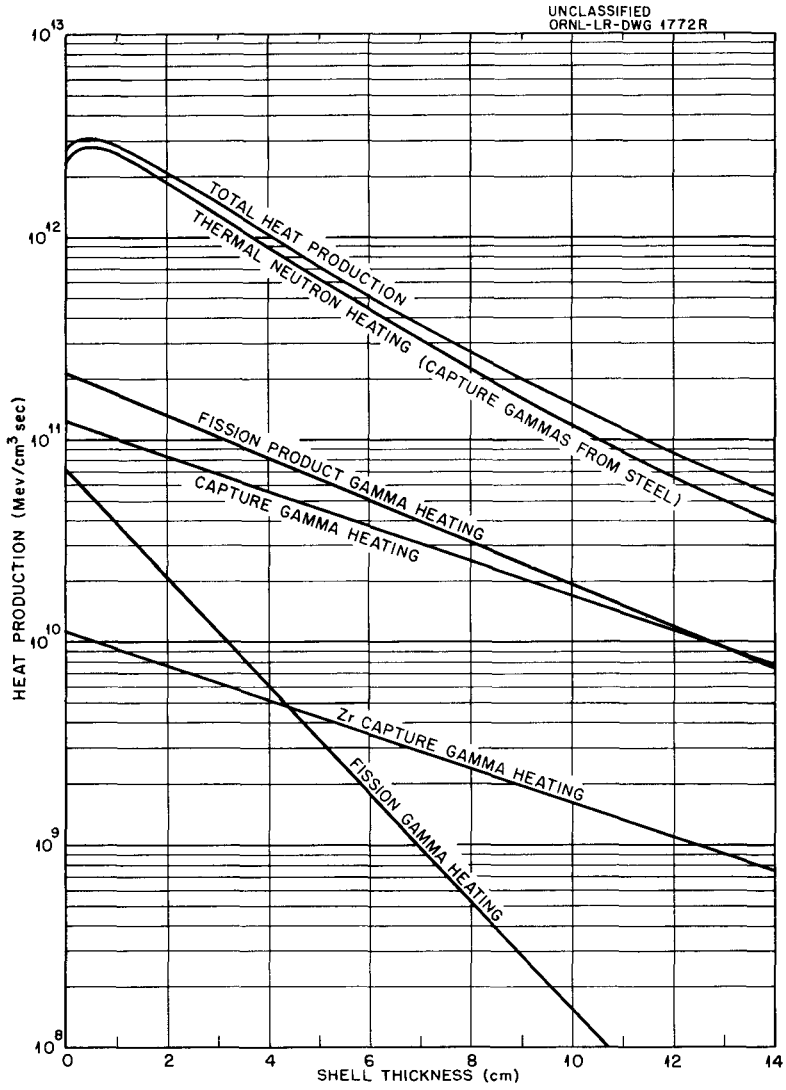

Fig. 3.7. Heating in HRT Vessel Wall Due to Various Radiation Sources at 5-Mw Core Power.

an effective design pressure of 3280 psi. For 5-Mw operation the sums of the calculated thermal and pressure stresses are shown to be within the 17,500-psi allowable value permitted by the ASME Boiler and Pressure Vessel Code. If the vessel is properly cooled, this is also true for 10-Mw operation. [Subsequent to the design of the vessel, a special interpretation of the ASME Code (Code Case 1234) permits the sum of the pressure and thermal stresses to be 1.5 times the allowable stress value, provided the pressure stress does not exceed the allowable value.]

During operation, the pressure vessel is cooled by heat radiated from the outside surface of the vessel to the blast shield and by transferal of heat to the blanket solution at the inside surface. Combined thermal and pressure stress calculations were made;[58] the results are shown in Fig. 3.10 as a function of the temperature difference across the vessel wall. Figure 3.11 shows the maximum combined stress in the vessel wall as a function of the outside surface heat flux.

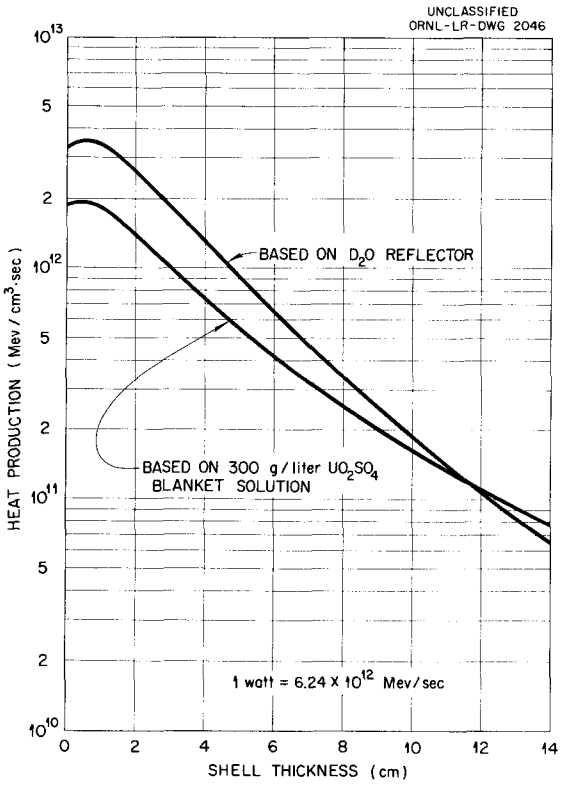

Fig. 3.8. Heat Production in HRT Pressure Vessel Wall.

The effects of power level and heat removal from the vessel wall by the blanket solution were investigated.[59] It was predicted that at the higher power levels (>5 Mw) the major portion of the heat produced in the vessel wall would be removed by the blanket solution. Figure 3.12 shows computed temperature profiles for 1-, 5-, and 10-Mw operation. Figure 3.13 shows the maximum combined stress in the vessel wall as a function of power level.

Subsequent to initial reactor operation, a revised analysis of the pressure and thermal stresses in the reactor vessel was made, using the methods and techniques considered to be most applicable at the time.[60] The results of this analysis indicated that the thermal stress was somewhat higher (approximately 4000 psi) than originally estimated.[41] The increased stress resulted from a somewhat greater calculated heat generation rate and its distribution and from the method of treating the vessel cladding. The increased thermal stress was more than offset by the recomputed pressure stress, since the total stress was about 1000 psi less than originally reported. The primary difference in the treatment of the pressure stresses was in the effect of the cladding. At the same time the stress analysis was being reviewed, some measured pressure vessel temperatures were analyzed in an attempt to infer the value of the thermal stress and evaluate the cool; ing system performance.[61] The evaluation of the temperature data indicated satisfactory performance by the cooling system. Estimates of the thermal stress ranged from 1800 psi at low power to about 6800 psi at 5 Mw. Although the thermal stress was higher than predicted,[41] it was not considered excessive in this power range. A heat generation rate of 108,000 Btu hr^{-1} Mw^{-1} in the vessel wall was estimated from an overall heat balance inferred from the data.[61] (Provisions are not available for measuring the heat removed from the vessel wall by the blanket solution.) This value is to be compared with the originally estimated heat generation rate of 91,500 Btu hr^{-1} Mw^{-1} [59]

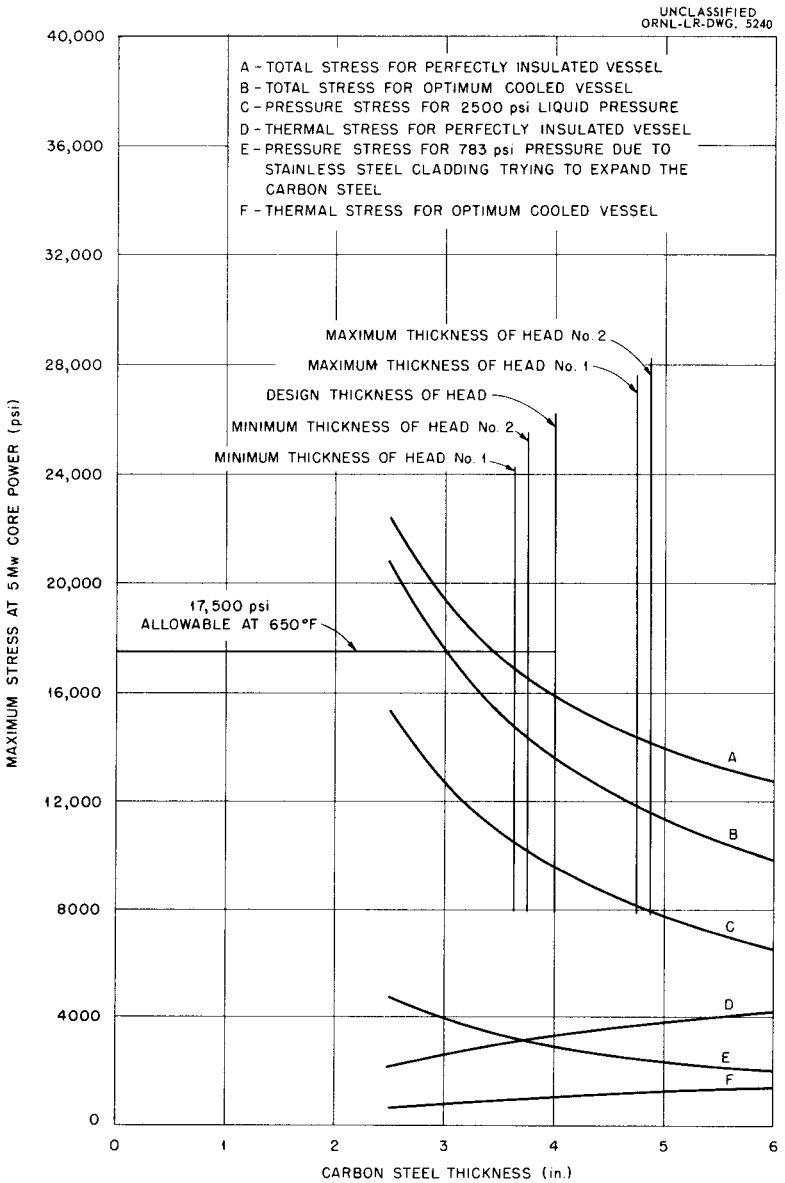

Fig. 3.9. Stresses in Carbon Steel Wall of HRT Pressure Vessel.

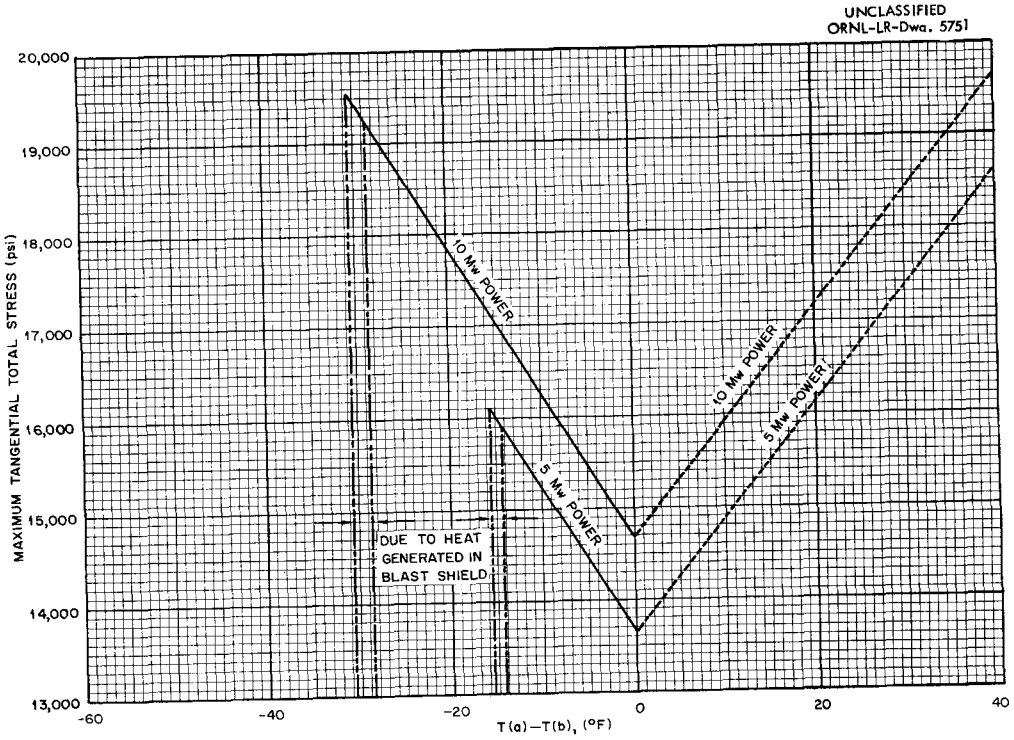

Fig. 3.10. Maximum Tangential Total Stress in Pressure Vessel Wall vs Difference in Surface Temperature from Inside to Outside.

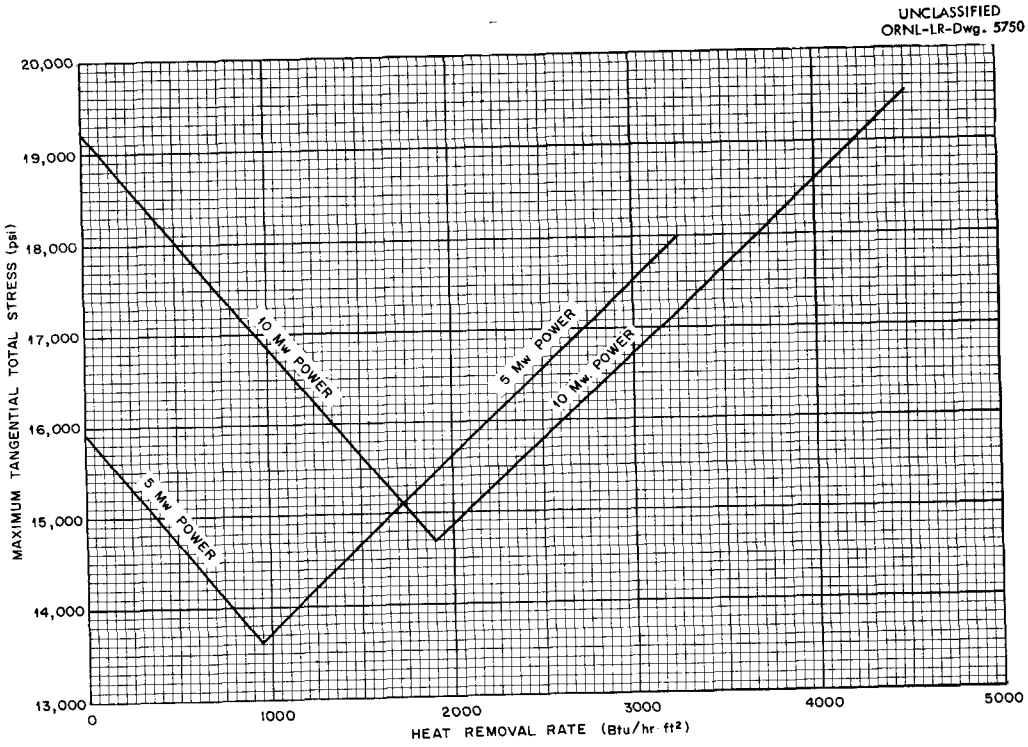

Fig. 3.11. Maximum Tangential Total Stress in Pressure Vessel Wall vs Heat-Removal Rate Based on Outside Surface.

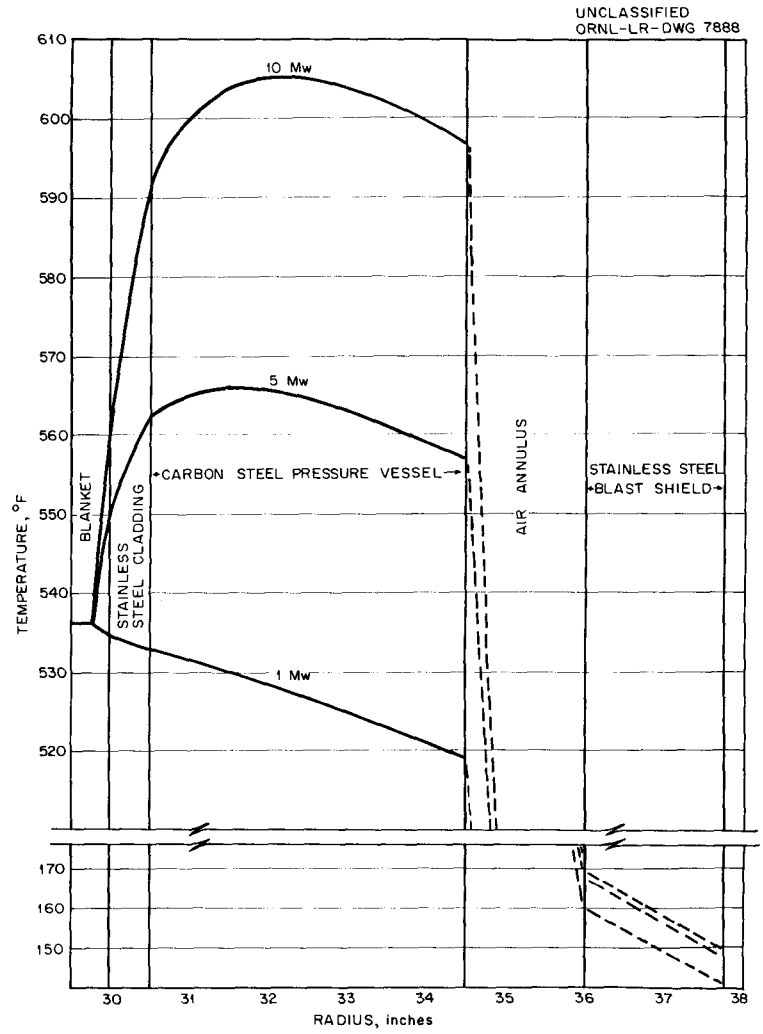

Fig. 3.12. Computed Temperature Profile Across Pressure Vessel Wall (for D_2O Blanket).

An analysis of the pressure vessel heating and thermal stress during reactor shutdown was made for two limiting conditions.[62] At one extreme, the core was considered to continue to operate at 5 Mw while the reflector level was lowered, thus exposing the vessel wall to direct radiation from the core. It was estimated that the thermal stress would be 3900 psi and the total stress about 13,000 psi. Under these conditions, the temperature rise of the reactor vessel would be about 6°F/min. At the other extreme, the power level was considered to drop immediately to a low level and leave only the fission-product-decay gammas as the radiation source. Under these conditions, the thermal stress was estimated to be about 325 psi. The average temperature rise would be about 0.6°F/min.

The time-dependent thermal stress in the pressure vessel wall was investigated to determine the maximum rate of temperature change during reactor startup and shutdown.[63] Figure 3.14 shows thermal stress as a function of the rate of change in the surface temperature. As a result of this investigation, it was recommended that the rate of change in pressure vessel temperature be limited to 50°F/hr during heating and cooling cycles.

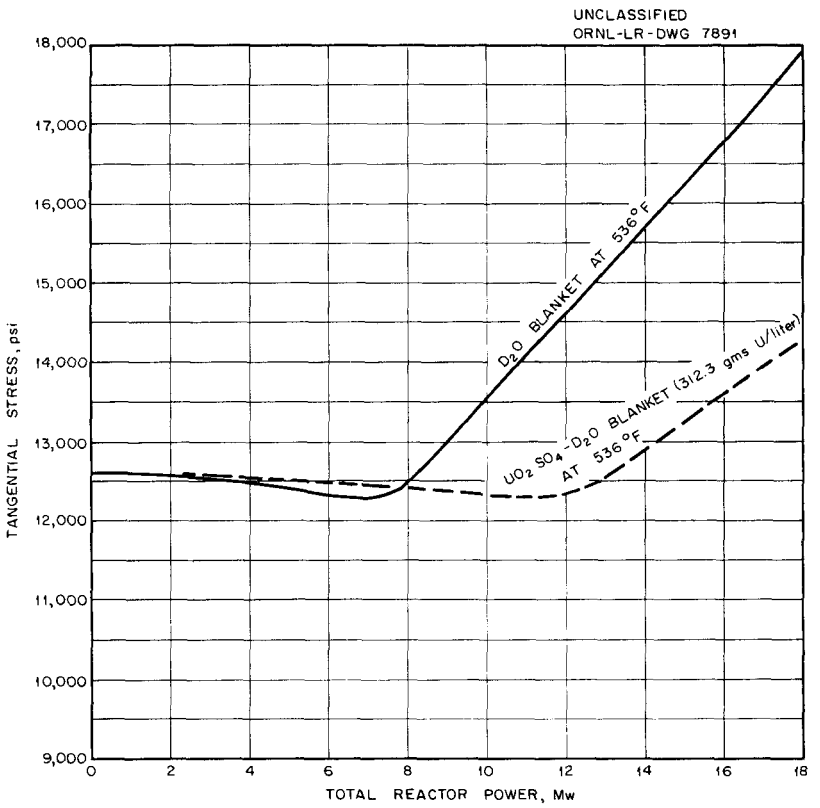

Fig. 3.13. Maximum Total Tangential Stress in Pressure Vessel Wall vs HRT Power Level.

3.3.4 Reactor Vessel Blast Shield

The effects of radiation on carbon steel increase the nil ductility transition temperature and lessen the total energy-absorption capacity of the steel to plastically deform before failure under multi-axial stresses. Since data on the irradiation of pressure vessel steels were meager at the time[44,45,64] and the consequences of failure severe, it was recommended that the pressure vessel be designed for a brittle-type failure.[65] A study[66] of the probable effects of a brittle fracture of the pressure vessel indicated that a fragment of the vessel weighing about 1400 lb could cause failure of the biological shield restraints and thus permit leakage of radioactive materials.

As protection against this hazard, a blast shield was constructed around the outside of the pressure vessel as shown in Fig. 3.15. Since austenitic stainless steels retain a substantial portion of their ductility during irradiation, material which conformed to ASTM-A-240, grade S, type 304 and which had a minimum thickness of 1.5 in. was specified for the blast shield.[67]

In determining the thickness of the blast shield, the pressure in the shield was expected to rise immediately to 1250 psi (saturation pressure at 300°C) after a sudden release of the pressure vessel contents. The energy-absorption capacity of the 1.5-in.-thick shield was estimated to be about 40×10^6 ft-lb, several times greater than the estimated requirement.

The blast shield is separated from the pressure vessel by an annulus with a maximum width of 2 in. The reactor vessel is supported inside the shield on a support ring (see Fig. 3.15); the entire assembly is supported by three brackets attached to the outside of the blast shield.

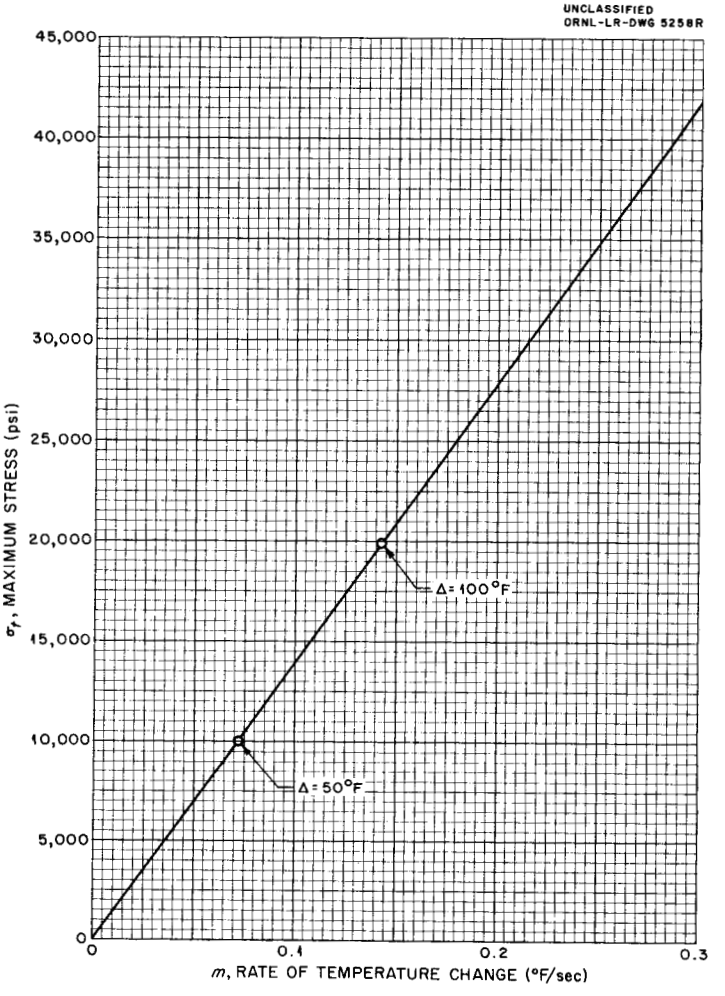

Fig. 3.14. Maximum Thermal Stress in Pressure Vessel Wall vs Surface Heating or Cooling.

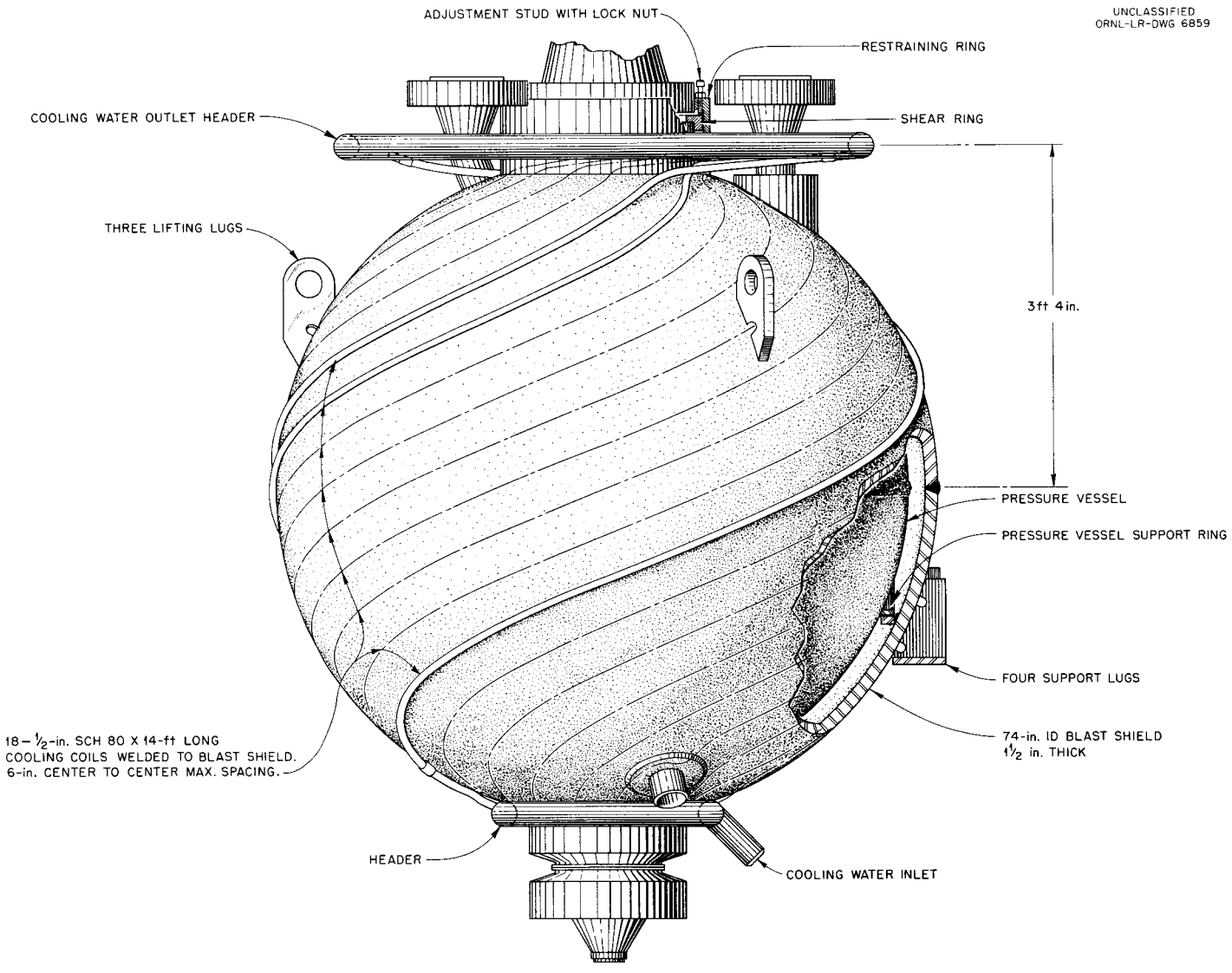

Fig. 3.15. Blast Shield and Cooling Coils.

Spirally wound (for equal spacing) cooling coils, ½-in. Sched 80 pipes, about 14 ft long, are welded to the outside of the blast shield to remove heat generated in the shield and pressure vessel. Figure 3.16 shows estimated temperature profiles in the blast shield for a heat removal rate of 2000 Btu hr^{-1} ft^{-2} of the outside area of the pressure vessel. Since most of the heat which dissipated to the shield is transferred by radiation across the annulus separating the vessel and shield, the temperature variation in the shield causes only small changes in the total stress of the vessel wall (approximately 100 psi in 15,000 psi). Assuming all the heat is removed via the blast shield cooling coils, the estimated time required to cool the vessel to a particular temperature after a dumping operation is given in Table 3.8.[63]

Table 3.8. Time Required to Cool Pressure Vessel from 600°F to a Particular Temperature (T)

T (°F)	Time (hr)
600	0
500	1.9
400	4.8
300	9.8
260	13.0
240	15.0
200	20.4

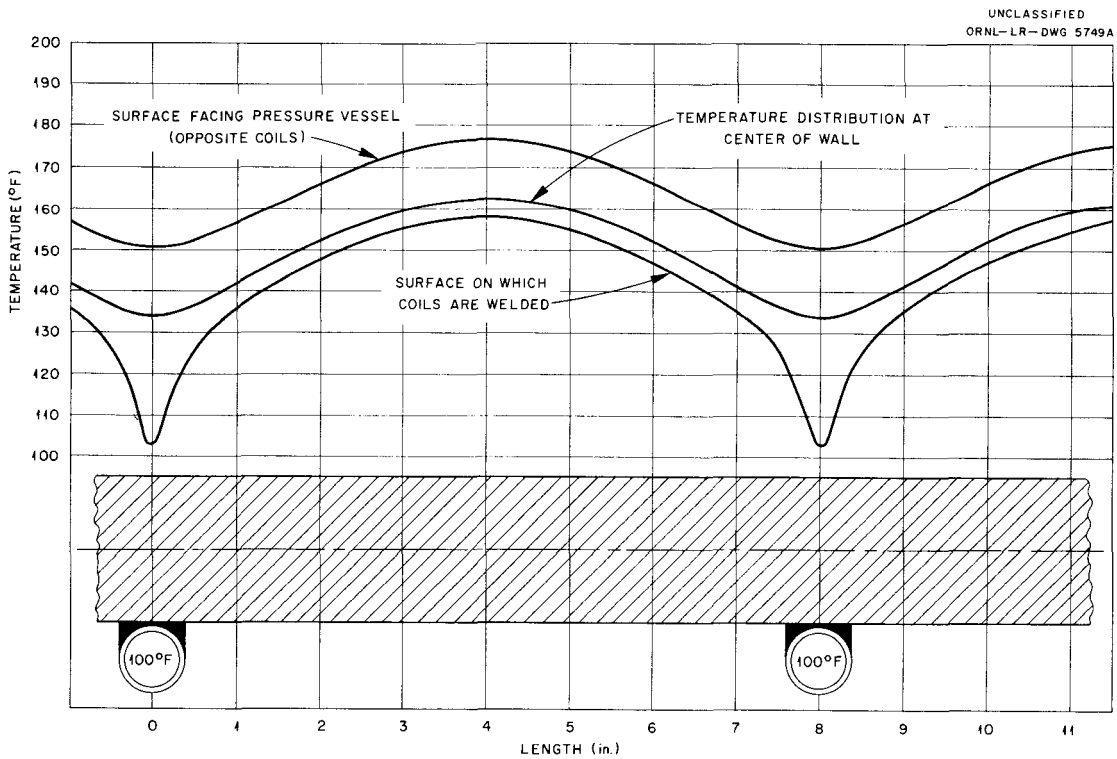

Fig. 3.16. Temperature Distribution in Blast Shield for Heat-Removal Rate of 2000 Btu hr^{-1} ft^{-2}.

In the blast shield design, the possibility of a shear-type failure of the top flange assembly was considered. A restraining ring was provided to prevent ejection of the assembly in the event of such a failure. Similarly, shear-type failure of the bottom flange could cause the assembly to be lifted off the support structure by the reaction force of the fluid being ejected from the vessel through the opening. It was estimated[68] that a 50,000-lb restraining force would be necessary to prevent upward movement of the vessel under these conditions.

Additional specifications for the design and construction of the blast shield are given in ORNL Specification HRT-1098.[6] Details of the fabrication procedures and techniques are reported.[7,9]

3.3.5 Core and Blanket Corrosion Specimen Holders

Corrosion specimen holders were designed[69] for insertion into the core and blanket regions of the reactor pressure vessel (shown in Fig. 3.17). The method of mounting the metallurgical specimens in the holders is shown in Fig. 3.18. Twenty-four specimens are located in the core, twenty-four in the core exit pipe, and twenty-four in the blanket region.

The main structural member of the holder is designed with a Y cross section to obtain a maximum surface-to-volume ratio consistent with strength requirements. This permits better cooling of the member and minimizes the possibility of localized surface boiling. Estimates of the surface temperature of the member above the fluid temperature indicated that bulk boiling would not occur for operating pressures greater than 1540 psia.[70,71] The effects of the core sample holder or flow pattern and pressure drop were investigated in a flow model of the core tank and appeared to be satisfactory.[72]

The maximum induced activity in the core specimens and specimen holder was estimated to be 600 r/hr at 6 ft, assuming reactor operation for one year at 10 Mw, or 120 r/hr at 6 ft after three months of operation at 5 Mw.[73] The activity of the fission products adhering to the holder was estimated to be 60 r/hr at 6 ft. Special coffins with 7 in. of lead for gamma shielding were constructed for use in withdrawing the specimen holders from the reactor. Segmenting and special handling equipment for recovery of the specimens were provided in a storage pool adjacent to the reactor cell.[74]

The upper portion of the blanket specimen holder was modified to permit insertion of a neutron source, as indicated in Fig. 3.17.

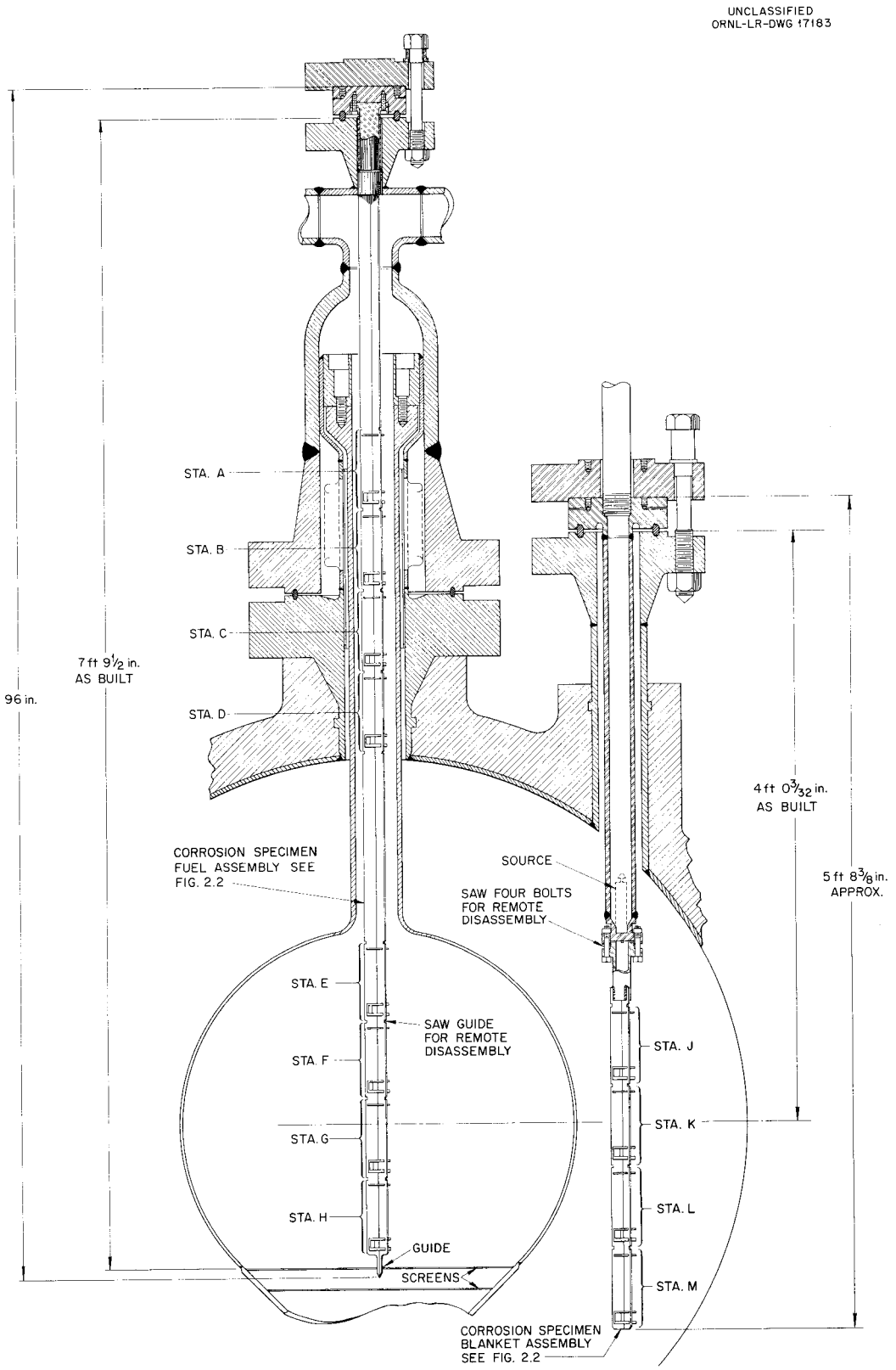

Fig. 3.17. Corrosion Specimen Holders in HRT Core and Blanket Regions.

UNCLASSIFIED
ORNL-LR-DWG 17184

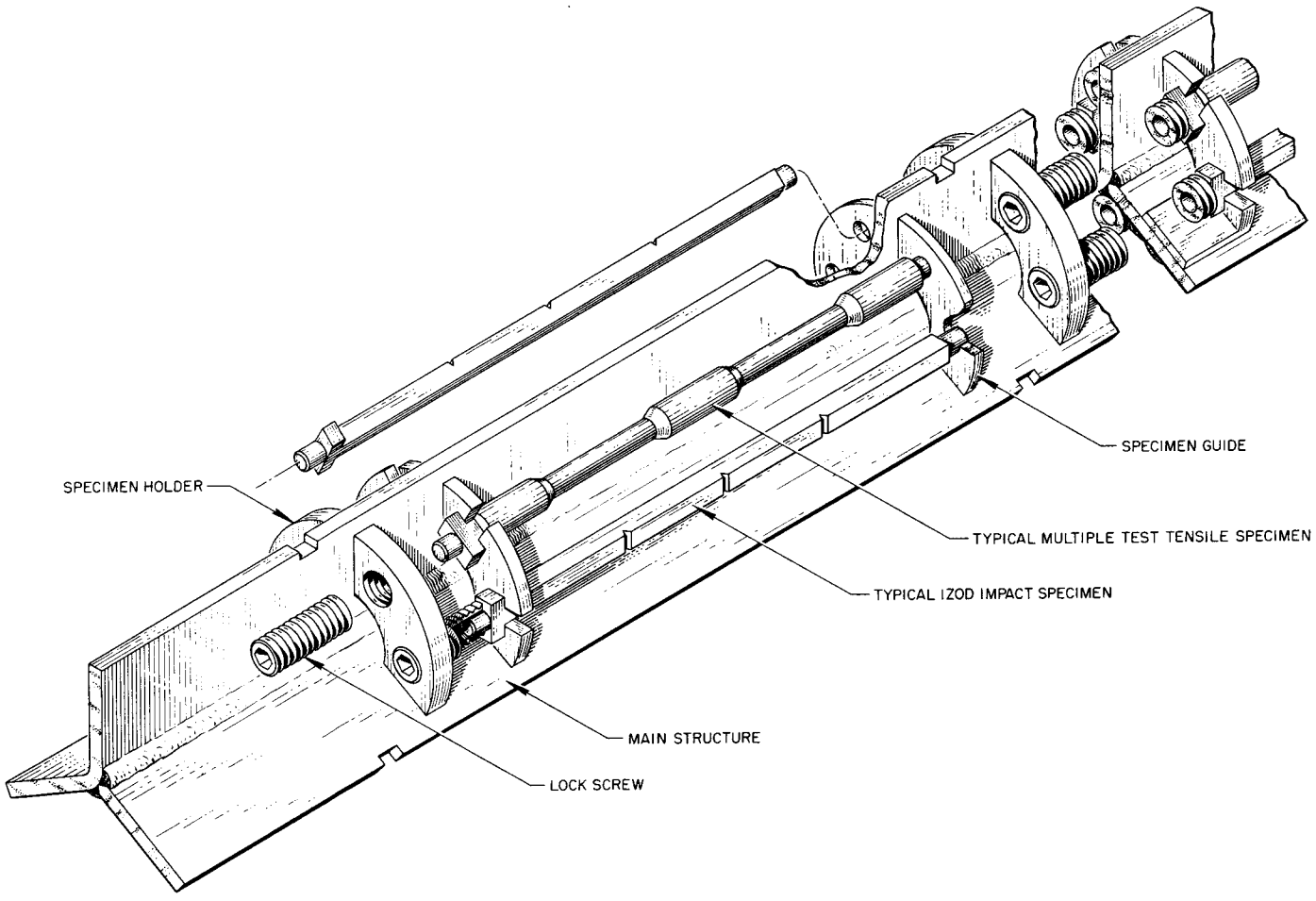

Fig. 3.18. Typical HRT Corrosion Specimen Station.

3.4 FUEL AND BLANKET PRESSURIZERS AND AUXILIARIES

3.4.1 Introduction

The pressurizers provide (1) surge volumes into which fluids can be expelled by their sudden expansion in the core or blanket and (2) a means of applying an overpressure to the reactor systems to limit the formation and growth of radiolytic gas and steam bubbles. In HRE-2 the fuel and blanket high-pressure systems are designed to operate normally at a maximum of 2000 psi (2500 psi design pressure), which is 750 psi above the 1250-psi vapor pressure of water at the 300°C maximum operating temperature.

Since the functions of the fuel and blanket pressurizers are the same, the design of the two units is essentially identical. In the discussion which follows, emphasis is placed on the fuel pressurizer. Minor differences in the designs, which will be pointed out in the appropriate places, resulted from the initially planned mode of operation, that is, the use of a D_2O-reflected system.

3.4.2 Pressurizer Design Criteria

A suitable pressurization system for the HRE-2 must satisfy the following requirements:[75]

1. A gas cushion of sufficient volume that only a moderate pressure rise will be produced by the sudden expansion of fluid in the core or blanket region of the reactor must be provided. This requirement is intimately related to reactor safety and is discussed further in Sec 6.3.
2. A controlled pressure of up to 2000 psi must be provided on the system to prevent boiling and to minimize the volume of entrained gases in the core and blanket fluids.
3. The thin Zircaloy-2 core tank must be protected against excessive pressure differentials. The maximum permissible pressure differential between the fuel and blanket pressurizers was specified as 200 psi, with a differential of less than 50 psi being desirable during normal operation. These requirements for pressure equalization also apply to periods of startup, shutdown, and dumping.
4. Cross contamination of the core and blanket fluids should be avoided; however, mixing and transfer of D_2O vapor between the two pressurizers is permissible.
5. A reliable and sensitive means of determining the liquid level in the pressurizers must be designed into the system.
6. The pressurizing system must be designed and operated so that explosive mixtures of radiolytic gas do not collect in the pressurizers during any phase of reactor operation, including dumping operations. This requirement necessarily implies that a means for the detection of noncondensable gas buildup be included in the design.

3.4.3 Design Basis for Pressurizer Volume

Since the effect of an increase in pressurizer pressure is to lower the ejection rate of fluid from the reactor core during a power surge, a correspondence exists between maximum core pressure and pressurizer vapor volume. Inertial effects cause the maximum pressure in the core to occur a short time before that in the pressurizer, so that, under a given set of initial conditions, the increase in maximum core pressure as a function of decreasing pressurizer vapor volume is not directly related to the increase in maximum pressure in the pressurizer.

Equations of motion describing the flow of fluid from the core to the pressurizer during a reactivity transient were analyzed, and it was assumed that during compression the pressurizing fluid behaved as a perfect gas.[76] The results of the analysis are shown in Fig. 3.19, where the resulting core-pressure rise is plotted as a function of equivalent instantaneous reactivity

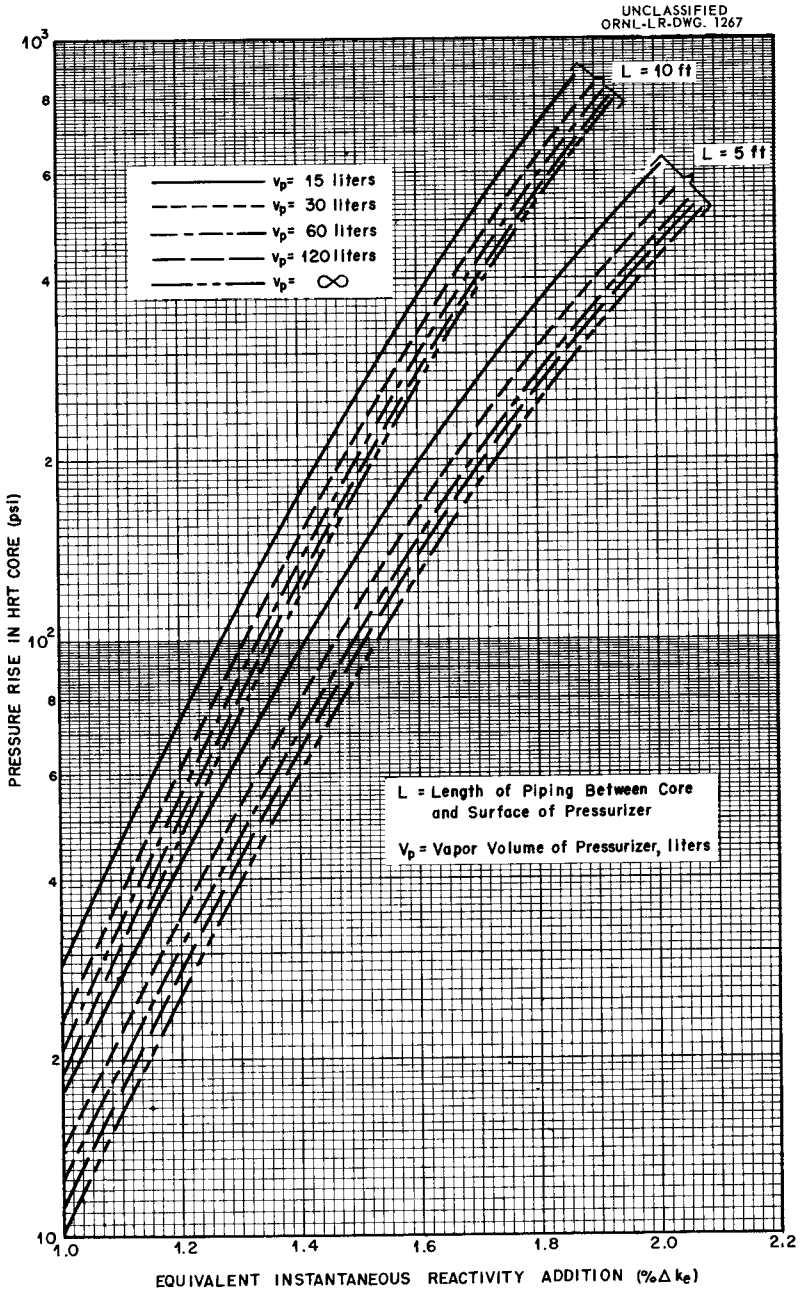

Fig. 3.19. Pressure Rise in HRT Core as a Function of Reactivity Addition, Volume of Pressurizer, and Length of Pressurizer Pipe.

addition, with pressurizer vapor volume and length of piping between core and pressurizer as parameters. The figure illustrates that little is gained by increasing the pressurizer vapor volume above 60 to 70 liters.

3.4.4 Early Pressurizer Design Studies and Tests

The requirement of a surge volume immediately suggests the desirability of a liquid-gas interface in the pressurizer, with steam or gas or a mixture of the two as the pressurizing medium. However, a brief investigation of a mechanical pressurization system was made in which it was concluded that such a system would not be practical for HRE-2.[77]

The use of a gas pressurization system would be advantageous because:[75,78]

1. It would be unnecessary to boil fuel solution (or condensate, as was later done) in the pressurizer at 335°C in order to achieve the desired operating pressure of 2000 psia.
2. Pressure changes during a dumping operation would be more gradual.
3. Pressure equalization between the two pressurizers could be accomplished safely by an open equalizing line; efficient entrainment separators would be used to prevent cross contamination of the two systems except in extreme situations.

Disadvantages of a gas pressurization system are:[75,78]

1. Detection of an explosive mixture of radiolytic gas in the pressurizer is more difficult.
2. Large quantities of radioactive noncondensable gases must be disposed of during a dumping operation.
3. Design and development of radioactive-gas handling equipment would be necessary.

Because of the difficulties involved in handling large quantities of noncondensable gases, it was decided to use steam pressurization in HRE-2, with the two pressurizers interconnected through pressure-relief devices. An electrically heated pressurizer was designed, built, and tested on the HRT mockup.[2,3,79] In this pressurizer, fuel solution was boiled in vertical heated pipes, which were connected in parallel between a lower distribution header and the pressurizer drum. Since one end of the distribution header was connected to the main circulating line and the other end was capped, there was no net flow of fuel solution through the pressurizer and heater legs.

Flow tests of various arrangements for connecting the distribution header to the main piping system showed mixing in the header and deposition of sedimentary solids.[80,81] Subsequent operation of the HRT mockup with the pressurizer as originally designed produced an excessive amount of uranium precipitation on the inside walls of the heater legs and considerable localized corrosion. When the heater legs were cut open for examination, it was found that two of the three legs were plugged and severely pitted.[79] It was concluded that a boiling fuel should not contact stainless steel surfaces having temperatures in excess of 300°C and that a new pressurizer design would be necessary.

Simultaneously with the redesign of the steam pressurization system, the Arthur D. Little Company was engaged to study the feasibility of and to produce a preliminary design of a gas pressurization system for HRE-2[75] a similar study was undertaken at ORNL.[78] Both of these studies concluded that a gas pressurization system was feasible and had both advantages and disadvantages, as previously discussed. Oxygen appeared to be the logical choice for the pressurizing gas for reasons of economy, operational experience, equipment design, and compatibility with the fuel solution.

While these studies were in progress, the steam pressurizer was modified and tested on the HRT mockup with satisfactory results; consequently, it was decided to continue the use of steam as the pressurizing medium.[82]

3.4.5 Modified Pressurizer Design

The modified pressurizer design,[83] shown in Fig. 3.20, consists of a surge volume and a separate steam generator, which are incorporated into an ~6.7-ft-long single pressure vessel constructed of 12-in. sched-160 pipe and pipe caps of type 347 stainless steel. This type construction was selected over a two-unit design because of its basic simplicity.

Feedwater for the fuel pressurizer comes from the recombiner condenser in the low-pressure system of the fuel. Calculations showed that a purge flow of 10 to 12 gph (90 to 108 lb/hr at 150°F) would be sufficient to prevent the buildup of an explosive mixture of radiolytic gas in the pressurizer.[84,85] A diaphragm-type feed pump (item 23) injects the feedwater, which normally would be preheated to about 280°C in the letdown heat exchanger, into the lower header of the steam generator for distribution to each of four heated legs.

To facilitate remote removal and replacement of the clamshell-type electric heaters, the heated legs of the pressurizer are inclined at an angle of 55° with the horizontal. Each of the four heaters has eight $\frac{3}{4}$-kw heater elements, giving an installed capacity of 24 kw on each pressurizer. A steady-state heat load of 12.4 kw was estimated[83] for each pressurizer at design conditions (4.4 kw for feedwater preheating, 6.6 kw for pressurizer heat losses, and 1.4 kw for direct heater losses to the cell). An additional 13 kw of heat is available for reactor startup, since the letdown heat exchanger provides essentially no preheating of the purge water under these conditions. Faster pressurization of the system at startup is achieved by reducing the feedwater pumping rate.

Of the total purge flow to the pressurizer, about 40 lb/hr is vaporized to provide the desired steam overpressure; the remainder overflows to the high-pressure-system circulating stream through the $3\frac{1}{2}$-in.-diam core connecting pipe. The overflow maintains the fuel concentration in the core

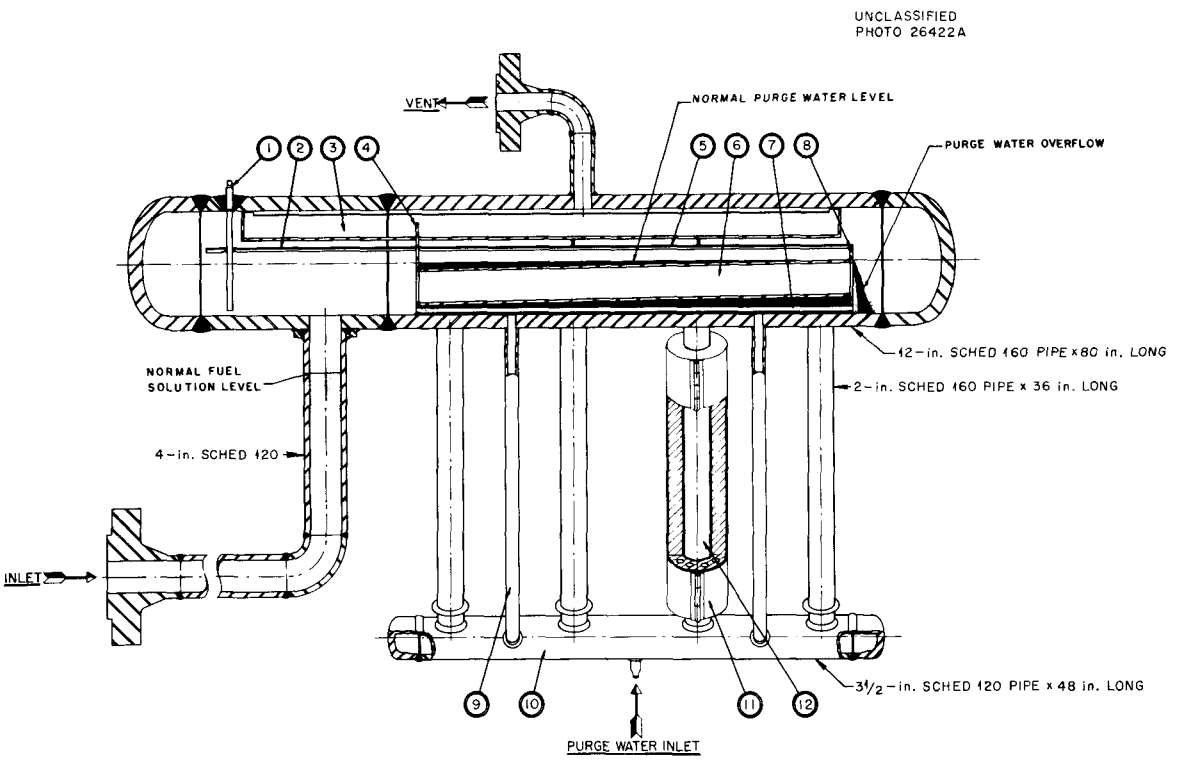

Fig. 3.20. HRT Pressurizer.

connecting pipe at a value considerably less than that in the main circulating stream. The internal construction of the pressurizer drum provides a constant purge-water storage capacity that is sufficient to permit operation for 1 hr following failure of the purge pump. This time was considered adequate to take remedial action to restore the pump or to prepare for an orderly shutdown. Natural recirculation of the stored water occurs through the two downcomers shown in Fig. 3.20.

The reactor system is instrumented to initiate an automatic dump if the system pressure reaches 2800 psi. If operating conditions are normal and there is no letdown of fluid from the high-pressure system, this pressure will produce an adiabatic compression of the pressurizer steam in the amount of 20 liters.[83] Under these conditions the fuel solution would rise about 3.8 in. into the pressurizer drum or about 1.25 in. below the water storage level, that is, the centerline of the pressurizer drum. Hence, fuel solution is prevented from entering the steam-generator section of the pressurizer in all situations except a most unusual one.

The effects of the modified pressurizer design on reactor safety were examined.[86] Since the modified design appeared to offer less resistance to fluid flow than the previous design, it was concluded that the earlier safety analysis for a given reactivity change would apply conservatively.

The pressurizer was designed and fabricated according to the rules and procedures of the ASME Code for Unfired Pressure Vessels. The effects of thermal stress in the heater legs were included in the stress analysis.[83,87] A summary of the pressurizer design data is given in Table 3.9.

For operation of the reactor with a D_2O reflector, a bypass was provided on the blanket pressurizer between the distribution header and the pressurizer standpipe; this permits a portion of the blanket circulating stream to be evaporated to provide the overpressure. However, with the necessary instrumentation changes, condensate can be supplied to the steam generator from the blanket low-pressure system in a manner similar to that for the fuel pressurizer.

3.4.6 Pressurizer Auxiliaries

Pressurizer Heaters. – The pressurizer heaters were designed for safety and ease of remote maintenance. Figure 3.21 shows one of the clamshell-type electric heaters, which has eight ¾-kw Calrod heater elements cast in an aluminum matrix to equalize the heat flux over the surface of the heater legs. The choice of aluminum alloy, ASTM B-26 Alloy C-1 (presently designated as Alloy C4A), was based on a melting point which would prevent damage to the stainless steel piping by overheating. Additional pipe-wall protection is provided by an inner liner of steel shim stock and three thermocouples in each heater unit. The thermocouples provide temperature measurements and signals for de-energizing the electrical circuits to the heaters in the event excessive temperatures are indicated. Concentric aluminum cylinders around the outside of the heater units provide thermal insulation.

A number of tests were performed to prove that the aluminum could be melted without damaging the heater piping and to evaluate the heater performance and general utility of the design.[88–90] These tests showed that the stainless steel piping was adequately protected and that the heater performance was satisfactory for the intended service. With the heater operating at 750°F, the heat loss through the clamps, ends, and outside insulation was about 1.5 kw; the net heat input to the pipe was 4.5 kw. Estimated overall heater-to-pipe coefficients were about 110 Btu hr^{-1} ft^{-2} $(°F)^{-1}$; however, to achieve coefficients of this magnitude, the heaters must be clamped tightly around the pipes.[90]

Pressurizer Insulation. – A study of the various means of insulating the pressurizers indicated that several layers of aluminum foil would be the most advantageous method of providing the necessary insulation.[91] This conclusion was based primarily on the impracticality of providing preformed aluminum sheets to fit the intricate pressurizer design.

Table 3.9. Pressurizer Design Data

Design pressure, psi	2500
Installed heater capacity, kw[a]	24
Purge-water flow rate, lb/hr (max)	108
Steady-state vaporization rate, lb/hr	40.5
Volume, liters	
Pressurizer drum	
Metal (inside)	4.8
Water storage	20.9
Void space	74.1
Heaters, downcomers, and lower headers	12.4
Temperature and Heat Fluxes	
Steady state (12.4 kw)	
Heat load, kw	
Feedwater preheating	4.4
Direct heater losses	1.4
Pressurizer heat losses	6.6
Inward heat flux at pipe surface, Btu hr^{-1} ft^{-2}	6,500
Inward heat flux at inside wall, Btu hr^{-1} ft^{-2}	9,200
Temperature distribution	
Bulk fluid, °F	636
Inside wall, °F	649
Outside wall, °F	664
Aluminum heater matrix, °F	835
Overall heat-transfer coefficient, Btu hr^{-1} ft^{-2} $(°F)^{-1}$	33
Maximum theoretical (30.4 kw)[a]	
Inward heat flux at pipe surface, Btu hr^{-1} ft^{-2}	17,900
Inward heat flux at inside wall, Btu hr^{-1} ft^{-2}	25,400
Temperature distribution	
Bulk fluid, °F	636
Inside wall, °F	662
Outside wall, °F	710
Aluminum heater matrix, °F	835
Overall heat-transfer coefficient, Btu hr^{-1} ft^{-2} $(°F)^{-1}$	90

[a]Individual heater elements are rated for 1 kw at an applied voltage of 240 v. At 208 v the heater output is reduced to about $\frac{3}{4}$ kev.

Pressurization Control. – The governing factor in establishing the design criteria for the pressure balancing and control systems was the provision for maintaining the integrity of the core and pressure vessel under varying operating conditions.[92–94] Following a number of studies on the effects of recombination,[95] heat after shutdown,[96,97] pressurizer venting,[98–101] etc., a 2-min delay time was included in the dump circuit instrumentation to permit recombination of radiolytic gases before a dump operation.

To protect the core tank against excessive pressure differentials, the two pressurizers are interconnected for pressure relief through a rupture disk assembly.[94] The design of the assembly (item 120), shown in Fig. 3.22, incorporates two rupture disks into a single vessel, to which entry may be gained by the removal of a single blind flange. The two disks are attached to a holder in

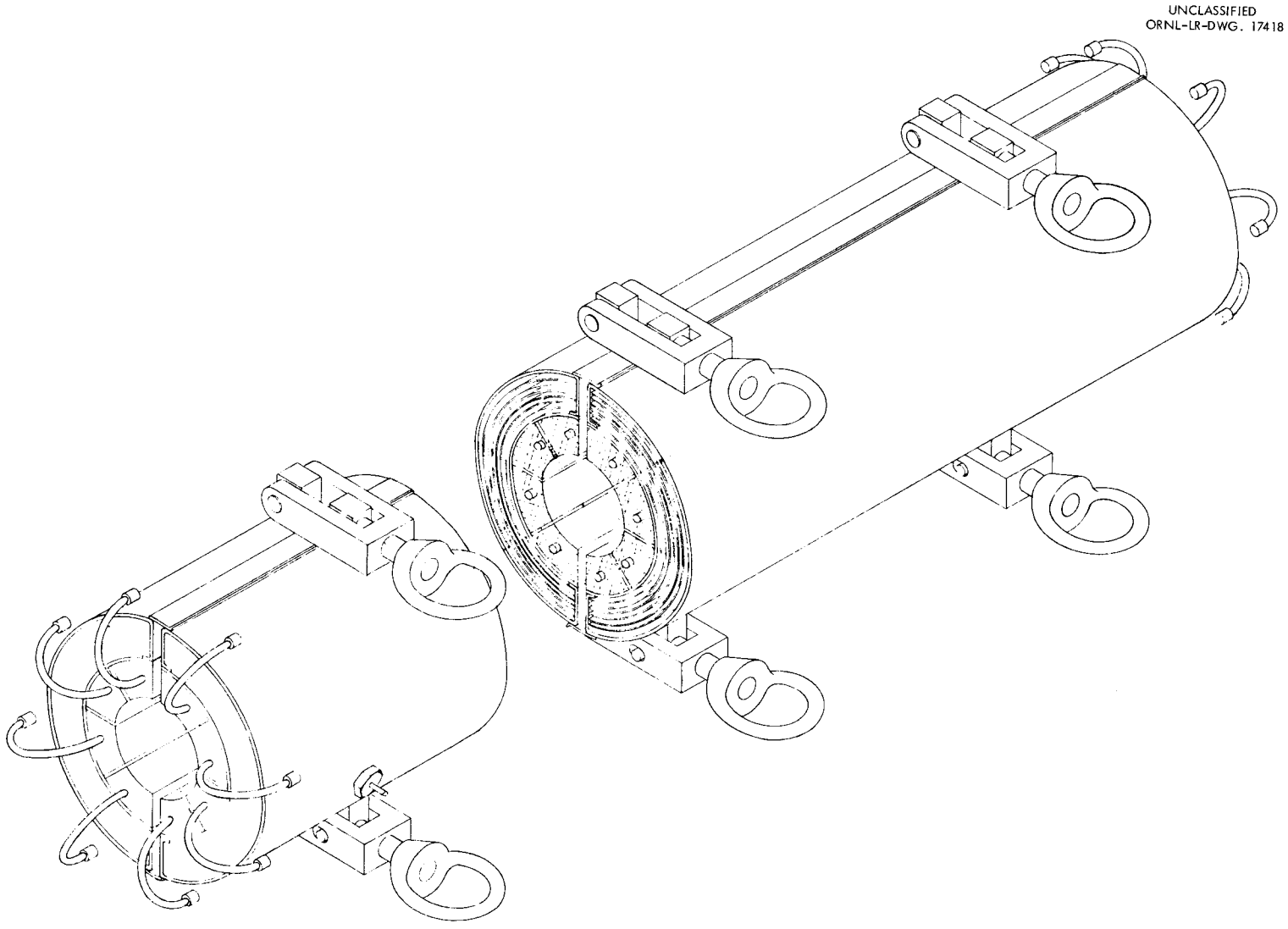

Fig. 3.21. HRT-Pressurizer Heater.

such a manner that protection is obtained regardless of the direction of excess pressure. Pressure supports are provided to prevent failure of the disks by collapsing. As indicated in the figure, the piping inlets of the pressurizer vent are located in the uppermost portion of the separate regions to keep gases purged from the assembly.

Buildup of radiolytic gases in the pressurizers is detected by comparing steam and liquid temperatures as indicated by appropriately located thermocouples. In the event that gases accumulate in the pressurizers, they are vented to the low-pressure systems for recombination.

Pressurizer Level Indicators and Controllers. – A specially designed float-type liquid-level transmitter is provided on the pressurizer steam generator in order to keep the reactor operator informed as to the volume of water in storage.

A second transmitter, with a controller (float), is provided to maintain the pressurizer level in the standpipe at the point indicated in Fig. 3.20. The pressurizer level is maintained in the standpipe so that greater sensitivity to level changes can be obtained for small volume changes.

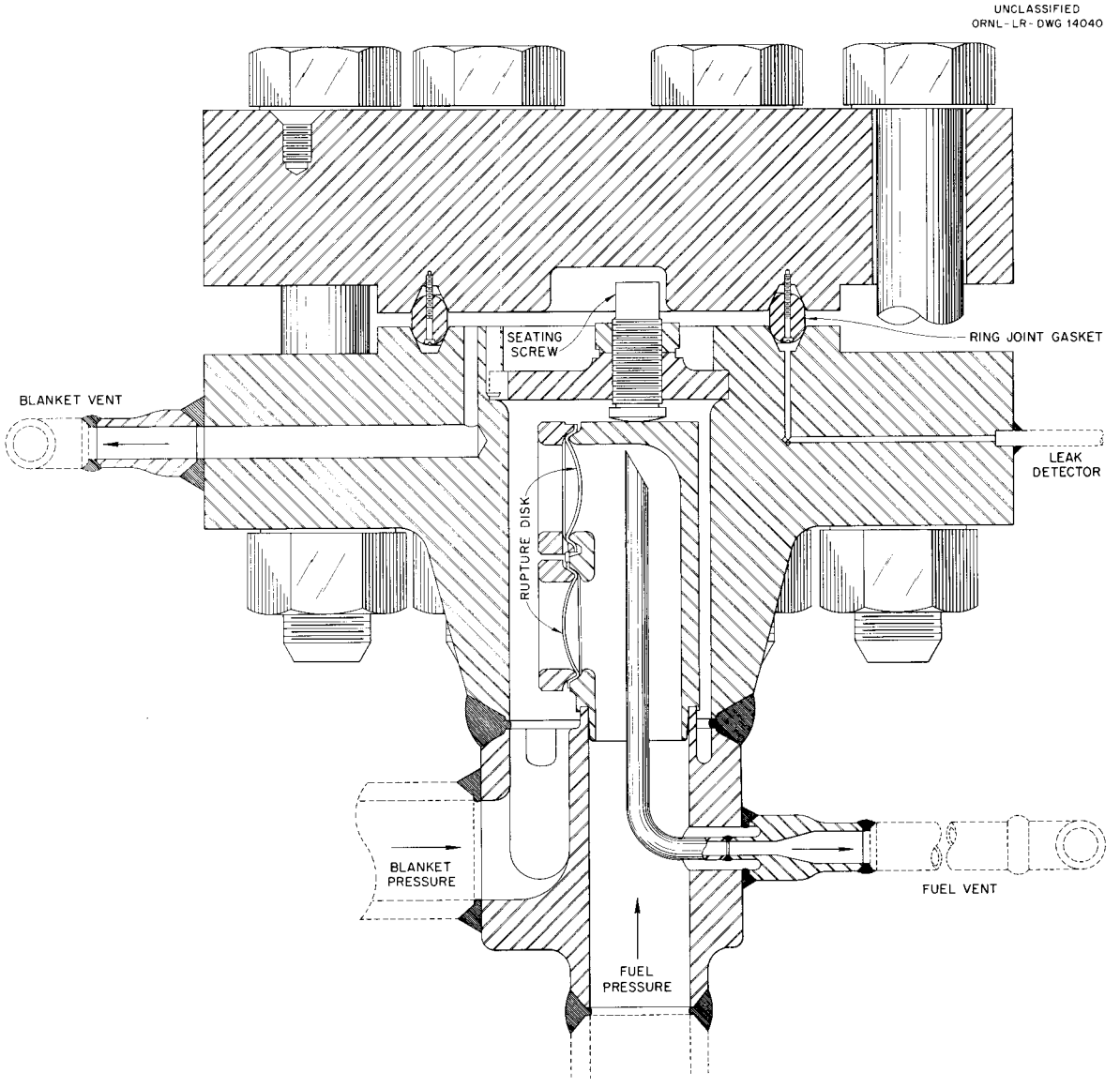

Fig. 3.22. Rupture-Disk Holder for Pressure-Balancing System.

The motion of the fluid level at the float with respect to the standpipe fluid level was analyzed for a variety of conditions in order to size the connecting lines to obtain a good and stable indication of liquid level. The analyzers are discussed in refs 102 and 103.

A similar analysis was performed to determine the effect of periodic gas sampling on the level indicator.[28] It was found that the restriction to flow in the vent line connecting the indicator to the pressurizer was insignificant.

3.5 FUEL AND BLANKET PRIMARY HEAT EXCHANGERS

3.5.1 General Description

The primary heat exchangers provide heat transfer surface to remove the energy released in the reactor core and blanket. The heat is used to generate steam on the shell side of the horizontal, reboiler-type, U-tube heat exchangers. The heat exchangers also function as system heaters during reactor start-up by circulating the fuel and blanket solutions through the exchangers while condensing steam (supplied by an auxiliary system) on the shell side. Identical units are provided for the fuel system (item 4) and blanket system (item 31). An artist's concept of the steam generator is shown in Fig. 3.23. Each unit is provided with a blast shield (item 105) to prevent damage to the reactor biological shield and containment vessel in the event of a brittle-type failure.

Long-term maintenance-free operation of large heat exchangers (50- to 500-Mw class) is directly related to the development of adequate production and inspection techniques for tubing and of methods for joining tubes to tubesheets. In addition to the immediate goal of producing steam generators for use in HRE-2, these long-term goals were included in the heat exchanger program and were based on careful inspection of tubing, careful welding and inspection of tube-to-tubesheet joints, and extensive thermal cycle tests.

Final design, tube-to-tubesheet welding development, and fabrication of the primary heat exchangers were performed by the Foster Wheeler Corporation according to ORNL Specification HRT-1004a.[6] Table 3.10 lists the material specifications for the various parts of the exchanger. Design and fabrication were specified to be equal to or better than that required by the ASME Boiler and Pressure Vessel Code for Unfired Pressure Vessels. Allowable-stress values equal

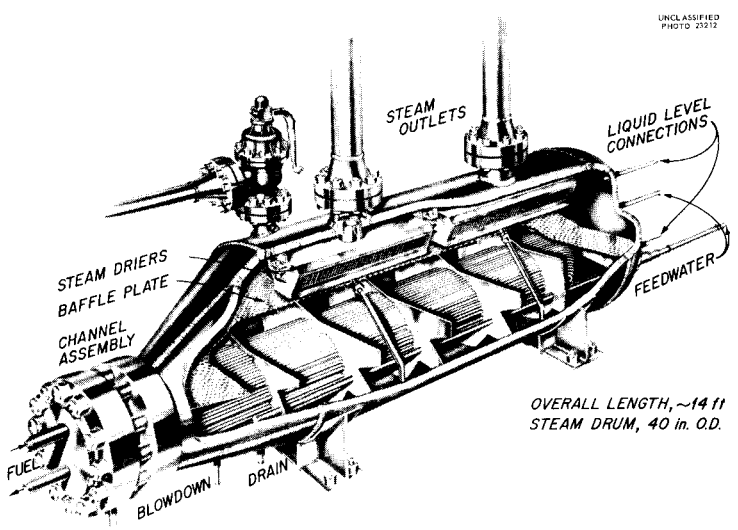

Fig. 3.23. HRT 5-Mw Steam Generator.

Table 3.10 Material Specifications for Primary Heat Exchangers[a]

Item	Material Specification
Tubes	ORNL HRP-210 (type 347 stainless steel)
Tubesheet and channel cover flange	ORNL HRP-260 (type 347 stainless steel cladding on ASTM A-105, grade II)
Header nozzles	ORNL HRP-230 (type 347 stainless steel)
Gasket	ASTM A 240-49, grade S (type 304 stainless steel, fully annealed by air-cooling from 1900 to 2000°F)
Shell	ASTM A212-52aT, grade B
Flange stud bolts and ferrules	ASTM A193-52T, grade B-7
Flange stud bolt nuts	ASTM A194-51, grade 2-H

[a]ORNL specifications are available in ref 6.

to four-fifths of Code values were specified. The exchangers were inspected and stamped as conforming to the Code. However, design and inspection requirements that were considerably more stringent than those specified by the Code were imposed on the construction of the exchangers.

Fabrication details and techniques, material histories, test procedures and reports, etc., were compiled and reported.[104] A comprehensive report on the welding development of tube-to-tubesheet joints was issued.[105]

For the fuel-system heat exchanger (item 4) operating at design conditions, fuel solution enters the upper portion of the divided channel assembly at 572°F (300°C) and 2000 psi and is circulated at a velocity of about 11 fps (400 gpm flow rate) through 251 U-tubes spaced on a $\frac{5}{8}$-in. triangular pitch. The outside area of the $\frac{3}{8}$-in.-OD, 0.065-in.-thick tubes is 480 ft^2. The solution exits from the divided header box at 494°F (256°C). Heat is transferred from the fuel solution at a rate of 5000 kw (1.71×10^7 Btu/hr) to produce steam at 520 psia and 471°F (saturated) at a rate of 1.62×10^4 lb/hr.

The moisture content of the exit steam is reduced to less than 1% by two 36-in. chevron-type steam driers located inside the shell. Entrained liquid collected in the driers is returned through internal drain lines, which terminate below the water level in the shell. Baffle plates are provided across the water surface (shown in Fig. 3.23) to permit satisfactory short-term operation at power levels up to 10 Mw. However, the steam quality is expected to be less than 99% at these higher steaming rates.

A 4-in. nozzle is provided for the exit steam from each of the steam driers. A common 6-in. sched-80 steam line is connected to the two steam nozzles so that the steam velocity will be less than 4000 fpm at the maximum steaming rate. Feedwater enters the shell at 180°F through two distributor pipes located at the same level as the center line of the tube bundle. The distributor pipes have holes drilled on the top for uniform distribution of the feedwater. The water level is maintained about 3 in. above the tube bundle. A blowdown line, which originates inside the shell as a horizontal pipe along the bottom of the unit, provides for periodic blowdown and sampling.

The steam space of the heat exchanger shell is equipped with a safety relief valve set at 1500 psi. A rupture disk of the same rating precedes the relief valve to prevent leakage through the valve at pressures below the set point. The blowdown line contains another relief valve preceded by a rupture disk; these are set to relieve at 1350 psi (150 psi lower than the steam side set

point) so that rapid pressure relief is obtained by ejection of liquid from the heat exchanger shell. Release of water from the heat exchanger would cause the reactor power to decrease; release of steam would cause the power to rise.

A differential pressure cell is used to measure the liquid level in the heat exchanger. The pressure connections are indicated on the end of the exchanger in Fig. 3.23.

The blanket primary heat exchanger (item 31) was made identical to the fuel-system primary heat exchanger (item 4) for economic reasons, although the service conditions would not require an exchanger of equal capacity. Because of the low steaming rate, one of the two 4-in. steam nozzles was blanked off on the blanket heat exchanger.

For a D_2O-reflected core that operates at a power level of 5 Mw, about 220 kw (7.5×10^5 Btu/hr) of heat is produced in the blanket region. To remove this heat, D_2O is circulated through the heat exchanger at a rate of 230 gpm. Inlet- and outlet-design temperatures are 540°F (282°C) and 532°F (278°C) respectively. Under these conditions, steam at about 900 psia and 532°F (saturated) is produced at a rate of 735 lb/hr.

3.5.2 Design Bases

Type 347 stainless steel was selected for surfaces in contact with process solution because its corrosion resistance is adequate and because heat treatment would not be required after welding to retain good corrosion resistance in the weld area. The diameter of the heat exchanger tubes, each $\frac{3}{8}$ in. OD, was selected on the basis of fuel holdup, number of tube-to-tubesheet joints, fabrication difficulties, and applicability to larger-sized heat exchangers. The thickness of the seamless tubes, 0.065-in. (No. 16 BWG), was determined by the appropriate rules of the Unfired Pressure Vessel Code for a design pressure of 2000 psi, an allowable stress of 15,000 psi, and a tube side corrosion allowance of 0.030 in.[106]

A method was developed for calculating the required heat transfer area of a heat exchanger in which there is a substantial variation in the overall heat transfer coefficient with temperature and position.[106] Calculations for the fuel heat exchanger were based on a 5000-kw heat load (1.71×10^7 Btu/hr), a fuel flow rate of 400 gpm (179,000 lb/hr), and a fuel concentration of 10 g of U per liter of solution.[107] The overall heat transfer coefficient for fouled tubes was assumed to be 75% of that for clean tubes. Figure 3.24 shows the required surface area as a function of tube side velocity. Tube side holdup, important for fuel inventory purposes, is shown in Fig. 3.25. Tube side pressure drop, exclusive of header inlet and exit losses, is shown in Fig. 3.26. The required length and number of $\frac{3}{8}$-in.-OD by 16-BWG tubes are shown in Fig. 3.27. A design point of 11 fps, indicated in each of the figures, was selected for the tube side velocity on the basis of some concurrent long-range studies which indicated that velocity to be about the optimum in a large heat exchanger. Table 3.11 presents the final design data of the fuel-system heat exchanger.

As pointed out, it was decided for economic reasons to make the blanket heat exchanger identical to the fuel heat exchanger. An investigation of the performance of the heat exchanger in the blanket system using a solution containing 300 g per liter of uranyl sulfate (see Sec 1.2) was made for a blanket power level of 1650 kw.[108] Assuming 230 gpm flow and inlet and outlet temperatures of 527°F (275°C) and 482°F (250°C) respectively, it was estimated that 5360 lb/hr of saturated steam at 540 psia (475°F) would be produced. The velocity in the tubes would be about 6.4 fps; the pressure drop across the tubes would be 8.7 psi. To generate steam at 520 psia (the same as in the fuel heat exchanger) only 380 ft^2 of heat transfer area would be needed (100 ft^2 less than that in the exchanger, as built).

Assuming a constant core outlet temperature, Fig. 3.28 shows the variation of steam pressure and flow rate with core power level. Figure 3.29 shows the same variables as a function of blanket power level, assuming the blanket fluid is a uranyl sulfate solution of 300 g/liter concentration.[109]

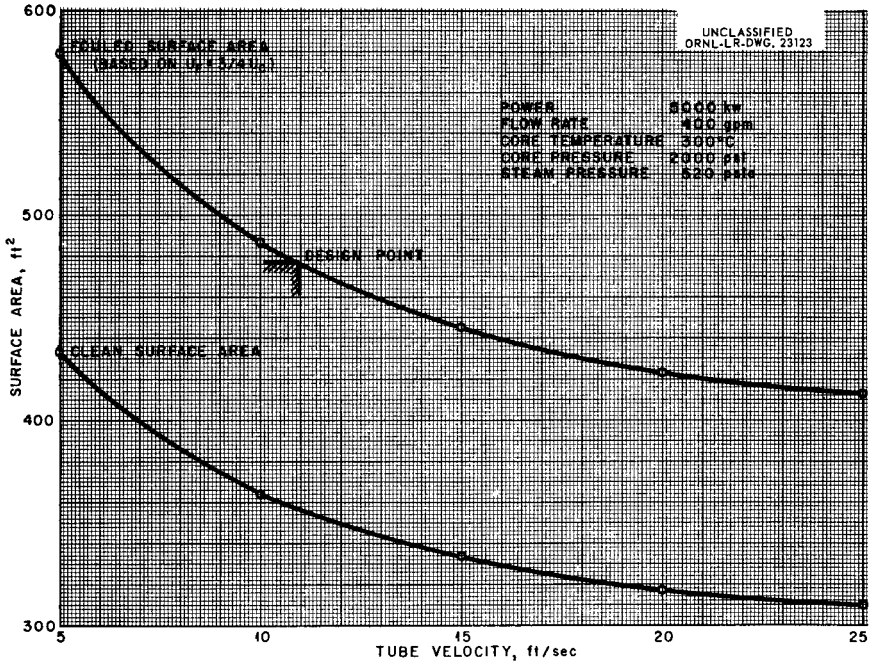

Fig. 3.24. HRT Main Heat Exchanger – Surface Area.

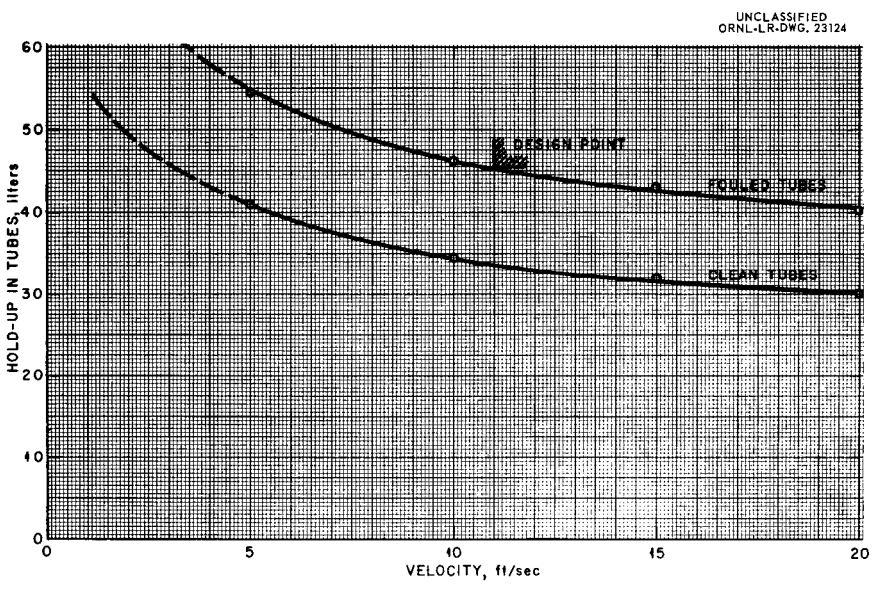

Fig. 3.25. HRT Main Heat Exchanger – Holdup in Tubes.

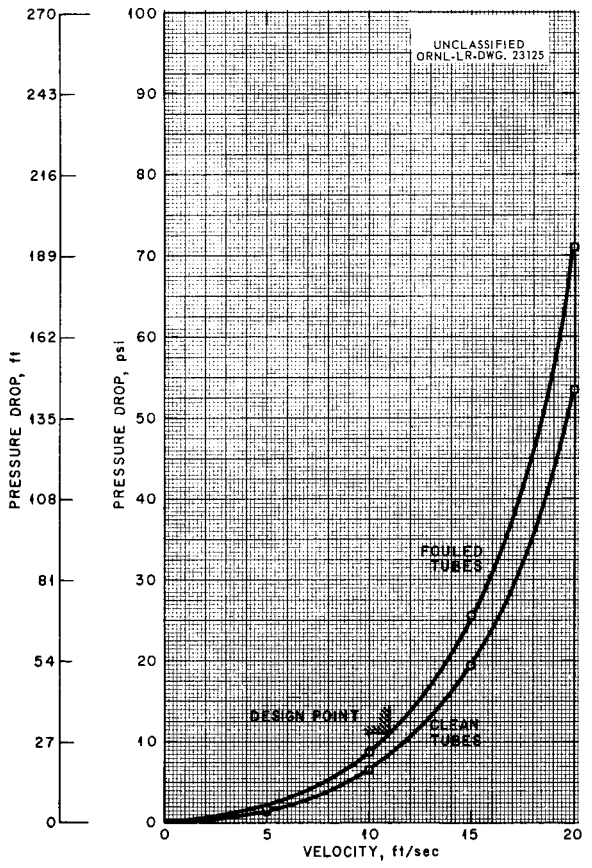

Fig. 3.26. HRT Main Heat Exchanger – Pressure Drop Through Tubes.

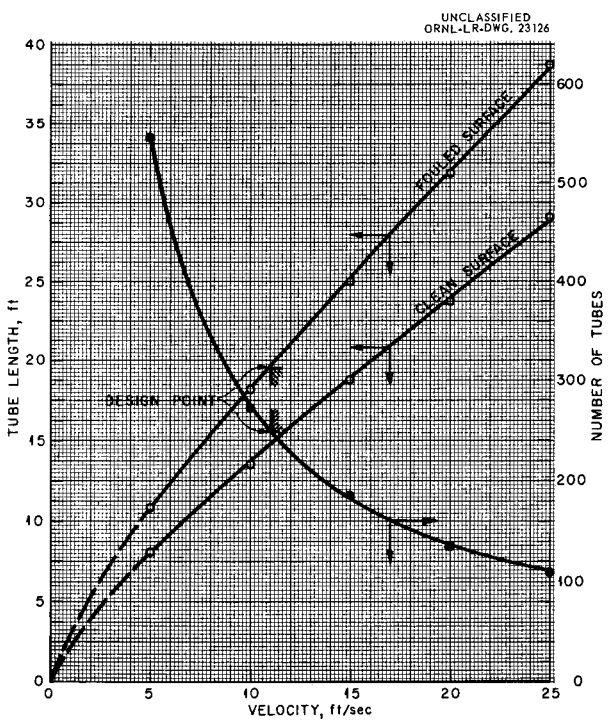

Fig. 3.27. HRT Main Heat Exchanger – Number and Length of Tubes.

Table 3.11. Design Data for the Fuel-System Primary Heat Exchanger

	Tube Side		Shell Side	
Fluid circulated	10 g per liter of fuel solution		Steam and distilled water	
Circulation rate, lb/hr	1.79×10^5		1.62×10^4	
	Solution at $T_{av} = 533°F$	Saturated Steam at 520 psia	H_2O at 471°F	H_2O at 180°F
Fluid properties				
Density, lb/ft^3	53.4	1.12	50.2	60.7
Viscosity, $lb\ hr^{-1}\ ft^{-1}$	0.27		0.28	0.85
Specific heat, $Btu\ lb^{-1}\ (°F)^{-1}$	1.23		1.11	1.00
Thermal conductivity, $Btu\ hr^{-1}\ ft^{-1}\ (°F)^{-1}$	0.34		0.36	0.39
Temperature in, °F	572		180	
Temperature out, °F	494		471	
Operating pressure, psia	2000		520	
Design temperature, °F	600		600	
Design pressure, psi	2000		1250	
Test pressure, psi	4000		2500	
Corrosion allowance, in.	0.030		0.062	
Velocity, fps	11		67 (outlet pipe)	
Pressure drop, psi	18.5			
Holdup volume, gal	14.8		335 (normal level)	
Heat exchanged, Btu/hr	1.71×10^7 (5000 kw)			
Apparent U_F, $Btu\ hr^{-1}\ ft^{-2}\ (°F)^{-1}$	670 ($U_F = \frac{3}{4} U_c$)			
LMTD, °F	53.2			
Area, ft^2 (outside surface)	480 ($A_F = \frac{4}{3} A_c$)			
Tube data				
Number of U-tubes	251			
Outside diameter, in.	0.375			
Thickness, in.	0.065 (No. 16 BWG)			
Average length, ft	Approximately 21			

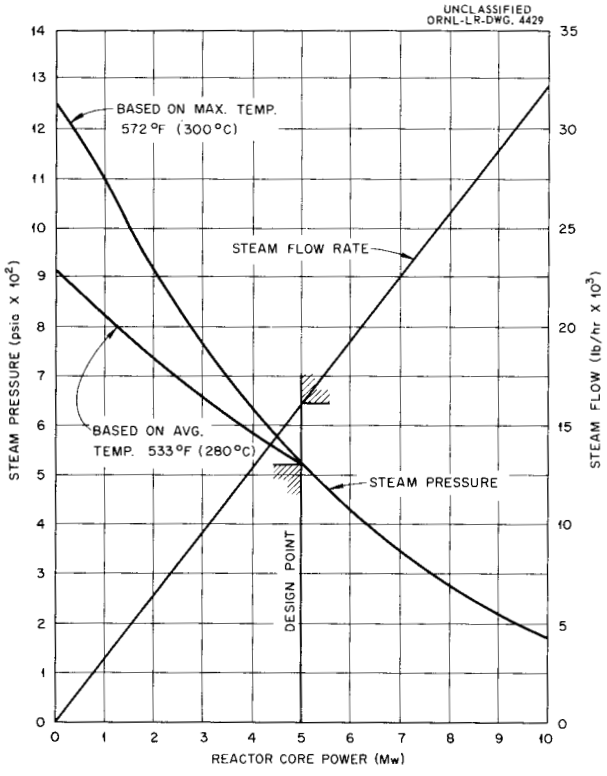

Fig. 3.28. HRT – Reactor Power (Core) vs Steam Pressure and Flow Rate.

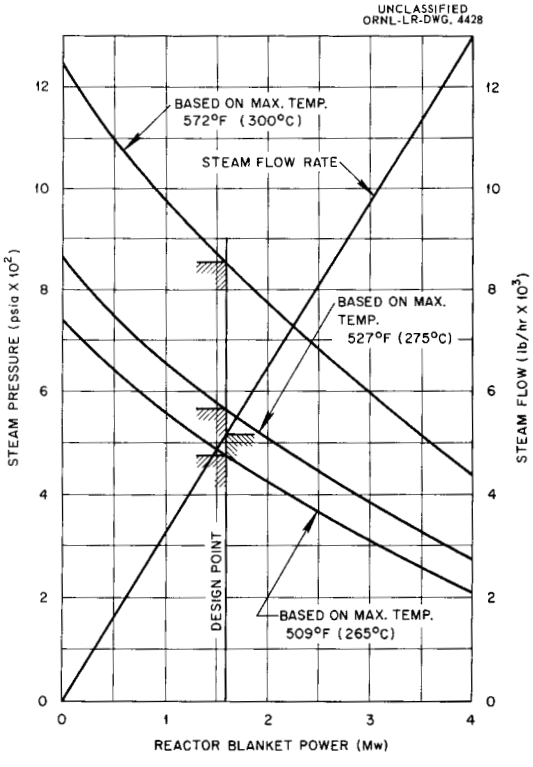

Fig. 3.29. HRT – Reactor Power (Blanket) vs Steam Pressure and Flow Rate.

3.5.3 Tubesheet and Header Design

Perhaps the most difficult problem encountered in the design and fabrication of the heat exchangers concerned the tubesheet and head closure. Figure 3.30 shows a cross-sectional view of the upper portion of the head assembly. Carbon-steel forgings clad with stainless steel were specified for the tubesheet and closure flange (see Table 3.10). The cladding on the cover flange was made sufficiently thick to permit machining of the header chamber and pass partition. Inlet and outlet nozzles were welded to the clad surface as shown in the figure.

A tongue-and-groove gasket design, with a flat, fully annealed stainless steel gasket, provides the primary seal for the head closure. A seal weld backs up the gasketed joint; and the region between the two seals is monitored for leakage across the gasketed joint by a special leak detection system.[110] The seal weld is designed so that the weld can be cut out and rewelded at least three times. Adequate flexibility of the Sarlund lips of the seal weld was demonstrated by a mockup of the joint.

After performing the first in a series of thermal cycle tests on the exchanger, it was discovered that the tongue of the pass partition had undergone severe deformation.[104] The deformation was attributed to severe thermal gradients during the cyclic tests and to the lack of adequate flexibility in the bolted closure. Originally, the closure was provided with bolts as shown in Fig. 3.23. As a result of the tongue deformation, the flexibility of the bolted assembly was increased by the use of longer bolts and ferrules. In this manner the effective bolt length was tripled, and adequate flexibility was demonstrated by subsequent thermal cycling of the assembly. The bolts and ferrules extend to the right of the blanket heat-exchanger head in Fig. 3.31.

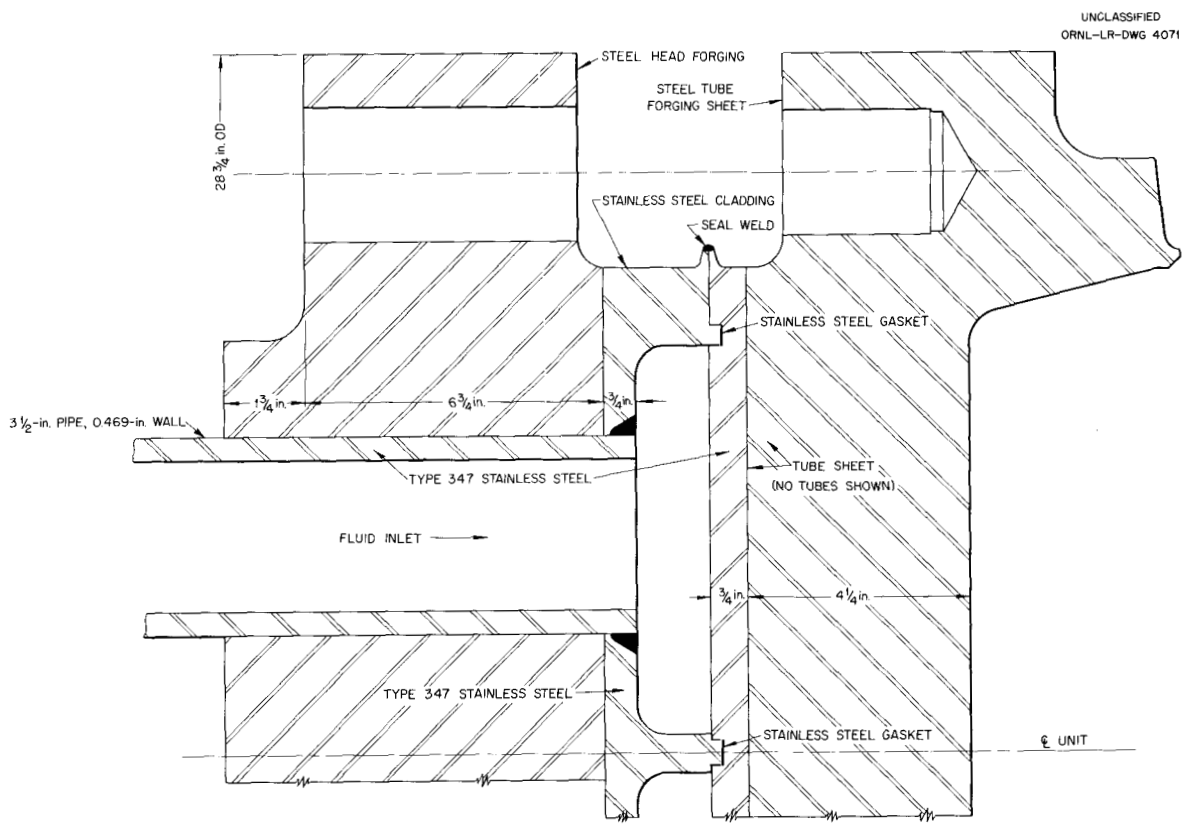

Fig. 3.30. Heat-Exchanger Head Joint.

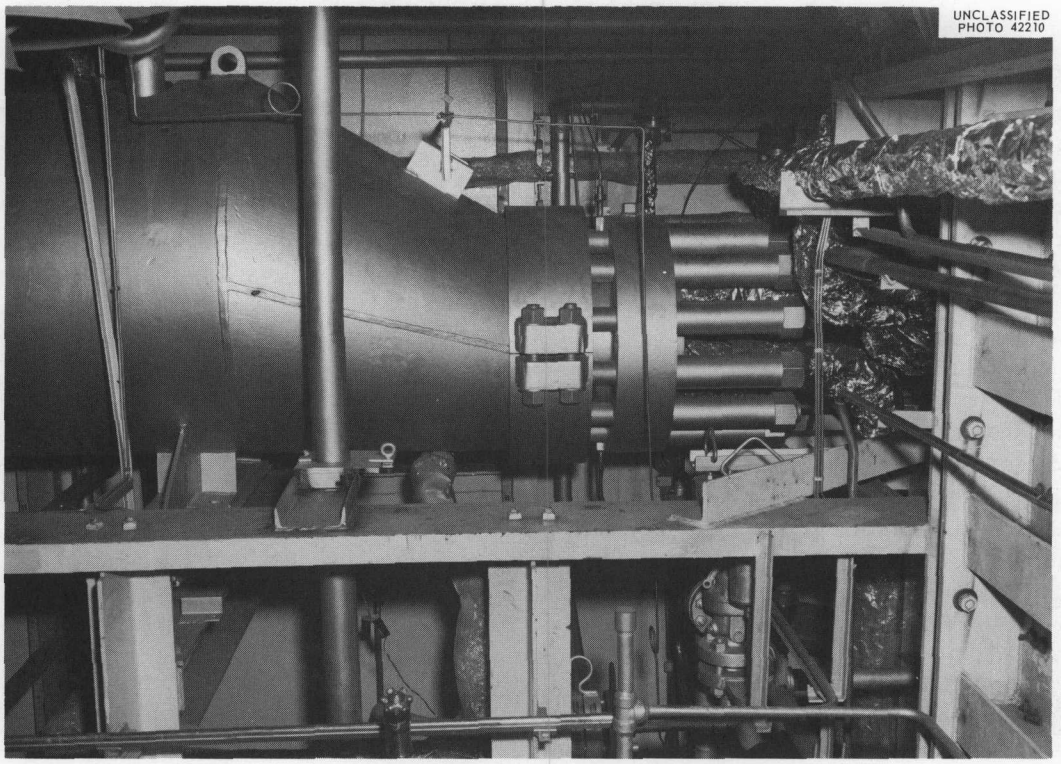

Fig. 3.31. Blanket Heat Exchanger as Installed in Reactor System.

If deformation of the pass partition tongue were to occur during reactor operation, a leakage path would develop across the pass partition seal. The leakage path would continue to increase as a result of corrosion and/or erosion by the high velocity of the bypassing fuel solution. The amount of solution that bypasses the tubes of the exchanger would increase to some undetermined value, resulting in an undesirable loss in heat removal capacity. A mock-up of the pass partition was built and tested to determine the velocity of the bypass stream as a function pass partition separation.[111] Velocities of about 35 fps were indicated for pass partition separations of 0.006 to 0.010 in.

To alleviate the possibility of excessive bypassing in the heat exchangers, a thin, triangular strip of gold was installed on the high-pressure side of the pass partition. The gold strip was molded to fit the contour of the pass partition at the intersection of the tongue and the main body of the channel divider. Gold rivets, inserted in shallow holes drilled into the body of the divider, were used to attach the molded strip. One of the heat exchangers was fitted with the gold strip; the closure was then assembled to determine the deformation of the strip by the bolting action. Upon disassembly of the closure, the appearance of the gold strip was judged to be satisfactory; and the closure was reassembled and seal welded. The other heat exchanger was fitted with a similar gold strip before final assembly of the closure.

The thickness of the tubesheet, shown in Fig. 3.30 as $4\frac{1}{4}$ in. plus $\frac{3}{4}$ in. cladding, was determined by the appropriate rules of the 1952 edition of the Tubular Exchanger Manufacturers Association Mechanical Standards. The cladding thickness was selected to give adequate material for machining details. As shown in Fig. 3.30, the tubesheet is an integral part of the

closure flange of the heat exchanger. A triangular spacing of $\frac{5}{8}$ in. was specified for the 251 U-tubes, each $\frac{3}{8}$ in. OD and 0.065 in. thick.

Since it would be very difficult to repair tube joints after the heat exchangers become contaminated with radioactive materials, considerable effort was devoted to the production of reliable tube joints. The tubes were rolled from 0.001 to 0.002 in. beyond contact throughout the thickness of the tubesheet before welding.[112] This very light roll provides support, yet permits the final helium leak test to be a test of the tube joint weld integrity and not that of the rolled joint. This was demonstrated by pressurizing the shell side of the rolled joints with Freon at 10 psi and checking the opposite side of the tubesheet for leakage with a halogen leak detector; all the rolled joints indicated leakage.

An extensive program was undertaken to develop a tube-to-tubesheet welding procedure.[105] The procedure involves the use of an inert-gas-shielded, tungsten-arc torch mounted on a rotating jig as shown in Fig. 3.32. A copper pilot, inserted into the end of the tube to center the torch, facilitates heat removal from the tube wall. Rotation of the torch is manually controlled and consists of 1.1 revolutions per weld pass.

A J-type joint preparation was machined in the tubesheet prior to insertion of the tubes. The welds were made in two passes, using preplaced welding wire formed into rings. Figures 3.33 and 3.34 show tube joint details and sample welds. Quality-control welds were made periodically during the tube joint welding and were subsequently examined by radiographic and metallographic methods. Details of the extensive tube joint inspection procedures are available.[104]

3.5.4 Thermal Cycle Tests

To demonstrate the adequacy of the heat exchanger design and, in particular, the tube-to-tubesheet welds and the closure joint to withstand thermal shock, cyclic temperature tests were performed on both units. Specified temperature changes were more severe than those likely to be encountered in reactor operation.

The following test procedure was specified in ORNL Specification HRT-1004a:[6]

1. The completed unit shall be subjected to a hydrostatic test of 4000 psig on the tube side, with the shell side vented to atmosphere. Following this test, the shell side shall be subjected to a hydrostatic test of 2500 psig, with the tube side vented to atmosphere.
2. After successful completion of the hydrostatic tests, the tube side of the heat exchanger shall be temperature cycled by circulating Dowtherm A through the tubes at a total flow rate of not less than 40 gpm. The temperature of the Dowtherm A shall be cycled between 212 and 582°F, requiring one-half hour to complete each temperature cycle. Fifty such temperature cycles are required.
3. After final cleaning of the unit, a helium mass spectrometer leak test shall be performed. For this purpose both primary and secondary sides shall be evacuated, the shell side to less than 30 μ absolute pressure. The vacuum on the primary side shall be broken by introducing helium so that the primary side rises to a pressure dependent on the initial secondary side vacuum in accordance with the following table:

Secondary Side Absolute Pressure (μ)	Primary Side Helium Pressure (psia)
1	15
10	150
20	300
30	450

Helium leakage from the primary side to the secondary side, as measured by a mass spectrometer, shall be not greater than 0.01 cc (STP) of helium per day. Leaks shall be repaired and the unit retested until no leakage is detected.

The precautions taken to produce reliable tube joint welds were apparently justified by the results of the thermal shock tests. Of the 1004 tube joint welds in the two heat exchangers, only six joints (two in one exchanger, four in the other) indicated leakage on the helium leak test following the 50 thermal cycles. The leaking tube joint welds were repaired according to a previously developed procedure,[105] and each unit was subjected to an additional test of 10 thermal cycles between the same temperature limits but of somewhat longer duration. The units were retested, using a helium leak detector as before. No tube joint leaks were found in the unit which developed the two leaks during the first thermal shock test; four tube joint leaks were found in the other unit. These were repaired, and the unit was subjected to another test of 10 thermal cycles. After this shock test, no tube joint leaks were found. Thus, as a result of the thermal shock tests, 1% of the 1004 tube joint welds showed leakage, indicated by a mass spectrometer leak detector.

Partial decomposition of the Dowtherm in the gas-fired test loop furnace left extensive carbon deposits in the tubes of the heat exchangers. After the deposits were removed, with considerable difficulty, at the fabricator's plant, the units were shipped to ORNL for further cleaning by flushing with high-temperature oxygenated water and uranyl sulfate solution.[113,114]

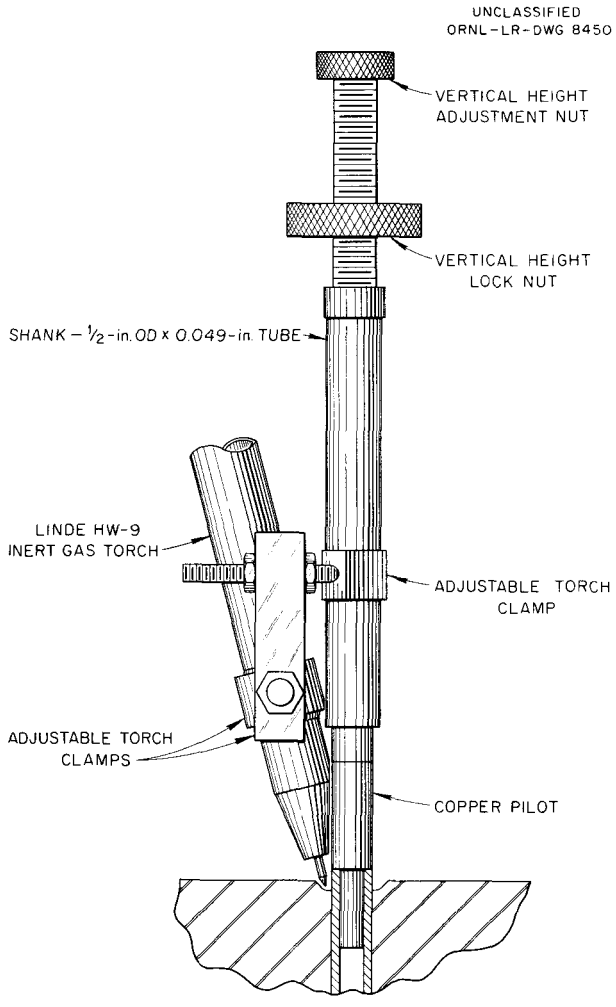

Fig. 3.32. Rotating Heliarc Torch Jig.

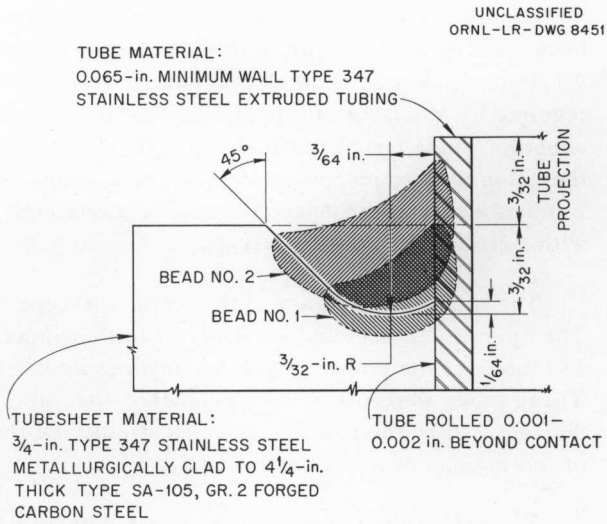

Fig. 3.33. Tube Joint Details.

BEAD NO.	TUNGSTEN DIA (in.)	ARGON (cfh)	AMPS	VOLTS	WIRE DIA (in.)	FERRITE (%)
1	1/16	15	72–75	10–12	1/16	12–14
2	1/16	15	82–85	10–12	3/32	5–6

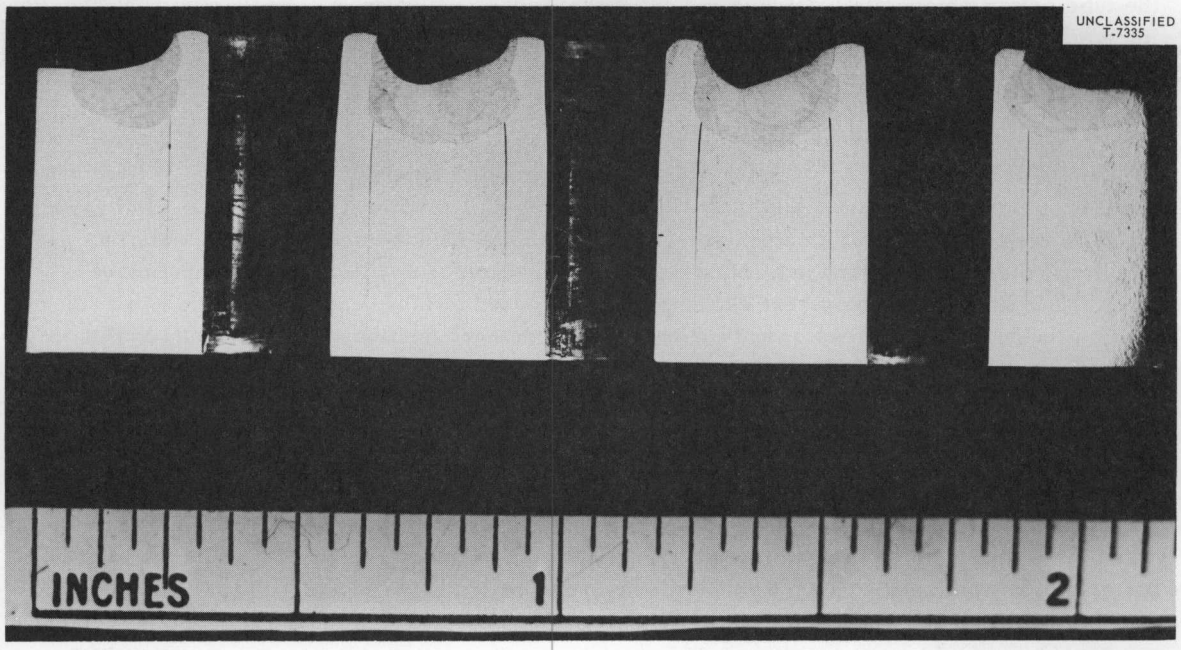

Fig. 3.34. Sample Tube-Joint Welds.

3.5.5 Inspection of Heat-Exchanger Tubing

Considerable attention was devoted to obtaining tubing of the highest quality for use in the heat exchangers.[115] The $\frac{3}{8}$-in.-OD by 0.065-in.-thick wall tubing was redrawn from 1.0-in.-OD by 0.120-in.-thick redraw stock purchased according to ORNL Specification HRP-210a.[6] Although not required by the material specifications, the redraw stock was tested by an ultrasonic (Reflectorscope), "angle-beam" method. Only 145 of the 240 rounds purchased were passed by this test; the balance were judged unacceptable. It should be emphasized that this test was nonstandard, was not a part of the material specifications, and had not been shown to have a high correlation with material behavior in service.

The rounds which passed the Reflectorscope test were accepted for redrawing to final size. The operation proceeded smoothly, a further indication of good quality redraw stock. A total of 534 tubes of the proper length for bending into U-tubes were made available from the redraw stock. These tubes were tested by a magnetic analysis (eddy current) method, another nonstandard test not required by the material specifications. Of the 534 tubes tested, 16 (3%) were rejected because of indications of questionable quality.

To explore the minimum size defect detectable by magnetic analysis, a sound piece of tubing with an inside-surface notch and a similar outside-surface notch with depths machined to approximately 3% (0.002 in.) of the wall thickness was examined. Both of these manufactured defects were readily detected. From the tubes rejected by the magnetic analysis technique, the two which appeared to be of the most questionable quality were subjected to radiographic and metallographic examination. Flaw indications pinpointed by magnetic analysis were readily confirmed by radiographs and metallography. It was concluded that failures would have resulted from some of the flaws if those tubes had been put into the intended service.[116] Also the defects were produced in the tube redrawing operations, which indicates that inspection at an intermediate point in the drawing process is not a satisfactory substitute for inspection of the final product.[117]

3.5.6 Heat-Exchanger Blast Shield

A brittle-type failure of a carbon steel pressure vessel must be considered as a distinct possibility if the vessel is exposed to fast-neutron irradiation for a sufficiently long period of time.[44,65] Since the primary heat exchangers are exposed to fast-neutron irradiation, a result of neutron leakage from the reactor and the emission of delayed neutrons from the fuel solution in the heat exchanger tubes, a blast or fragmentation shield was specified for each of the steam generators. The fast-neutron flux at the fuel heat exchanger was estimated[118] to be not more than 1.2×10^{10} neutrons cm^{-2} $sec.^{-1}$ The flux contribution of the delayed neutrons was estimated to be one-fourth of the total flux. It was concluded that, as a result of fast-neutron irradiation, embrittlement of the heat exchanger shell would not become a matter of serious concern in a length of time greatly exceeding the normal life expectancy of the unit. However, it was recognized that other factors, such as thermal shock and stress corrosion, may cause failure; and the blast shields were specified as a precautionary measure.

The blast shield, shown in Fig. 3.35, was fabricated from 1-in.-thick carbon steel (ORNL Specification HRT-1105)[6] by the Nooter Corporation. ASTM A-212, grade A, firebox quality material, produced according to the requirements and practices of Specification ASTM A-300, was specified for the shield. The energy absorption capability of the blast shield was estimated to be about 30×10^6 ft-lb, which is to be compared to the estimated requirements of 3.4×10^6 ft-lb.[118]

UNCLASSIFIED
ORNL-LR-DWG 10319

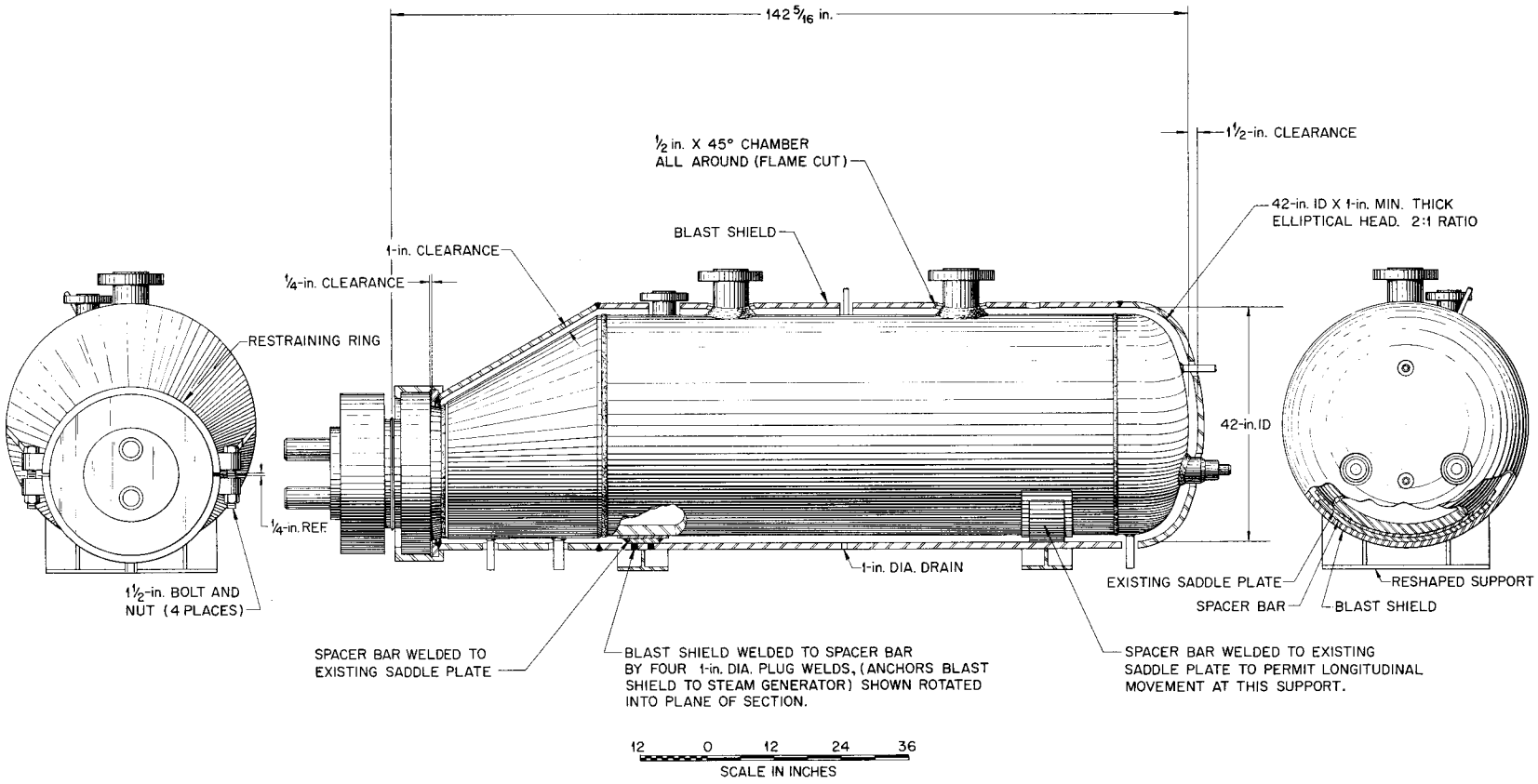

Fig. 3.35. Blast Shield for HRT Steam Generator.

3.5.7 Heat-Exchanger-Related Studies

Dissolved oxygen and acid conditions in boiler systems contribute to the corrosion of the container material. Corrosion can usually be minimized by removal of the dissolved gas and by control of the pH value of the boiler water. Assuming that one molecule of water is decomposed per 300 ev of absorbed gamma energy, the rate of formation of oxygen in the boiler water was estimated[119] to be 0.36 g-moles/hr, corresponding to an oxygen concentration of 1.5 ppm.

A water treatment program, consisting of hydrazine for removal of oxygen and morpholine for pH control, was suggested for the steam system.[120] Further investigations showed that morpholine polymerizes under irradiation to form a tar-like substance and should not be used.[121] Instead, it was recommended that the boil water be controlled at a pH of about 10 by a coordinated phosphate treatment, using an initial phosphate concentration of 60 ppm. A definite concentration was not specified for hydrazine because of the uncertainty of radiation effects.

In an investigation of the effects of rapid heating and cooling of the heat exchangers,[122] it was concluded that serious overstressing of the shell could be caused by temperature gradients of 200 to 300°F across the shell. The admission of relatively cool water to a hot exchanger was considered to be the most serious problem likely to be encountered in operation. An external feedwater heater was investigated as a possible means of alleviating this operational problem.[123] However, the time delay and control of a separate feedwater heater would result in only limited protection to the primary heat exchangers. Instead, a system of control interlocks, actuated by temperature sensing elements, was used.[122]

A nuclear-safety study was made on an analogue computer to evaluate the effects of changing the water temperature on the shell side of the fuel-system heat exchanger.[124] With the reactor initially subcritical and the circulating pump at full speed, venting of the steam side of the heat exchanger could add reactivity to the reactor at an undesirable rate. To limit the reactivity addition rate to 0.005 Δk_e/sec, it was necessary to limit the rate of decrease in steam pressure to

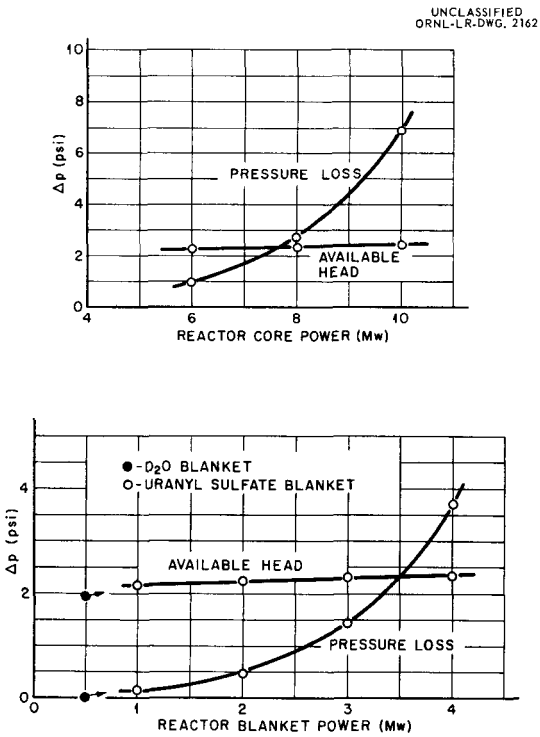

Fig. 3.36. Pressure Losses in Heat Exchanger to Steam Drum Piping and Head Available for Gravity Return of Condensate.

20 psi/sec at all operating pressures, assuming shell side equilibrium and normal operation of the circulating pump.

The pressure loss in the entrainment separator and associated steam piping was investigated to determine wheather a gravity drain would return condensate from the steam drum to the heat exchanger.[125] The results of the study (summarized in Fig. 3.36) indicated that gravity return of the condensate would not be possible for core and blanket power levels in excess of 7.6 and 3.5 Mw respectively. Control valves were installed to permit flashing of the condensate through steam traps to the deaerating feedwater heater at the higher power levels.

3.6 FUEL AND BLANKET CIRCULATING PUMPS

3.6.1 Introduction

Pumps are required in HRE-2 to circulate the fuel and blanket fluids through external heat-removal systems. They are designed to pump corrosive solution at temperatures to 300°C, at pressures to 2000 psi, at flow rates to 400 gpm, and at heads to 100 ft of process fluid. The main criteria for selection of the pumps were absolute leak-tight construction and long maintenance-free operation.

Westinghouse Electric Corporation model 150-C pumps with modified hydraulic designs were purchased for use in HRE-2. At the time, this particular model of pump was under development by Westinghouse for use in water systems aboard nuclear-powered submarines. Several of the modified pumps were purchased and tested extensively in corrosive environments with fuel solution at temperatures of 250 to 300°C. For satisfactory performance in aqueous homogeneous reactor systems, the following weak points in the pump design were found and corrected:

1. excessive heat transfer through the thermal barrier;
2. poor cooling of the lower radial bearing and the thrust bearing;
3. excessive leakage of hot process fluid around the thermal barrier;
4. excessive corrosion on the upper portion of the impeller hub and at the thermal-barrier gasket;
5. excessive mixing of the pumped solution through the shaft labyrinth into the motor.

Details of the extensive development of these pumps for use in aqueous homogeneous reactor systems were reported in the project progress reports (see ref 9 of chap. 1).

3.6.2 Pump Description

The 400-gpm fuel circulating pump (item 5), shown by Fig. 3.37 and designated as a 400A pump, was purchased in accordance with ORNL Specification HRT-1005.[6] The 230-gpm blanket circulating pump (item 28), designated at a 230A pump and identical to the fuel circulating pump except for a lower-output hydraulic end, was purchased in accordance with ORNL Specification HRT-1028.[6] Estimated performance characteristics of the two pumps are shown in Figs. 3.38 and 3.39.

Each pump is designed for vertical operation with the scroll end down and with a vertical suction nozzle and a horizontal discharge nozzle. The ends of the nozzles are beveled so that the connecting pipes may be welded on. An objective of two years of maintenance-free operation was specified for the pump. All parts subject to failure are replaceable. With the coolant system in operation, the pump is capable of continuous operation at any temperature between 70 and 572°F or of standing idle for long periods of time with 572°F solution in the scroll.

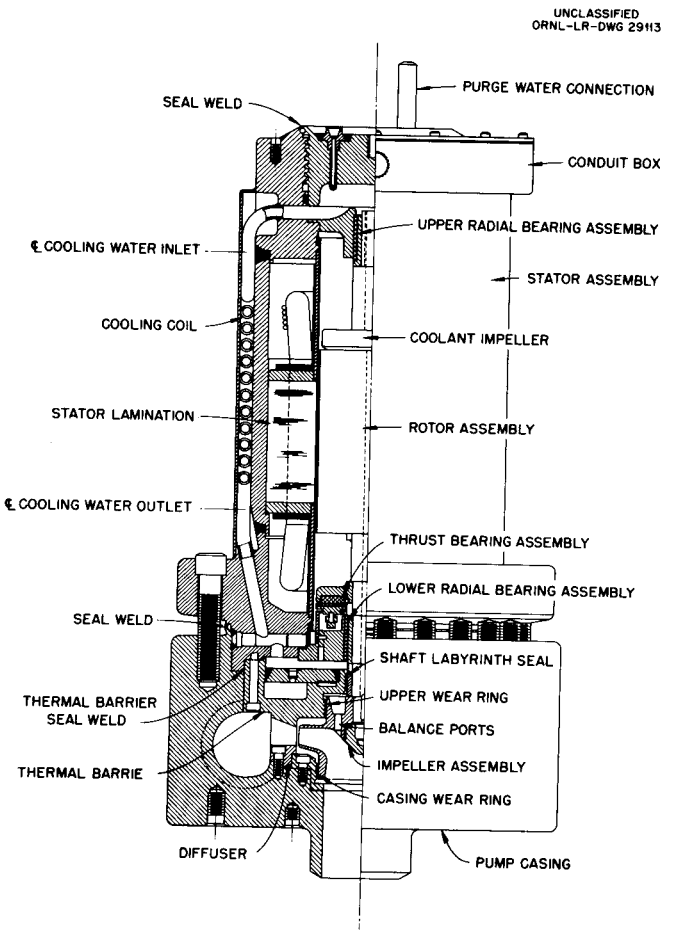

Fig. 3.37. Westinghouse 400A Centrifugal Pump.

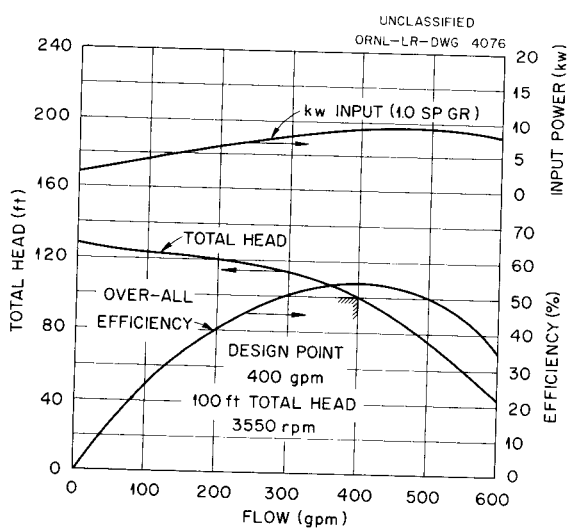

Fig. 3.38. Model 400A Pump Characteristics.

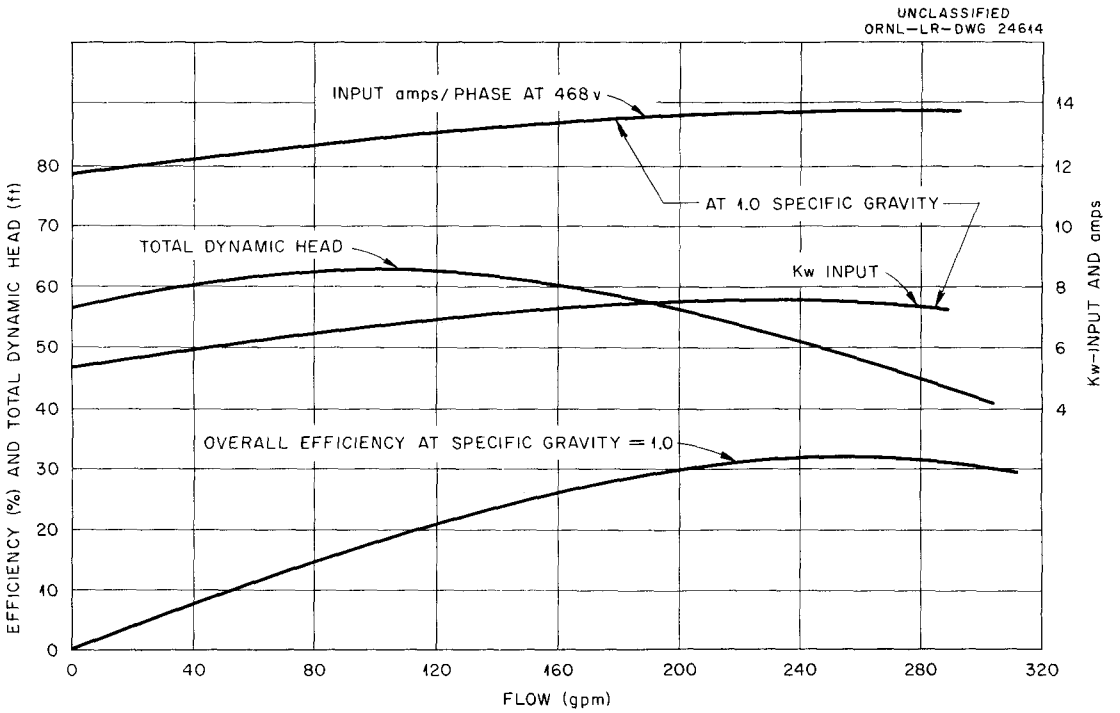

Fig. 3.39. Model 230A Pump Characteristics.

A thermal barrier is used to separate the hydraulic end from the motor section of the vertically mounted pump. By restricting the transfer of heat and radioactive fluid from the pump scroll to the motor section, the thermal barrier minimizes thermal and radiation damage to the bearings and electrical insulation. Sealed air spaces are built into the thermal barrier to increase its resistance to heat transfer. Leakage around the periphery of the barrier, a source of constant trouble in the ORNL development phase of the pumps, is eliminated by a seal weld, as shown in Fig. 3.40. The sealed voids appear in Fig. 3.37.

A labyrinth seal around the shaft is also incorporated in the thermal barrier to reduce the mixing of fuel solution in the motor. Figure 3.40 shows the labyrinth seal and the impeller wear rings to be titanium. In addition to these two parts, the impeller, diffuser, discharge-nozzle liners, casing wear rings, and other small parts in highly turbulent regions were specified to be titanium because of its superior corrosion resistance in the particular environment.

The original HRE-2 fuel and blanket pumps failed because of burning of the titanium hydraulic parts after approximately 4700 hr of operation. The titanium parts were severely damaged during a startup, apparently because oxygen gas at high pressure collected in the pumps briefly and ignited rubbing parts.[126,127] Stainless steel impellers and wear rings were used in the replacement pumps.

Water-lubricated hydrodynamic journal bearings and a pivoted-shoe-type thrust bearing, operating totally submerged in process fluid, are used to take the radial and thrust loads respectively. Distilled water, from the low-pressure system, is supplied to the upper end of the pump through a small gas-vent chamber in series with the purge-water connection indicated in Fig. 3.37. Gas accumulation is prevented, and motor life (particularly the bearings and electrical insulation) is prolonged by a continuous purge of water into the motor cavity.

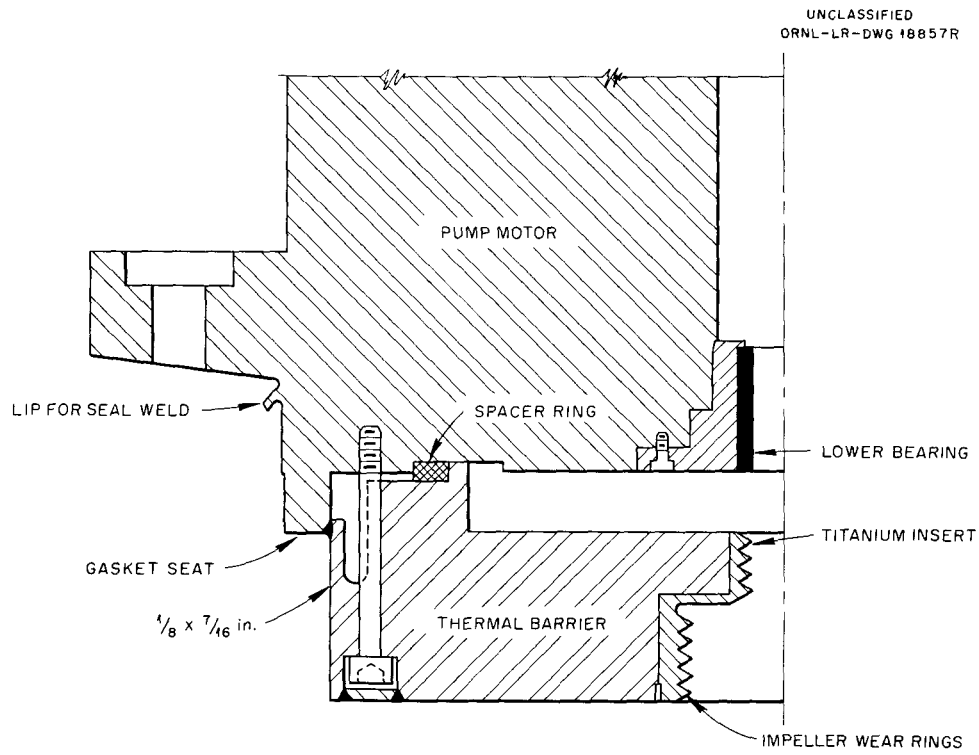

Fig. 3.40. Revised Thermal-Barrier Seal Weld.

The pump has a 15-hp, 440-v, 3-phase, 60-cycle, squirrel-cage induction motor, with the stator and rotor sealed in thin stainless steel cans to prevent the process fluid from coming into contact with stator and rotor windings. The thin cans are supported by the laminations to contain the system pressure of 2000 psi. The motor is totally enclosed in a heavy pressure vessel designed to hold the full system pressure in the event of a can failure. Electrical leads to the motor terminate in a waterproof terminal box. The entire assembly can be submerged under 15 ft of water during reactor maintenance operations.

The motor windings and bearings are cooled by recirculating the motor fluid through a water-cooled heat exchanger (identified in Fig. 3.37 as cooling coil). A small auxiliary impeller, mounted on the upper end of the rotor shaft, recirculates the motor fluid through the coolant circuits.

The upper end plug is screwed into the motor housing and is seal-welded for leak-tightness. The scroll case is flanged to the motor housing and seal-welded. A seal-weld cutter, designed and fabricated by the E. H. Wachs Company, is available for cutting the seal welds prior to disassembly of the pump.

3.6.3 Design Data

Tables 3.12 and 3.13 list the design data for the pumps as supplied with the purchase specifications.[6]

Table 3.12. HRE-2 Fuel Circulating Pump Design Data

Properties of process fluid at 2000 psia	70°F	495°F	572°F
Density, lb/ft^3	69.9	55.8	50.6
Viscosity, $lb\ hr^{-1}\ ft^{-1}$	3.06	0.29	0.24
Heat capacity, $Btu\ lb^{-1}\ (°F)^{-1}$	0.99	1.16	1.33
Thermal conductivity, $Btu\ hr^{-1}\ ft^{-1}\ (°F)^{-1}$	0.35	0.35	0.32
Capacity at 495°F, gpm		400	
Developed head at rated flow, ft of process fluid		100	
Normal operating temperature range, °F		495–572	
Design temperature, °F		600	
Normal discharge pressure, psia		2000	
Design pressure, psi		2000	
Hydrostatic test pressure, psi		4000	
Minimum corrosion allowance, in.			
Stainless steel scroll		0.065	
All other stainless steel parts[a]		0.020	
Titanium parts		0.020	
Suction-nozzle dimensions, in.			
Nominal pipe size		4.0	
Wall thickness		0.500	
Discharge-nozzle dimensions, in.			
Nominal pipe size		3.5	
Wall thickness		0.469	
Maximum operating temperature of rotor cavity, °F		212	
NPSH,[b] ft of process fluid		30	

[a]Except stator and rotor cans.
[b]Minimum net positive suction head at which pump must operate.

3.6.4 Materials

The pump impeller, thermal barrier (or labyrinth inserts), diffuser, shaft or shaft sleeve, impeller nut, wearing rings, discharge sleeve, scroll lining, parts locking titanium to stainless steel, and other parts subjected to process fluid at velocities greater than 15 fps and at temperatures in excess of 212°F were specified to be titanium conforming to ORNL Specifications HRP-251T, -252T, -253T, -254T, or -255T.[6]

All other parts exposed to process fluid at temperatures in excess of 212°F were specified to be titanium conforming to the above specifications, or type 347 stainless steel conforming to ORNL Specifications HRP-210, -230, -240, -270, -280, or -281.[6]

Parts exposed to process-fluid temperatures at or below 212°F were specified to be titanium or type 347 stainless steel conforming to the latest ASTM specifications. Types 304, 316, or 321 stainless steel; Graphitar No. 14; and Stellite Nos. 1, 3, 6, 12, 19, 98M2, and Star "J" were approved for special use where welding was not required.

Table 3.13. HRE-2 Blanket Circulating Pump Design Data

Properties of process solution at 2000 psia	70°F	482°F	510°F
Density, lb/ft^3	100	87	85
Viscosity, lb hr^{-1} ft^{-1}	8.0	0.63	0.59
Heat capacity, Btu lb^{-1} (°F)$^{-1}$	0.70	0.77	0.82
Thermal conductivity, Btu hr^{-1} ft^{-1} (°F)$^{-1}$	0.3	0.3	0.3
Properties of process solvent at 2000 psia	70°F	572°F	
Density, lb/ft^3	69.3	49.7	
Viscosity, lb hr^{-1} ft^{-1}	3.05	0.24	
Heat capacity, Btu lb^{-1} (°F)$^{-1}$	1.00	1.33	
Thermal conductivity, Btu hr^{-1} ft^{-1} (°F)$^{-1}$	0.35	0.32	
Capacity at 482°F, gpm	230		
Developed head at rated flow, ft of process fluid	35–60		
Normal operating temperature range, °F	482–572		
Design temperature, °F	600		
Normal discharge pressure, psia	2000		
Design pressure, psi	2000		
Hydrostatic test pressure, psi	4000		
Minimum corrosion allowance, in.			
Stainless steel above 212 °F	0.065		
Stainless steel below 212 °F	0.020		
Titanium	0.020		
Suction-nozzle dimensions, in.			
Nominal pipe size	3.5		
Wall thickness	0.469		
Discharge-nozzle dimensions, in.			
Nominal pipe size	3.5		
Wall thickness	0.469		
Maximum operating temperature of rotor cavity, °F	212		
NPSH, ft of process fluid (min.)	30		

The use of castings for pressure-containing parts was not permitted. All other parts of the pump, that is, parts not in contact with process fluid, were specified to be the most suitable material for the intended application. Since materials which would give maximum life in temperature and radiations environment were desired, purchaser approval of all material was required. Samples of the materials used in the construction of parts in contact with process fluid were obtained for testing.

In the design calculations for pressure-containing parts, stresses were limited to four-fifths the values permitted by the ASME Boiler and Pressure Vessel Code, Section VIII, 1952 edition.

3.6.5 Pump-Related Design and Development Investigations

A preliminary study was made of the effects of radiation damage to the motor windings, using the Way-Wigner relation for gamma emission from fission products.[128] The effective life of the

pump was conservatively estimated to be about one year of full-power operation, based on radiation-damage data and the estimated gamma flux. It was also estimated that the hydrogen-gas evolution due to radiation damage to the silicone resin in the stator can would cause a pressure buildup sufficient to collapse the can in less than one year.

In order to predict more precisely the gamma dose rate in the stator, the actual dose rate was measured with a distributed source in the pump scroll.[129] A Cs_2SO_4 solution containing 2.2×10^{-5} curie/cm^3 was used in the experiment, and dose rates were determined from radiation-sensitive photographic films. Results scaled up to HRE-2 full-power operating conditions are presented in Fig. 3.41 as a function of position. From an integrated average dose rate from the curve, the pressure buildup of hydrogen gas was estimated to be between 0.5 and 0.7 psi per year, about an order of magnitude less than that previously predicted.[128]

The effect of shaft-seal configuration on mixing and radiation damage in the motor section of the pump was investigated.[130] By modifying the inlet to the lower suction port of the internal coolant pump, the amount of fuel solution mixing from the scroll to the motor was reduced to less than 0.02 liter/hr by purge rates as low as 10 liters/hr. Under these conditions, radiation damage to the motor by fuel solution in the motor cavity would be minor. Without purge flow the mixing rate was about 0.48 liter/hr.

By use of the results of the mixing experiments, the dose measurements,[129] and the radiation-damage criteria,[128] the life expectancy of the pump motor was estimated for different radiation sources.[130] The results of these estimates are given in Table 3.14. In addition to prolonging bearing life, the pump purge stream is very effective in preventing radiation damage to the motor. The values in the table for cell background radiation are based on a 1-in.-thick lead shield around the pump motor. Without the lead shield it was estimated that insulation would break down after 0.85 full-power year and the stator can would rupture after 0.78 full-power year.

In the calculations a dose of 6×10^8 rads was assumed to break down the electrical insulation. To obtain a more accurate estimate of the radiation dose required to cause failure of a class H motor winding, a small motor stator was tested to a dose of 3.8×10^9 rads in a Co^{60} assembly.[131] The test was terminated because a low resistance developed in an electrical cable near the submerged stator; but the stator winding insulation had a greater resistance for voltages between 0 and 1900 v than before irradiation.

In order to limit reactivity changes during startup and especially during the period when flow is being reestablished following a temporary stoppage of circulation, pump operation at reduced flow is desirable. Nuclear safety studies established that the flow rate should be limited to about one-third the normal flow rate for about 45 sec during pump startup. In an experiment designed to evaluate various means of achieving reduced flow rate by reducing the pump speed, the motor was inadvertently wired for reversed rotation. With the impeller rotating in the reversed direction, the pump capacity was about 25 to 30% of that for forward rotation.[132] Figure 3.42 shows motor input current and pump flow rate for reversed and forward rotation of the 400A pump. After extensive testing to determine the effects of starting the pump with reversed rotation before switching to forward rotation, this method was adopted for use in HRE-2.

Long-term maintenance-free operation of the 400A pump was demonstrated by operating a pump loop for 11,605 hr on fuel solution at 250°C.[133] The pump was fitted with a titanium impeller, a stainless steel thermal barrier with titanium wear ring and shaft-seal insert, and a stainless steel lower wear ring and diffuser. No measurable wear was noted in either of the radial bearings. Following an initial run-in increase in end play of 0.004 in., a thrust-bearing wear rate of approximately 0.001 in. per 1000 hr of operation was experienced over the last 11,000 hr of the test. On the basis of previous experience with similar thrust bearings, the pump could have operated trouble-free for at least another 12,000 hr.

The long-term maintenance-free run of the 400A pump was terminated in order to perform a gas-saturated run to determine whether gas bubbles in the fuel stream would be harmful to the pump.[134] The pump operated an additional 1585 hr without developing trouble. Disassembly and inspection of the pump revealed that corrosion and/or erosion had occurred in several places. It was concluded that the pump should not be operated with gas-saturated solutions.

A test was performed to determine if gas in the circulating stream would migrate to the motor cavity of the pump and gas bind the auxiliary impeller used to recirculate the internal coolant.[135] It was demonstrated that gas does migrate to the pump cavity; however, the gas vent and accumulation chamber adequately vent the top of the pump and prevent gas binding of the auxiliary impeller. Gas collected in the accumulation chamber is slowly dissolved by the purge stream as it passes through the chamber.

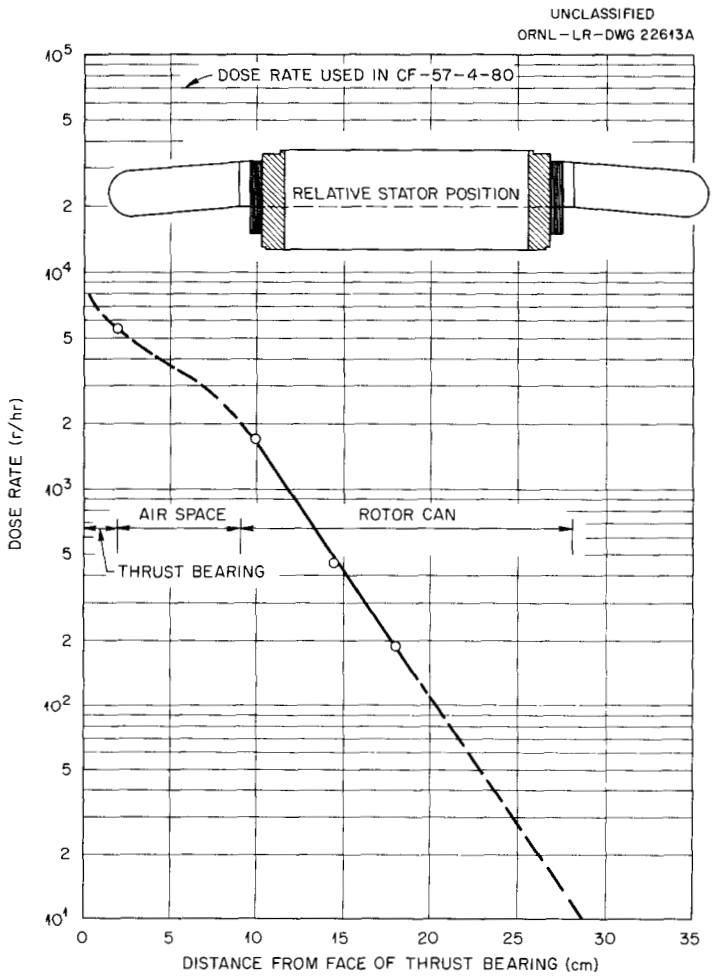

Fig. 3.41. Gamma Dose Rate at Pump Stator.

Table 3.14. Life Expectancies of HRE-2 Pump Motors

Source of Radiation	Expected Life Full Power Years
Failure Due to Electrical Breakdown of Motor Insulation	
Fuel solution in pump scroll	13.4
Fuel solution in motor (with purge)	38
Fuel solution in motor (without purge)	0.67
Cell background	6
Failure Due to Rupture of Stator Can by Hydrogen Pressure	
Fuel solution in pump scroll	12.3
Fuel solution in motor (with purge)	34
Fuel solution in motor (without purge)	0.60
Cell background	5

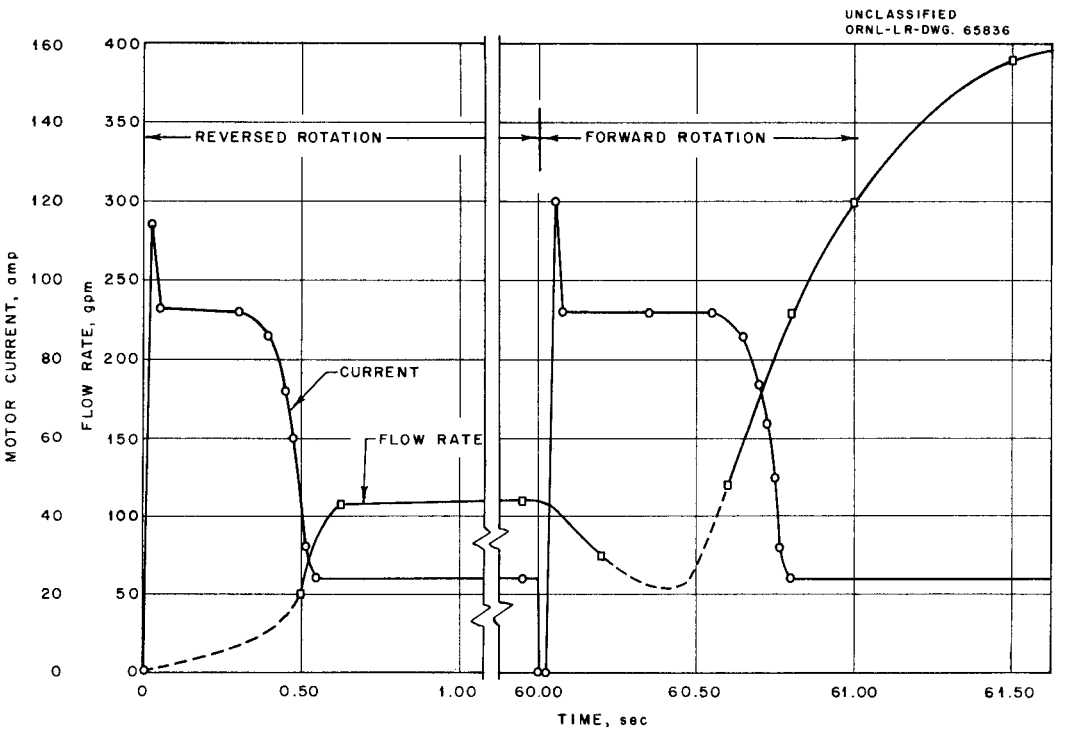

Fig. 3.42. Input Current and Flow Rate During Startup of 400A Pump.

3.7 FUEL AND BLANKET GAS SEPARATORS

3.7.1 Introduction

During normal operation of HRE-2 at a core power of 5 Mw, the radiolytic-gas production rate is estimated to be 0.161 lb-mole/min of stoichiometric D_2 and O_2.[136] In addition small amounts of fission product gases are produced. If the copper concentration and the solution temperature are high enough, most of the radiolytic gas will be recombined by the copper catalyst in the fuel solution. However, during low-temperature operation (less than 280°C, average core temperature), radiolytic gas will be present in the fuel stream leaving the core. An axial, or pipeline, gas separator is provided immediately downstream from the core to remove entrained gases before the stream enters the heat exchanger and pump. The gases and entrained liquid are removed to the low-pressure system for further processing. The blanket gas separator (item 30) is identical to the fuel gas separator (item 3).

3.7.2 Description

The gas separator, shown in Fig. 3.43, consists of three parts: a section of pipe fitted with vanes to impart rotation to the incoming fluid, a straight section of pipe in which gas is centrifuged into an axial void, and a set of straightening vanes at the discharge end to recover a portion of the energy of rotation. Gas is removed from the vortex through a nozzle in the hub of the recovery vanes. The internals of the gas separator are constructed of titanium; the pipe section is constructed of type 347 stainless steel.

The vaned sections are attached to a liner inside the pipe. Small weld pads center the liner in the pipe and provide a thin flow path around the outside to prevent crevice corrosion. The velocity through the annulus is estimated to be 2 to 4 fps.[137] An interference fit between the pipe and weld pads prevents vibration. Thermal cycle tests demonstrated the adequacy of this type of construction for the intended purpose.[138]

The rotation vanes have a parabolic, singly curved surface with an inlet angle of 10° to allow for prerotation and a 45° discharge angle. Twelve vanes, about 2 in. long and $\frac{1}{16}$ in. thick, are attached to a 1.45-in.-diam hub, having a parabolic upstream surface and a spherical downstream end. Twelve recovery vanes are also used, each about 2 in. long and having a parabolic, singly curved surface. The recovery vanes have an inlet angle of 40° to allow for some decay of the vortex and discharge parallel to the pipe axis. The upstream end of the 1.45-in.-diam recovery vane hub is also parabolic; the downstream end is a simple taper, as shown in Fig. 3.43.

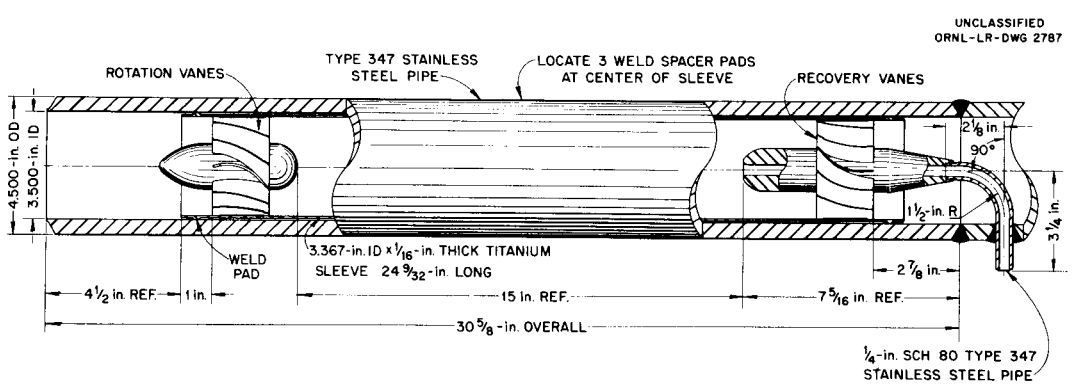

Fig. 3.43. HRT Gas Separator.

A 15-in.-long vortex section provides adequate residence time for all but the very fine bubbles to reach the vortex. The axial velocity of the fuel solution through the separator is 16 to 19 fps.[136] Additional construction details are noted in the figure.

3.7.3 Design Data

Design data for the fuel gas separator[136] are given in Table 3.15. Additional data pertaining to vane design are available.[137] On the basis of development and experience with other gas separators, the following general design criteria have been established:[139–143]

1. Stability of the void can be obtained by providing sufficient rotation to overcome gravitational forces.
2. Leading ends or edges of obstructions should be smoothly shaped parabolic surfaces.
3. The ends of the gas void should be stabilized on fixed convex surfaces. This is especially important on the downstream end.
4. The superficial velocity should be in the range of 6 to 20 fps.
5. The ratio of inside pipe diameter to hub diameter should be 2.5.
6. The vortex length should be at least two pipe diameters; a length of four pipe diameters is preferable.
7. The pressure drop of the liquid stream through a well-designed gas separator can be approximated by assuming efficiencies of 90 and 80% respectively, for conversion of pressure into kinetic energy of rotation and for recovery of rotational energy. Frictional drop in the vortex will be about three times that which would exist without rotation,
8. Gas-removal efficiency depends on bubble size and vortex length.

Table 3.15. Fuel-System Gas Separator Design Data

Temperature, °C	300
Pressure, psia	2000
Gas	
Gas load normal, lb-mole/min	0.13
Density, lb/ft^3	4.11
Viscosity, lb hr^{-1}ft^{-1}	0.058
Composition, %	
D_2	20
O_2	10
D_2O	70
Fuel solution	
Circulation rate, gpm	440
Concentration, g of U per kg of D_2O	16.3
Density, lb/ft^3	50.6
Viscosity, lb hr^{-1} ft^{-1}	0.25
Surface tension, g/sec^2	16
Axial velocity through separator, fps	16–19
Inlet tangential velocity, fps	17
Fuel entrainment rate in gas stream, gpm	1

The length of the vortex was made equal to four pipe diameters on the basis of experience with test models having 45° discharge angle rotation vanes. Calculations of the required length were made using forced and free vortex theory to compare with the recommended length.[136] Results of these calculations, see Fig. 3.44, show that the recommended vortex length is adequate for inlet tangential velocities above 13 fps.

A model of the HRE-2 gas separator was built and tested to determine final design criteria and pressure drop and liquid entrainment in the gas-removal stream.[137] At 400 gpm the overall pressure drop was about 5 psi. By throttling the letdown valve, the entrainment was held to less than 0.5 gpm at an estimated gas-removal efficiency of greater than 95%.

The high-centrifugal-force field in the gas separator suggested the possibility of also using the unit as a solids concentrator for increasing the solids content in the feed stream to the chemical plant. An investigation[144] indicated that particles of 8.7 μ diameter and larger would be thrown to the wall while passing through the unit and could be removed to the chemical processing plant. Since this application would necessitate redesign of the separator to provide an efficient take-off point for the chemical plant feed stream, it was not recommended.

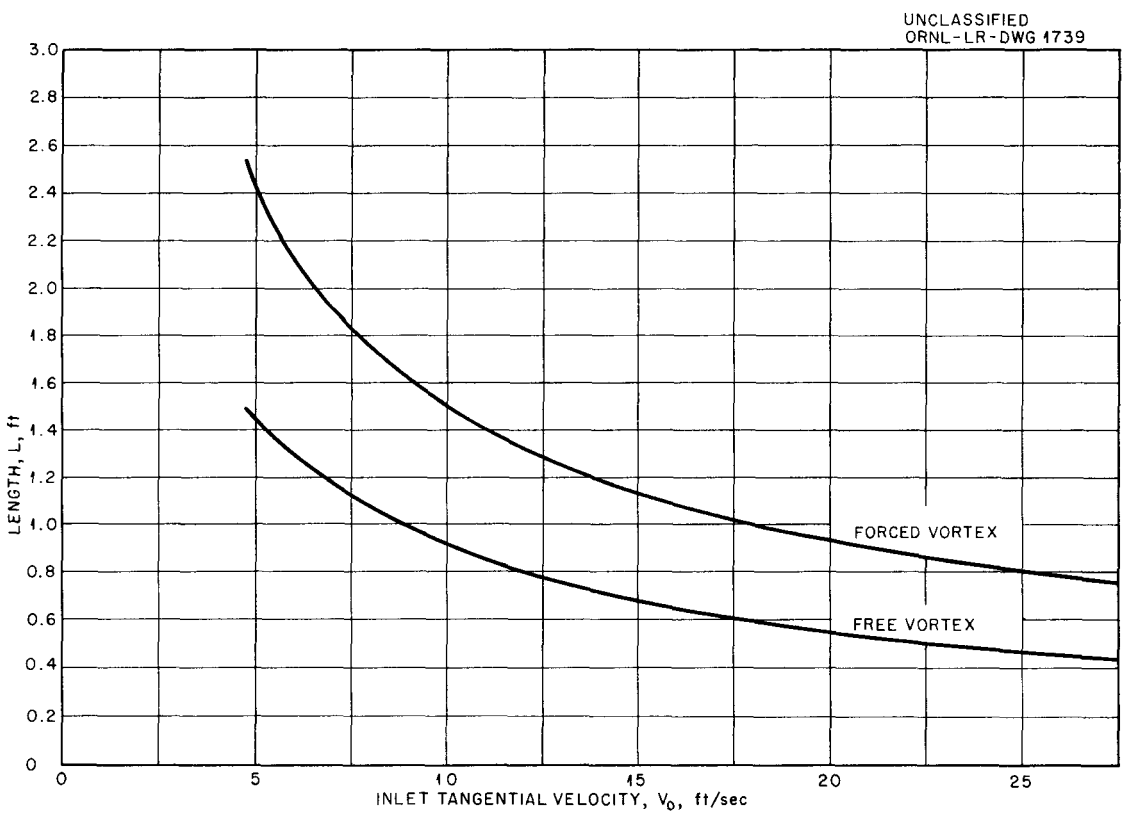

Fig. 3.44. Length of Vortex Required for Gas Separation.

3.8 HIGH- TO LOW-PRESSURE TRANSITION COMPONENTS

3.8.1 Introduction

HRE-2 is designed to operate with a continuous interchange of process fluids between the high- and low-pressure systems of the core and the blanket respectively. However, continuous letdown from the blanket high-pressure system is not required if the reactor is operated with a D_2O reflector. The purposes of the fluid interchange are to permit control of fuel concentration, to remove unrecombined high-pressure gases, and to permit production of purge water.

The fuel and blanket pressurizers are provided with valved vent lines through which noncondensable gases can be vented to their respective low-pressure systems for disposal. Radiolytic gas (dissolved and suspended in the circulating stream), small quantities of fission product gases, excess oxygen (added to the fuel solution for stability and control of corrosion), D_2O vapor, and liquid are continuously let down from the high-pressure fuel system to the low-pressure system for processing. The radiolytic gas is recombined, condensed, and returned to the high-pressure system with other condensate produced in the low-pressure system. Noncondensable gases are disposed of by an off-gas system. Concentrated fuel solution is returned to the high-pressure system to maintain a balanced condition during normal operation. Additional paths for transfer of high-pressure solutions to the low-pressure systems are through the dump (or drain) lines and through the high-pressure sampling stations. The transfer of fluids through these paths is not continuous.

A very large pressure differential (up to 2000 psi) exists across the components through which the transition between high-pressure and low-pressure is made. These units, having particularly severe and closely related service requirements, are discussed in this section. Principal items of equipment categorized as transition units are: letdown heat exchangers, feed pumps, purge pumps, and line coolers. Valves and sample stations are discussed elsewhere.

3.8.2 Fuel and Blanket Letdown Heat Exchangers

To minimize corrosion and erosion of the valve trim, the two-phase mixture being let down to the low-pressure system must be cooled to less than 100°C before entering the throttling valve. To conserve heat, the feed and pressurizer purge streams recover latent and sensible heat from the letdown stream in the three-concentric-pipe letdown heat exchanger.

Description. – A schematic drawing of the fuel letdown heat exchanger (item 20) is shown in Fig. 3.45. The fuel and blanket exchangers are alike except for shapes, which were determined by system layouts. Flanged connections are provided on the exchangers to facilitate remote removal and replacement of the units. Stainless steel type 347 is used for all parts of the exchangers.

The letdown stream flows through a 0.042-in.-thick annulus, formed by the outside of a 0.875-in.-OD 9-BWG tube (0.148 in. wall thickness) and the inside of a 1.0-in. sched-80 pipe. Small weld beads, spaced at 3-in. intervals along the 35.7-ft length of fuel heat exchanger (34.0 ft for blanket exchanger), center the tube and promote turbulence in the annulus. The feed stream being returned to the high-pressure system flows through the central pipe. The pressurizer purge stream flows through another annulus of 0.093 in. nominal thickness formed between the outside of the 1-in. pipe and the inside of a 1.5-in. sched-80 pipe. This jacket, 23.7 ft long on the fuel heat exchanger and 22.0 ft long on the blanket exchanger, is placed on the upstream end of the heat exchanger. A cooling-water annulus is provided on the downstream end of the exchanger. This annulus, 0.147 in. in nominal thickness and 9.5 ft long on each exchanger, is formed between the outside of the 1-in. pipe and the inside of a 1.5-in. sched-40 pipe.

Flow spoilers, in the form of solid rods, are inserted in the connecting pipes to the inner annulus to prevent separation of liquid and vapor in these sections of pipe.

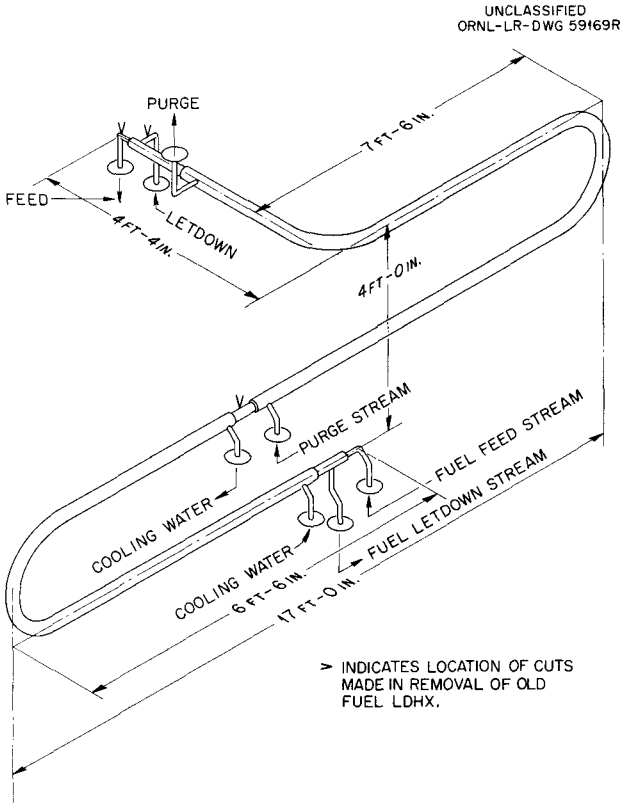

Fig. 3.45. Schematic of the Fuel Letdown Heat Exchanger.

Design Data. – To eliminate "slugging" and to promote efficient flow of the two-phase mixture through the letdown valve, separation of the liquid and gas phases in the letdown stream must be prevented. Tests on various letdown systems[145,146] and experience in HRE-1 indicate that two-phase flow can be accomplished without undue pressure surges in an annular flow passageway with numerous small spacers to maintain a uniform annulus thickness and to promote turbulence. The HRE-2 fuel letdown heat exchanger was designed to provide the same annulus thickness, the same mass flow rate per unit area, and the same spacer arrangement that had been successfully demonstrated in HRE-1.[147] Design data are presented in Table 3.16.

The original design[147] of the letdown heat exchanger did not include provisions for preheating the pressurizer purge stream. However, at the time the pressurizer design was modified (see Sec 3.4), an additional jacket on the letdown heat exchanger was specified to decrease the heat load on the pressurizer heaters.

Additional cooling of the letdown stream is required to prevent excessive temperatures at the letdown valve.

Corrosion. – It has been shown in an extensive materials research program, the details of which have been reported in the project progress reports (see ref 9 of Chap. 1), that corrosion of stainless steel in contact with HRE-2 fuel solution is a complex function of temperature, concentration, fluid flow, and several other variables.[14] However, it can be divided into three rather distinct temperature regions. In the first region, from room temperature to about 150°C, corrosion is rather mild and is not particularly sensitive to flow velocity, at least up to velocities ordinarily encountered in engineering systems. In the second region, from 175 to about 225°C, corrosion is severe and is very sensitive to flow velocity. At 200°C the rate is 8 mpy and at 225°C it is 29 mpy for 0.17 *m* uranyl sulfate at 10 to 20 fps. In this temperature range the rate varies directly with concentration, ranging from about 1 mpy for 0.04 *m* to about 50 mpy for

Table 3.16. Fuel Letdown Heat-Exchanger Design Data[a]

Letdown stream	
Inlet temperature, °C	300
Outlet temperature, °C	90
Mass flow rate, lb/hr	
Fuel solution	694
D_2O vapor	110
$2D_2 + O_2$	31.2[b]
(Total	835)
Heat released by stream, Btu/hr	40,000[b]
Flow area, ft^2	0.000819
Feed stream	
Inlet temperature, °C	50
Outlet temperature, °C	250
Mass flow rate, lb/hr	695[c]
Heat added to stream, Btu/hr	258,000
Flow area, ft^2	0.00183
Purge stream	
Inlet temperature, °C	50
Outlet temperature, °C	280
Mass flow rate, lb/hr	109[c]
Heat added to stream, Btu/hr	48,000
Flow area, ft^2	0.00284
Cooling water	
Inlet temperature, °C	38
Outlet temperature, °C	78
Mass flow rate, lb/hr	1300
Heat added to water, Btu/hr	94,000
Flow area, ft^2	0.00471

[a]Revised from data in ref 147 to include purge stream.

[b]Based on 5-Mw operation and 80% internal recombination of radiolytic gas.

[c]Difference in letdown and pumpup is returned to high-pressure system as purge to circulating pump.

1.3 *m* uranyl sulfate solutions.[143] Above about 250°C a heavy scale forms rapidly on the stainless steel; and, after it has been established, essentially complete protection from further corrosion is obtained, provided that the flow velocity is below 20 to 30 fps.

The velocity of the letdown stream in the heat-exchanger annulus was investigated for two system pressures.[148] Table 3.17a and b presents these results as well as values for the heat removed from the stream as a function of temperature. Figure 3.46 shows the variation of local stream temperature as a function of position in the heat exchanger. Although the results shown in the figure were computed before the purge-water heater section was added, the temperatures shown are about those expected in the final design. The figure indicates that a substantial portion of the heat exchanger operated in the temperature region where corrosion of stainless steel

Table 3.17a Flow Rate and Heat Released in Letdown Stream as a Function of Temperature[a]

Temp (°C)	Gas Flow (lb/hr)	D_2O Vapor Flow (lb/hr)	Liquid Flow (lb/hr)	Liquid Flow (ft^3/sec)	Saturated-Gas Flow (ft^3/sec)	Total Fluid Flow (ft^3/sec)	Fluid Velocity (ft/sec)
Flow Data for 2000 psia System Pressure							
300	31.2	110	693.6	0.00377	0.00955	0.01332	16.3
250	31.2	23	780.6	0.00379	0.00462	0.00841	10.3
200	31.2	6.5	797.1	0.00358	0.00336	0.00694	8.5
150	31.2	1.7	801.9	0.00340	0.00275	0.00615	7.5
100	31.2	0.35	803.4	0.00327	0.00236	0.00563	6.9
90	31.2	0.24	803.6	0.00327	0.00229	0.00560	6.9
Flow Data for 1700 psia System Pressure							
300	31.2	182	621.6	0.00338	0.01584	0.01922	23.5
250	31.2	27.7	775.9	0.00377	0.00585	0.00962	11.7
200	31.2	7.8	795.8	0.00357	0.00403	0.00760	9.3
150	31.2	2.0	801.6	0.00340	0.00326	0.00666	8.1
100	31.2	0.4	803.2	0.00324	0.00278	0.00606	7.4

[a]Based on 5-Mw operation and 80% internal recombination.

Table 3.17b Heat Removed from Letdown Stream (2000 psi System Pressure) as a Function of Temperature

Range of Temperature Change (°C)	Sensible Heat in Gas (Btu/hr)	Sensible Heat in Liquid (Btu/hr)	Condensation of D_2O Vapor (Btu/hr)	Total Heat (Btu/hr)
300–250	1485	75,700	61,900	139,085
250–200	1475	76,600	13,780	91,855
200–150	1465	74,000	3,890	79,355
150–100	1455	72,300	1,355	75,110
100– 90	290	14,100	100	14,500
			Total	399,905

[a]Based on 5-Mw operation and 80% internal recombination.

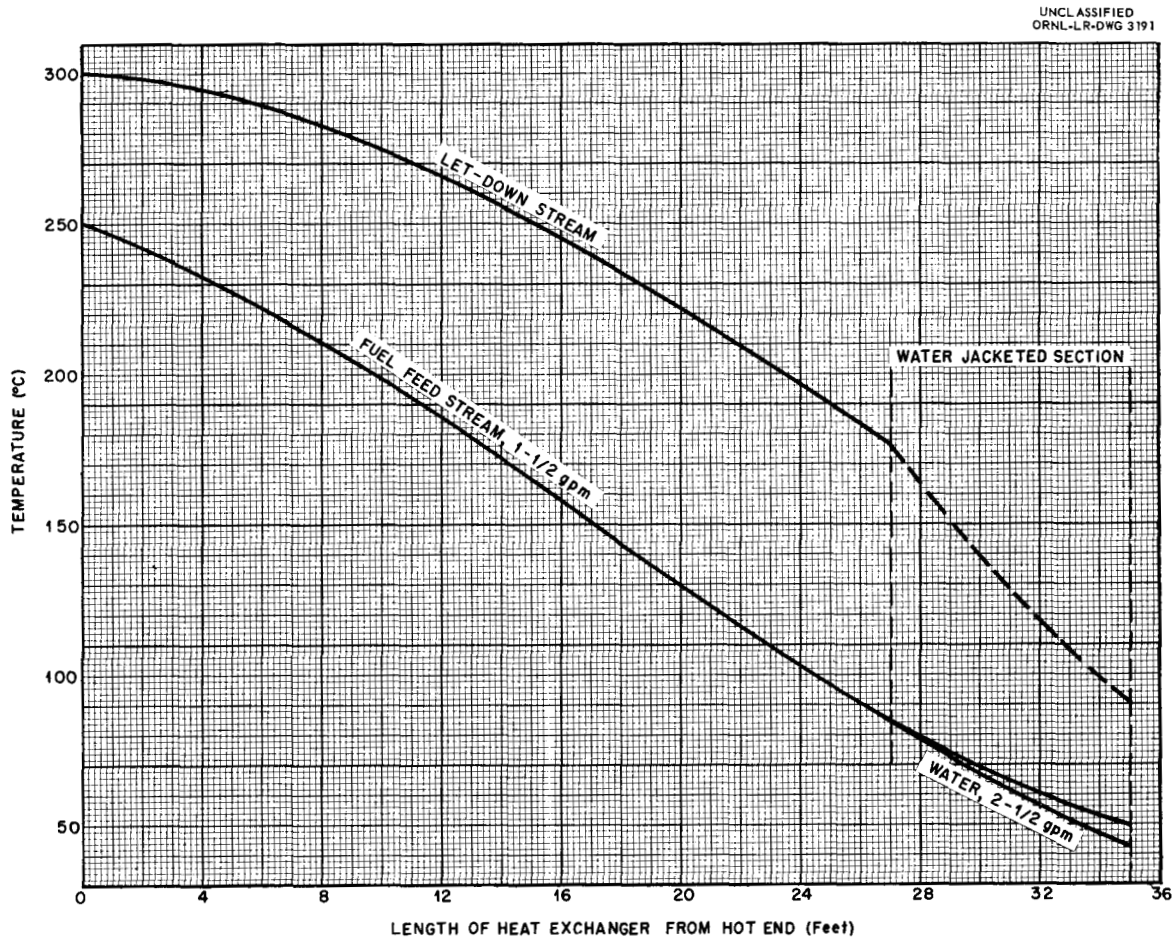

Fig. 3.46. Temperature Profiles in HRT Letdown Heat Exchanger at Design Flow.

is at its worst, that is, 150 to 250°C. (An internal leak developed in the fuel letdown heat exchanger shortly before HRE-2 operations were terminated.[149] The leak was determined to be across the innermost pipe, apparently the result of localized corrosion and/or erosion by the fuel solution in contact with both surfaces of the pipe. Metallographic examination of a HRE-2 mockup letdown heat exchanger had shown localized attack in regions operating in the range 150 to 200°C.[150])

Development. – Operation of the HRE-2 mockup indicated satisfactory thermal design of the letdown heat exchanger. However, a cooling-water flow regulator was used to control the temperature of the letdown stream in the range of 80 to 90°C at the letdown valve.[4]

Construction of the letdown heat exchanger from titanium would extend the useful life of the unit because titanium has a superior corrosion resistance. However, at the time the exchanger was designed and built, a suitable flanged connection for joining titanium to stainless steel was unavailable. An acceptable design, shown in Fig. 3.47, was later developed.[151] At that time a letdown heat exchanger and a pressurizer were constructed from titanium and installed in the HRE-2 mockup for evaluation. Nine of the transition joints were included with the two titanium components. The tests indicated satisfactory performance of all nine flanges and of the titanium components in severe corrosion environments.[152,153]

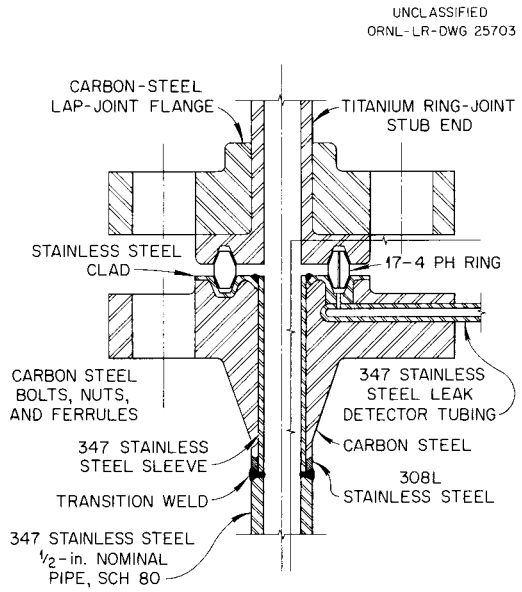

Fig. 3.47. Titanium–Stainless Steel Joint.

3.8.3 Diaphragm-Type Feed and Purge Pumps

Description. – Low-capacity, high-discharge-pressure, metering-type pumps are required in HRE-2 to pump process fluids from the low- to the high-pressure systems continuously, thus maintaining a balance between letdown and pumpup rates. Hydraulically driven metal-diaphragm pumps were developed for these applications. The following features contribute to the desirability of these pumps for homogeneous reactor service:

1. The pump head and check valves are of all-welded construction and should be leakproof and maintenance-free for long periods of time.
2. The only moving parts inside the biological shield are the metal diaphragm and the balls in the check valves.
3. The drive mechanism is located outside the biological shield, where conventional lubricants and maintenance techniques can be used.
4. The pump output is adjustable by changing the output of the drive unit.
5. In the event of a diaphragm failure, radioactive process fluid is still retained in the piping system.

As a result of an extensive development program (periodically reported in the project progress reports), detailed information was obtained on drive systems, diaphragm-head characteristics, diaphragm stresses, check-valve characteristics, and corrosion and erosion of check-valve trim. This program has been reported in detail in a status report on diaphragm-pump development[154] and in a terminal report on the design, development, and operating experience of these pumps.[155] It has been shown in test loops that, with proper design, material selections, and cleanliness, the diaphragm heads and check valves can operate continuously for at least two years.

HRE-2 feed and purge pumps consist of three main components: a drive unit, a pulsator, and a diaphragm-head assembly. Figure 3.48 shows the pulsator and diaphragm-head assembly used for the fuel and blanket feed pumps (items 21 and 41 respectively). The essential parts of a disassembled diaphragm feed-pump head are shown in Fig. 3.49. A purge-pump assembly is shown in Fig. 3.50. Except for size and details of construction, the purge pump is basically the same as the feed pump. ORNL Specifications[6] HRT-1021 and HRT-1023 apply to the feed and purge pumps respectively.

The diaphragm feed-pump system (illustrated in Fig. 3.48) operates as follows: A double-wall rubber boot in the pulsator unit is caused to expand and contract by an alternating oil pressure supplied by an electrically driven hydraulic pump. Pressure pulses from the pulsator (located outside the shield) are transmitted through the intermediate system to the diaphragm head located inside the reactor shield by a water column. As a result, reciprocating motion is imparted to the diaphragm, which pumps solution through the check valves from dump-tank pressure to system operating pressure. During normal operation the suction pressure is at about atmospheric and the discharge pressure may be as much as 2000 psi.

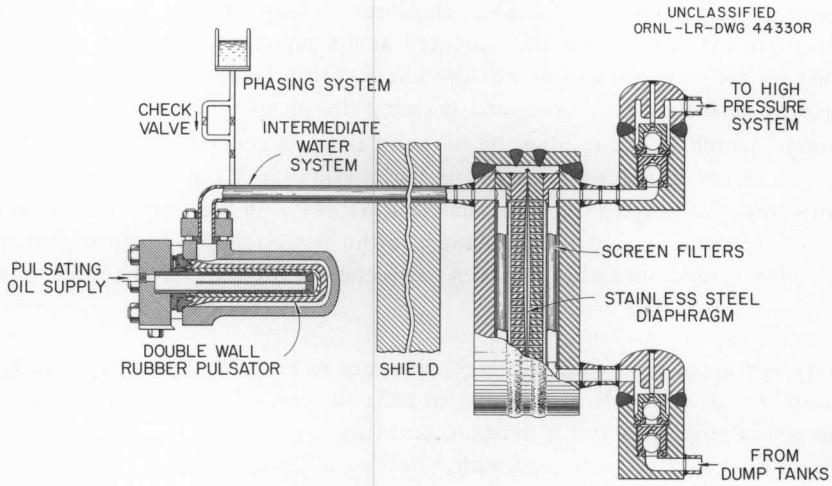

Fig. 3.48. Metal-Diaphragm Reactor Pump System.

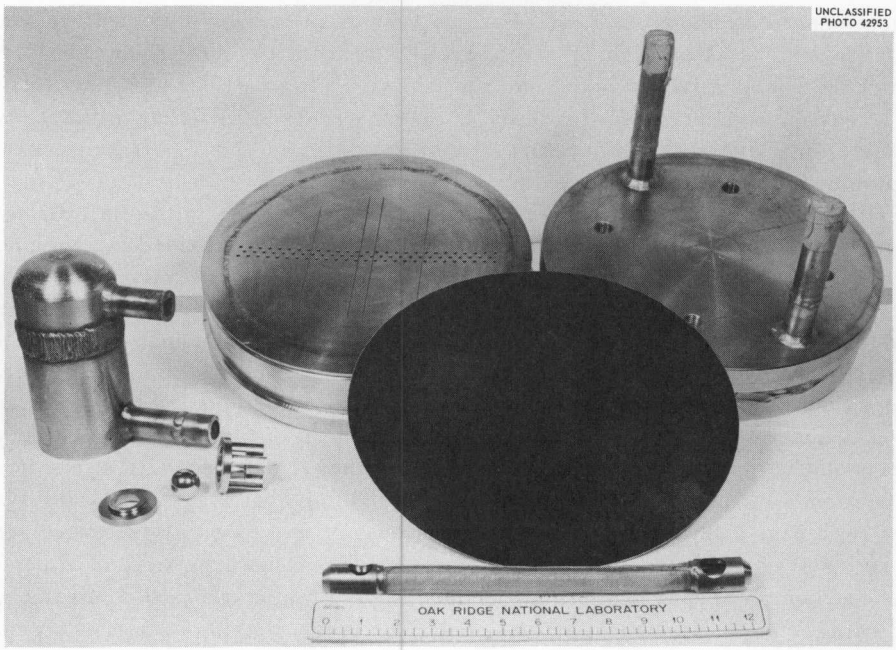

Fig. 3.49. Unassembled Diaphragm Pump Head.

In the feed pumps the stainless steel diaphragm operates between two contoured heads, which restrain its deflection to ±0.100 in. each side of center and support it such that the maximum theoretical stress is limited to an acceptable value. Fluid is admitted to the contoured cavities through three rows of 0.125-in.-diam holes drilled into the head from the contoured face to intersect a 1-in.-diam hole drilled through the head on a diameter. A filter unit made from 100-mesh stainless steel screen and special end fittings is inserted in the 1-in.-diam hole to prevent solids from entering the contoured cavity. Welds on each end of the filter seal the 1-in.-diam hole, as shown in Fig. 3.48. Special precautions are taken to eliminate bypassing of the filter by the fluid as it enters and exits from the head. The screen is automatically cleaned by the alternating flow on each pumping cycle. Two external connections, which interconnect the 1-in.-diam hole and the check valves, complete the internal flow path on the process side of the pump head. A single external connection, located at the top of the head (as shown in the figure), is provided on the intermediate side. The check-valve connections are located at the high and low points to facilitate venting and draining the pump cavity.

The diaphragm, which is firmly clamped between the two contoured backup flanges, acts as a flat gasket and, in effect, provides the primary seal against leakage. An extremely large clamping force results from shrinkage in two circumferential welds in the outer closure ring. A secondary seal is provided by joining the diaphragm to the two backup flanges with a seal weld.

Double-ball gravity-operated check valves were chosen for the following reasons:[155]

1. Since gravity operation eliminates springs, the number of moving parts is held to a minimum.
2. High-precision balls are readily available in materials suitable for check-valve trim.
3. A ball plug needs guiding only for dynamic stability.
4. A line contact seal is always formed with a ball on a conical seat.
5. The use of two balls in series reduces the possibility of leakage and erosion in the event a foreign particle should hold one of the balls off its seat.

The suction check valves operate from 78 to 128 counts/min on a pressure cycle alternating from subatomospheric to about 2000 psi. Fatigue failures of suction check valves were encountered in earlier designs as a result of severe cyclic stresses. As an outgrowth of development, the design of the check valves evolved into that shown by Figs. 3.51 and 3.52, which show, respectively, construction details for feed- and purge-pump valves. It is noted that the discharge check valves are not subjected to severe cyclic stresses, since they operate at essentially discharge pressure.

Shrink fits are used to prevent leakage around the seats. Cages with small diametrical clearances guide the balls and limit their lift. The lower cage is retained by the upper seat; the upper cage is retained by the pin protruding through the cap of the valve body. The weld joining the cap to the body, the source of fatigue failures in earlier designs, is located in a more favorable position for cyclic stresses. Radial relief is provided for weld shrinkage. The machined boss inside the cap is provided to eliminate volume and to reinforce the cap.

The normal stroke of the diaphragm in the feed-pump heads is limited by the output of the drive unit to about one-third the total available displacement of 6.25 in.^{3}. It is intended that the diaphragm not deflect to either extreme in normal operation, but that its stroke be centered about the neutron position by proper adjustment of a phasing system. The phasing system, shown schematically in Fig. 3.48, permits injection or removal of water from the intermediate system through a series of check valves and hand-operated valves. This operation, in effect, lengthens or shortens the liquid column "piston rod" connecting the diaphragm to the pulsator and thereby permits adjustment of the diaphragm neutral point. A similar phasing system is provided on the purge-pump intermediate systems. Pump output is controlled by adjustment of the variable-output drive unit.

MATERIALS LIST

ITEM NO.	DWG. NO.	QTY.	NAME	SIZE	MATERIAL
1	D-18263	1	Head INTERMEDIATE	SEE DETAIL	HRP200A
2	C-18263	1	Closure Ring	see Detail	
3.	This Dwg	1	Diaphragm	.7063 Dia. x .0019 thk	ASTM-A240-54 TYPE 347 2 ANA
4	D18263	2	NIPPLE	See Detail	HRP200A
5.	D-25513	1	Discharge Check Valve	" "	
6.	D-25513	1	Suction Check Valve	" "	
7	C-18263	1	Head Process	" "	HRP200A
8.	D-18263	1	NIPPLE	" "	HRP200A
9	D-27858	2	STRAINER ASSEMBLY	" "	

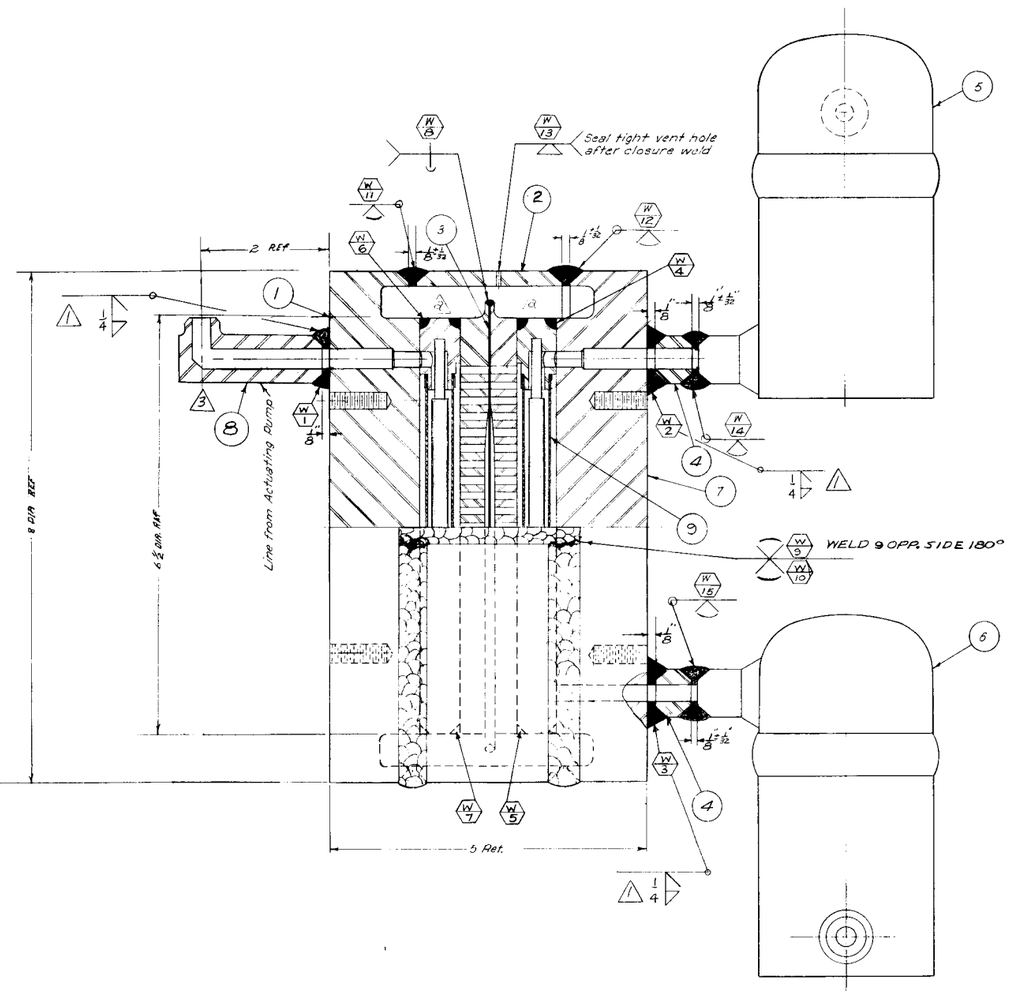

General Notes:

1 Design pressure & temperature -2100 psi @ 180°F.
2 Hydrostatic test pressure 3300 psi.
3 Diaphragm pump head assembly shall meet the requirements. of H.R.T.-1021 Specs,
4 Welding to comply with RD1.2-1 except welds 9,10,11,& 12 to comply with RD1.2-2
5. Inspection RD14-1 Schedule A.
6 Fabrication procedure as given below shall be strictly adhered to.

Fabrication and Testing Procedure,

1 Extreme care must be exercised throughout the fabrication and assembly of component parts to prevent scratches on diaphragm, contoured surface, and entry of dirt, chips, weld spatter, or other foreign matter. All parts must be thoroughly degreased and free of chips before assembly with mating parts.
2 Make welds in the order indicated by the weld number.
3 All welds must meet the requirements of RD1.2-1, except for joint design.
4 The nipples must be welded to the head, And the head cleaned before welding the strainers.
5 The strainers And Nipples must be welded to the heads before contouring. The strainer should be positioned so the bored holes are aligned with the nipple connections of the heads.
6 After contouring the heads and cleaning, the diaphragm is centered in position and the nipples aligned, the heads should be clamped with six or eight C-clamps while making the seal weld. Backup gas should be on both sides of the diaphragm from a common source. After inspection of the seal weld, a vacuum leak detector should be used to check for leakage on each side of the diaphragm.
7 The C-clamps may be removed (without stressing the seal weld) and the center half rings tacked in place so the vent hole will be on top. To protect the seal weld from excessive thermal stress, the assembly should not be allowed to get very hot while making the girth welds which may be made simultaneously.
8 Weld the check valves to the head so the vent hole is on top
9 The completed assembly is given a 3300 p.s.i. hydrostatic pressure test. (No differential across diaphragm) Check to see if there is leakage to the shell cavity.
10 The final test is a helium leak test to be made on each side of the diaphragm with a helium atmosphere around the assembly and in the shell cavity.

NOTE:
This Dwg. Supersedes Dwg. D-18259 Rev. C.
Assembly redesigned & redrawn from D-18259 Rev. C.

NO.	REVISIONS	DATE	APPR.	APPR.
e	7. DELETED NOTE #11 6. WELD. INSP. SPEC. ADDED 5. WELD. SPEC. WERE HRP 1.2-1/3 4. MAT'L. NOTED AS HRP 200A	HMFF 25-16		
d	3. ITEM 8 WAS STRAIGHT NIPPLE CHANGED TO NIPPLE WITH 90° ELL	LEP 2-1-60	JCJ	
c	2. Added Note 11 1. Added weld size	RDS 8-1-58		
B	D-18262 & C-18265 WAS REMOVED FROM REF. COLUMN GENERAL NOTES ADDED ITEM-9 ADDED TO MATL LIST ITEM-4 & 8 REDESIGNED WELD SYMBOLS REARRANGED	F.F.M 11-7-57	CHK 4-17-57	
a	Strainer Added to Item 1 & 7	3-9-57 CHK		

DRAWING NO. D-

DRAWN	DATE	CHECKED	DATE	APPROVED	DATE
Ludlow	5-16-56	F.N. Chapman	5-16-56	W.R. Stall	5/17/56
DESIGNED	DATE	SUBMITTED	DATE	APPROVED	DATE

HEALTH PHYSICS	MEDICAL	OPERATIONS	SAFETY
FIRE PROTECTION	RESEARCH SHOP	MAINTENANCE	

	REFERENCE DRAWINGS	DWG. NO.
	Strainer Details & Weld. Jig	D-27858
	Purge Pump Check Valves	D-25513
	Closure Ring & Plug	C-18264
	Head-Pumping Side	D-18263

REVISED MAR 7 1957 MAR 2 4 1959 FEB 3 1960 Nov 25, 60 JAN 3 0 1961

APPROVED FOR CONSTRUCTION R. B. DIXON MAY 17 1956

THIS DRAWING CLASSIFIED AS OFFICIAL USE ONLY PER T.I.T.

SCALE Full Size

HRT BLDG. 7500

PURGE PUMP HEAD ASSEMBLY

OAK RIDGE NATIONAL LABORATORY
OPERATED BY
UNION CARBIDE NUCLEAR COMPANY
A DIVISION OF UNION CARBIDE AND CARBON CORPORATION
OAK RIDGE, TENNESSEE

SUBMITTED	ACCEPTED	APPROVED
		5-17-56

D-25592 REV e

Fig. 3.50. Purge-Pump Head Assembly.

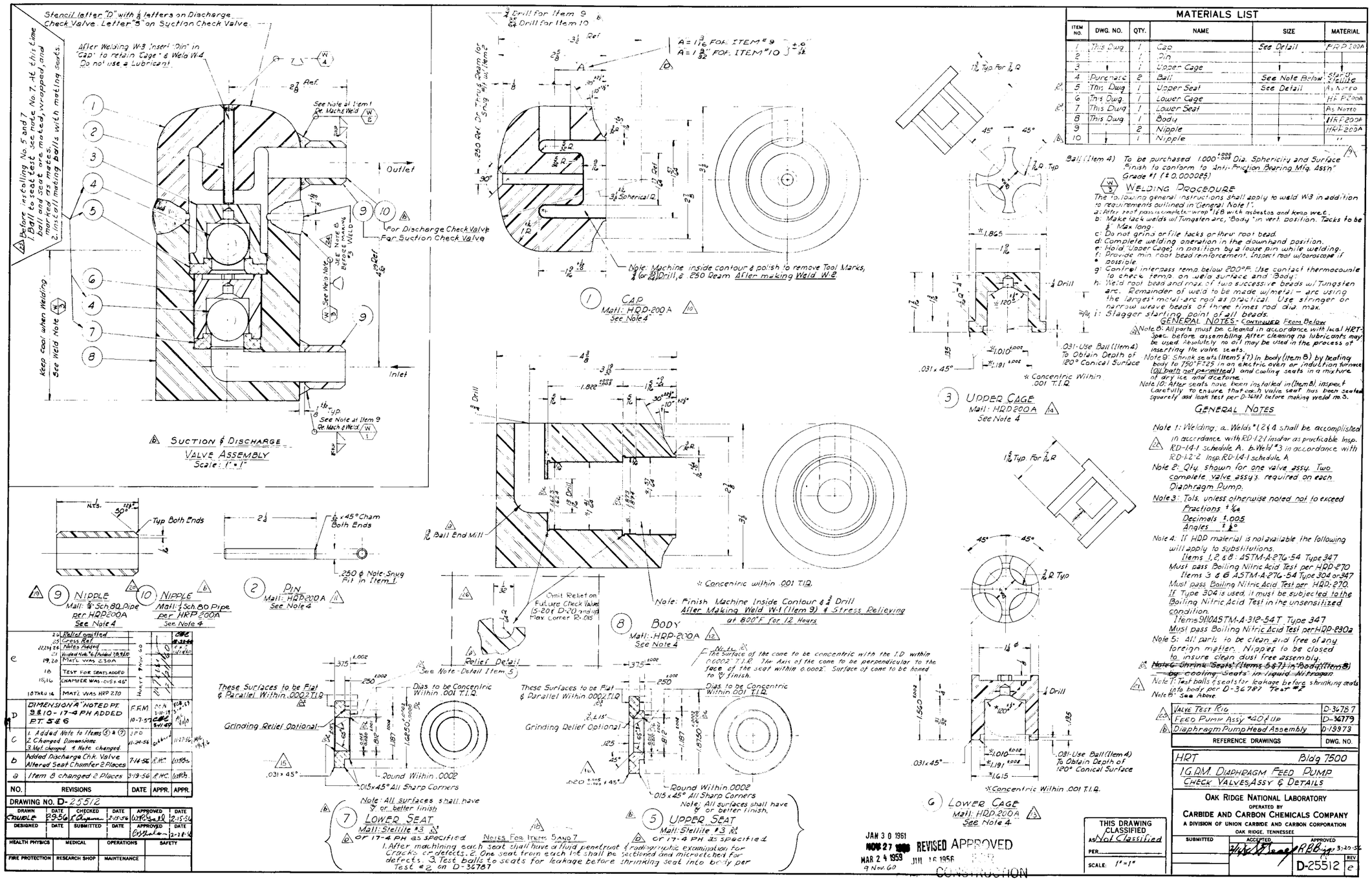

Fig. 3.51. 1-gpm-Diaphragm Feed-Pump Check Valves – Assembly and Details.

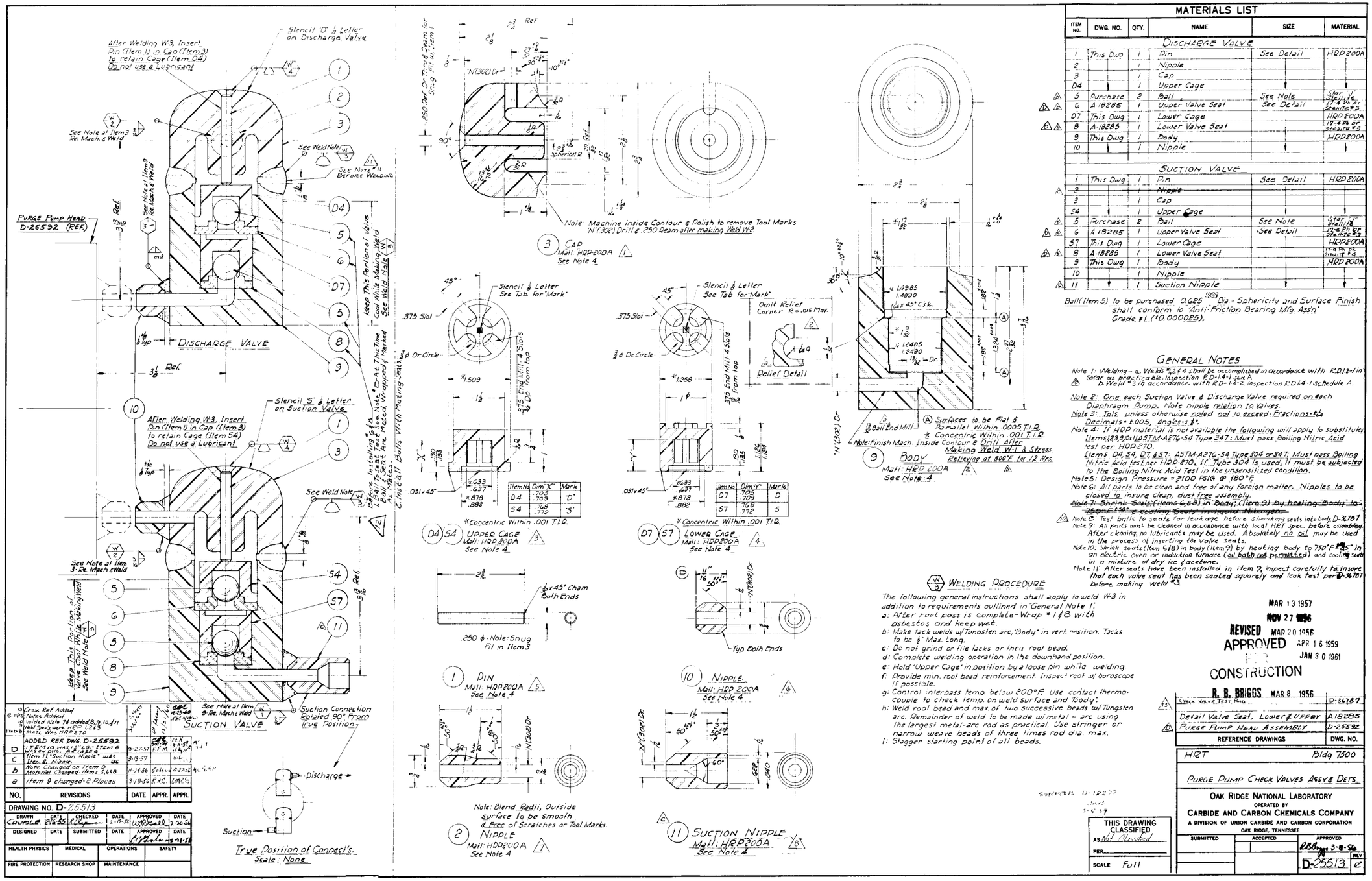

Fig. 3.52. Purge-Pump Check Valves – Assembly and Details.

The proper amount of water in the intermediate system is important for smooth operation and long diaphragm life. Insufficient water will cause the diaphragm to bottom on the driving contour before the end of the suction stroke. Likewise, too much water will cause the diaphragm to bottom on the pumping contour before the end of the discharge stroke. Either of these conditions reduces the pump output and creates undesirable operating characteristics. Figure 3.53 shows a typical case of feed-pump output as a function of intermediate system water volume. It is apparent from the figure that it is desirable to operate on the flat portion of the curve. Figure 3.54 shows typical pressure vs time traces for various phasing conditions.

Abnormal operating conditions are frequently accompanied by noisy operation of the diaphragm head and the check valves. To take advantage of this diagnostic characteristic, sound transmitters are provided to monitor the pumping unit for unusual noises during operation.

Diaphragm pumps are particularly susceptible to gas binding because of their unusually low compression ratio (approximately 1.1 in the feed pumps). A vent system, shown schematically in Fig. 3.55, is provided to relieve the feed pumps if they become gas bound. The system consists of a bypass line from the pump discharge to the dump tank with a normally closed valve. A freeze jacket maintains an ice plug upstream of the valve for positive shut-off of the bypass during normal operation. A slow-acting ball check valve, located as shown in the figure, prevents backflow from the high-pressure system during venting operations. This check valve has a high ball lift and guides which restrict the flow such that the ball does not have an opportunity to seat during normal pump operation.

A vent system is not provided on the purge-pump installations since experience had shown these pumps to be less susceptible to gas binding.

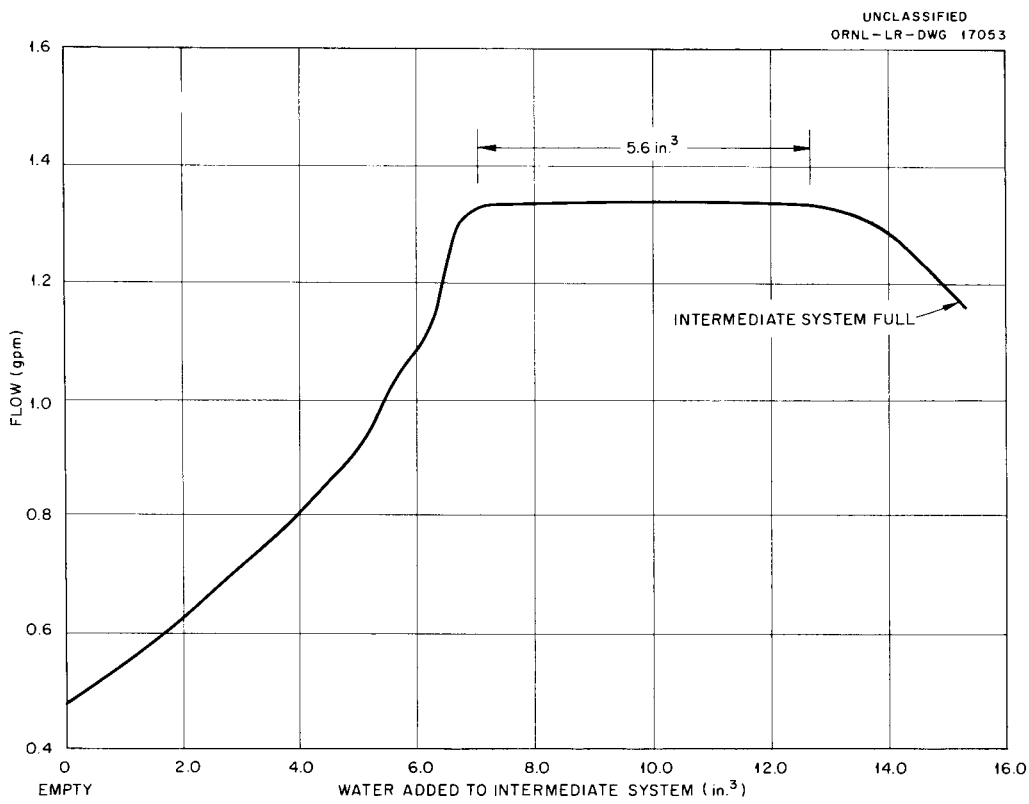

Fig. 3.53. Flow vs Water Added to Intermediate System – Diaphragm-Pump Test Loop.

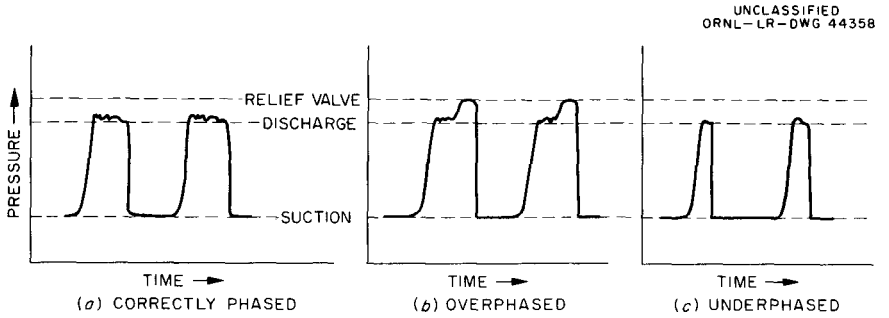

Fig. 3.54. Pressure vs Time Traces for Various Conditions of Phasing.

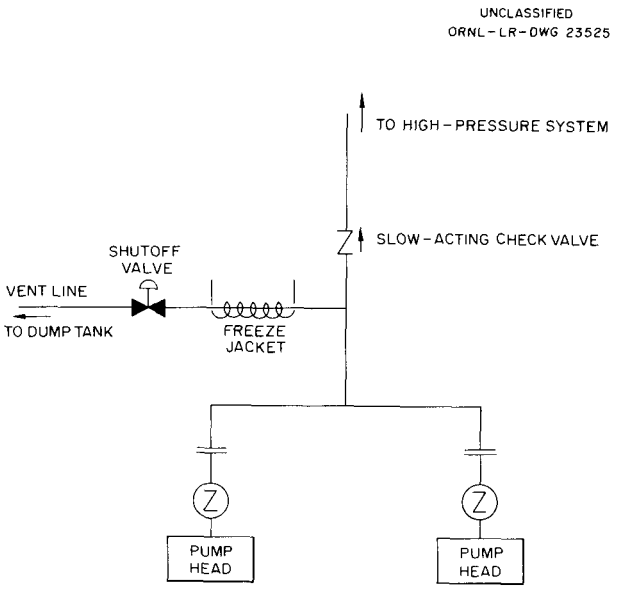

Fig. 3.55. Feed Pump Venting System.

With a Scott and Williams P-9 duplex driving unit to drive two pulsator–diaphragm-pump-head combinations at 78 strokes/min, the duplex pump is easily capable of supplying 1.5 gpm output at 2000 psi discharge pressure. During filling operations, when the discharge pressure is about atmospheric, pump output is about 3 gpm (as shown by Fig. 3.56). The decrease in pump output in going from atmospheric to 2000 psi discharge pressure is largely due to the compressibility of the intermediate water coupling system. Input power as a function of pump capacity is shown for discharge pressures of 500 and 2000 psi in Fig. 3.57. The power required for the lower discharge pressure is indicative of the power required during filling operations.

The fuel and blanket pressurizer purge pumps (items 23 and 104 respectively) and the fuel- and blanket-circulating pump purge pumps (items 108 and 109 respectively) use the diaphragm-pump-head assembly shown in Fig. 3.50. Scott and Williams 1-LB simplex, variable-speed, reciprocating drive units are used as prime movers for the purge pumps. At the rated speed of 120 strokes/min, the purge pumps are capable of supplying 15 gph at a discharge pressure of 2100 psi. However, the pressurizer purge pumps are operated at 77 strokes/min to produce a flow of about 10 gph. Similarly, the purge pumps supplying purge water to the circulating pumps are driven at 30 strokes/min to produce a flow of about 3.5 gph.

Drive Systems. – High-pressure diaphragm pumps must be hydraulically operated. Since rupture of the diaphragm may introduce the hydraulic fluid into the process fluid, the most acceptable hydraulic fluid for use in HRE-2 is distilled heavy water. The hydraulic fluid can be pulsed directly by a water-operated pulse generator or indirectly by generating a pressure pulse in oil and transferring it to the water column through an intermediate barrier. Although the direct water-operated pulse generator is attractive, the latter approach was selected for use in HRE-2. This choice was made on the basis that tests of water-operated pulse generators had indicated a short service life, mainly because of the poor lubricating qualities of water.[155]

A double-wall rubber pulsator supported on a perforated hollow steel mandrel inside a pressure chamber separates the oil system from the intermediate water system. As oil is alternately introduced and exhausted through the hollow mandrel, the double-wall rubber boot expands and contacts, thus pulsating the water in the pressure chamber to impart reciprocating motion to the diaphragm pump. A detector constantly monitors the region between the double walls of the rubber boot for leaks.

Scott and Williams P-9 slide-valve pulse generators are used to drive the feed pumps. A constant-speed, variable-stroke, rotary-type, positive-displacement oil pump discharges oil through a slide-valve distributor to expand alternately each of the pulsators. Energy for the

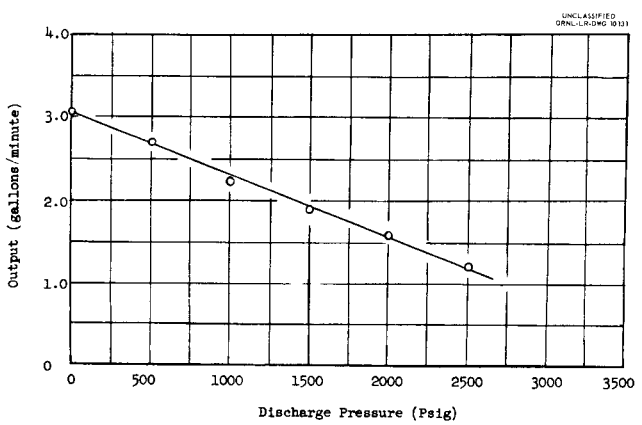

Fig. 3.56. Feed Pump Output vs Discharge Pressure.

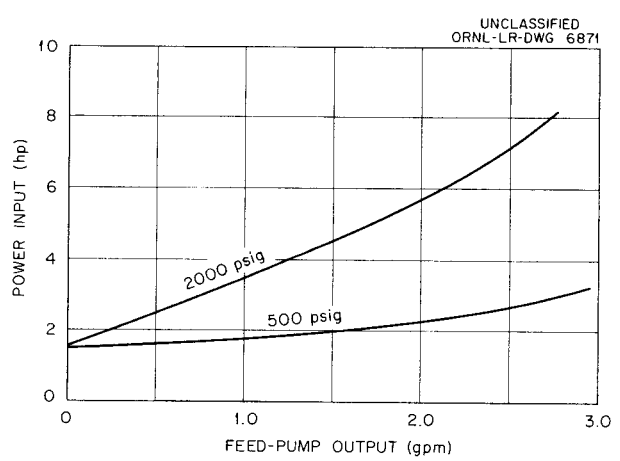

Fig. 3.57. Power Requirement of Scott and Williams Type Feed Pump.

suction stroke of the pump is provided by the stored energy in the expanded double-wall rubber pulsator. Feed-pump output is varied by stroke adjustment on the rotary oil pump.

Scott and Williams 1-LB reciprocating pulse generators are used to drive the purge pumps. The reciprocating pulse generator consists of a plunger operating in a cylinder with a radial port arranged so that the plunger uncovers the port at the end of each suction stroke. The cylinder operates submerged in oil, permitting the port to make up plunger leakage on each stroke. Oil discharged from the cylinder by the plunger expands the double-wall rubber boot in the same manner as the slide-valve pulsator. The reciprocating drive provides the energy for the diaphragm suction stroke. Purge-pump output is varied by adjustment of the variable-speed coupling joining the constant-speed motor and the reciprocating pulse generator.

Design Data. – ORNL Specifications HRT-1021 and HRT-1023[6] cover design criteria, materials of construction, special welding requirements, and inspection and tests required to design and fabricate feed and purge pumps respectively. Pertinent data are given in Table 3.18.

Initial theoretical and experimental stress studies,[156] followed by a more extensive investigation,[157] showed that the volumetric displacement for a given maximum diaphragm stress may be increased if the diaphragm is forced into a two-radii contour instead of a free-deflection contour. The two-radii contour is specified by the radius of a central spherical surface and an outer toroidal surface tangent to the inner region as shown in Fig. 3.58. Table 3.18 gives the dimensions used in the feed and purge pumps. The outer constant-radius toroidal surface limits the bending stresses at the edge of the diaphragm, while allowing the bending stress in the remainder of that part of the diaphragm in contact with the toroidal surface to be increased. The variation of the ratio of volumetric displacement to maximum combined stress with the ratio of contour radii exhibits a maximum value, which is dependent on the ratio of diaphragm thickness to depth of contour.[157] Figure 3.59 is a dimensionless plot of the volume-stress ratio as a function of Z, as defined in Fig. 3.58. Equations necessary for a complete stress analysis of the diaphragm have been reported.[155,157] By use of the Mises-Hencky criterion for fatigue failure, allowable combined stress values of 20,000 and 28,000 psi are recommended for the feed- and purge-pump diaphragms respectively.

As the result of shrinkage in the circumferential welds in the outer closure ring, an initial force of large magnitude is applied to the portion of the diaphragm clamped between the two contoured backup flanges, which in effect provides a gasketed joint for the primary seal. In addition to the diaphragm clamping force, the outer ring provides the pressure-restraining force during pumping operations. A theoretical and experimental stress analysis of the backup flanges and closure ring[158] indicated these portions of the pump head to be satisfactory.

The required pulse volume can be approximated by[155]

$$V_p = V_s + kPV_D ,$$

where

V_p = pulse volume, in.^{3}

V_s = desired volumetric stroke of diaphragm head, in.^{3}

V_D = fluid volume of the hydraulic drive system, in.^{3}

P = pump discharge pressure, psi

k = conversion factor = 5×10^{-6} psi^{-1}.

The term kPV_D represents the pressure-cycle losses in the hydraulic drive system. In the HRE-2 feed pumps these losses are about equal to the desired volumetric stroke, so that the pulse capacity of the drive unit must be about double the desired capacity of the feed pump. Figure 3.60 gives a comparison of static and dynamic losses in a feed-pump system similar to that in HRE-2 operating at a discharge pressure of 2000 psi.

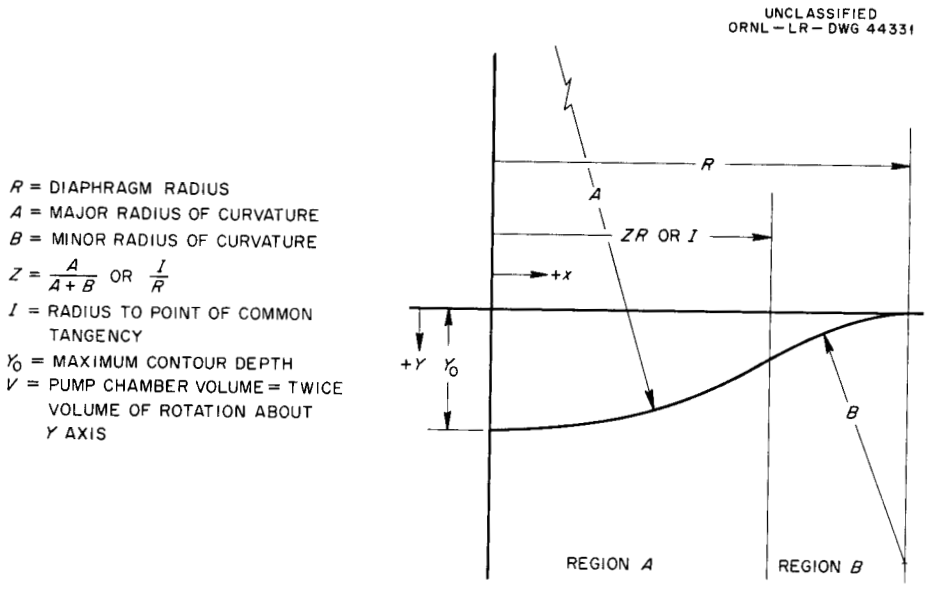

Fig. 3.58. Description of Two-Radii Contour.

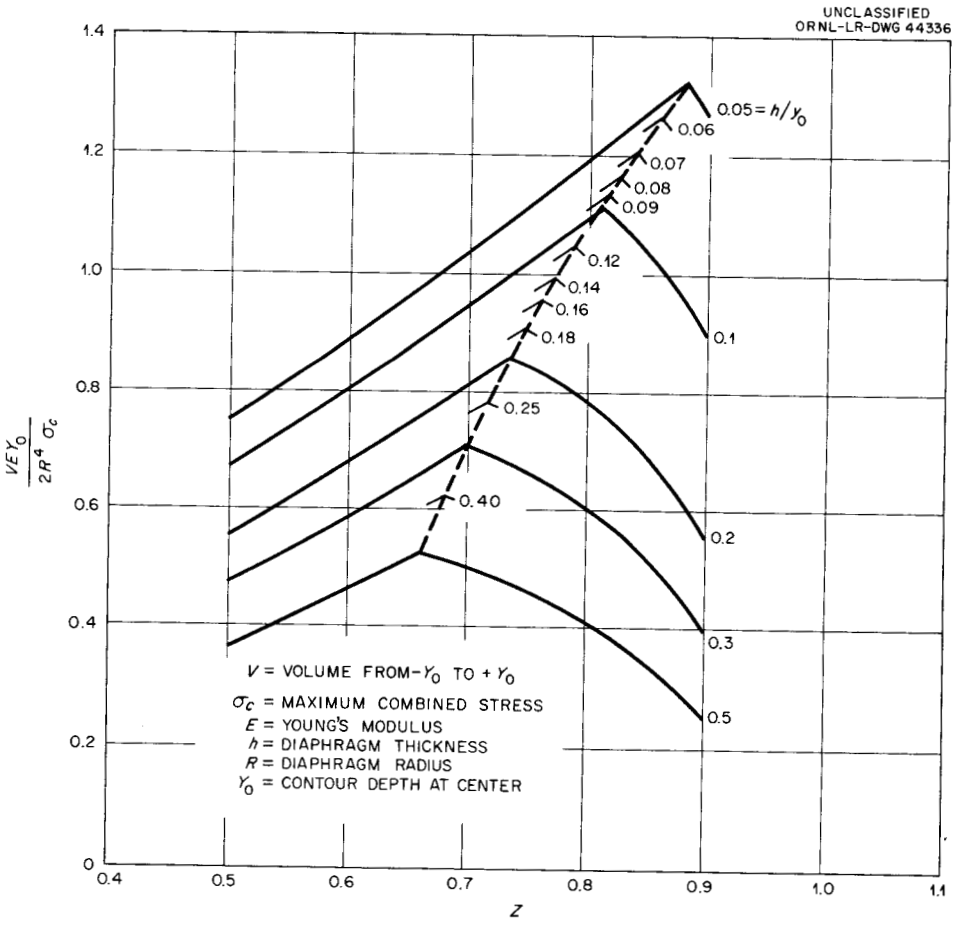

Fig. 3.59. Volume-Stress Ratio vs Z for Various Values of h/Y_0.

Table 3.18. Diaphragm-Pump Design Data

	Feed Pump	Purge Pump
Maximum discharge pressure, psi	2100	2100
Minimum flow rate at 2100 psi, gpm	1.5	0.15
Maximum discharge temperature, °F	180	180
Diameter of contour, in.	10.000	5.500
Depth of contour, in.	0.100	0.067
Radius of inner region of contour, in.[a]	112.5	43.0
Radius of outer region of contour, in.[a]	32.0	18.0
Contour volume (total for both contours), $in.^3$	6.25	1.74
Thickness of diaphragm, in.	0.031	0.019
Maximum calculated combined stress, psi	21,000	29,000
Value of x/R for maximum combined stress[a]	0.8	0.7
Diameter of check-valve balls, in.	1.000	0.625
Diameter of port in check-valve seats, in.	0.812	0.535
Construction materials		
Diaphragm	*b*	*b*
Diaphragm backup flanges	*c*	*c*
Closure rings	*d*	*d*
Connecting pipes and nozzles	*e*	*e*
Filter	*f*	*f*
Check-valve body	*g*	*g*
Check-valve balls	*h*	*h*
Check-valve seats	*i*	*j*

[a]See Fig. 3.58. Radii are exact for feed pump, approximate for purge pump.
[b]ASTM A-240, grade C, mirror-finished, fully annealed sheet.
[c]ASTM A-182, type 347 forgings.
[d]ASTM A-240, grade C, hot-rolled and annealed plate.
[e]ASTM A-312, type 347, seamless pipe.
[f]AISI type 347, stainless steel, 100-mesh screen.
[g]ASTM A-276, type 347, hot-rolled and cold-finished round bar stock.
[h]Stellite Star J.
[i]Stellite 3.
[j]Stainless steel, type 17-4 PH, R_c-40 hardness.

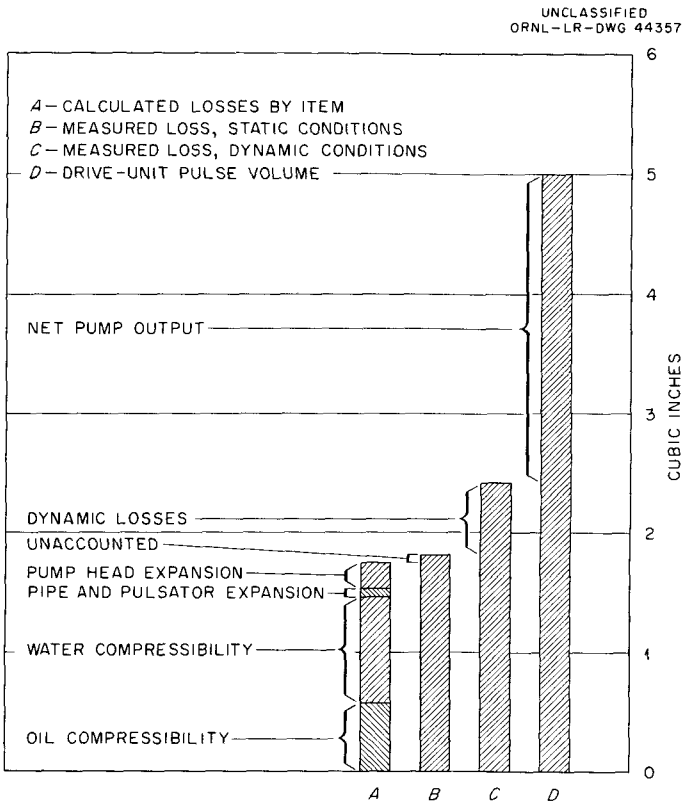

Fig. 3.60. Volumetric Losses per Stroke in a Two-Fluid Drive System with Intermediate Barrier; $V_D = 170$ in.^{3}.

Development. – A special test loop was constructed to study the dynamic behavior of diaphragm feed pumps.[159] The test system was equipped with an accumulator and a throttling valve to maintain the discharge pressure constant at pressures to 2000 psi. The effects on pump output of intermediate system volume, temperature of pumped solution, suction pressure, discharge pressure, system layout, and air addition to both the high- and low-pressure sides of the pump were investigated.[160]

The studies related to air additions were designed to simulate oxygen addition to the reactor system. As a result of these tests and operation of the HRT mockup, the maximum oxygen content for low-pressure oxygen addition was specified as 120 ppm.[4] However, the addition of high-pressure oxygen in HRE-2 relieved the tendency for the feed pumps to become gas bound.

Much of the diaphragm-pump-development effort was directed toward increasing the service life of the thin metallic diaphragms. It appears possible to design a pump chamber contour such that the theoretical maximum diaphragm stress is limited to a value well below the endurance limit of the diaphragm material. However, a number of premature diaphragm failures indicated stresses higher than expected and/or a lower endurance limit than ordinarily reported for diaphragm materials.[154,155,161] A systematic program was initiated to investigate the factors which significantly influence these design parameters.[154]

The important factors affecting diaphragm stress level are contour shape, presence of foreign matter in the pump chamber, and dynamic behavior of the diaphragm. Each of these factors was thoroughly investigated.

Theoretical and experimental studies of the effect of contour shape on diaphragm stresses produced design techniques which permit optimization of the contour radii with respect to diaphragm parameters.[154–57] These investigations indicate the presently specified contours are near the optimum, and further refinement is not warranted.

Most of the cracks in failed diaphragms appear to have originated in dents or grooves caused by foreign matter being trapped between the diaphragms and the contoured backup flanges. Although stainless steel is not considered to be notch sensitive, these dents thin the material, produce stress concentrations, and unquestionably shorten the service life of the diaphragm. Substitution of 100-mesh screen for the previously used 40-mesh screen alleviated the problem considerably, as evidenced by a marked increase in diaphragm service life. Experimental pumps have been operated with Poroloy filters of 40- and 20-μ rating without apparent loss of efficiency. The use of Poroloy filters is expected to eliminate the possibility of mechanical damage to the diaphragm.[155]

The diaphragm must move smoothly and uniformly from contour to contour to avoid dynamic stresses in excess of the theoretical value for full deflection of the diaphragm into the contour. An instrument was devised[154] to follow the diaphragm of an experimental pump head mechanically and to give a continuous indication of its location. The instrument, shown in Fig. 3.61, consists of an Armco iron armature attached to a diaphragm follower shaft. The armature-shaft assembly is sealed in a tube and spring-loaded to follow the movement of the diaphragm. A differential transformer outside the tube signals the location of the armature to a recorder, which traces a plot of diaphragm location as a function of time. Instruments were located on the head as shown in the upper part of the figure. Static and dynamic calibrations indicated the instruments to be accurate, linear, and capable of responding to the diaphragm action. By recording

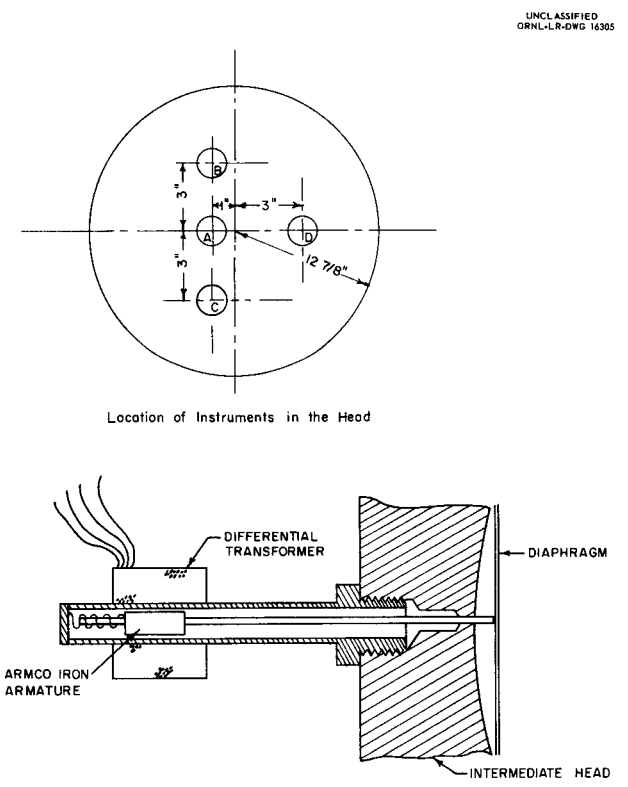

Fig. 3.61. Cross Section of Instrument Installation.

three instruments in a vertical row simultaneously with appropriate time markers, five points on the diaphragm (the three instrument points and the two edges) can be determined at any instant. Diaphragm deflection profiles can be drawn as a function of time from these data.

These instruments were used to investigate the dynamic behavior of the diaphragm to determine an optimum diaphragm thickness, the effect of head hydraulics, and the effect of prime mover. Figures 3.62 and 3.63 show typical deflection profiles at 10 equal time intervals of a complete diaphragm cycle. The left and right dotted curves represent the contour outlines. Travel to the right represents the discharge stroke, and travel to the left represents suction. The three curves in the lower right corner of each figure are the cycle traces for each of the three instruments from which the profiles were constructed. Difference in time scales accounts for the apparent difference in cycle length.

Figure 3.62 for a 0.019-in.-thick diaphragm; Fig. 3.63 is for a 0.031-in.-thick diaphragm. It is readily apparent from the figures that the movement of the thinner diaphragm is unsym-

UNCLASSIFIED
ORNL-LR-DWG 16307

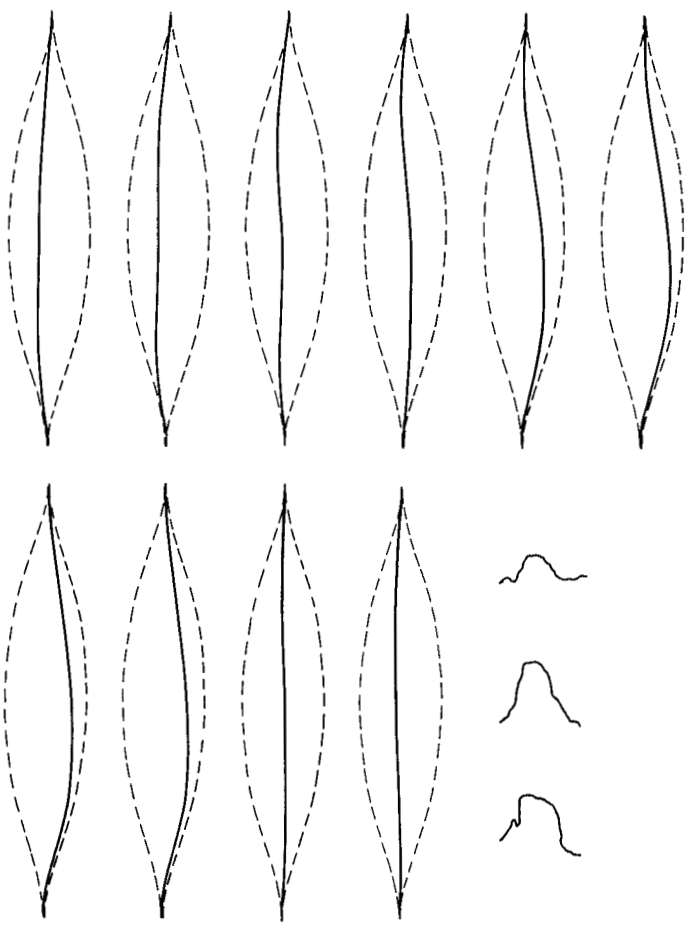

Fig. 3.62. Diaphragm Motion Through One Cycle of a 0.019-in.-Thick Diaphragm of Type 347 Annealed Stainless Steel. Discharge pressure, 2000 psi; stroke volume, 2 in.^{3}; speed, 78 strokes/min.

metrical. Although the theoretical maximum stress due to full deflection of a 0.031-in.-thick diaphragm is about 5000 psi greater than that for a 0.019-in.-thick diaphragm, it appears that, as a result of the peculiar dynamic behavior of the thinner diaphragm, the real stresses are lower in the thicker diaphragm. It has been noted that all diaphragm failures have occurred in the lower portion of the diaphragm, approximately where the sharp changes in curvature were observed. As a result of these observations (which are reported in considerable detail elsewhere[154]), 0.031-in.-thick diaphragms were recommended.

It was also noted that the observed flutter of diaphragms coincided with pressure variations evident in pressure-time traces of the hydraulic drive system. These variations in pressure, being indicative of hammer or standing waves, prompted an investigation of the pressure cycle of the feed-pump system by the use of an electrical analog of the mechanical system.[162] Smoother operation was obtained by modifying the oil-control slide valve to increase the vent time from 0.02 sec to 0.1 sec.[163] Figure 3.64 shows typical pressure vs time traces of the drive unit before and after the slide-valve modification.

Observations of diaphragms which had been seal-welded in pump heads and then cut out, either before or after operation, showed a pronounced "oil can" effect; that is, they were

UNCLASSIFIED
ORNL-LR-DWG 16308

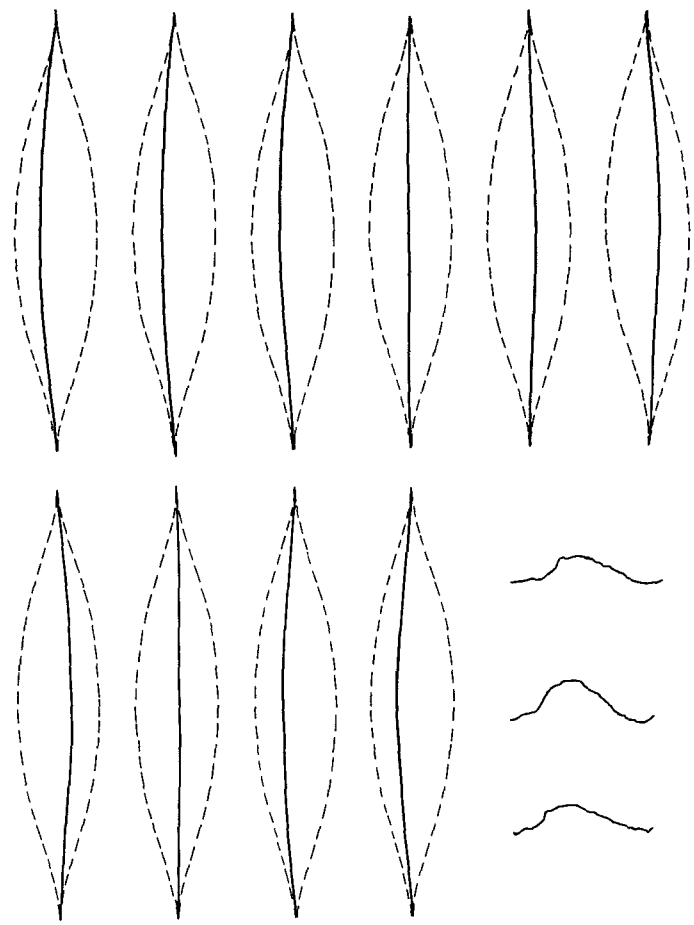

Fig. 3.63. Diaphragm Motion Through One Cycle of a 0.031-in.-Thick, ¼-Hard, Type 347 Stainless Steel Diaphragm. Discharge pressure, 2000 psi; stroke volume, 2.3 in.^{3}; speed, 78 strokes/min.

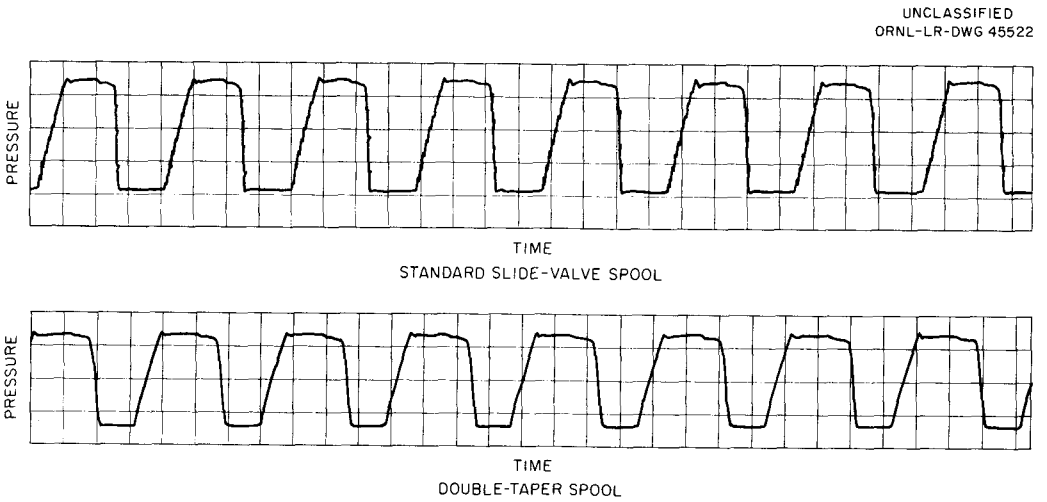

Fig. 3.64. Pressure vs Time Traces from an HRT Feed Pump with a Scott and Williams Drive.

dished about $\frac{1}{8}$ in. deep. A series of test welds were made on mock pump heads to determine if diaphragms are dished in the head assemblies and must "pop through" on each stroke.[164] Strain-gage and deflection measurements on clamped diaphragms both before and after seal welding demonstrated that shrinkage of the seal weld effectively stretches the diaphragm and removes most of the dish.

The effects of corrosion, surface finish, stress level, and degree of cold working on the endurance limit of diaphragm materials were investigated under a subcontract with Ohio State University.[165] Standard sheet specimens were operated in reverse bending in air, distilled water, and fuel solution. A summary of the results is given in Table 3.19. Work hardening improved the endurance of stainless steel in air and in distilled water; however, it decreased the endurance limit in the fuel solution. Although titanium has a very high endurance limit, it is known to be unusually notch-sensitive. A series of tests, not reported in the table, made to determine the effect of scratches on type 347 stainless steel specimens indicated no notch sensitivity; this is contrary to experience with diaphragm failures. The data in the table are largely for comparison and cannot safely be used directly to select a permissible operating stress level.[155]

Corrosion and erosion of check-valve trim was investigated in considerable detail.[166,167] Stainless steel type 17-4 PH was recommended for seat material for use in water service, and Stellite 3 for fuel solution service. Stellite Star J was recommended for check-valve balls for both service environments.[166] It was also found that an initial pretreatment of the check-valve trim materially improved the service life.

Feed-pump heads were operated for 16,300 hr in pump test loops without failure. During this time the diaphragms operated approximately 76 million cycles. Similarly, purge-pump heads were operated 8380 hr in test loops without failure. During this time the diaphragms operated approximately 125 million cycles.[155] Since the purge-pump tests were operated at 250 strokes/min, compared to 77 strokes/min for HRE-2 service, the tests were equivalent to more than three years of normal service. Although these test results seem to indicate that metal diaphragm-pump heads can be made to operate without difficulty for at least two years, experience with these pumps in HRE-2 was not so impressive. A complete tabulation of the operating history of all feed- and purge-pump heads and all check valves in both test loops and HRE-2 during the period 1955 to April 1959 has been reported.[155]

A reduction in pump output is usually the first warning the operator gets of gas binding, check-valve trouble, or changes in phasing of the pump. An investigation[168] of methods for

indirect metering of the flow resulted in the design of a differential temperature device. A metering installation consists of a jacketed section of pipe leading to or from a pump with a thermocouple assembly, as shown in Fig. 3.65, at each end. Differential temperatures across the jacket and corresponding process pipe are transmitted to a recorder, where process flow rates are calculated from the ratio of temperature differentials and the known jacket flow rate.

Table 3.19. Stresses (in psi) at Which Various Materials Will Endure 10^7 Cycles[a]

Material	In Air at Room Temp	In Distilled Water at 60°C	In Fuel Solution at 60°C	Elongation (%)
347 stainless steel				
Annealed	35,000[b]		34,000[c]	42
¼ hardness	58,000[b]	50,000[b]	30,000	14
½ hardness	67,000	57,000	31,000	2.5
¾ hardness	88,000[b]		32,000	2.5
Full hardness			43,000	2.5
316L stainless steel				
¼ hardness			32,000	14[b]
½ hardness			32,500	10[b]
AM-350 SBT[d]	90,000[b]	62,000	39,000	11[b]
Titanium 110 AT	70,000[b]	62,500	62,500	10[b]
CD 4M-Cu[e]			42,000	16

[a]F. H. Beck, *Fatigue and Corrosion Fatigue of Stainless Steel by Uranyl Sulphate,* Engineering Experiment Station, Ohio State University, Columbus, Ohio (Nov. 20, 1959).

[b]Data taken from literature.

[c]More recent, and as yet incomplete, tests indicate an endurance limit of 28,000 psi or less for annealed type 347 stainless steel at 10^8 cycles in fuel solution. This agrees with other corrosion-fatigue work, showing that in a corrosive environment the endurance limit is not asymptotic but continues to decrease with an increase in cycles.

[d]SBT refers to tempering by refrigeration, followed by aging at 650°F.

[e]CD 4M-Cu is a ferritic alloy, developed at Ohio State University, which is hardenable by cold rolling and aging.

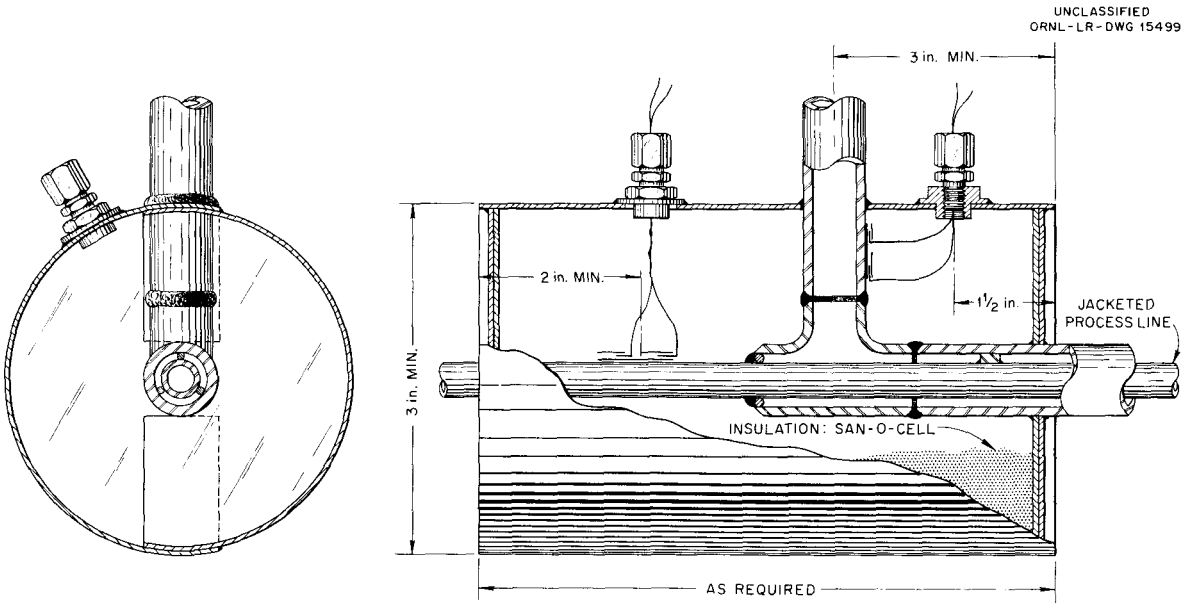

Fig. 3.65. Typical Thermocouple Assembly, Differential-Temperature Flowmeter.

3.8.4 Process-Line Heaters and Coolers

Description. – Concentric-pipe heat exchangers, consisting of jacketed sections of the process lines interconnecting the high- and low-pressure systems, are provided to limit the normal operating temperature of components in some cases, and in other cases to provide heat balance data from which process-fluid flow rates can be inferred. Table 3.20 gives pertinent sizes of the various heaters and coolers discussed herein.

Design Data. – Attempting to cool the fuel and blanket fluids sufficiently to protect the dump valves during a dumping operation is impractical because the heat loads are high. However, dump coolers (items 6 and 33) are provided to lower the temperature of fluids that may normally leak through and damage the dump valves. Uranyl peroxide can precipitate from the fuel solution in the dump and sample lines if the highly radioactive fuel is cooled below 70°C soon after leaving the main circulating stream.[169] In order to ensure that the solution temperature is not reduced below this temperature during reactor operations, the demineralized cooling water circulated to the dump coolers is heated to 160°F (~71°C).

Essentially the entire length of the dump lines is jacketed in order to provide as much heat transfer area as possible. Figure 3.66 shows the construction details of the fuel dump cooler (item 6). Bends are provided in the cooler to limit the stresses arising from thermal expansion to acceptable values. The maximum combined stresses are calculated to be approximately 6400 and 15,000 psi in the fuel and blanket dump coolers respectively.[170] Bellows expansion joints are used to absorb the thermal expansion between the inner pipe and the jacket.

The blanket dump cooler (item 33) is similar to the fuel dump cooler except for pipe sizes and lengths as given in Table 3.20.

The possibility of accelerated corrosion caused by oxygen depletion in stagnant regions like the dump and sample lines was investigated.[171] It was shown that at least 200 to 250 ppm of excess oxygen must be added to the main circulating stream in order to provide corrosion protection in stagnant lines.

Table 3.20. Design Data for Process Heater and Coolers

Unit	Item No.	Inner Pipe Size (in.)	Inner Pipe Size (sched.)	Outer Pipe Size (in.)	Outer Pipe Size (sched.)	Length (ft)
Fuel dump cooler	6	½	80	1	40	15.0
Blanket dump cooler	33	1	80	1½	40	17.5
Fuel sample cooler	24	¼	80	¾	40	32.0
Blanket sample cooler	43	¼	80	¾	40	34.0
Fuel feed cooler	17	1	40	1½	40	27.0
Blanket feed cooler	40	1	40	1½	40	28.0
Fuel purge cooler	68	¼	80	¾	40	14.5
Blanket purge cooler	48	¼	80	¾	40	14.5
FCP purge heater[a]	118	¼	80	¾	80	10.0
BCP purge heater[b]	119	¼	80	¾	80	10.0

[a]Fuel circulating pump.
[b]Blanket circulating pump.

Flow rates of the two-phase mixtures flowing through the dump coolers during a dumping operation must be known to predict the time-varying pressure differential across the core tank. The nature of two-phase flow in mocked dump lines was investigated experimentally.[172] Friction fractors and loss coefficients were measured, and equations were developed which show how these data may be applied to determine the flow rate of a two-phase mixture of steam and water in a pipe.

The fuel and blanket sample lines are also jacketed over their entire length in the manner shown by Fig. 3.66. In addition to protecting the sample valves from high-temperature fluids and preventing uranyl peroxide precipitation, the sample coolers lower the vapor pressure of the sample to about 1 atm to prevent loss of vapor from the sample in the isolation chamber of the sampler. In order that the combined flow rates of the letdown stream and sample lines not exceed the combined output of the feed and purge pumps, a maximum mass flow rate of 300 lb/hr through the sample cooler was recommended.[173] Thirty feet of jacketed section would be necessary to cool the sample stream from 300 to 100°C, using 160°F cooling water. Table 3.20 gives sizes and lengths of the sample coolers; construction details are the same as shown in Fig. 3.66.

Fuel and blanket feed coolers are required to reduce the temperature of the feed streams from their boiling points (at dump-tank pressures) to 50°C upstream from the feed pumps. Corrosion of the check-valve trim is of no particular concern in this temperature range. Since the NPSH of the feed pumps is very low, head losses in the feed coolers were minimized. Design calculations for the fuel feed cooler (item 17) indicated that a jacketed section of 29 ft of 1-in. pipe would be adequate to cool the 810 lb/hr (1.5 gpm) from 100°C to 50°C. The computed head loss was 0.35 ft.[174] Similar calculations[175] showed that a 25-ft length of jacket on a 1-in. pipe would be adequate for the blanket-feed cooler (item 40). Table 3.20 gives the final sizes of the feed coolers. Thermocouple assemblies similar to that shown by Fig. 3.65 were attached to each end of the cooler to provide heat balance data for determining flow rates. Construction details are similar to those in Fig. 3.66, except that bellows expansion joints are not used in the jacket.

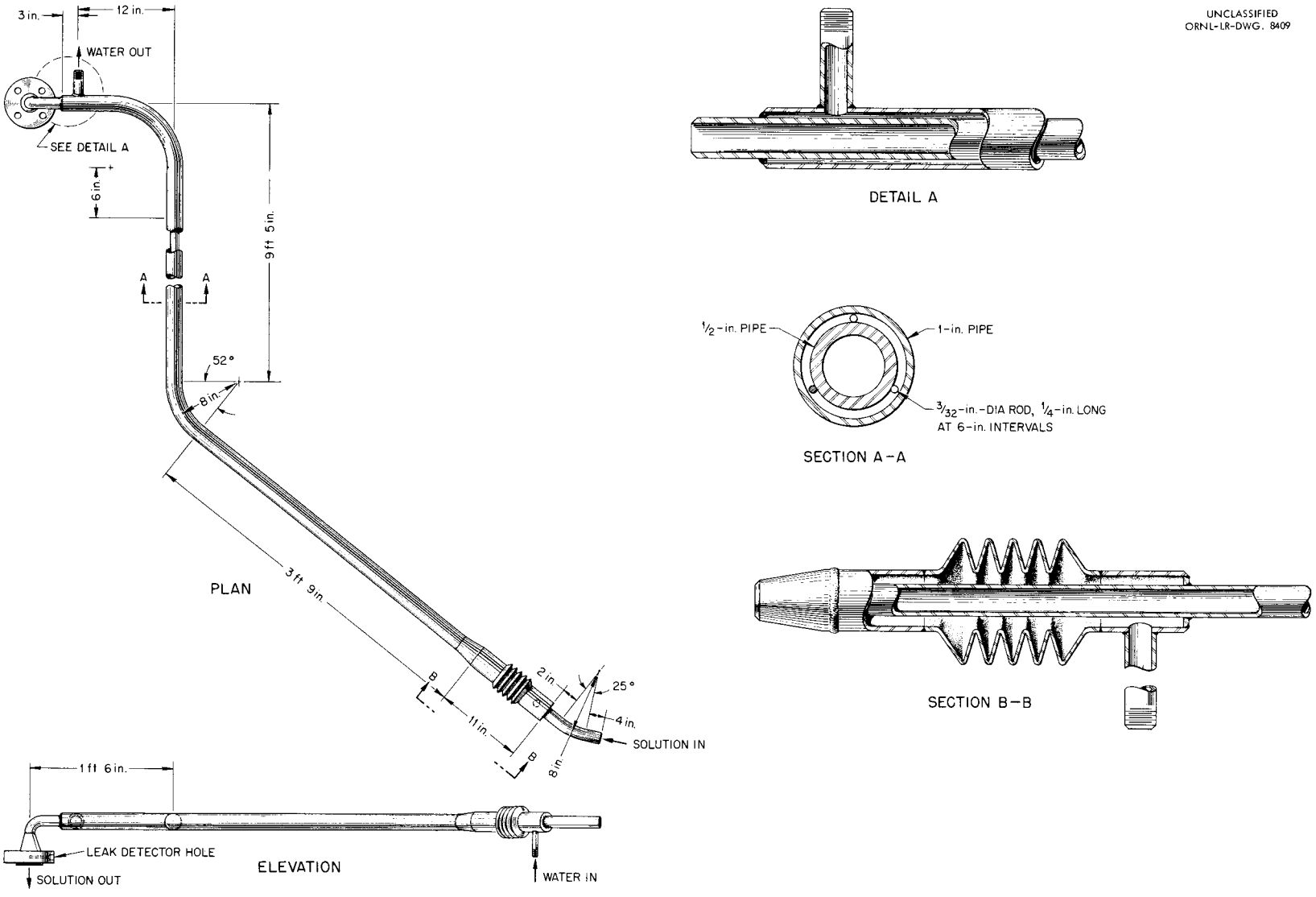

Fig. 3.66. Fuel-Dump Cooler.

Coolers (items 68 and 48) are installed upstream of the purge pumps for the same purposes as described above for the feed coolers. The entire length of the purge line between the condensate storage tank and the pump is jacketed. Table 3.20 gives the sizes and length of the coolers. Provisions are included for obtaining heat balance data, from which the total purge flow may be determined. Coolant water at 90°F is supplied to the coolers in order to obtain differential temperatures of sufficient magnitude to give reliable purge-pump flow rates. The function of the purge-flow heat exchangers (items 118 and 119) is to produce heat balance data from which the purge flow to the circulating pumps can be inferred. These heaters, consisting of 10-ft-long jacketed sections of the purge-water piping, are supplied with 160°F water so that reasonable temperature differentials can be obtained. Since the total purge flow can be inferred from the purge-pump coolers, the purge flow to the pressurizers is found by the difference in total flows and flow to the circulating pumps. Construction details of the purge-pump coolers and the purge-flow heat exchangers are similar to those shown in Fig. 3.66, except that bellows expansion joints are not included in the jackets.

All the heaters and coolers are designed for a primary side pressure of 2000 psi, using 80% of the code allowable stress values for stainless steel type 347. The jacket side is designed for a pressure of 500 psi.

3.9 FUEL AND BLANKET LOW-PRESSURE SYSTEM UNIT ASSEMBLIES

3.9.1 Introduction

In HRE-2, provisions for concentration control, recombination and recovery of radiolytic decomposition gases, production of distilled water, storage of process solutions, and removal of reactor off-gases are available in the low-pressure systems. A unit assembly concept was selected for these systems to facilitate assembly and support of the equipment and to permit preoperational testing of the systems as a whole. Figure 3.67 shows the fuel low-pressure unit assembly; the blanket assembly is identical, except that some components are larger because of the greater blanket system volume.

The unit assembly consists of the following:

1. Fuel dump tanks with attached evaporators, items 7a and b.
2. Entrainment separator, item 7c.
3. Fuel recombiner and iodine bed, item 8a.
4. Fuel recombiner-condenser, item 8.
5. Fuel cold traps, items 9a and 9b.
6. Fuel condensate tank, item 14.
7. Weigh-beam assemblies for determining the dump tank and condensate tank inventories.
8. Valves and piping for interconnecting these units and for external connections at the points of attachment.
9. Framework, pipe anchors, and hangers for supporting the equipment.

A unique feature of the unit assembly is the provision for determining the inventory of the dump tanks and the condensate tank by independent weight measurements. This is accomplished by supporting these tanks on hangers suspended from the ends of weigh beams. There is one weigh-beam

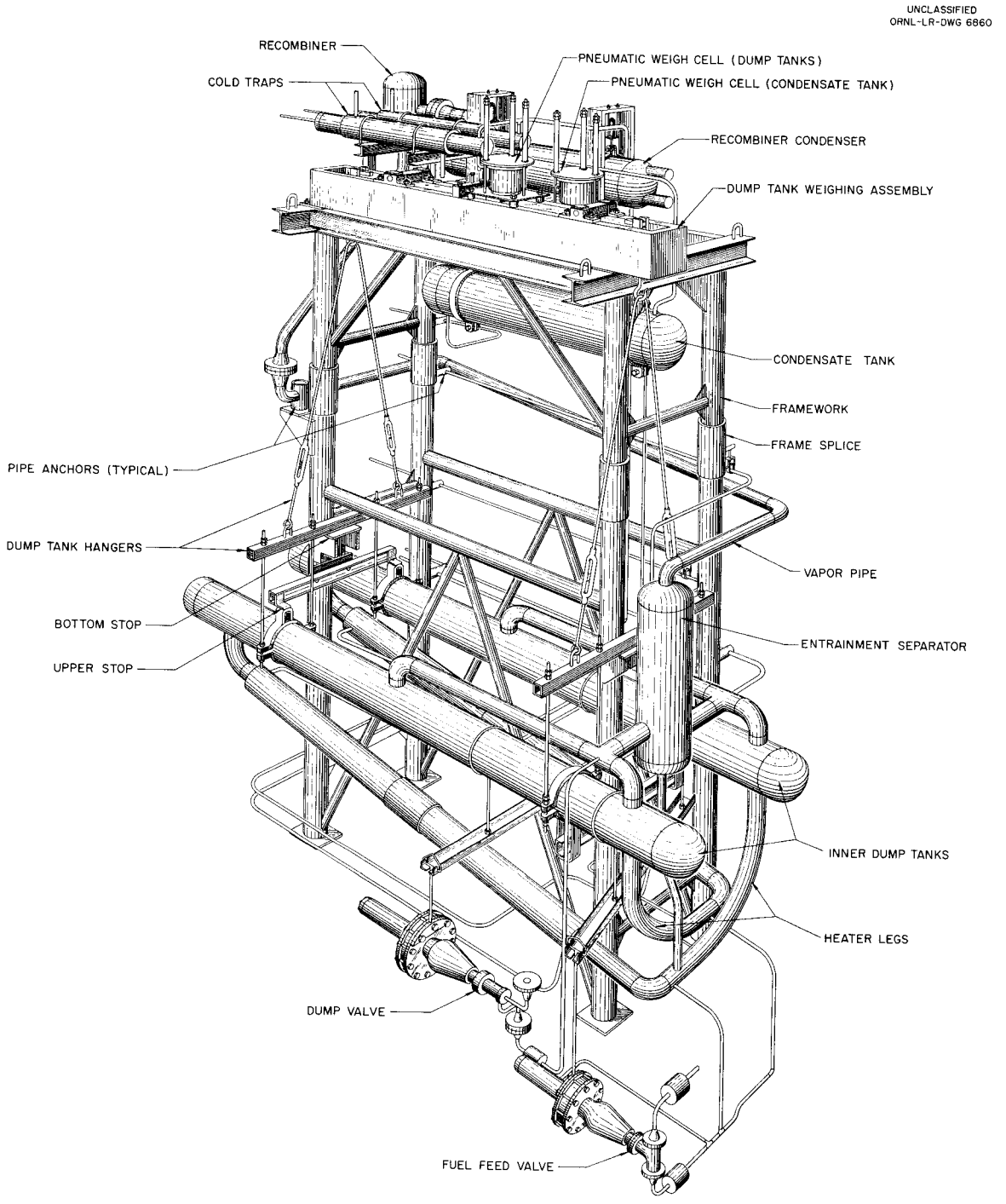

Fig. 3.67. Fuel Low-Pressure Assembly.

assembly for the dump tanks and one for the condensate tank. Each assembly consists of a pneumatic load cell and a box frame, within which a pair of weigh beams are pivoted near their centers on Stellite knife-edge supports. A linkage, also located near the centers of the weigh beams, transmits the resulting force upward against the load cell. Pneumatic signals are transmitted from the load cell to appropriate instrumentation in the control room, where actual load measurements are taken. A schematic diagram of the weighing system is shown in Fig. 8.24; the system is described in Chap. 8.

The geometry of the weighing system was dictated by the need to mount the load cells on top of the assembly, where they could be removed for maintenance. Weigh beams operating against a single load cell (rather than a cell at each end to carry the load directly) were chosen to reduce the number of load cells and associated instrumentation. A dual-cell system would also have required extra instrumentation to sum the output signals from the two cells and would have introduced additional errors. Stellite was chosen for the knife-edge supports because of its hardness and resistance to corrosion. Knife-edge loading was limited to 4000 lb/in., whereas commercial practice allows up to 6000 lb/in.

In order to obtain a reasonably accurate inventory in the weighed tanks, the piping connections to the tanks must be flexible to compensate for the varying loads which result from thermal expansion and movement of the structure. This flexibility is obtained by confining pipe runs to horizontal planes with anchor points on the rigid support structure.[176] Thus the pipe expansions are essentially confined to these planes; and, as a result, vertical thrusts which would enter into the weight measurements are minimized. The 3-in. vapor line connecting the entrainment separator and the recombiner is the most rigid in the system and, in effect, establishes the position of the suspended dump tanks in the horizontal plane. Calculations indicated the total thermal expansion effect to be about 1.0 lb for normal operation.[177] The tare loading, developed by the dead weight of the tanks and any pipeline reactions present, is counter-balanced in the weigh cell by an externally regulated pressure (indicated in Fig. 8.24). Full-load deflection of the cell is less than 0.001 in. The total error, based on live load, was estimated to be ±3.1 lb.[178]

The entire low-pressure system is designed for a pressure of 500 psi at 467°F. Type 347 stainless steel, corresponding to the appropriate ORNL specification,[6] is used throughout as the container material.

3.9.2 Fuel and Blanket Dump Tanks, Evaporators, and Entrainment Separators

Description. – Each of the low-pressure systems consists of two dump tanks (for the fuel and blanket, items 7a and 34a respectively), two evaporators (items 7b and 34b), and an entrainment separator (items 7c and 34c). Since the parts are so closely related, a compact arrangement (shown in Fig. 3.68). was selected for their design. The primary functions of the dump tank, evaporator-entrainment separator subassembly are:

1. To provide storage capacity for fuel and blanket solutions not in the respective high-pressure systems during normal operation. This normally amounts to 125 to 130 liters of solution for each system.
2. To provide storage capacity into which the contents of the respective high-pressure systems can be drained and stored. (Long-term storage is ordinarily carried out in the storage tanks, items 16 and 49.)
3. To provide a means of varying the concentration of solution pumped up to the high-pressure systems.
4. To provide diluent steam to prevent buildup of explosive concentrations of radiolytic gases in the low-pressure systems.[179]
5. To generate very pure distilled water.

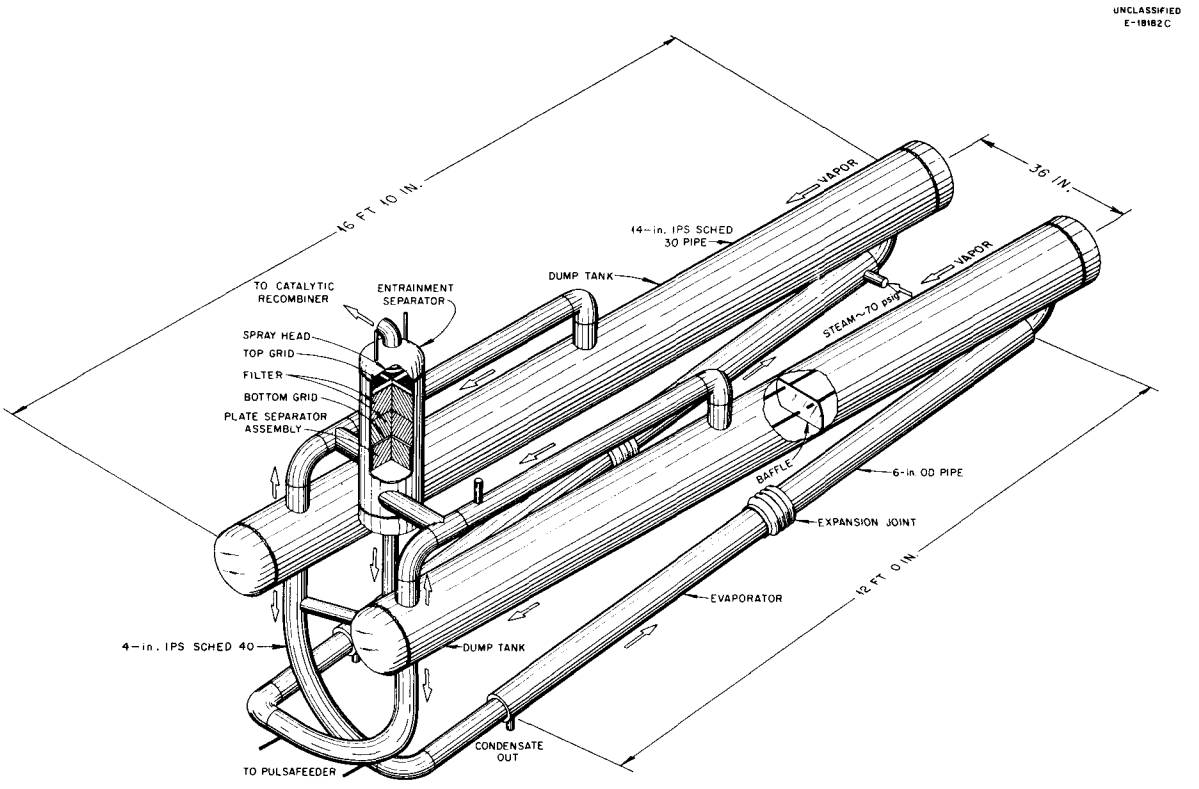

Fig. 3.68. HRT Fuel Dump Tank, Evaporator, and Entrainment Separator.

The fuel dump tanks are fabricated from 14-in. sched-30 type 347 stainless steel pipe and ellipsoidal pipe caps. They are 16 ft 10 in. in overall length. For the blanket dump tanks, 24-in. sched-30 pipe is used; their over-all length is 17 ft. Twenty-mil-thick cadmium sheet is wrapped around the outside of the dump tanks for increased nuclear safety. The centerlines of the two fuel dump tanks are separated a distance of 36 in.; the blanket dump tanks, 42 in. The capacity of the fuel and blanket dump tanks and evaporators is 990 liters and 2880 liters respectively.

Each dump tank has an inclined evaporator, consisting of a 12-ft jacketed section of 4-in. sched-40 pipe, to vaporize the solution and to keep the stored solution well mixed. The evaporators are arranged, as shown in Fig. 3.68, to produce series flow through the two dump tanks. Steam at 70 psig is condensed in the 6-in. steam jacket to evaporate the solution. Internal baffles in the dump tank prevent slugging and excessive liquid entrainment in the vapor stream.

In conjunction with the evaporators, an efficient entrainment separator is required to maintain the purity of the condensate at the highest possible level and to prevent carry-over of uranium. Three modes of entrainment removal are employed in the unit: centrifugal separation, corrugated baffle plates, and woven wire mesh demister elements. The demister elements used for the final stage of separation have a high efficiency for entrainment removal and a very low pressure drop. They are back-washed with condensate from a small condenser coil located in the vapor space above the elements. A baffle plate located above the separator drain line prevents the formation of a vortex.

Design. – The minimum dump tank capacity is established by the solution inventory in the respective high-pressure systems; however, for practical reasons the capacity is increased in order to limit the magnitude of the pressure rise following a dumping operation. An additional

requirement that the blanket dump tank capacity be sufficient to contain the fuel and blanket inventories were imposed. High-pressure system inventories are reported[180–182] in Table 3.21. A tabulation of line lengths, areas, and volumes in the low-pressure systems is also available.[183]

A study of dump-tank criticality, startup and shutdown operation, and operation over a wide range of temperatures recommended 14-in.-diam horizontal fuel dump tanks.[184] It was shown that for certain phases of operation, as much as 18.7 kg of U^{235} and 680 kg of D_2O would be desirable in the dump tanks.[185] Criticality studies for long cylinders, reflected by H_2O (corresponding to the cell being flooded for maintenance) and moderated with various mixtures of H_2O and D_2O, indicated a minimum critical linear concentration for each H_2O-D_2O mixture.[186] For pipe diameters under 18 in., the minimum critical linear concentration exceeds 0.50 kg/ft for all mixtures. Thus to store 18.7 kg of fuel, a minimum of 37 ft of pipe is required. The diameter of the pipe, not to exceed 18 in., is then determined by the required dump tank volume. Assuming the stored solution should occupy about two-thirds of the available space, the required dump tank volume was estimated to be about 1000 liters. Two 14-in. sched-30 pipes, each 16 ft 10 in. long, were selected for the dump tanks. Volume calibrations of the dump tanks indicated an actual volume of 990 liters, of which 100 liters is in the evaporators.[187]

In a similar study of the blanket dump tank requirements 24-in.-diam pipes[185] were recommended. Based on the blanket containing 633 g of thorium per kg of D_2O, it was estimated that 18.7 kg of U^{235} would be necessary for operation at 300°C. Assuming dump tanks of the same length as the fuel dump tanks, that is, about 34 ft, the linear concentration is computed to be about 0.55 kg/ft. It was shown that a 24-in.-diam cadmium-coated cylinder would be safe up to linear concentrations of 0.70 kg/ft. Two 24-in. sched-30 pipes, each 17 ft long, were selected for the blanket dump tanks. Thus the blanket dump tank volume was established as 2880 liters (as built), of which 100 liters is in the evaporator legs. Cadmium sheet, 0.020 in. in thickness, was specified for both sets of dump tanks to prevent reentry of thermal neutrons. Further discussion of dump tank criticality is presented in Chap. 6.

Table 3.21. Normal Holdup in High-Pressure Systems

	Volume (liters)
Fuel system	
Core tank	290
Pressurizer	33
Heat exchanger	55
Circulating pump	13
Piping	100
Normal operating volume	491
Blanket system	
Reactor vessel (net)	1560
Pressurizer	33
Heat exchanger	55
Circulating pump	10
Piping	92
Normal operating volume	1750

The fuel dump system was studied to establish an upper limit on dump tank pressure, minimum dump time, and allowable length of dump line as a function of line size.[188] Assuming an adiabatic expansion of the fuel high-pressure system contents through a frictionless pipe, the maximum fuel dump tank pressure was estimated to be 650 psi. Later unreported calculations[189] considered the effects of dump line flow rate, dump tank pressure, heat transfer to the walls of the dump tank, and heat removal by the recombiner-condenser as functions of time. On the basis of these stepwise calculations, the maximum pressure was estimated to be about 160 and 290 psi for the fuel and blanket dump tanks respectively.

The dump tank evaporators supply diluent steam for the recombiner gases, concentrate the solutions, and mix the stored solutions. Inclined, jacketed-pipe evaporators were selected for simplicity and their "eversafe" geometry for concentrated fuel solutions. Each set of dump tanks has two evaporators, each consisting of a 12-ft jacketed section of 4-in. sched-40 pipe arranged as shown in Fig. 3.68. Design data[190,191] for each evaporator are given in Table 3.22. The blanket dump tank evaporators are identical to those on the fuel dump tanks.

An entrainment separator is required to remove moisture and solids from the steam-gas mixture entering the catalytic recombiner. The requirement that the separator function satisfactorily during a dump operation, when the steam-gas mixture flow rate is several times that during normal operation, necessitated a very efficient design. It was desired to reduce the solids content to less than 1 ppm in the exit stream from the separator. A design study[192] of various means of achieving the desired separator characteristics resulted in the design shown in Fig. 3.69 and was based on design data given in Table 3.23.

Most of the entrainment is removed by the rotational flow imparted by the tangential inlets and by a section of corrugated baffles. Final separation is accomplished by coarse and fine

Table 3.22. Dump Tank Evaporator Design Data

Evaporation rate, gpm	0.5
Evaporation pressure, psia	14.7
Evaporation temperature, °F	212
Jacket steam pressure, psig	75
Jacket steam temperature, °F	320
Heat balance	
Evaporation rate, lb/hr	264
Heat rate, Btu/hr	2.76×10^5
Heat transfer coefficients, Btu hr^{-1} ft^{-2} $(°F)^{-1}$	
Steam side	1500
Wall	520
Boiling side	$2.3\ (\Delta T_B)^2$
Overall	300
Heat transfer area, ft^2	
Required	8.5
Actual	12.5
Heat flux, Btu hr^{-1} ft^{-2}	22,000
Recirculation ratio, (lb of solution per hr/lb of vapor per hr)	176

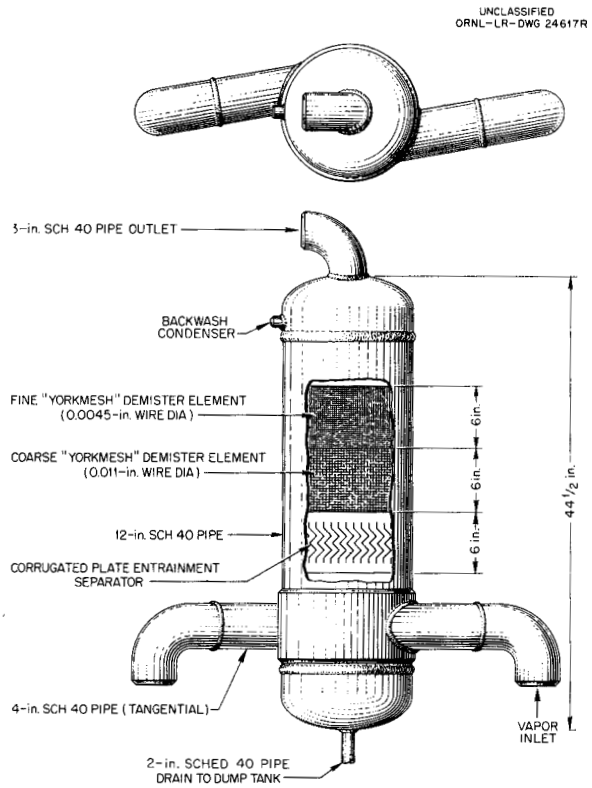

Fig. 3.69. HRT Entrainment Separator.

Table 3.23. Entrainment Separator Design Data

Vapor composition, %	
D_2	10
O_2	5
D_2O	85
Vapor flow rate, lb/min	
Minimum	4.94
Normal	9.88
Maximum (at dump)	28
Entrainment in inlet stream	variable
Entrainment in exit stream, maximum, ppm	1
Minimum particle size, μ	25
Maximum particle size, μ	1000
Superficial velocity for normal operation, ft/sec	5.25
Pressure drop, in D_2O at 212°F	
at minimum flow rate	0.36
at normal flow rate	1.30
at maximum flow rate	80
Design pressure, psi	500
Design temperature, °F	467

demister elements. Figure 3.70 shows the computed pressure drop as a function of flow rate for each stage of separation. Empirical correlations[193] were used to estimate the pressure drop across the demister elements.

A small condenser coil consisting of 12 ft of $\frac{3}{8}$-in.-OD by 0.065-in.-thick wall tubing was built into the vapor space above the demister elements to provide small amounts of condensate for backwashing the elements.

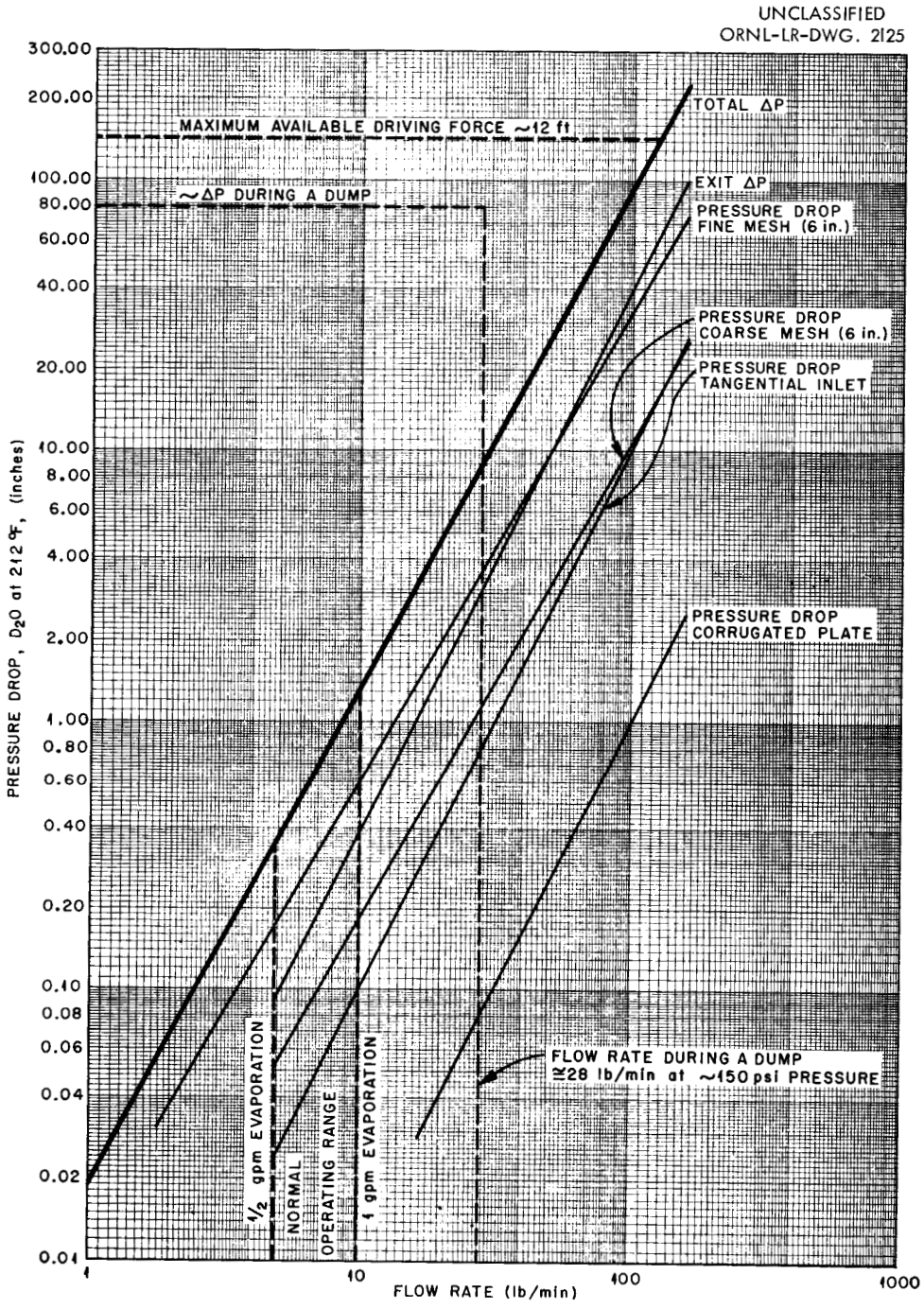

Fig. 3.70. Pressure Drop Through HRT Entrainment Separator.

Related Development. – Test loops were operated to develop data for use in designing the dump tanks, evaporators, and entrainment separators and for use in verifying the adequacy of the components as designed. In order to predict the pressure rise in the dump tank following a dumping operation, a knowledge of time variation of the mass flow rate in the dump line is necessary. The nature of two-phase flow in mocked dump lines was investigated experimentally.[172] Friction factors and loss coefficients were measured, and equations were developed for predicting the mass flow rate into the dump tank. These experimental correlations were used to analyze data developed in a dump test facility[194,195] and to predict the pressure rise in the dump tank.[189]

Performance of the dump tank evaporator was tested. The evaporation rates agreed closely with the computed values,[196] and visual observations confirmed that mixing in the dump tank was good. Subsequent operation of the test facility with an entrainment separator suggested some design modifications to obtain smoother operation and to lower entrainment in the stream entering the separator.[197] In particular, baffles were suggested to dampen waves and vibrations and to prevent slugging. A second vapor exit, located at about the midpoint of the dump tank, was also recommended to lower entrainment in the vapor stream to the separator. Velocities measured in the cold leg and the evaporator section confirmed the earlier observations that mixing was adequate. The cold-leg-liquid velocity measurements indicated flow rates of 36 and 79 gpm through the dump tank for evaporation rates of 0.5 and 1.0 gpm respectively. For an evaporation rate of 0.5 gpm, the entrainment leaving the separator was 7×10^{-4} gpm with the demister elements removed, less than 5×10^{-5} gpm with 6-in. thicknesses of coarse and fine demisters, and less than 2×10^{-5} gpm with 12-in. thicknesses of coarse and fine demisters. A 6-in. thickness for each of the demister elements was recommended for the separator.

Simulated dump tests were performed to evaluate separator efficiency during a dump operation.[198] Analysis of the data indicated entrainment separation efficiencies in the range of 99.75 to 99.97%. Subsequent examination of the demister elements showed that they had been extruded about 1 in. upward in the separator. A heavy wire screen was provided to prevent this occurrence in the reactor entrainment separators.

3.9.3 Fuel Iodine Removal Bed

Description. – An iodine removal bed was installed upstream from the fuel recombiner to prevent poisoning of the platinum recombination catalyst by iodine. For simplicity, the iodine removal bed and the recombiner were fabricated as a single component (item 8a); however, each will be discussed separately. An iodine removal bed was not provided for the blanket system, since in the original mode of operation the presence of fission products in the system was not contemplated.

In addition to removing essentially all the iodine from the entering gas-steam mixture, the bed is also expected to lower the xenon concentration in the reactor system. Because I^{135}, the precursor of Xe^{135}, will be held on the bed until it decays, xenon thus formed can be returned to the high-pressure system only via the condensate. Based on a distribution coefficient of 13.4 for xenon at 65°C, 93% of the xenon entering the recombiner-condenser will pass to the off-gas system. The Xe^{135} poison level in HRE-2 was estimated[199] to be about 2% with an oxygen injection rate of 500 cc/min (STP) and no gas letdown; the addition of the iodine removal bed was calculated to reduce the poisoning to 0.6% under the same conditions.[200]

A schematic drawing of the combined iodine removal bed–recombiner unit used in the fuel system is shown by Fig. 3.71. As first conceived, the iodine removal bed consisted of a packed bed of silvered alundum Raschig rings, through which the steam-gas mixture passed before entering the recombiner catalyst bed.[200] During the preoperational testing of the HRE-2, it was discovered that sodium ions were being leached from the alumina.[201] At this point the silvered alundum was replaced with silvered wire mesh.

The adsorber bed, 1 ft in diameter and 3 ft in length, was packed with 70 lb (density of 29 lb/ft^3) of silvered Yorkmesh. Type 304 stainless steel wire of 0.011-in. diameter was specified

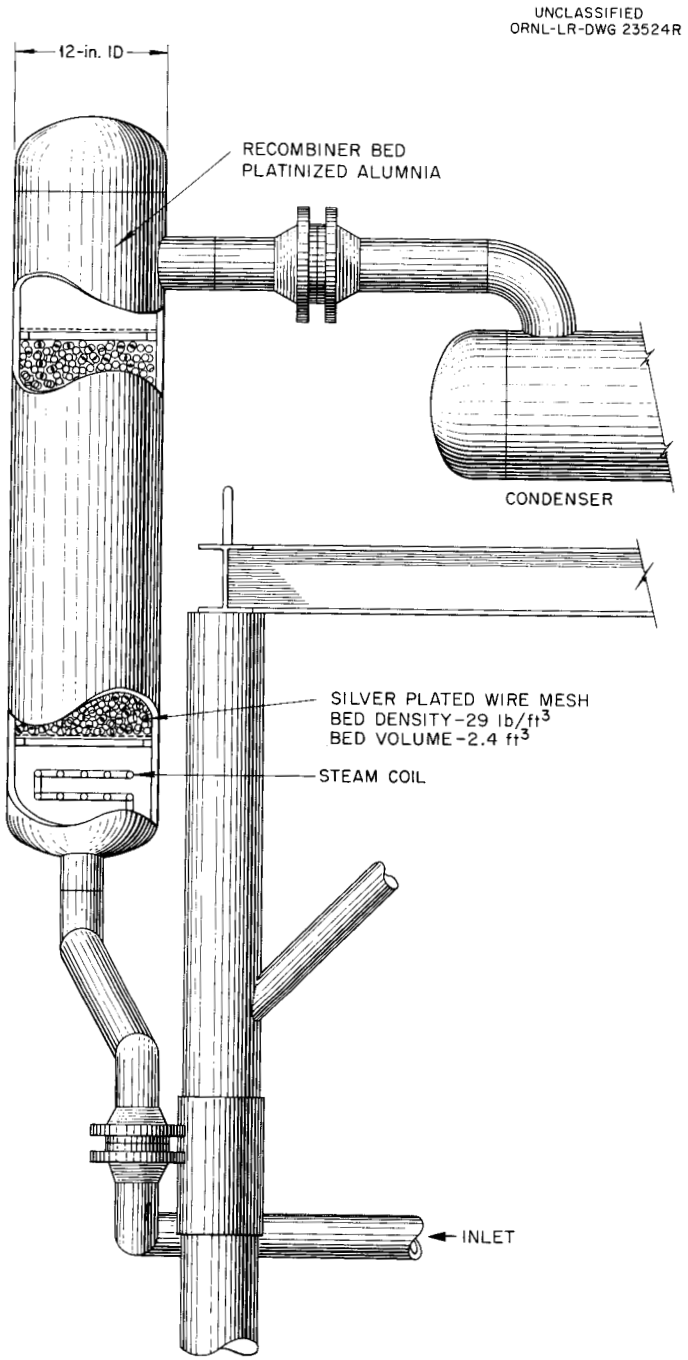

Fig. 3.71. HRT Iodine Removal Bed.

for the silver supporting material. The steam-gas mixture is dried by a steam coil before entering the adsorber bed. During reactor operation the bed is cooled by the mixture as it passes through. During reactor shutdown, when there is no flow through the bed, decay heat will produce temperatures in excess of that required to decompose silver iodide on the bed unless external cooling is provided for several hours. This is accomplished with two cooling jackets; one embedded in the packed bed, the other external to the container vessel. The container vessel is constructed of 12-in. sched-40 type 347 stainless steel pipe and pipe caps. Overall length of the entire unit is about 5 ft 4 in. Inlet and exit nozzles are 4-in. sched-40 pipes.

Defining the effective life as that time during which the bed removes over 98% of the iodine in the entering stream, bed lives between 1200 and 19,000 hr were estimated for the Yorkmesh.[202] The minimum bed life is based on the assumption that xenon is not desorbed as it is produced by decay of the iodine. The maximum bed life assumes desorption of xenon so that a new adsorption site becomes available. The actual effective life probably lies between the two extremes.

Design. – An extensive design study[200] was undertaken to devise a means of preventing fission product iodine from poisoning the catalyst in the recombiner. Ideally, an iodine removal system would have sufficient capacity to hold all the iodine until it decays to xenon, at which time the xenon would be desorbed and a new reaction site would become available. Since I^{127} is stable and I^{129} has a half life of about 1.7×10^7 yr, this ideal system cannot be realized. However, a practical system can be designed to last a significant portion of the life of a reactor.

The equilibrium heat production rate in the iodine bed was estimated as 21,000 Btu/hr, of which the major portion is the result of beta decay. This amount of heat will raise the temperature of the steam-gas mixture about 90°F, thus enhancing recombination in the recombiner. The thermal conductivity of the mesh was measured as 0.2 Btu hr^{-1} ft^{-1} $(°F)^{-1}$ in a bed packed to a density of 24.7 lb/ft^3. To prevent thermal decomposition of silver iodide, steam flow through the bed was recommended for at least 2 hr following a dump to help remove decay heat.[202] After this period the built-in cooling systems would be capable of removing the decay heat. A study of the allowable pressure drop across the bed recommended a maximum value of 0.2 psi for a dump tank evaporation rate of 8 lb/min at atmospheric pressure.[203]

In the original study it was assumed that 1.29×10^{-5} g/mole of I_2 could be adsorbed per square foot of surface area in the bed. This allowed a safety factor of at least 10 over what was estimated to be the true saturation value. In computing the expected life of the silvered Yorkmesh adsorber bed, an iodine concentration of 11.2 mg/g of bed was assumed.[202]

Related Development. – A series of tests was conducted in the HRE-2 core mockup system to evaluate the relative effectiveness of iodine removal beds which use silvered alumdum pellets and silvered Yorkmesh.[204] In these tests iodine adsorption in the beds was found to decrease exponentially with bed depth as shown in Fig. 3.72. In the range of 110 to 150°C, the effectiveness of silvered alundum pellets (5-in. bed depth) appeared to depend strongly on temperature, ranging from 63% at 110°C to 98% at 150°C. Later tests on silvered Yorkmesh did not indicate a temperature effect in the range of 106°C to 139°C.[205] It was also found in this temperature range that the rate of iodine pickup decreased 10-fold after about 2% of the silver reacted. On the basis of the mockup tests, it was concluded that silvered Yorkmesh was superior to silvered alundum pellets for a given bed volume. Metallographic examination of silvered Yorkmesh specimens taken from the iodine removal test unit indicated that this material was adequate for use in the intended service.[206]

3.9.4 Fuel and Blanket Recombiners

Description. – For safety as well as economic reasons, it is desirable to recombine the D_2 and O_2 which are formed by the decomposition of water in the reactor process fluids.[85] In HRE-2 a solution catalyst, $CuSO_4$, is added to the uranyl sulfate solution in sufficient quantity to recombine all the decomposition gases produced at design conditions of 300°C and 2000 psi.

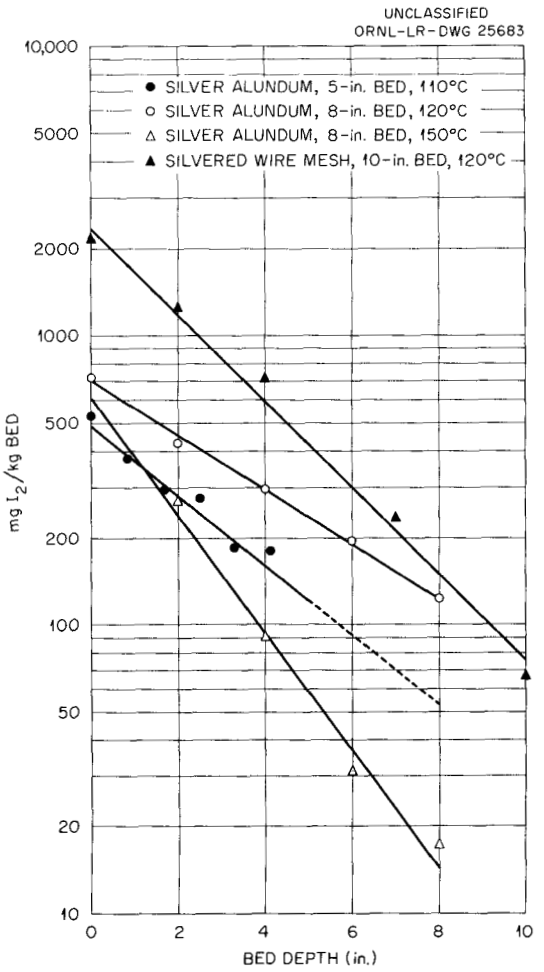

Fig. 3.72. Iodine Distribution in Silvered Bed.

Since the reaction rate constant for the solution catalyst is strongly dependent on temperature, the catalyst concentration may not be sufficient to recombine all the gas produced at lower operating temperatures.[207] A catalytic recombiner is installed in the low-pressure system to supplement solution recombination, to recombine dissolved gases in the letdown stream during normal operation, and to recombine dissolved gases released from the fuel solution following a dump.

The fuel recombiner and iodine bed (item 8a) are shown by Fig. 3.71; the blanket recombiner (item 35a) is shown by Fig. 3.73. The recombiner-condenser shown in the figure will be discussed later. Although no internal details are shown in the fuel recombiner figure, they are identical to the internals shown in Fig. 3.73.

The design of the primary recombiner[208] was based on experimental measurements of space velocity. (Space velocity is defined as the cubic feet of gas fed (STP) per cubic foot of catalyst per hour.) A large safety factor was included in the bed volume in order to ensure sufficient catalyst surface area for all likely operating conditions. An annular bed, 2.5 in. thick and 11.5 in. long, was selected to reduce the pressure drop through the bed and to prevent gas channeling.

The 9.25-in.-OD bed is arranged inside a 12-in. sched-40 pipe section to give radial flow of the gases. Right cylinders (0.125-in. by 0.125-in.) of 0.3 w/o platinized alundum pellets are used in the packet bed. A steam coil, embedded near the inner surface of the bed, utilizes 250 psig steam to dry a portion of the bed sufficiently to cause ignition following periods of reactor shutdown. The reaction on the pellets in the vicinity of the steam coil will quickly dry the remainder of the bed.

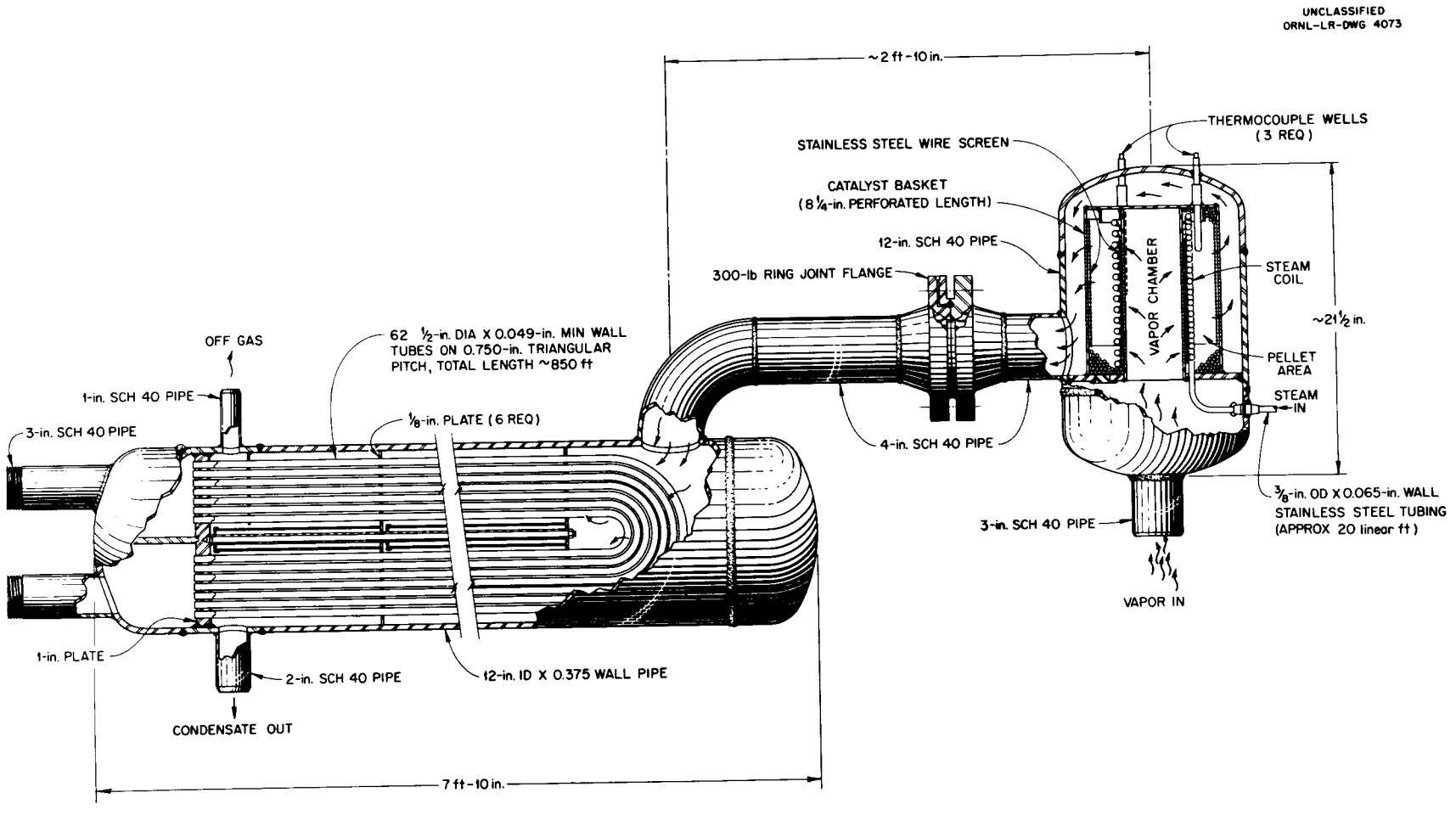

Fig. 3.73. Assembly of HRT Recombiner and Condenser.

At design conditions the gas flow rate through the fuel recombiner is about 0.48 lb mole/min (560 lb/hr) of which 8.1 mole % is decomposition gases. Assuming 100% recombination the temperature of the exit gas is about 400°C. With the maximum output of D_2O vapor from the 1 gpm evaporator, the flow of D_2 and O_2 can be doubled without exceeding the explosive limits of the gas-vapor mixture. Under these conditions the temperature of the D_2O vapor leaving the recombiner is about 700°C. Since the pellets can be used at temperatures up to 1200°C without loss of platinum, no difficulty is anticipated from overheating. Three thermocouple wells are placed in the catalyst bed to indicate the bed temperature during operation. The pressure drop across the bed is about 0.2 psi for normal operation.

A later investigation recommended that gaseous letdown from the high-pressure system be eliminated in order to ensure an excess of oxygen in the fuel solution.[199] For these conditions the decomposition gases constitute about 0.8 mole % of gas mixture entering the recombiner, instead of the original design composition of 8.1 mole %.[209] Tests of the primary recombiners indicated satisfactory performance of the units at design conditions; however at low gas concentrations small amounts of the decomposition gases would pass through the bed without being recombined.[210] This was attributed to the fact that the bed, being very large for the amount of gas being recombined, was not heated sufficiently to cause complete recombination.[209]

To ensure complete recombination under these conditions, small secondary recombiners (items 27 and 113) are included downstream from the recombiner-condensers. Since the off-gas stream from the recombiner-condenser is not diluted with large amounts of steam, the temperature of the secondary recombiner catalyst is sufficiently high to cause complete recombination.

The secondary recombiner, shown in Fig. 3.74, consists of a roll of platinized stainless steel wire mesh about 1.75 in. in diameter and 4 in. long. The platinized mesh is simply placed inside

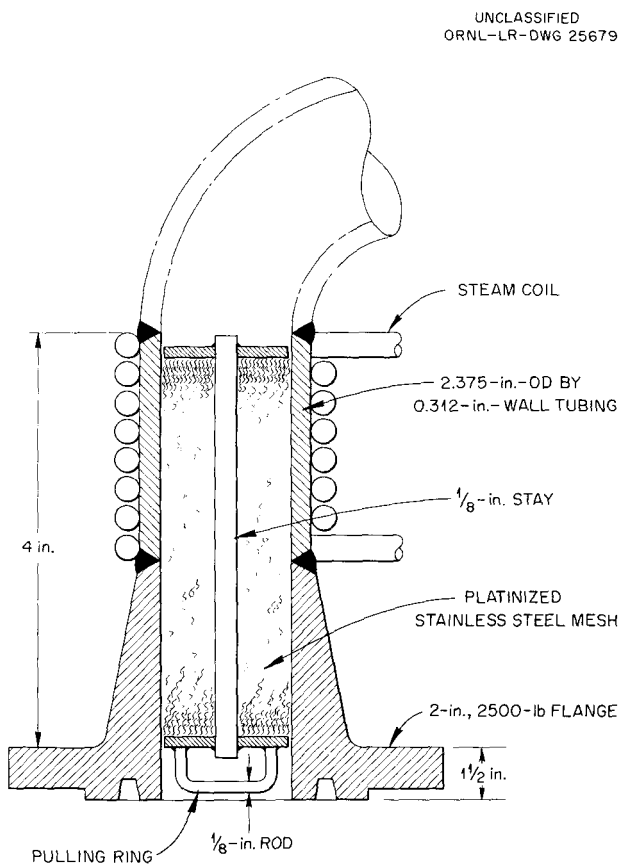

Fig. 3.74. Supplementary Recombiners for HRT.

the off-gas piping as shown in the figure. A steam coil, using 250 psig steam, is wrapped around the pipe to heat the unit sufficiently to initiate the reaction.

Design Data. – The primary recombiners were designed on the basis of the data presented in Table 3.24.

The controlling mechanisms for catalytic reaction rates are outlined in ref 211. Most of the work on recombination within the homogeneous reactor project has been in the temperature range controlled by diffusion, that is, 250 to 500°C. Little work has been done outside of these temperature limits, at space velocities greater than 1.7×10^6 hr^{-1}, and at very low hydrogen concentrations.[212–216]

Assuming a space velocity of 400,000 hr^{-1} for 100% recombination and the conditions stated in Table 3.24, the required catalyst volume was determined to be 0.025 ft^3. However, a bed volume of 0.353 ft^3 was recommended on the basis of providing sufficient bed thickness to prevent channelling and minimizing pressure drop. Calculations showed that an annular bed offered considerably less pressure drop for a given bed thickness than the other bed types studied.[208] For design conditions the temperature rise of the gas-steam mixture while passing through the bed was computed to be 306°C; for maximum conditions it was computed to be about 600°C. Figure 3.75 shows estimated temperature profiles for the gas and pellets in the recombiner, based on an assumed homogeneous bed. As such the temperatures are approximate and give only an indication of the magnitudes of the true values.

Related Development. – The fuel and blanket primary recombiners were tested to determine recombination efficiencies at low gas concertrations and low diluent steam flows.[210] The data are summarized in Table 3.25. At high stoichiometric gas concentrations, recombiner efficiency was 100%. At low concentrations, as much as 50 cc/min of hydrogen passed through the units without being recombined. A model of the secondary recombiner was shown to raise the overall efficiency to virtually 100%.

The possibility of the secondary recombiner overheating was investigated by passing a mixture of 500 cc/min of hydrogen and 750 cc/min of oxygen through the bed. The reaction was complete; however, 100 psig steam in the heating coil was required to initiate the reaction.[209] Once the reaction was started no further steam was required. With the steam supply shut off, the temperature of the recombiner rose only 15 to 20°F. Thus it was concluded that the small unit could effectively dissipate the heat of recombination without overheating.

3.9.5 Fuel and Blanket Recombiner-Condensers

Description. – During normal operation the recombiner-condenser cools the superheated gas-steam mixture from the recombiner, condenses the D_2O vapor in the mixture, and subcools the condensate. Following a dumping operation the condenser is used to lower the dump tank pressure

Table 3.24. Design Data for Primary Recombiner

Core power level, kw	1200
D_2 gas released in core, lb mole/min	0.026
O_2 gas released in core, lb mole/min	0.013
D_2O diluent from evaporator, lb mole/min	0.442
Space velocity in bed, hr^{-1}	400,000
Pressure drop for normal operation, psi	0.2
Design pressure, psi	500
Design temperature, °F	800

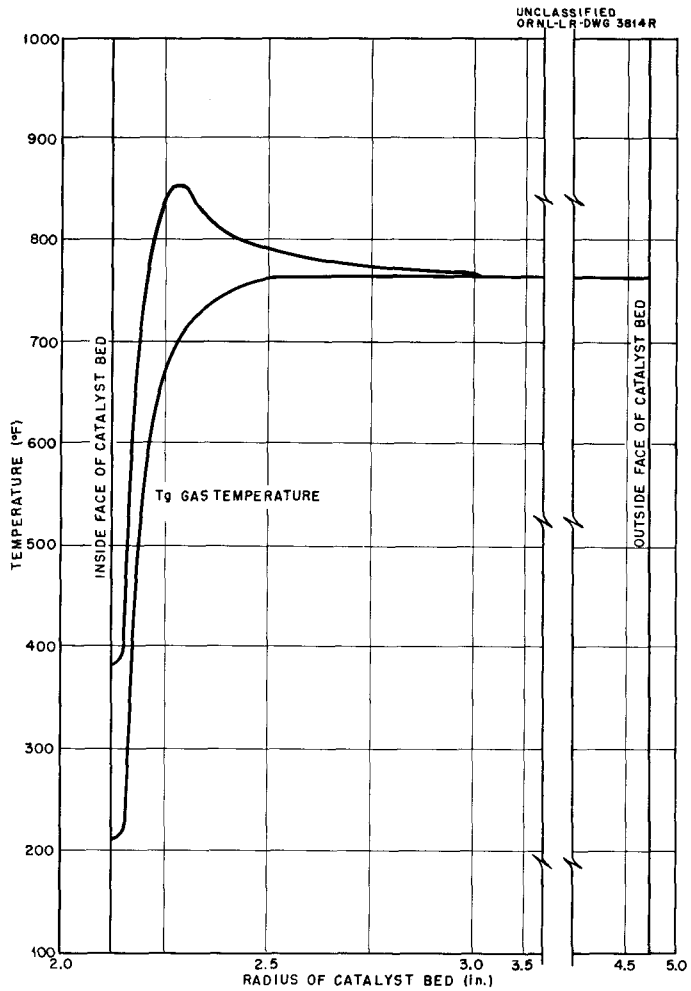

Fig. 3.75. Temperature Profile of Catalyst Pellets and Gas in Recombiner.

by condensing the large quantities of vapor which flash as the contents of the high-pressure system are released to the dump tanks. The latter function imposes a high-heat load on the condenser, since it is desirable to lower the pressure as quickly as possible after a dump. The fuel and blanket system condensers (items 8 and 35 respectively) are identical and were purchased according to ORNL Specification HRT-1008.[6] Details of the condenser units are shown in Fig. 3.73.

At normal operating conditions demineralized cooling water at 100°F is circulated through 62 0.500 in. OD × 0.049 in. thick tubes to desuperheat, condense, and subcool the steam-gas mixture on the shell side.[208] The U-tubes (13-ft average length) are equally spaced on a 0.750-in. triangular pitch inside a 12-in. sched-40 pipe. Baffles are provided to produce cross flow over the outside of the tubes.

Vapor is condensed on the shell side mainly because of a higher overall heat transfer coefficient, that is, $U = 340$ Btu hr^{-1} ft^{-2} $(°F)^{-1}$ compared to $U = 244$ Btu hr^{-1} ft^{-2} $(°F)^{-1}$ for D_2O condensing inside the tubes. Thermal stress problems are also alleviated by the addition of the high temperature steam-gas mixture to the shell side. Shell side pressure drop is negligible (approximately 0.03 psi) for normal operation. The cooling water flow through the tubes is automatically increased from 15 gpm to 80 and 150 gpm, respectively, for the fuel and blanket condensers during a dump. Since the condensers are primarily condensing vapors, their capacities are greatly increased by the increased coolant flows.

Table 3.25. Test of HRT Recombiners

Entering Stream				Exit Stream			
				Hydrogen			
Steam Flow (lb/hr)	Stoichiometric Gas Concentration (%)	Excess Oxygen (%)[a]	Excess Oxygen (cc/min)	Concentration (%)	Flow (cc/min)	Temperature (°F)	Recombination Efficiency
Blanket-System Recombiner							
120	0.08	105	300	0.6	2	250	99.7
120	0.80	25	700	6.8	48	260	99.2
120	0.80	25	710	3.0	22	265	99.6
120	0.80	55	1,575	3.4	54	260	99.1
200	8.0	20	9,900	0.0	0	635	100.0
300	8.0	63	49,300	0.0	0	690	100.0
Fuel-System Recombiner							
120	0.08	110	300	1.0	3	230	99.5
120	0.80	15	450	7.2	32	260	99.5
300	8.0	60	48,100	0.0	0	670	100.0

[a]Based on quantity of stoichiometric gas.

Design Data. – Detailed design calculations of the recombiner-condenser have been reported.[208] ORNL Specification HRT-1008[6] presents design data, material specifications, fabrication details, and inspection and testing requirements for the condenser. The design data are summarized in Table 3.26.

In calculating the surface area requirements the condenser was divided into a desuperheating section, a condensing section, and a cooling section. The minimum surface area was increased 25% to compensate for the condenser being partially flooded during a dump operation. The performance of the condensers during a dump operation was thoroughly investigated,[208] based on the design data presented in Table 3.27. Calculations showed that there was no danger that the cooling water would boil. It was estimated that about 22% of the condenser would become flooded during a dump as a result of the relatively large pressure drop between the condenser and the dump tank. These calculations indicated maximum pressures of 60 and 140 psi in the fuel and blanket dump tanks respectively. Later calculations based on experimental data of line restrictions indicated the blanket dump tank pressure might be as high as 240 psi.[217,218]

3.9.6 Fuel and Blanket Cold Traps

Description. – Cold traps are required in HRE-2 fission product off-gas lines to conserve D_2O and to lower the vapor pressure of the water in the off-gas stream thus increasing gas adsorption in the charcoal beds. Two cold traps, similar to that shown by Fig. 3.76, are provided in each of the low-pressure systems. The cold traps are designed to alternate on a 24-hr freeze-thaw cycle, with one of the two always being in service.[219]

A cold trap consists of a double-pipe heat exchanger about 6.5 ft in length. The inner pipe is 4-in. sched-40 and the outer pipe is 6-in. sched-40. Stainless steel type 347 is the material of construction. Saturated off-gas at about 130°F enters the inner pipe and is cooled to −30°F by a counter-current flow of chilled Amsco through the annulus. Baffles are provided in the inner pipe to promote mixing.

During the defrost cycle warm Amsco is circulated through the annulus to melt and recover the D_2O ice collected on the inner wall. The units are slightly inclined to ensure drainage. The

Table 3.26. Recombiner-Condenser Design Data

	Tube Side		Shell Side
Fluid circulated	Demineralized water		Steam and water
Circulation rate, lb/min	667		9.36
Fluid properties at °F	100	120	760
Density, lb/ft^3	61.9	61.7	0.022
Viscosity, $lb\ hr^{-1}\ ft^{-1}$	1.65	1.36	0.061
Specific heat, $Btu\ lb^{-1}\ (°F)^{-1}$	1.00	1.00	0.05
Thermal conductivity, $Btu\ hr^{-1}\ ft^{-1}\ (°F)^{-1}$	0.36	0.37	0.028
Temperature in, °F	100		760
Temperature out, °F	120		150
Operating pressure, psia	60		14
Design pressure, psi	100		500
Test pressure, psi	200		750
Design temperature, °F	250		800
Corrosion allowance, in.	0.03		0.03
Number of passes	1		7
Pressure drop, psi	1		0.03
Velocity, fps	3.4		23 max
Heat transfer rate, Btu/hr	7.4×10^5		

	Desuperheating	Condenser	Subcooling
Condenser section			
Heat load, Btu/hr	160,000	545,000	35,000
Apparent U, $Btu\ hr^{-1}\ ft^{-2}\ (°F)^{-1}$	9.0	340	36
Log mean temperature difference, °F	300	100	70
Required outside area of tubes, ft^2	61	16.5	14

Actual outside area of tubes, ft^2	112
Material specifications	
Tubes	ASTM A213, TP-347
Tubesheet and baffles	ASTM A240, Gr C
Shell	ASTM A358, TP-347
End caps	ASTM A182, Gr F-347
Inlet and outlet pipes	ASTM A312, TP-347

Table 3.27. Design Data for Condenser Performance During a Dump Operation

System	Core	Blanket
Volume of high-pressure system, liters	480	1740
Volume of low-pressure system, liters	1000	3000
Average temperature before dump, °C	280	280
D_2O inventory involved, lb	900	3220
Initial enthalpy of liquid, Btu/lb	531.4	531.4
Total heat to be removed	340,000	1,200,000
Coolant flow to condenser, gpm	80	150
Minimum time to reduce pressure to 14.7 psia, min[a]	4	9.5
Expected time to reduce pressure to 14.7 psia, min[b]	7.5	15

[a]Based on instantaneous dump of each system.
[b]Based on 5-min core dump and 8-min blanket dump and maximum flooded condition in condensers.

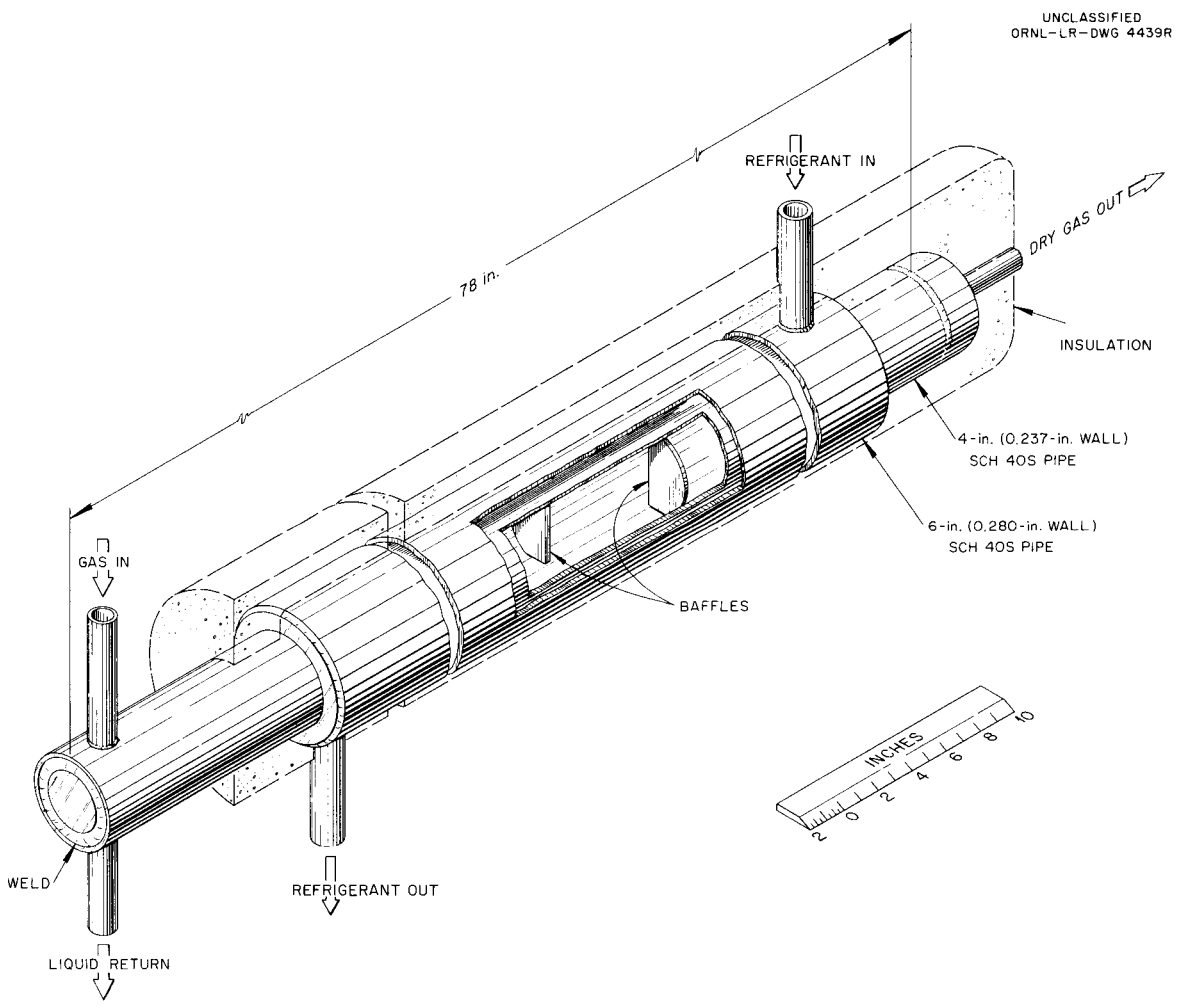

Fig. 3.76. Cold Trap.

ends of the cold traps are left uninsulated to prevent formation of ice plugs in the inlet and exit lines.[220] Sealed cans of Santo-Cel (SiO_2) are fitted around the body of the cold traps to provide insulation. This material was chosen because of its markedly better resistance to radiation damage than the more commonly used low-temperature insulating materials.

Design Data. – Each cold trap was designed to cool 10 ft^3/hr of oxygen (STP) saturated with water vapor at 130°F to –20°F and to remove the radioactive decay energy released by the gaseous fission products which pass through the unit.[219] Two units were specified so that one can be defrosting while the other is in service. They operate on a 24-hr cycle, 12 hr in service and 12 hr for defrosting, standby, and precooling. Precooling for 3 hr prior to resumption of service was specified. Operating pressure is 15 psia; however, the design pressure was specified as 500 psi.

Table 3.28 shows the effect of cold trap exit gas temperature on vapor pressure, humidity, and recovery of water.[221] The adsorption capacity of the charcoal beds increases rapidly with decreasing exit gas temperature.

The major heat load on the cold traps is the internal heat generation due to the radioactivity in the off-gas stream. Calculations[222] indicated the heat load to be insensitive to oxygen flow in the range of 125 to 500 cc/min (STP). The fission product decay energy was estimated to be about 3000 Btu/hr.[223] The heat load resulting from cooling the gas and condensing and freezing the D_2O is about 125 Btu/hr. Overall heat transfer coefficients in the range of 25 to 30 Btu hr^{-1} ft^{-2} $(°F)^{-1}$ were measured in a cold trap mockup experiment.[224]

Table 3.28. Effect of Cold-Trap Exit Temperature on Vapor Pressure, Humidity, and Deposition of Water

	Exit Gas Temperature			
	–20°F	–10°F	10°F	40°F
Partial pressure of H_2O, psia	0.00602	0.0108	0.0309	0.1217
Specific humidity at exit, lb D_2O/lb O_2[a]	0.0002509	0.0004503	0.001291	0.005112
Deposition, lb D_2O/lb O_2[b]	0.1086	0.1084	0.1076	0.1038

[a]Based on total pressure of 15 psia and ignoring partial pressure of xenon and krypton.
[b]Based on entering O_2 stream being saturated with D_2O at 130°F.

3.10 FUEL AND BLANKET STORAGE FACILITIES

3.10.1 Introduction

During prolonged periods of reactor shutdown the fuel and blanket solutions may be transferred to storage tanks (items 16a and 49a) for isolation. Transfers to the storage tanks are accomplished by pressurizing the dump tanks to force the contents to flow through the proper paths. Similarly, the stored solutions are returned to the dump tanks by pressurizing the storage tanks. Except in an emergency, transfers to the storage facilities are delayed after a dump operation until the dump tank pressure has been lowered to atmospheric.

Evaporators (items 16b and 49b) and reflux condensers (items 15 and 39) are provided with each set of storage tanks to provide mixing and removal of radioactive-decay heat from the stored solutions. With reflux condensers in the storage facilities, entrainment separators are not required

to prevent carryover of entrained liquid to the off-gas system. A natural convection-type recombiner (item 117) is provided for the fuel storage tanks; however, a recombiner is not provided for the blanket storage tanks.

3.10.2 Fuel and Blanket Storage Tanks and Evaporators

The storage tanks and evaporators are identical to the respective dump tanks and evaporators since their functions and requirements are the same. The design of these units was described in the previous section.

3.10.3 Reflux Condensers

Description. – Reflux condensers are provided in conjunction with the storage tanks to remove afterheat from the stored solutions. A condenser, shown by Fig. 3.77, consists of four bayonet tubes, 1.5-in. Sched-10 pipe, 14.0 ft long, welded into a tubesheet. Condensation takes place on the outside of the tubes, which are arranged inside a 6-in. Sched-80 pipe as shown. Cooling water enters a bayonet tube through a 1-in. Sched-40 reentrant tube and exits through the annulus. About 21 gpm of cooling water (100°F) is required to dissipate the design heat load of 170 kw at 212°F. Two 4-in. nozzles admit steam to the shell side of the condenser from the two storage tanks.

Design Data. – The condenser design calculations were based on a maximum heat release of 170 kw.[225] This is the estimated rate of heat release 15 min after shutdown, assuming infinite operation of the reactor at 10 Mw. Calculations, which included the effect of heat transfer to the fluid in the reentrant tube as well as that in the annulus, indicated that 27.8 ft^2 of surface area would be required to remove 170 kw of heat.[226] A bayonet-tube arrangement was selected because of its compactness and because it eliminated differential expansion problems. The size of the bayonet tubes was selected on the basis of a compromise between the conflicting requirements of good heat transfer and resistance to collapse under external pressure. The velocity through the annulus was calculated to be 1.9 fps (20.5 gpm). The exit temperature was computed to be 157°F, based on an inlet temperature of 100°F.

The shell side of the condensers is designed for 500 psi and 467°F. Stainless steel type 347 is the construction material.

3.10.4 Fuel-Storage-Tank Recombiner

Description. – A natural convection recombiner, sized to recombine the decomposition gases produced 1 hr after shutdown, is provided for the fuel storage tanks. Details of construction are shown in Fig. 3.78. The internals of the recombiner unit are contained in a 6-ft-long section of 14-in. Sched-30 pipe. Inlet gases and vapor and recirculated vapor are preheated by a steam coil (250-psig steam) before passing through the catalyst bed of platinized York-mesh (12 g of Pt per ft^3 of mesh). The 4-in.-thick catalyst bed has a 0.11 ft^3 volume and is packed to a density of about 15 lb/ft^3.

Superheated steam and high-temperature noncondensable gases leave the catalyst bed and rise through an updraft flue to the top of the unit, where they are cooled by a coil located outside of the flue. Because of density effects the cooled gases flow downward outside of the flue to be recirculated through the bed. The recirculated vapor and gases dilute the inlet radiolytic gases to below the explosive limit.

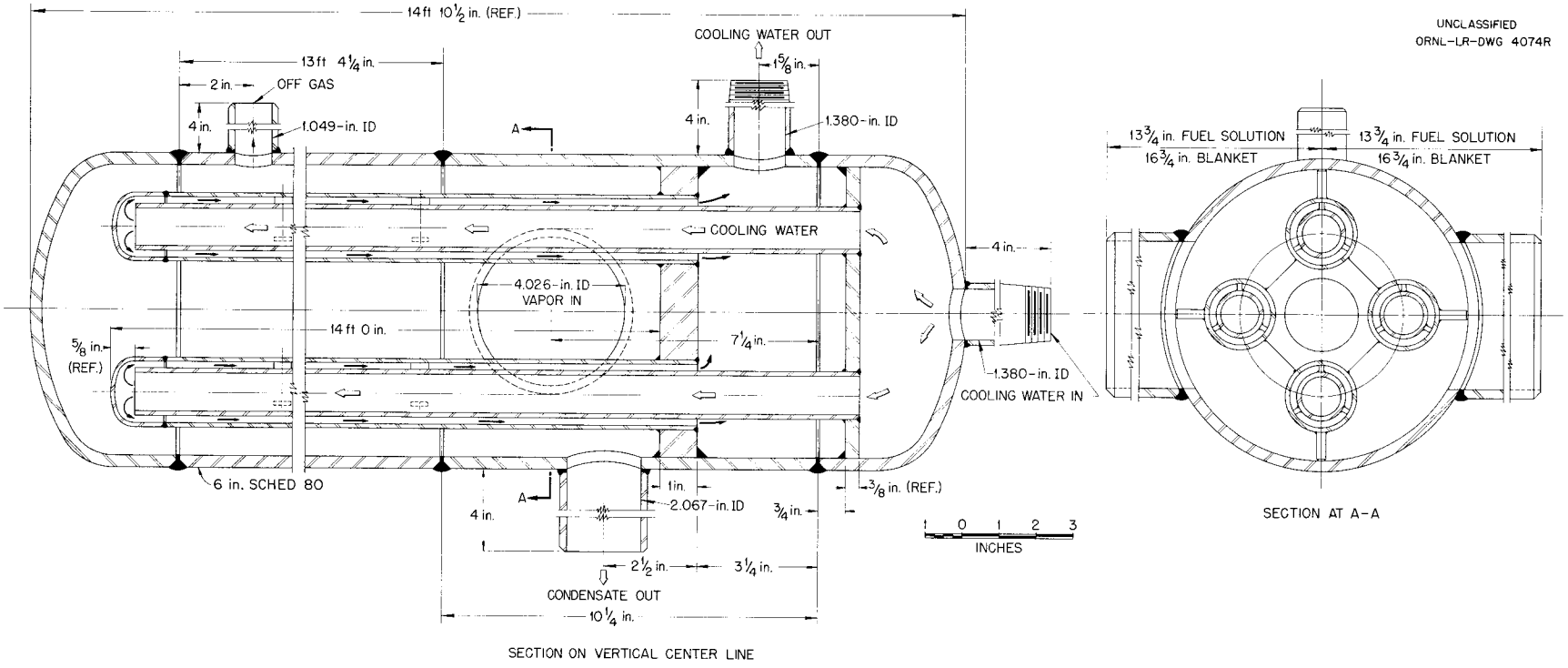

Fig. 3.77. HRT Reflux Condenser.

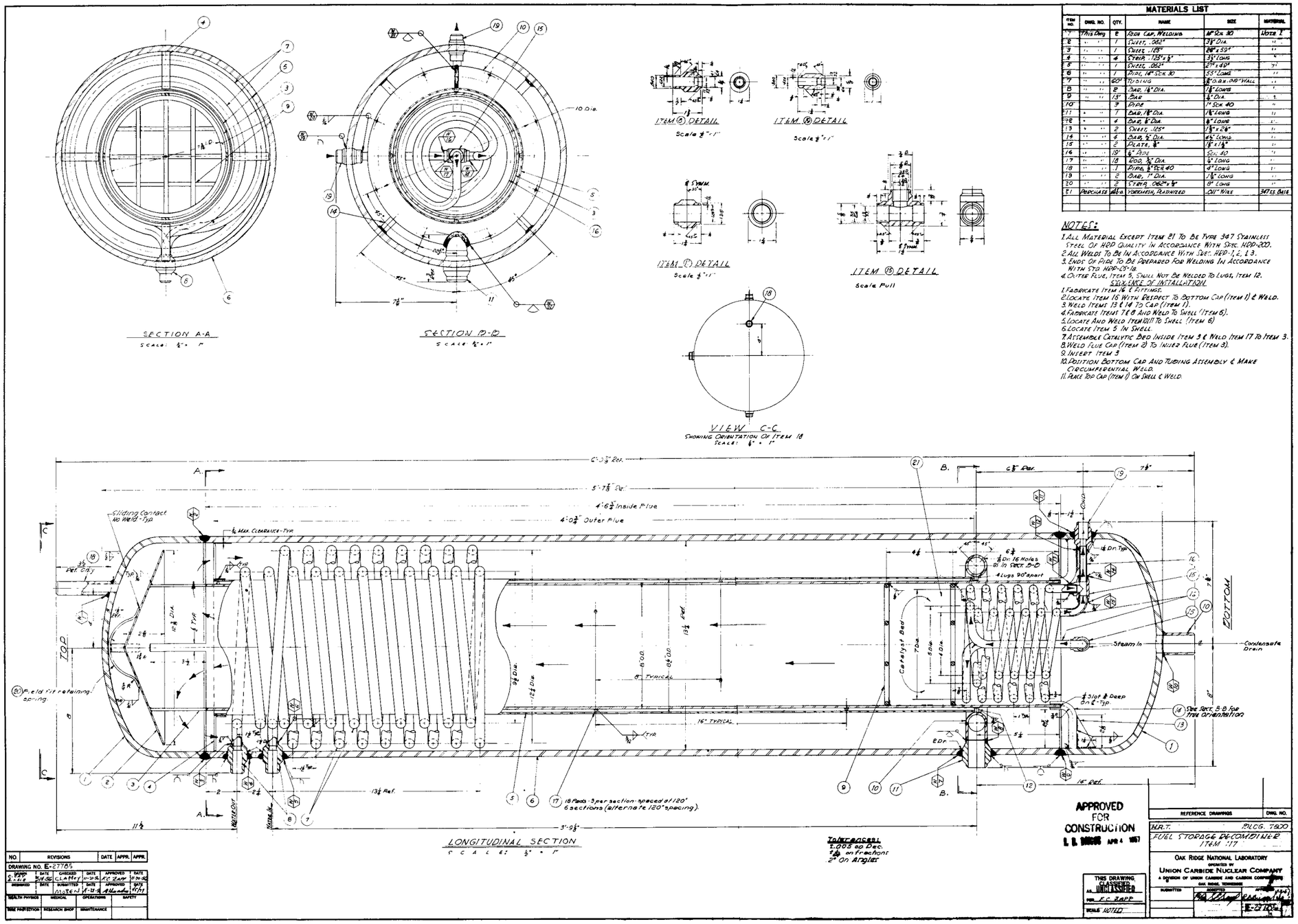

MATERIALS LIST

ITEM NO.	DWG. NO.	QTY.	NAME	SIZE	MATERIAL
1	This Dwg	2	Pipe Cap, Welding	14" Sch. 30	Note 2
2	" "	1	Sheet, .062"	7 1/8" Dia.	"
3	" "	1	Sheet, .125"	88" x 59"	"
4	" "	4	Strip, .125" x 1/2"	3 1/2" Long	"
5	" "	1	Sheet, .062"	27" x 49"	"
6	" "	1	Pipe, 14" Sch. 30	55" Long	"
7	" "	60'	Tubing	1/2" O.D. x .049" Wall	"
8	" "	2	Bar, 1/4" Dia.	1 1/2" Long	"
9	" "	13'	Bar	1/4" Dia.	"
10		3	Pipe	1" Sch. 40	"
11	" "	1	Bar, 1/4" Dia.	1 1/2" Long	"
12	" "	4	Bar, 1/2" Dia.	1/2" Long	"
13	" "	2	Sheet, .125"	1 1/2" x 2 1/2"	"
14	" "	4	Bar, 1/2" Dia.	4 1/2" Long	"
15	" "	2	Plate, 1/2"	1 1/2" x 1 1/2"	"
16	" "	15'	6" Pipe	Sch. 40	"
17	" "	18	Rod, 3/4" Dia.	4 1/2" Long	"
18	" "	1	Pipe, 3" Sch. 40	4" Long	"
19	" "	2	Bar, 1" Dia.	1 1/2" Long	"
20	" "	2	Strip, .062" x 1/2"	8" Long	"
21	Purchase	As req'd	Vermiculite, Radwized	.011" Wire	347 SS Base

NOTES:

1. All Material Except Item 21 To Be Type 347 Stainless Steel Of HDP Quality In Accordance With Spec. HDP-200.
2. All Welds To Be In Accordance With Spec. HDP-1, 2, & 3.
3. Ends Of Pipe To Be Prepared For Welding In Accordance With Std. HDP-CS-18.
4. Outer Flue, Item 5, Shall Not Be Welded To Lugs, Item 12.

SEQUENCE OF INSTALLATION

1. Fabricate Item 16 & Fittings.
2. Locate Item 16 With Respect To Bottom Cap (Item 1) & Weld.
3. Weld Items 13 & 14 To Cap (Item 1).
4. Fabricate Items 7 & 8 And Weld To Shell (Item 6).
5. Locate And Weld Item 20 & 11 To Shell (Item 6)
6. Locate Item 5 In Shell.
7. Assemble Catalytic Bed Inside Item 3 & Weld Item 17 To Item 3.
8. Weld Flue Cap (Item 2) To Inner Flue (Item 3).
9. Insert Item 3
10. Position Bottom Cap And Tubing Assembly & Make Circumferential Weld.
11. Place Top Cap (Item 1) On Shell & Weld.

Fig. 3.78. Fuel Storage Recombiner.

A drain is provided to return the condensate to the storage tank. A valved vent line from the recombiner to the charcoal-adsorber bed bypasses the cold traps. This line remains closed until the pressure in the recombiner increases to a predetermined level (30 psig) as a result of gaseous fission product accumulation. When the pressure reaches this level, the recombiner is vented through the charcoal adsorber.

Design Data. – An investigation of the gaseous activity in the fuel storage tanks recommended the use of a recombiner to remove deuterium and oxygen from the storage tank off-gas stream.[227] With a recombiner to prevent the formation of explosive mixtures, gaseous fission products could be held in the storage tanks and released to the atmosphere through the off-gas system in small quantities.

The recombiner is designed to recombine the decomposition gases at a rate equal to the production 1 hr after shutdown from long-term operation at 10 Mw.[228] Figure 3.79 shows the D_2 production rate as a function of time after shutdown for 1-, 5-, and 10-Mw operation. Air is assumed to be the diluent. The concentration of D_2 in the inlet stream is assumed to be 5 mole %. The temperature rise across the catalyst bed was estimated to be about 700°F.

A 8-in.-diam by 4-ft-high updraft flue was specified above the catalyst.[229] A steam coil, 19 ft of $\frac{1}{4}$-in. Sched-40 pipe, is located at the bottom of the flue to initiate circulation through the catalyst bed. The required heat input is about 1000 Btu/hr. A water-cooled coil, 60 ft of $\frac{5}{8}$-in.-OD by 0.049-in.-thick tubing, located in the annulus provides sufficient heat removal capacity to condense the steam and to cool the recombination products to 140°F.

A natural-circulation recombiner test unit was constructed and operated to investigate the feasibility of this type of unit for use without a blower or evaporator to supply diluent.[230] The unit was shown to operate satisfactorily using air as the diluent. A prototype test unit of the model shown in Fig. 3.78 was also built, tested, and shown to perform satisfactorily at hydrogen flows up to 150% of design conditions.[229]

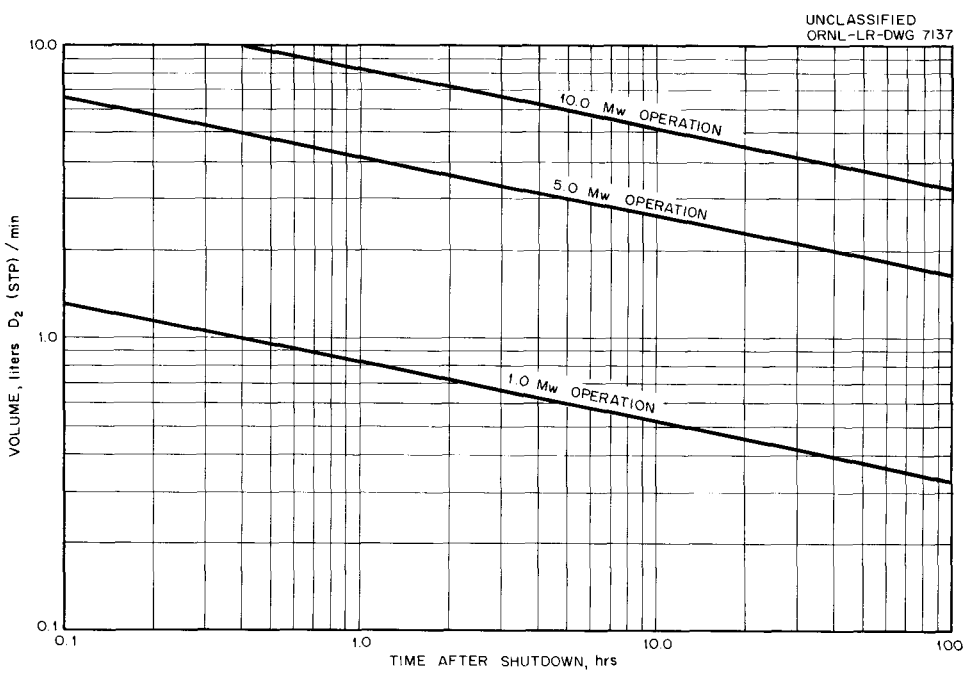

Fig. 3.79. Production of D_2 Gas in Fuel Outer Dump Tanks of HRT (After Reactor Shutdown).

3.11 WASTE AND VENT SYSTEM COMPONENTS

3.11.1 Introduction

The waste and vent system is designed to dispose of all radioactive wastes produced in the reactor and chemical processing systems, including water used for shielding purposes. The system includes pumps for removing high-level-activity fluids from the cells to a waste storage tank, evaporators and condensers for concentrating wastes, and a controlled means of discharging decontaminated wastes to a tributary creek of the Clinch River. Gases vented from the cell equipment pass through charcoal-adsorber beds for holdup and decay before being discharged to the atmosphere. A detailed description of the system has been reported;[231] a description of the flow sheet was given in Sec 2.7. Design considerations of a few of the more important components will be discussed here.

3.11.2 Reactor Off-Gas Components

A continuous flow of oxygen through the reactor system sweeps out the gaseous fission products xenon and krypton.[232] As the flow of oxygen is small [500 cc/min (STP)], it is desirable to discharge the off-gas to the atmosphere. Because health physics considerations impose limitations on the release of fission products, charcoal adsorber beds are provided to retain the gaseous fission products until all but the Kr^{85} decay.

Two parallel paths are provided at the discharge end of the adsorber beds; one path provides for operation of the beds at positive pressure, the other at negative pressure. Each path contains a mercury seal pot to prevent atmospheric contamination of the beds. In the first case the dump tanks provide positive pressure for flow through the beds; in the second case a vacuum pump (item 11) permits operation at reduced pressure to reduce the pressure in the dump tanks or to remove adsorbed gases from the beds.

The two parallel paths are reunited upstream from a filter station (item 12). The filtered gas enters the suction of the stack fan (item 13a), where the gas stream is diluted with about 1400 cfm (STP) of air, and then it is discharged to the atmosphere from the top of a 100-ft-high stack (item 13).

Each of the four adsorber beds (items 10a, 10b, 10c, and 10d) is designed for a flow of 250 cc/min. Two of the units are operated in parallel to give the desired capacity, while a third unit is on standby. The fourth unit (item 10d) is provided for use with the chemical processing plant.

Each bed consists of a horizontal assembly of pipe lengths of varying diameters, arranged in series. About 520 lb of 8- to 14-mesh activated charcoal (Columbia G) is packed in each bed (80% void space). The diameters and lengths of the pipes were chosen to prevent the packed beds from reaching temperatures which would cause excessive oxidation of the charcoal. Figure 3.80 is a schematic drawing of one of the charcoal beds. Construction details and material specifications are indicated in the figure. Thermocouples are provided at the entrance of each pipe section to indicate bed temperatures during reactor operation.

Additional delay time to reduce the inlet concentration of Kr^{88} was necessary to prevent excessive temperatures in the first section of the bed. The delay time is provided by 160 ft of 3-in. pipe at the entrance of the charcoal bed. The empty pipe and the charcoal-filled pipe are immersed in a shielded pit of cooling water maintained at about 85°F.

The charcoal adsorbers are designed to handle the reactor off-gas resulting from long-term operation of HRE-2 at 10 Mw. Oxygen, which is added to the reactor high-pressure system to stablize the uranium in the U^{6+} state and to inhibit the corrosion of stainless steel, is stripped from the fuel solution along with the gaseous fission products by the boiling in the dump tanks. The oxygen flow 500-cc/min (STP) removes the gaseous fission products from the low-pressure system and carries them through the charcoal adsorber beds where the fission gases are delayed

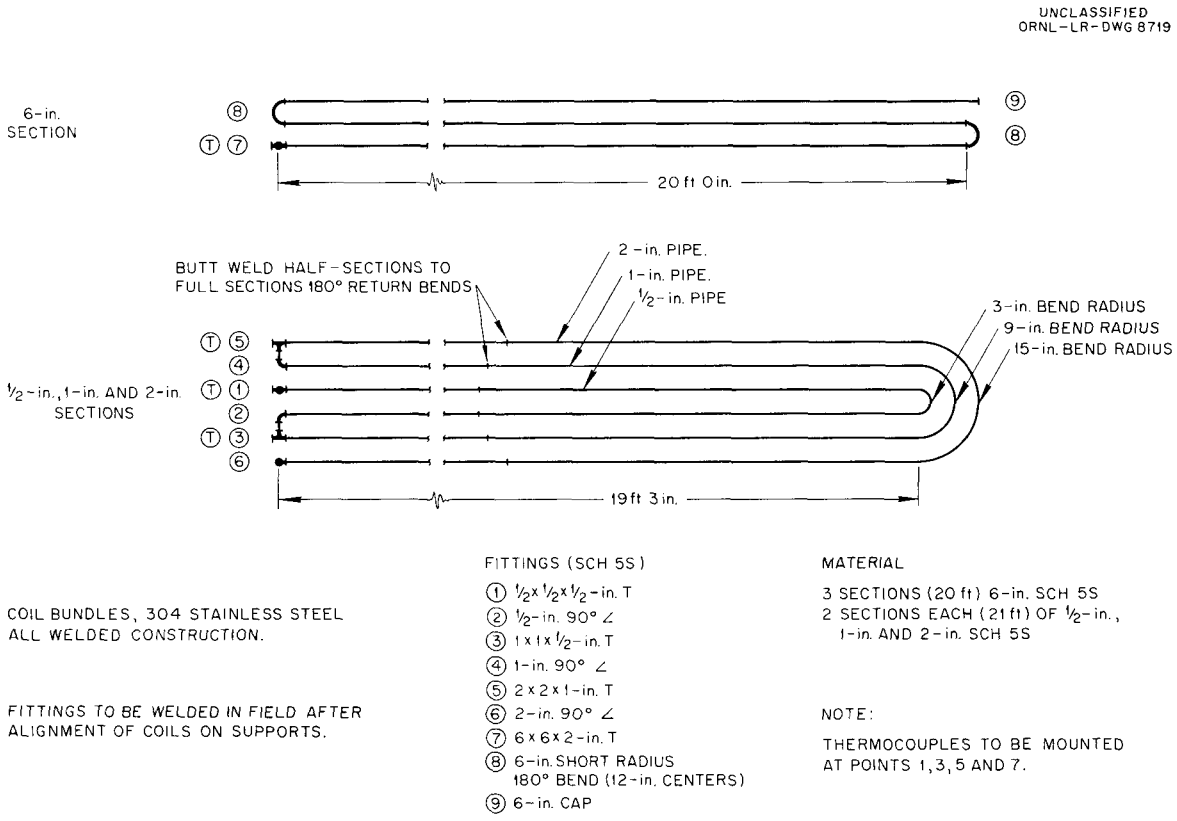

Fig. 3.80. *Schematic Arrangement of Fission-Product Adsorption System.*

in their passage by the process of adsorption and desorption on the charcoal surfaces. This allows time for the short-lived isotopes of krypton and xenon to decay to a small fraction of their original concentration. Long-lived isotopes are expected to pass through the beds without appreciable decay. Thus for an optimum-sized bed, only Kr^{85} (10.3-yr half-life) will pass through without an appreciable reduction in concentration.

Calculations of the gaseous activity in the reactor as a function of time have been reported.[233] Based on an estimated holdup time inside the reactor system of 13,600 sec,[222] the composition of the off-gas stream as it enters the adsorber pit is given[232] in Table 3.29.

The calculations on which the design is based solved approximate equations for (1) the depletion of the isotopes from the gas stream in isothermal increments of the adsorption bed, and (2) the radial temperature distribution in the bed at steady-state conditions. Since the beds were designed on the basis of meager literature adsorption equilibrium data of krypton and xenon, a safety factor of about 6 was used to compensate for the lack of experimental data on the particular conditions. Table 3.30 shows a comparison of the actual size to the calculated required size.[231] (Note: About 90% of the bed volume is in the 6-in.-diam pipe region.)

As more experimental information and improved design techniques became available,[234,235] the performance of the charcoal beds was reevaluated for various operating conditions.[236] Figures 3.81 and 3.82 show the results of the revised calculations for maximum temperatures and discharge activities. A radioactive tracer technique was developed later,[237] which permitted more exact determination of the charcoal-bed characteristics installed. The results of these tests predicted activity discharge rates lower than previously calculated,[236] the difference being attributed to a lower bed temperature and to the use of an adsorption coefficient determined from holdup tests on the HRE-2 adsorber beds. These tests also indicated that an increase in bed temperature of 10°C is equivalent to an 18% increase in gas flow.

Table 3.29. Fission-Product Gas Composition at Entrance to Adsorption Bed

Mass	Half-Life	Flow Rate (atoms/sec)(10^{-15})	Partial Pressure[a] (mm Hg)
Krypton			
83*m*	11.4 m	0.40	0.001385
83	Stable	1.58	0.005475
84	Stable	2.95	0.010215
85*m*	4.36 h	1.56	0.00541
85	10.27 y	1.29	0.00447
86	Stable	5.64	0.019535
87	78 m	1.21	0.00419
88	2.77 h	4.75	0.01645
Xenon			
$131m_2$	12.0 d	0.097	0.00035
131	Stable	10.04	0.0348
132	Stable	15.05	0.05215
133*m*	2.3 d	0.525	0.00180
133	5.27 d	22.0	0.00762
134	Stable	26.4	0.09145
135	9.13 h	14.8	0.0513
136		21.70	0.0752
		Total 131.0	0.4191

[a]Total pressure is 827 mm Hg.

Table 3.30. Comparison of Actual Size of Charcoal Bed with Calculated Requirement

	Calculated Limiting Design		Actual Design Specifications		Approximate Safety Factor
	Length (ft)	Pipe Size (in.)	Length (ft)	Pipe Size (in.)	
Empty pipe	106	2	160	3	3
Charcoal unit	20	½	40	½	2
	10	1	40	1	4
	10	2	40	2	4
	10	6	60	6	6

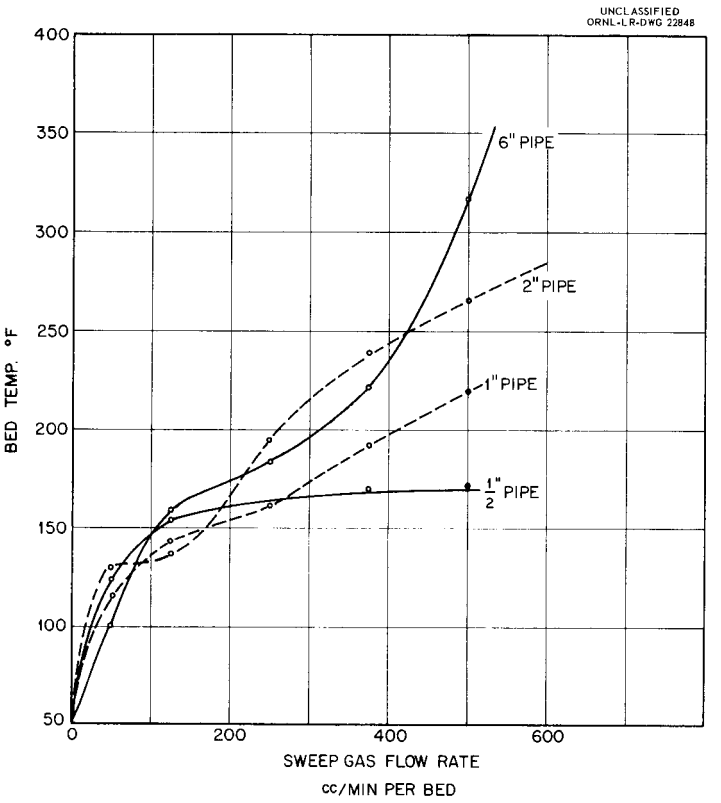

Fig. 3.81. Maximum Bed Temperature vs Sweep-Gas Flow Rate.

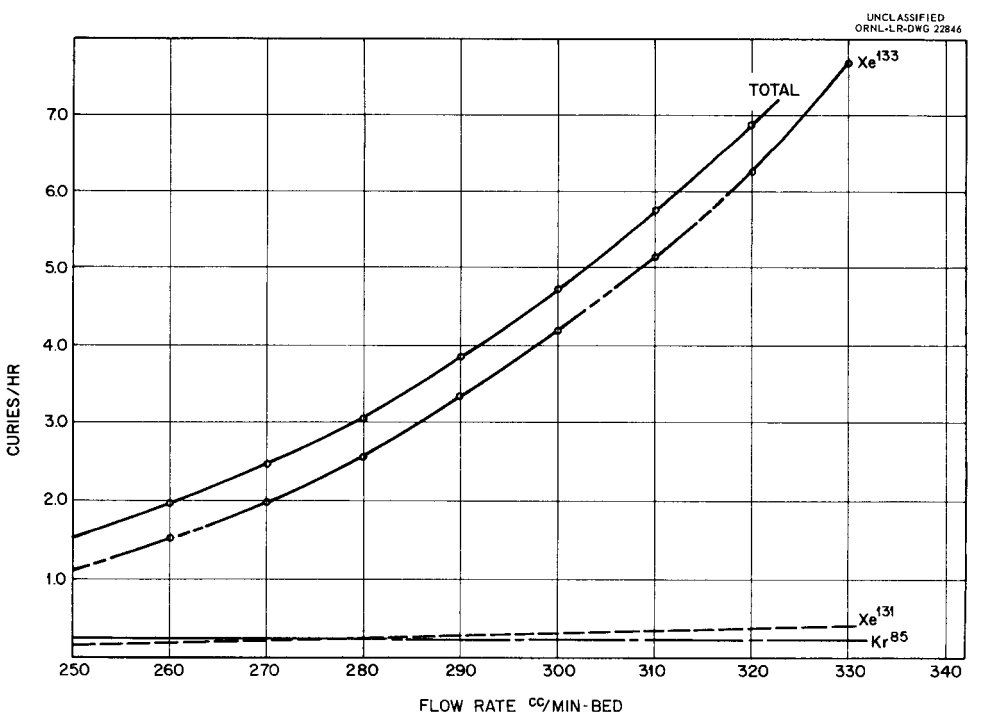

Fig. 3.82. Activity Discharge from HRT vs Sweep-Gas Flow Rate.

The probability and consequences of igniting the charcoal beds during reactor operation was investigated in a series of laboratory tests.[238] It was shown for stimulated operating conditions that ignition of the charcoal could be expected at temperatures somewhat less than 290°C. It was also shown that in the event ignition does occur, simply cutting off the supply of the oxygen sweep gas would control the fire. Without a flow of oxygen to support combustion, CO and CO_2 combustion products blanket the burning region and quickly extinguish the fire. (During run 20, one of the charcoal beds was ignited during some experiments designed to initiate catalytic recombination by flash recombination. The fire was extinguished when the oxygen flow was cut off. Subsequent tests indicated very little loss of charcoal.[239])

3.11.3 Liquid Waste Components

Facilities are provided for processing and disposing of liquid wastes ranging from large volumes of low-level-activity to small volumes of high-level-activity wastes. The system has been described in detail elsewhere[231,240] (sec Sec. 2.7). Storage facilities include a 1000-gal waste condensate tank (item 93), a 12,000-gal waste storage tank (item 94), and a 300,000-gal waste retention pond (item 95). The 1000- and 12,000-gal stainless steel storage tanks are buried under several feet of earth for shielding purposes. High-level-activity waste is jetted to the 12,000-gal tank for ultimate concentration and disposal. Low-level waste is jetted directly to the retention pond for ultimate disposal in the Clinch River.

Waste material stored in the 12,000-gal tank is concentrated in the waste evaporator (item 80a) shown in Fig. 3.83. The design is essentially identical to the dump-tank evaporators (see Sec 3.9.2), except that three evaporator legs are provided.[241] Evaporation capacity is 1.5 gpm. Bayonet heaters are included in the evaporator legs to permit evaporation of the solution to a volume which can be handled by a shielded waste carrier.[240] The waste evaporator header is constructed of a 21-ft section of 24-in. Sched-30 pipe. A single vapor outlet connects to an entrainment separator (item 80b), which is identical to the dump-tank entrainment separators (see Sec. 3.9.2). Two shell-and-tube condensors (items 90a and 90b), each having about 25 ft^2 of condensing surface, condense the vapors.[241] The condensate returns to the 1000-gal storage tank for recirculating through the 12,000-gal tank and evaporator or for transfer to the retention pond. A shielded sampler is provided for assay purposes.[242] A metering tank prevents overfilling the waste carrier with concentrate during removal operations.

The reactor and adjacent chemical processing cells can be flooded with water during maintenance operations for shielding purposes.[243] A header and valving station permits the cells to be selectively flooded (about 200,000 gal in the reactor cell and about 42,000 gal in each of the chemical processing cells) through a 6-in. pipe. A 1000-gpm centrifugal pump (item 99) is provided to pump the shield water from the cells to the retention pond. The suction lines to the pump terminate at a point 1 ft above the bottom of the cells to prevent pumping the last foot of shield water by this means. Steam-jet eductors with suction lines terminating in sumps remove the remaining portion of the shield water to either the 12,000-gal storage tank or to the retention pond, depending on activity level.

3.11.4 Cell-Spray and Scavenging System

A dual purpose system for reducing cell pressure following a catastrophic rupture of the high-pressure system and for scavenging residual fluids from flanged joints being opened during maintenance operations is provided as a part of the waste and vent system. The system, shown schematically in Fig. 3.84, contains 12 fog-jet nozzles for producing water fog in event of a system

rupture. It is not expected that the system will reduce the peak pressure following a rupture; however, it will be effective in reducing the time required for the cell pressure to return to atmospheric.

The lines leading to the spray nozzles also contain 24 quick-disconnect taps to which suction hoses can be attached for scavenging operations. The hoses are then positioned and attached to suction devices as desired. Vacuum is applied to the device by means of steam-jet eductors exhausting to the waste and vent system.

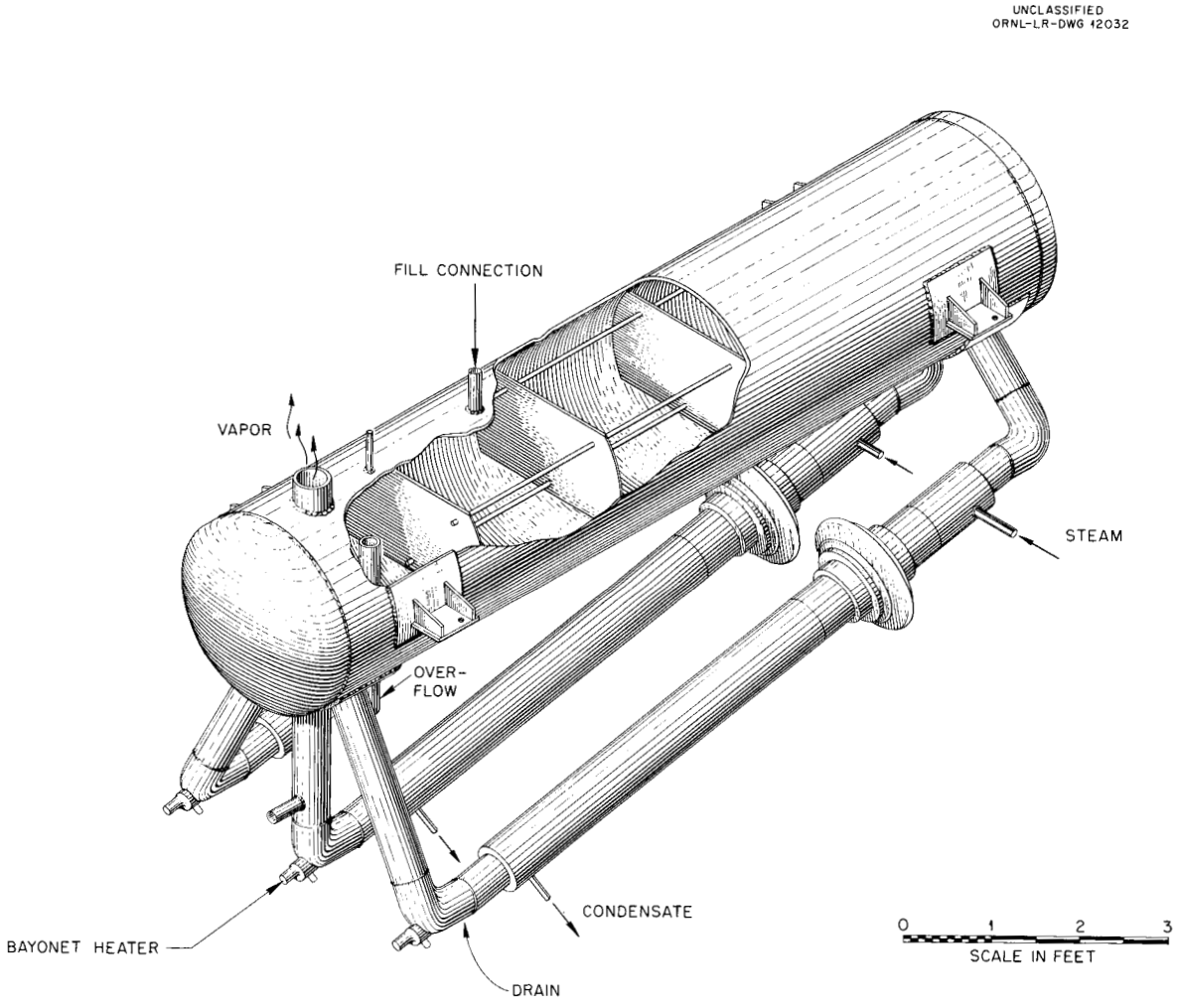

Fig. 3.83. Waste Evaporator.

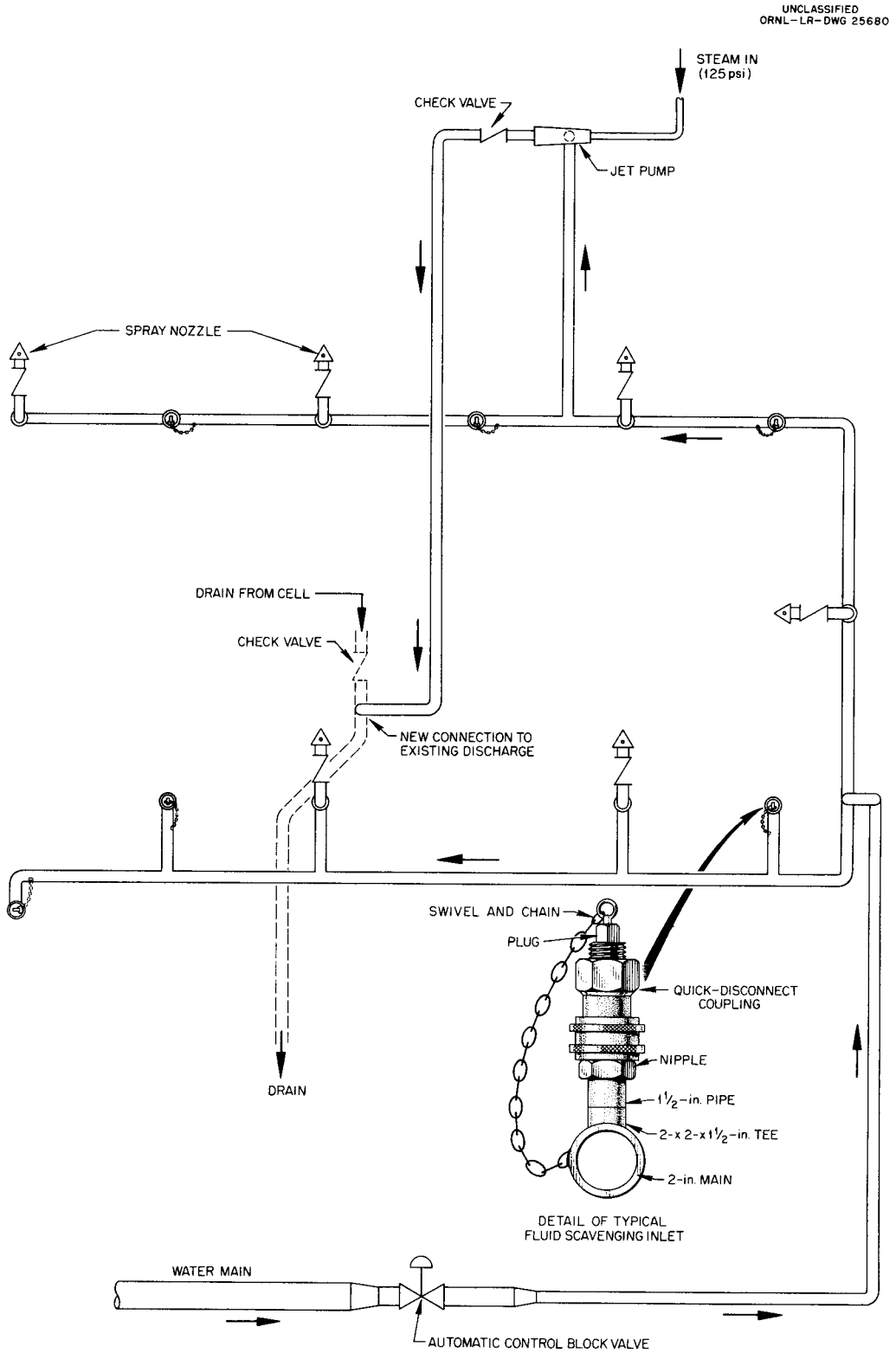

Fig. 3.84. HRT Cell-Spray and Flange-Scavenging System.

3.12 REACTOR STEAM SYSTEM COMPONENTS

3.12.1 Description

From a study of several possible power generation schemes,[244] the one selected for HRE-2 employs a small turbine-generator set (available from HRE-1) to generate about 300 kw of electricity and a steam killer to condense the excess steam. A general description of the system was given in Sec 2.6. Details pertaining to operation and control of the system are reported in the Operator's Manual.[245] Design criteria and detailed design of the system have already been reported.[109,246–249]

Since the high cost of process water at the reactor site precluded the use of a once-through cooling system, two alternate methods for condensing the excess steam were investigated.[246] One method employed a cooling-tower system to serve both the turbine condenser and the steam killer, the other method employed a cooling tower for the turbine condenser water and a fan-cooled, air condenser for the relatively high-temperature (353°F) excess steam. The study showed the latter method to be slightly more economical, due largely to the reduced cost of makeup water.

An investigation of means of chemically cleaning the steam system recommended a cleaning procedure based on the use of a 10% phosphoric acid solution containing 0.2% "Rodine-45" inhibitor.[250] Wet storage was also recommended for the steam system using steam condensate containing 100 ppm of hydrazine. Studies of water treatment programs for use in the steam system were hampered by a lack of knowledge on the effectiveness of various chemical additives in the presence of high-radiation fields.[120,121] The recommended treatment was based on the use of sodium phosphate (60 ppm PO_4) for pH control (10.0) and prevention of caustic cracking and hydrazine for use as an oxygen scavenger. (A discussion of the water treatment experience in HRE-2 has been reported.[251])

A study[252] of the permissible steam leakage to the atmosphere through open steam vents in the steam killer was made to determine the radiation hazard to operating personnel in the event of a tube rupture in the fuel system steam generator. The calculations indicated a negligible radiation hazard if the steam killer blower is operating. If the blower is not operating, a natural convection loop will be initiated in the steam killer, and the inhalation hazard will be negligible for leak rates past the steam "stop" valves of less than 4 lb/min.

3.12.2 Fuel and Blanket Steam Drums

Steam drums provide a minimum delay of 2 sec at 10-Mw operation and 12 sec at 5-Mw operation between the steam generators and the automatic "stop" valves. The drums are located outside the primary shield but inside a secondary shield (the west valve pit). Radiation detectors monitor the steam for radioactivity as it enters the drums. If activity is detected (indicating a tube leak in the primary heat exchanger), the automatic "stop" valves close. The delay time is sufficient to prevent radioactive steam from leaving the steam drums.

During normal operation condensate collected in the steam drums returns by gravity to the primary heat exchangers. However, at power levels above 7.6-Mw pressure losses prevent gravity return and it is necessary to trap the condensate out of the drums and to the deaerator.[125] (See Sec 3.5.7 for additional discussion.)

The fuel system steam drum (item 53) is a 24-in.-OD by $^{15}/_{16}$-in.-thick cylindrical pressure vessel.[245] Having a length of 19 ft 2 in. and a volume of about 50 ft^3, the vessel is constructed of ASTM A-212 Grade B material. It is designed for 1250 psi at 600°F, according to the rules of the ASME Unfired Pressure Vessel Code.

The design[245] of the blanket system steam drum (item 54) is the same as the fuel system steam drum except that it is 18-in. OD by 14-ft long and has a volume of 21 ft^3.

3.12.3 Turbine-Generator Condenser

A portion of the steam generated by the reactor is used in a turbine-generator set to produce about 300 kw of electricity. The remainder of the steam is condensed in an air-cooled condenser (see Sec 3.12.4). The turbine-generator condenser (items 57, 58, and 59) and associated auxiliaries are the same power generation equipment used in HRE-1. Since this equipment has been described in detail,[245,253] only a brief description will be given here.

The turbine-generator set is a Worthington Corporation unit consisting of:

1. a Worthington type S, 250-kw, 5050-rpm, straight condensing turbine with a two-row velocity compound stage followed by eight impulse stages;
2. a Worthington type E-4, double-helical, single reduction gear to reduce the turbine speed of 5050 rpm to the generator speed of 1200 rpm;
3. an Electric Machinery Manufacturing Company 345-kva, 276-kw at 80% power factor, three-phase, 60-cycle, 460-v, 1200-rpm alternating current generator with a direct connected 5-kw, 125-v exciter.

The turbine condenser, also supplied by the Worthington Corporation, has 400 ft^2 of surface area. Steam makes a single pass outside the tubes, while cooling-tower water (see Sec 2.5) makes three passes through the tubes. The tubes, 245 in number, are $^5/_8$-in. OD by 18-BWG by 10 ft 2 in. in length and are constructed of Admiralty metal. Design capacity of the condenser is 6000 lb/hr of condensate at 2 in. Hg absolute pressure, using 575 gpm of cooling water at 70°F.

3.12.4 Air-Cooled Condenser

Steam generated by the reactor and not used in the turbine is condensed in an air-cooled condenser (item 60) located on the roof of the reactor building as shown in Fig. 3.85. The air-cooled condenser is a Fluor Fintube heat exchanger, purchased according to ORNL Specification JS-HRT-5.[6]

The unit consists of three horizontal, finned-tube sections connected in parallel for one pass operation. A 12-ft-diam, six-blade fan blows air up through the tube banks to condense the steam. Steam enters an inlet header through a 6-in. flanged nozzle; condensate exits from the discharge header through a 2-in. flanged nozzle. The rate of condensation is controlled by adjustment of louvers to block the flow of air. Additional design data are given in ORNL Specification JS-HRT-5 and Table 3.31.

3.12.5 Deaerator and Feedwater Storage Tank

A deaerator (item 64) is provided to remove dissolved gases from the feedwater before it is returned to the reactor steam generators. The storage tank functions as a condensate surge tank and accumulator. The unit was purchased according to ORNL Specification JS-HRT-1 (ref 6) from the Cochrane Corporation. It is designed to produce feedwater containing less than 0.005 cc/liter of oxygen at a rate of 20,000 lb/hr.[246]

The deaerator assembly, located on the roof of the reactor building, consists of a vertical tray-type deaerator unit mounted on a 1500-gal, horizontal, cylindrical storage tank. Inlet water is sprayed into a preheating section where it comes into contact with steam from a nozzle. The heated water and steam flow downward into a series of distribution trays. Deaeration occurs as the water cascades downward from the trays into the storage tank. Excess steam flows to the vent condenser carrying noncondensable gases with it. Most of the excess steam is condensed; however, a portion is vented to atmosphere along with the noncondensable gases.

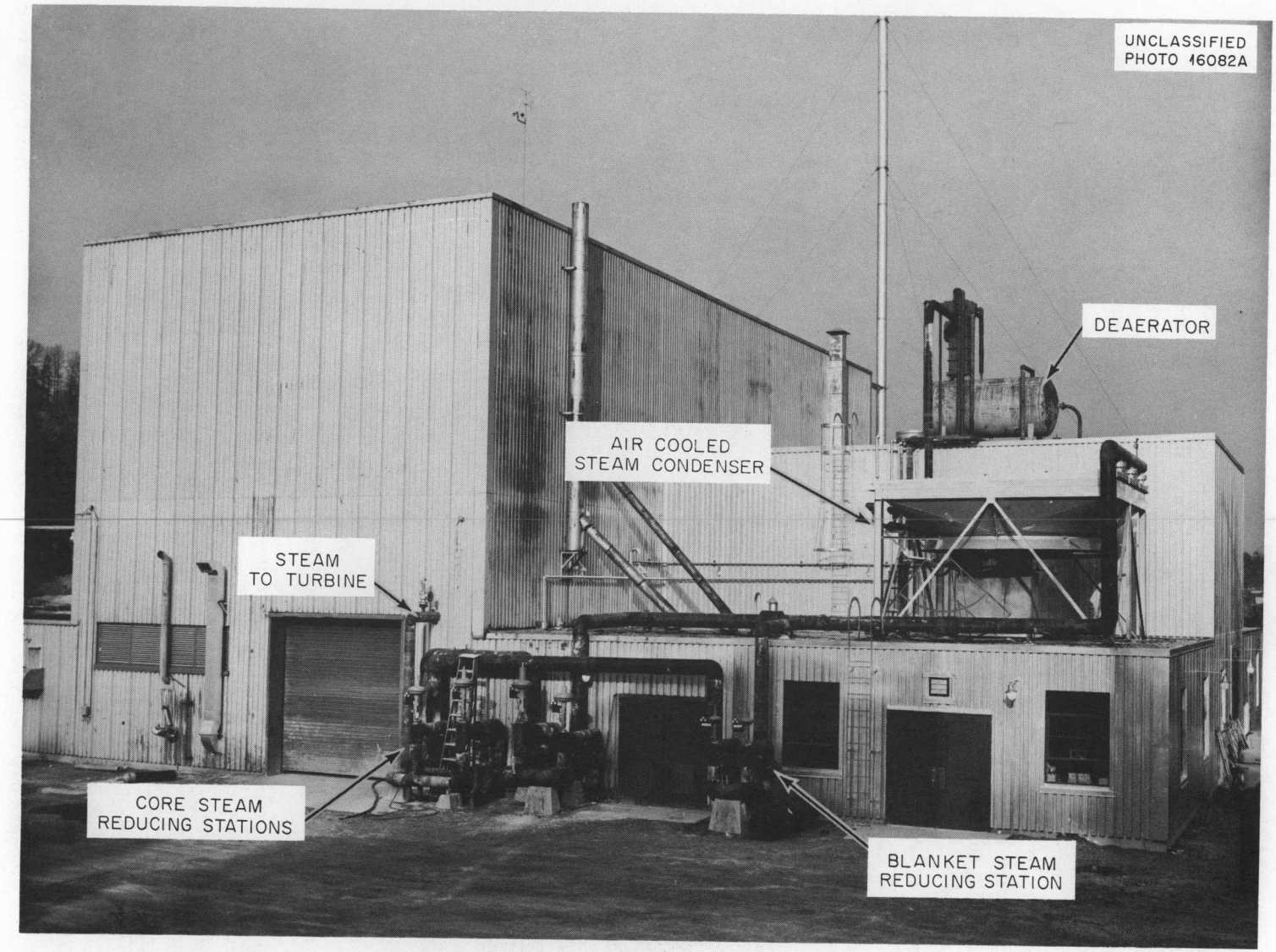

Fig. 3.85. Reactor Heat-Removal System.

Table 3.31. Air-Cooled Condenser Design Data

ORNL specification	JS-HRT-5
Manufacturer	Fluor Company
Type	Fin Fan
Finned sections	3
Tubes per section	110
Tube size, in.	5/8
Tube length, ft	16
Tube material	Deoxidized copper
Fin material	Aluminum
Fins per inch	10.5
Fin height, in.	7/16
Design pressure, psi	300
Design temperature	450°F
Steam condensed at 140 psia (saturated), lb/hr	35,000
Heat exchanged at 353°F, Btu/hr	30.5×10^6
Heat transfer area, ft^2	13,700
Fan speed, rpm	232
Air flow at 65°F, cfm	181,000
Fan motor	General Electric
Model	SK-1404AAJ-1, type K
Horsepower	25
Speed, rpm	1765

The vent condenser is a multipass, U-tube heat exchanger. It is capable of condensing 1000 lb/hr of saturated steam at atmospheric pressure with cooling tower water at 90°F. The water side is designed for 125 psi, the shell side for 20 psi. The storage tank, designed for 30 psi, has a safety relief valve set to relieve at 15 psig. It has a relief capacity of 5900 lb/hr.

3.12.6 Feedwater Pumps

A maximum feedwater pumping requirement of 94 gpm was used as the basis for the selection of feed pumps.[109,246] A small (23 gpm) triplex feedwater pump was available from HRE-1 surplus equipment. A second feedwater pump (75 gpm) was purchased according to ORNL Specification JS-HRT-4.[6] Ordinarily the smaller pump is used for standby service. At the higher power levels it is used to supplement the larger feedwater pump.

Both pumps are driven by manually-adjusted, variable-speed drives. Control of the feedwater flow is derived from liquid level indicators located on the reactor steam generators. Excess pumpage is returned to the deaerator storage tank through a back-pressure control valve, manually adjusted to minimize pumping power at any reactor power level. Safety relief valves set to relieve at 1500 psi are provided on the discharge of each pump. Nitrogen-charged accumulators are also provided on the discharge side of the pumps to reduce pressure pulsations. Additional design data are presented in Table 3.32.[245,246]

An extensive study of the feedwater control system indicated the system to be stable and adequate for power levels up to 10 Mw.[254–256]

Table 3.32. Feedwater Pump Design Data

Pump number	65a	65b
ORNL specification	JS-HRT-4	HRE-1 surplus
Make	Worthington	Worthington
Type	VTE-2(triplex)	VTE(triplex)
Bore, in.	2.5	1.5
Stroke, in.	5.0	2.0
Design speed, rpm	230	420
Minimum operating speed, rpm	50	50
Design capacity, gpm	75	22.9
Design discharge pressure, psi	1300	1200
Minimum NBSH, ft of fluid	24	24
Make of motor drive	U.S. Motors	Reeves
Type	83.504	8402
Horsepower	50	20
Speed adjustment	Manual	Manual
Speed range, rpm	1830-610	420-70

3.12.7 Package Boiler

An oil-fired package boiler (item 56) is used to generate high-pressure steam for heating the reactor systems up to operating temperature and for making up system heat losses when the reactor is operated at less than heat loss power.[246,257] The self-contained unit is a Besler Corporation Model-55X package boiler, purchased according to ORNL Specification JS-HRT-6.[6] It is designed according to the rules of the ASME Boiler Code to operate at 1500 psi and 600°F. A minimum continuous steaming rate over an 8-hr period of 1680 lb/hr at 1500 psia discharge pressure was specified.

Under test conditions of 1500 psi outlet pressure, 1840 lb/hr of steam was generated, using 212°F feedwater.[246] Fuel consumption at maximum load is 135 lb/hr of No. 3 fuel oil. Adjustment of the flame is modulating over a 5 : 1 range. At very low heat loads the flame is extinguished and reignited as required. Control of output pressure was specified as ±5% of the preset pressure.

Design capacity of the package boiler is equivalent to a heat rate of 300 kw at 300°C.[257] Calculations indicated that the unit should be capable of heating the reactor and associated equipment from room temperature to operating temperature in about 7 hr.[246] A manifold is provided so that 250-psia building steam can be used to supplement the package boiler during the initial stages of heat up.

3.13 REACTOR COOLING-WATER-SYSTEM COMPONENTS

3.13.1 Description

The cooling-water systems, of which there are three, supply coolant to the reactor plant for the following purposes: (a) supplementing the air-cooled condenser and the turbo-generator in removing the reactor heat, (b) cooling process streams for metering, sampling, and equipment protection against overheating, (c) condensing vapors, and (d) removing fission product decay heat.

One system uses nonrecirculated potable water as the coolant. This system serves the normal sanitary and fire-fighting needs in addition to a few special reactor coolant needs (tabulated in Table 2.5), where there is extremely small likelihood of contaminating the water supply. The second system uses recirculated potable water as the coolant. The cooling tower basin provides an air break in the system to prevent contamination of the potable water supply. This system supplies coolant to the demineralized-water heat exchanger, the turbine condenser, turbine oil cooler, and deaerator vent condenser. The third system uses demineralized water as the coolant. This system supplies coolant for all the requirements inside the reactor cell (listed in Table 2.3) with the exception of the space coolers, which use potable water from the first system. These systems were described in the discussion of the flowsheets (see Sec 2.5). A detailed description of the operating procedures of the systems is available in the HRE-2 Operator's Manual.[245]

Most of the cooling surfaces located inside the HRE-2 reactor containment vessel are constructed of type 347 stainless steel because of its resistance to corrosion in the presence of the reactor process fluids. Many studies have shown that this particular material is susceptible to stress corrosion cracking in the presence of a few ppm of chloride.[258-260] Since the available water supply at the reactor site has somewhat more chloride than desirable (20 ppm vs 1 ppm), a closed-loop, demineralized-water coolant system was selected for those cooling applications inside the reactor cell involving the use of stainless steel. Heat is removed from the demineralized coolant by an open-loop, potable water system, employing a cooling tower for final heat dissipation.

Detail design considerations, including estimated cooling requirements, have been reported.[261-264] The analysis of the cooling-system requirements was based on a 10-Mw reactor power level, 80°F maximum potable water temperature, 90°F maximum cooling tower effluent temperature, and an 800-gpm cooling tower flow. Line sizes were based on a maximum flow velocity of 6 fps. A study of the induced activity in the demineralized water was made in which it was concluded that shielding would not be required around the exposed portions of the system.[261] Details of the instrumentation and controls for the water systems have been reported.[265]

A 10% phosphoric acid solution containing 0.2% "Rodine-45" inhibitor was recommended for the removal of corrosion products and other water-insoluble deposits.[250] Potassium chromate (1000 ppm) is used as a corrosion inhibitor in the closed-loop system.[266] A combination of sodium chromate (20 to 25 ppm) and potassium chromate (20 to 25 ppm) with control of the pH between 6.0 and 7.0 is used in the cooling-tower water system. Periodic additions of chlorinated phenols (about 60 ppm) to the cooling-tower basin is adequate to control the growth of algae. The amount of chlorine added (about 5 ppm) is not considered to be a problem in this system.

3.13.2 Water-Coolant Circulating Pumps

The demineralized-water coolant is circulated through the closed-loop system by a 300-gpm centrifugal pump (item 124a). A second pump (item 124b) is provided for standby service. Both are Allis-Chalmers Model 3 × 2.5 in. DHB, 3500-rpm, 300-gpm at 120-ft head, single-stage centrifugal pumps with single 6-in.-diam impellers. Each pump is driven by an Allis-Chalmers 15-hp, 3525-rpm three-phase, 220/440-v, 60-cycle, totally enclosed, fan-cooled, type 256-U induction motor operating at 440 v.

Cooling-tower water is circulated through the open-loop system by an 800-gpm centrifugal pump (item 62a). A second pump (item 62b) is provided for standby service. The pumps were obtained from plant surplus equipment and modified to meet the requirements of ORNL Specification JS-HRT-3.[6] Both are Pennsylvania Pump and Compressor Company type 6 × 5 in. BMD, 1750-rpm, single-stage, 1100-gpm at 180-ft head, centrifugal pumps with double suction impellers. The impellers were machined from 14.25 to 11.25 in. in diameter to give a capacity of 800 gpm at 110-ft head. One of the pumps is driven by a Westinghouse 30-hp, 1760-rpm, three-phase, 60-cycle, 220/440-v, type CS induction motor operating at 440 v. The other pump is driven by an Allis-Chalmers 30-hp, 1750-rpm, three-phase, 60-cycle, 220/440-v, type APWW induction motor operating at 440 v.

3.13.3 Water-Coolant Heat Exchangers

Heat is removed from the closed-loop demineralized-water coolant system in a heat exchanger unit (item 125) consisting of two tube-and-shell heat exchangers in series. Each exchanger, manufactured by Bell & Gossett Company, is a single-pass unit containing 250 $\frac{5}{8}$-in.-OD by 18-BWG (0.049 in.) by 18-ft long Admiralty tubes (735 ft^2 of outside area). The outside diameter of the shell is 16 in. and the overall length of the unit is about 21 ft. The shells, water boxes, tubesheets, and internal baffles are constructed of carbon steel. Tube and shell side design pressures are 150 psi at 375°F.

Assuming 10-Mw power level and warm weather conditions, cooling-tower water enters the heat exchange unit at 90°F, flows through the tubes at 435 gpm (velocity of 2.3 fps), and exits at 110°F. Demineralized water enters the shell side at 130°F, flows countercurrent at 300 gpm (velocity of 3.4 fps), and exits at 100°F. Under these conditions 4.5×10^6 Btu/hr of heat is transferred.

A small water heater (item 127) is used to heat a portion of the demineralized water to 160°F for use in the dump and sample coolers and the purge flow heat exchangers (see Sec 3.8.4). The heater, manufactured by the Bell & Gossett Company, is a shell and U-tube unit. Demineralized water flows through the tubes and is heated by condensing steam on the shell side. The unit is designed to heat 20 gpm of water from 60 to 160°F using 40-psig saturated steam. Tube and shell design pressures are 150 psi and 375°F.

The U-tubes are $\frac{3}{4}$-in.-OD copper; the tubesheet, shell, and baffles are carbon steel. Cast iron is used for the water box. The outside diameter of the shell is $6\frac{5}{8}$ in. and the overall length is about $6\frac{1}{2}$ ft. A safety valve, set to relieve at 125 psig, is provided on the shell side.

A similar unit (item 123) is provided to cool a portion of the demineralized water to 90°F for use in the purge pump coolers (see Sec 3.8.4). The unit is designed to cool 2 gpm of demineralized water from 100 to 90°F using 4 gpm of potable water at 80°F on the shell side.

3.13.4 Cooling Tower

Since the cost of process water at the reactor site precluded the use of a once-through coolant system, a cooling tower [ORNL Specification JS-HRT-2 (ref 6)] was selected for the final step in dissipating the heat from the coolant systems.[246] The tower (item 61) is of the induced-draft, counterflow design and is built of redwood. It is rated to cool 800 gpm of water from 135 to 90°F (7.2×10^6 Btu/hr) with air at 80°F wet-bulb temperature. The tower is 19 × 20 ft at the base and is 35 ft high. The cooling-tower fan has four blades with a tip diameter of 10 ft. It has a capacity of 115,500 cfm of air at 80°F. The fan is driven by an Allis-Chalmers 20-hp, 1800-rpm, 440-v, three-phase, induction motor through a 5-to-1 speed reducer. A 15,000-gal concrete basin provides an emergency supply of coolant and an air break in the system. Evaporation losses at 1%

per 10°F require 31.4-gpm makeup. Windage losses at 0.2% require an additional makeup of 1.6 gpm.[261] A screen pit at the bottom of basin has one 2-mesh and two 8-mesh screens to protect the circulating system from debris.

3.13.5 Space Coolers

Four space coolers (items 82a, 82b, 82c, and 82d) are provided to dissipate the heat loss to the cell from the reactor system.[267–269] Design conditions and specifications are given in ORNL Specification HRT-1069a (ref 6). Each unit is designed to remove 170,000 Btu/hr from air at 150°F and 7.5 psia using 75°F water.

Ambient air is circulated across a bank of finned tubes by a fan at a rate of 5700 cfm. The fan is driven by a 1.5-hp, 1200-rpm, type K, frame 213 P General Electric induction motor. Water circulates through the finned tubes at 25 gpm. Pressure drop across the finned tubes is 25 psi. Air is discharged downward through a diffuser at a minimum velocity of 1500 fpm. The units are suspended on frames near the top of the reactor cell so that they can be temporarily removed during maintenance operations.

3.14 REFRIGERATION-SYSTEM COMPONENTS

A refrigeration system is provided in HRE-2 to: (1) chill cold traps which dry the off-gas stream to recover D_2O and to prevent moisture from reducing the effectiveness of the charcoal adsorber beds, and (2) freeze process pipe lines at certain points where positive shutoff is required. A secondary refrigerant, Amsco 125-82, is circulated through the cold traps and line freezers. A primary refrigeration system using Freon-22 as the refrigerant cools the secondary refrigerant. In addition to the permanently installed systems, a small portable secondary refrigerant chilling system is available for temporary refrigeration of freeze units during maintenance operations.

The refrigeration system was described in Sec 2.8; only design considerations and equipment specification will be discussed nere.

The original design of the refrigeration system was based on the use of 15-hp Brunner condensing unit. However, the demands of additional freeze jackets and the substitution of Amsco for Freon-11 as the secondary refrigerant overloaded the system to the point that the Amsco was being chilled to about −15°F rather than to the design value of −30°F. The system was redesigned to increase the capacity to about 5½ tons of refrigeration at −50°F evaporator temperature.[270,271]

The system as modified employs a 25-hp, two-stage, reciprocating compressor with flash intercooling, a sub-cooler and suction-line heat exchanger, and a water-cooled condenser. The refrigeration unit, manufactured by the Brunner Division of Dunham-Bush, Inc., is rated at 68,000 Btu/hr at −50°F evaporator and 90°F condensing temperature. The two-stage compressor (item 69) has three low-pressure cylinders (4.25-in. bore × 5-in. stroke) and one high-pressure cylinder of the same dimensions. Respective volumetric efficiencies are 76.5 and 80%. The compressor is driven at 655 rpm by a 25-hp, 1750-rpm, three-phase, 60-cycle, 440-v motor, manufactured by Wagner Electric Corporation. An oil separator (item 70) is provided to remove oil from the refrigerant. An immersion-type electric heater is installed in the compressor crankcase to maintain the oil free of Freon when the compressor is not in service.

A shell-and-tube-type surface condenser (item 75) is provided for the refrigeration unit. Potable water flows through $48\frac{5}{8}$-in.-OD condenser tubes at a rate of about 20 gpm to condense the discharge vapors from the compressor.

The main evaporator (item 137) is a Heat-X, Inc., model CH-612-45BI, shell-and-fin-tube-type heat exchanger rated at 68,500 Btu/hr at −50°F evaporator temperature. The exchanger is designed for 225-psi working pressure and bears an Unfired Pressure Vessel Code stamp. The subcooler (item 135) and suction-line heat exchanger (item 136) are also Heat-X, Inc., standard units, models CH-300-36A and Zx-35 respectively. Both of these units have Unfired Pressure Vessel Code stamps.

The thermodynamic properties of Freon-22 are such that the load on the compressor motor increases with increasing evaporator temperature; as a result, capacity control and unloaded starting must be provided. Each of the compressor suction valves is fitted with a device for holding the valve open to unload the cylinder, using compressed gas from the compressor discharge as the actuating medium. Admission of gas is controlled by small solenoid valves, which receive input voltage through suction-pressure-actuated switches sensing the Amsco temperature leaving the evaporator. This arrangement is shown schematically in the flowsheet, Fig. 2.11.

On starting the compressor by means of a manual switch on the refrigeration control panel, the suction valves are held open for 30 sec to permit the motor to reach full speed. At this time one cylinder is closed and the compressor is allowed to pump the evaporator down to a pressure equivalent to about −10°F. A second cylinder is then closed and the evaporator temperature is reduced to about −30°F; at this time the third low-pressure-stage cylinder is closed and the evaporator temperature is lowered to about −60°F. The compressor continues to run at full capacity unless the temperature of the Amsco leaving the evaporator falls below about −50°F, at which point one cylinder will unload; at about −52°F a second cylinder unloads, and below about −54°F all three low-pressure cylinders are unloaded. In practice, the load on the primary system has been sufficient to make control of minimum Amsco temperature relatively unimportant.

All refrigeration lines in the primary system are hard-drawn, type L, copper tubing with silver-soldered joints. The lines are insulated with 3 to 4 in. of molded cork with a waterproof covering on the outside surface.

The entire primary refrigeration system is located external to the reactor shield where conventional refrigerants and practices can be used. This is not the case, however, for the secondary system. To satisfy the environmental requirements, a suitable secondary refrigerant for HRE-2 must have a freezing point of −40°F or lower, be resistant to radiation damage, have good heat transfer properties, be relatively noncorrosive, nontoxic, and nonexplosive, be free of chloride or fluoride ions, have a vapor pressure of 100 psi or lower at room temperature, and be amenable to low-temperature pumping.[272] Several possible refrigerants were investigated for use.[272–278] Of those refrigerants considered, Amsco 125-82, an odorless mineral spirit resembling kerosene in its physical properties, was recommended. It has a freezing point of −67°F and a viscosity of 8.2 centipoises at −40°F. It is compatible with the materials in the system, is not subject to excessive radiation damage,[278] is reasonably nontoxic, and has good heat-transfer properties.[272] Because of a relatively low flash point (128°F), a ventilating fan and a CO_2 fire control system are provided near the refrigerant circulating pump. Tests indicated no tendency for Amsco to form insoluble residues at high temperatures (550°F), which may be attained in certain freeze jackets on the process lines.[272]

Cold (−40°F) Amsco is circulated through the cold traps and freeze units by a 45-gpm, centrifugal pump (item 73). The pump, manufactured by Allis-Chalmers Manufacturing Company, delivers 45 gpm at 180-ft head. It is driven by a 5-hp, 3500-rpm, three-phase, 60-cycle, 220/440-v, General Electric Company motor. Warm Amsco, used to defrost the cold traps, is circulated through the units by a 10-gpm, centrifugal pump (item 74). This pump, also manufactured by the Allis-Chalmers Manufacturing Company delivers 10 gpm at a 44-ft head. It is driven by a 1.5-hp, 3500-rpm, three-phase, 60-cycle, 220/440-v, type K Allis-Chalmers electric motor. A 52-gal, 300-psi working pressure, storage tank (item 72) is provided for the warm Amsco system. A

100-gal, 100-psi working pressure, storage tank (item 71) is provided for the cold Amsco system. This tank is insulated with 3 in. of molded cork with a waterproof cover on the exposed surface.

Some process lines are provided with freeze coils at certain points to ensure positive shutoff of flow in the lines. In addition to these freeze units, a number of flanged joints have freeze coils to prevent entry of shield water into the reactor system when the flanges are opened for maintenance operations.[279,280] Theoretical considerations as well as mechanical design and development of freeze units have been reported in detail.[281–284]

The freeze units used in HRE-2 are classified into four types:

Type A – This type freeze unit consists of stainless steel tubing wrapped around the process pipe for about six or seven pipe diameters and welded to the pipe as shown in Fig. 3.86. This freeze unit is used on process lines which operate above 300°F and which require frequent or continuous use of the freezer.

Type B – This type freeze unit consists of copper tubing closely wrapped around the process pipe for a length of six or seven pipe diameters. They are employed at locations requiring less frequent use and which have operating temperatures less than 300°F. Although the coils are not bonded to the pipe as shown in Fig. 3.87 for a type C freeze unit, lead is used to fill the voids between the coils and process pipe in some applications.

Type C – This type of freeze unit is used at points requiring freeze plugs during maintenance operations. Unlike type A and B freeze units, the supply and return lines on type C units are not permanently connected to the secondary refrigerant circulating system. Instead, the lines terminate at disconnects at the top of the cell, which are accessible for use with temporary refrigerant lines when the shield plugs are removed. Chilled Amsco is circulated through the coils from either the secondary refrigerant system or from a portable refrigeration system, using dry ice to chill the Amsco. In general, the coils are not bonded to the process pipe as shown in Fig. 3.87. Stainless steel is used for the coils attached to process piping which operates above 300°F; copper is used otherwise.

Type D – This removable-type freeze unit, shown by Fig. 3.88, is for general purpose use during maintenance operations. It consists of two clam-shell jackets attached to an ordinary C-clamp, modified for remote manipulation. Chilled Amsco is supplied to the jackets by either of the two methods discussed above for type C units.

Rather intricately designed jackets with baffles to promote better heat transfer were tested, but it was found that the degree of contact of the jacket with the process pipe wall was of the

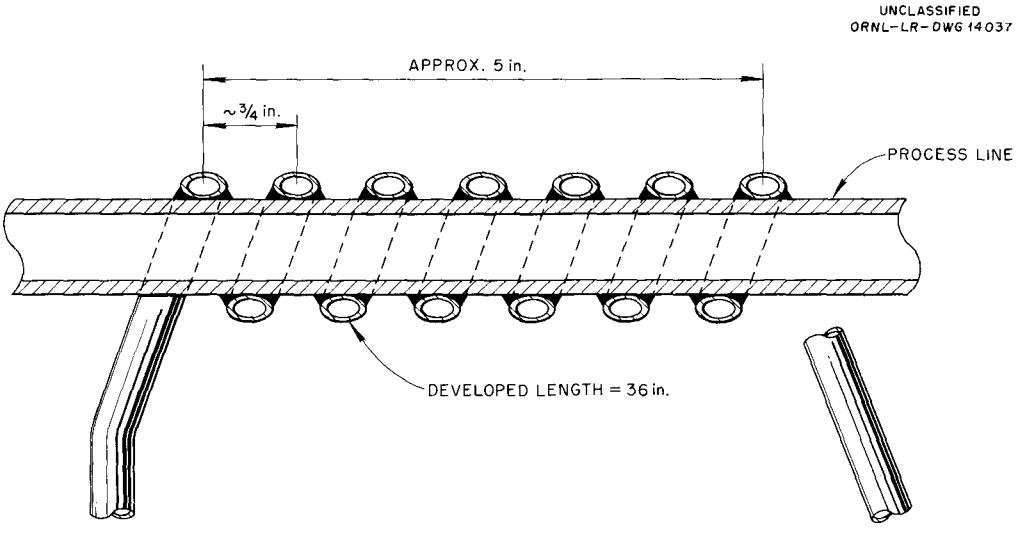

Fig. 3.86. Type-A Freeze Jacket.

UNCLASSIFIED
ORNL—LR—DWG 14038

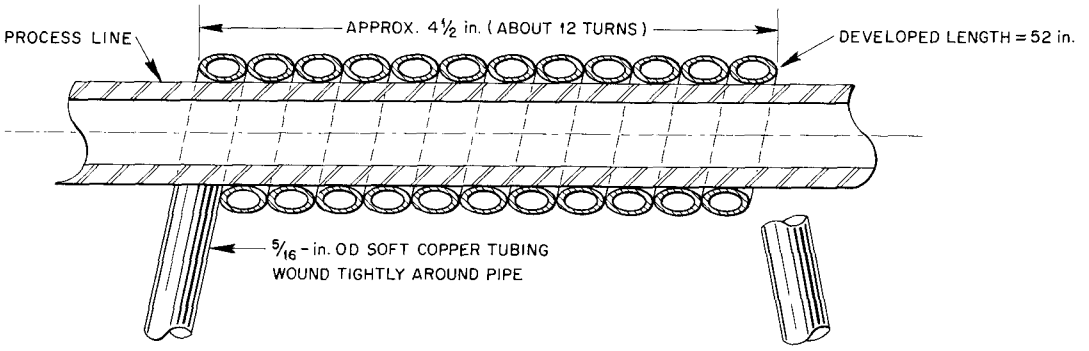

Fig. 3.87. Type-C Freeze Jacket.

UNCLASSIFIED
ORNL-LR-DWG 15498

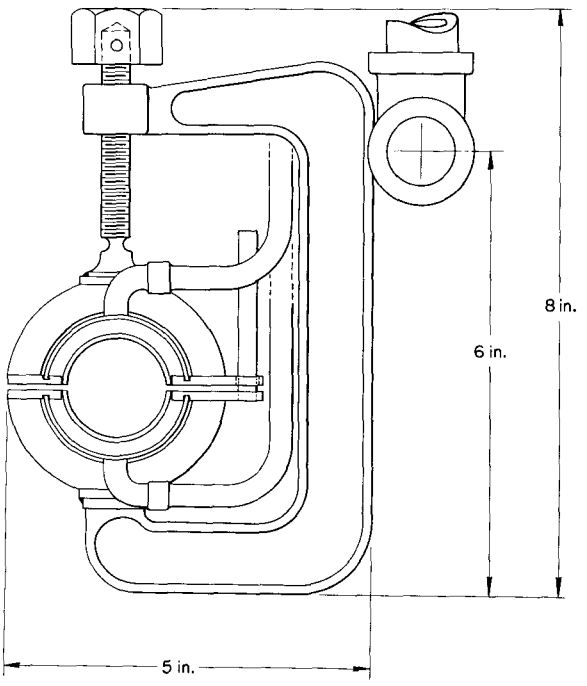

Fig. 3.88. Type-D Freeze Jacket.

greatest importance and that a simple coil of tubing wound around the pipe was essentially as effective as the more complicated designs.[283]

Each of the freeze jackets is insulated by loosely applied layers of aluminum foil, in the same manner as the process piping in the reactor cell. It has been demonstrated that a jacket can freeze a line more readily when submerged in water (i.e., when the reactor cell is flooded) than in air, provided that the aluminum foil is in place to shield the jacket from convective water currents. Ice fills the interstices between the coil and the pipe and provides a good conductive path for heat transfer and makes freeze coils not bonded to the pipe about as effective as welded types. For this reason, the type C coils, and those of the type B that would generally be used only when the cell is flooded, are not bonded to the process pipe.

The length of the freeze jackets varies from six or seven pipe diameters for the $\frac{1}{4}$- and $\frac{1}{2}$-in. line sizes to about four pipe diameters for the $3\frac{1}{2}$-in. line size. Tests on jackets indicated that above a certain minimum, length has little relation to how quickly a line can be frozen if there is no flow in the line; if there is flow, however, the longer the jacket, the more readily a solid plug can be formed.[283]

The time required to freeze a solid plug varies with the line size, the $\frac{1}{4}$- and 1-in. sizes freeze in 5 to 15 min and the $3\frac{1}{2}$-in. size requires 20 to 50 min. If a line does not freeze within these time limits, the leak rate and/or refrigerant temperature is such that a solid ice plug cannot be formed.[284]

Tests made of a type A jacket on a $\frac{1}{2}$-in. stainless steel pipe indicate that at design conditions of 2000 psi and 300°C, and with the secondary refrigerant at −40°F, a leak rate of about 11 cc/min could be stopped with the freeze coil. Reducing the temperature of the process fluid resulted in an increase in the leak rate that could be stopped. Estimated heat balances on these tests indicated that the secondary refrigerant picked up about 16 Btu/min (about $\frac{1}{12}$ ton of refrigeration) and that the process line contributed about 40% of this amount, or about 4 to 6 Btu/min. An important observation made in several tests of freeze jackets is that the temperature of the secondary refrigerant should be −40°F or lower and that a two or three degree variation in this range is important in the ability to stop flow in the line.[284]

The secondary refrigerant lines inside the reactor cell are constructed of type L, hard-drawn copper tubing with silver-soldered joints. The lines are grouped and enclosed in galvanized metal cans about 6 to 8 in. in diameter. The cans are filled with Santa-cel insulation and sealed. Provisions are made for pressurizing the insulation cans with air to prevent moisture from entering when the cell is flooded for maintenance purposes.

3.15 OXYGEN ADDITION SYSTEM

Oxygen is added to the fuel high-pressure system to prevent reduction of uranyl ions within the solution, to prevent excessive corrosion of the stainless steel system, and to act as a carrier for the gaseous fission products.[199,285,286] Oxygen addition facilities are also provided for the blanket system; however, they are not used since the initial phase of operation is based on the use of D_2O in the blanket. Although low-pressure oxygen addition was first recommended,[287] high-pressure addition was chosen to circumvent difficulties encountered with gas binding the feed pumps.[4]

Two six-cylinder manifolds, located outside the reactor building, supply oxygen through accumulators (items 67a and 67b), filters, and a metering station[288] to the discharge side of the feed pumps. The gas supply is regulated to provide 2000 psi oxygen to the metering station. A special differential-expansion-type control valve was developed for metering the gas into the system (see Sec 8.6). With standard size oxygen bottles initially charged to 2800 psig and bled down to about 2100 psig, one manifold will supply about 410 scf of oxygen. At a feed rate of $\frac{1}{2}$ liter/min, this represents about a 16-day supply.

Design requirements[183,289,290] of the oxygen addition system, based on an assumed corrosion rate of 1 mpy for stainless steel and 10 mpy for zirconium, is about 8 cc/min (STP);[8–10] however, fuel stability considerations necessitate an injection rate of about $\frac{1}{2}$ liter/min. As the result of an investigation of the oxygen depletion in stagnant fuel lines, it was recommended that the oxygen concentration in the fuel solution be at least 250 ppm.[171] The concentration of oxygen and deuterium as it enters the high-pressure circulating system was investigated and found to be well below the explosive limits.[291]

A detailed study was made to determine the effects of letdown rates and oxygen injection rates on xenon poison level and excess oxygen concentration.[199] The calculations indicated that it would be impossible, even at high oxygen injection rates, to ensure an excess of oxygen in the fuel solution if the bubble letdown rate is more than 1 or 2 liter/min. This stems from the greater solubility of deuterium than of oxygen. However, in the absence of bubble formation, a reasonable excess oxygen concentration can be maintained with an injection rate which will not tax the off-gas system.

Accumulators (items 67a and 67b) are provided in the oxygen addition lines to ensure a supply of oxygen while the manifold cylinders are being replaced. The accumulators, constructed from $3\frac{1}{2}$-in. Sched-160 pipe and pipe caps, provide a holdup volume of 28 liters, equivalent to 78 liters at STP (about $2\frac{1}{2}$-hr reserve).

3.16 SAMPLERS

3.16.1 Fuel and Blanket Samplers

Provisions are made to take representative samples of liquid and suspended solids from the fuel and blanket high- and low-pressure systems. Locations of the sampling points are shown on the system flowsheets (see chap. 2). In taking a sample from the high-pressure systems, liquid flows through the samplers (items 25 and 38) to the respective dump tanks. Samples are taken from the low-pressure systems by pressurizing the dump tanks to force flow through the respective samplers (items 18 and 44) into the transfer tanks (items 19 and 42). After the sampling is completed and the dump tank pressure is lowered, the contents of the transfer tanks are returned to the dump tanks. Design criteria, detail design, and development of the samplers have been reported.[292–294]

A heavily shielded sample station of the type shown in Fig. 3.89 is provided for each of the fuel and blanket systems. Each station contains two isolation chambers; one for isolating samples from the low-pressure system, the other for isolating samples from the high-pressure system.

In taking a sample, solution from the desired system is allowed to flow through the proper isolation chamber long enough to obtain a representative sample. The isolation chamber is then valved off, the sample is cooled to about 80°C, and the pressure is reduced to atmospheric. An evacuated sample flask is placed in the holder and lowered through the loading tube to a transfer mechanism. The assembly is indexed to the proper position and raised by a pneumatic cylinder until contact is made as shown in Fig. 3.90. Further lifting of the flask holder causes the hypodermic needle to puncture the rubber diaphragm cover on the flask and seats the carrier head against the nozzle. The sample is discharged into the flask by opening the drain valve on the isolation chamber. With the sample in the flask, the procedures are reversed and the flask holder is withdrawn into a shielded carrier for transport to an analytical laboratory. The sampler is designed to obtain sample volumes of about 5 ml.

A prototype sampler was built and tested to evaluate the design and to suggest improvements.[294] Several small modifications were suggested which greatly improved the functioning of the sampler.

3.16.2 Cell Air Monitoring

Provisions for constant monitoring of the cell air for radiation are provided by the system shown in Fig. 3.91. Cell air is circulated by a blower (item 102) past radiation detectors in the west instrument cubicle and returned to the cell. Specifications for the blower were written to provide a maximum time of 5 sec for air to traverse the distance from blanket cell to the monitors.[295]

UNCLASSIFIED
ORNL-LR-DWG 8413

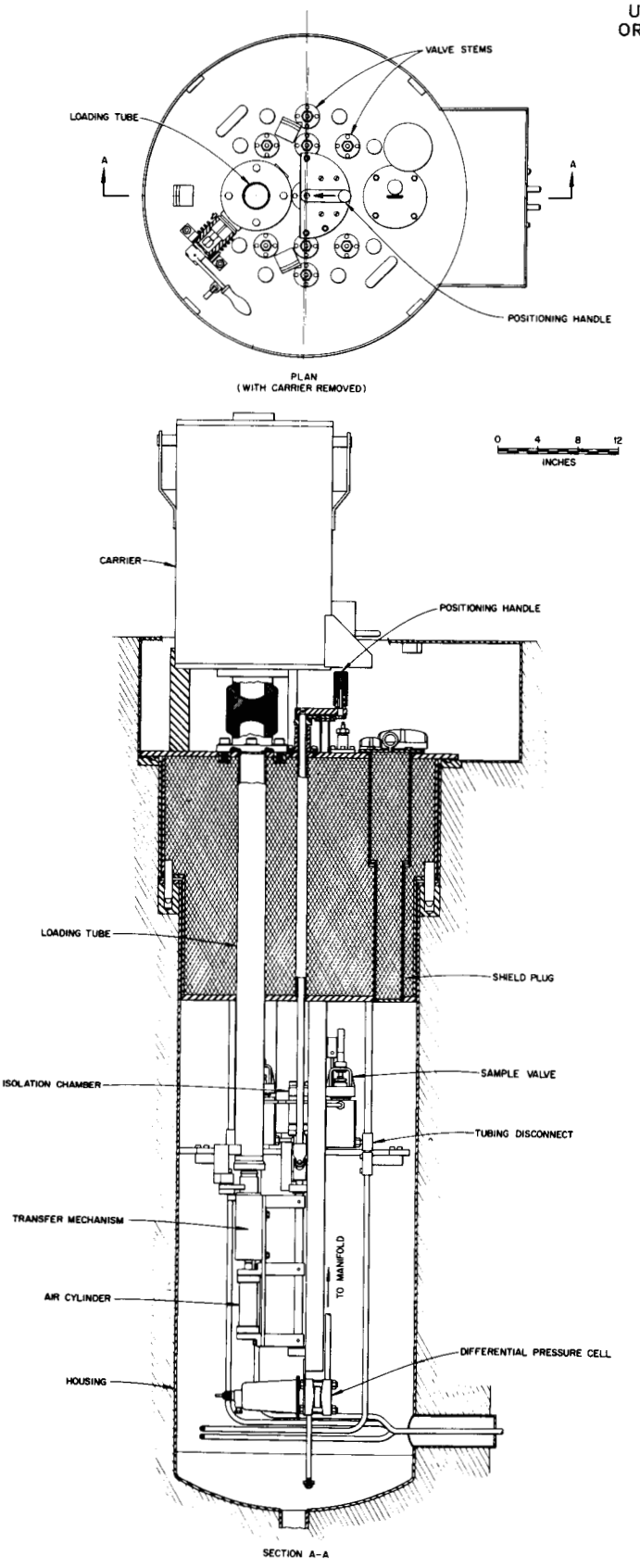

Fig. 3.89. General Assembly of Sampling Facility.

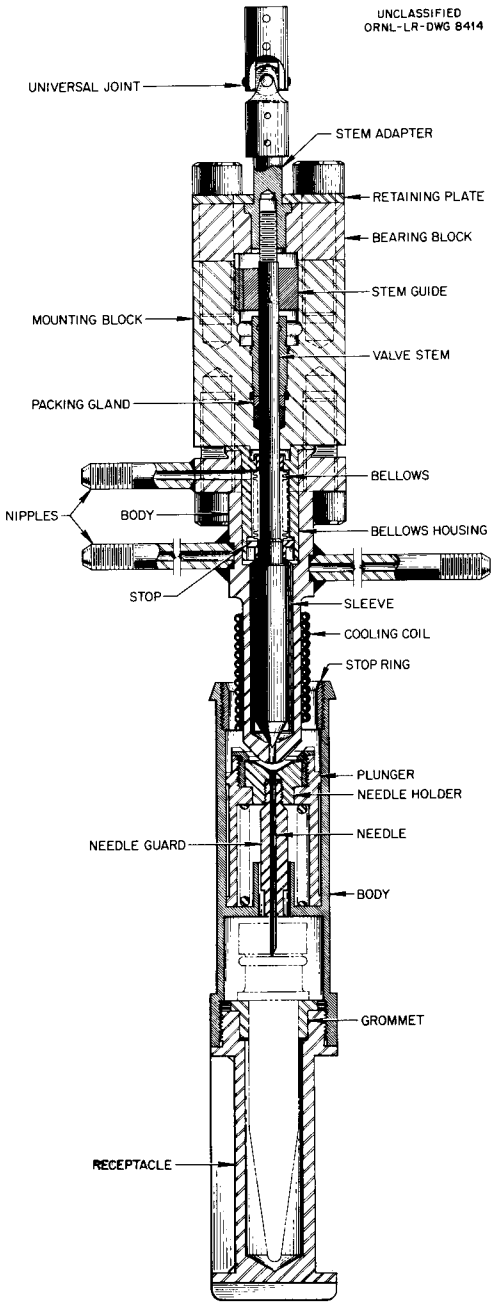

Fig. 3.90. Sample Bottle in Position to Receive Sample.

3.16.3 Steam-System Sampling

Provisions are made for taking routine samples at a number of locations in the steam system in order to maintain careful control of the chemical additions to the system.[245] At each sample station a cooler is provided to reduce the sample temperature to below 140°F. Table 3.33 gives the routine analyses made on the various samples.

UNCLASSIFIED
ORNL-LR-DWG 8412

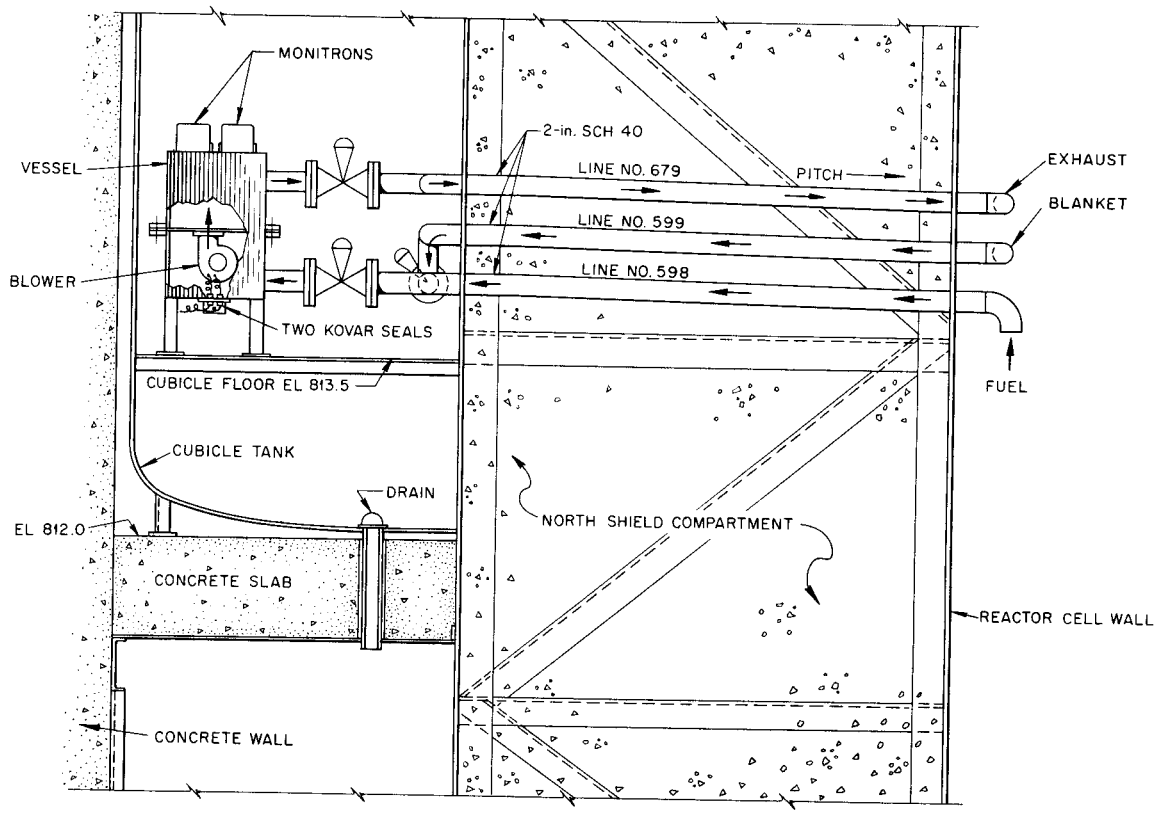

Fig. 3.91. System Cell Air Monitoring.

Table 3.33. Routine Analyses Made on Steam-System Samples

Sample Point	O_2	CO_2	Fe	Cu	Cr	Ni	PO_4	pH	NH_3	Hydrazine
Fuel heat-exchanger shell	x	x	x	x	x	x	x	x	x	x
Blanket heat-exchanger shell	x	x	x	x	x	x	x	x	x	x
Fuel heat-exchanger steam	x							x	x	
Blanket heat-exchanger steam	x							x	x	
Feed pump suction	x		x	x	x	x		x	x	x
Deaerator outlet	x	x						x		
Steam killer outlet	x		x	x	x	x		x	x	

REFERENCES

1. R. D. Satterfield, *HRT Approved Drawings – Numerical Listing as of March 1959 (Issue No. 15)*, ORNL CF-59-3-30 (Mar. 5, 1959); C. A. Burchsted, *Cross Reference Listing of HRT Equipment, Structural, and Piping Drawings*, ORNL CF-58-7-54 (July 8, 1958); D. S. Toomb, *Cross Reference Listing of HRT Instrumentation, Electrical, and Valve Drawings*, ORNL CF-57-5-63 revision II (Aug. 10, 1959).
2. I. Spiewak, *Component Development in the HRT Mockup*, ORNL CF-54-8-17 (Aug. 2, 1954).
3. I. Spiewak and D. S. Toomb, *Objectives of the HRT Mockup Loop*, ORNL CF-55-2-21 (Feb. 3, 1955).
4. H. L. Falkenberry and I. Spiewak, *Recommendations to HRT from HRT Mockup Loop*, ORNL CF-56-1-73 (Jan. 18, 1956).
5. R. B. Briggs, *Critical Concentration of U^{235} in Core of HRT*, ORNL CF-54-2-165 (Feb. 23, 1954).
6. W. R. Gall, *Specifications for HRT Reactor and Service Systems*, ORNL CF-55-8-11, Issue No. 2 (June 7, 1956).
7. Newport News Shipbuilding and Dry Dock Company Progress Reports on Pressure Vessel and Core Tank for HRT, Contract No. W40X-31990:

NNSD-7	For Period Feb. 8, 1954 to July 1, 1954
NNSD-12	For Period July 1, 1954 to Sept. 1, 1954
NNSD-14	For Period Sept. 1, 1954 to Nov. 1, 1954
NNSD-17	For Period Nov. 1, 1954 to Jan. 1, 1955
NNSD-25	For Period Jan. 1, 1955 to Mar. 1, 1955
NNSD-HRT-100	For Period Mar. 1, 1955 to May 1, 1955
NNSD-HRT-1000	For Period May 1, 1955 to July 1, 1955
NNSD-HRT-1001	For Period July 1, 1955 to Sept. 15, 1955 (Final Report)

8. D. E. Tackett (compiler), *Fabrication History of HRT Core Tank*, Newport News Shipbuilding and Dry Dock Company, Contract No. W40X-31990 (July 1, 1955).
9. Ira Joyner (compiler), *Fabrication History of HRT Pressure Vessel and Blast Shield*, ORNL CF-55-10-161 (Oct. 1, 1955).
10. D. E. Tackett (compiler), *Fabrication History of HRT Core Tank*, ORNL CF-58-12-6 (Dec. 1, 1958).
11. G. E. Elder *et al.*, "Fabrication of a Large Zirconium Tank," Nuclear Science and Science Congress, Dec. 12–16, 1955, Cleveland, Ohio, preprint 96.
12. M. C. Edlund and P. M. Wood, *Physics of Homogeneous Reactor Test – Statics*, ORNL-1780 (Aug. 27, 1954).
13. R. B. Briggs, *Aqueous Homogeneous Reactors for Producing Central-Station Power*, ORNL-1642 (May 4, 1954).
14. H. F. McDuffie, *Corrosion by Aqueous Reactor Fuel Solutions*, ORNL CF-56-11-72 (Nov. 14, 1956).
15. J. L. English, *HRP Quart. Progr. Rept. Apr. 30, 1954*, ORNL-1753, p 100.
16. Staff of the Homogeneous Reactor Project, *Thermal Breeder Reactor Program – Aqueous Homogeneous Reactors*, ORNL CF-59-7-129, pp 84–88 (July 1959).
17. G. H. Jenks, *Review and Correlation of In-Pile Zircaloy-2 Corrosion Data and a Model for the Effect of Irradiation*, ORNL-3039 (July 6, 1961).

18. G. H. Jenks, "Estimated Zircaloy-2 Corrosion Rates in the HRT," inner-office memo to C. L. Segaser, HRP-59-168 (Sept. 8, 1959).

19. Leon Cooper, *Pressure Drop and Gas Residence Time for a Four-Foot Core,* ORNL CF-52-10-38 (Oct. 4, 1952).

20. L. B. Lesem and I. Spiewak, "Straight-Through HRT Core," inner-office memo to W. R. Gall, Feb. 25, 1954.

21. P. H. Harley, *Straight-Through HRT Core Model Tests,* ORNL CF-54-9-129 (Sept. 22, 1954).

22. L. B. Lesem, *Flow Test of the Proposed ISHR Core,* ORNL CF-53-10-107 (Nov. 13, 1953).

23. I. Spiewak, *Elbow Upstream of HRT Core,* ORNL CF-54-12-174 (Dec. 30, 1954).

24. P. H. Harley and I. Spiewak, *Perforated Plates in the HRT Core,* ORNL CF-54-9-192 (Sept. 30, 1954).

25. L. B. Lesem, "Design of Diffuser-Screen Combination for the HRT Core," inner-office memo to R. B. Briggs, Aug. 4, 1954.

26. L. B. Lesem and I. Spiewak, *Alternate Core Proposal for the HRT,* ORNL CF-54-1-80 (Jan. 28, 1954).

27. L. B. Lesem and P. H. Harley, *Scale-up of Alternate HRT Core,* ORNL CF-54-5-47 (May 7, 1954).

28. P. H. Harley, L. B. Lesem, and I. Spiewak, *Flow Tests of Full Scale Alternate HRT Core Model,* memo to C. B. Graham, June 28, 1954.

29. P. N. Haubenreich, *HRT and TBR Core Tank Temperatures,* ORNL CF-55-7-78 (July 18, 1955).

30. P. N. Haubenreich, *Contribution of Beta Particles to Heating of HRT Core Tank,* ORNL CF-55-7-54 (July 15, 1955).

31. H. C. Claiborne and T. B. Fowler, *Heat Generation Rate in Core Tank of HRE-3,* ORNL CF-57-12-45 (Dec. 12, 1957).

32. F. C. Zapp and R. E. Aven, *HRT Design Data,* ORNL CF-54-8-53 revision 3 (Apr. 19, 1956).

33. C. O. Oliver, *Heat Transfer in the HRT Core (Preliminary Report),* ORNL CF-57-9-56 (Sept. 13, 1957).

34. C. C. Oliver, *Investigation of Heat Transfer in the Core of the Oak Ridge Homogeneous Reactor,* MS Thesis presented to Georgia Institute of Technology (June 1958).

35. R. D. Cheverton, *Experimental Stress Analysis of HRT Core Tank,* ORNL CF-54-3-18 (Mar. 5, 1954).

36. R. B. Briggs *et al., HRP Quart. Progr. Rept. Oct. 31, 1954,* ORNL-1813, pp 24–25.

37. R. D. Cheverton, *Allowable Pressure Differential for HRT Core Vessel,* ORNL CF-57-9-36 (Sept. 13, 1957).

38. R. E. Morris, *Tests of Special Materials, Final Report,* Auburn Research Foundation (Mar. 20, 1957).

39. R. D. Cheverton, unpublished calculations.

40. R. D. Cheverton, "HRT Core Vessel Stresses of Intersection of Ninety-Degree and Sixty-Degree Cones," inner-office memo to R. B. Briggs, Apr. 10, 1958.

41. R. H. Chapman and R. D. Cheverton, unpublished calculations.

42. R. B. Briggs *et al., HRP Quart. Progr. Rept. Apr. 30, 1954,* ORNL-1753, pp 22–30.

43, R. B. Briggs *et al., HRP Quart. Progr. Rept. Oct. 31, 1954,* ORNL-1853, pp 7–11.

44. J. C. Wilson, *Radiation Effects in Pressure Vessel Materials and Welds,* ORNL CF-54-10-102 (Nov. 15, 1954).

45. R. G. Berggren and J. C. Wilson, *Recent Data on the Effects of Neutron Irradiation on Structural Metals and Alloys,* ORNL CF-56-11-1 (Jan. 30, 1957).

46. W. R. Gall, *Newport News Drawings of the Pressure Vessel,* ORNL CF-55-1-99 (Jan. 20, 1955).

47. P. R. Kasten, *Design of HRT,* ORNL CF-54-2-7 (Feb. 1, 1954).

48. R. D. Cheverton, "Endurance Test, Zallea Bros., Expansion Joint," inner-office memo to W. R. Gall, June 28, 1955.

49. T. H. Mauney *et al., Operating Test of HRT Core Vessel Transition Joint and Expansion Bellows Mockup,* ORNL CF-57-1-68 (Jan. 31, 1957).

50. R. S. Greeley *et al., Second and Third Operating Test of HRT Core Vessel Transition Joint and Expansion Bellows Mockup,* ORNL CF-57-4-44 (Apr. 30, 1957).

51. J. C. Griess *et al., Quarterly Report of the Solution Corrosion Group for the Period Ending July 31, 1957,* ORNL CF-57-7-121 (July 31, 1957).

52. J. C. Griess *et al., Quarterly Report of the Solution Corrosion Group for the Period Ending October 31, 1957,* ORNL CF-57-10-80 (Oct. 31, 1957).

53. Bulletin No. 11, *NMI Stainless Steel – Zircaloy Tubular Transition Joint,* Nuclear Metals, Inc., Concord, Mass.

54. C. L. Segaser, *Zircaloy-to-Stainless Steel Transition Pipe Joint Design Study,* ORNL CF-55-12-72 (Dec. 5, 1955).

55. R. D. Cheverton and T. H. Mauney, *Design and Analysis of a Mechanical Transition Joint Between Dissimilar Materials – Application to HRT,* ORNL CF-58-9-1 (Sept. 15, 1958).

56. R. H. Chapman, *Analysis of Spherical Pressure Vessel Having an Energy Source Within the Wall,* ORNL-1987 (Oct. 26, 1954).

57. R. D. Cheverton, *Stresses Caused by Internal Pressure and Uniform Temperature Changes in Clad Spherical Vessels,* ORNL CF-57-12-66 (Dec. 17, 1957).

58. R. E. Aven, *Heat Removal Systems for the HRT Pressure Vessel,* ORNL CF-55-3-119 (Mar. 14, 1955).

59. R. E. Aven, *Some Heat Removal Considerations of the HRT Pressure Vessel During Operation,* ORNL CF-55-7-64 (July 15, 1955).

60. R. D. Cheverton and E. R. Volk, *Steady-State Pressure and Thermal Stresses in the HRT Pressure Vessel,* ORNL CF-58-7-43 (July 15, 1958).

61. R. E. Aven, *HRT Pressure Vessel Temperatures During Operation – An Evaluation Using Data from Run 16,* ORNL CF-58-7-35 (July 9, 1958).

62. P. M. Wood, *Heating and Thermal Stress in HRT Pressure Vessel During Shutdown,* ORNL CF-54-7-158 (July 27, 1954).

63. R. E. Aven, *Thermal Stress in the HRT Pressure Vessel,* ORNL CF-55-2-128 (Feb. 21, 1955).

64. E. C. Miller, *HRT Reactor Hazards,* ORNL-2089 (July 27, 1956).

65. E. C. Miller, *Possibility of Brittle Pressure Vessel Failure,* ORNL CF-54-4-112 (Apr. 16, 1954).

66. P. M. Wood, *A Study of the Possible Blast Effects from HRT Pressure Vessel Rupture,* ORNL CF-54-12-100 (Dec. 14, 1954).

67. R. H. Chapman, *HRT Blast Shield Design Criteria,* ORNL CF-55-4-27 (Apr. 5, 1955).

68. P. R. Kasten, *Holding Force Required for HRT Pressure Vessel,* ORNL CF-55-5-166 (May 25, 1955).

69. F. C. Zapp, *HRT Corrosion Sample Holders,* ORNL CF-56-2-35 (Feb. 8, 1956).

70. R. E. Aven, *Estimates of Temperature Rise and Pressure Drop Effects of Sample Holder in the HRT Core,* ORNL CF-56-7-87 (July 17, 1956).

71. I. Spiewak, *Estimates of HRT Core Sample Temperature,* ORNL CF-57-3-22 (Mar. 7, 1957).

72. B. A. Hannaford, *Effect of HRT Core Sample Holder on Core Flow Pattern and Pressure Drop,* ORNL CF-57-2-9 (Feb. 4, 1959).

73. E. H. Gift, *Induced Activity in HRT Core Specimen Holders,* ORNL CF-56-10-129 (Oct. 30, 1956).

74. F. C. Zapp, R. G. Pitkin, and C. J. Claffey, *Stepwise Procedures for Remote Handling for Rupture Disk Assembly and Fuel and Blanket Sample Holders,* ORNL CF-57-11-1 (Nov. 15, 1957).

75. *Gas Pressurization of Homogeneous Reactor Test,* AECU-3349 (Feb. 14, 1956).

76. P. R. Kasten, *Design Basis for Volume of Pressurizer in HRT,* ORNL CF-54-5-188 (May 24, 1954).

77. P. R. Kasten, *Mechanical Pressurizer as an HRT Safety Device,* ORNL CF-54-4-228 (Apr. 22, 1954).

78. R. E. Aven, *Survey of Gas Pressurization for the HRT,* ORNL CF-56-3-17 (Mar. 30, 1956).

79. C. B. Graham *et al., HRP Quart. Progr. Rept. Jan. 31, 1956,* ORNL-2057, pp 25–30.

80. B. A. Hannaford, *Fluid Flow in HRT Pressurizer,* ORNL CF-53-9-178 (Sept. 24, 1954).

81. P. H. Harley, *Fluid Flow in HRT Pressurizer, Report No. 2,* ORNL CF-54-11-56 (Nov. 11, 1954).

82. S. E. Beall, *HRT Pressurizer and Pressurizer Auxiliaries,* ORNL CF-56-1-71 (Jan. 14, 1956).

83. C. Michelson, *HRT Modified Pressurizer Design,* ORNL CF-56-5-165 (May 25, 1956).

84. R. E. Aven, *Purge Water Required for Absorption of Radiolytic Gas Generated in Pressurizer,* ORNL CF-55-8-107 (Aug. 16, 1955).

85. R. E. Aven and P. N. Haubenreich, *Radiolytic Gas Generation Rates in the HRT,* ORNL CF-55-8-77 (Aug. 31, 1955).

86. P. R. Kasten, *HRT Pressurizer Design,* ORNL CF-56-2-69 (Feb. 16, 1956).

87. R. D. Cheverton, *Thermal Stresses in Externally Heated and Cooled Cylinders,* ORNL CF-57-10-128 (Oct. 23, 1957).

88. J. A. Hafford and I. Spiewak, *HRT Pressurizer Heater,* ORNL CF-54-9-25 (Sept. 2, 1954).

89. R. F. Hughes, *Efficiency of HRT Pressurizer Heater Insulation,* ORNL CF-56-11-90 (Nov. 13, 1956).

90. H. A. McLain, *HRT Pressurizer Heater Test,* ORNL CF-56-11-113 (Nov. 21, 1956).

91. M. C. Lawrence, *Pressurizer Thermal Insulation,* ORNL CF-56-5-55 (May 1, 1956).

92. R. B. Korsmeyer, *HRT Pressurization Control – Meeting No. 1,* ORNL CF-56-3-11 (Mar. 2, 1956).

93. R. B. Korsmeyer, *HRT Pressurization Control – Meeting No. 2,* ORNL CF-56-3-37 (Mar. 8, 1956).

94. M. I. Lundin, *Design Criteria – HRT Pressurization Control,* ORNL CF-56-4-55 (Apr. 10, 1956).

95. R. E. Aven and M. W. Rosenthal, *Delay Time Required to Reduce D_2 Explosion Hazard During HRT Dump,* ORNL CF-56-5-40 (May 1, 1956).

96. M. W. Rosenthal and H. C. Claiborne, *Effect of Heat Generation on Dumping of HRT,* ORNL CF-55-12-48 (Dec. 7, 1955).

97. M. W. Rosenthal and H. C. Claiborne, *Effects of Heat Generation and Heat Removal on HRT Shutdown and Dump,* ORNL CF-56-2-128 (Feb. 8, 1956).

98. H. A. McLain, *HRT Core and Blanket Vent Piping (Lines 127 and 227),* ORNL CF-56-4-188 (Apr. 30, 1956).

99. L. C. Wilbur, *Time Required for Venting the HRT Pressurizer During a Dump,* ORNL CF-56-9-2 (Sept. 4, 1956).

100. E. H. Gift and H. A. McLain, *Delay Time Prior to Dumping the HRT,* ORNL CF-57-1-103 (Jan. 10, 1957).

101. H. A. McLain, *Possibility of Interconnecting the HRT Pressurizers with an Open Line,* ORNL CF-57-7-68 (July 17, 1957).

102. R. F. Hughes, *Fluid Motion in "U"-Tubes of Variable Cross Section (HRT Level Indicator),* ORNL CF-56-10-23 (Oct. 2,1956).

103. R. F. Hughes, *Effect of Gas Sampling on the HRT Level Control,* ORNL CF-56-10-50 (Oct. 15, 1956).

104. W. J. Finan and I. Granet (compilers), *Fabrication History – Final Report on Union Carbide Nuclear Company Contract No. W-35X-31312,* ORNL-HRT-1004a (Foster Wheeler Job No. 8-51-8531-2), ORNL CF-56-12-147 (Dec. 15, 1956).

105. H. H. Sieber and W. R. Apblett, *Welding Procedure Development for Tube-to-Tubesheet Joints in Heat Exchangers,* Foster Wheeler Welding Research Laboratory Report WLR-42.03 on Job No. 8-51-8527, UCNC Contract No. W35X-31312 (Mar. 1, 1958).

106. C. L. Segaser, *Calculations for HRE-2 Heat Exchanger,* ORNL CF-53-12-94 (Dec. 16, 1953).

107. C. L. Segaser, *Calculations for HRT Main Heat Exchanger – Supplement to CF-53-12-94,* ORNL CF-54-2-72 (Feb. 2, 1954).

108. C. L. Segaser, *Estimate of Performance of HRT Main Fuel Solution Heat Exchanger in Proposed HRT Blanket Loop,* ORNL CF-54-4-216 (Apr. 7, 1954).

109. R. B. Briggs and F. C. Zapp, *HRT Design Request No. 3 – Steam Power System,* ORNL CF-54-4-93 (Apr. 15, 1954).

110. E. A. Mason, *Final Process Design for Leak Detector System for Special Flanges,* ORNL CF-57-5-96 (May 29, 1957).

111. P. P. Holz, *Test to Determine Velocity of Leakage Across the Pass Partition of the HRT Heat Exchanger,* ORNL CF-56-1-31 (Jan. 5, 1956).

112. E. G. Bohlmann, *Crevice Between Heat Exchanger Tubes and Tube Sheet in HR Heat Exchangers,* ORNL CF-55-3-123 (Mar. 18, 1955).

113. E. G. Bohlmann, *HRT Heat Exchanger Cleaning,* ORNL CF-56-1-24.

114. P. P. Holz, *HRT Heat Exchangers – Cleaning Runs Performed at Y-12,* ORNL CF-56-3-135 (Mar. 20, 1956).

115. H. F. McDuffie, *Fabrication and Inspection History of HRT Heat Exchanger Tubing,* ORNL CF-55-1-50 (Jan. 12, 1955).

116. L. F. Goode and W. L. Ross, *HRP Quart. Progr. Rept. Apr. 30, 1955*, ORNL-1895, p 134.

117. C. B. Graham *et al.*, *HRP Quart. Progr. Rept. July 31, 1955*, ORNL-1943, pp 151–153.

118. C. L. Segaser, *A Study of the Design Criteria for a Proposed HRT Heat Exchanger Blast Shield*, ORNL CF-55-7-84 (July 18, 1955).

119. C. L. Segaser, *Estimate of O_2 Generated from Radiolytic Decomposition of Boiler Water in the Fuel Solution Heat Exchanger of the HRT at 5 Mw Operation*, ORNL CF-54-5-100 (May 18, 1954 and errata data June 10, 1954).

120. R. B. Korsmeyer, *Chemical Treatment for the HRT Steam System*, ORNL CF-54-6-232 (June 30, 1954).

121. H. A. McLain, *Treatment of the HRT Steam System Water*, ORNL CF-56-11-132 (Nov. 29, 1956).

122. R. C. Robertson, *Study of Effect of Sudden Heating or Cooling in HRT Main Heat Exchangers and Possible Protective Measures*, ORNL CF-55-11-42 (Nov. 1, 1955).

123. R. Van Winkle, *Use of HRE Tube Bundle as Feedwater Heater for HRT*, ORNL CF-54-12-173 (Dec. 14, 1954).

124. P. R. Kasten and R. S. Stone, *Cooling of HRT Fuel Solution as a Result of Changing Heat Exchanger Operating Conditions*, ORNL CF-55-4-19 (Apr. 1, 1955).

125. R. C. Robertson, *Gravity Return of Condensate from HRT Steam Drum to Main Heat Exchanger*, ORNL-CF-54-8-26 (Aug. 2, 1954).

126. Staff of the Homogeneous Reactor Project, *Thermal Breeder Reactor Program – Aqueous Homogeneous Reactors*, ORNL CF-59-7-129, pp 132, 212 (July 1959).

127. H. F. Bauman *et al.*, *Summary of HRT Run 19*, ORNL CF-61-3-86 (Mar. 16, 1961).

128. E. H. Gift, *Possible Radiation Damage to the Stator Windings of the HRT Circulating Pump*, ORNL CF-57-4-80 (Apr. 17, 1957).

129. J. R. Engel, *Radiation Level in the Stator Region of the HRT Fuel Circulating Pump*, ORNL CF-57-7-25 (July 3, 1957).

130. H. A. Rundell, D. H. Roy, and J. C. Moyers, *Investigation of Effect of Seal Configuration on Mixing Flow and Radiation Damate in HRT-Type Circulating Pumps*, ORNL CF-57-10-48 (Oct. 10, 1957) and suppl No. 1 (Jan. 13, 1958).

131. H. R. Payne, *Investigation of the Effect of Radiation on the Electrical Resistance of Class H Motor Insulation*, ORNL CF-60-6-131 (Jan. 15, 1960).

132. J. L. Redford, *Slow Startup of 400A Westinghouse Pump*, inner office memo to distribution, Nov. 19, 1954.

133. J. C. Moyers, *Long-Term Run of Westinghouse 400A-1 Pump*, ORNL CF-57-9-1 (Sept. 3, 1957).

134. H. R. Payne, *Gas Saturated Run on the 400A-1 Pump*, ORNL CF-58-2-25 (Feb. 10, 1958).

135. J. C. Moyers, *Investigation of Effectiveness of HRT System for Venting Gas from Back of Fuel and Blanket Circulating Pumps*, ORNL CF-57-7-108 (July 29, 1957).

136. R. E. Aven, *Gas Separator for the HRT*, ORNL CF-54-6-161 (June 18, 1954).

137. J. A. Hafford, *HRT Gas Separator*, ORNL CF-54-6-112 (June 14, 1954).

138. J. A. Hafford and J. W. Skillern, *Test of Titanium Sleeve in HRT Gas Separator*, ORNL CF-54-12-163 (Dec. 27, 1954).

139. J. O. Bradfute, *ISHR Gas Separator*, ORNL CF-52-5-235 (May 21, 1952).

140. R. E. Aven, *Length of Gas Separator for ISHR*, ORNL CF-53-7-136 (July 21, 1953).

141. J. A. Hafford, *Development of the Pipe Line Gas Separator,* ORNL-1602 (Feb. 18, 1954).

142. J. A. Hafford, *Large Scale Gas Separators,* ORNL CF-55-7-67 (July 20, 1955).

143. J. A. Lane (ed.), *Aqueous Fuel Systems,* ORNL CF-57-12-49 (December 1957).

144. W. L. Carter and F. C. McCullough, *HRP-CP: An Analysis of the Gas Separator for Use as a Solids Concentrator,* ORNL CF-56-9-24 (Sept. 4, 1956).

145. J. M. Smith and D. L. Katz, *Performance of the Letdown System of the HRE,* ORNL CF-51-8-287 (Aug. 30, 1951).

146. C. D. Zerby, *Design of Smoothly Flowing Gas and Liquid Mixtures,* ORNL CF-51-10-130 (Oct. 11, 1951).

147. R. Van Winkle, *Fuel Letdown Heat Exchanger,* ORNL CF-54-9-143 (Sept. 20, 1954).

148. R. Van Winkle, *Fluid Velocities in HRT Letdown Heat Exchanger,* ORNL CF-54-7-128 (July 26, 1954).

149. H. F. Bauman *et al., Summary of HRT Runs 22, 23, and 24,* ORNL TM-106 (Mar. 6, 1962).

150. W. J. Werner and T. M. Kegley, Jr., *Metallographic Examination of HRT Mockup Letdown Heat Exchanger,* HRP-MET-10 (Mar. 28, 1958).

151. B. D. Draper and H. C. Roller, *Design and Development of a ½-in. Titanium-to-Stainless Steel Flange,* ORNL CF-57-11-140 (Nov. 27, 1957).

152. P. H. Harley, *Core Solution System, Run 22,* ORNL CF-58-7-61 (July 21, 1958).

153. R. B. Korsmeyer and P. H. Harley, *Operation of the HRT Mockup with Boiling Fuel in a Titanium Pressurizer, Run CS-23,* ORNL CF-59-5-13 (May 19, 1959).

154. R. Blumberg *et al., Diaphragm Feed Pump Development Program Progress Report,* ORNL CF-56-10-114 (Oct. 29, 1956).

155. E. C. Hise, *Design, Development and Operation of Metal-Diaphragm Reactor-Service Pumps,* ORNL-2841 (Apr. 26, 1960).

156. P. N. Stevens, *Pulsafeeder Diaphragm Studies,* inter-company memo to C. B. Graham, Sept. 24, 1953.

157. R. D. Cheverton, *Maximum Volume-to-Stress Ratio for a Two-Radii-Contour Diaphragm Pump,* ORNL-2814 (Feb. 1, 1960).

158. R. D. Cheverton, *Pulsafeeder Pump Experimental Stress Analysis,* ORNL CF-54-11-184 (Nov. 22, 1954).

159. E. L. Youngblood, *Feed Pump Mockup,* ORNL CF-55-2-52 (Feb. 9, 1955).

160. E. L. Youngblood, *Feed Pump Operating Characteristics,* ORNL CF-54-9-139 and suppl (Sept. 10, 1954); suppl to ORNL CF-54-9-139 (Oct. 5, 1954).

161. H. L. Falkenberry and I. Spiewak, *Pulsafeeder and Purge Pump Failures on the HRT Mockup,* ORNL CF-56-3-173 (Mar. 1, 1956).

162. P. F. Pasqua, *Electrical Simulation of Diaphragm Feed Pump System,* ORNL CF-58-5-81 (May 22, 1958).

163. H. R. Payne, *Modification of Oil Control Valve in Scott and Williams P-9 Pulsator Drive,* ORNL CF-58-1-65 (Jan. 14, 1958).

164. E. C. Hise, *Stresses and Deflections in Seal Welding a Diaphragm Pump,* ORNL CF-57-9-55 (Sept. 18, 1957).

165. F. H. Beck, *Fatigue and Corrosion Fatigue of Stainless Steel by Uranyl Sulfate,* Engineering Experiment Station, Ohio State University (May 14, 1958).

166. R. Blumberg, *Evaluation of Check Valve Materials in Uranyl Sulfate and in Distilled Water,* ORNL CF-57-12-72 (Dec. 17, 1957).

167. R. Blumberg, *Further Evaluation of Check Valve Material for the Homogeneous Reactor Program,* ORNL CF-59-8-135 (Aug. 4, 1959).

168. P. H. Harley, *Feed Pump and Purge Water Flow Measurements,* ORNL CF-56-5-169 (May 24, 1956).

169. P. M. Wood, *Possibility of Peroxide Precipitation in the HRT Dump and Sampler Lines,* ORNL CF-54-11-172 (Nov. 29, 1954).

170. W. R. Gall *et al., HRP Quart. Progr. Rept. July 31, 1955,* ORNL-1943, pp 8–9.

171. E. H. Gift, *Possibility of Oxygen Depletion in Stagnant Uranyl Sulfate Lines,* ORNL CF-57-4-128 (Apr. 29, 1957).

172. P. N. Haubenreich, *The Flow of a Flashing Mixture of Water and Steam at High Pressures,* ORNL CF-55-5-200 (May 16, 1955).

173. R. Van Winkle, *Design Criteria for HRT Sample Line Cooler,* ORNL CF-55-1-29 (Jan. 5, 1955).

174. R. Van Winkle, *Fuel Feed Cooler (Item 17),* ORNL CF-55-5-43 (May 5, 1955).

175. R. Van Winkle, *Blanket Feed Cooler (Item 40),* ORNL CF-55-5-124 (May 18, 1955).

176. R. G. Pitkin, *Inner Dump Tanks, Their Piping and Supports,* ORNL CF-54-8-167 (Aug. 17, 1954).

177. R. G. Pitkin, *Inner Dump Tank Piping and Weighing System,* ORNL CF-54-10-63 (Oct. 13, 1954).

178. R. B. Briggs *et al., HRP Quart. Progr. Rept. Apr. 30, 1955,* ORNL-1895, p 3.

179. R. E. Aven, *Decomposition Gases Released During a Dump of HRT,* ORNL CF-54-6-222 (June 25, 1954).

180. J. R. Hill, Jr., *Volumes of HRT Dump Tanks and High-Pressure Systems,* ORNL CF-54-7-120 (July 22, 1954).

181. C. C. Cardwell and P. N. Haubenreich, *Results of HRT Test IB 5a, Volume Calibration of Fuel High-Pressure System,* ORNL CF-56-7-116 (July 30, 1956).

182. N. W. Curtis and P. N. Haubenreich, *Results of HRT Test III B 5a, Volume Calibration of Blanket High-Pressure System,* ORNL CF-56-7-117 (July 30, 1956).

183. R. Van Winkle, *Tabulation of Line Lengths, Areas, and Volumes in the HRT Fuel and Blanket Low-Pressure Systems,* ORNL CF-58-4-126 (Apr. 22, 1958).

184. S. Visner, *Fuel Dump Tanks for HRT,* ORNL CF-54-4-30 (Apr. 2, 1954).

185. S. Visner, *Dump Tanks for HRT Blanket,* ORNL CF-54-6-16 (June 3, 1954).

186. S. Visner and L. C. Noderer, *Criticality of U^{235}-H_2O-D_2O Systems in Cylindrical Geometry,* ORNL CF-54-5-170 (May 20, 1954).

187. P. N. Haubenreich, *Preliminary Calibration of Fuel Dump Tanks, HRT Report II A (7) c,* ORNL CF-55-12-23 (Dec. 6, 1955).

188. C. L. Segaser, *Study of Dump Times, Equilibrium Pressures and Minimum Discharge Capacities of Proposed Low Pressure Dump Tank Systems,* ORNL CF-54-4-220 (Apr. 6, 1954).

189. R. Van Winkle, unreported calculations.

190. C. L. Segaser, *HRT Evaporator Design Study,* ORNL CF-54-5-2 (May 3, 1954).

191. C. L. Segaser, *Continuation of HRT Fuel Solution Evaporator Study,* ORNL CF-54-6-31 (June 4, 1954).

192. C. L. Segaser, *HRT Entrainment Separator Design Study,* ORNL CF-54-7-122 (July 23, 1954).

193. R. H. Wilson, *Pressure Drop Across Wire Mesh Packing,* ORNL CF-53-7-198 (July 30, 1953).

194. P. F. Pasqua, *Report on Analysis of Data Obtained from the HRT Dump Test – Phase I,* ORNL CF-55-10-4 (Oct. 6, 1955).

195. C. H. Gabbard, *HRT Dump Test, Phase II,* ORNL CF-56-10-43 (Oct. 4, 1956).

196. P. H. Harley and I. Spiewak, *Performance Test of HRT Fuel Solution Evaporator,* ORNL CF-54-8-232 (Aug. 13, 1954).

197. P. H. Harley, *Performance Tests of HRT Fuel Solution Evaporator and Entrainment Separator,* ORNL CF-54-10-51 (Oct. 13, 1954).

198. P. H. Harley, *Simulated Dump Test of Entrainment Separator,* ORNL CF-54-10-122 (Oct. 22, 1954).

199. P. N. Haubenreich, *Effects of Letdown Rates and Oxygen Injection Rates on Xenon Poison Level and Excess Oxygen Concentration in the HRT,* ORNL CF-57-5-100 (May 31, 1957).

200. E. H. Gift, *HRT Iodine Removal Bed,* ORNL CF-57-9-50 (Sept. 10, 1957).

201. S. E. Beall *et al., HRP Quart. Progr. Rept. Jan. 31, 1958,* ORNL-2493, p 3.

202. E. H. Gift, *Predicted Behavior of Silvered Wire Mesh in Iodine Trap,* inter-office memo to S. E. Beall, Nov. 12, 1957.

203. R. Van Winkle, *Suggested Value for Maximum Pressure Drop Across Iodine Absorption Unit for HRT Line 115,* inner-office memo to E. H. Gift, July 1, 1957.

204. P. H. Harley, *HRT Mockup Iodine Removal and Recombiner Tests,* ORNL CF-58-1-138 (Jan. 13, 1958).

205. R. A. McNees, *Behavior of Silvered Yorkmesh Wire Under a Variety of Simulated Reactor Conditions,* ORNL CF-58-2-38 (Feb. 11, 1958).

206. T. M. Kegley and T. J. Henson, *Silverplated 304 Stainless Steel Wire Mesh (I_2 Trap) from HRT Mockup. Metallography (Y-12) Report No. 77,* inner-office memo HRP-MET-14 (Apr. 29, 1958).

207. P. N. Haubenreich, *Problem of Gas Recombination Caused by Initial Operation at Reduced Temperature,* ORNL CF-56-7-62 (July 17, 1956).

208. R. E. Aven, *HRT Recombiner Condenser Design,* ORNL CF-54-11-1 (Nov. 1, 1954).

209. H. A. McLain, *After Recombiners for the HRT,* ORNL CF-57-8-78 (Aug. 15, 1957).

210. B. A. Hannaford, *Test of HRT Recombiners,* ORNL CF-57-9-98 (Sept. 20, 1957).

211. O. A. Hougen and K. M. Watson, *Chemical Process Principles,* vol III, pp 902–10 Wiley, New York, 1947.

212. D. W. Kuhn *et al., Explosion Limits in Mixtures of Hydrogen, Oxygen, Steam and Helium,* Y-731 (Mar. 1, 1951).

213. D. W. Kuhn, A. D. Ryon, and A. A. Palko, *The Reaction Between Hydrogen and Oxygen by Catalysis and the Thermal Reaction,* ORNL-1209 (Jan. 15, 1952).

214. T. W. Costikyan, C. B. Hanford, and D. L. Johnson, *The Catalytic Recombination of Hydrogen and Oxygen,* KT-130 (June 2, 1952).

215. J. V. Gaven, R. B. Bacastow, and A. C. Herrington, *Catalytic Recombination of Hydrogen and Oxygen, Number II,* KT-134 (Aug. 29, 1952).

216. J. A. Ransohoff and Irving Spiewak, *Development of Hydrogen-Oxygen Recombiners – Progress Report,* ORNL-1583 (Oct. 12, 1953).

217. R. Van Winkle, *Specification of Pipe Size for Lines 119 and 122 (Line Between Recombiner and Condenser and the Condensate Tank),* ORNL CF-55-5-94 (May 13, 1955).

218. H. E. Williamson, *Recombiner Condenser Capacity as Limited by Condensate Removal Rates,* ORNL CF-56-5-109 and addendum (May 15, 1956).

219. R. B. Briggs and J. W. Hill, *HRT Design Request No. 4 – Cold Traps,* ORNL CF-54-4-152 (Apr. 23, 1954).

220. R. B. Briggs, *Modification of the Cold Trap for the HRT,* ORNL CF-54-9-72 (Sept. 14, 1954).

221. J. A. Lane (ed.), *Reactor Handbook, Volume II – Section D, Chapter 19,* ORNL CF-57-12-49.

222. R. Van Winkle, *Heating in HRT Cold Traps from Radioactive Fission Product Gases,* ORNL CF-55-7-141 (July 28, 1955).

223. P. N. Haubenreich and T. W. Leland, *Contribution of Radioactive Fission Products to Heat Transferred in Cold Traps,* ORNL CF-54-7-115 (July 20, 1954).

224. W. M. Murray, Jr., *et al., HRT Cold Trap Test,* KT-211 (July 6, 1955).

225. C. L. Segaser, *Emergency Condenser Calculations,* ORNL CF-54-4-114 (Apr. 15, 1954).

226. C. L. Segaser, *Bayonet Tube Reflux Condenser for the HRT Outer Dump Tanks,* ORNL CF-55-1-49 (Jan. 4, 1955).

227. R. E. Aven, *Gaseous Radioactivity from HRT Fuel Storage Tanks,* ORNL CF-56-6-142 (June 22, 1956).

228. W. R. Gall and R. E. Aven, *Outer Dump Tank Recombiner Program,* ORNL CF-55-5-187 (May 13, 1955).

229. P. H. Harley, *Performance Tests of Off-Gas Natural Circulation Recombiner,* inner-office memo to W. R. Gall, Aug. 13, 1956.

230. I. K. Namba, *Natural Circulation Recombiner Report,* ORNL CF-56-9-27 (Sept. 10, 1956).

231. J. E. Kuster, *Waste and Disposal Systems,* ORNL CF-56-10-15 (Oct. 1, 1956).

232. T. L. Leland, *Design of Charcoal Adsorbers for the HRT,* ORNL CF-55-9-12 (Sept. 6, 1955).

233. P. N. Haubenreich, *Gaseous Activities in the HRT,* ORNL CF-54-6-110 (June 4, 1954).

234. W. E. Browning and C. C. Bolta, *Measurement and Analysis of the Holdup of Gas Mixtures by Charcoal Adsorption Traps,* ORNL-2116 (July 27, 1956).

235. L. B. Anderson, ORNL CF-55-8-102 (Aug. 16, 1955) (classified).

236. H. O. Weeren and W. J. Lee, *Performance of HRT Charcoal Beds,* ORNL CF-57-6-120 (June 4, 1957).

237. R. E. Adams and W. E. Browning, *Fission Gas Holdup Tests on HRT Charcoal Beds,* ORNL CF-58-4-14 (Apr. 2, 1958).

238. R. E. Adams and W. E. Browning, *Estimate of the Probability and Consequences of Ignition of the HRT Charcoal Beds,* ORNL CF-58-6-6 (June 3, 1958).

239. H. F. Bauman *et al., Summary of HRT Run 20,* ORNL CF-61-7-91 (July 19, 1961).

240. A. M. Rom and H. O. Weeren, *Design of Chemical Processing Plant for Homogeneous Reactor Test,* ORNL-2784 (Oct. 7, 1959).

241. W. L. Carter, P. S. Lindsey, and G. W. Gray, *Study of HRT-CP Waste Evaporator, Entrainment Separator, Condenser and Related Piping,* ORNL CF-55-11-143 (Nov. 25, 1955).

242. J. E. Kuster and C. A. Burchsted, *HRT Waste Tank Evaporator Sampler,* ORNL CF-56-10-16 (Oct. 11, 1956).

243. S. E. Beall and R. W. Jurgensen, *Direct Maintenance Practices for the HRT*, ORNL CF-58-4-101 (Apr. 18, 1958).

244. R. C. Robertson, *Steam System for HRT, A Study*, ORNL CF-54-4-194 (Apr. 28, 1954).

245. J. W. Hill, *HRT Operators Manual, Vols. I, II, and III*, ORNL CF-58-6-142 (June 9, 1958).

246. J. T. Selldorff, *Design Report – HRT Steam System*, KD-1327 (Mar. 7, 1955).

247. F. C. Zapp, *HRT Power System Flow Diagram – D-KP-L7602A-P, Maximum Load HRT Steam System Heat Balance – C-KP-L7602B1-P, Minimum Load HRT Steam System Heat Balance – C-KP-L7602B2-P*, ORNL CF-54-5-49 (May 11, 1954).

248. F. C. Zapp, *HRT Steam System Instrumentation*, ORNL CF-54-4-213 (Apr. 30, 1954).

249. F. C. Zapp, *HRT Steam System Instrumentation*, ORNL CF-54-5-198 (May 24, 1954).

250. H. A. McLain, *Chemical Cleaning and Storage of the HRT Steam and Closed Cooling Water Systems*, ORNL CF-57-6-36 (June 5, 1957).

251. P. D. Neumann, *Water Treatment in Aqueous Homogeneous Reactors, Experiences in HRE-2*, ORNL CF-61-1-19 (Jan. 4, 1961).

252. E. H. Gift, *Determination of Maximum Permissible Leakage from the HRT Process Steam System*, ORNL CF-59-1-143 (Jan. 30, 1959).

253. C. L. Segaser and F. C. Zapp, *HRE Design Manual*, ORNL CF-52-6-160 (Nov. 18, 1952).

254. H. D. Wills, *HRT Steam System Feedwater Pressure Control*, ORNL CF-58-4-8 (Apr. 15, 1958).

255. S. J. Ball, *Frequency Response Analysis of the HRT Feedwater Control System*, ORNL CF-58-4-10 (Apr. 4, 1958).

256. R. L. Moore, *Review of HRT Feedwater System*, ORNL CF-58-4-63 (Apr. 9, 1958).

257. J. W. Hill, Jr., *Requirements for HRT Auxiliary Steam Generator*, ORNL CF-54-5-30 (May 6, 1954).

258. O. Zmeskal, *Report on Stress Corrosion Cracking of Stainless Steels (An Analysis of Possible Chances of Its Occurrence in HRT)*, ORNL CF-55-8-112 (Aug. 15, 1955).

259. E. G. Bohlmann and G. M. Adamson, *Stress Corrosion Cracking Problems in the HRT*, ORNL CF-57-1-143 (Jan. 31, 1957).

260. G. M. Adamson *et al.*, *Metallurgical Examination of HRT Leak Detector Tubing and Flanges*, ORNL CF-57-1-109 (Jan. 31, 1957).

261. H. A. McLain, R. E. Aven, and R. C. Robertson, *HRT Cooling Water System Modifications*, ORNL CF-56-8-152 (Aug. 23, 1956).

262. R. C. Robertson, *HRT Cooling Water System*, inner-office memo to S. E. Beall, June 14, 1957.

263. R. C. Robertson, *HRT Cooling Water System*, inner-office memo to S. E. Beall, July 8, 1957.

264. F. C. Zapp, *HRT Cooling Water Requirements*, ORNL CF-54-5-224 (May 27, 1954).

265. R. L. Moore, *Control System for HRT Cooling Water*, ORNL CF-57-2-5 (Feb. 11, 1957).

266. H. A. McLain, *Treatment for the HRT Closed Cooling Water and Cooling Tower Water Systems*, ORNL CF-57-7-83 (July 20, 1957).

267. J. W. Hill, Jr., *Heat Losses from HRT to Shield Air*, ORNL CF-54-5-60 (May 14, 1954).

268. J. T. Selldorff, *Heat Loss to HRT Shield*, ORNL CF-55-1-93 (Jan. 12, 1955).

269. F. C. Zapp, *HRT Space Cooler Heat Load*, ORNL CF-55-10-17 (Oct. 5, 1955).

270. R. C. Robertson, "Cold Traps, Freeze Jackets, and Refrigeration System Used in the HRE-2," Nucl. Eng. Sci. Conf. Apr. 6–9, 1959, Cleveland, Ohio, preprint V-30.

271. R. C. Robertson and H. A. McLain, *Modified HRT Refrigeration System,* ORNL CF-57-8-67 (Aug. 6, 1957).

272. R. C. Robertson and H. A. McLain, *Secondary Refrigerant for HRT Refrigeration System,* ORNL CF-57-1-88 (Jan. 24, 1957).

273. C. Michelson, *Radiation Damage to Freon,* ORNL CF-55-9-163 (Sept. 30, 1955).

274. R. C. Robertson, *Use of SO_2 Rather than Freon-11 as Secondary Refrigerant in HRT Cold Traps and Permanent Freeze Jackets,* ORNL CF-55-12-50 (Dec. 9, 1955).

275. R. C. Robertson and J. E. Kuster, *Possible Substitutes for Freon-11 in HRT Cold Trap Refrigeration System,* ORNL CF-56-4-20 (Apr. 5, 1956).

276. R. C. Robertson, *Operational Tests Associated with Use of Freon in HRT Secondary Refrigeration System,* ORNL CF-56-4-106 (Apr. 17, 1956).

277. M. D. Silverman, B. O. Heston, and P. S. Rudolph, *Radiation Damage to Freon,* ORNL CF-56-8-198 (Aug. 27, 1956).

278. M. D. Silverman, *The HRT Refrigerating System,* ORNL CF-57-1-28 (Jan. 9, 1957).

279. R. C. Robertson, *HRT Permanent Freeze Jacket Locations – Revised May 29, 1956,* ORNL CF-56-5-183 (May 29, 1956).

280. R. C. Robertson, *Permanently Installed HRT Freeze Jackets,* ORNL CF-57-1-95 (Jan. 16, 1957).

281. A. L. Gaines, *Mechanical and Thermodynamic Design of Freeze Units for HRT Process Lines,* ORNL CF-55-11-182 (Nov. 30, 1955).

282. S. H. Jury, *Convectional Heat Transfer Considerations in the Design of Freeze Units for HRT Process Lines,* ORNL CF-56-4-204 (Apr. 10, 1956).

283. R. C. Robertson, *Permanent Freeze Jackets for HRT Process Lines ½ in. and Smaller,* ORNL CF-56-2-137 (Feb. 23, 1956).

284. B. D. Draper, *Test of Stainless Steel Freeze Jacket to be Used on ½-in. High-Pressure and High-Temperature Process Lines,* ORNL CF-57-1-89 (Jan. 21, 1957).

285. R. E. Aven, *Control of Xenon Poisoning by Stripping with Gas,* ORNL CF-54-2-200 (Jan. 25, 1954).

286. F. C. Zapp, *HRT Oxygen Addition System,* ORNL CF-56-3-42 (Mar. 2, 1956) and addenda (Mar. 21, 1956).

287. S. Visner, *Oxygenation of HRT Solution,* ORNL CF-54-7-34 (July 14, 1954).

288. A. M. Billings, *HRT Oxygen Metering Stations,* ORNL CF-56-7-72 (July 19, 1956).

289. R. Van Winkle, *Specifications for the Fuel Oxygenation Systems,* ORNL CF-55-7-13 (July 1, 1955).

290. R. Van Winkle, *Calculated Internal Surface Areas in the HRT High-Pressure Fuel and Blanket Systems,* ORNL CF-56-5-89 (May 10, 1956).

291. R. E. Aven, *Concentration of D_2 and O_2 in Fuel Feed Stream as it Enters the High-Pressure Circulating System,* ORNL CF-55-12-149 (Dec. 28, 1955).

292. C. L. Segaser, *Minutes of Meeting on HRT Sampling Requirements,* ORNL CF-54-4-124 (Apr. 15, 1954).

293. R. B. Briggs, W. R. Gall, and C. L. Segaser, *HRT Design Request No. 5 – High-Pressure and Low-Pressure Sampling Systems for HRT,* ORNL CF-54-9-223 (Sept. 29, 1954).

294. B. A. Hannaford, *HRT Sampler Development,* ORNL CF-57-1-87 (Jan. 22, 1957).

295. C. J. Claffey, *HRT Cell Air Monitor Blower,* ORNL CF-55-6-146 (June 21, 1955).

4. Reactor Containment Cell and Shield Design

4.1 CONTAINER DESIGN

4.1.1 Design Requirements

General design requirements for the reactor cell included:[1,2]

1. Locating the reactor containment cell below grade in the existing 7500 Building, with the top of the shield at the existing floor level.
2. Designing the sides and top of the container for complete biological protection to personnel in the building when the reactor is operating at 10-Mw power level.
3. Designing the cell to contain the reactor contents and fission products in the event of a major rupture in the high-pressure circulating system. This implies that the cell be lined with a corrosion resistant material and be capable of accommodating a pressure rise due to the flash vaporization of the reactor contents when released into the cell.
4. Designing the cell so that it can be filled with water for personnel protection during maintenance operations, with provisions for dividing the cell into two approximately equal volumes that can be flooded separately.
5. Making the top of the cell completely removable, using stepped shielding plugs of such weight that the existing building crane can accommodate.
6. Providing numerous penetrations for service and instrumentation piping and conduit. These penetrations must be designed to prevent excessive leakage of gas, water, and radiation.

Comparative studies were made of the use of reinforced concrete throughout vs a steel tank with a concrete roof structure; they indicated a slight cost advantage for the reinforced concrete structure.[3] However, the steel tank had several significant advantages such as: a much greater assurance of a leak-tight cell, easier decontamination, and simpler design details for cell penetrations. The advantages of the steel tank more than offset the slightly higher cost, and this type construction was specified.

4.1.2 Design Pressure

Based on a pressure rise of 20 psi (later revised upward), studies to determine the optimum cell operating pressure concluded that a pressure of $\frac{1}{2}$ atm would be about optimum from a structural design standpoint.[3] The design and construction of the cell proceeded on the basis of a pressure rise from −7.5 psig to +15 psig. After construction of the cell was under way, further calculations and experiments were performed to determine the maximum pressure rise in the reactor cell for a number of postulated reactor accidents.[4,5] The results of these calculations, which included the effect of heat transfer to the cell walls, are shown for four cases in Fig. 4.1. The cases are identified as follows:

Case 1: The reactor contents, initially at 2000 psi and 300°C, are released instantaneously. The fuel heat-exchanger system, initially at 300°C and filled to normal operating level, is released through the condensate drain lines.

Case 2: The reactor contents, at 2000 psi and 300°C, are released instantaneously. The fuel heat-exchanger system, initially at 300°C and filled to normal operating level, is released through the 6-in. steam line.

Case 3: The reactor contents, at 2000 psi and 300°C, are released instantaneously. Both heat exchanger systems, initially at 300°C and filled to normal operating level, are released through their condensate drain lines.

Case 4: The reactor contents, at 2000 psi and 300°C, are released instantaneously. The fuel and blanket heat-exchanger systems, initially at 300°C and filled to normal operating level, are released through 6-in. and 4-in. steam lines respectively.

Based on these calculations and the expectation that the cell would be utilized for future reactor experiments, design changes were made to the roof structure and interior column anchors which would permit a pressure rise of 50 psi before the calculated rupture point is reached. However, the north wall was modified to permit a calculated pressure rise of only 37.5 psi without failure.[3] (After removing the barytes sand and water shielding material, this wall could be strengthened if necessary at a later date. The other walls are backfilled with concrete and are adequate for the 50 psi pressure rise.)

The completed cell was pressure tested to demonstrate its adequacy to withstand a static gas pressure of 30 psig.[6,7] Since an air test would be hazardous, the tank was filled with water and a hydrostatic over-pressure applied. Strain gages were attached at a number of points suspected of being weak. Figure 4.2 is a typical plot of the strain data for a tensile member. Curves 1 through 4 represent successive runs as the pressure was extended to its final value. The line representing the air test data is extrapolated to show that for a 30 psig static gas pressure the strain in the member will not exceed the strain it safely exceeded during the hydrostatic test. Based on these tests the container vessel was judged adequate for a pressure rise of 37.5 psi (from −7.5 psig to +30 psig). A later study of the effects of a zirconium-water reaction on the pressure rise indicated no appreciable increase in the pressure for reactions less than 10% complete.[8]

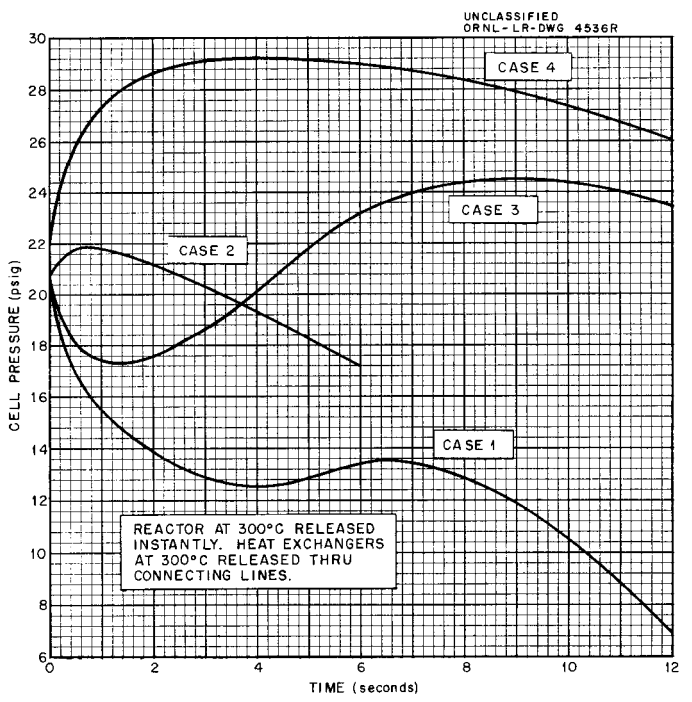

Fig. 4.1. Pressure in HRT Shield due to Release of Reactor and Heat-Exchanger Contents.

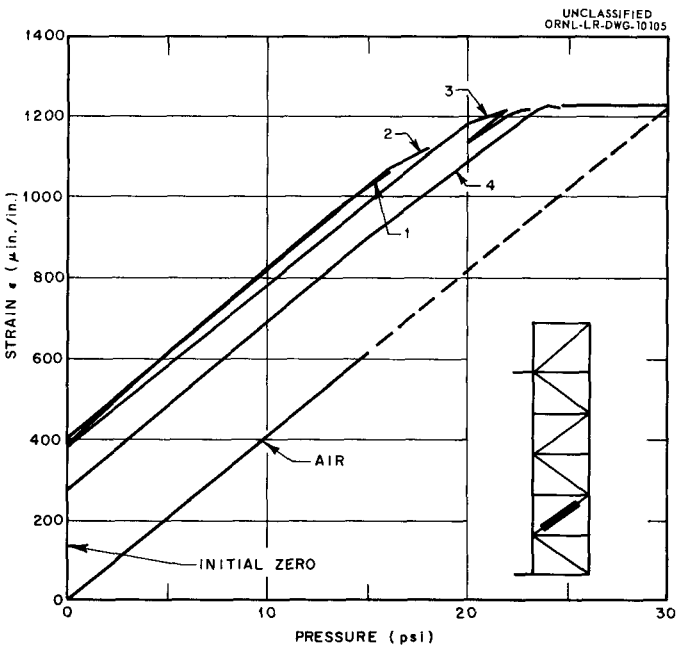

Fig. 4.2. Strain Pressure Plot – Member AE-9.

4.1.3 Description

The reactor cell as designed and constructed is a steel tank 54 ft long by 26 ft wide by 20 ft deep (inside dimensions) located approximately in the center of the high bay of Building 7500. (See Fig. 1.4 for a plan view of the building.) The bottom of the tank, as shown in Fig. 4.3, is 25 ft below the ground level. The tank rests on and is anchored to a reinforced concrete slab 3 ft 6 in. thick. The east, west, and south walls are backfilled with concrete for support and shielding.

The north wall of the cell (adjacent to the control area) is a 5-ft-6-in.-thick steel tank, filled with a mixture of barytes aggregate, colemanite ore, and water.[9,10] Several hundred service and instrumentation penetrations pass through this wall. To expedite construction and modifications the shielding material was not placed in the tank until after the critical experiments had been performed.

The cell is divided into two approximately equal volumes (total gross volume is 28,100 ft^3) by a water-tight steel bulkhead running north and south. A removable water-tight gate (94 ft^2 open area) is located in the middle span of the cell. During operation the gate is removed, making available the entire cell volume for expansion in the event of a rupture. By placing the gate in position, either end of the cell can be flooded separately for maintenance operations.

The floor and the lower 4 ft of the cell walls are constructed of stainless-clad carbon steel to facilitate decontamination in the event the reactor contents are spilled. The stainless steel cladding is type 304 with a minimum thickness of 0.05 in. The upper portions of the carbon steel cell liner and all other structural elements were sandblasted and painted with five coats of Amercoat No. 74 paint to prevent corrosion and to improve light reflection. The floor in each half of the cell slopes to a sump. A cove is provided at the junction of the walls and floor, and all welds in the stainless clad portion were ground smooth to facilitate decontamination.

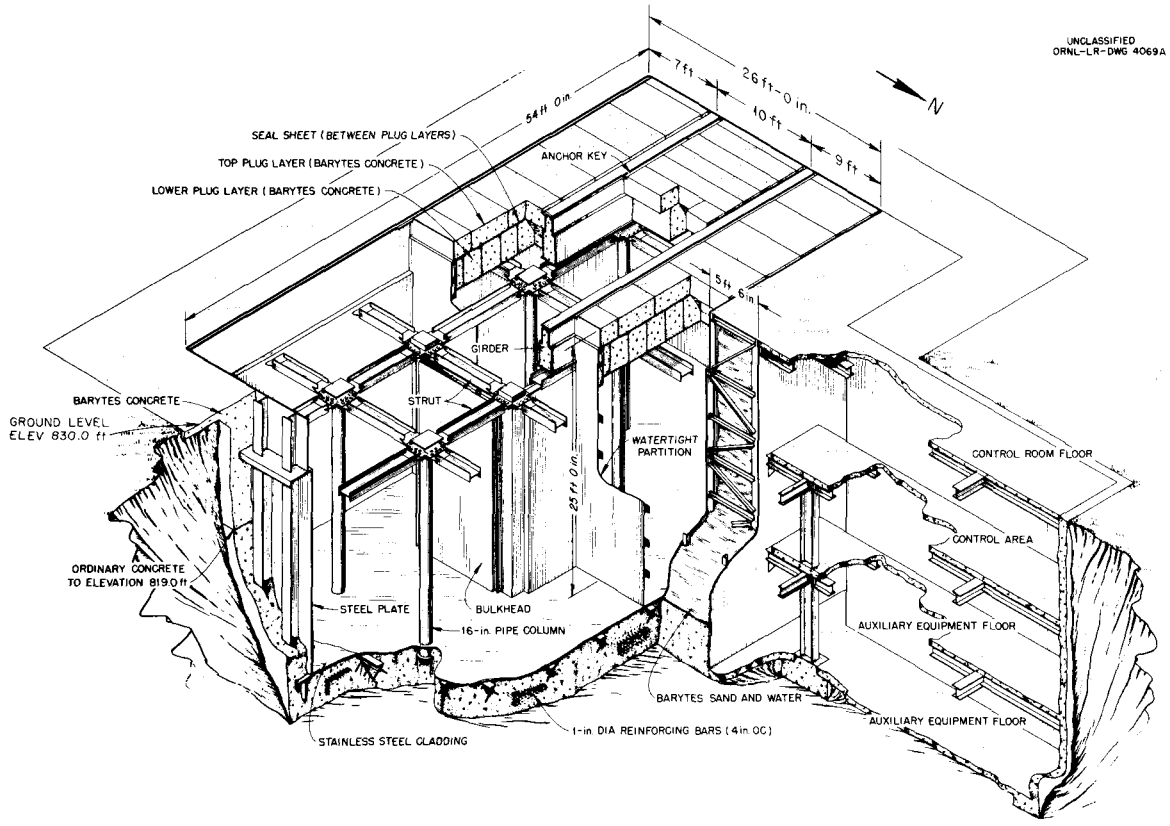

Fig. 4.3. Plan of Reactor Cell; North-South Section of Reactor Cell; East-West Section of Reactor Cell.

The roof structure is supported on steel columns filled with concrete and anchored to the floor slab. The columns are tied laterally at the top to each other and to the cell walls with removable steel struts as shown in Fig. 4.3. Steel box girders filled with barytes-colemanite concrete rest on top of the columns and support the removable roof plugs. The girders are anchored to the columns with shear pins to resist the internal pressure. Details of the roof structure are shown in Fig. 4.4. As indicated in the figure two sets of roof plugs are used. The lower roof plugs are reinforced barytes-colemanite concrete 2 ft wide by 40 in. thick. The upper roof plugs are reinforced barytes concrete 4 ft wide by 20 in. thick. Anchor keys are provided at the ends of the upper roof plugs to resist the internal pressure loading.

A thin steel sheet is introduced between the layers of roof plugs to provide a pressure seal.[11] Joints in the seal sheets coincide with joints in the upper roof plugs. The seal sheet joints are upstanding seams, seal welded to prevent leakage. The joints are designed to allow several cycles of opening and rewelding.

The concrete roof structure was designed to carry a 200 lb/ft^2 live load in addition to the operating pressure of −7.5 psig. To provide for extra shielding and floor loads, the four steel columns adjacent to the reactor vessel are designed to carry an additional live load of 450 lb/ft^2 on the panel directly above the reactor vessel. Each of the other columns is designed for an additional concentrated live load of 105,000 lb. The walls are designed for an additional vertical live load of 9000 lb/linear ft.[3]

The control area occupies the central portion of the north side of the reactor cell as shown in Fig. 4.3. Three underground floor levels are provided in addition to the ground level room which

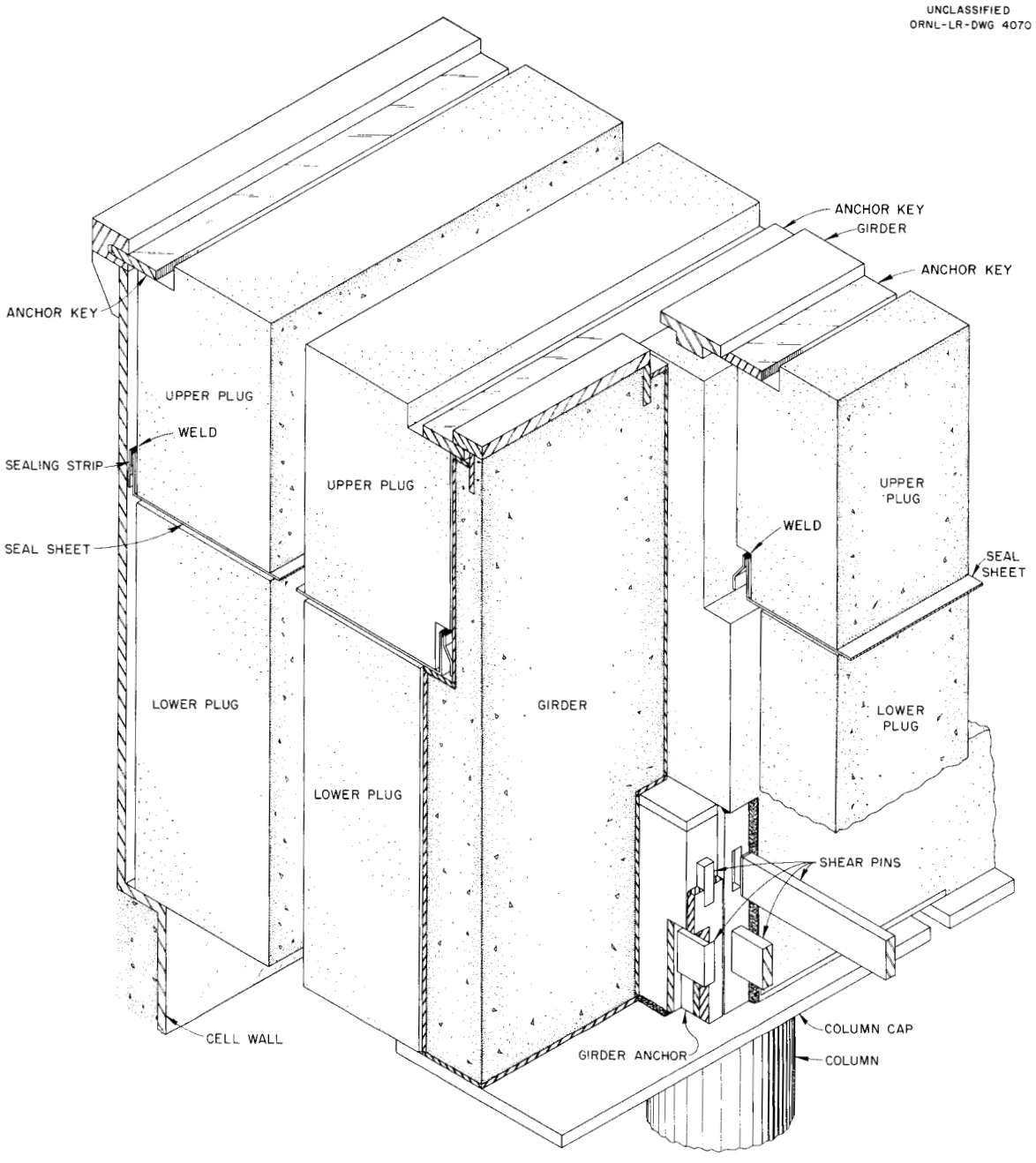

Fig. 4.4. Details of Cell-Roof Structure.

houses the control console and main instrument panels. Each floor level is designed for a live load of 200 lb/ft^2. Each of the underground levels is capable of carrying 2000 lb/ft^2 on a 5-ft width adjacent to the reactor cell for heavy equipment and additional shielding if required.[3]

Two instrument cubicles are provided on the outside of the north wall of the reactor cell at either end (east and west of the underground control room levels). Instruments which cannot be waterproofed or serviced under water easily and which are connected to the reactor system in such a manner that they can become contaminated are housed in the two cubicles.

Each cubicle consists of a gas-tight steel tank welded to the outside of the reactor cell and surrounded by concrete as shown in Fig. 4.5. Access to the cubicles is through the top by removing the shield plug and either opening the quick-opening manway or removing the entire top of the tank. The north wall shielding provides protection from the reactor equipment so that maintenance personnel can enter the cubicles to service the instruments when the reactor is not operating. Design pressure of the cubicles is 50 psig; if the pressure exceeds this value it is relieved through rupture disks to the reactor cell.

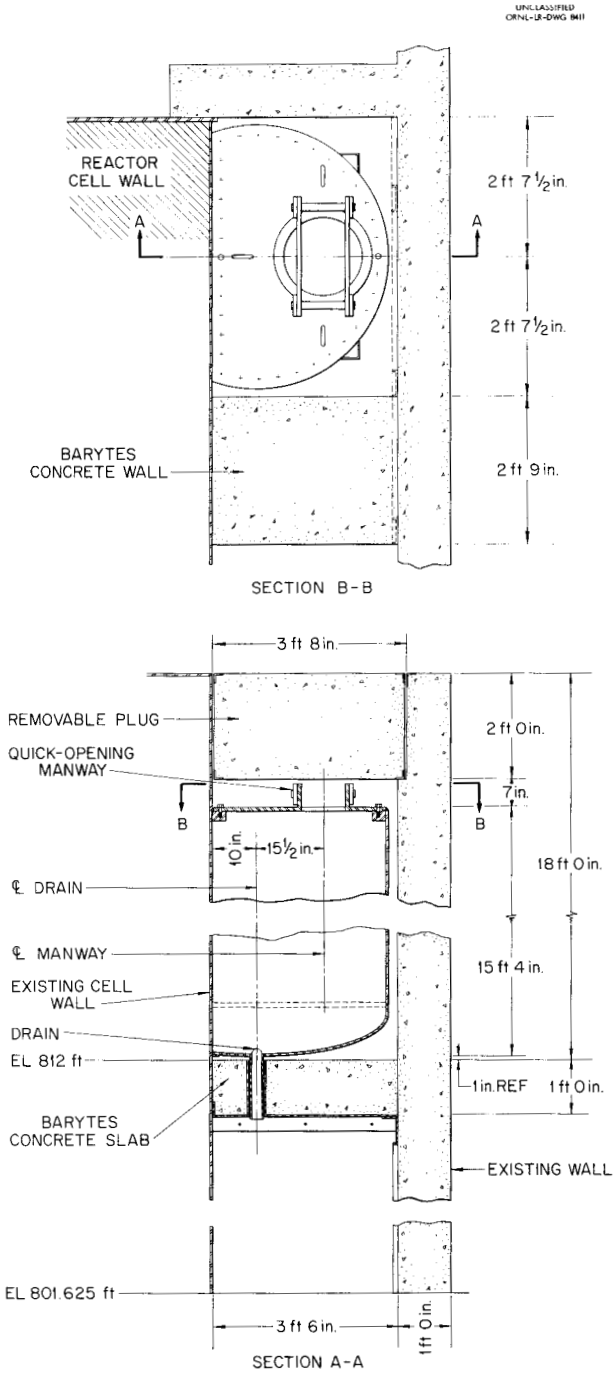

Fig. 4.5. Instrument Cubicle.

Cavities are provided at each end of the reactor cell for the fuel and blanket sampling equipment shown by Fig. 3.90. These cavities have access from the building floor level. Connections to the reactor cell are provided in the concrete shield as shown in the figure.

4.2 RADIATION SHIELDING

4.2.1 General Design

The schedule for construction of HRE-2 necessitated design of the reactor cell before the reactor components were completely designed. It was also proposed that the shield and container cell be capable of housing future experimental reactors. These requirements implied a versatile design suitable for installation, operation, and maintenance of HRE-2 and, after minimum changes, suitable for other reactors.

In order to avoid delay in the construction schedule, some preliminary calculations were made to determine the thickness of shielding required for personnel protection.[1] These calculations, based on the methods used for the HRE-1 and estimated radiation sources,[12–14] indicated an equivalent thickness of 7 ft of high-density concrete (density of 3.5 g/cm^3) would be necessary around the reactor proper and an equivalent thickness of 5 ft of high-density concrete around the remainder of the system. Following a decision to use barytes aggregate, colemanite, and water in place of concrete in the north wall of the reactor cell, its thickness was increased to 5.5 ft to compensate for the reduction in density.[9] The heat generation in the wall was investigated to determine if the temperature rise would be sufficient to require internal cooling.[15] Because of the thermal shield surrounding the reactor vessel, the radiation entering the north wall is not sufficient to cause a serious temperature rise. The temperature profile through the wall in the region of greatest heat production is shown in Fig. 4.6, based on heat transfer coefficients at the two surfaces of 0.5 Btu hr^{-1} ft^{-2} (°F)$^{-1}$.

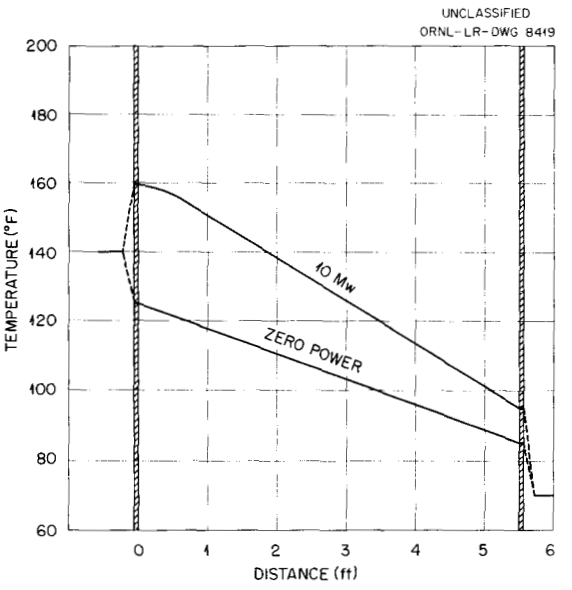

Fig. 4.6. Temperature Distribution in North Shield Wall.

4.2.2 Reactor Thermal Shield

Two problems of concern in the design of the shield are the heat generated in the concrete, which leads to cooling and thermal stress problems, and the activation of argon in the air within the cell, which results in a problem of disposing of radioactive gases. It was found that both of these problems could be alleviated by placing a thermal shield around the reactor vessel. Several configurations were investigated to determine the most practical shield arrangement around the reactor vessel for the required shielding effect.[16–19]

Horizontal and vertical sections of the configuration selected for reactor thermal shield are shown in Fig. 4.7. The shield consists of a 1-ft-8-in.-thick vertical shield filled with a barytes sand and water mixture and 1-ft-thick top and bottom shields filled with steel shot and borated water. The bottom slab sits near the cell floor and supports the reactor vessel. The legs connecting the vessel to the slab are designed to withstand an upward thrust of 50,000 lb on the reactor vessel. This is the net force which could result if the bottom flange were blown out of the vessel and the contents discharged in a jet impinging against the slab.[20] (See Sec 3.3.) The entire structure of the thermal shield is designed to withstand an internal pressure differential of 25 psi without exceeding the yield stress. A vent area of approximately 50 ft^2 is provided in openings between the sides and top and bottom slabs so that gas and vapor can escape in the event of failure of the reactor vessel. With this vent area the differential pressure buildup inside the shield was estimated to be less than 25 psi.[21]

A closed-loop cooling system, shown schematically in Fig. 4.8, was designed for the thermal shield to maintain the temperature of the shielding material below 180°F, the saturation temperature of water at the 7.5 psia cell operating pressure.[22] At this temperature, there is no excessive loss of water from the shield. However, a fill-and-vent system is provided (not shown in the figure) to replace water lost from the shield by evaporation and radiolytic decomposition. A closed-loop coolant circuit was required to prevent leaching of soluble boron, which is added to the shield mixture as a colemanite ore. Estimated heat removal rates are 8.8, 18.0, 3.2 kw, respectively, for the top, side, and bottom portions of the thermal shield, based on 10-Mw core power and a uranyl sulfate blanket.[22]

With the thermal shield in place and the reactor operating at a power level of 10 Mw, the estimated radiation dose rate above the 5-ft-thick barytes-concrete roof plugs is expected to be about 12 mrem/hr. The fast neutron flux in the cell, outside the thermal shield, will be about 7×10^9 neutrons cm^{-2} sec^{-1}, and the thermal flux will be about 4×10^7 neutrons cm^{-2} sec^{-1}. The gamma-ray intensity will be 5×10^4 to 1×10^5 r/hr.[19] Some calculations showed that induced activity in the shield and equipment would be small in comparison to fission product activity adhering to the inner surfaces of the equipment, even if only small percentages of the total fission products are retained on the surfaces. Activation of the shield and steel cell liner contribute only about 3 r/hr to the cell radiation level 4 hr after the reactor shutdown following 1 yr of operation at 5 Mw.[23]

Streaming of fast neutrons through the cracks separating the roof shielding plugs directly above the reactor was investigated and found to be not serious.[24] A $\frac{1}{8}$-in.-wide crack was assumed between the 40-in.-thick bottom layer of plugs. Attenuation of fast neutrons by the steel pressure vessel, the 1-ft-thick thermal shield, and the 20-in.-thick top layer of shielding plugs was considered. With the D_2O reflected reactor operating at 5 Mw, the fast-neutron dose rate directly above the crack separating the lower plugs would be about 30 mrem/hr. Since this beam of neutrons is highly collimated and personnel are not permitted on the shield plugs when the reactor is operating, this dose rate was not considered excessive.[24]

UNCLASSIFIED
ORNL-LR-DWG 8824

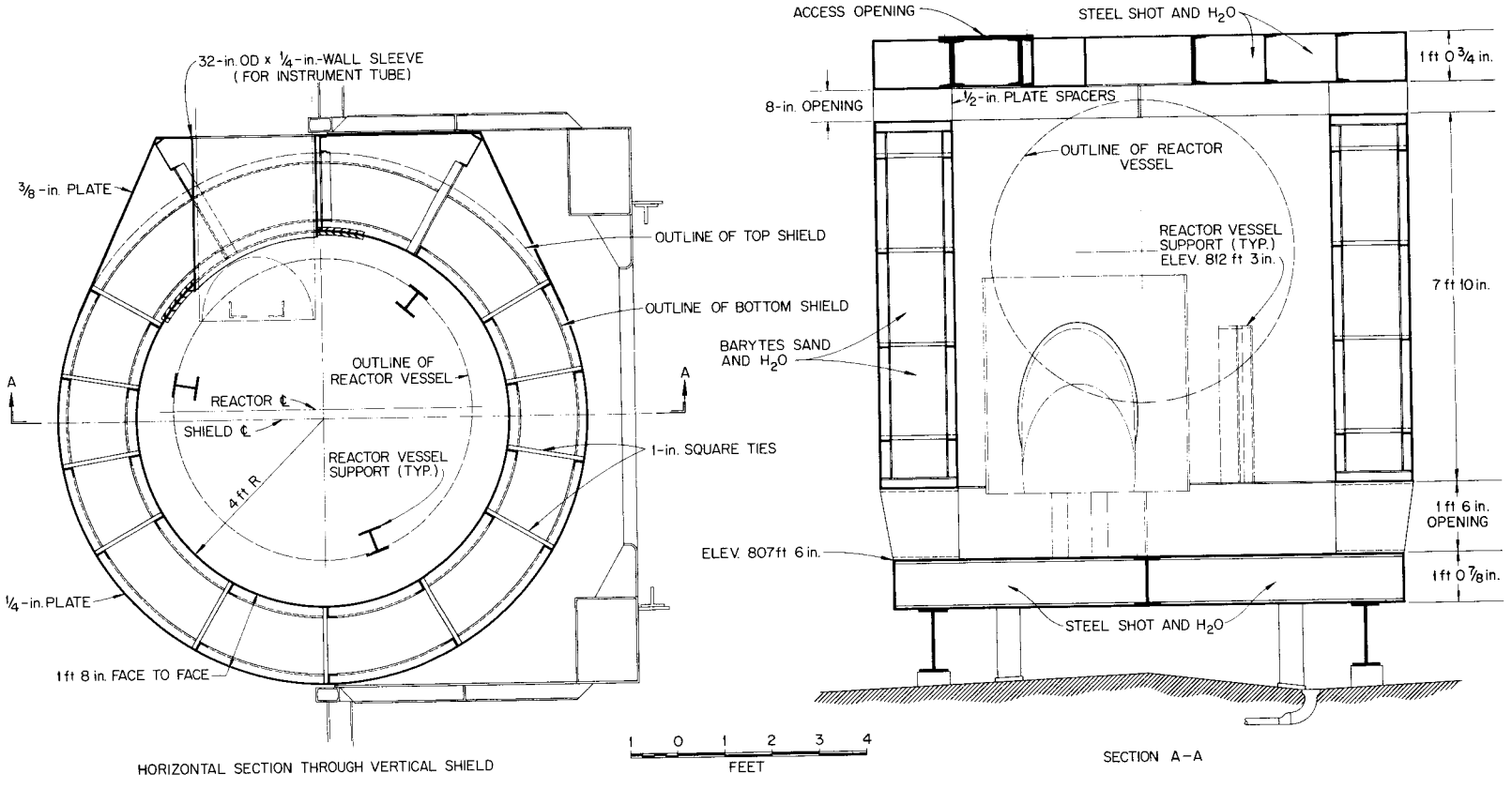

Fig. 4.7. Thermal Shield Arrangement.

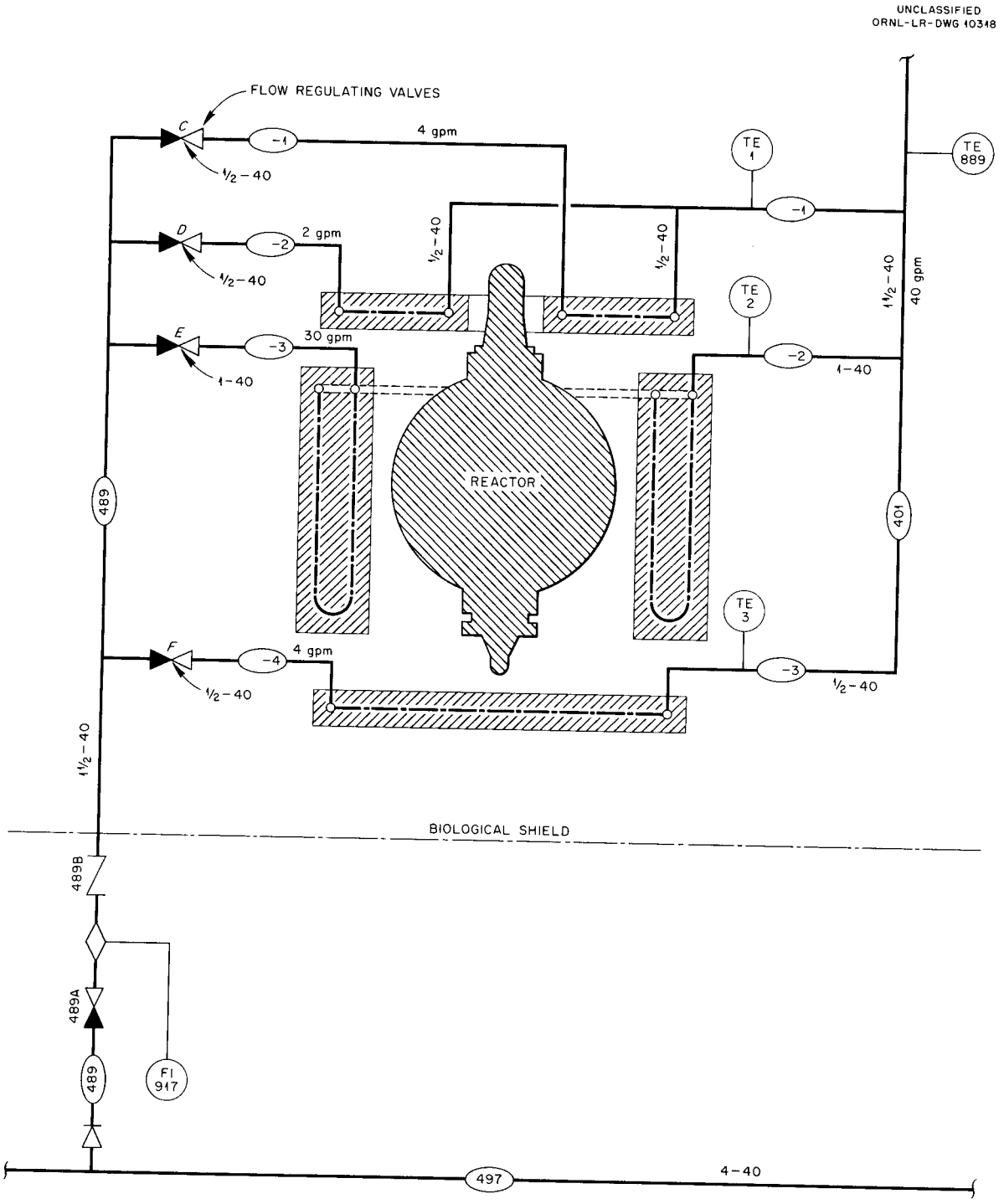

Fig. 4.8. Thermal-Shield Coolant Distribution and Control.

4.2.3 Special Shielding Considerations

The charcoal beds, the off-gas lines to the beds, the waste storage tank, and the waste piping are located underground with ordinary earth fill for shielding.[25–27] Assuming 10-Mw reactor power operation, an off-gas flow of 500 cm^3/min, and a 30-min delay time between the core and the off-gas line, calculations showed that 10 ft of earth fill (100 lb/ft^3) on top of the 1-ft-thick concrete slabs would limit the dose rate above the charcoal beds to about 1 mr/hr. Similar calculations for the off-gas lines to the charcoal beds indicated a dose rate of 1.1 mr/hr for 8 ft of earth fill.[26] Calculations for the underground waste piping and waste-storage tanks indicated adequate protection with only 5.5 ft of earth fill, based on certain postulated accidental spills of fuel solution in the reactor cell.[27]

The radiation dose above the samplers was investigated to determine the dose rate expected during sampling operations.[28,29] Calculations indicated a dose rate of 10 mrem/hr above the sampler, assuming a 60% lead–40% water shield thickness of 25 in. and 10-Mw core power. About 75% of this dose rate results from delayed neutrons emitted while the fuel is circulated through the sampler. After the sample is isolated the delayed-neutron dose rate falls rapidly, so that after about 2 min the dose rate is essentially that due to fission product decay.

The overall size of the sample carrier is limited by space considerations in the analytical hot cell. Thus the shield of the carrier consists of 6 in. of lead. The dose rate was estimated to be 640 mr/hr at contact and 70 mr/hr at 1 ft.[30] An investigation of the sample carrier for use in transporting an antimony-beryllium source for use in the HRE-2 critical experiments indicated adequate shielding for the intended use.[31,32]

An investigation was made of the radiation dose rate which might result if the fuel steam drum and the piping in the steam valve pit were filled with radioactive steam. It was determined that 2 ft of barytes concrete over the steam valve pit and 2 ft of barytes concrete plus 9 in. of barytes gravel over the steam drum would provide adequate protection.[24]

Estimates of the radiation escaping through shield openings during maintenance operations were made for a number of situations in order to design temporary shielding and to develop maintenance procedures.[33–37] After reactor shutdown the sources of gamma radiation in the reactor cell will be associated with the induced activity in the shield material and the cell equipment and with the fission products adhering to the inner surfaces of the equipment and piping. The biological dose rate from radiation escaping through a maintenance porthole was estimated, taking into consideration line-of-sight radiation from equipment, piping, and shield wall, and scattered radiation from porthole wall, cell walls, cell equipment, and cell air. The results of these calculations were used to prepare simplified design charts of the type shown in Fig. 4.9 for each porthole opening. The calculations were based on the assumptions that the reactor had operated several weeks at 5 Mw and had been shutdown from 4 hr prior to opening the shield, and that 50% of the total generated fission products were uniformly distributed over the surfaces exposed to fuel solution. Point sources equivalent to 1 ft^2 of surface were assumed. Detailed tabulations of the radiation dose rates at the various cell openings were reported for all the radiation sources contributing to the dose rate.[37]

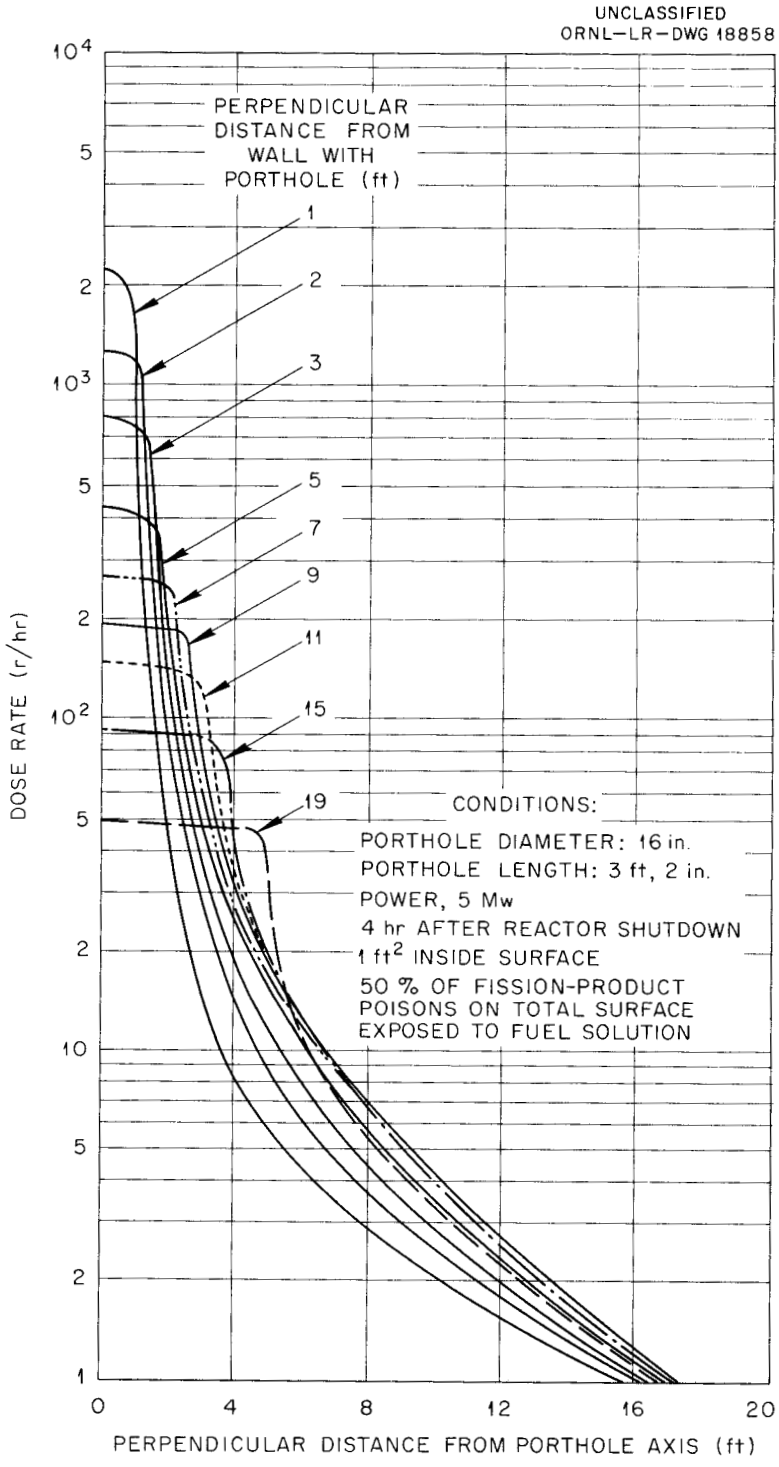

Fig. 4.9. Biological Dose Rate at Outer Edge of HRT Shield due to Gamma Leakage Through Maintenance Porthole.

REFERENCES

1. R. B. Briggs and C. L. Segaser, *HRT Design Request No. 1 – Reactor Shield,* ORNL CF-54-4-80 (Apr. 8, 1954).
2. C. L. Segaser, *Additional Specifications for HRT Reactor Cell and Control Gallery,* ORNL CF-54-5-202 (May 26, 1954).
3. R. M. Batch, *Design Report – HRT Reactor Shield and Alterations to the 7500 Bldg. and Services,* Inner-Office Memo to Distribution (June 29, 1956).
4. P. F. Pasqua, *Pressures in the HRT Shield Resulting from Rupture of the Reactor,* ORNL CF-54-9-30 (Sept. 3, 1954).
5. P. M. Wood, *A Further Study of Pressure Rise in HRT Shield,* ORNL CF-55-1-3 (Jan. 3, (1955).
6. S. E. Beall, *Pressure Testing of Reactor Pit,* ORNL CF-55-4-126 (Apr. 21, 1955).
7. J. N. Robinson, *Preliminary Report – Test of HRT Cell,* ORNL CF-55-11-62 (Nov. 9, 1955).
8. M. W. Rosenthal, *Hazard to HRT Containment Cell from Zirconium-Water Reaction of D_2 Explosion,* ORNL CF-56-8-156 (Aug. 24, 1956).
9. R. B. Briggs and C. L. Segaser, *Revised Thickness of Shield Wall on North Side of HRT Installation,* ORNL CF-54-5-93 (May 17, 1954).
10. J. E. Kuster, *Lateral Pressure and Density of Barytes Aggregate and Water Mixtures,* ORNL CF-55-10-61 (Oct. 14, 1955).
11. S. E. Beall, *Containment Problems in Aqueous Homogeneous Reactors,* ORNL-2091 (Aug. 7, 1956).
12. C. L. Segaser and F. C. Zapp, *HRE Design Manual,* ORNL CF-52-6-160 (Nov. 18, 1952).
13. M. Tobias, *Radiation Sources in the HRT,* ORNL CF-54-3-45 (Mar. 10, 1954).
14. C. L. Segaser, *Estimate of Shielding Requirements for the HRT Dump Tanks,* ORNL CF-54-3-175 (Mar. 16, 1954).
15. P. N. Haubenreich, *Heat Generation and Temperature Distribution in Control Room Shield Wall,* ORNL CF-55-7-115 (July 27, 1955).
16. P. N. Haubenreich, *Requirements for HRT Top Plug,* ORNL CF-54-5-200 (May 27, 1954).
17. P. M. Wood, *Neutron Flux and Stainless Steel Activation in HRT Cells with Barytes Concrete Walls,* ORNL CF-54-5-164 (May 19, 1954).
18. R. B. Briggs, *Heat Production in HRT Shield and Argon Activation in Reactor and Equipment Cells,* ORNL CF-54-5-46 (May 7, 1954).
19. P. M. Wood, *Thermal Shield for HRT,* ORNL CF-54-12-99 (Dec. 14, 1954).
20. P. R. Kasten, *Holding Force Required for HRT Pressure Vessel,* ORNL CF-55-5-166 (May 25, 1955).
21. R. E. Aven, *Pressure Rise Inside HRT Thermal Shield in Event of Pressure Vessel Failure,* ORNL CF-55-7-95 (July 20, 1955).
22. C. L. Segaser, *HRT Thermal Shield Systems,* ORNL CF-55-11-166 (Nov. 9, 1955).
23. P. R. Kasten *et al., HRP Quart. Progr. Rept. Oct. 31, 1956,* ORNL-2222, pp 20–21.
24. P. M. Wood, *HRP Quart. Progr. Rept. Oct. 31, 1954,* ORNL-1813, p 24.
25. T. W. Leland, *Shielding for HRT Charcoal Pit and Gas Line,* ORNL CF-55-8-145 (Aug. 24, 1955).

26. J. O. Kolb, *Shielding for the HRT Charcoal Pit and Off-Gas Lines,* ORNL CF-56-1-106 (Jan. 20, 1956).

27. W. D. Burch, *Shielding of Outside Underground Waste and Vent Piping,* ORNL CF-56-4-22 (Apr. 3, 1956).

28. P. N. Haubenreich, *Effects of Reduction in Thickness of Sampler Shield Plug,* ORNL CF-56-1-159 (Jan. 31, 1956).

29. P. N. Haubenreich, *Revised Estimates of Neutron Leakage Through Sampler Shield Plug,* ORNL CF-56-2-59 (Feb. 14, 1956).

30. D. M. Johnson, *HRT Sample Carrier Shielding Calculations,* ORNL CF-56-1-122 (Jan. 24, 1956).

31. P. N. Haubenreich and G. W. Rivenbark, *HRT Source Shield Calculations,* ORNL CF-57-1-107 (Jan. 8, 1957).

32. C. A. Burchsted and C. L. Segaser, *HRT Source Handling Facilities,* ORNL CF-56-11-58 (Nov. 15, 1956).

33. R. E. Aven, *Radiation Problem in Removing Rupture Disc Assembly After Operation of HRT,* ORNL CF-56-9-35 (Sept. 10, 1956).

34. T. B. Fowler and H. C. Claiborne, *Calculation of Air Scattered Gamma Radiation Escaping Through Shield Opening – Application to the HRT,* ORNL CF-56-12-36 (Dec. 5, 1956).

35. H. C. Claiborne and T. B. Fowler, *Calculation of Shield Induced Gamma Radiation Escaping Through Opening in a Biological Shield – Application to HRT,* ORNL CF-57-1-46 (Jan. 11, 1957).

36. H. C. Claiborne and T. B. Fowler, *Calculation of a Wall-Scattered Gamma Radiation Escaping Through a Shield Opening – Application to HRT,* ORNL CF-57-2-98 (Feb. 19, 1957).

37. C. W. Collins, *Estimated Gamma Radiation Levels at Access Holes in the HRT Shielding,* ORNL CF-57-1-150 (Jan. 29, 1957).

5. Equipment Layouts, Piping Design, and Maintenance

5.1 EQUIPMENT LAYOUTS

One of the objectives of the HRE-2 was to test simplified maintenance procedures and, in particular, underwater maintenance techniques.[1] Consistent with this objective a decision was made to maintain the system by replacing components rather than attempting repairs in place. Following this philosophy, the equipment in the reactor cell was located to provide for access and removal from above. This, of course, implies that the equipment will be "spread-out". Simplified diagrams of the arrangement of reactor components in the containment cell are shown in Figs. 5.1. and 5.2.

In plan view the reactor vessel and its thermal shield are located at the center of the cell. All fuel system equipment (Fig. 5.1) is located to the left of the reactor, and the blanket system equipment is to the right. A watertight bulkhead with a removable gate separates the two equipment areas. Most of the high-pressure components are located close to the reactor vessel to minimize holdup volume in the connecting piping. Since it is desirable for safety reasons to provide surge capacity as near to the reactor as practical, the pressurizers are located directly above the reactor vessel. The low-pressure unit assemblies are located at either end of the cell.

Several layout rules were adopted for overall convenience. When possible, flanges are located in vertical pipe runs so that the flange bolts are readily manipulated in the vertical direction. Piping raceways were designated along the cell walls and along the column lines to limit random routing of pipe lines. Valves are located as close to the control room as possible so that instrument air lines and leak detector lines can be kept short. Figure 5.3 is a photograph of the fuel system equipment taken during the late stages of construction. Typical valve locations can be seen near the north wall of the cell (left side of figure). Also note the pipe raceways along the cell walls and beneath the column struts.

Several air-actuated valves, varying in size from $\frac{1}{8}$ in. to 1 in., are located within the reactor cell. Since valves and actuators are subject to failure, provisions are made to facilitate their replacement. A typical low-pressure valve installation is shown in Fig. 5.4. An angle-iron support bracket is permanently mounted relative to the flanges to which the valve connects. The valve-bellows leak-detector line and the actuator air lines are provided with disconnects at the top of the cell. Pipe line freezer units are provided adjacent to the nonremovable flanges to prevent entry of shield water into the system during maintenance operations.

For the low-pressure valve installations, the pipeline flanges are separated a distance equal to the length of the valve body, which is machined with a matching gasket groove on each end. Through-bolts clamp the assembly to effect a seal at each gasket joint. The high-pressure valve installations are similar to the low-pressure installations, except that the valve bodies are welded to short sections of pipes with attached flanges for mating with permanent flanges in the pipelines.[2] Jigs, similar to that shown in Fig. 5.5, are used to assemble replacement valves with flanges and connecting piping to ensure proper fit with existing flanges in the cell. Figure 5.6, a photograph taken during reactor construction, shows typical valve installations. As distinguished by the flanged connections, the two valves in the left half of the figure are high-pressure valves and the two on the right are low-pressure valves. Clearly visible in the figure are the freezer coils adjacent to the nonremovable flanges (see Sec 3.14), the support brackets, the instrument air lines to the valves, and the lifting bails for removing the valve assemblies.

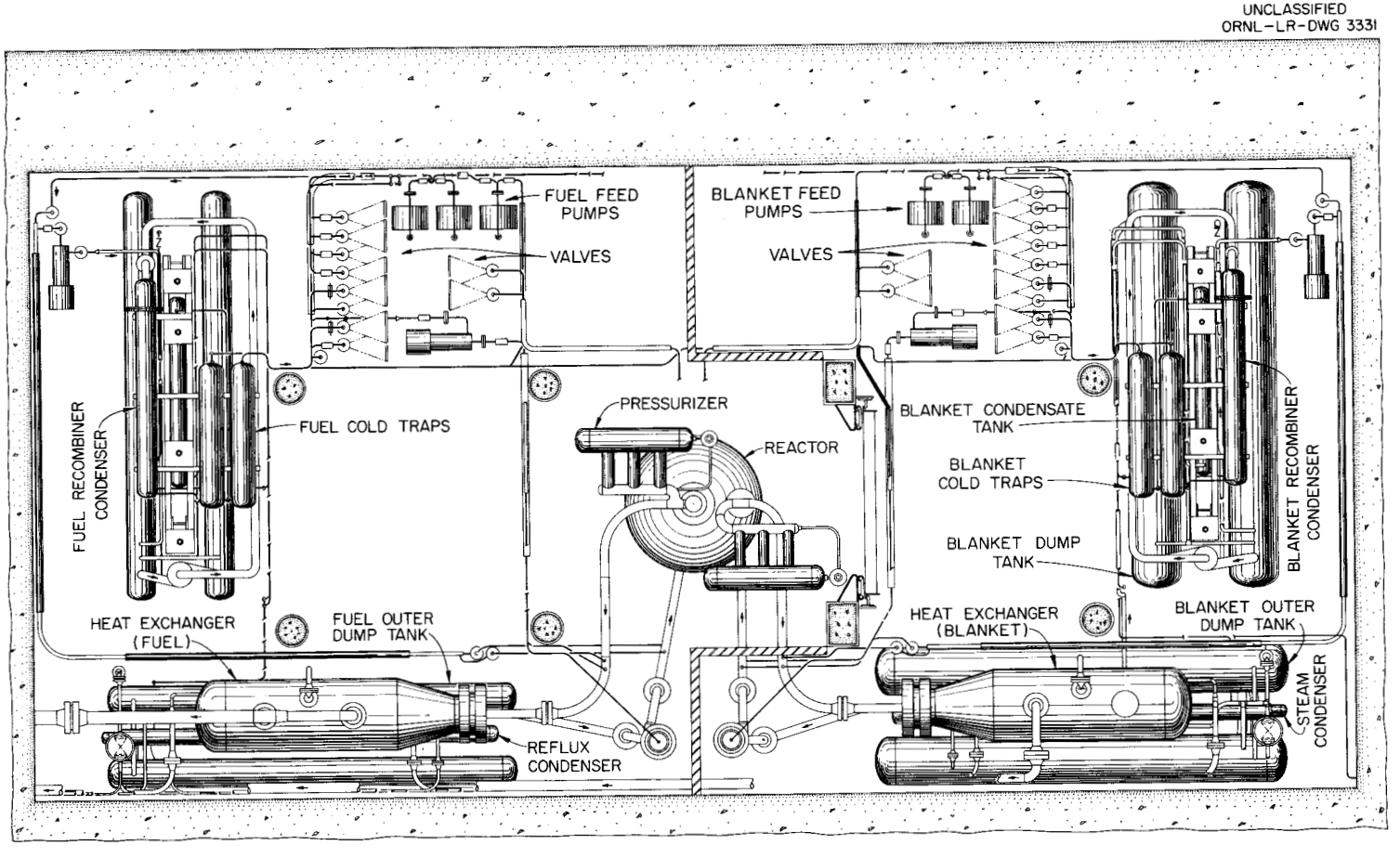

Fig. 5.1. Reactor Component Arrangement Plan.

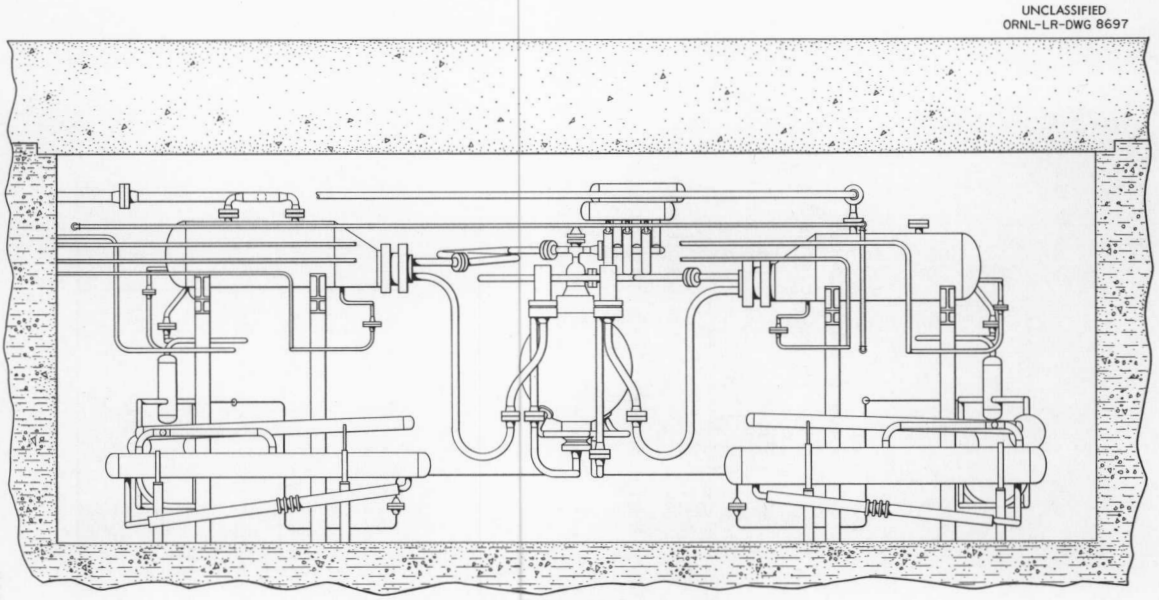

Fig. 5.2. Elevation View of HRT Equipment.

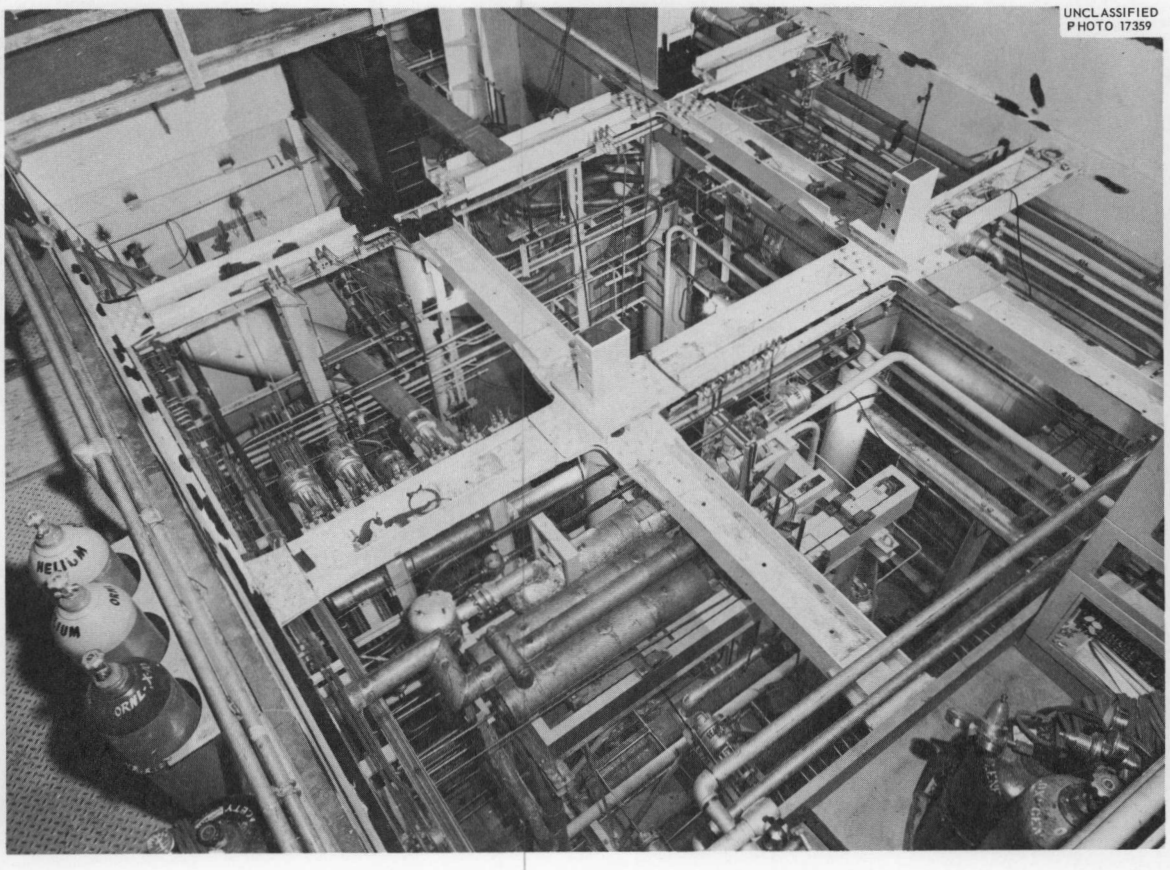

Fig. 5.3. Top View of Reactor Cell Equipment.

UNCLASSIFIED
ORNL-LR-DWG 12033

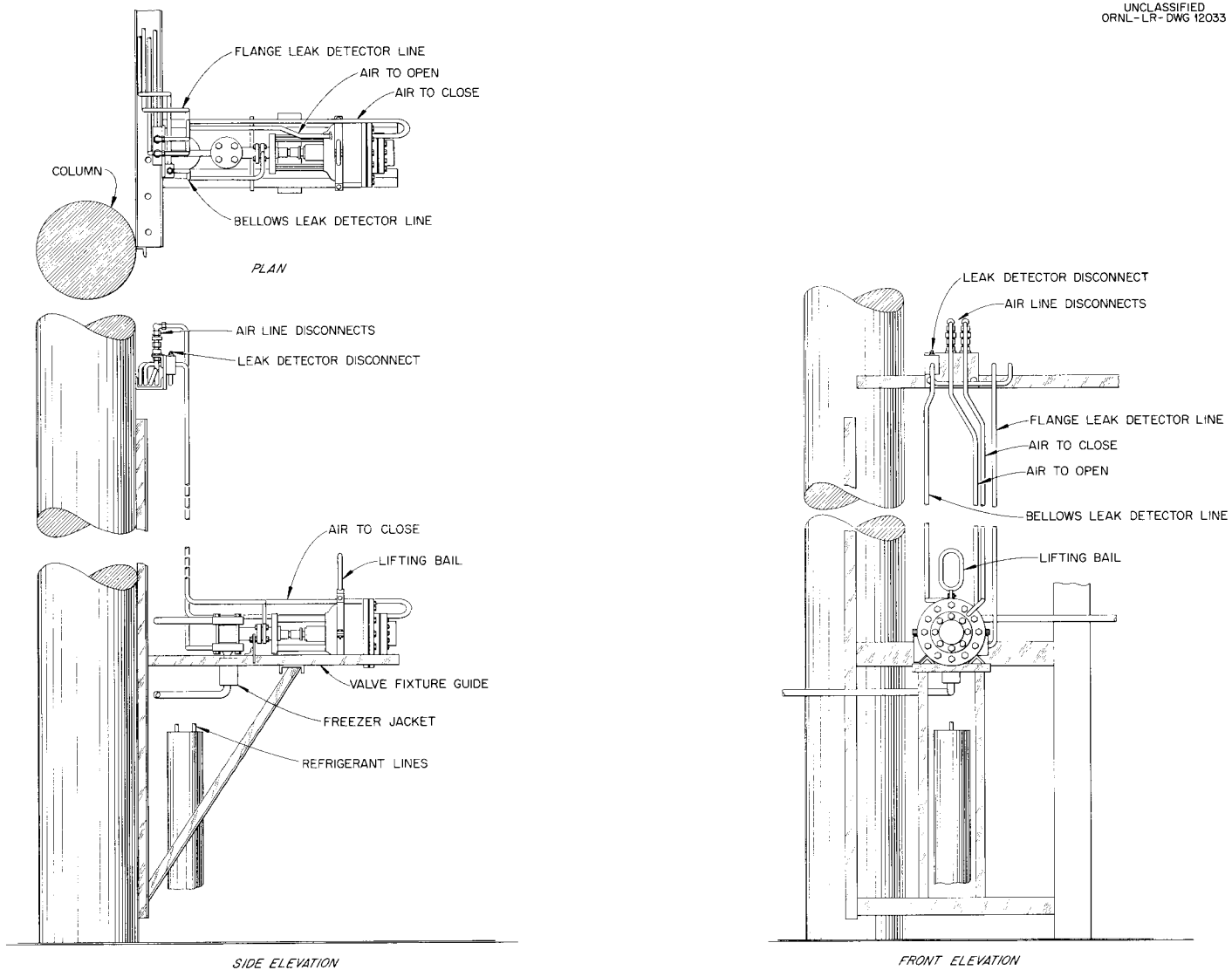

Fig. 5.4. Typical Low-Pressure Valve Installation.

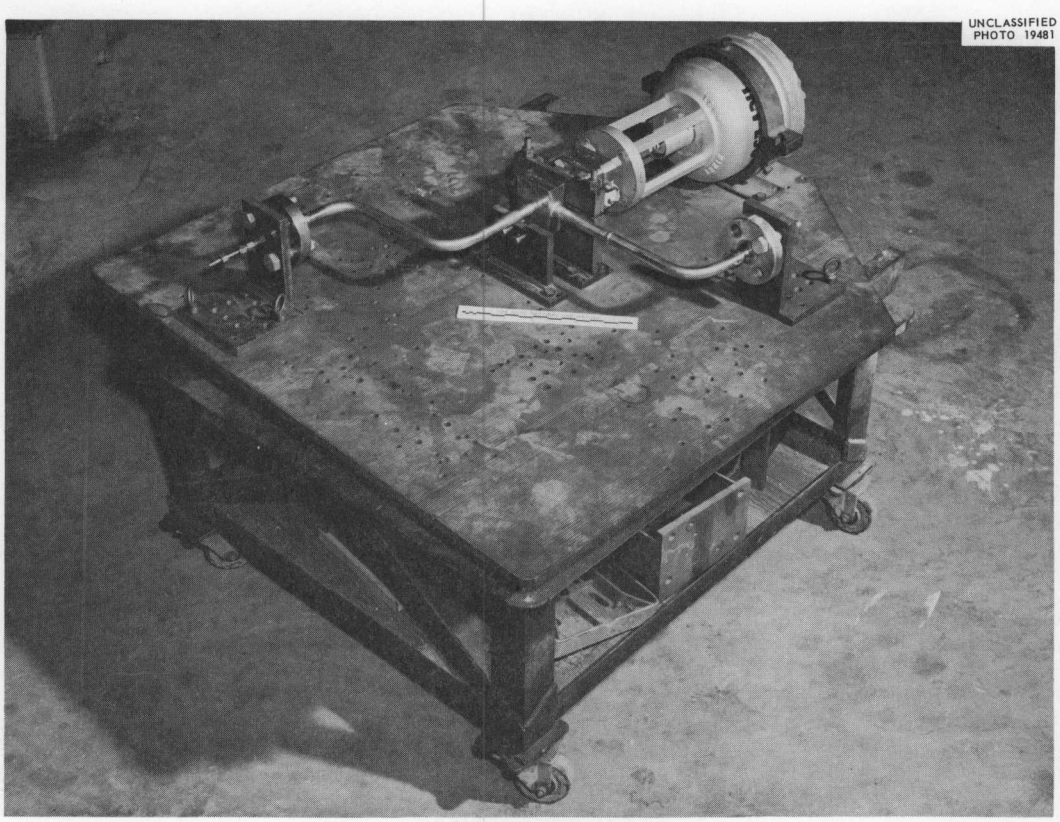

Fig. 5.5. High-Pressure Valve Jig.

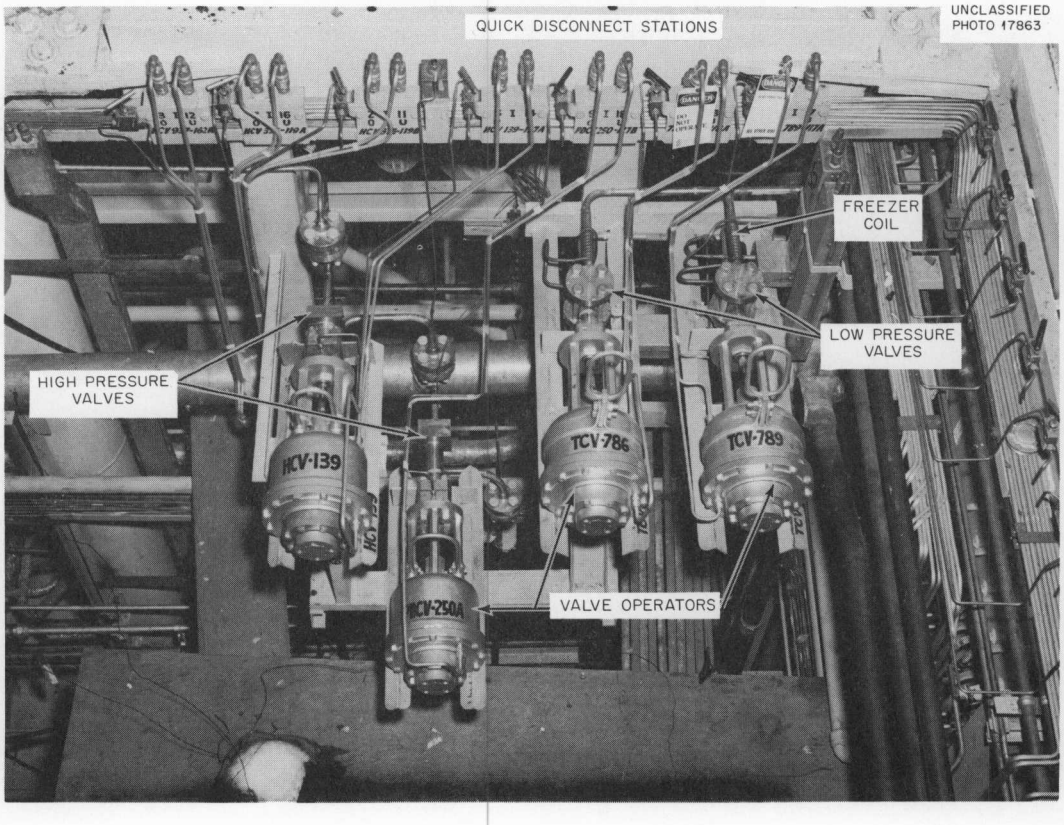

Fig. 5.6. Typical Valve Installation.

The fuel and blanket circulating pumps are mounted as shown in Fig. 5.7 to facilitate replacement. The pump base plate is provided with leveling jackscrews and large dowels for precise positioning. A jig located outside the reactor cell matches the cell pipe flange and pump dowel positions. Pump assemblies with their base plates, pipe extensions, and flanges are assembled on the jig so that a replacement pump will duplicate the original equipment.

A typical feed-pump installation is shown in Fig. 5.8. A unique feature is the method of bolting the flanged joints. The flange bolts are provided with extensions which pass through penetrations in the north shield wall to the control room. To remove the assembly, caps are removed from the cell wall penetrations and the extension bolts are disengaged. After the flanges are unbolted the supporting carriage is rolled away from the flanges and the unit is lifted off the carriage and removed from the cell. During replacement, guides on the permanent support platform position the new carriage assembly and thus align the flanges. A jig is available for assembly of new pumping units to ensure proper matching of the flanges.

A typical purge-pump installation is shown in Fig. 5.9. The pump-head assembly is mounted on a movable carriage, similar to the feed pumps, which also supports and positions the attached pipes and flanges. The carriage is supported on a platform welded to the north wall of the reactor cell; the assembly slides out from under the permanent flanges for removal. A jig is not necessary for assembling replacement units because the cell piping is sufficiently flexible to provide for mis-matching due to manufacturing tolerances.

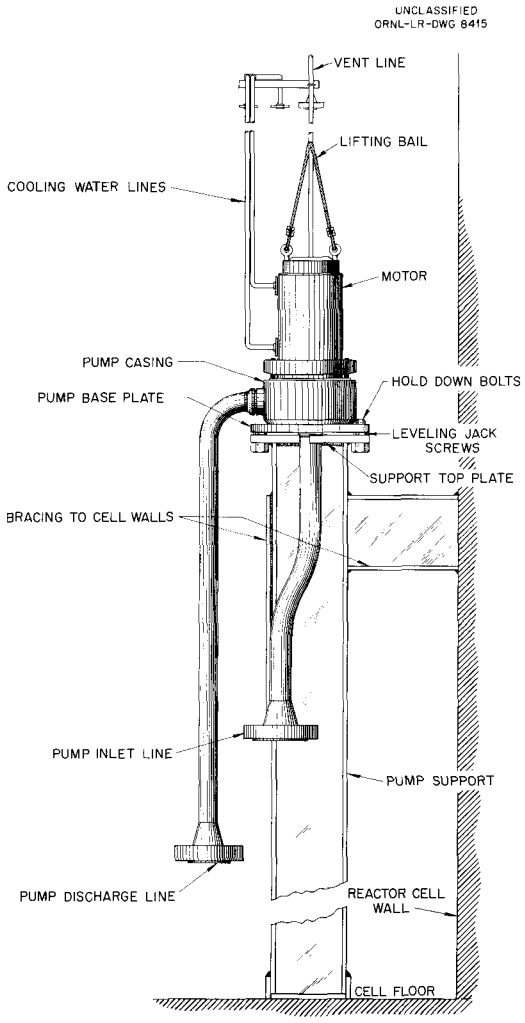

Fig. 5.7. Circulation-Pump Mount Assembly.

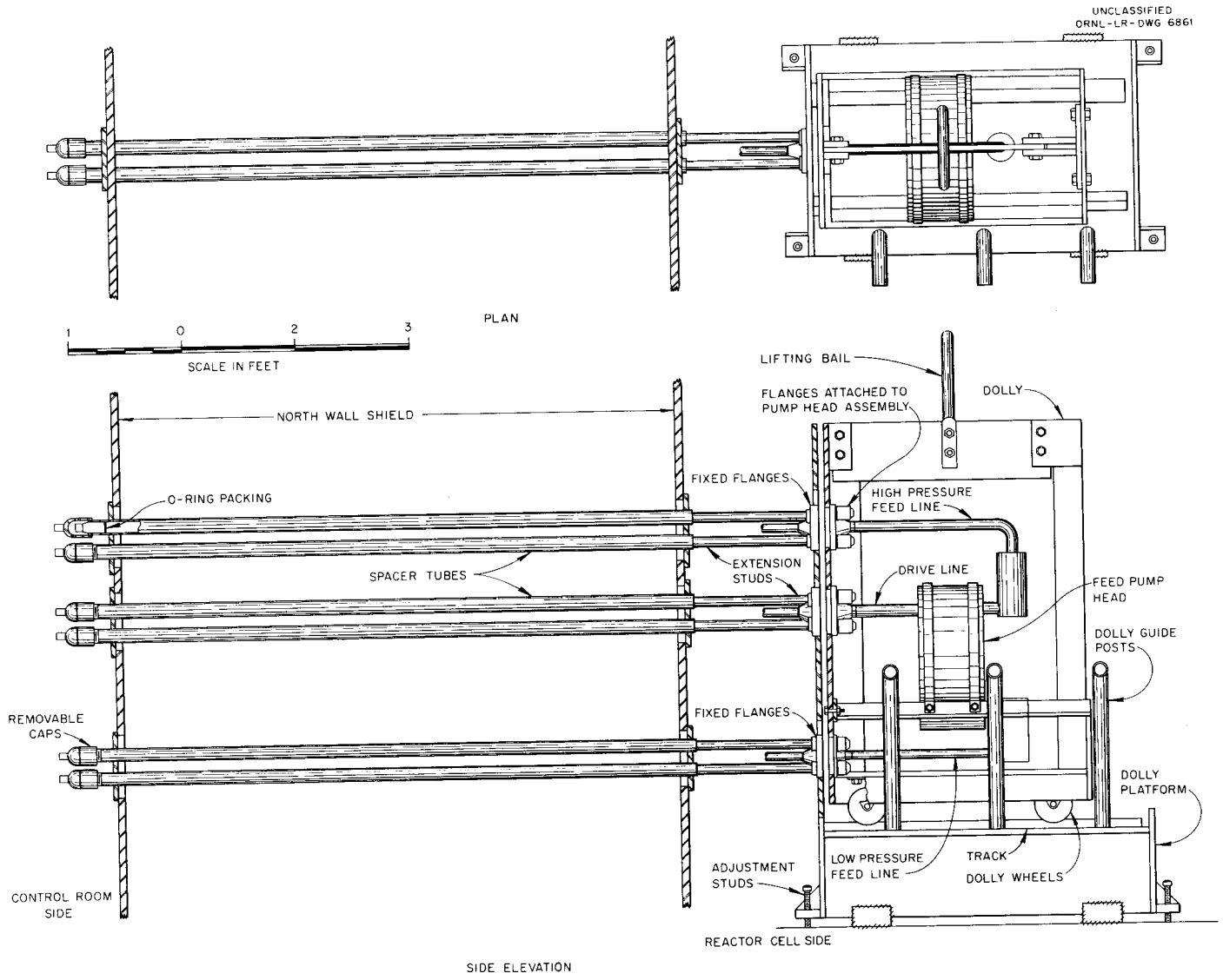

Fig. 5.8. Feed Pump Installation.

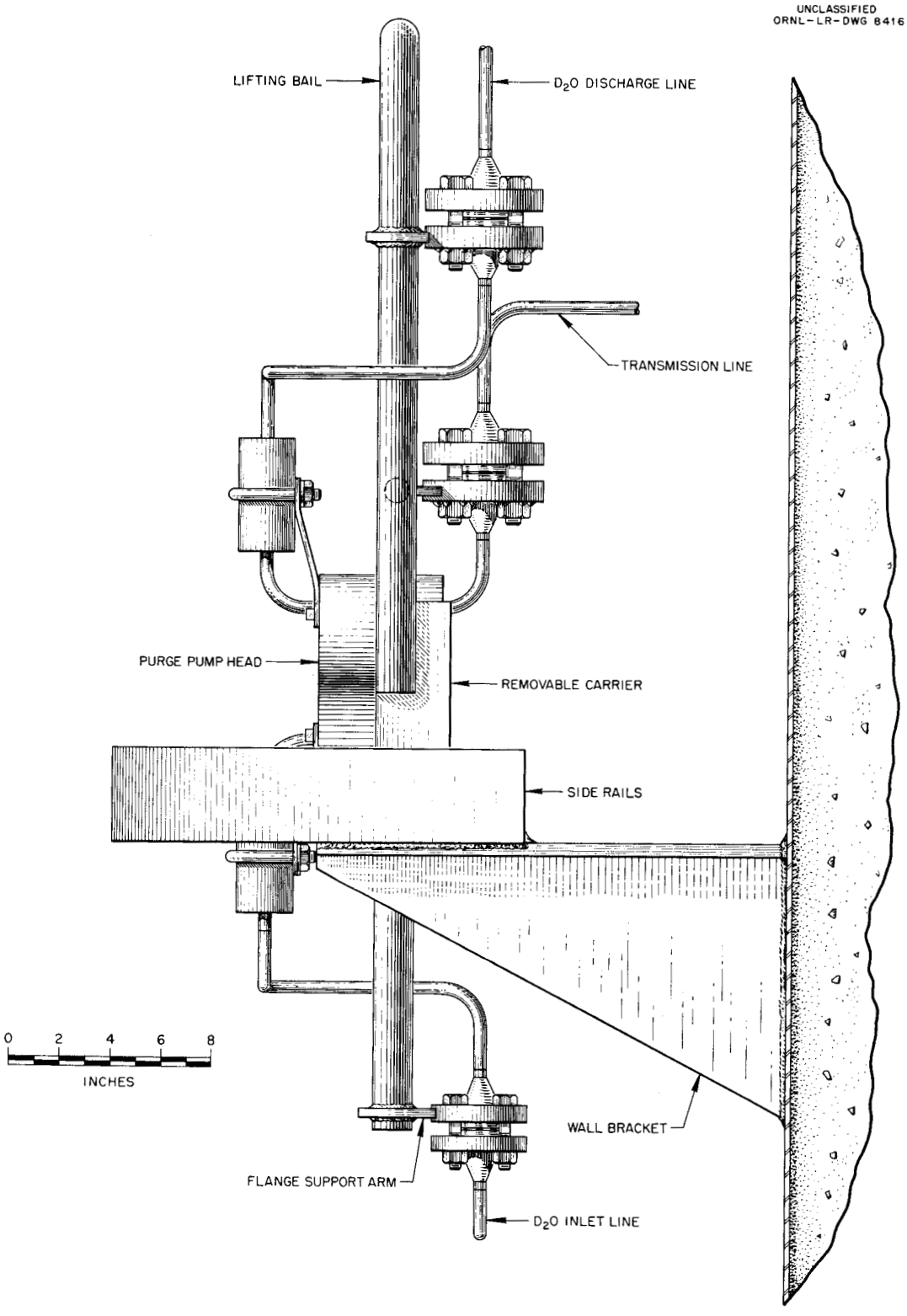

Fig. 5.9. Fuel Purge-Pump-Head Installation Assembly.

Large components, that is, primary heat exchangers, low-pressure unit assemblies, and the reactor vessel are removable but with considerable difficulty. It is not anticipated that these components be removed in routine fashion.

5.2 PIPING DESIGN

The cost of the HRE-2 piping system is one of the major items of expense; hence, considerable care was devoted to its selection, arrangement, and fabrication. The piping systems are classified according to the fluid transported; the classifications are:

1. high-pressure fuel and blanket piping,
2. low-pressure fuel and blanket piping,
3. reactor steam piping,
4. service piping (process steam, water, refrigeration).

An analysis of the high-pressure circulating system of a two-region, aqueous homogenous reactor indicated optimum velocities in the range of 40 to 60 fps.[3] However, experience with in-pile and out-of-pile corrosion loops operating at temperatures and with fuel solutions similar to those used in HRE-2 indicates excessive corrosion of stainless steel at flow velocities above about 25 to 30 fps.[4] For this reason the piping systems were sized on the basis of a maximum flow velocity of 20 fps in the fuel system and 10 fps in the blanket system. A comprehensive tabulation by line number, corresponding to the flowsheet numbering system, lists pipe sizes, material specification, and other pertinent information for all the piping in HRE-2.[5] Similar tabulations give surfaces areas, volumes, and related information for the fuel and blanket high- and low-pressure piping systems.[6,7]

The wall thicknesses specified for the high-pressure process piping were determined by the applicable formulae of the American Standard Code for Pressure Piping – ASA B31.1 – 1951, based on a design pressure of 2000 psi and an allowable stress value 12,000 psi for stainless steel at 600°F.[8] Table 5.1 gives the schedule of pipe sizes and thicknesses recommended for use in the high-pressure systems. Schedule-40 piping was specified for use in the low-pressure systems. As indicated in the table for pipe size greater than 1 in., the specified thickness does not correspond to a standard schedule number. Since a sizeable quantity of piping and fittings was purchased in one lot, no difficulty was encountered in obtaining the special wall thicknesses.

Stainless steel type 347, modified according to the appropriate ORNL specification,[9] was specified for the fuel and blanket piping systems. The steam system piping was specified according to the steam pressure in ORNL Specifications JS-1202-1, JS-1202-2, JS-1202-3, JS-1202-4, and JS-1202-5.[9]

The main circulating loops for the fuel and blanket high-pressure systems are constructed of $3\frac{1}{2}$-in. pipe with a 0.469-in. wall thickness. A comparative cost study of the use of pipe bends instead of welded pipe fittings showed a considerable savings in favor of bent shapes.[10] Further investigation of pipe bending and other operations used in fabricating piping systems indicated that the processes and fabricating conditions must be precisely defined if close control of metallurgical structure, physical dimensions, cleanliness, and other aspects of prefabricated piping are to be expected.[11] ORNL Specification HRP-5 was prepared to outline the requirements for machining, bending, welding, and heat treatment of prefabricated piping.[9] Based on these studies bent prefabricated pipe sections were specified for use in the high-pressure systems.

Special attention was given to the welding of the stainless steel piping and fittings. The inert-gas, shielded-arc, nonconsumable electrode process was used almost entirely. Weld specifications,[9] which exceed those required by the Broiler Code, were prepared to ensure welds of quality. All welds, in addition to being inspected with dye-penetrant were radiographed.

There are many possibilities for the development of excessive stresses in close-coupled heavy-walled piping systems like that employed in HRE-2. In order to reduce the likelihood of

Table 5.1. High-Pressure Piping Thickness Schedule

Nominal Pipe Size (in.)	Outside Diameter (in.)	Wall Thickness (in.)	Schedule Number
1/8	0.405	0.095	80
1/4	0.540	0.119	80
3/8	0.675	0.126	80
1/2	0.840	0.147	80
3/4	1.050	0.154	80
1	1.315	0.179	80
1 1/4	1.660	0.250	*a*
1 1/2	1.900	0.281	*a*
2	2.375	0.312	*a*
2 1/2	2.875	0.375	*a*
3 1/2	4.000	0.469	*a*
4	4.500	0.500	*a*

[a]Thickness does not correspond to commercial schedule number.

failure as a result of excessive stress, a maximum allowable working stress of 12,000 psi at 600°F was specified for the stainless steel from which the system is constructed. This stress value provides an additional margin of safety over the 15,000 psi stress value permitted in the ASME Boiler Code. As required by the ASA Code for Pressure Piping, the piping system was examined for flexibility and excessive stresses resulting from thermal expansion.[12,13] It was found that expansion bends were necessary in the main circulating loops in order to not exceed the allowable combined pressure and bending stress value of 18,000 psi.[12] Deflections and rotations were computed for those positions where pipe hangers were desired.[13] A tabulation of the piping supports has been reported – weight, deflections, and hanger settings are given.[14]

Consistent with the maintenance philosophy of HRE-2, piping adjacent to removable components must be readily disconnected. The ideal method for joining pipe in a highly radioactive system is by means of a remotely operated welding machine. Although such machines have been under development in recent years, no such device was available for routine use at the time design and construction of HRE-2 was under way. Therefore, it was necessary to specify mechanical joints for disconnecting the piping at the components. The leakage specification imposed on the piping system and flanged joints is based on the minimum leak which can be found with the available mass spectrometer leak detection equipment, namely, 0.1 cc of helium (STP) per day.

Ring-joint weld-neck flanges, corresponding to ASA B-16e Specifications, were selected for use in the fuel and blanket systems for the following reasons:[15]

1. This type of flange, when welded to a pipe, constitutes the most practical approach to an integral flange. Because of their lower and more uniform stress distribution, they provide a greater margin of safety than other flange types.
2. A simple, but extremely reliable, leak detection system is readily adapted for use in the ring-joint gasket design.
3. Previous experience with this joint in HRE-1 was very good.

For the high-pressure system flanges, ASA 1500-lb series was specified for pipe sizes through $\frac{3}{4}$-in; for 1 in. and above the 2500-lb series was specified. Although the 1500-lb series is rated by ASA for 2770 psi at 600°F, the more conservative practice of limiting the working pressure to the flange rating was followed for the larger flange sizes.

A number of flange development studies were conducted to permit observation of the characteristics of ring-joint weld-neck flanges during thermal-cycling operation. A very thorough discussion of the development and experiences with this type of flange has been reported.[16] Early tests showed that increased resilience in the bolt-flange assembly would be necessary to maintain leak-tight joints during thermal cycling. Since sufficient resilience could not be obtained by merely reducing the shank diameter of the bolts, ferrules were specified for use with the bolts to increase the flexibility. Figure 5.10 shows a typical flanged-joint assembly as used in the HRE-2. The ferrule dimensions and the reduced bolt shanks were specified to increase the resiliency of the bolted assembly to 2.5 times that of full shank bolts. In general the nuts are welded to one of the flanges and the bolts are removed upon disassembly.

A relationship between the number of times a bolt-nut assembly is tightened and the torque required, as indicated by a torque wrench, to produce a given bolt stress was shown to exist. Typical data are shown in Fig. 5.11 for two bolt sizes. It was also shown that an initial bolt stress of 45,000 psi asymptotically approaches a bolt stress of 30,000 psi with a number of thermal cycles. Typical data are shown in Fig. 5.12.

As a result of these tests, it was concluded that uniformly leaktight joints can be provided by adhering to strict quality control of flange components, including:

1. Closer tolerances and better finishes are maintained on both flange groove and gasket than are required by the ASA standards.
2. The hardness of the flange groove is at least 160 Brinnell, and the hardness of the gasket is at most 140 Brinnell.
3. Adequate precautions are taken in all stages from initial machining to final installation to protect the seating surfaces of rings and grooves from scratches or other damage.
4. Flange bolts are increased in length and provided with ferrules for increased resiliency.
5. Flange bolts are initially tightened to produce a stress of 45,000 psi ±10%.

However, it was not established how many of the above conditions were absolutely necessary.[16]

The first three of the above conditions are included in flange and gasket specifications, HRP-201a and HRP-202a.[9] Table 5.2 gives the recommended torque to produce an initial stress of 45,000 psi as a function of bolt size, assuming the bolts and nuts have been conditioned by several tightening-loosening cycles.

Each pair of flanges is provided with a leak detector fitting as shown in Fig. 5.10. Heavy water is maintained in the leak detector system (described in Sec 2.10) at a pressure in excess of the pressure inside the piping system.[17–19] Thus leakage of radioactive solutions is prevented by the higher pressure fluid in the gasket grooves.

During preoperational testing of HRE-2 it was discovered that a number of flanges had suffered from stress corrosion cracking in the gasket grooves. The trouble was traced to the use of

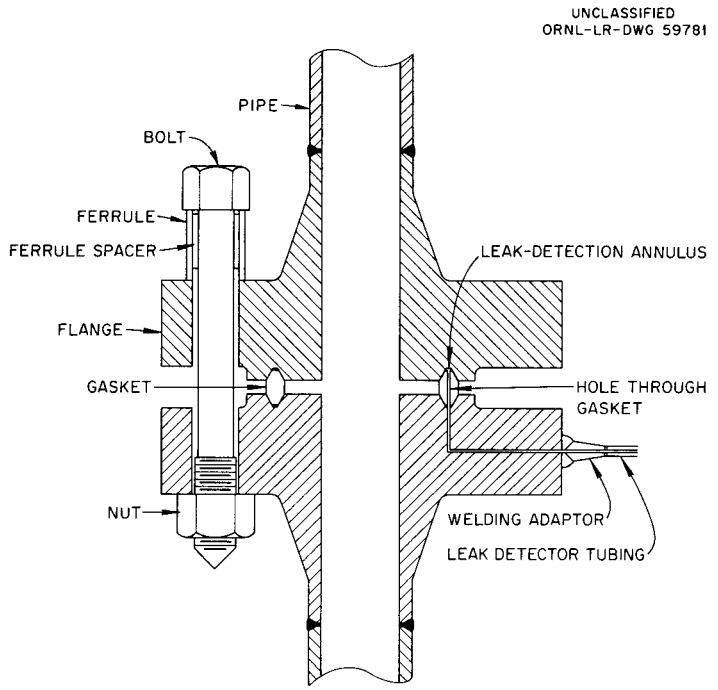

Fig. 5.10. HRE-2 Flanged-Joint Assembly.

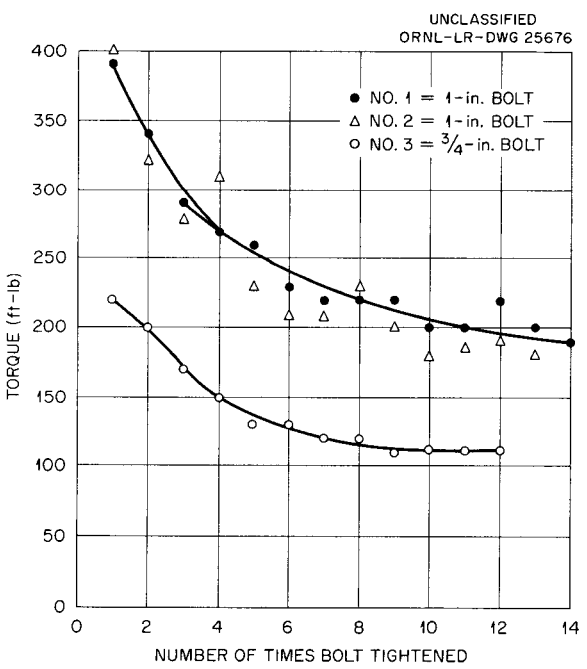

Fig. 5.11. Required Torque to Produce an Initial Bolt Stress of 45,000 psi.

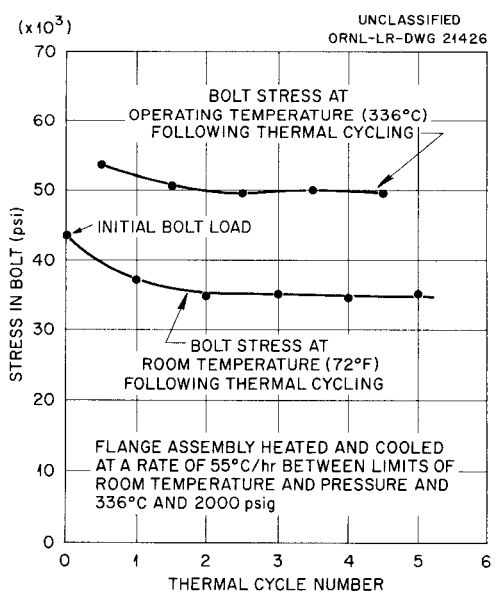

Fig. 5.12. Variation of Bolt Loading in a Flange as a Function of Thermal Cycling.

Table 5.2. Recommended Torque to Produce an Initial Bolt Stress of 45,000 psi

Bolt Size	Torque (ft-lb)
$\frac{1}{2}$ – 13 UNC	45
$\frac{5}{8}$ – 11 UNC	80
$\frac{3}{4}$ – 10 UNC	115
$\frac{7}{8}$ – 9 UNC	190
1 – 8 UNC	250
$1\frac{1}{8}$ – 8 N	400
$1\frac{1}{4}$ – 8 N	700
$1\frac{1}{2}$ – 8 N	960

a chloride-containing lubricant in the tube drawing operation of the leak detector tubing.[20,21] As a result of these difficulties all the high-pressure-system flanges and the leak detector tubing were replaced before reactor operation. Several flange bolt and ferrule failures were encountered in the flange development tests.[16] Observation of similar items installed in the reactor system also revealed severe cracks. Metallurgical investigations showed that improper quenching was the cause of the cracks.[22,23] All the flange bolts, nuts, and ferrules were replaced with properly quenched material.

A comprehensive tabulation of all the flanges in the reactor cell has been reported.[24] Included in the tabulation is flange size, bolt and ferrule information, location of flange, and leak detector information.

A number of investigations were conducted relative to the problems encountered in effectively insulating the piping systems and components inside the reactor containment cell.[25–30] A specification, HRT-1097a,[9] was prepared for the purchase of preformed insulation suitable for use under the following operating conditions:

1. Ambient temperature of 120°F.
2. Ambient pressure of 7.5 psia.
3. Relative humidity of 90%.
4. Maximum vessel or pipe temperature of 600°F.
5. No harmful effects or loss of insulating qualities following submergence under 25 ft of water at 80°F for 60 days. (Insulation need not be effective when submerged.)
6. Personnel will not have access to insulation when system is in operation.

Quotations on preformed insulation suitable for use in HRE-2 indicated a considerable investment for this type insulation. Tests were conducted on simple and less expensive methods for insulating the pipe.[25,26] As a result of these tests several layers of aluminum foil with a final

layer of aluminum screen to protect the foil was selected for insulating the piping systems inside the reactor cell. An insulation schedule was issued, giving the installation procedure and the number of layers of foil for each pipe line.[28]

5.3 MAINTENANCE

As discussed in the above section on system layouts, one of the early decisions in the conceptual design of HRE-2 was that the maintenance be accomplished by the use of long-handled tools with the equipment submerged, where possible. If complete submergence appeared impractical for some maintenance operations, at least partial flooding was to be utilized to shield the radioactivity emitted from components at lower elevations. The choice of direct, underwater maintenance was the outgrowth of ORNL's experience with underwater development work for the MTR, and with direct, dry maintenance techniques used for the HRE-1. A comprehensive discussion of maintenance practices employed on HRE-2 has been reported.[31]

Consistent with the maintenance philosophy, equipment was arranged to facilitate removal and replacement of components susceptible to early failure, that is, pumps, valves, and instruments. Components less susceptible to failure, that is, reactor vessel, primary heat exchangers, and low-pressure unit assemblies, present more difficult handling problems and were not arranged for ready removal. As a result of these concepts a large variety of tools was designed for specific applications. In general, commercial tools were modified and equipped with long handles to permit their use from a maintenance platform, located above the top shield as shown in Fig. 5.13.

The initial step in designing the reactor system for maintenance was to compile a list of all equipment which might require replacement during the course of operation. Each replacement job was then studied sufficiently to determine the necessary tools, jigs, fixtures, and auxiliary devices needed to perform the indicated maintenance operations. The next step in the overall program was a systematic study of each repair operation to minimize shutdown time, to provide adequate personnel protection, and to write detailed job procedures. In all, 70 job analyses were performed.

Some general purpose tools are shown in Figs. 5.14 and 5.15. An off-set spinner wrench is shown in Fig. 5.16. It is used for removing bolts quickly after they have been loosened with one of the high-torque wrenches, and for spinning the bolts snug before final tightening. A chain drive offset is provided to permit access to bolts partially hidden by obstructions. An air-line disconnect tool for use on instrumentation lines is shown in Fig. 5.17. A commercial torque multiplier (4:1 multiplication) is shown in Fig. 5.18. It is used for applying torques up to 2000 ft-lb. Input to the gear reducer is supplied by hand through an extension handle inside the lifting handle shown in the center of the photograph. A flange-spreader tool is shown in Fig. 5.19. It is used to separate low-pressure valve flanges to prevent damage to the ring gaskets during removal or insertion of the valve. The tool is shown in place with the valve moved back on its cell fixture. Figure 5.20 shows a scissors-jack type of tool (shown in position on a feed-pump head assembly), which is used for moving the feed and purge pump head assemblies back and forth on their support fixtures. A hydraulic torque wrench is shown in position on a $3\frac{1}{2}$-in. flange in Fig. 5.21. It is used to loosen or tighten bolts on flanges larger than 2-in. pipe size. A water-operated cylinder actuates a ratchet wrench to apply up to 2000 ft-lb of torque. Figures 5.22 and 5.23 show some of the remote tools being used to disconnect auxiliaries to the fuel circulating pump in a practice maintenance operation.

Freezer coils are attached to essentially all flanges normally expected to be opened for maintenance purposes to prevent entry of shield water into the system. Small quantities of shield water can be trapped above the ice plugs in the opened flanges. A flange dewatering device was developed to permit removal of this water by vacuum techniques during reassembly of the flange joints.[32]

Certain operations, that is, replacing the rupture disk assembly between the fuel and blanket pressurizers, can be performed through special shields without flooding the cell.[33] A shield plug is provided, shown in Fig. 5.24, through which tools and viewing devices can be inserted to perform the necessary operations. For other dry maintenance or partially wet maintenance operations, a portable shield was constructed.[34] Shown in Fig. 5.25, it provides for temporary replacement of any of the lower roof plugs with modular shields containing eccentric plugs through which tools and viewing devices can be manipulated.

A number of special tools and viewing devices were developed for maintenance operations within the reactor core.[35–41]

Fig. 5.13. Work Platform in Position.

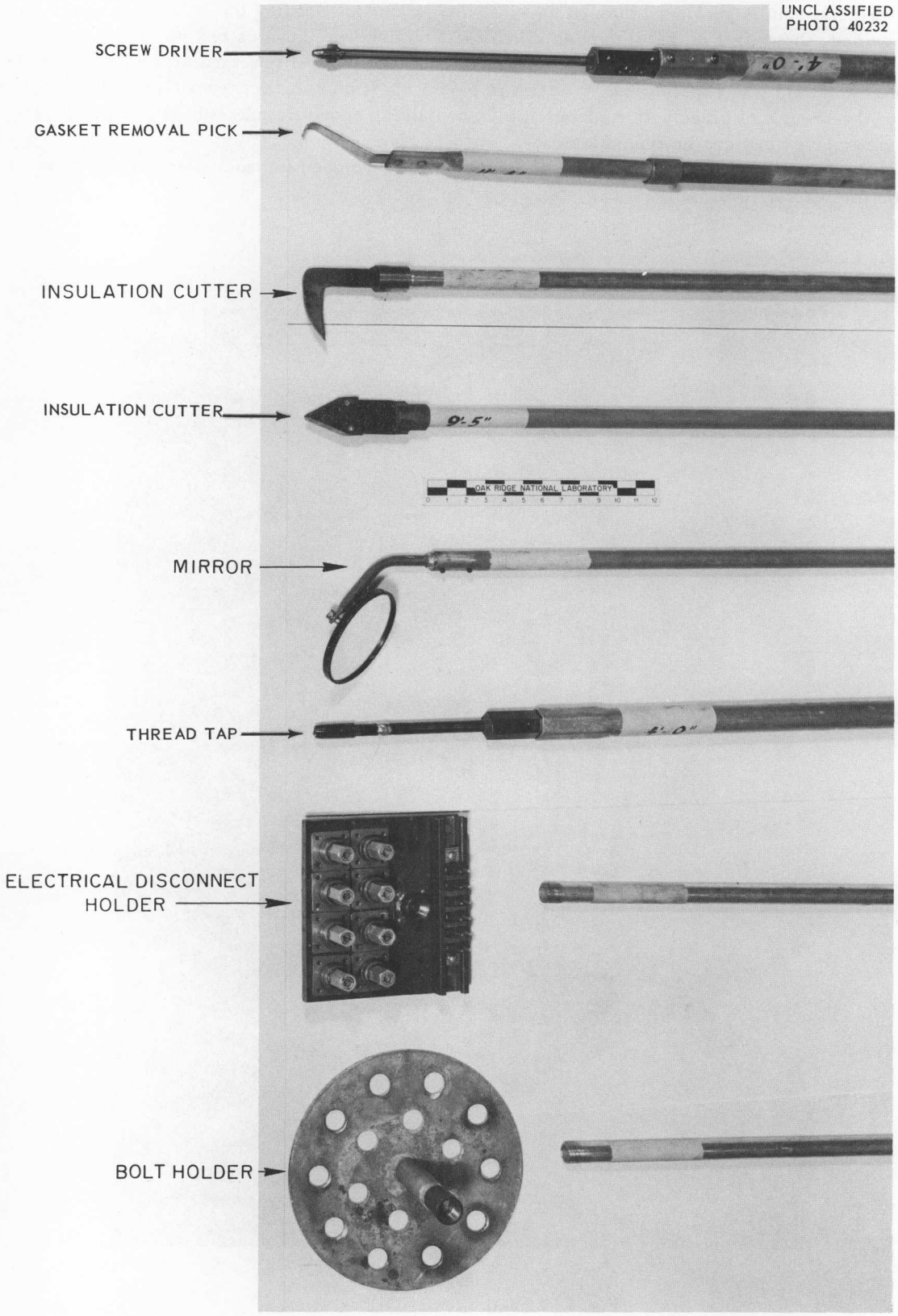

Fig. 5.14. Long-Handle Tools for HRT Maintenance.

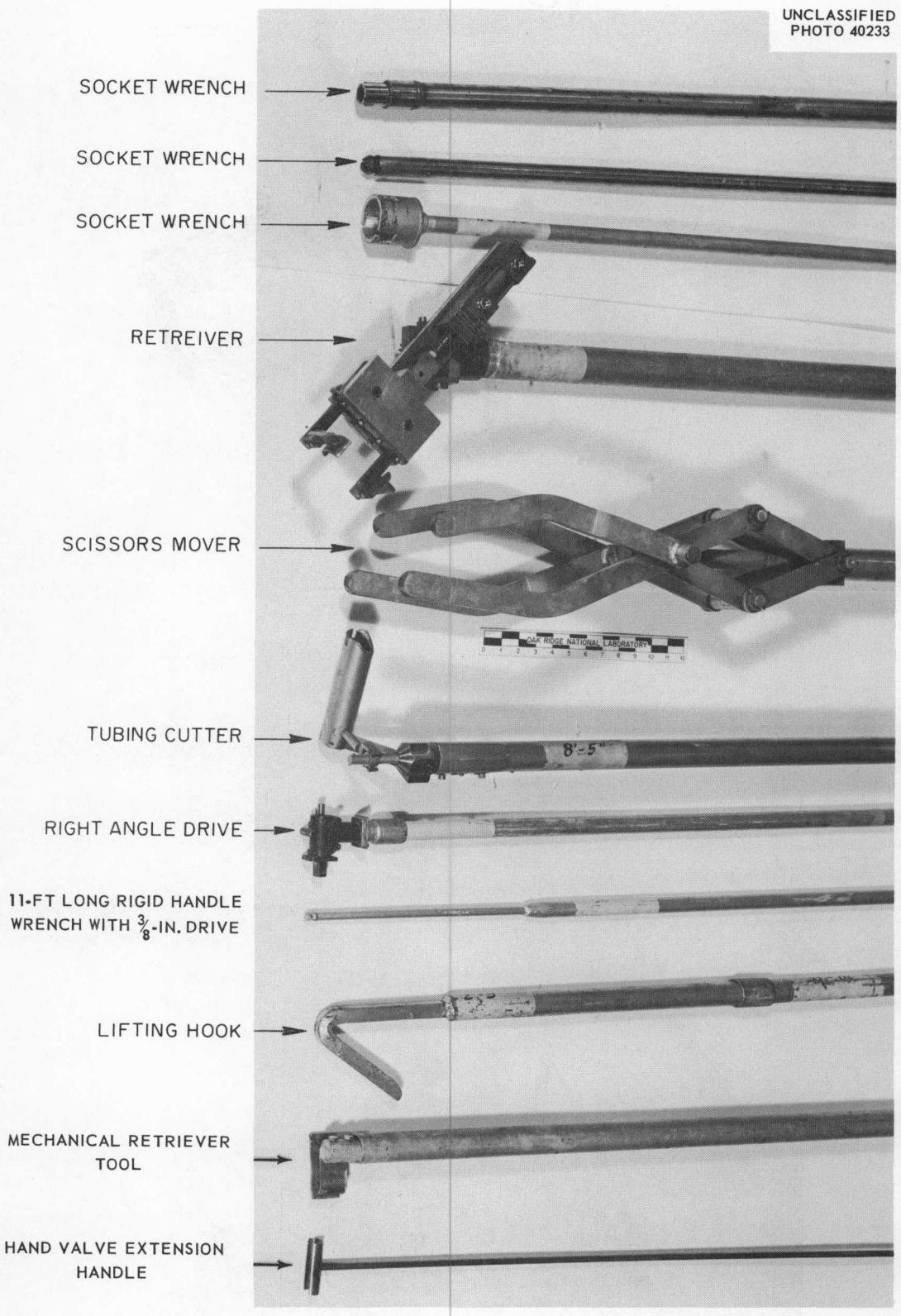

Fig. 5.15. Long-Handle Tools for HRT Maintenance.

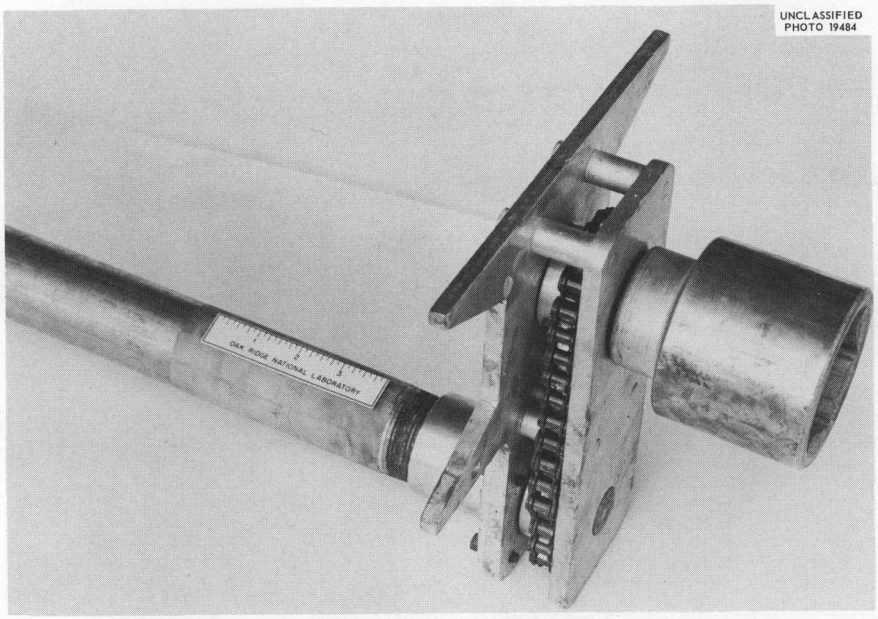

Fig. 5.16. Spinner Wrench.

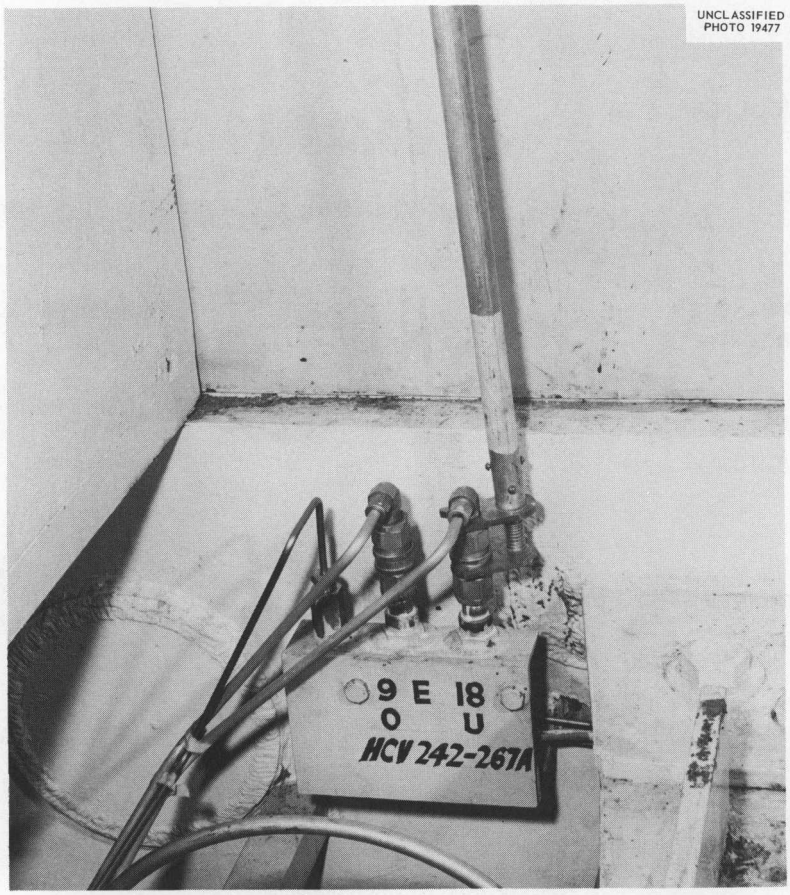

Fig. 5.17. Air-Line Disconnect Tool.

Fig. 5.18. Torque-Multiplier Wrench.

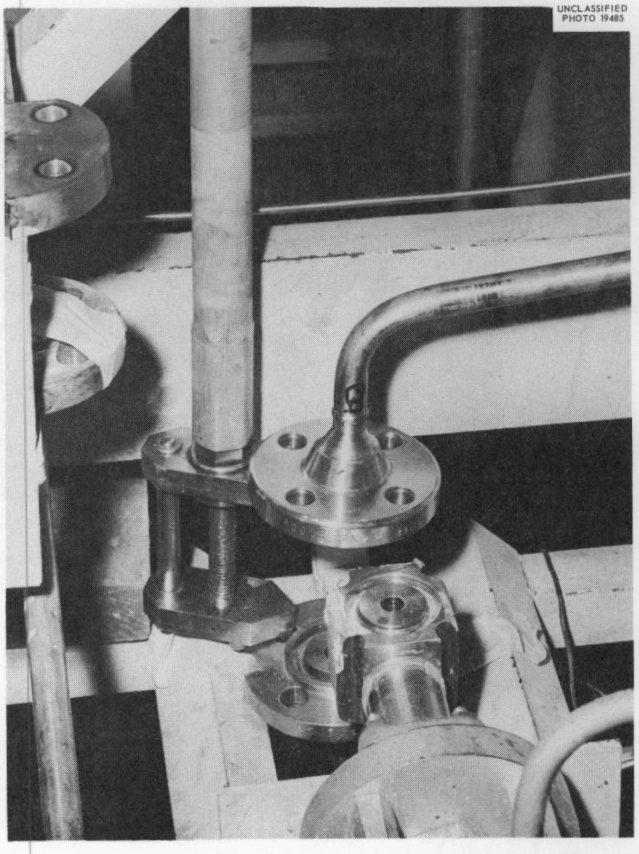

Fig. 5.19. Flange-Spreader Tool.

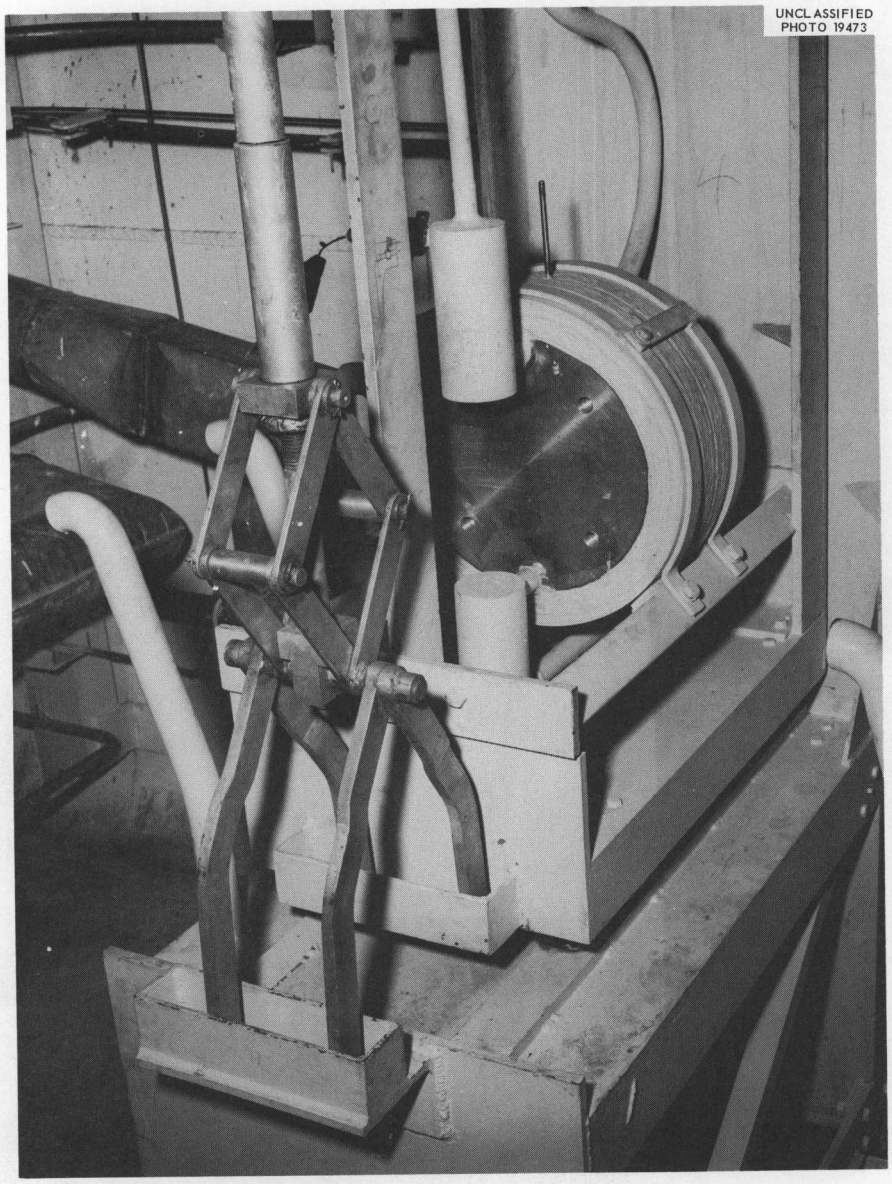

Fig. 5.20. Pump-Mover Tool.

Fig. 5.21. Hydraulic Torque Wrench in Working Position on Flange.

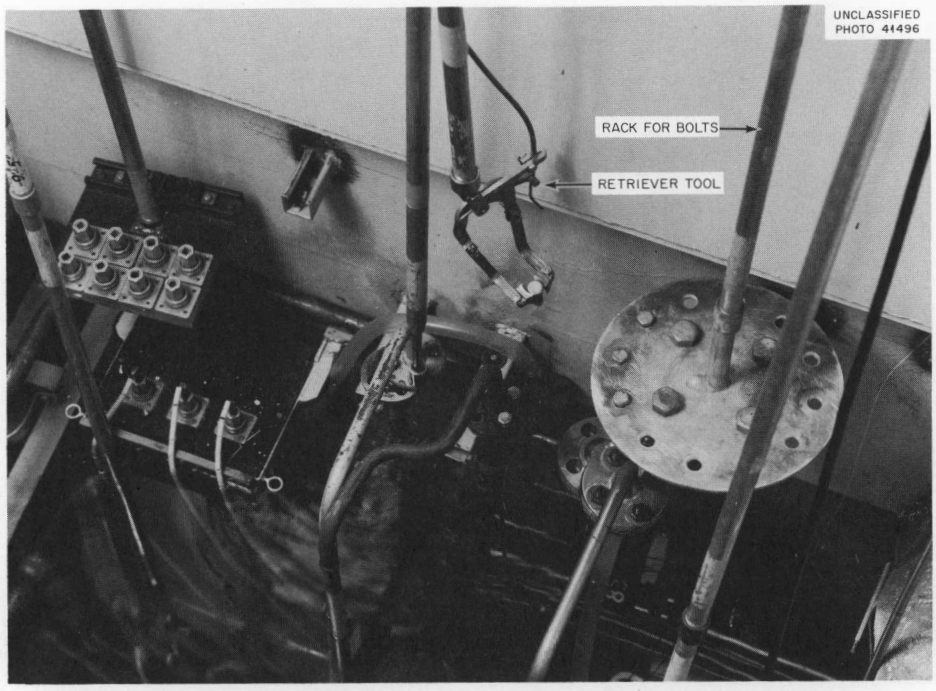

Fig. 5.22. Retriever Tool Moving Bolt to Storage Rack.

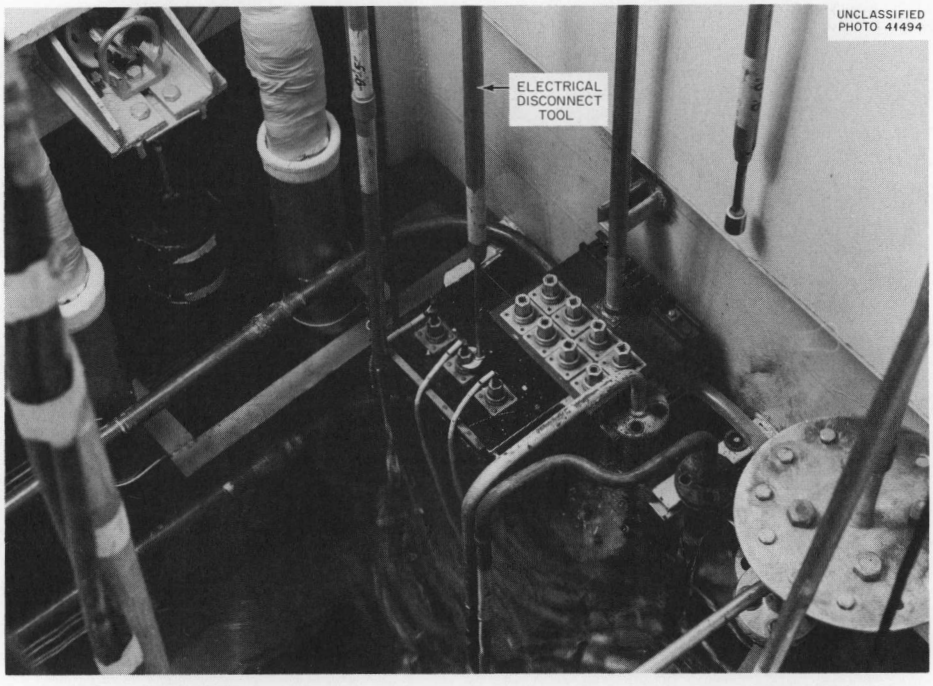

Fig. 5.23. Disconnecting Electrical Leads to Pump.

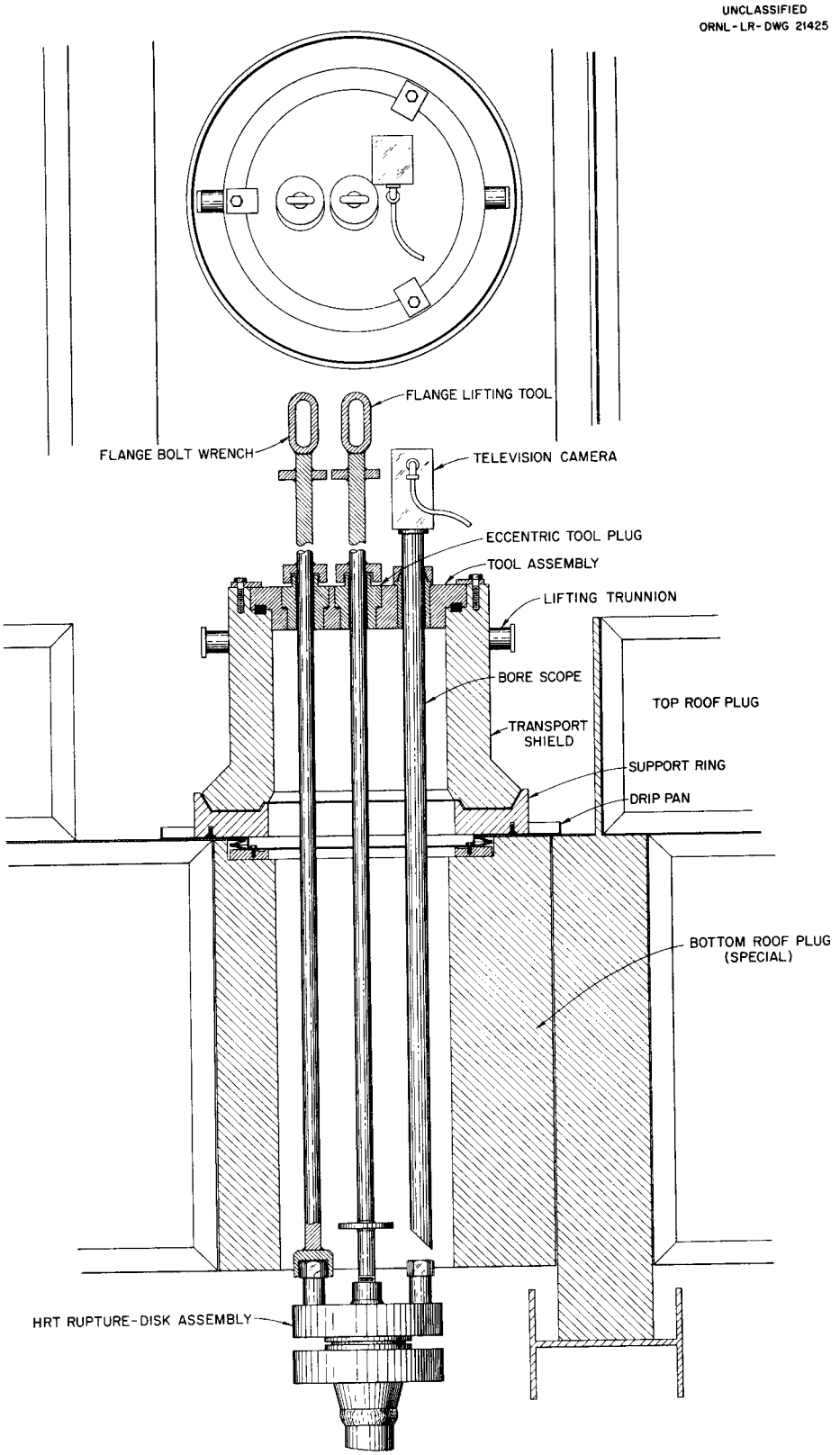

Fig. 5.24. Typical Tool and Shield Assembly.

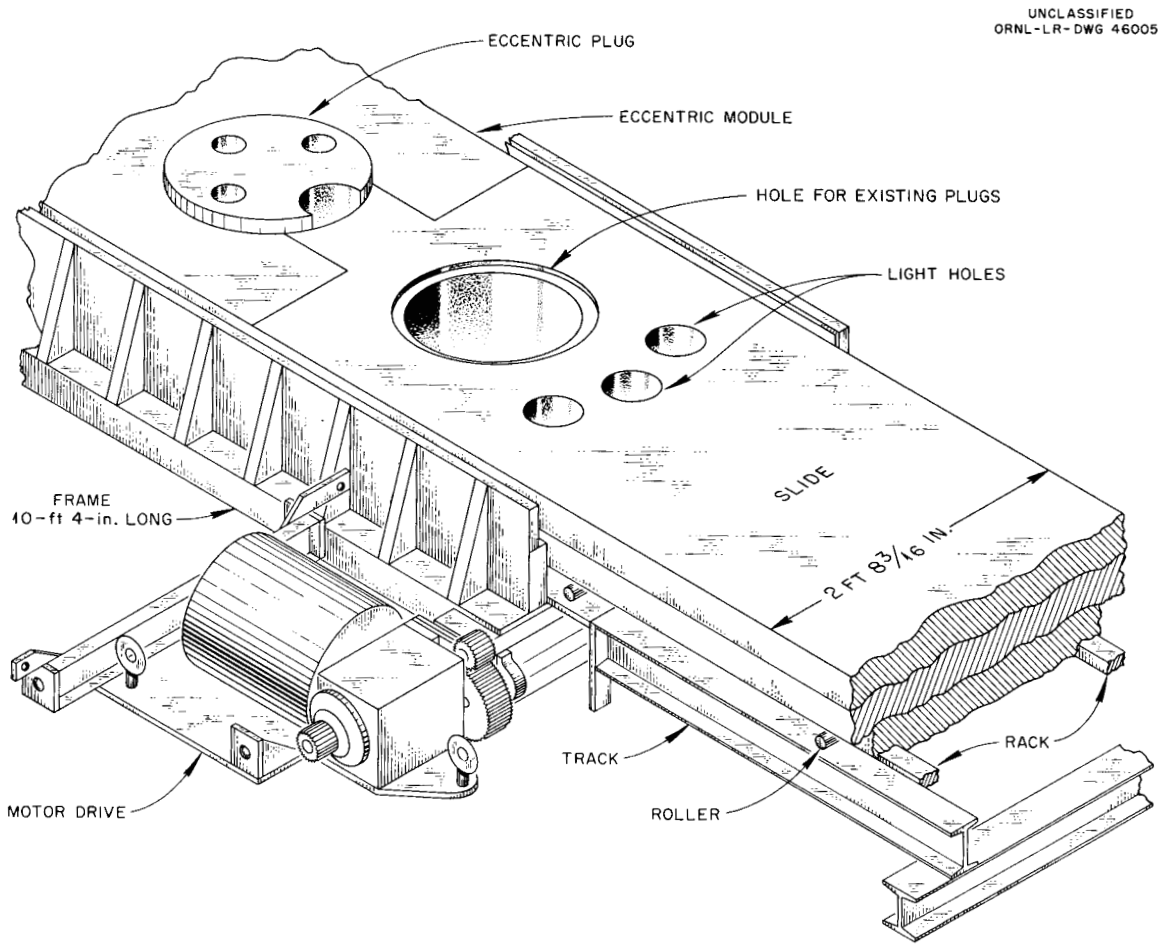

Fig. 5.25. HRT Dry-Maintenance Shield.

REFERENCES

1. S. E. Beall and J. A. Swartout, *Proc. Intern. Conf. Peaceful Uses Atomic Energy, Geneva, 1955* **3**, 263–85 (1955).
2. W. R. Gall, *Installation of High-Pressure Valves*, ORNL CF-56-2-5 (Feb. 2, 1956).
3. P. N. Haubenreich, *Estimation of Most Economical Velocity in Reactor Circulating Systems*, ORNL CF-54-5-26 (May 5, 1954).
4. H. F. McDuffie, *Corrosion by Aqueous Reactor Fuel Solutions*, ORNL CF-56-11-72 (Nov. 14, 1956).
5. W. L. Wright, *HRT Line Schedule – Issue No. 5*, ORNL CF-55-8-133, rev 5 (Dec. 9, 1957).
6. R. Van Winkle, *Calculated Internal Surface Areas in the HRT High Pressure Fuel and Blanket Systems*, ORNL CF-56-5-89 (May 10, 1956).

7. R. Van Winkle, *Tabulation of Line Lengths, Areas, and Volumes in the HRT Fuel and Blanket Low-Pressure Systems*, ORNL CF-58-4-126 (Apr. 22, 1958).

8. F. C. Zapp, *HRP Piping*, Inter-Office Memo to Distribution (Mar. 30, 1954).

9. W. R. Gall, *Specifications for HRT Reactor and Service Systems*, ORNL CF-55-8-111 issue No. 2 (June 7, 1956).

10. R. G. Pitkin, *Contrasting Costs of Bent Pipe Shapes Versus Welded Lengths and Fittings*, ORNL CF-54-10-107 (Oct. 21, 1954).

11. R. G. Pitkin, *Trip to Crane Company, M. W. Kellogg and Vitro Corporations Regarding Pipe Fabrication*, ORNL CF-55-3-101 (Mar. 16, 1955).

12. M. I. Lundin, *HRT High Pressure System Piping Stresses and Equipment Nozzle Reactions*, ORNL CF-55-6-150 (June 28, 1955).

13. M. I. Lundin, *HRT High Pressure System Piping Line Deflections and Reactions on Equipment Nozzles*, ORNL CF-55-8-83 (Aug. 10, 1955).

14. W. F. Taylor, *HRT Process Piping Hanger Settings*, ORNL CF-56-3-122 (Mar. 19, 1956).

15. W. R. Gall, *Selection of Flange Design for High Pressure Service in the HRT*, ORNL CF-54-6-74 (June 9, 1954).

16. J. N. Robinson, M. I. Lundin, and I. Spiewak, *Development of Ring-Joint Flanges for Use in the HRE-2*, ORNL-3165 (Dec. 6, 1961).

17. J. E. Kuster, *HRT Leak Detector System*, ORNL CF-56-4-105 (Apr. 20, 1956).

18. E. A. Mason and H. A. McLain, *Circulating Leak Detector System for HRT Flanges*, ORNL CF-57-4-38 (Apr. 9, 1957).

19. E. A. Mason, *Final Process Design for Leak Detector System for Special Flanges*, ORNL CF-57-5-96 (May 29, 1957).

20. G. M. Adamson *et al.*, *Metallurgical Examination of HRT Leak Detector Tubing and Flanges*, ORNL CF-57-1-109 (Jan. 31, 1957).

21. E. G. Bohlmann and G. M. Adamson, *Stress-Corrosion Cracking Problems in the HRT*, ORNL CF-57-1-143 (Jan. 31, 1957).

22. J. P. Hammond, *Preliminary Results and Recommendations Relative to Investigation of HRT Flange Bolts*, ORNL CF-56-11-39 (Nov. 8, 1956).

23. J. P. Hammond, G. M. Adamson, and T. M. Kegley, *Cracks in HRT Flange Bolts and Ferrules*, ORNL CF-57-1-163 (Jan. 29, 1957).

24. C. A. Burchsted and W. Terry, *List of Stainless Steel, Ring Joint Flanges in the HRT*, ORNL CF-58-9-61 (Sept. 24, 1958).

25. R. G. Akins and I. Spiewak, *Aluminum Insulation*, Inter-Office Memo to C. B. Graham (June 23, 1955).

26. I. Spiewak, *Aluminum Insulation (Report No. 2)*, ORNL CF-55-8-121 (Aug. 24, 1955).

27. F. C. Zapp, *HRT Aluminum Insulation (Within Cell)*, ORNL CF-55-9-36 (Sept. 7, 1955).

28. F. C. Zapp and R. E. Schappel, *Aluminum Foil Insulation Schedule*, ORNL CF-55-10-126, rev I (Apr. 4, 1957).

29. M. C. Lawrence, *Pressurizer Thermal Insulation*, ORNL CF-56-5-55 (May 1, 1956).

30. R. F. Hughes, *Efficiency of HRT Pressurizer Heater Insulation*, ORNL CF-56-11-90 (Nov. 13, 1956).

31. S. E. Beal and R. J. Jurgensen, *Direct Maintenance Practices for the HRT*, ORNL CF-58-4-101 (Apr. 18, 1958).

32. B. D. Draper and T. H. Haynes, *Design and Development of a Flange Dewatering Device*, ORNL CF-58-1-42 (Feb. 10, 1958).

33. F. C. Zapp, R. G. Pitkin, and C. J. Claffey, *Stepwise Procedures for Remote Handling for Rupture Disk Assembly and Fuel and Blanket Sampler Holders*, ORNL CF-57-11-1 (Nov. 15, 1957).

34. P. P. Holz, *Dry Maintenance Facility for the HRT*, ORNL CF-60-10-85 (Oct. 11, 1960).

35. P. P. Holz, *Some Miscellaneous Maintenance Tools Used to Manipulate Loose Objects in the HRT Core*, ORNL CF-59-11-123 (Nov. 17, 1959).

36. R. Blumberg, *Design and Development of Tools to Cut Loose the Diffuser Screens and Resize the Access Flange in the HRT Core Vessel*, ORNL CF-59-11-124 (Nov. 18, 1959).

37. B. D. Draper and E. C. Hise, *Remote Maintenance Procedure Report*, ORNL CF-59-11-128 (Nov. 26, 1959).

38. P. P. Holz, *Underwater Electric Arc Cutting Manipulator for HRT Screen Removal*, ORNL CF-59-11-130 (Nov. 26, 1959).

39. P. P. Holz, *Additional Miscellaneous Maintenance Tools Used in the HRT Core*, ORNL CF-60-9-103 (Sept. 26, 1960).

40. P. P. Holz, *Miniature TV Camera Manipulator*, ORNL CF-59-11-129 (Nov. 26, 1959).

41. J. S. Culver, *Viewing Equipment for Use in the HRT Core and Blanket Vessels*, ORNL-2886 (Mar. 1, 1960).

6. Reactor Physics, Safety, Stability, and Hazards

6.1 INTRODUCTION

This section summarizes the reactor static and kinetic studies and hazards evaluation of HRE-2. The scope of these topics is limited to those studies performed prior to reactor criticality. The statics calculations were done for the usual quantities, such as critical concentrations, critical mass, total heat sources, neutron generation times, temperature and density coefficients of reactivity, and conversion ratios for various blanket combinations.[1] Kinetic studies of HRE-2 were conveniently subdivided into reactor safety and stability.[2,3] As used herein, safety refers to the events which happen as a result of the initial power excursion following a reactivity addition, whereas stability refers to events which occur as a result of subsequent power surges. Stability studies in general concern time intervals long in comparison with those involved in safety studies, and may necessitate mathematical representation of the entire reactor system. Both safety and stability of a system are dependent upon the generalized equations of motion.

The system was examined in detail with respect to the possibility of radioactivity escaping from the reactor and its containment vessel.[4,5] These studies indicated little likelihood of hazardous concentrations of radioactive material escaping from the system and that the dangers to operating personnel and to the public compare favorably with normally accepted risks.

6.2 PHYSICS

In late 1953 the HRP Steering Committee suggested that a reactor experiment be designed and built to determine the long-term reliability under corrosion and radiations conditions similar to those expected in large-scale, two-region, breeder reactors.[6,7] These general considerations imply the use of a zirconium core tank and uranium concentrations in the range of 5 to 10 g/liter. The core diameter should be as small as possible to provide reasonable power densities at a low total power. To achieve the desired fuel concentration at minimum total power, the moderator and reflector should be D_2O. A series of preliminary calculations indicated a 32-in.-diam, Zircaloy-2 core tank inside a 60-in.-ID pressure vessel would satisfy the fuel concentration requirements.[8–11] The effect of core diameter on critical concentration is shown in Fig. 6.1, based on a fixed pressure vessel diameter and computed by a harmonics method.[1]

As discussed earlier (see Sec 1.2) three phases of reactor operation were anticipated: (1) operation with a D_2O reflector to conduct experiments and to establish system and component reliability, (2) operation with a uranyl sulfate blanket to demonstrate plutonium production, and (3) operation to demonstrate breeding.[12–14]

Using reported nuclear constants,[15] calculations were performed by a harmonics method[1] to determine the critical concentration as a function of temperature for each mode of reactor operation.[16–19] The results of these calculations are shown in Figs. 6.2–6.4. (A uniform temperature was assumed throughout the reactor, the core solution was assumed to be 93% enriched U^{235} as uranyl sulfate in D_2O, and heavy water was assumed to be 99.75% D_2O and 0.25% H_2O.[1] The effect of a corrosion specimen holder on critical concentration was investigated and found to increase the concentration about 0.6 g of U^{235} per kg of D_2O at 280°C.[20–21]

Later calculations of critical concentrations of various core-blanket combinations by a multigroup, multiregion code (Eyewash) produced results which compared favorably with the results of the harmonics method.[22] For example, a critical concentration of 7.55 g of U per liter (9.03 g of U per kg of D_2O) was calculated for the D_2O reflected reactor at 280°C, compared to the harmonics method calculation of 8.1 g of U per liter (9.7 g of U per kg of D_2O). Calculations were also done by a two-group, two-region method for comparison. The critical concentrations obtained with the two-group model were found to be consistently 20 to 30% lower than those obtained with the multigroup model. The difference is attributed to an inadequate treatment of fast fissions and fast leakages by the two-group model in D_2O moderated reactors the size of HRE-2.

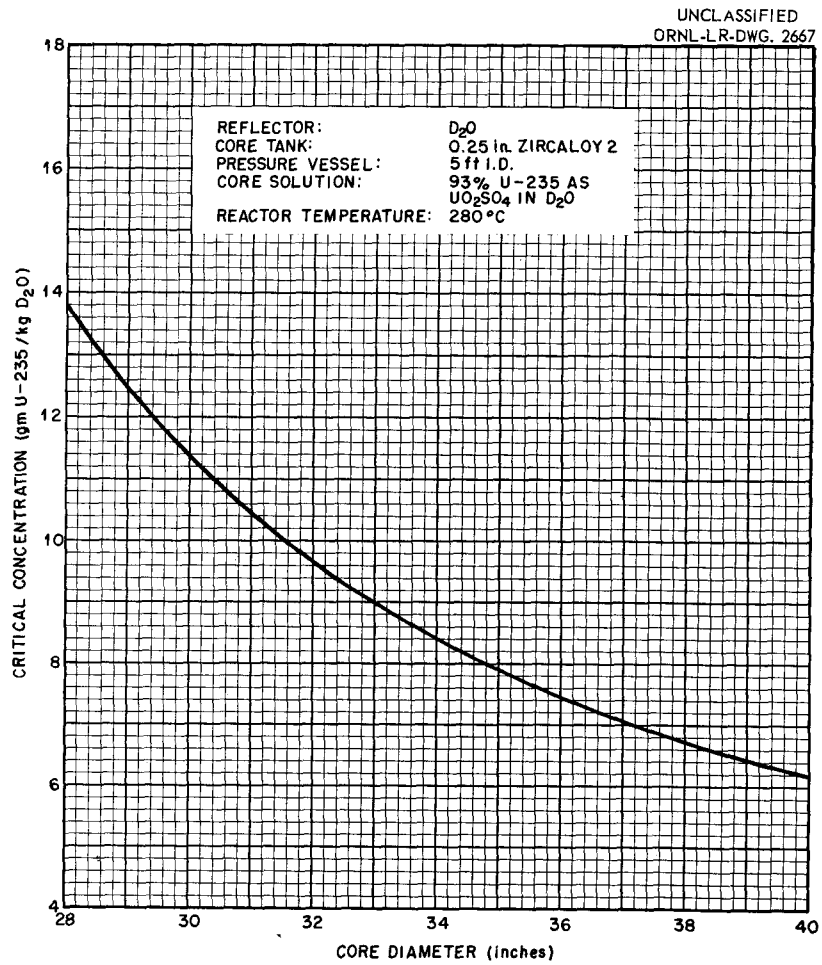

Fig. 6.1. Critical Concentration of U^{235} in Core of Spherical Two-Region D_2O-Moderated Reactors.

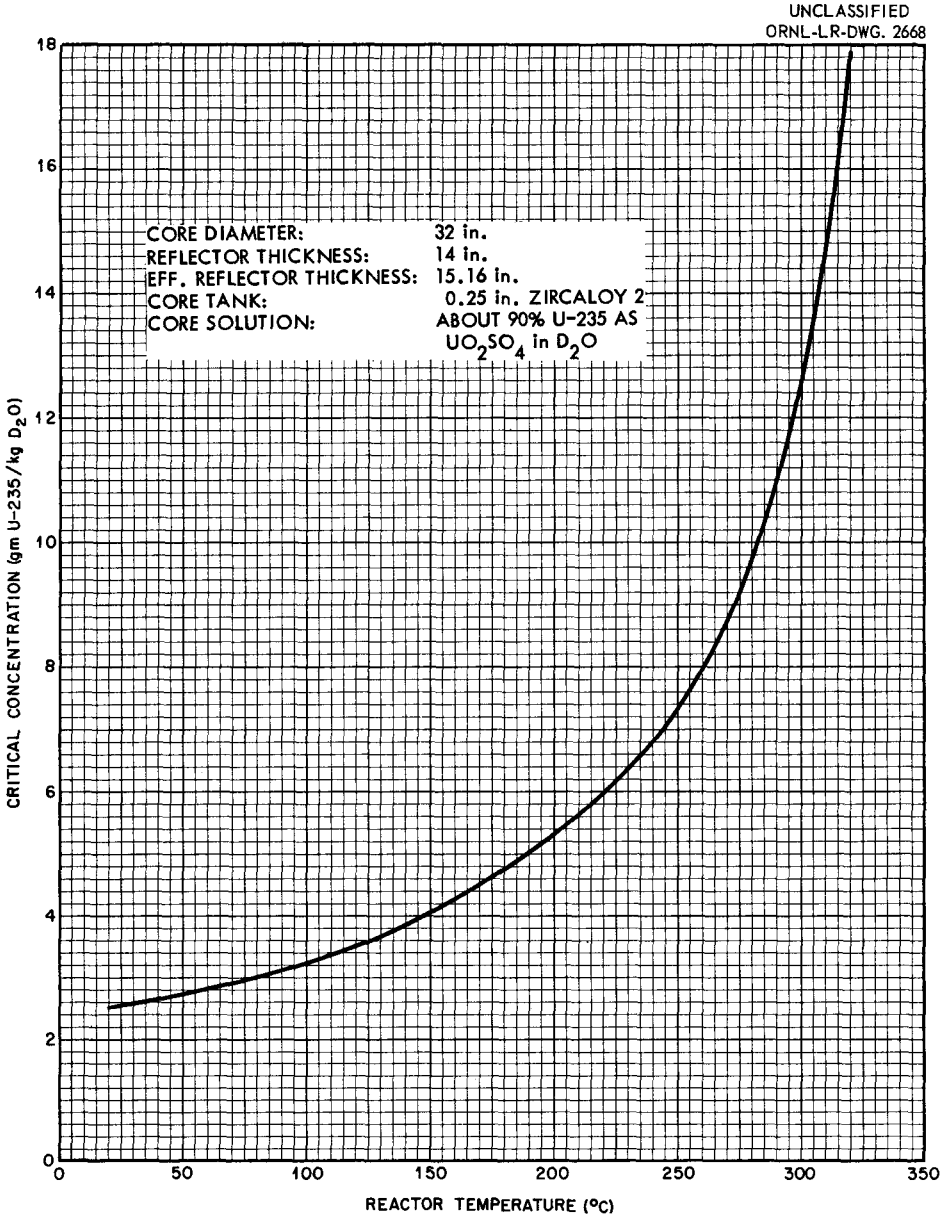

Fig. 6.2. Critical Concentration of U^{235} in Core of HRT with D_2O Reflector.

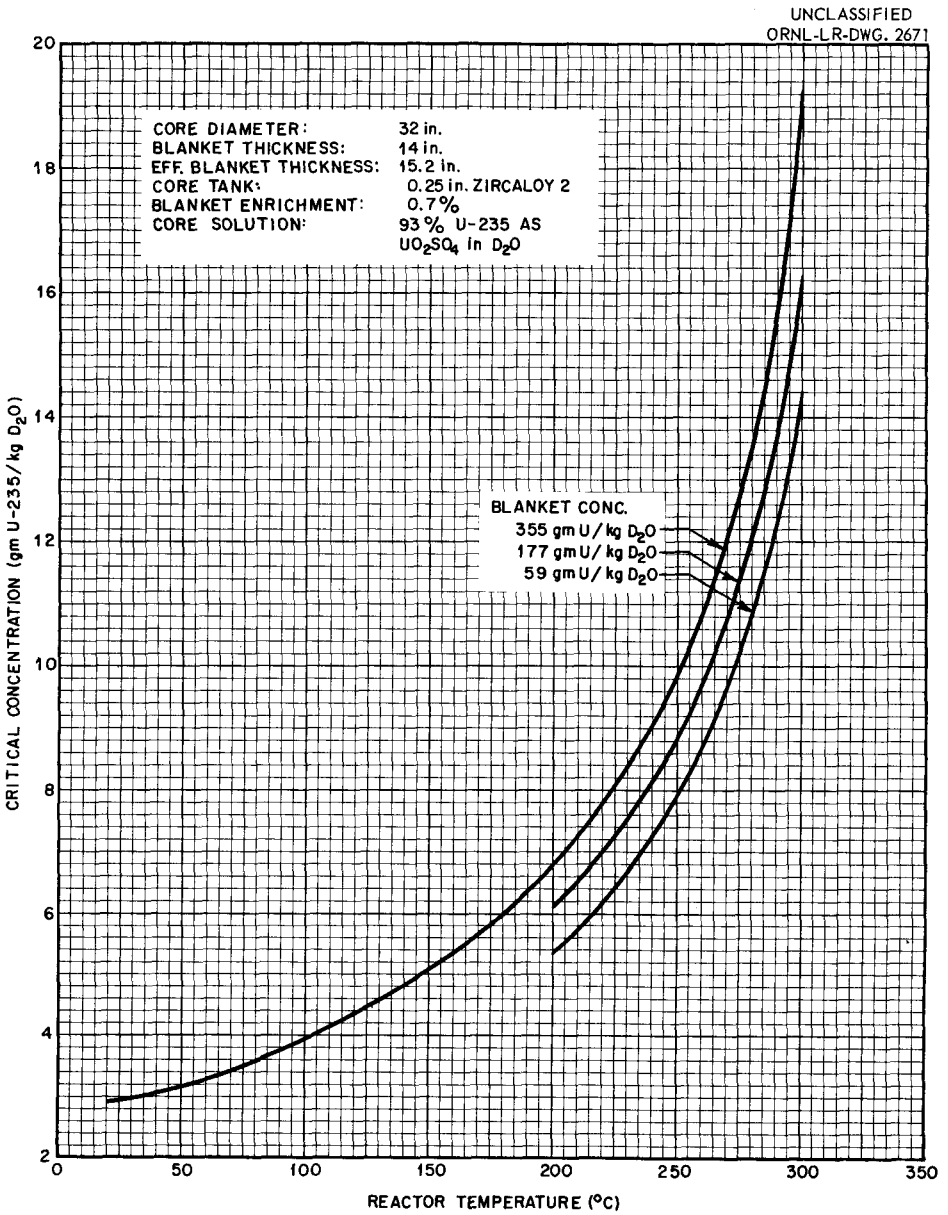

Fig. 6.3. Critical Concentration of U^{235} in Core of HRT with UO_2SO_4-D_2O Blanket.

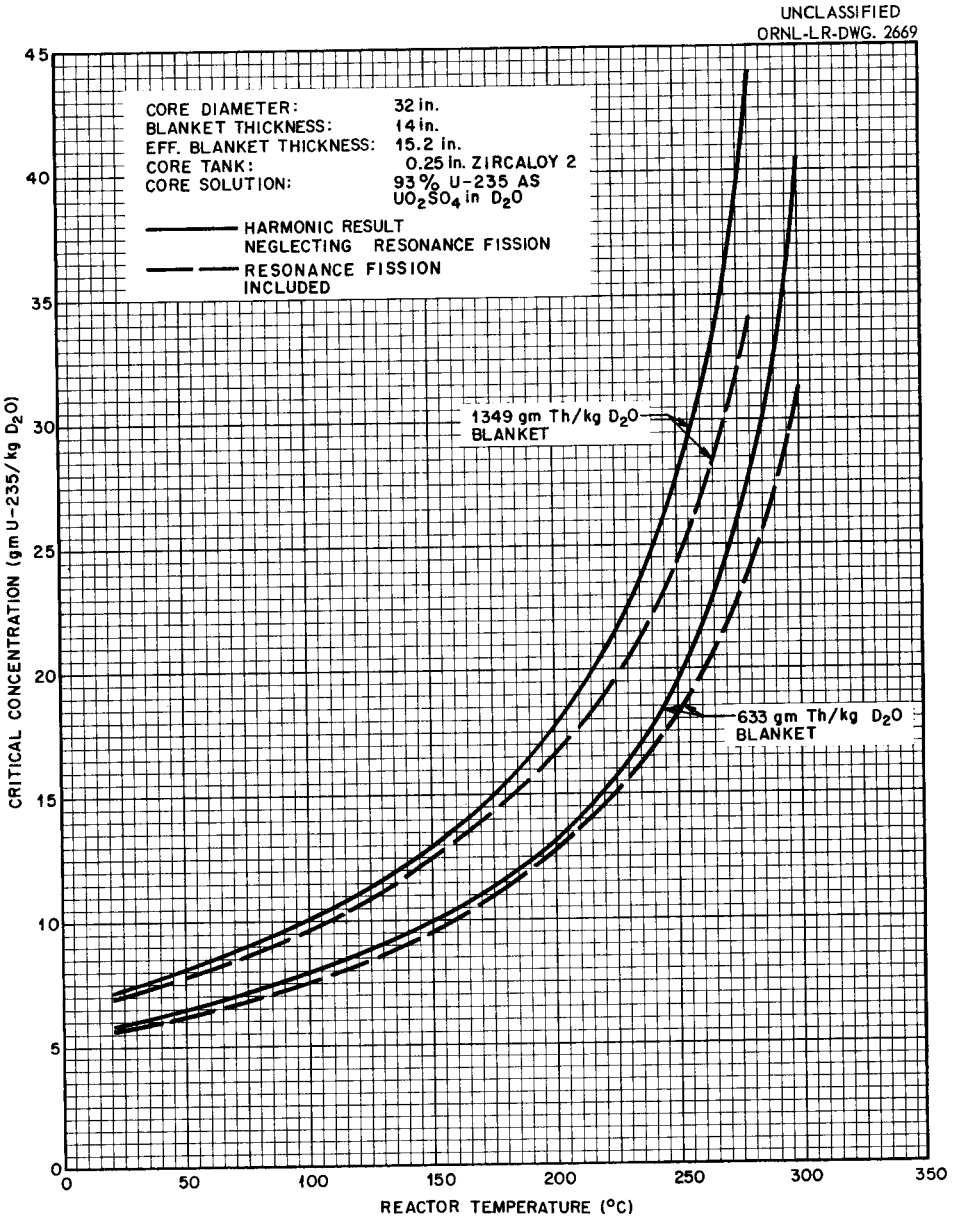

Fig. 6.4. Critical Concentration of U^{235} in Core of HRT with ThO_2-D_2O Slurry Blanket.

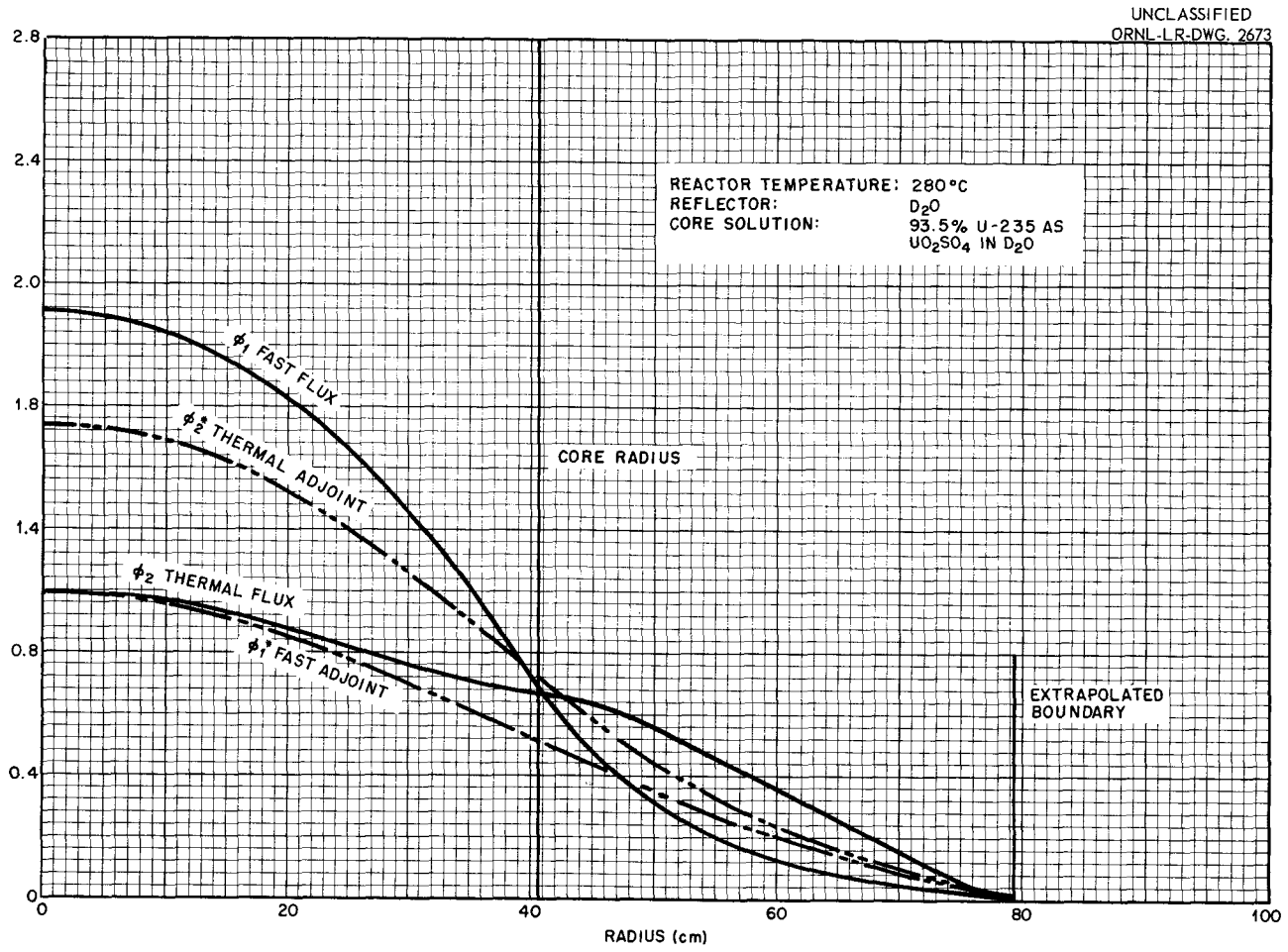

Fig. 6.5. Flux and Adjoint Functions in HRT with D_2O Reflector.

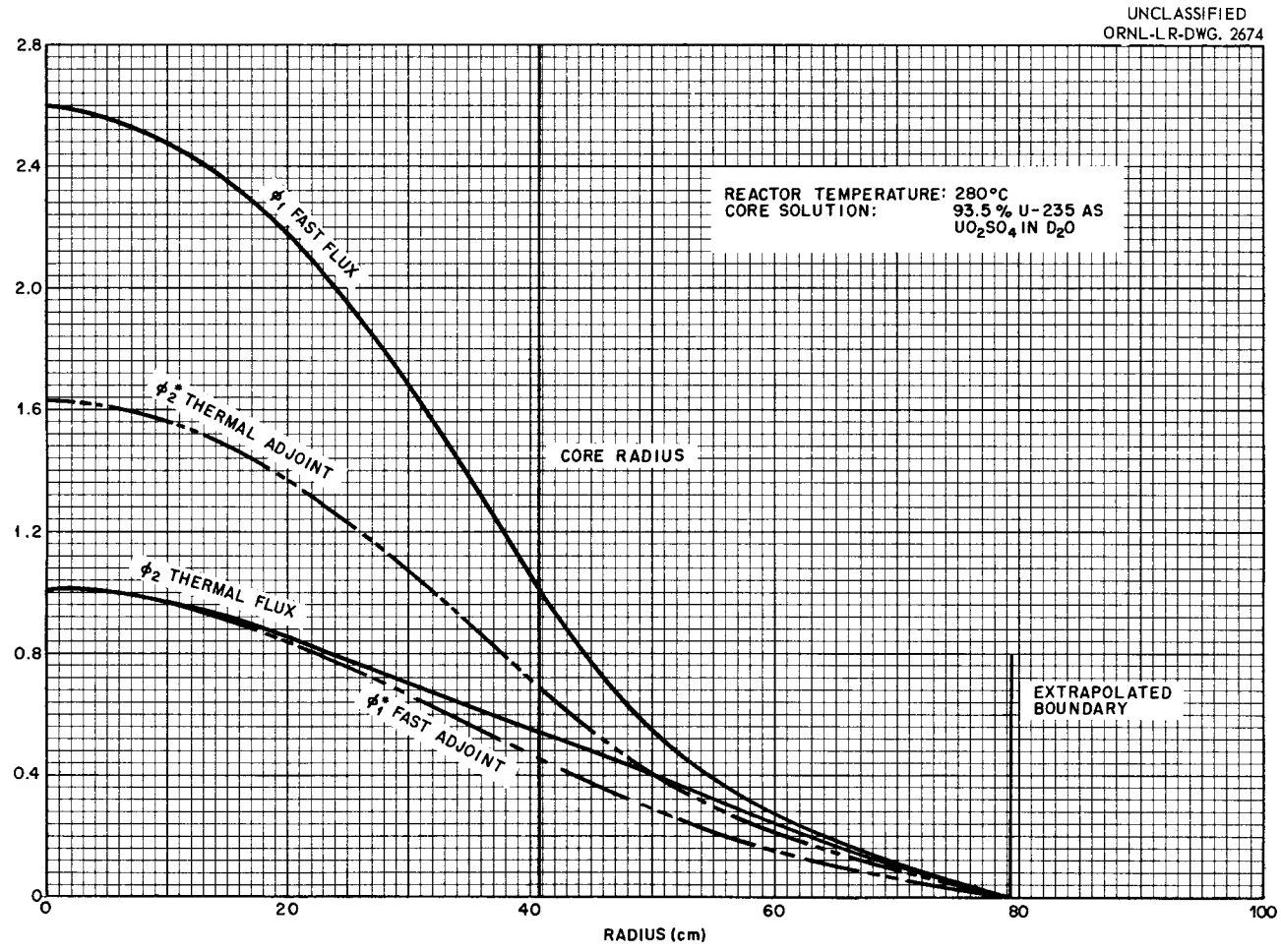

Fig. 6.6. Flux and Adjoint Functions in HRT with 355 g U/kg Natural UO_2SO_4-D_2O Blanket.

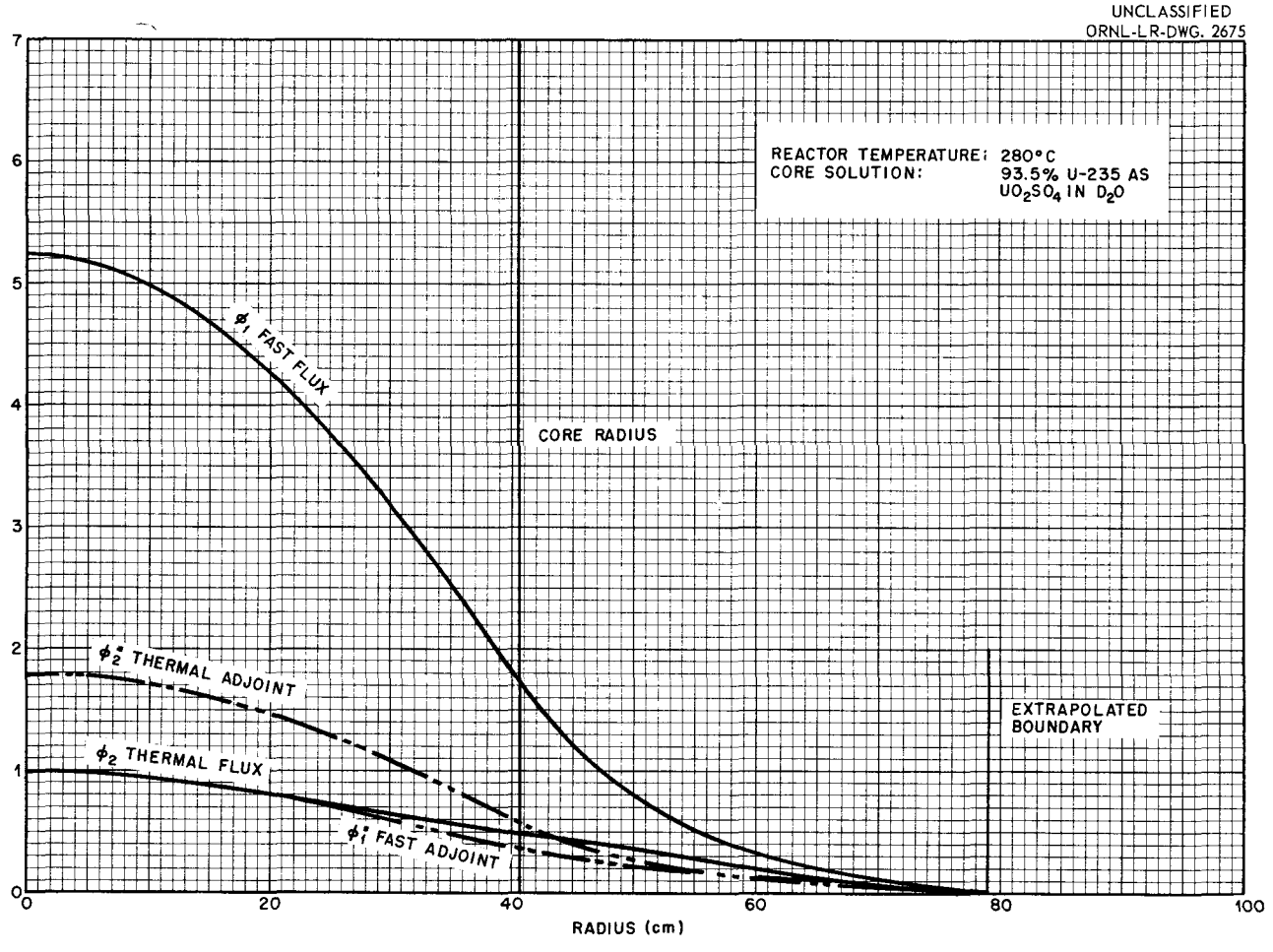

Fig. 6.7. Flux and Adjoint Functions in HRT with 633 g Th/kg D_2O ThO_2-D_2O Slurry Blanket.

Flux distributions and adjoint functions were computed for a number of cases.[23–25] Figures 6.5–6.7 give the results of ordinary two-group diffusion theory calculations for each mode of operation. Computed thermal flux values for 5-Mw core power are tabulated in Table 6.1. The flux distributions were used to compute the neutron leakage from the reactor as given in Table 6.2.[1]

The mean lifetime of prompt neutrons in the reactor were computed for a number of operating conditions by the so-called "hypothetical boron addition experiment";[1] the results are tabulated in Table 6.3.

The magnitude of the negative temperature coefficient of reactivity is important in determining the kinetic behavior of the reactor. One way of determining this quantity is to multiply the slope of the critical concentration vs temperature by the concentration coefficient of reactivity. Figure 6.8 presents the overall temperature coefficients obtained by this method. In obtaining these curves[1] use was made of the core concentration coefficient of reactivity shown in Fig. 6.9. Table 6.4 gives values for overall temperature coefficients at 280°C as well as coefficients for core temperature, blanket temperature, and non-uniform temperature changes, based on two-group perturbation theory and the flux distributions and adjoint functions shown in Figs. 6.5–6.7 (refs 26–27).

Criticality of long right circular cylinders was investigated in connection with the design of the fuel and blanket dump tanks.[28–30] Figure 6.10 shows the minimum linear concentration for criticality as a function of diameter and H_2O-D_2O content. The linear concentration is a convenient quantity because in a horizontal cylinder containing a given amount of uranium, the actual linear concentration is independent of the quantity of solvent. These results indicate that there is a diameter for which the linear concentration is a minimum. As the mole fraction of D_2O is increased, the minimum linear concentration decreases and occurs at larger diameters. Figure 6.11 shows similar plots for cadmium wrapped cylinders. The envelopes to the family of curves in each figure define the minimum critical linear concentration for all possible mixtures of H_2O and D_2O for completely filled cylinders; for partially filled cylinders the critical concentrations are greater.

Table 6.1. Thermal Neutron Flux at 5-Mw Core Power, 280°C

Blanket Composition	$\phi_{2c}(\max)^a$ (neutrons cm^{-2} sec^{-1})	$\bar{\phi}_{2c}$ (neutrons cm^{-2} sec^{-1})	$\bar{\phi}_{2R}$ (neutrons cm^{-2} sec^{-1})	$\phi_2(\text{wall})$ (neutrons cm^{-2} sec^{-1})
D_2O	1.07×10^{14}	8.17×10^{13}	3.82×10^{13}	7.25×10^{13}
ThO_2-D_2O slurry (630 g of Th per kg of D_2O)	4.62×10^{13}	2.89×10^{13}	9.05×10^{12}	2.26×10^{13}
UO_2SO_4-D_2O (350 g of natural U per kg of D_2O)	8.75×10^{13}	6.05×10^{13}	1.98×10^{13}	4.80×10^{13}

[a] $\phi_{2c}(\max)$ = maximum thermal neutron flux in the core,
$\bar{\phi}_{2c}$ = average thermal neutron flux in the core region,
$\bar{\phi}_{2R}$ = average thermal neutron flux in the blanket region,
$\phi_2(\text{wall})$ = thermal neutron flux at core tank.

Table 6.2. Neutron Leakage at 5-Mw Core Power, 280°C

Blanket Composition	Fast Leakage (neutrons/sec)	Thermal Leakage[a] (neutrons/sec)
D_2O	5.1×10^{16}	1.6×10^{17}
ThO_2-D_2O slurry (630 g of Th per kg of D_2O)	5.8×10^{16}	3.6×10^{16}
UO_2SO_4-D_2O (350 g of natural U per kg of D_2O)	1.1×10^{17}	8.5×10^{16}

[a]Evaluated at inside of pressure vessel; the thermal leakage is attenuated by a factor of approximately 87 by the pressure vessel.

Table 6.3. Prompt Neutron Mean Lifetimes in HRE-2 for Several Blanket Compositions

Life in sec $\times 10^{-4}$

Reactor Temperature (°C)	D_2O Reflector	Natural UO_2SO_4-D_2O, 350 g of U per kg of D_2O	ThO_2 Slurry 630 g of Th per kg of D_2O	ThO_2 Slurry 1350 g of Th per kg of D_2O
20	12.4	7.5	4.0	2.4
100	11.8	7.2	3.8	2.3
200	7.8	4.7	2.5	1.5
280	5.6	3.4	1.8	1.1
300	4.9	3.0	1.5	0.95

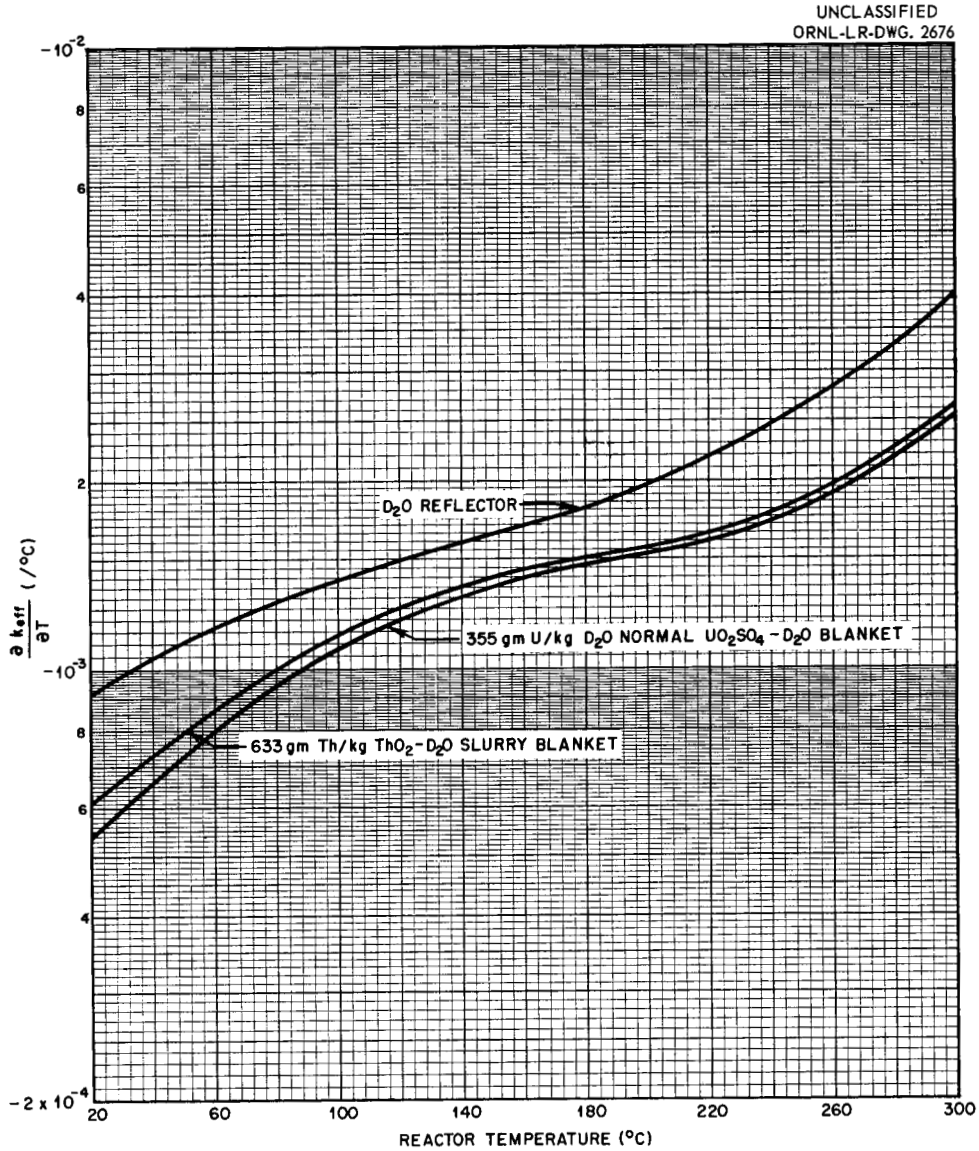

Fig. 6.8. Temperature Coefficient of Reactivity for HRT.

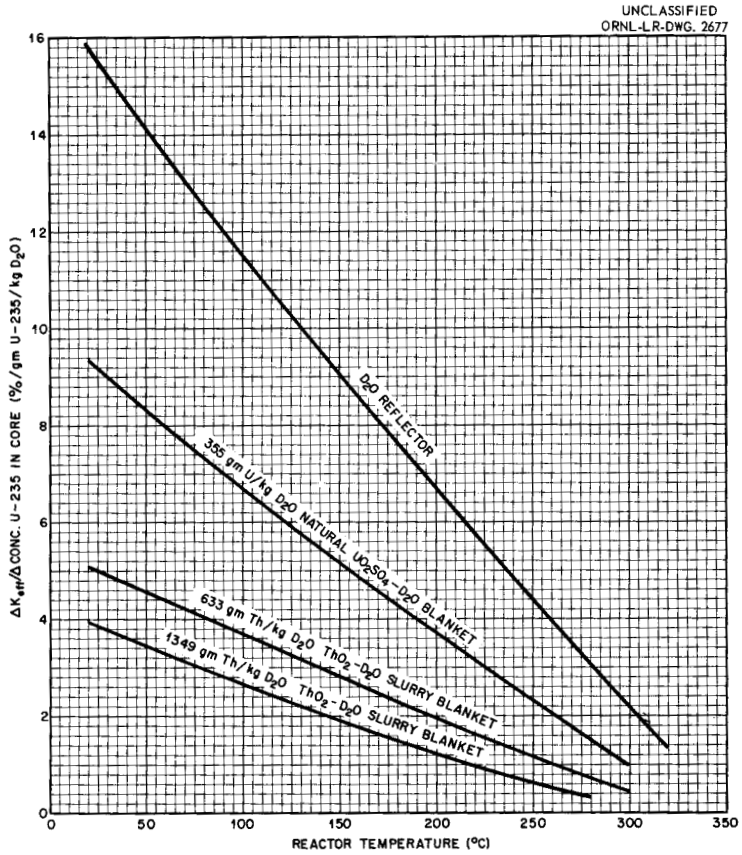

Fig. 6.9. Core Concentration Coefficient of Reactivity of HRT.

Table 6.4. Temperature Coefficient of Reactivity in HRE-2 at 280°C

		Blanket Composition	
	D_2O (°C^{-1})	UO_2SO_4-D_2O, 350 g of natural U per kg of D_2O (°C^{-1})	ThO_2-D_2O 630 g of Th per kg of D_2O (°C^{-1})
	$\times 10^{-3}$	$\times 10^{-3}$	$\times 10^{-3}$
$\frac{\partial K_{eff}}{\partial T_{uc}}$ [a]	−1.81	−1.71	−1.91
$\frac{\partial K_{eff}}{\partial T_{uB}}$	−1.07	−0.76	−0.32
$\frac{\partial K_{eff}}{\partial T_{u}}$	−2.88	−2.47	−2.23
$\frac{\partial K_{eff}}{\partial T_{\phi c}}$	−1.85	−1.85	−1.99

[a] ∂T_{uc} = uniform change in core temperature, blanket temperature constant;

∂T_{uB} = uniform change in blanket temperature, core temperature constant;

∂T_{u} = uniform change in both core and blanket temperature;

$\partial T_{\phi c}$ = nonuniform temperature change with shape of heat production, average core temperature used as measure of change.

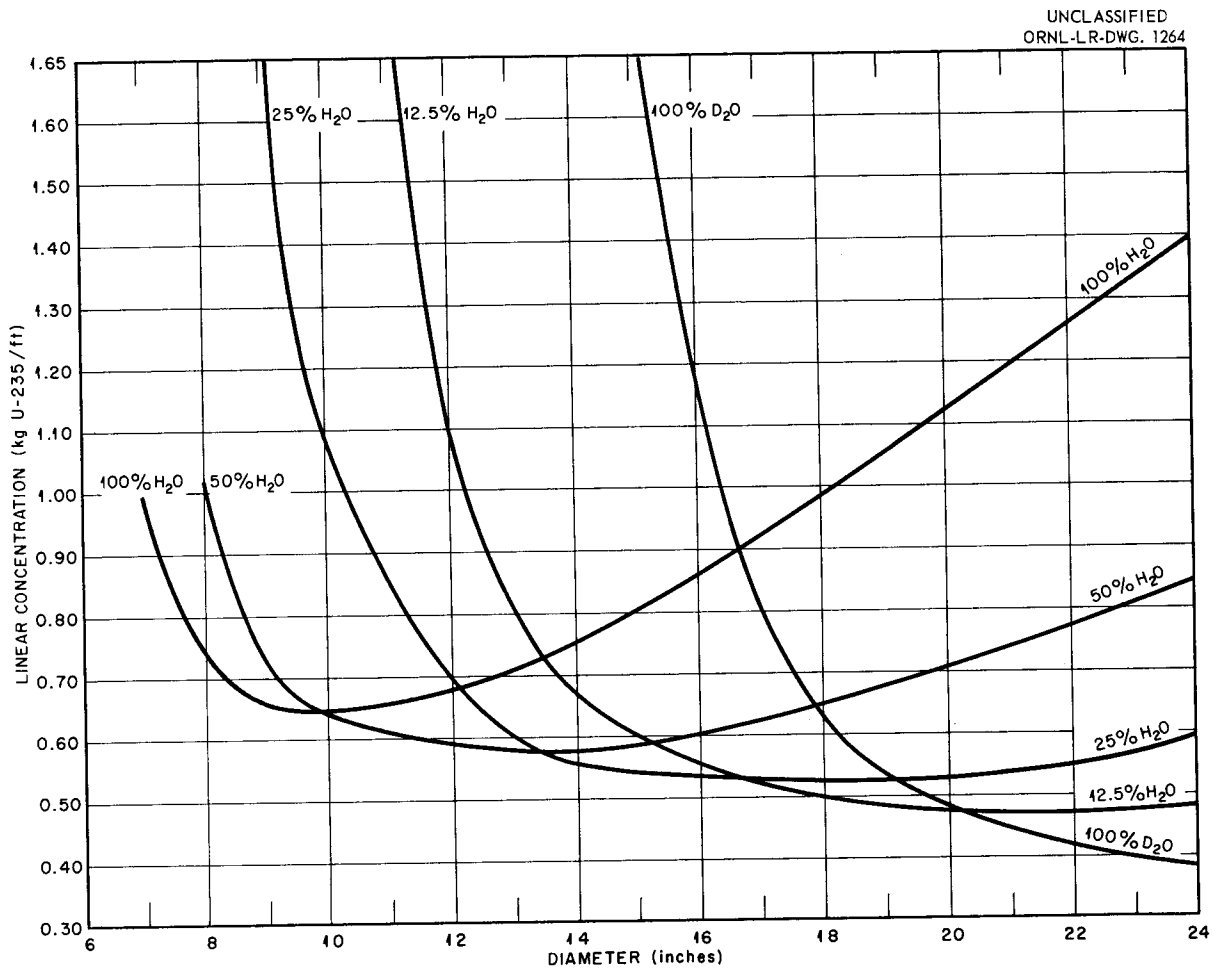

Fig. 6.10. Criticality of Circular Cylinders of Infinite Length, H_2O Reflected, 20°C.

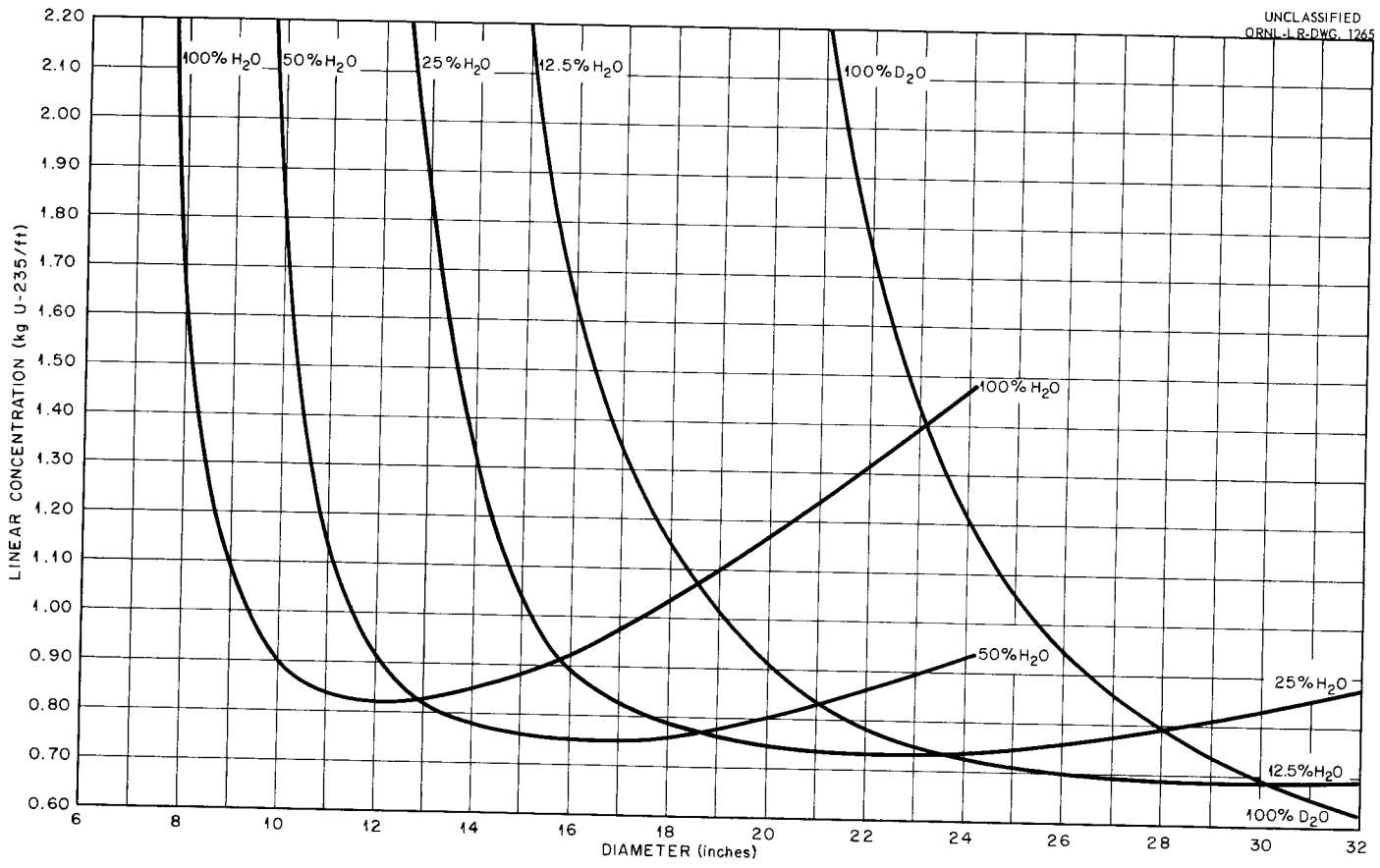

Fig. 6.11. Criticality of Circular Cylinders of Infinite Length, Cadmium Coated, H_2O Reflected, 20°C.

6.3 SAFETY

As identified in the introduction to this chapter, safety refers to the events which happen as a result of the initial power surge following a reactivity addition. The safety of any reactor is determined by the amount of reactivity which can be introduced into the reactor, the nuclear characteristics of the system, and the physical characteristics of the system. As one would expect the above quantities are inter-related and must be considered jointly. The results of the safety considerations of the HRE-2 have been reported.[2,3]

The amount of reactivity which can be added to a system is a function of the possible operational procedures allowed by the physical system, in combination with the pertinent nuclear and physical characteristics. Therefore to evaluate safety, it is necessary to consider all plausible combinations of reactor operation or mis-operation and their consequences, along with the probability for their occurrence.

The safety features associated with the rather large negative temperature coefficient of reactivity inherent in aqueous homogeneous reactors were exploited in the design of HRE-2. A prime example is the use of fuel concentration as the mechanism for reactor control. As a result control rods were not provided in HRE-2. Despite the inherent safety features situations can conceivably arise which will result in rupture of the thin Zircaloy-2 core tank. While this is certainly undesirable, it does not endanger personnel or the surrounding area in any way.

From the standpoint of preventing equipment damage, the maximum reactivity addition permitted in the design of the system was that value which would cause a 400-psi pressure *rise* in the core tank. This pressure increase was selected on the basis of experimental data which indicated that a pressure rise of 425 psi would be required to produce a stress in the core tank equal to the yield strength (approximately two-thirds the ultimate) at operating temperature.[31] From the standpoint of personnel protection and containment, the reactivity addition must be limited to that value which will cause a pressure rise of about 4000 psi in the pressure vessel. With these pressure limitations a number of situations were investigated to determine the maximum permissible reactivity addition.[2,3,32–43]

Reactivity can only be added to the reactor as a function of time, and the amount of reactivity present is determined by the rate of addition, the neutron power as it reaches prompt critical, and the nuclear characteristics of the core. It was possible to convert a linear rate of reactivity addition to an equivalent instantaneous reactivity addition on the basis of equal pressure rises.[2,3] Figure 6.12 shows the variation of peak pressure rise as a function equivalent prompt reactivity addition for a D_2O reflected reactor. As obtained from the figure, a 400-psi pressure rise corresponds to a value of m_e (prompt reactivity addition/neutron lifetime) of 24.5 sec^{-1}, while a 4000-psi pressure rise corresponds to an m_e of 52.5 sec^{-1}. These values of m_e represent instantaneous reactivity additions of 1.9 and 3.5%, respectively, based on a mean neutron lifetime of 5.7×10^{-4} sec and an effective delayed neutron fraction of 0.005.[3]

The lower the initial power level of the reactor, the lower the *permissible* rate of reactivity addition for a given pressure rise. This follows from the observation that it takes longer for the system to compensate for a given reactivity addition at low power levels than at high power levels. Since the effective rate addition will take place over a longer period of time for the lower initial power level case, its magnitude must change if the same amount of reactivity is to be introduced independent of initial power level. Thus, the power level associated with a neutron source should be considered in determining the permissible rate addition of reactivity. Figure 6.13 gives the relation between equivalent prompt reactivity and rate of reactivity addition, where the modified nuclear frequency includes the effect of power level. For a neutron source of 10^7 neutrons/sec, the modified nuclear frequency was estimated[3] to be 10^{-7} sec^{-2}. For an m_e of 24.5 sec^{-1}, the value of b, the rate of reactivity addition, is found from the figure to be 0.008 sec^{-1} ($l = 5.7 \times 10^{-4}$ sec^{-1}). Therefore, the maximum permissible rate of reactivity addition will be 0.8% Δk_e/sec, if the core pressure rise is not to exceed 400 psi and the reactor is initially at source power. In the same manner as outlined, the maximum permissible rate of reactivity addition is found to be 3.1% Δk_e/sec for a pressure rise of 4000 psi.[3]

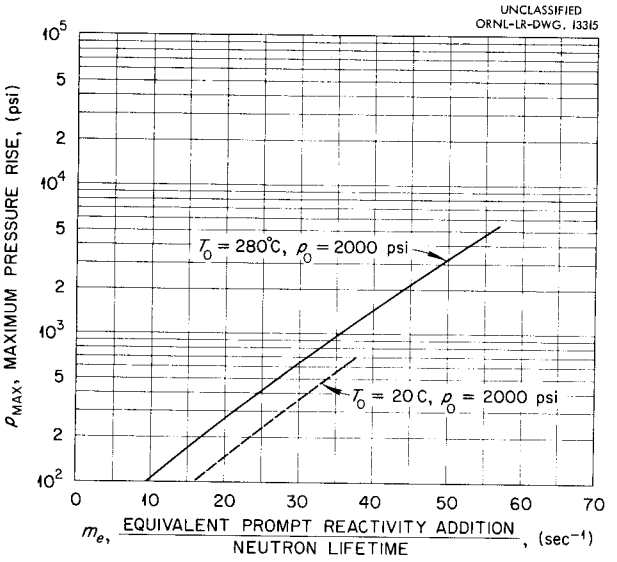

Fig. 6.12. Maximum Pressure Rise as a Function of m_e for the HRT with a D_2O Blanket.

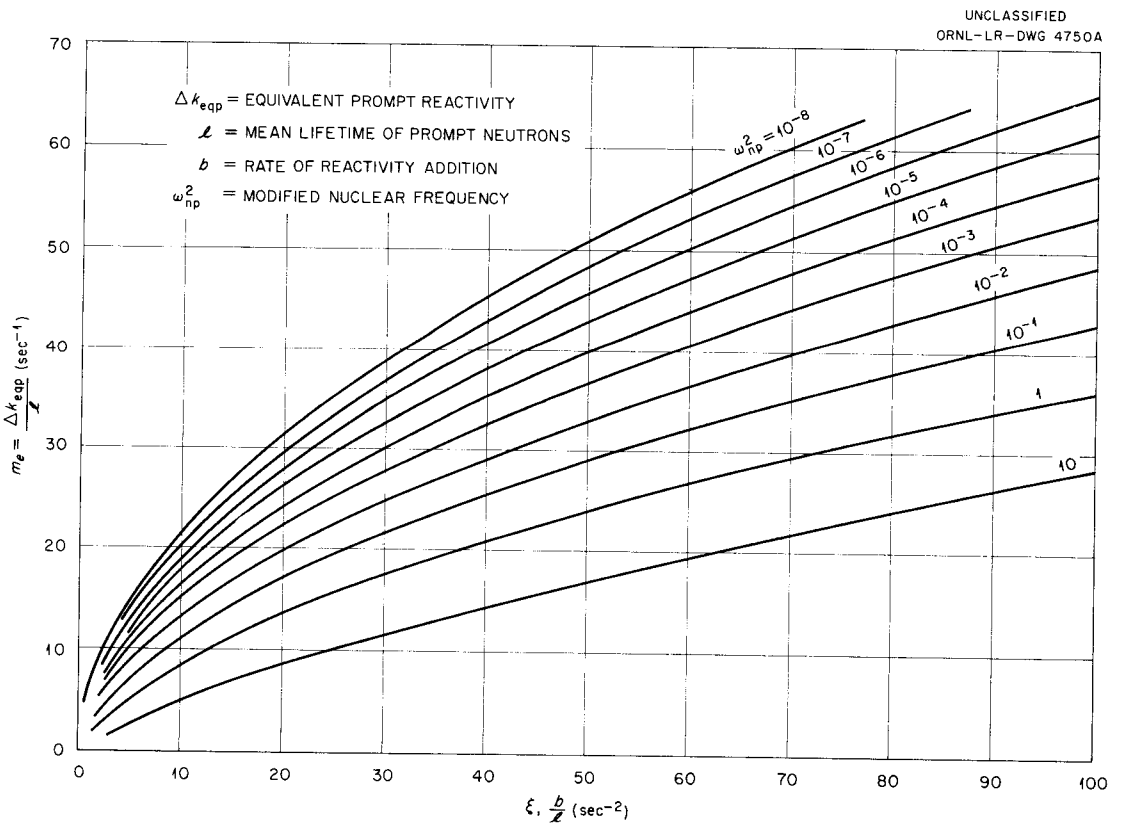

Fig. 6.13. Relation Between Equivalent Prompt Reactivity and Rate of Reactivity Addition.

There are many events which can add reactivity to the reactor; several cases were investigated for the D_2O reflected reactor.[2,3] It is believed that these cases represent the most hazardous ones and those which will endanger the reactor system. Since it is desirable to guard against rupture of the core tank, the permissible rate of reactivity addition is limited in most cases to 0.008 Δk_e/sec. In some cases the rate was limited to 0.005 Δk_e/sec, corresponding to a pressure rise of 300 psi when the reactor is initially at source power.

The order of presentation of the following postulated accidents is not intended to imply order of importance but only to identify the event being considered. The cases refer to operation with a D_2O blanket at design conditions unless otherwise specified. They are described in reasonable detail so as to convey the sequence of events which would have to occur for the reactivity addition to take place.

Case 1

By means of the high-pressure, auxiliary steam boiler, fresh fuel solution could be heated to about 280°C. The core fuel concentration could then be adjusted to correspond to criticality at approximately 250°C. If the circulating pump were now turned off and the shell side of the heat exchanger were vented to the steam condenser, the fuel solution in the heat exchanger would be cooled. Cooling of this fuel solution to 100°C appears to be possible in about a minute, in which time natural convection cooling would not lower the core temperature below 250°C. If the pump were now started at rated speed, cold fluid would be injected into the core region. The resultant lowering of the core fluid temperature would add reactivity at about 1.7% Δk_e/sec, based on first order perturbation theory.[26]

To lower the rate of reactivity addition to a tolerable value, the startup speed of the pump is reduced to one-third its rated value until the fluid in the high-pressure system has passed through the heat exchanger. This is accomplished by reversing the phase current and running the motor "backwards" for about 45 sec on startup. The phase current is then reversed and the pump runs in normal fashion. Decreasing the initial flow rate to one-third its normal value decreases the postulated rate of reactivity addition from 0.017 to about 0.006 Δk_e/sec.[2,3]

Case 2

With the reactor initially subcritical and the circulating pump running at normal speed, venting steam from the shell side of the core heat exchanger will lower the shell-side temperature and, as a consequence, lower the temperature of the fuel fluid. Since the core temperature coefficient of reactivity is about −0.002 Δk_e/°C at 280°C and since the permissible rate of reactivity addition is limited, the rate of temperature fall in the heat exchanger should also be limited.

The rate of temperature drop of the core fluid in the heat exchanger is closely approximated by the rate of decrease in temperature of the shell-side fluid.[40] Thus the permissible rate of temperature drop on the shell side of the heat exchanger should be limited to about 2.5°C per second, corresponding to a rate decrease in steam pressure of 35 psi/sec if the heat exchanger is operating under design conditions. At lower core temperatures the temperature coefficient is lower, but a given rate of pressure drop will result in a higher rate of temperature decrease. Considering all situations between atmospheric pressure and that corresponding to saturated conditions at 280°C, the permissible rate of pressure decrease should be limited to 20 psi/sec. If the shell pressure decreases at a higher rate, the circulating pump is stopped. Under normal flow conditions, about 2.7 sec is needed for fluid to travel from the heat exchanger outlet to the core inlet. Once the pump current is stopped, the flow rate drops rapidly (from 400 to 270 gpm in 0.5 sec, to 150 gpm in 1 sec, to 80 gpm in 1.5 sec, to 50 gpm in 2 sec, and to 40 gpm in 3 sec), so that a time delay in stopping the pump of about 1 sec appears sufficient.[2,3]

Case 3

At low temperatures not all the fuel in the system will be required for reactor ciriticality. If the fuel solution outside the core system were concentrated and then pumped into the reactor, reactivity may be added at an undesirable rate. The results of calculations indicate that, if the reactor were critical at 20°C and the fuel in the dump tanks were concentrated to about 320 g of U^{235} per liter, reactivity could be added to the reactor at a rate of 1.7% Δk_e/sec by pumping the concentrated fuel solution into the core with the feed pump.[29]

To eliminate the possibility of the above-described event, the fuel intake line from the dump tanks has been arranged so that 25 liters of solution will always be present in the dump tanks,[44] and the total U^{235} inventory has been limited to 5.0 kg. (During reactor operation the inventory limitation was increased.) Under these conditions the fuel concentration will be limited to about 160 g of U^{235} per liter, so that the maximum rate of reactivity addition will be less than 0.008 Δk_e/sec, even though the feed pump is running on high speed (6.3 kg of solution per minute).

If the reactor were initially critical at temperatures greater than 20°C, the critical mass would be greater, and less fuel would be in the dump tanks. At 280°C the possible rate of reactivity addition would be less than 0.002 Δk_e/sec.[2,3]

Case 4

With the fuel circulating pump off, the feed pump could pump concentrated fuel solution into the high-pressure system external to the core region. Startup of the circulating pump at this time could add reactivity at about 130% Δk_e/sec if fuel solution at 20°C containing 100 g of U^{235} per liter were in the external piping. This situation has been prevented by locating the feed line at the core outlet and by permitting fuel injection only when the circulating pump is operating. Thus the injected fuel will be diluted in the external system before entering the core. This case now reverts to case 3, so that the rate of reactivity addition will be limited to 0.008 Δk_e/sec.[2,3]

Case 5

During the initial filling of the reactor core, the reactor may become critical before the core vessel is filled if the fluid has a high fuel concentration.[32] Fortunately, under these conditions the sign of the temperature coefficient of reactivity appears to remain negative. Although of relatively small magnitude, the temperature coefficient, in combination with the low rate of reactivity addition associated with this event, is sufficient to maintain a safe condition. A more dangerous situation appears to exist for the case of a ThO_2 slurry blanket. Even for that case, however, the situation appears to be safe. The only danger would be in allowing the feed pump to continue pumping after criticality has been detected. Under these conditions reactivity would be added and the pressure would rise as energy is released. No difficulty should be encountered if the feed pump is stopped within about 1 min following the peak power surge. If the feed pump were not stopped, the pressure would rise slowly with time.[2,3]

Case 6

If the reactor were initially critical under design conditions, loss of pressure in the blanket could result in core-tank rupture, with a net addition of fuel into the reflector region. Such an event would result in a high rate of reactivity addition over a short time interval. However, the rupture disks between the core and blanket pressurizers would respond in such a manner so as to equalize the pressure between the core and blanket and not cause rupture of the core tank.

If it is assumed that corrosion had weakened the core tank, a small pressure differential between the core and blanket regions could cause core-tank rupture, with subsequent increase of fuel within the reactor. More reactivity would be added if the core pressure were originally higher than the blanket pressure. For this situation, there would be a net addition of core fuel fluid into the reactor following core-tank rupture.

The presence of the hot D_2O liquid (~40 liters) in the pressurizer would cause the core pressure to remain near 2000 psi for a relatively long time if leakage of fluid from the core system took place, and so any initial pressure differential would remain for an appreciable time interval. With only a 100-psi pressure differential between core and blanket, the volume of fluid in the line between the core and pressurizer (~18 liters) could be added to the reactor very rapidly. At the same time, the circulating pump would continue pumping fuel fluid into the core at about 30 liters/sec. Associated with the "instantaneous" fluid addition of 18 liters and the rate addition of 30 liters/sec would be a net reactivity addition of less than 2.7% Δk_e. Since core-tank rupture was assumed to take place, the maximum permissible reactivity addition would be that which would raise the vessel pressure by 4000 psi, and it would correspond to a permissible Δk_e of 3.5%. Thus it appears that the above occurrence would not cause pressure-vessel rupture.[2,3]

Case 7

If energy removal from the fuel fluid were less than that generated within it, the temperature of the core fluid would increase with time, and might cause two-phase separation of the solution. Also, the fluid might start to boil, which could cause an excessive increase in operating pressure and necessitate a dump. With regard to the latter situation, the important item would be to know within what time interval following shutdown a dump should be initiated.

Two-phase separation would probably occur if the fuel fluid temperature exceeded approximately 320°C and would first occur in the fuel leaving the reactor core. The heavy phase, as it formed, would tend to fall back into the reactor and to redissolve as it contacted cooler fluid. Such action would result in fuel stratification and would probably produce a smaller reactivity increase than if the fuel were uniformly distributed within the core.[43] Since the heavy phase preferentially extracts the fission products, the tendency would be to increase the operating temperature of the reactor, which would cause the reactor to become subcritical. A pessimistic viewpoint would be to assume that all the fuel pumped into the core remained uniformly distributed within the core region. The rate of reactivity addition corresponding to this situation would be 2.6% Δk_e/sec. Such a rate addition would not cause rupture of the pressure vessel, since the permissible rate was found to be 3% Δk_e/sec at source power. In the above situation the reactor power would be much higher than source power, so that the permissible rate of reactivity addition would be appreciably greater. If the initial power level were 5 Mw, a rate addition of 2.6% Δk_e/sec should not cause rupture of the core tank. No special precautions with regard to two-phase separation were therefore taken, since in no case did it appear that the pressure vessel was endangered; also, it appeared improbable that two-phase separation would cause reactor supercriticality, and even if supercriticality should occur, the core tank would not rupture if the reactor power were near 5 Mw initially.

If two-phase separation occurred and the circulating pump were not running, natural convective flow could cause accumulation of the heavy fuel phase at the bottom of the core tank. Although the reactor would be subcritical under these conditions, startup of the pump at this time could add reactivity at a very high rate. However, the above situation implies criticality before the pump stopped, and so the reactor will again attain a critical condition due to natural convective flow if two-phase separation has not occurred. Thus the stipulation was made that, for the above situation, the pump would not be started unless criticality were attained as a result of natural circulation of fluid.

If stoppage of core fluid flow occurred instantly, the temperature of the fuel solution would rise with time, as shown in Fig. 6.14, and could reach the boiling point.[45] However, natural-convection circulation would be initiated as soon as the temperature of the fluid within the core increased. Assuming that the flow was zero initially and that it increased as a result of natural-convection forces, the maximum average core temperature would be less than 305°C following operation at 5 Mw and less than 315°C at 10 Mw. For this case the heat exchanger was assumed to be operative. If the steam line from the heat exchanger were closed, the cooling capacity would be limited, and so the fuel fluid temperature would continue to rise with increasing time. However, the rate of rise would be slow and boiling of the core fluid would not take place until about 10 min after the steam line was closed (10 Mw initially). Therefore it would not be necessary to have rapid-response instruments to control the above situation. However, as the fluid expanded, solution would be ejected into the pressurizer volume and would compress the vapor in that volume. If the vapor compressed adiabatically, an increase of 20°C in the core fluid temperature would cause the pressurizer pressure to rise from 2000 to 2800 psi. With the reactor initially at 5 Mw, this could occur in about 40 sec if there were no letdown of fluid from the high-pressure system.[46,47] The reactor is protected against above-normal operating pressures by means of a pressure signal which initiates a dump whenever the pressure exceeds 2800 psi.[48] Under normal conditions the letdown valve would release fluid from the high-pressure system, which would prevent the pressure from reaching 2800 psi under the above circumstance. Thus, with regard to pressure rise, it appears that a dump need not be initiated for at least 10 min following stoppage of energy removal, and possibly not at all.[2,3,49–51]

The above safety considerations were primarily concerned with operation of the reactor with a D_2O reflector. The effects of other blanket materials were also investigated in detail, assuming the physical design of the reactor to be the same for all cases.[2,3,38] As indicated in Tables 6.3 and 6.4 the essential effect of changing blanket materials is to change the average lifetime of prompt neutrons, while the temperature coefficient of reactivity remains relatively insensitive to the change.

Calculations were performed to determine the peak pressure rise as a function of reactivity addition for the computed neutron lifetimes at 280°C; the results are shown in Fig, 6.15. The value of m_e, the ratio of equivalent prompt reactivity addition to prompt neutron lifetime, is a known function of initial reactor conditions and the rate of reactivity addition. Therefore, the results of Fig. 6.15 can be used to relate a specified pressure increase to the permissible rate of reactivity addition for an initial power level. Figure 6.16 summarizes the relations obtained between rate of reactivity addition and neutron lifetime for a specified pressure rise and initial power level. In the figure, $k_e(0)$ is the initial value for the effective multiplication constant, and P_0 is the initial neutron power level. As can be seen in the figure for a specified initial power level and pressure rise, the associated rate of reactivity addition is relatively independent of neutron lifetime, and hence, blanket material. A summary of the maximum allowable rates of reactivity addition and maximum allowable instantaneous reactivity additions are given in Table 6.5. These results are based on initial reactor conditions of 2000 psi, 280°C, and a source power level of 10^7 neutrons/sec.[3]

6.4 STABILITY

Stability of the HRE-2 reactor system was investigated to determine whether the reactor power would return to a stable condition following a system disturbance.[2,52–54] The investigation was divided into three separate parts, identified as nuclear, load demand, and physical stability. Each was studied and found to be stable under design conditions as determined by the linearized equations of motion.[52,55]

The nuclear stability studies were concerned with high-frequency nuclear power oscillations, and the effects that nuclear and physical design parameters have upon power-time behavior. These

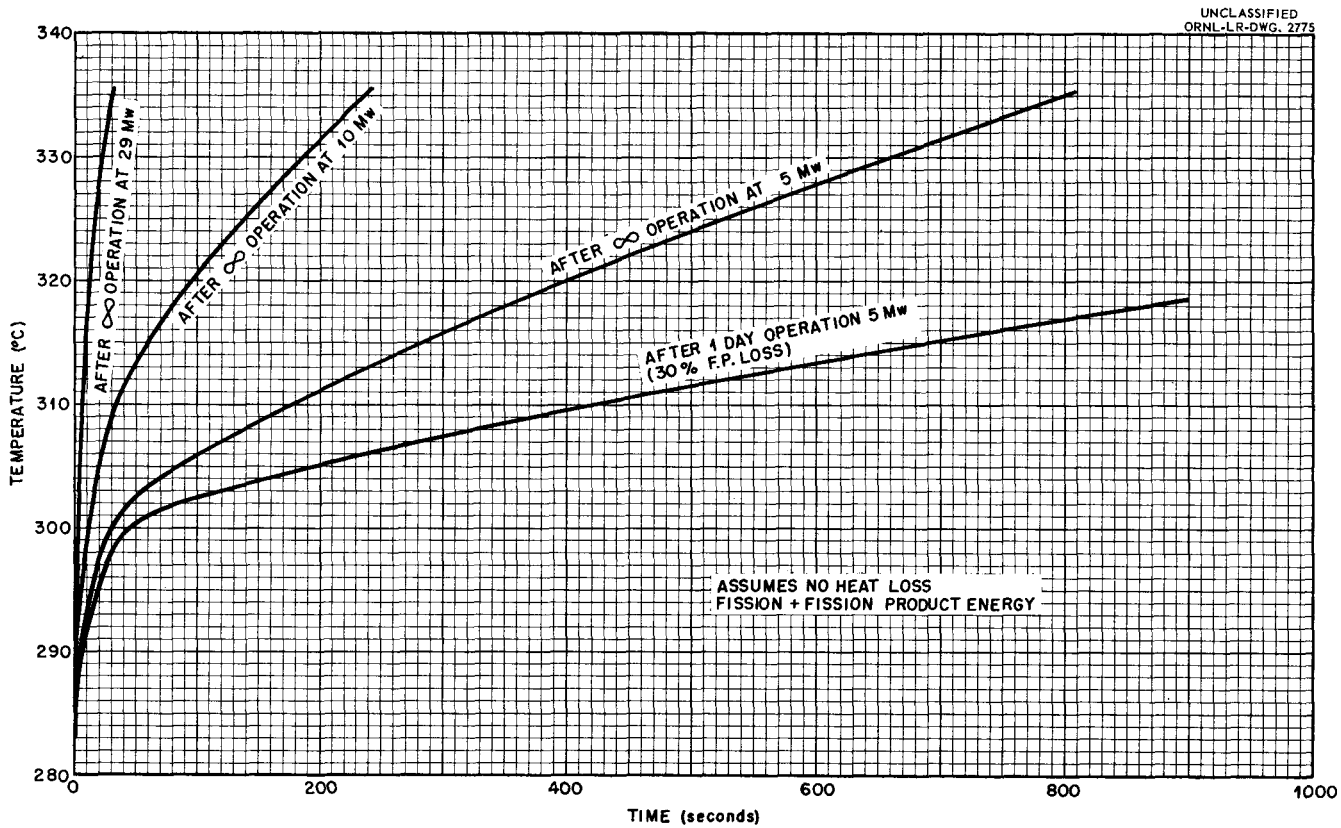

Fig. 6.14. Temperature of Fuel in HRT Core vs Time After Fuel Circulation Stops.

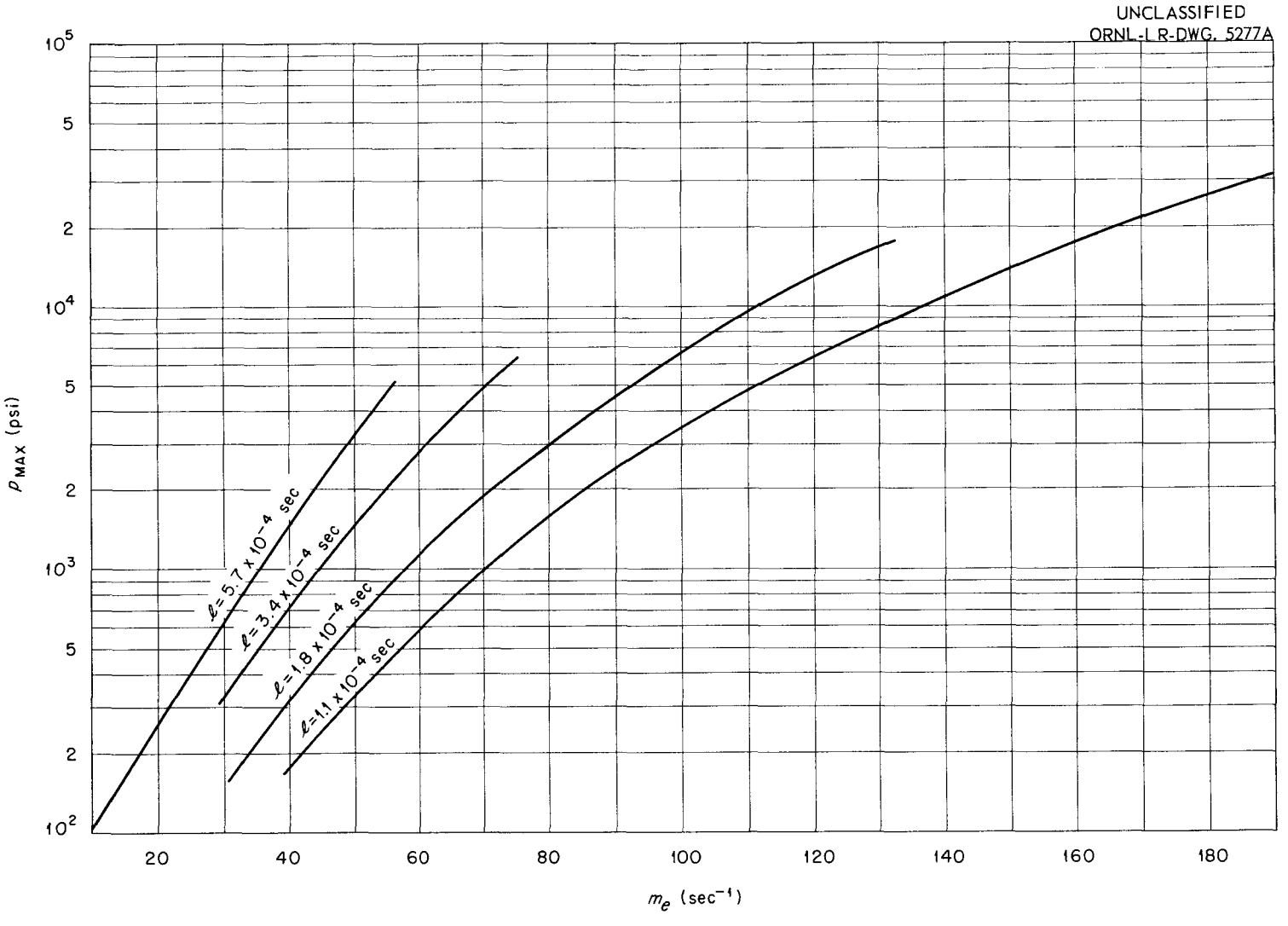

Fig. 6.15. HRT Core Pressure Rise vs Reactivity Addition for Various Prompt-Neutron Lifetimes.

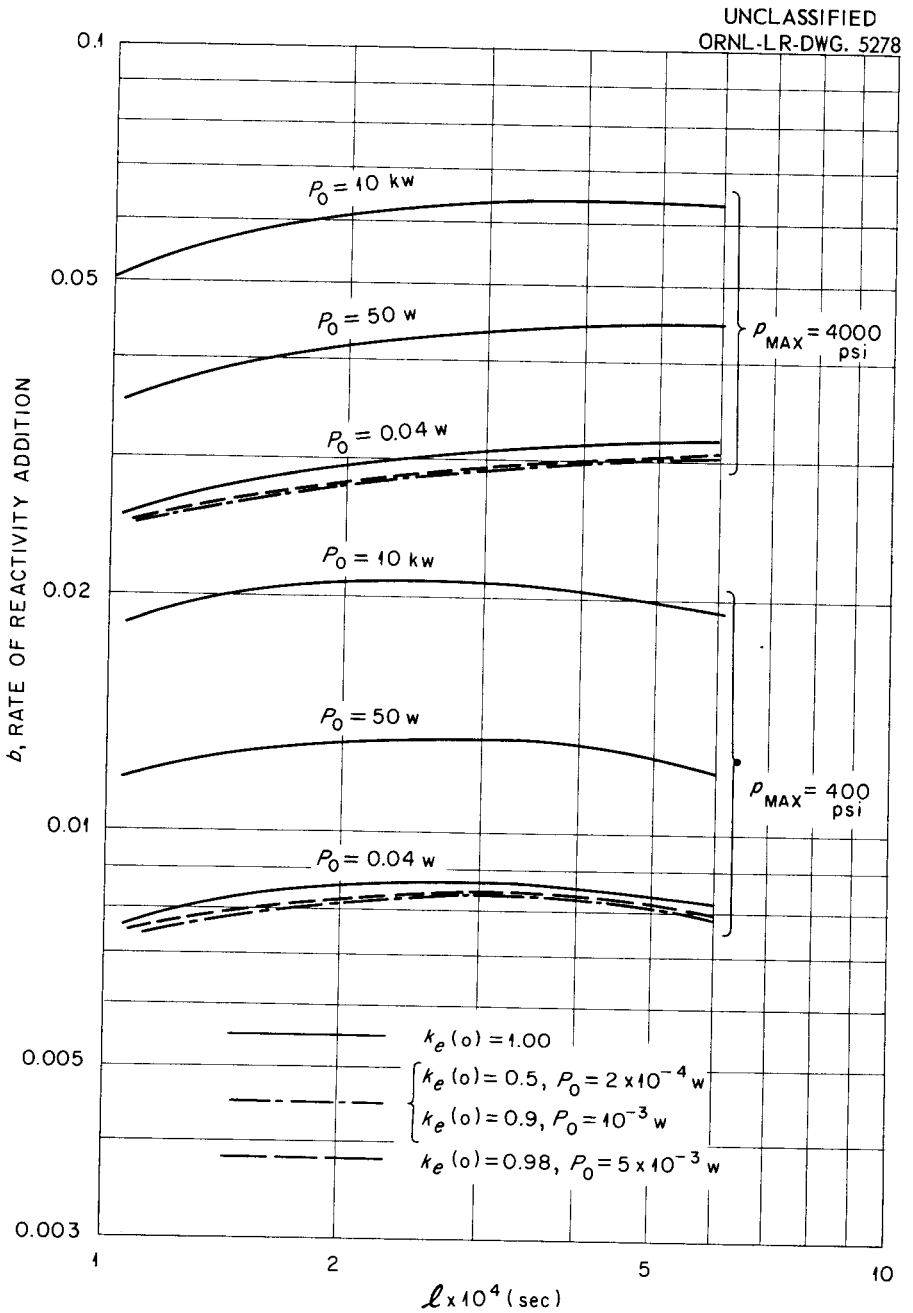

Fig. 6.16. Rate of Reactivity Addition as a Function of Lifetime of Prompt Neutrons and Initial Power Conditions.

Table 6.5. Summary of HRE-2 Safety Calculations for Source Power Conditions

Variable	Blanket Material			
	D_2O	UO_2SO_4-D_2O[a]	ThO_2-D_2O[b]	ThO_2D_2O[c]
Prompt-neutron lifetime, sec $\times 10^4$	5.7	3.4	1.8	1.1
Rate of reactivity addition required to increase core pressure by 400 psi, % Δk_e/sec	0.80	0.84	0.80	0.75
Instantaneous reactivity addition required to increase core pressure by 400 psi, % Δk_e	1.9	1.6	1.3	1.1
Rate of reactivity addition required to increase reactor pressure by 4000 psi, % Δk_e/sec	3.0	3.0	2.8	2.6
Instantaneous reactivity addition required to increase reactor pressure by 4000 psi, % Δk_e	3.5	2.8	2.0	1.6

[a] 330 g of natural uranium per kg of D_2O.
[b] 630 g of thorium per kg of D_2O.
[c] 1350 g of thorium per kg of D_2O.

studies considered only the high-pressure system. Since changes in power demand would initiate only low-frequency nuclear power oscillations in comparison to those sustained by the nuclear-physical system, it was assumed that power demand was constant. A similar argument justified omission of the low-pressure system. The load demand stability studies were concerned with frequencies intermediate between those associated with the high- and low-pressure system. These studies assumed the fuel solution to be incompressible and neglected the low-pressure system, while allowing the power demand to vary in order to determine whether load demand changes would lead to instability. The physical stability studies were concerned with low-frequency power oscillations associated with the low-pressure system and the power demand system. These studies assumed the fuel solution to be incompressible and that the power demand varied linearly with fuel temperature, and established whether physical operations associated with transfer of fuel solution between the high- and low-pressure systems would lead to a permanent change in the operating power level.

Typical results of the nuclear stability studies are shown as a family of parametric curves in Fig. 6.17 for the D_2O reflected reactor and in Fig. 6.18 for the slurry blanketed reactor. It can be shown that the reactor is stable if the operating point is above and to the left of the appropriate curve.[2,52] An interpretation of the symbols used in the figures is given in Table 6.6.

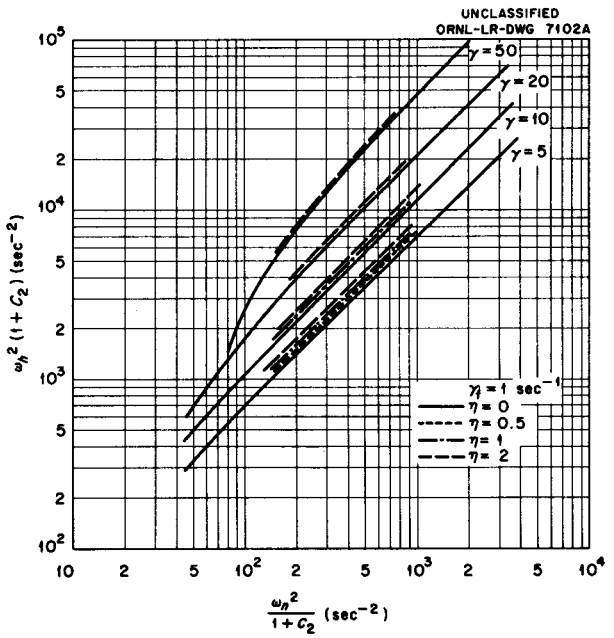

Fig. 6.17. Stability Criteria for Homogeneous Circulating Reactors.

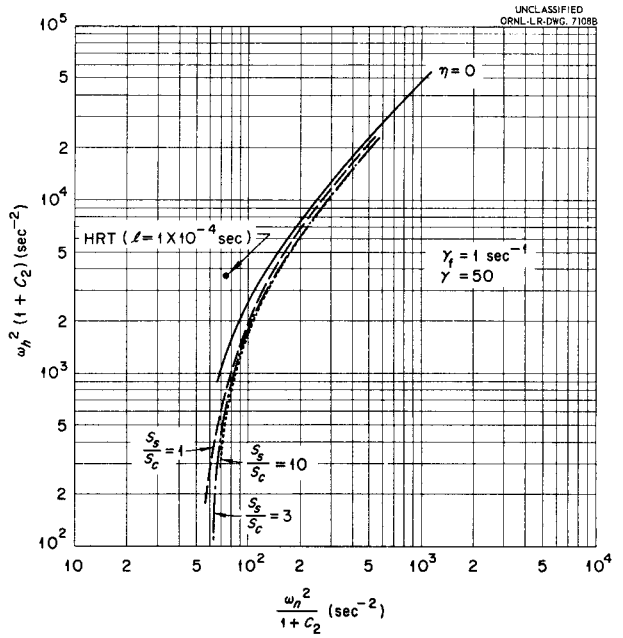

Fig. 6.18. Stability Criteria for Homogeneous Circulating Reactors.

Table 6.6. Interpretation of Symbols Used to Describe Nuclear Stability

Symbol	Interpretation
ω_n^2	Square of nuclear frequency, sec^{-2}
ω_h^2	Square of hydraulic frequency, sec^{-2}
γ	Ratio of effective fraction of delayed neutrons to mean lifetime of prompt neutrons, sec^{-1}
γ_f	Normalized friction coefficient in core-exit line, sec^{-1}
η	Twice the reciprocal of the average residence time of a fluid particle in the core, sec^{-1}
C_2	Measure of the effect of pressurizer volume upon core pressure rise, dimensionless
S_c	Volume heat capacity of core fluid, kw · sec/°C
S_s	Volume heat capacity of water on shell side of heat exchanger, kw · sec/°C

The two extremes for nuclear stability of HRE-2 are associated with a D_2O reflector and a 1350 g of Th per kg of D_2O blanket. For the D_2O blanket, $\gamma = 10$ sec^{-1}, $\gamma_f = 1$ sec^{-1}, $\eta = 0.18$ sec^{-1}, $\omega_b^2 (1 + C_2) = 3700$ sec^{-2}, and $\omega_n^2 (1+ C_2)^{-1} = 22$ sec^{-1} at 5 Mw. Since this operating point lies above the appropriate curve in Fig. 6.17 ($\gamma = 10$, $\eta = 0$), it is concluded that the reactor will be operating in a stable region. The maximum value $\omega_n^2 (1 + C_2)^{-1}$ could have and still maintain reactor stability is about 330 sec^{-2}, corresponding to operation at 75 Mw.[2]

For the heavy slurry blanket (1350 g of Th per kg of D_2O), $\gamma = 50$ sec^{-1}, $\gamma_f = 1$ sec^{-1}, $\eta = 0$ sec, $\omega_b^2 (1 + C_2) = 3700$ sec^{-2}, and $\omega_n^2 (1+ C_2)^{-1} = 75$ sec at 5 Mw. This operating point lies to the left of the stability curves as indicated in Fig. 6.18. With $S_s/S_c = 3$, stable operation is indicated up to core power levels of about 9 Mw. Similarly, stable operation is indicated up to about 18 Mw for the light slurry blanket (630 g of Th per kg of D_2O) and about 38 Mw for the natural uranium blanket.[2]

In evaluating the load demand stability of the reactor system, the generalized equations of motion are written and transformed into a single characteristic algebraic equation which must have no positive real roots if the system is to be stable. It has been shown mathematically that this condition is met and that the system is stable to power demand changes under the specified conditions.[2]

Physical stability is concerned with the effect of low-pressure fuel system operations on power demand. While operating HRE-1 it was observed that temperature and power level of the reactor would slowly increase with time under certain operating conditions.[56] This effect, termed the "walk-away" phenomenon, was associated with a slow rate of reactivity addition caused by an increase in fuel concentration. The increase in fuel concentration resulted from water being removed from the core (by formation of decomposition gases and accompanying vaporization of water) at a faster rate than it was being returned from the low-pressure system. This phenomenon, being a function of temperature, power level, and transfer rates between the high- and low-pressure systems, could be controlled by the operator.

The HRE-2 was analyzed for stability against this phenomenon by use of the applicable linearized equations of motion.[53,54] It was found that the reactor system would be stable under design conditions. The studies also showed that a number of design parameters, such as operating conditions, transfer rates, holdup volumes, etc., can be adjusted to increase the stability.

Since the transfer rates are a function of the quantity of decomposition gases let down to the low-pressure system for recombination, stability against "walk-away" is, as would be expected, a function of internal catalyst concentration in the fuel solution. Calculations indicated the reactor would be stable against "walk-away" at average core temperatures below 290°C and 270°C at 5- and 10-Mw power levels, respectively, if sufficient copper is added to the solution to recombine all the decomposition gases produced in excess of those corresponding to operation at 1 Mw. Adding sufficient copper to recombine all the gases produced at these two power levels, the limiting temperatures are raised to 295 and 278°C respectively. If enough copper is added so that decomposition gases are never produced, then the reactor will be stable under all conditions according to the model used in the calculations.[53,54]

6.5 HAZARDS

In evaluating the hazards involved in the operation of a reactor, it is necessary to consider in detail all phases of the system, including such items as component design, system design, the effects of normal and abnormal operation on nuclear safety and stability, natural disasters, etc. The overriding consideration in the evaluation of the potential hazards is that the operating personnel and the public are not subjected to unreasonable risks. In preparing a summary report to the USAEC Advisory Committee on Reactor Safeguards, all aspects of the reactor system and its operation were examined in detail.[4,5,57] It was concluded that the probability of excessive

amounts of radioactivity escaping to the atmosphere is quite small and that the dangers to operating personnel and to the public compare favorably with normally accepted risks. A Review Committee examined the design of the reactor and found that is conformed to accepted standards for reactor construction.[41,42,58,59]

The most serious concern to the surrounding area is the release to the atmosphere of a large fraction of the radioactive material contained within the reactor system. The design and construction of the reactor and shield make this a very unlikely event. However, the consequences were considered for such a release by: (1) the discharge of a cloud of gas and particulates; and (2) the discharge of the reactor solutions to the watershed. With such a release, the chief radiological hazard arises from the ingestion and inhalation of some thirty-odd fission products selected on the basis of half-life, fission yield, and potential biological damage. The maximum permissible concentration or permissible intake values are determined on the basis of limiting the internal dose to any organ to a maximum of 25 rep during the time the isotopes remain in the body.

The extent and severity of hazard from the contamination of the public water downstream from the reactor site was evaluated. It was assumed that all the activity corresponding to 82 days of reactor operation at 10 Mw is released in water onto the ground surface, and by heavy rainfall and surface run-off, all the activity is flushed without loss down the valley and mixes with the concurrent Clinch River flow over a 6-hr period. On the basis of the most pessimistic choices of river flow conditions and assuming no losses by sorption in the soil, absorption and settling in the river and reservoirs, and removal in water treatment plants, the estimated peak concentration in the water relative to the emergency maximum permissible concentration and the time required for the peak concentration to reach the point are given in Table 6.7 for a few populated areas downstream from the reactor site.[4]

In the absence of excessive rainfall, the material will be delayed in reaching the Clinch River, thus giving greater dilution. Also the release of extra water in the river (controlled by TVA at Norris Dam) for additional dilution would tend to reduce the hazard. It was concluded that the length of time available for remedial action on behalf of the downstream consumers would make a proper warning system and an emergency water supply effective in preventing casualties following such a release.

In estimating the hazard from airborne activity, it was assumed that the reactor system, initially at 300°C and 2000 psi, ruptures and at the same time the containment vessel seal sheets are rendered ineffective. It is estimated that about one third of the reactor solutions will vaporize in the process of expanding into the cell volume. An additional postulate is that one half of the radioactive material will become airborne particles which will not readily settle. Two situations were investigated: (1) the airborne activity is released from the reactor building in the form of a hot cloud, having about 2×10^6 Btu of thermal energy, which will rise hundreds of meters into the atmosphere and be dispersed; and (2) the airborne activity is released from the building in the form of a cold cloud, having had its thermal energy removed in some manner while in the building.

Table 6.7. Estimated Hazard from Water Contamination

Location	Distance Downstream (river miles)	Travel Time (days)	Ratio of Concentration to Maximum Permissible Emergency Concentration	
			(1-day intake)	(30-day intake)
ORGDP	7.6	3.25	42.0	586
Kingston	20.8	9.5	10.5	169
Watts Bar	58.6	17.0	0.044	0.79
Chattanooga	123	25.5	0.0008	0.17

The total integrated exposure from a hot cloud, which is the most probable form for the release, is shown in Fig. 6.19 as a function of distance from the site. No hazard exists for a hot cloud release during the daytime; the maximum exposure to the fission product isotopes is only 60% of the emergency MPE. For a night release, the hazard arises solely from the ingestion of fission products with the exposure exceeding the emergency MPE at distances between 3.4 and 90 miles. However, the maximum exposure exceeds the emergency MPE by a factor of less than 5.

The exposure from a cold cloud release is shown as a function of distance from the reactor site in Fig. 6.20. Also shown in the figure is the effect of releasing the cold cloud from the building through the off-gas stack; this provides a "skip distance" to the cloud so that the exposure is considerably decreased at distances up to 2 miles at night and 0.2 miles during the day. The emergency MPE for the fission product isotopes is exceeded for all distances less than 9 miles for a daytime release and 85 miles for a night release. It can be shown from considerations of the duration of stable conditions that the estimated hazard for a night release of a cold cloud is unrealistic.[4] From these and other considerations, it was concluded that the hazards involved compare favorably with normally accepted risks.

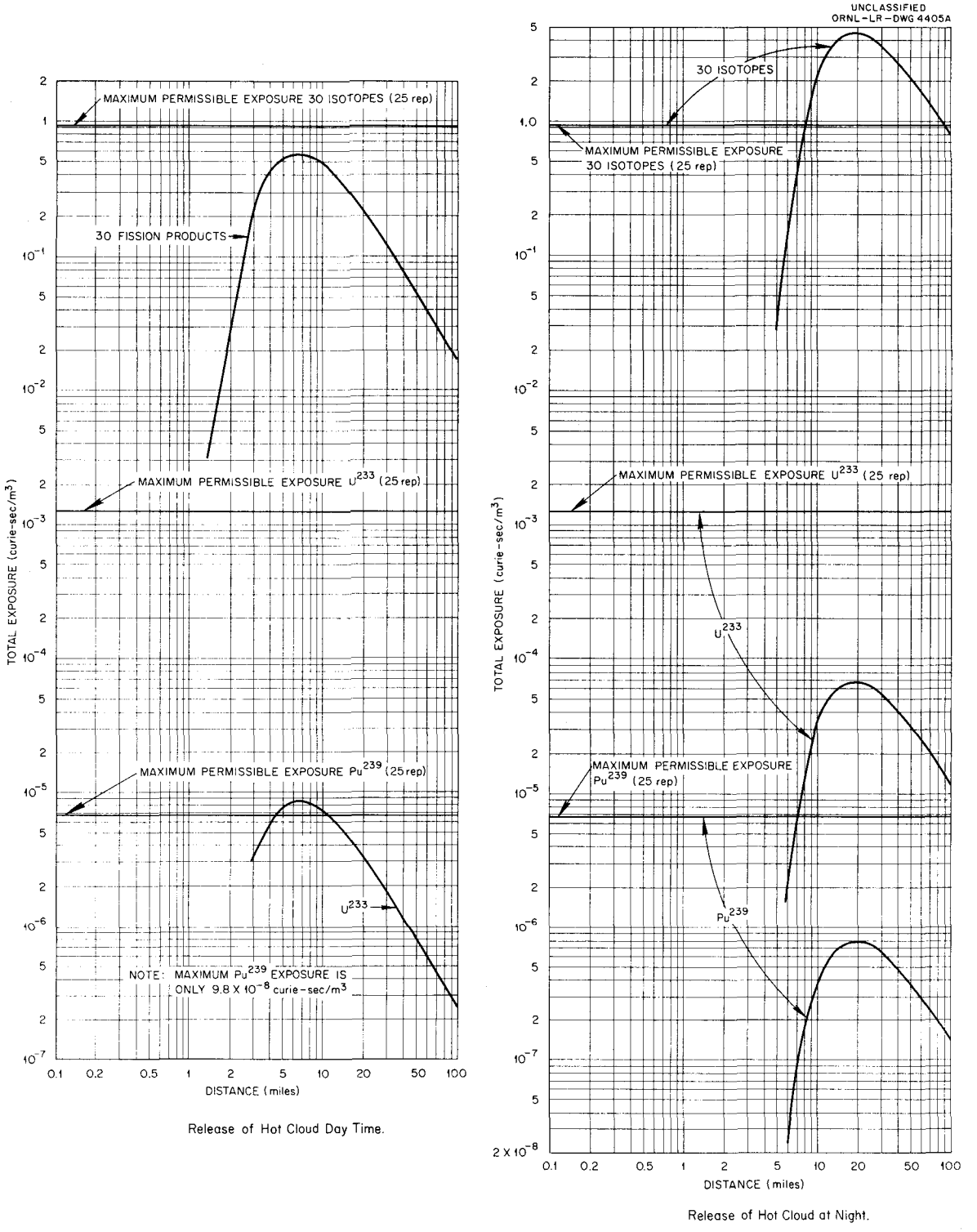

Fig. 6.19. Estimated Exposure from a Hot Cloud Release.

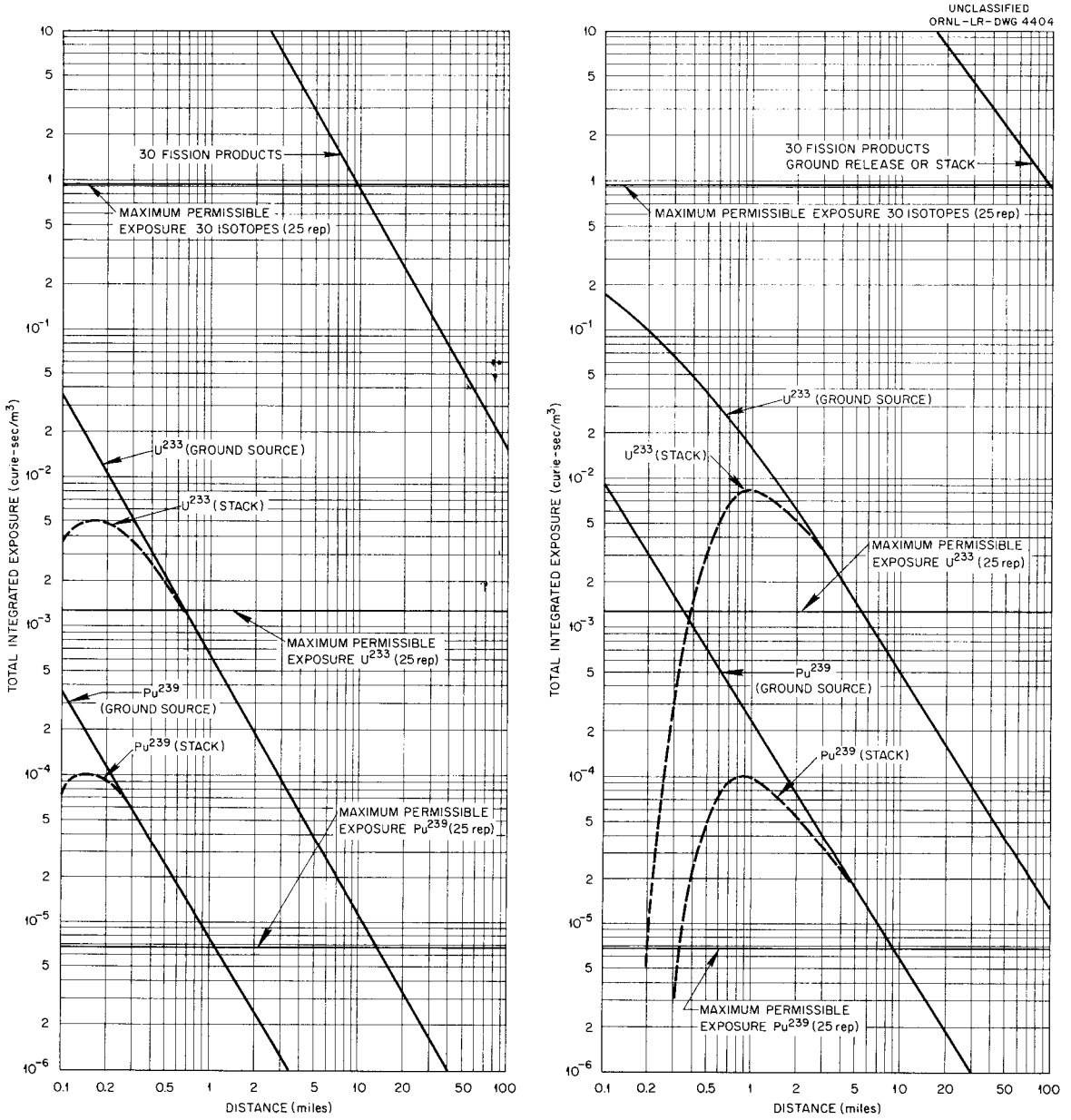

Release of Cold Cloud in Day Time.

Release of Cold Cloud at Night.

Fig. 6.20. Estimated Exposure from a Cold Cloud Release.

REFERENCES

1. M. C. Edlund and P. M. Wood, *Physics of Homogeneous Reactor Test – Statics,* ORNL-1780 (Aug. 27, 1954).
2. P. R. Kasten, *Dynamics of the Homogeneous Reactor Test,* ORNL-2072 (June 7, 1956).
3. P. R. Kasten, *Operational Safety of the Homogeneous Reactor Test,* ORNL-2088 (July 3, 1956).
4. S. E. Beall and S. Visner, *Homogeneous Reactor Test Summary Report for the Advisory Committee on Reactor Safeguards,* ORNL-1834 (Jan. 7, 1955).
5. S. E. Beall and S. Visner, *Revision for the HRT Summary Report – ORNL-1834,* ORNL CF-55-3-14 (Mar. 1, 1955).
6. R. B. Briggs, *Aqueous Homogeneous Reactors for Producing Central-Station Power,* ORNL-1642 (May 4, 1954).
7. M. C. Edlund, *Comments on Proposed HRE-2,* ORNL CF-53-10-209 (Oct. 30, 1953).
8. M. Tobias, *Critical Concentrations in HRE No. 2 Type Reactors at 300°C,* ORNL CF-53-11-134 (Nov. 20, 1953).
9. M. Tobias, *Critical Mass Calculations for a Proposed Rebuilt HRE,* ORNL CF-54-1-45 and Erratum (Jan. 4, 1954).
10. R. B. Briggs, *Critical Concentration of U-235 in Core of HRT,* ORNL CF-54-2-165 (Feb. 23, 1954).
11. W. R. Gall, *Nuclear Data for HRE,* ORNL CF-54-1-11 (Jan. 7, 1954).
12. S. E. Beall, *Plan of Operation for HRT,* ORNL CF-54-4-7 (Apr. 7, 1954).
13. S. Visner, *Experimental Physics Program for HRT,* ORNL CF-55-2-178 (Feb. 28, 1955).
14. S. Visner, *Breeding Demonstration in the HRT,* ORNL CF-55-2-2 (Feb. 2, 1955).
15. P. M. Wood, *Constants for HRT Nuclear Calculations,* ORNL CF-54-3-160 (Mar. 30, 1954).
16. P. M. Wood, *HRT Criticality Calculations – D_2O Reflector and 633 gm/kg D_2O Thorium – D_2O Blanket,* ORNL CF-54-3-174 and Supplement (Mar. 25, 1954).
17. P. M. Wood, *Criticality Calculations on HRT with UO_2SO_4 Blanket,* ORNL CF-54-4-9 (Apr. 5, 1954).
18. P. M. Wood, *Effect of Using Ordinary Water in the HRT with 500 gm/l (at 280°C) ThO_2 Slurry Blanket,* ORNL CF-54-5-197 (May 24, 1954).
19. C. W. Nestor, *HRT Critical Concentration as a Function of Temperature,* ORNL CF-56-6-123 (June 20, 1956).
20. C. W. Nestor and P. R. Kasten, *HRT Fuel Concentration as a Function of Poison Level,* ORNL CF-56-4-66 (Apr. 11, 1956).
21. P. N. Haubenreich, *Effect of Core Corrosion Sample Assembly on HRT Critical Temperature,* ORNL CF-57-7-21 (July 18, 1957).
22. P. R. Kasten *et al., HRP Quart. Progr. Rept. Oct. 31, 1957,* ORNL-2432, p 16–18.
23. P. M. Wood, *Flux Distribution in the HRT with 300 gm/l Natural Uranium Blanket,* ORNL CF-54-3-142 (Mar. 22, 1954).
24. P. M. Wood, *Heat Generation in the Blanket Region of the HRT with D_2O Reflector and ThO_2 Slurry Blanket, and Buildup of U-233 in the ThO_2 Blanket,* ORNL CF-54-6-184 (June 15, 1954).
25. M. Tobias, *Fluxes at the Inside Surface of the Pressure Vessel as a Function of Lethargy for the HRT as Determined from the Univac Eyewash Code,* ORNL CF-55-5-66 (May 10, 1955).

26. V. K. Paré, *Reactivity Effects of Non-Uniform Density Changes in HRT*, ORNL CF-54-4-182 (Apr. 26, 1954).

27. V. K. Paré, *Temperature Coefficients and Maximum Rates of Increase of Reactivity for HRT*, ORNL CF-54-6-200 (June 15, 1954).

28. S. Visner and L. C. Noderer, *Criticality of U^{235}-H_2O-D_2O Systems in Cylindrical Geometry*, ORNL CF-54-5-170 (May 20, 1954).

29. S. Visner, *Fuel Dump Tanks for HRT*, ORNL CF-54-4-30 (Apr. 2, 1954).

30. S. Visner, *Dump Tanks for HRT Blanket*, ORNL CF-54-6-16 (June 3, 1954).

31. R. D. Cheverton, *Allowable Pressure Differential for HRT Core Vessel*, ORNL CF-57-9-36 (Spet. 13, 1957).

32. S. Visner, *Possible Hazards in HRT Startup*, ORNL CF-54-4-81 (Apr. 8, 1954).

33. P. R. Kasten and V. K. Paré, *Safety of HRT*, ORNL CF-54-3-164 (Mar. 25, 1954).

34. P. R. Kasten, *Mechanical Pressurizer as an HRT Safety Device*, ORNL CF-54-4-228 (Apr. 22, 1954).

35. P. R. Kasten, *Design Basis for Volume of Pressurizer in HRT*, ORNL CF-54-5-188 (May 24, 1954).

36. P. R. Kasten, *HRT Pressurizer Design*, ORNL CF-56-2-69 (Feb. 16, 1956).

37. P. R. Kasten, *HRT Safety Considerations*, ORNL CF-54-9-226 (Sept. 30, 1954).

38. P. R. Kasten, *HRT Safety Calculations*, ORNL CF-55-2-75 (Feb. 14, 1955).

39. P. R. Kasten, *Homogeneous Reactor Safety*, ORNL CF-55-5-51 (May 9, 1955).

40. P. R. Kasten and R. S. Stone, *Cooling of HRT Fuel Solution as a Result of Changing Heat Exchanger Operating Conditions*, ORNL CF-55-4-19 (Apr. 1, 1955).

41. G. T. Trammell and T. A. Welton, *Comments on the Physics of the HRT, with Special Reference to Reactor Kinetics*, ORNL CF-55-2-74 (Feb. 15, 1955).

42. P. R. Kasten, *Comments on Review of HRT Reactor Kinetics*, ORNL CF-55-3-23 (Mar. 3, 1955).

43. P. R. Kasten, *Reactivity Effects Associated with Two-Phase Separation*, ORNL CF-56-4-103 (Apr. 16, 1956).

44. P. N. Haubenreich, *Preliminary Calibration of Fuel Dump Tanks, HRT Report II A (7) c*, ORNL CF-55-12-23 (Dec. 6, 1955).

45. J. W. Hill, Jr., *HRT Power and Fuel Temperatures After Fuel Circulation Stops*, ORNL CF-54-9-64 (Sept. 9, 1954).

46. M. W. Rosenthal and H. C. Claiborne, *Effect of Heat Generation on Dumping of HRT*, ORNL CF-55-12-48 (Dec. 7, 1955).

47. M. W. Rosenthal and H. C. Claiborne, *Effects of Heat Generation and Heat Removal on HRT Shutdown and Dump*, ORNL CF-56-2-128 (Feb. 8, 1956).

48. M. I. Lundin, *Design Criteria – HRT Pressurization Control*, ORNL CF-56-4-55 (Apr. 10, 1956).

49. R. E. Aven and M. W. Rosenthal, *Delay Time Required to Reduce D_2 Explosion Hazard During HRT Dump*, ORNL CF-56-5-40 (May 1, 1956).

50. L. C. Wilbur, *Time Required for Venting the HRT Pressurizer During a Dump*, ORNL CF-56-9-2 (Sept. 4, 1956).

51. E. H. Gift and H. A. McLain, *Delay Time Prior to Dumping the HRT*, ORNL CF-57-1-103 (Jan. 10, 1957).

52. P. R. Kasten, *Stability of Homogeneous Reactors,* ORNL CF-55-5-163 (May 25, 1955).

53. M. Tobias, *The HRT and "Walk Away" Phenomena,* ORNL CF-54-12-206 (Dec. 28, 1954).

54. M. Tobias, *Further Studies of the "Walk Away" Phenomena for the HRT,* ORNL CF-55-3-60 (Mar. 2, 1955).

55. P. R. Kasten, *Linearized Stability Criteria for HRT Type Reactors,* ORNL CF-54-4-183 (Apr. 21, 1954).

56. S. E. Beall *et al., HRP Quart. Progr. Rept. Jan. 31, 1954,* ORNL-1678, p 3–11.

57. S. Visner, *Possible Release of HRT Activity Through Auxiliary Lines,* ORNL CF-55-2-3 (Feb. 2, 1955).

58. C. J. Borkowski, *Design Review Committee Report on the HRT,* ORNL CF-55-6-53 (June 7, 1955).

59. J. A. Swartout, *Comments on CF-55-6-53: Design Review Committee Report of the HRT,* ORNL CF-55-7-86 (July 20, 1955).

7. Chemical Technology of Fuel Solution

7.1 INTRODUCTION

The chemical and physical properties of aqueous fuel solutions are important because they affect the design, construction, operation, and safety of homogeneous reactors. This chapter will summarize those chemical and physical properties, except corrosion, which are important in reactor design. Corrosion has been discussed in connection with the various components; however, general discussions of the subject are available.[1,2] Studies pertaining to fuel-solution chemistry are routinely reported in the project progress reports.

Solubility relationships are discussed first, followed by radiation effects on water, physical properties, and finally a brief description of the chemical plant associated with HRE-2.

7.2 SOLUBILITY OF URANYL SULFATE SOLUTIONS

Uranyl salts are generally very soluble in water at relatively low temperatures (below 200°C). At higher temperatures miscibility gaps appear in the system. These are manifested by the appearance of a basic-salt solid phase from dilute solutions and by the appearance of a uranium-rich second liquid phase from more concentrated solutions. Both the salt and the heavy second liquid phase are characterized by greater uranium-to-sulfate ratios than that present in the system at lower temperatures; this suggests that hydrolysis of the uranyl ion is responsible for the immiscibility in each instance. Hydrolysis can be repressed effectively by increasing the acidity of the solution or by the addition of a suitable complexing agent for the uranyl ion. Even the anions of the solute itself may be considered to repress hydrolysis to some extent, since very dilute solutions hydrolyze much more readily than more concentrated solutions.[3,4]

The solubility of uranyl sulfate in water and the characteristics of the phase relationships at elevated temperatures are shown in the binary phase diagram, Fig. 7.1. However, it is necessary to consider the ternary system, UO_3-SO_3-H_2O, in order to predict the hydrolytic precipitation of the basic solid phase, β-$UO_3 \cdot H_2O$, which occurs in very dilute solutions at elevated temperatures, and the position of the tie lines in the liquid-liquid miscibility gap. Some of the ternary isotherms are shown in Fig. 7.2. A point of special significance is that the solubility of UO_3 in uranyl sulfate solutions decreases with increasing temperature to the extent that at 250°C excess acid is required to maintain homogeneity in dilute solutions. Excess acid also has a marked effect on the liquid-liquid miscibility gap[5] as shown in Fig. 7.3. Figure 7.4 shows how the two-liquid phase transition temperature is lowered when the solvent is changed from light water to heavy water.

Study of the data leads to the following general conclusions with respect to the stability of uranyl sulfate solutions:

1. Stoichiometric uranyl sulfate solutions in light and heavy water are unstable at temperatures of 280°C and above because of hydrolysis.
2. Stability up to approximately 325°C is provided at concentrations up to 2.5 wt % by the addition of a 50 mole % excess of sulfuric acid.
3. Stability up to as high as 400°C is provided at uranium concentrations above 20 wt % by the addition of a 100 mole % excess of sulfuric acid.[3,4]

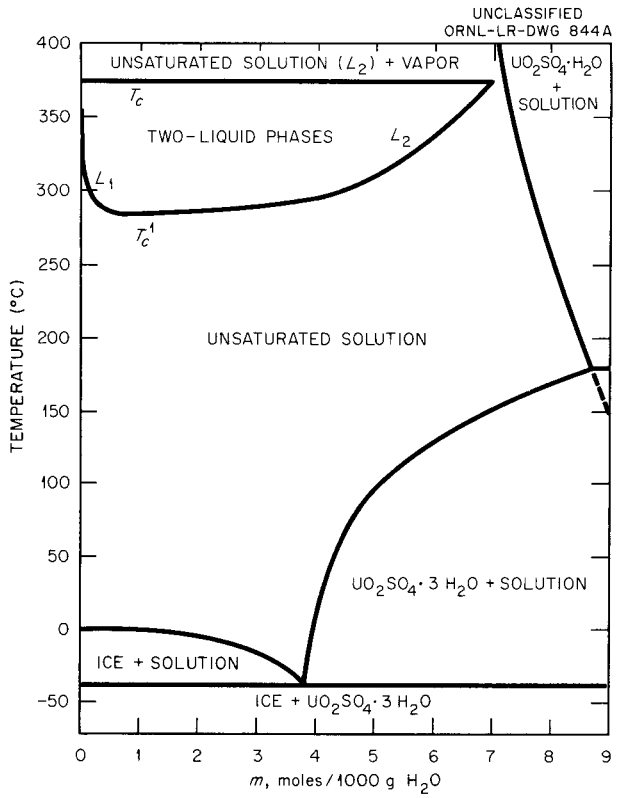

Fig. 7.1. Phase Diagram for the System UO_2SO_4-H_2O.

Solubility relationships in uranyl sulfate sulfate solutions containing cupric copper are of special interest, since copper is added to the HRE-2 fuel solution as a recombination catalyst. Copper sulfate solutions also undergo hydrolytic precipitation at elevated temperatures. Even though the concentration of cupric ion required for recombination may be quite low, its presence influences the phase relationships as shown in Fig. 7.5. This influence is most significant in dilute solutions.

Nickel, a corrosion product from the austenitic-stainless-steel reactor system, appears as a soluble contaminant in the fuel solution. The five-component system, UO_3-CuO-NiO-SO_3-H_2O, which represents the HRE-2 fuel solution, has been investigated in detail.[6–9] Figure 7.6 summarizes earlier information for systems having compositions approximately that of the reactor fuel solution.[10–12]

Investigations of the radiochemical analytical requirements revealed a number of problems which would require special attention in order to obtain quantitative information from fuel samples taken during reactor operation.[13–17] As a result special radioanalytical techniques were developed and applied to the highly radioactive fuel samples.[18]

7.3 RADIATION EFFECTS

Energy is dissipated in the fuel solution by the stopping of energetic particles. These include mainly the fission recoil particles, and also neutrons, protons, fast electrons, and gammas. The extent to which each contributes to the total energy absorbed in the fuel solution depends on the design of the reactor and the composition of the solution. Water is decomposed by all types of high-energy radiation to give hydrogen, hydrogen peroxide, and oxygen. If the decomposition products are confined in the solution, back-reactions occur leading to steady-state concentrations.

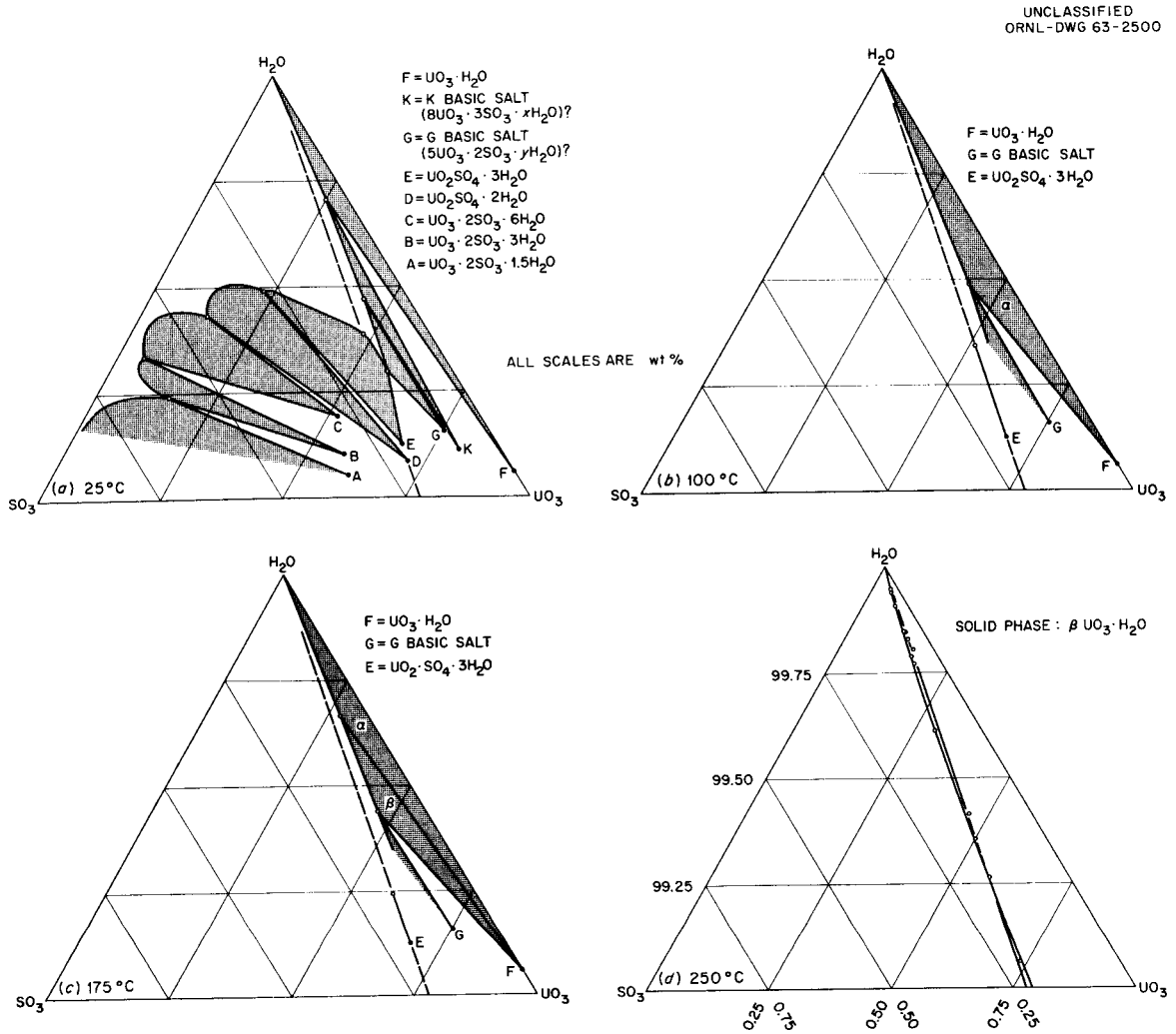

Fig. 7.2. The System UO_3-SO_3-H_2O.

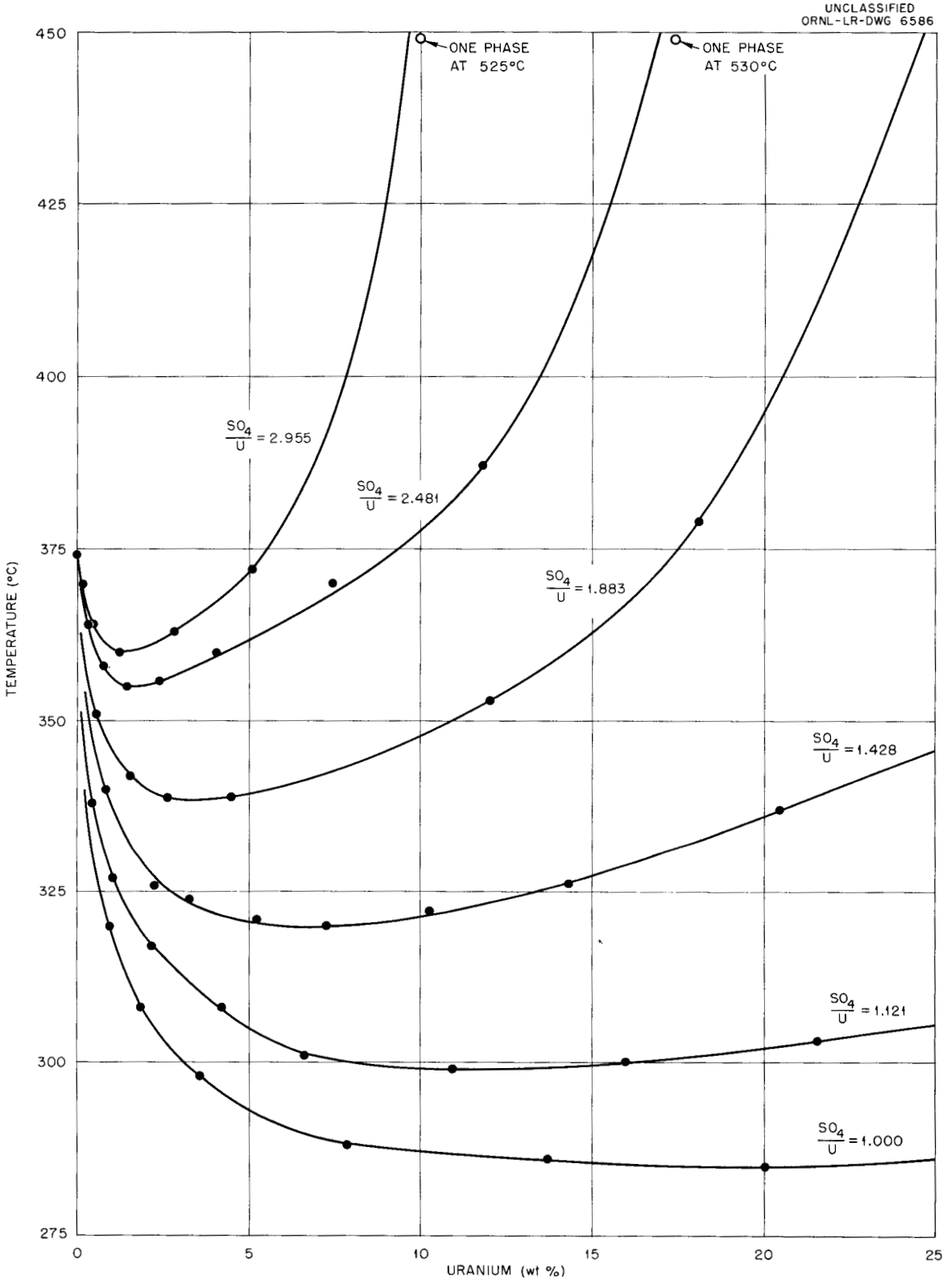

Fig. 7.3. Coexistence Curves for Two Liquid Phases in the System UO_2SO_4-H_2SO_4-H_2O.

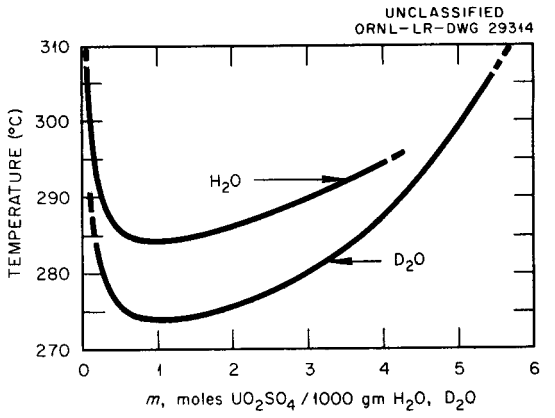

Fig. 7.4. Two-Liquid Phase Region of Uranyl Sulfate in Ordinary and Heavy Water.

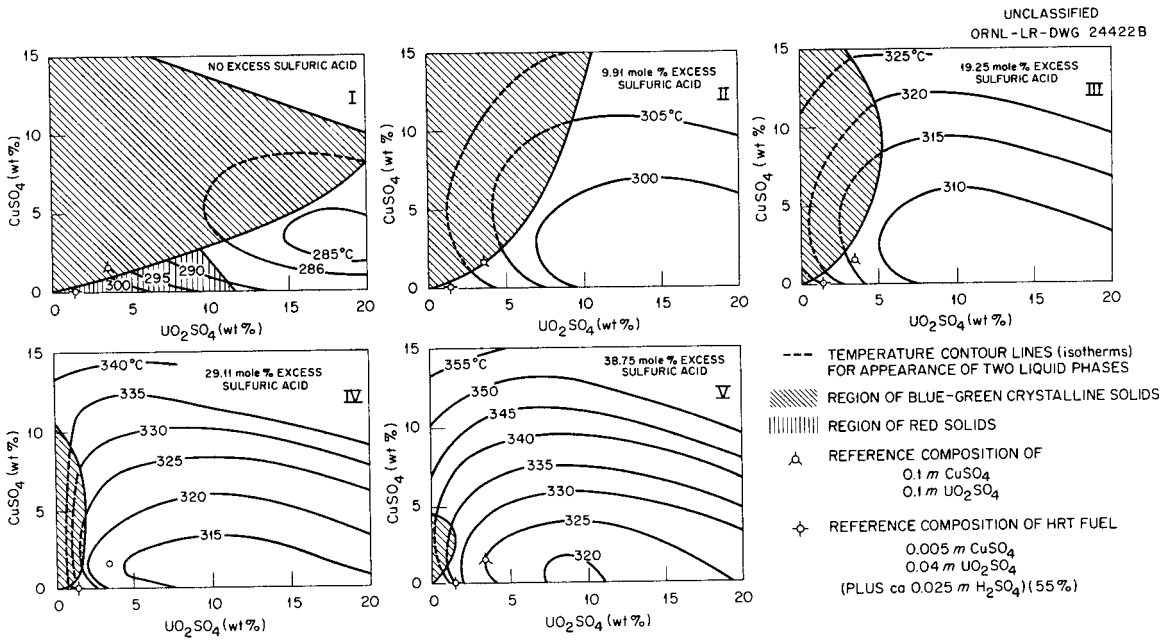

Fig. 7.5. Phase Transition Temperatures in Solutions Containing Cupric Sulfate, Uranyl Sulfate, and Sulfuric Acid.

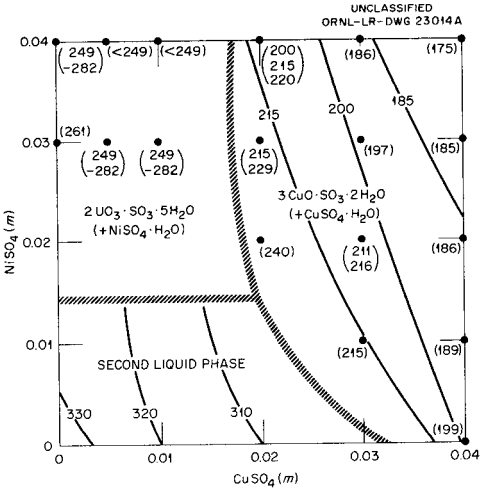

Fig. 7.6. The Effect of $CuSO_4$ and $NiSO_4$ on Phase Transition Temperatures (0.04 m UO_2SO_4; 0.01 m H_2SO_4).

The rate of production, the rate of the back reaction, and hence the steady-state concentration are sensitive to the nature of radiation, the type, the concentration of solute present, and the temperature.[1,19,20]

The yields of the primary chemical species depend markedly on the type of radiation, or more specifically, on the energy transferred to the solution per unit path length of the particle. The linear energy transfer (LET) varies from 5×10^4 kev per micron of path length for fission recoils to about 0.2 kev per micron for fast electrons. The yields for H_2 and H_2O_2 are largest for radiations such as fission recoils with large values of LET, while the yields of H and OH are largest for radiations such as fast electrons with small values of LET. This is shown by Fig. 7.7 where the yields ("G-values") of H and H_2 are plotted vs LET. Figure 7.8 shows how the yield of H_2 produced by fission recoil decomposition and by gamma-ray decomposition varies with uranium concentration.[19]

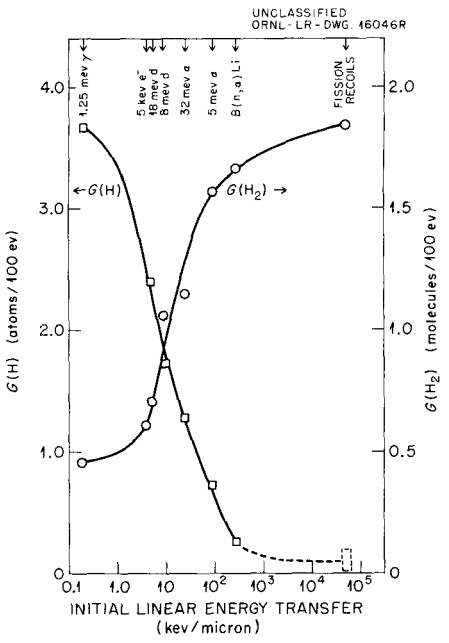

Fig. 7.7. Yields of Atomic and Molecular Hydrogen from the Decomposition of Water by Various Ionizing Radiations.

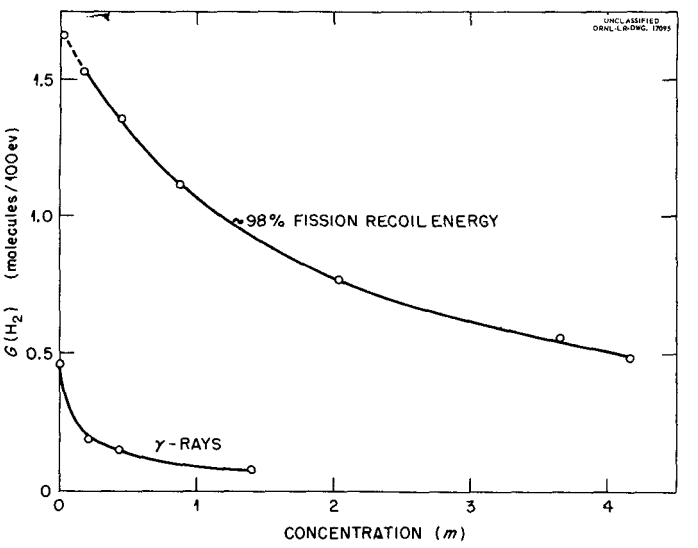

Fig. 7.8. The Effects of Uranium Concentration and Type of Radiation on the Initial H_2 Yield from Irradiated UO_2SO_4 Solutions.

7.4 RECOMBINATION

Hydrogen and oxygen, dissolved in aqueous solutions at elevated temperatures, have been found to react smoothly to form water when dissolved copper salts are present in the solution as homogeneous catalysts.[1,21] This reaction is of interest in aqueous homogeneous reactors in that it provides a means for suppressing formation of hydrogen-oxygen gas bubbles from the decomposition of water by ionizing radiation. The reaction rate is first order in dissolved hydrogen and copper concentration and is independent of oxygen concentration. The reaction rate for D_2 is about 60% of that for H_2.

A detailed study of the required copper concentration in HRE-2 was made as a function of power level, operating temperature, system overpressure, and fraction of gas recombined internally.[22] With the reactor operating at a given power level, P_c in megawatts, the production of radiolytic deuterium has been estimated to be $3.5 \times 10^3 P_c$ cc/sec (STP).[23] Sufficient copper is provided to recombine all the radiolytic gas internally; however, the recombiner in the low-pressure system was designed to recombine the gases produced at 1-Mw power operation[24] so that some gas letdown can be used to strip fission product gases from the fuel solution.[25,26]

The required copper concentration is shown in Fig. 7.9 as a function power level for 70, 80, 90, and 100% internal recombination, based on an operating pressure of 2000 psi and an average core temperature of 278°C. Figure 7.10 shows the same information for an operation pressure of 1700 psi. The effect of overpressure and power level on required copper concentration for 100% internal recombination is shown in Fig. 7.11. The effect of core exit temperature on copper concentration is shown in Fig. 7.12. Since the required copper concentration for internal recombination is a function of power level and temperature and is not readily changed, the problems concerned with initial reactor operation at low temperatures (approximately 250°C) were investigated.[27] The recommended mode of initial operation was to add sufficient copper to recombine all the gas produced at 5 Mw of power at an average core temperature of 250°C. (Instead of following this recommendation, copper was added in steps during the initial period of operation in order to carry out a series of recombination experiments.)

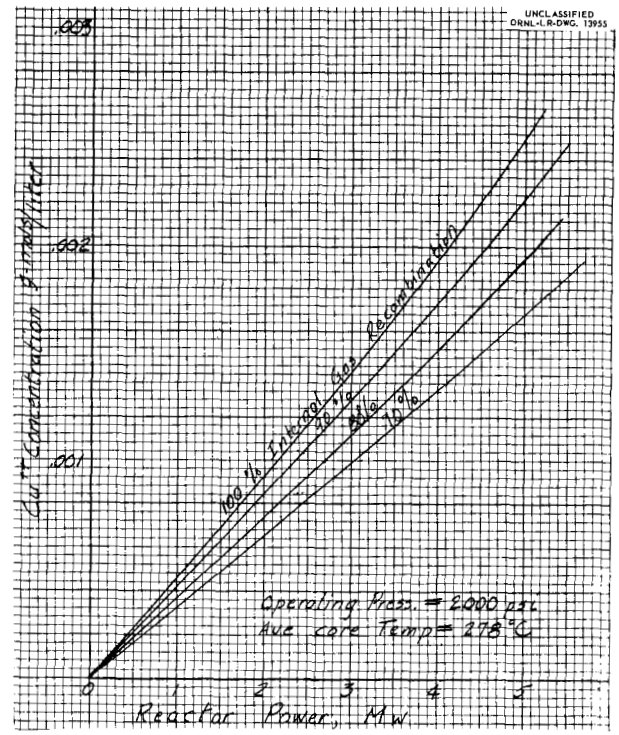

Fig. 7.9. Cu^{2+} Concentration vs Reactor Power.

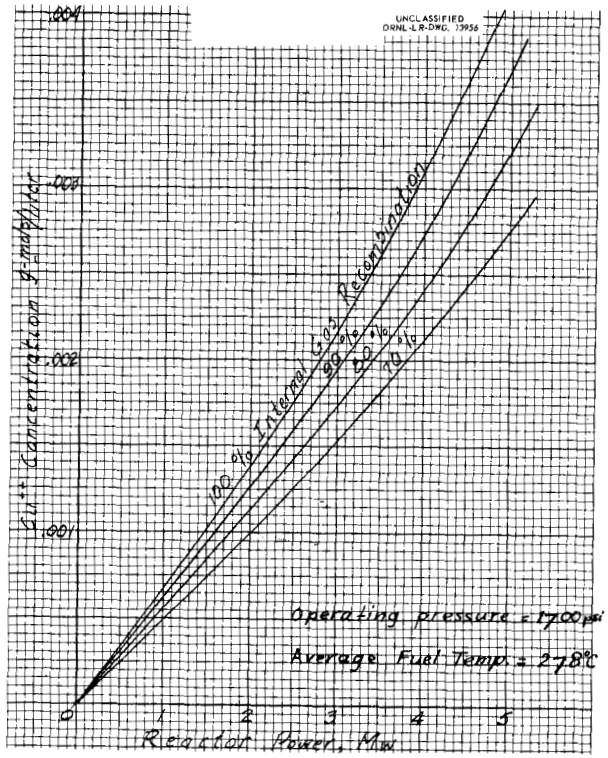

Fig. 7.10. Cu^{2+} Concentration vs Reactor Power.

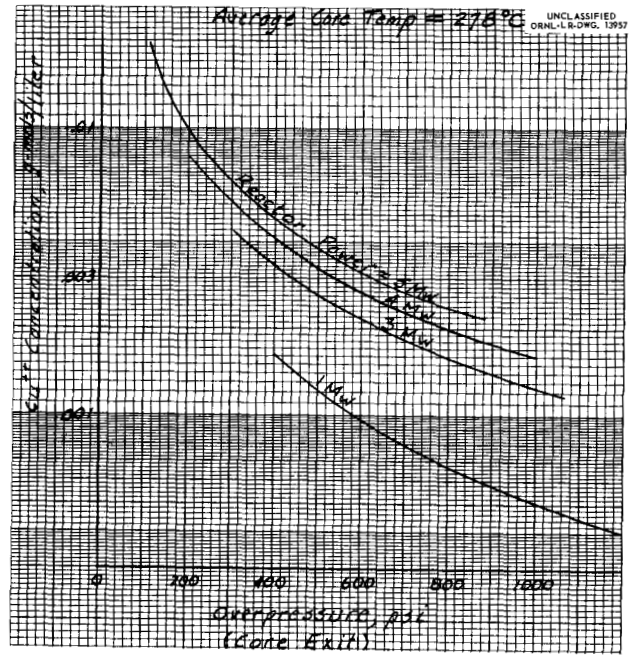

Fig. 7.11. Minimum Cu^{2+} Concentration vs Overpressure at Core Exit for 100% Internal Recombination.

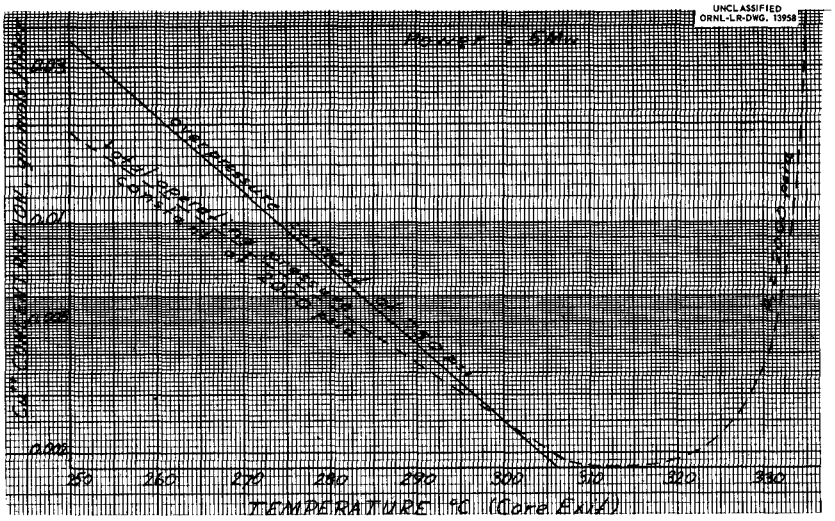

Fig. 7.12. Minimum Cu^{2+} Concentration vs Core Exit Temperature for 100% Internal Recombination.

7.5 PHYSICAL PROPERTIES

Knowledge of the physical properties of aqueous fuel solutions is required for nuclear physics calculations and analysis of reactor performance, for engineering design, and for interpretation of observed effects in reactor operation. The scarcity of such information prompted research programs to produce the necessary data. Progress and topical reports, in which techniques, apparatus, and data are reported, are available.[28–41] These data are summarized in ref 4. Physical property data used in the design of the HRE-2 have been reported.[42–46]

7.6 HRE-2 CHEMICAL PLANT

One of the objectives of the HRE-2 is to develop and test methods for the continuous removal of fission and corrosion products from the circulating fuel stream. Consistent with this objective a small chemical processing facility for removal of insoluble materials was constructed in a shielded cell adjacent to the reactor cell. A schematic flowsheet for this facility is shown in Fig. 7.13, and a model of the cell equipment is shown in Fig. 7.14. The design of the chemical processing plant for solids removal has been reported in detail.[47–53]

In the HRE-2, volatile fission products (xenon, krypton, and iodine) are continuously stripped from the fuel solution in the low-pressure system. The nonvolatile fission products and the corrosion products (removed via the chemical plant) may be classified, according to their chemical behavior at reactor operating temperature, as (1) only slightly soluble, (2) hydrolyzable to insoluble oxides, (3) soluble, and (4) of uncertain behavior. Most of the neutron poisons and most of the corrosion products are in the first two groups and can be readily removed by centrifugation. Of the remaining fission and corrosion products, nickel is probably the worst because of its effect on fuel solution stability as well as its effect as a neutron poison. If the processing rate is high enough to keep the nickel concentration low, the other soluble nuclides are of little importance.[47]

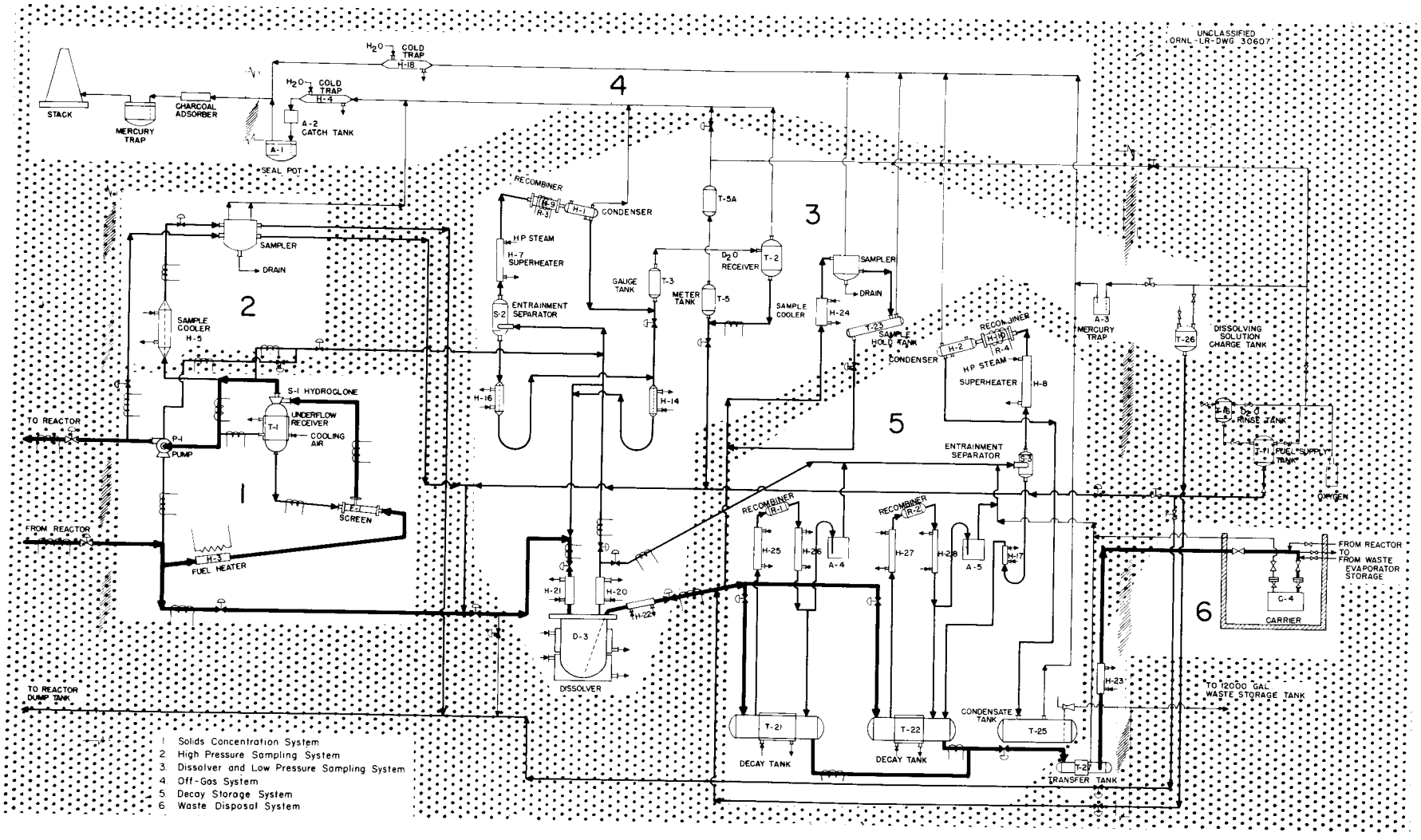

Fig. 7.13. HRT-CPP Schematic Flowsheet.

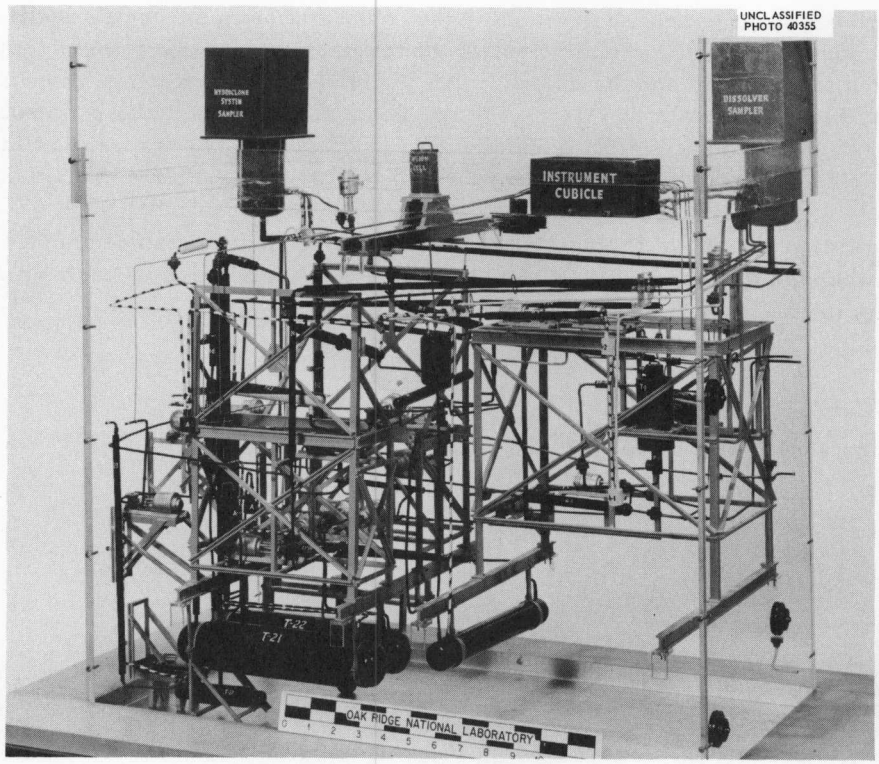

Fig. 7.14. Layout of HRT-CPP.

With the reactor operating at a power level of 5 Mw, about 5 g of insoluble fission products are produced per day. About 53 g of corrosion products are produced per day, based on assumed corrosion rates of 10 mpy for the Zircaloy-2 core tank and 1 mpy for the stainless steel system. These solids are removed from the fuel solution by deposition on hot surfaces in the reactor system, by agglomeration and settling out in relatively stagnant regions in the reactor system (such as the dump tanks), and by the chemical processing plant. At the time the reactor system was being designed, the extent to which each of these competing mechanisms governed the behavior of the solids was not known.[54,55]

A bypass stream of about 1 gpm (at core outlet conditions) is taken from the reactor fuel system upstream from the fuel heat exchanger, passed through the solids concentration system in the chemical processing plant, and returned to the reactor circulating loop downstream from the heat exchanger.[56–58] The solids concentrating system consists of a heater for making up heat losses, a screen to prevent plugging of the hydroclone port, a hydroclone for concentrating the solids,[59,60] an underflow pot for temporary storage of the concentrated solids, and a pump for returning the bypass stream to the reactor circulating system. By locating the process feed and return lines upstream and downstream from the heat exchanger, respectively, the pressure drop across the heat exchanger (about 40% of the total loss in the reactor system) is utilized to help drive the solution through the hydroclone.

Fission and corrosion product solids are separated from the fuel solution by a hydraulic cyclone separator,[59,60] shown schematically in Fig. 7.15. A strong centrifugal field is established in the hydroclone by the inlet stream as it enters through a tangential entry. The heavier particles are centrifuged to the periphery of the clone and flow downward into the 2-gal underflow receiver. Clarified solution flows from the underflow pot through the vortex finder, through the overflow port, and to the pump for return to the system. As the hydroclone is operated the concentration of solids

in the underflow pot increases, and eventually the concentration in the overflow will equal that in the inlet. Long before such a condition exists, however, the processing plant is temporarily isolated from the reactor plant and the underflow pot is drained. Heavy water is evaporated and recovered for return to the reactor system. The solids are dissolved in sulfuric acid and transferred to a storage tank for radioactive decay. Following a suitable decay period, the solution is transferred to shielded carrier outside of the cell for transport to a solvent extraction plant for further processing.

A fuel addition system is incorporated in the processing plant to replace uranium burned in the reactor and removed with the solids.[61] An alternative uranium addition system is provided in conjunction with the reactor dump tanks.

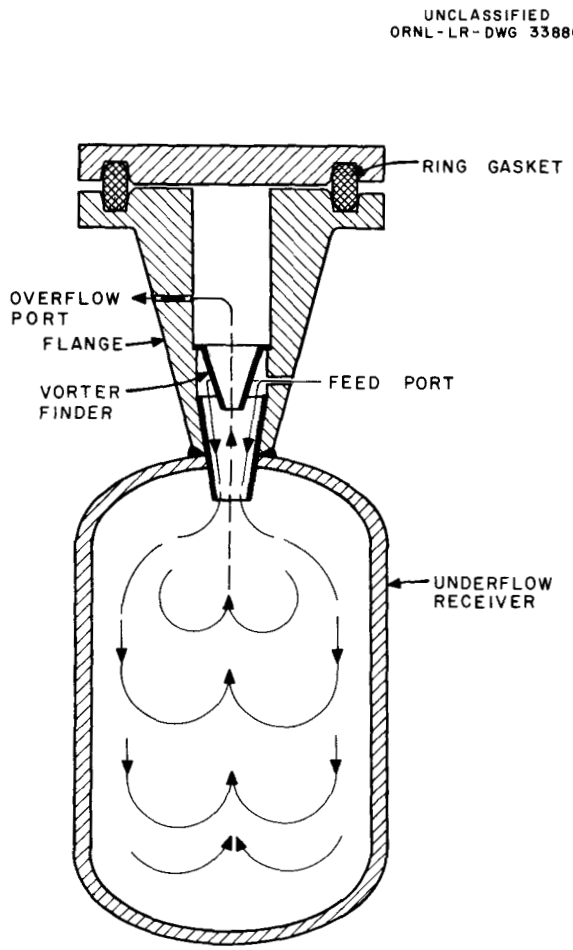

Fig. 7.15. HRT-CPP Hydroclone and Induced Underflow Receiver – Schematic Representation.

REFERENCES

1. H. F. McDuffie, *Corrosion by Aqueous Reactor Fuel Solutions*, ORNL CF-56-11-72 (Nov. 14, 1956).
2. G. H. Jenks, *Review and Correlation of In-Pile Zircaloy-2 Corrosion Data and a Model for the Effect of Irradiation*, ORNL-3039 (July 6, 1961).
3. C. H. Secoy, *Aqueous Fuel Systems. Material for Revised Reactor Handbook*, ORNL CF-57-2-139 (Feb. 28, 1957).
4. J. A. Lane, H. G. MacPherson, and F. Maslan (eds.), *Fluid Fuel Reactors*, Addison-Wesley, Reading, Mass., 1958.
5. C. H. Secoy, *Estimated Two-Liquid Phase Temperatures for HRT Soup*, ORNL CF-54-9-13 (Sept. 1, 1954).
6. C. H. Secoy, *A Study of Dilute Solutions in the System, UO_2SO_4-$CuSO_4$-$NiSO_4$-H_2SO_4-H_2O*, ORNL CF-56-5-114 (May 17, 1956).
7. W. L. Marshall, J. S. Gill, and R. E. Moore, *Two-Liquid-Phase Temperature Limits for the Homogeneous Reactor Fuel Solution and its Concentrates; Comments on Solid-Liquid Equilibria*, ORNL CF-59-8-41 (Aug. 11, 1959).
8. R. E. Moore and W. L. Marshall, *Effect of Excess Acid on Two-Liquid-Phase Temperature Limits for the Homogeneous Reactor Fuel Solution and its Concentrates*, ORNL CF-59-11-27 (Nov. 9, 1959).
9. W. L. Marshall and J. S. Gill, *Investigation of the System UO_3-CuO-NiO-SO_3-H_2O at 300°C*, ORNL CF-59-12-60, rev 1 (Jan. 27, 1960).
10. E. G. Bohlmann, *Excess Acid Requirement for HRT Solution Stability*, ORNL CF-55-8-150 (Aug. 29, 1955).
11. E. L. Compere, *Uranyl Sulfate Specification for HRT*, ORNL CF-55-8-128 (Aug. 24, 1955).
12. E. L. Compere and E. G. Bohlmann, *HRT Uranyl Sulfate Startup Procedure*, ORNL CF-55-9-27 and addendum (Sept. 7, 1955).
13. W. L. Carter, *HRP-CP: Analytical Requirements for the HRT Processing Plant*, ORNL CF-54-4-101 (Apr. 15, 1954).
14. J. Halperin and R. W. Stoughton, *Re: Determination of Cross Sections and Radiochemical Behavior Under HRT Conditions*, ORNL CF-54-5-223 (May 27, 1954).
15. R. W. Stoughton and J. Halperin, *Determination of Radiochemical Behavior, Alpha Values and Cross Sections Under HRT Conditions*, ORNL CF-55-3-111 (Mar. 18, 1955).
16. H. F. McDuffie, *Analytical Requirements for HRT-1*, ORNL CF-55-7-83 (July 18, 1955).
17. T. H. Handley and W. S. Lyon, *Radiochemical Analytical Requirements for HRT*, ORNL CF-56-1-79 (Jan. 19, 1956).
18. T. H. Handley and S. A. Reynolds, *Development of Radioanalytical Methods for HRT*, ORNL CF-56-7-118 (July 23, 1956).
19. C. J. Hochanadel, *Radiation Stability of Aqueous Fuel Systems. Material for Revised Reactor Handbook*, ORNL CF-56-11-54 (Nov. 13, 1956).
20. J. W. Boyle *et al.*, "The Radiation Chemistry of Aqueous Reactor Solutions – Part I. Radiation – Induced Decomposition," *Reactor Science and Technology*, March 1953, TID-2008.
21. H. F. McDuffie *et al.*, *The Radiation Chemistry of Homogeneous Reactor Systems. III. Homogeneous Catalysis of the Hydrogen-Oxygen Reaction*, ORNL CF-54-1-122 (Jan. 26, 1954).
22. R. E. Aven and M. C. Lawrence, *Calculation of Effects of Copper Catalyst in the HRT*, ORNL CF-56-4-4 (Apr. 10, 1956).

23. R. E. Aven and P. N. Haubenreich, *Radiolytic Gas Generation Rates in the HRT*, ORNL CF-55-8-77 (Aug. 31, 1955).

24. R. E. Aven, *HRT Recombiner Condenser Design*, ORNL CF-54-11-1 (Nov. 1, 1954).

25. R. E. Aven, *Control of Xenon Poisoning by Stripping with Gas*, ORNL CF-54-2-200 (Jan. 25, 1954).

26. P. N. Haubenreich, *Effects of Letdown Rates and Oxygen Injection Rates on Xenon Poison Level and Excess Oxygen Concentration in the HRT*, ORNL CF-57-5-100 (May 31, 1957).

27. P. N. Haubenreich, *Problem of Gas Recombination Caused by Initial Operation at Reduced Temperature*, ORNL CF-56-7-62 (July 17, 1956).

28. Mound Laboratory Research Reports: MLM-628 (Nov. 1, 1951), MLM-663 (Feb. 5, 1952), MLM-680 (Mar. 17, 1952), MLM-710 (June 17, 1952), MLM-755 (Sept. 17, 1952), MLM-790 (Dec. 17, 1952), MLM-825 (Mar. 17, 1953), MLM-863 (June 17, 1953), MLM-900 (Sept. 17, 1953), MLM-928 (Dec. 17, 1953), MLM-957 (Mar. 17, 1954), MLM-983 (June 17, 1954).

29. E. Orban, *The pH Measurement of Uranyl Sulfate Solutions from 25° to 60°C*, MLM-729 (Aug. 1, 1952).

30. J. S. Jegart *et al.*, *The Densities of Uranyl Sulfate Solutions Between 20° and 90°C*, MLM-728 (Oct. 10, 1952).

31. J. R. Heiks and J. S. Jegart, *The Viscosity of Uranyl Sulfate Solutions 20° to 90°C*, MLM-788, rev (Feb. 22, 1954).

32. M. K. Barnett and J. Jegart, *The Surface Tension of Aqueous Uranyl Sulfate Solutions Between 20° and 75°C*, AECD-3581 (Feb. 15, 1953).

33. J. R. Heiks *et al.*, *The Physical Properties of Heavy Water from Room Temperature to 250°C*, MLM-934 (Jan. 12, 1954).

34. M. K. Barnett *et al.*, *The Density, Viscosity and Surface Tension of Light and Heavy Water Solutions of Uranyl Sulfate at Temperatures to 250°C*, MLM-1021 (Dec. 6, 1954).

35. E. F. Stephans *et al.*, *The Solubility of Gases in Water and in Aqueous Uranyl Salt Solutions at Elevated Temperatures and Pressures*, BMI-1067 (1956).

36. E. F. Stephan *et al.*, *Ignition Reactions in the Hydrogen-Oxygen-Water System at Elevated Temperatures*, BMI-1138 (Oct. 2, 1956).

37. J. A. Luker and Thomas Gniewek, *Saturation Composition of Steam-Helium-Water Mixtures, PVT Data and Heat Capacity of Superheated Steam Helium Mixtures*, AECU-3299 (July 29, 1955).

38. J. A. Luker and Thomas Gniewek, *Determination of PVT Relationships and Heat Capacity of Steam-Oxygen Mixtures*, AECU-3300 (Aug. 2, 1955).

39. I. M. MacAfee, Jr., *Detonation, Explosion and Reaction Limits of Saturated Stoichiometric Hydrogen-Oxygen-Water Mixtures*, AECU-3302 (July 1, 1956).

40. P. L. McGill and J. A. Luker, *Detonation Pressures of Stoichiometric Hydrogen-Oxygen Mixtures Saturated with Water at High Initial Temperatures and Pressures*, AECU-3429 (Dec. 3, 1956).

41. R. Van Winkle, *Some Physical Properties of UO_2SO_4-D_2O Solutions*, ORNL CF-52-1-124 (Jan. 18, 1952).

42. R. E. Aven, *Physical Properties of Solutions in the HRT*, ORNL CF-54-1-161 (Jan. 25, 1954).

43. C. L. Segaser, *Physical Properties of High Concentration HRT Blanket Solutions of UO_2SO_4-D_2O from the Mound Laboratory Reports*, ORNL CF-54-4-203 (Apr. 29, 1954).

44. T. W. Leland, *Physical Properties of UO_2SO_4-D_2O Solutions and ThO_2-H_2O Slurries*, ORNL CF-54-6-258 (June 18, 1956).

45. T. W. Leland, *Evaluation of Data from Battelle Memorial Institute on Solubility of H_2 and O_2 in Solutions of UO_2SO_4 and UO_2F_2 in Water and on Explosion Limits in Gaseous Mixtures of H_2, O_2, and H_2O in H_2, O_2, He, and H_2O*, ORNL CF-54-8-215 (Aug. 23, 1954).

46. M. Tobias, *Certain Physical Properties of Aqueous Homogeneous Reactor Materials,* ORNL CF-56-11-135 (Nov. 23, 1956).

47. A. M. Rom and H. O. Weeren, *Design of Chemical Processing Plant for Homogeneous Reactor Test,* ORNL-2784 (Oct. 7, 1959).

48. H. O. Weeren, *HRT-CP Process Flowsheets,* ORNL CF-59-4-26 (Apr. 8, 1959).

49. R. K. Adams, *HRT-CP Instrumentation Design Manual*, ORNL CF-56-8-117 (Aug. 17, 1956).

50. C. S. Lisser, *Instrumentation Design Report for the HRT-Core Processing Plant,* ORNL CF-57-10-131 (Oct. 15, 1957).

51. R. B. Lindauer, *Operating Procedure for the HRT Chemical Plant,* ORNL CF-56-3-22 (Mar. 5, 1956).

52. W. L. Carter, *Design Criteria for the HRT Chemical Plant*, ORNL CF-54-11-190 (Nov. 24, 1954).

53. R. E. Blanco *et al., Review of HRT Core Processing Plant Design,* ORNL CF-56-4-171 (Apr. 26, 1956).

54. D. E. Ferguson, R. E. Leuze, and R. A. McNees, *Predicted Behavior of Fission Products in the HRT*, ORNL CF-56-2-87 (Feb. 16, 1956).

55. P. A. Haas *et al., HRP-CP: Conclusions Concerning the Predicted Behavior of Insoluble Corrosion and Fission Products in the HRT,* ORNL CF-58-1-97 (Jan. 23, 1958).

56. W. L. Carter, *Location of Piping Connections Between HRT Chemical Plant and Reactor,* ORNL CF-55-1-157 (Jan. 20, 1955).

57. S. E. Beall, *Location of Piping Connections between HRT Chemical Plant and Reactor,* ORNL CF-55-2-15 (Feb. 7, 1955).

58. W. L. Carter, *Discussion with S. E. Beall on Design Matters of Mutual Interest to Chemical Processing and Reactor Personnel*, ORNL CF-55-2-17 (Feb. 2, 1955).

59. P. A. Haas *et al., HRP – Hydraulic Cyclone Study for Liquid-Solid Separation,* ORNL CF-56-8-132 (Aug. 7, 1956).

60. P. A. Haas, *Hydraulic Cyclones for Application to Homogeneous Reactor Chemical Processing,* ORNL-2301 (Nov. 18, 1957).

61. W. L. Carter, *HRP-CP: Design and Operation of Fuel Addition System for the HRT Chemical Processing Plant*, ORNL CF-56-2-109 (Feb. 17, 1956).

8. Instrumentation, Controls, and Electrical System

8.1 INTRODUCTION

Instrumentation is required in HRE-2 to measure and control process variables, to indicate and prevent unsafe operating conditions, and to provide data for judging the performance of the reactor system. In general, the instrumentation and controls are similar to those employed in high-pressure steam and chemical plants with the addition of radiation instrumentation for nuclear operation. Measured process variables include pressures, temperatures, differential pressures, flow rates, liquid levels, weights, and radiation levels. In addition measurements are made of voltages, currents, and power in the electrical system.[1] The associated chemical plant is instrumented and controlled separately from the reactor system.[2,3]

The majority of instrument components are standard, commercially available items. However, special design and development were required for a number of components to provide adequate resistance to radiation damage and to provide absolute containment of radioactive process fluids. Both pneumatic and electrical transmission are used in the instrumentation system; however, electrical signals are transduced to pneumatic where control actions are required or where recording on miniature recorders are desired. A typical instrument and control loop is shown in Fig. 8.1.

Because of the inherent nuclear control resulting from the large negative temperature coefficient in HRE-2, control rods and associated servo-systems are not required. Neutron monitoring instrumentation is necessary to provide information and signals to actuate controls for safe operation of the reactor. Instrumentation and control loops are included in the schematic process of flowsheets for the reactor systems (see chap. 2). The applications have been itemized in a complete tabulation of the instrumentation,[4] and detailed information is available in the specification sheets.[5] The operators' manual[6] describes in detail the instrumentation, interlocks, etc., associated with the various components and reactor systems.

In addition to the instrumentation indicated on the flowsheets, a remote area gamma monitoring system is used to detect the escape of radioactive materials from the reactor system. Similarly, a personnel monitoring system monitors all working areas.

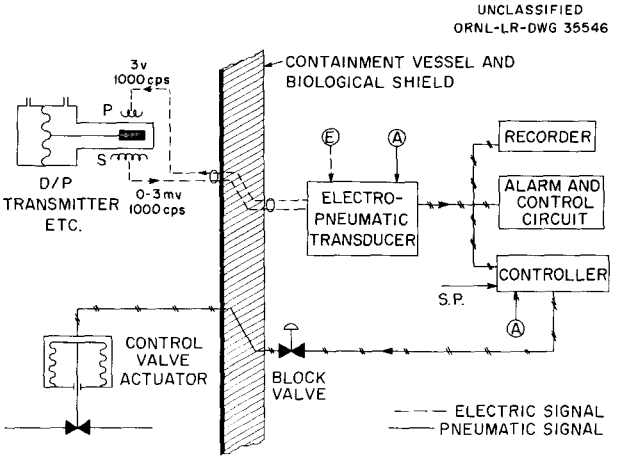

Fig. 8.1. Typical Nuclear Plant Instrumentation and Control Loop.

8.2 DESIGN CONSIDERATIONS

The instrumentation system is designed for centralized control of the reactor system. All readout and control devices necessary for routine operation are located in the main control room.[7] The instruments are arranged in a "visual aid" form to reduce operational errors and to facilitate the training of reactor operation's personnel.

Design considerations employed in the reactor instrumentation and control systems are similar to those employed in high pressure steam and chemical plants, with the exception of nuclear instrumentation. In addition to the usual problems of obtaining structural strength, reliability, and freedom from temperature and pressure effects, it was frequently necessary to provide for one or more of the following: absolute containment of process fluids, corrosion resistance, drainability, small liquid holdup, immunity to damage from immersion in water, amenability to remote adjustment and removal, and resistance to radiation damage.[7] Selection of components and systems were, in general, based on reliability, accuracy, compatibility with centralized control philosophy, and cost.

Interesting design features of the instrumentation and controls system include the following:

1. Key transmitters are duplicated. Signals from electrical transmitters are converted to pneumatic signals by transducers. The output of the unit not controlling is displayed on an adjacent receiver gage. A valve allows either signal to be fed into the controller. Plug-in pneumatic recorders and controllers are used, and an air switch allows the loop to be manually controlled while the controller is being replaced. Pneumatic transmitters are used in control loops affecting plant safety because an inexpensive, reliable emergency-control air system, in the event of power or compressor failure, is provided by nitrogen cylinders. The supply is adequate for an orderly shutdown.

2. A 48-v dc supply from batteries is used for control circuit power and for the operation of key pilot solenoid valves controlling air to critical valves.

3. The critical dump circuits and pilot solenoid valves may be checked during reactor operation with the aid of a special test panel. If a bona fide dump signal occurs during this test, the test signals are overriden.

The primary consideration of all sensing elements and valves which form an integral part of the reactor high- and low-pressure systems is containment. These components are either seal-welded or fitted with suitable zero-leakage closures to provide absolute containment of radioactive process fluids over extended periods. Since corrosion of sensing elements can result in calibration shifts and leaks or rupture of pressure containing parts, particular attention was devoted to the selection of materials and the design of components integrally connected to the reactor systems. Type 347 stainless steel is used for all pressure containing parts, with proper allowances being made for corrosion in specifying the minimum thickness required. Crevices are eliminated insofar as practical to prevent accelerated corrosion in regions where oxygen depletion may take place. The internal volumes of sensing elements are minimized to reduce holdup of radioactive process fluids. They are also arranged for drainage so that spread of activity is minimized during maintenance operations. Resistance to radiation damage is provided by elimination of materials subject to radiation damage or by locating the components in shielded instrument cubicles. Similarly, those components subject to damage by immersion (in water shielding used during maintenance) are located in the instrument cubicles. In a few cases where it was not possible to locate the instruments in the cubicles, they are enclosed in pressurized containers to prevent damage from immersion.

Components located outside the reactor shielded areas were selected on the basis of reliability, accuracy, and compatibility with the centralized control philosophy. While cost was a consideration, reliability and accuracy were given precedence over economy.

Pneumatic systems, using standard 3- to 15-psi transmission signals, were used where possible and practical for the following reasons:

1. Pneumatic components having proven reliability and accuracy are commercially available at relatively low cost.

2. Pneumatic control signals were required for most automatic control loops, since most control actions are performed by positioning valves with pneumatic actuators.

3. Pneumatic transmission permits the use of miniature, plug-in recorder-controller assemblies which are compatible with the graphic display designed into the control board.

4. Pneumatic components are readily operated in parallel.

In some cases, electric transmission signals were used since they were inherent in the nature of the detecting device as in the case of thermocouples and radiation detection components, or specific advantages were offered by their use for a given application. Examples of such advantages are:

1. the ability to sense motion through the walls of sealed transmitters without the use of flexible seals,
2. the ability to adjust remotely the zero reading and the span of the transmitter.

In those cases where electrical transmission signals were used and it was desired to display information on miniature recorders or where pneumatic control signals were required, the electric signals were transduced to pneumatic ones, as shown schematically in Fig. 8.1.

Two shielded cubicles are provided for certain instruments which must be located inside the containment vessel but must be protected from radiation and from immersion in water during reactor maintenance operations. The cubicles were described in chap. 4. Figure 8.2 is a photograph taken looking down into one of the cubicles showing the arrangement of instruments. By locating the instruments in these compartments, they are readily accessible for servicing during reactor shutdown periods. The cubicles are vented to the reactor off-gas stack. A safety block valve is provided in the vent line. Rupture disks isolate the cubicles from the reactor containment vessel. In the event of a pressure buildup in the cubicles, the disks rupture and vent the cubicles to the reactor containment vessel.

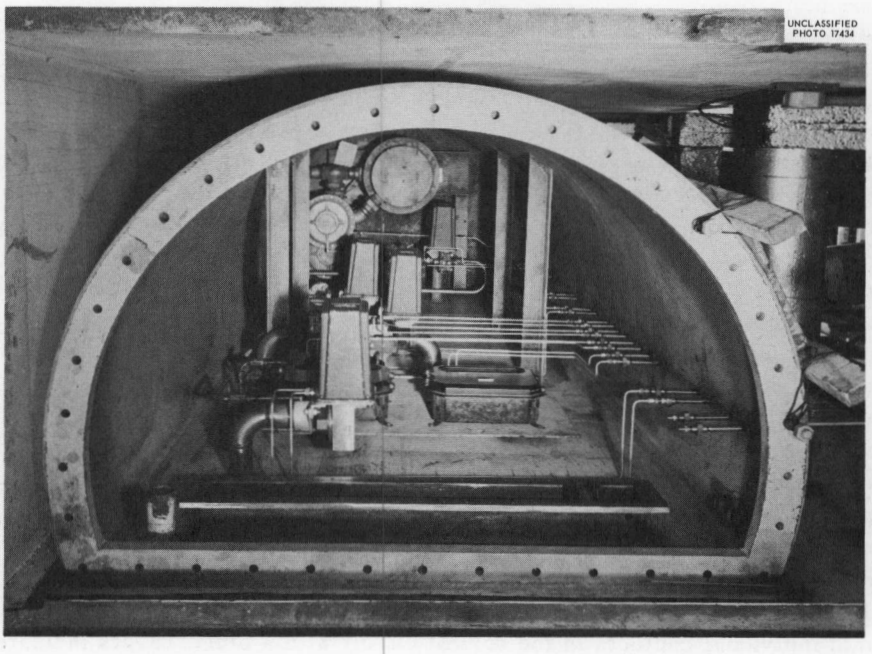

Fig. 8.2. View Looking Down into Instrument Cubicle.

Instruments located in the cubicles include the fuel pressure transmitter, fuel-blanket differential pressure transmitter, oxygen addition flow control system, heat-exchanger level transmitters, storage tank pressure transmitters, cold trap differential pressure transmitters, and reactor cell activity monitors.

Pressure and differential pressure process connections are made in the vapor space, and the connecting lines are pitched downward to the transmitters so that the lines will fill with condensate. The condensate fill improves the transient response of the measurement and reduces the amount of fission gas activity which reaches the transmitters. Signal transmission lines from the transmitters are brought through the walls of the cubicle to the auxiliary area beneath the main control room. Glass-to-metal seals similar to that shown in Fig. 8.3 are provided on electrical leads and block valves are provided on pneumatic signal lines at the point of penetration.

Instrumentation located inside the reactor cell includes thermocouples, pressurizer and storage tank level transmitters, weigh cells, high-level gamma chambers, and control valves. Seals are provided on the electrical penetrations, and block valves are included in the pneumatic transmission lines to the control valves and the weigh systems.

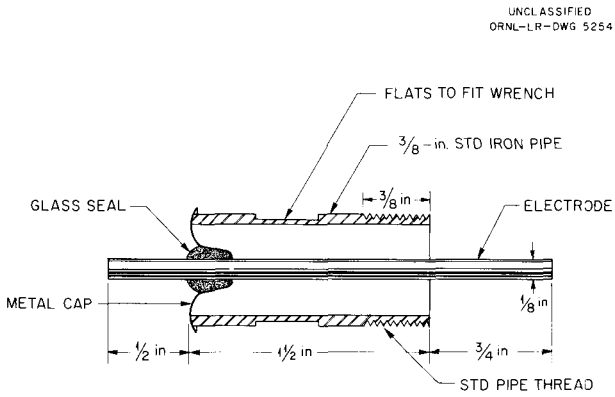

Fig. 8.3. Electrical Pressure Seal.

8.3 CONTROL-ROOM LAYOUT

The HRE-2 instrument system is designed for centralized control of the reactor, and all readout and control devices necessary for routine operation are located in the main control room. A photograph taken before the control room was fully completed is shown in Fig. 8.4. A schematic diagram of the control panel is shown in Fig. 8.5. The graphic section is essentially a simplified process flowsheet, with instruments, control switches, and valve-position indicators located in positions corresponding to their location or function in the actual system. Annunciators are placed in the control board directly above the instrument or portion of the system on the graphic board with which their signal is associated.

Important measurements are displayed on "full-scale" recorders in the center section of the panel and include fuel temperature, a multipoint temperature recorder, a multi-area radiation monitoring recorder, reactor power, logarithmic neutron level and count rate meter signals, and the blanket temperature.

The patch panel on the extreme left is a "jumper board," which is a schematic representation of the electrical control circuits. Lines representing the interconnecting wiring were not yet painted on the "jumper board" at the time the photograph was taken. Provisions are made for jumping certain individual contacts in the control circuit with a plug. Lights indicate the position – open or closed – of the contact in the system. The "jumper board" is valuable for making control circuit alterations for experiments, as an aid in familiarizing operators with the electrical

control circuitry, and, since the lights indicate contact position, as an operations aid during startup. The board was placed on the main control board so that jumpers are in full view of the operator and cannot be forgotten. Protection for sustained power operation is also offered by the removal of startup circuits from control.

Switches and controls on the console are restricted to a start and run switch, a concentrate and dilute switch, a controlled dump switch, an emergency dump switch, a turbine governor control switch, a manual controller for steam withdrawal, a manual controller for the fuel feed pump, an evacuation alarm switch, an annunicator acknowledge and reset switch, and a pile period meter.

Data collection instruments and the transducers that drive the miniature pneumatic slave recorders on the main panel are located in auxiliary instrument galleries beneath the main control room. Also located in these galleries are a 548-point thermocouple patch panel, a relay panel,[8] the nuclear amplifiers, and the nuclear instrument power supplies. Control panels for the steam system, the cooling water system, the turbine-generator set, the two sampler stations, and the refrigeration system are located near their respective equipment. Standard 2-ft wide modular cabinets and panels are used throughout to facilitate changes.[9]

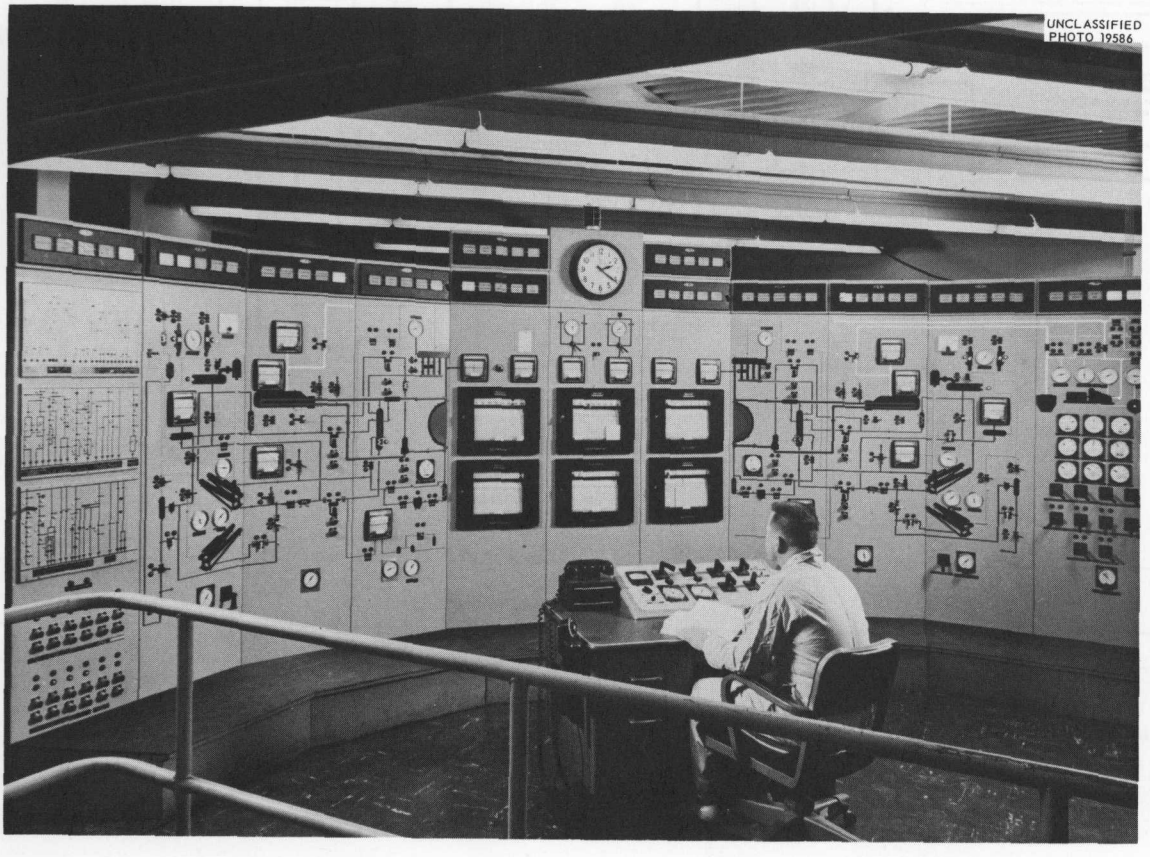

Fig. 8.4. HRT Main Control Board and Console.

UNCLASSIFIED
ORNL-LR-DWG 8422

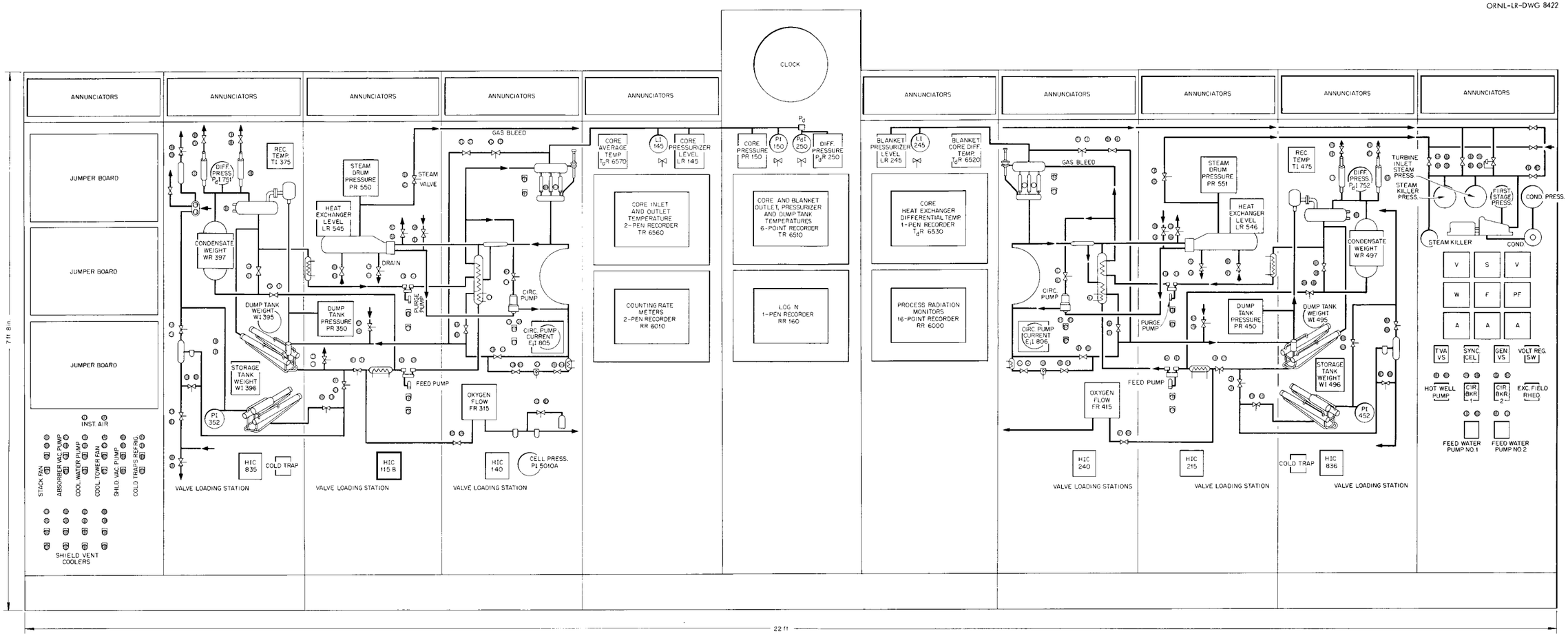

Fig. 8.5. HRT Control Panel.

8.4 NUCLEAR INSTRUMENTATION

The purpose of the nuclear instrumentation is to provide neutron-level measurements and to monitor auxiliary process lines and control areas for escaping radioactivity.

Control rods and fast responding electronic circuitry are not required in an aqueous homogeneous reactor because of the large negative temperature coefficient of reactivity. Functions similar to those performed by control rods in heterogeneous reactors, but without such exacting speed-of-response requirements, are performed by valves which control the concentration of the fuel, which vary the steam removal rate from the heat exchangers, or which allow the fuel to be discharged to noncritical, low-pressure storage tanks.

Two Westinghouse fission chambers and two ORNL-designed gamma-compensated ionization chambers are used as neutron-level transmitters.[10] The sensing elements (chambers) are located in two 3-in.-diam and two 5-in.-diam aluminum tubes, called "thimbles." These are, in turn, located in a 30-in.-diam cylinder 26 ft long, which slopes diagonally down through the biological shield, into the reactor cell, and underneath the reactor vessel as shown in Fig. 8.6. The "thimbles" are filled with water for shielding and to permit ready withdrawal or positioning of the chambers. The 30-in. cylinder is filled with lead shot and water to improve the gamma-neutron ratio at the chambers. At 5-Mw core power the thermal neutron flux is expected to be about 10^{11} neutrons cm^{-2} sec^{-1} at the chambers when they are at the bottom of the "thimbles."

Neither type of chamber requires a gas purge, and both are amenable to operation in the water-filled "thimbles." Varying the distance of the chambers from the reactor core affords a means of sensitivity adjustment, which is needed to accommodate different operating power levels. The fission chambers are required to follow the reactor neutron flux over a range of five

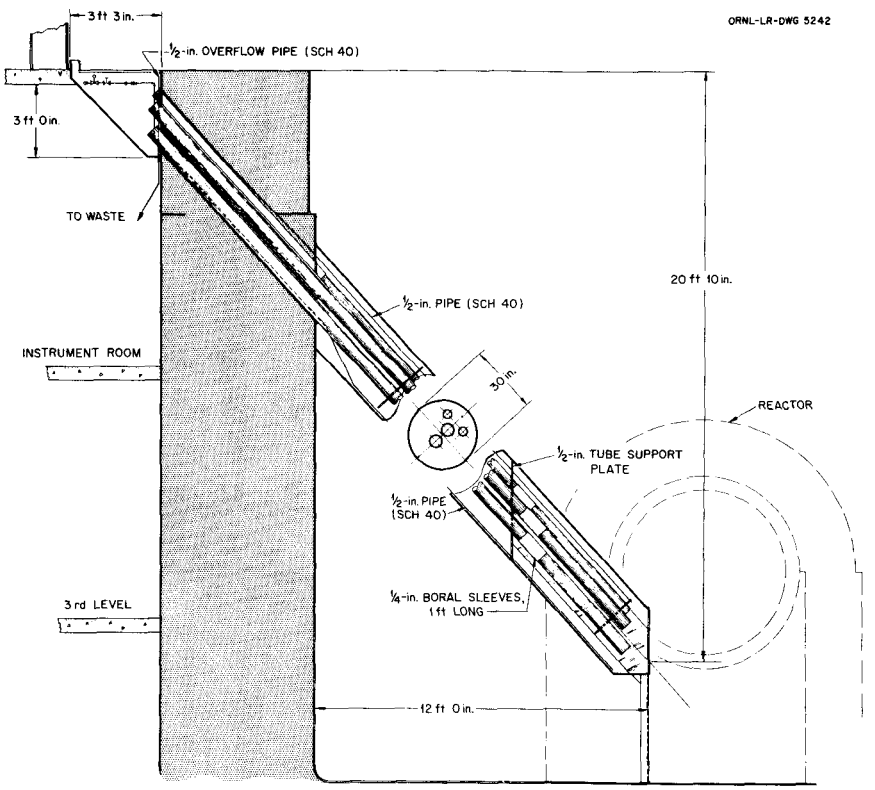

Fig. 8.6. Elevation-Instrument Tubes and Details.

decades to ensure the overlap of flux measurement with the compensated ion chambers at startup. By positioning the fission chambers in the "thimbles," the counting rate can be limited to the range of 1 to 10,000 counts/sec. For full-power operation the fission chambers are retracted into neutron shields consisting of boral sleeves as shown in the figure to limit the buildup of fission products in the chamber lining.

The gamma-compensated ionization chambers are required to be in a neutron flux of approximately 10^{10} neutrons cm^{-2} sec^{-1} at 5-Mw power level in order to utilize their wide (10^6) measuring range. The power limit of their operating range is comparable to the maximum desirable flux for proper operation of the fission chambers. With this overlapping of operating ranges, it was possible to install the two types of sensing elements in the same area of the reactor cell. Proper operation of the compensated ion chambers is assured by the lead shot and water shielding around the thimbles, which reduces the gamma background from 250,000 r/hr to about 250 r/hr.

The fission chamber signals are fed to conventional preamplifiers, A-1 linear amplifiers, logarithmic count-rate meters, and a dual pen recorder. For initial reactor startup before gamma-neutron reactions have provided a sizeable neutron source, the fission chamber output was used to drive a low-range pulse counter. One ion chamber drives a logarithmic amplifier, a neutron-level recorder on the control board, and a period meter on the console. The second chamber is a spare.

For process monitoring applications the Victoreen monitor, shown schematically in Fig. 8.7, was selected. The remote unit contains an ionization chamber with an electrometer tube sealed

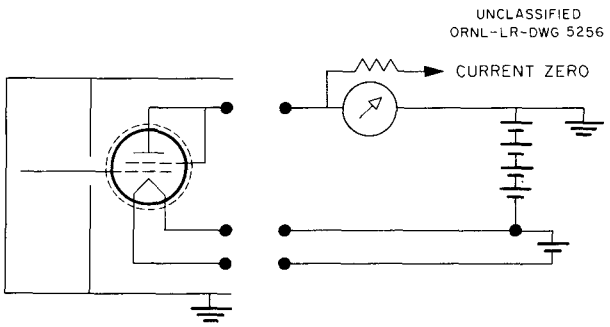

Fig. 8.7. Radiation Monitor Diagram.

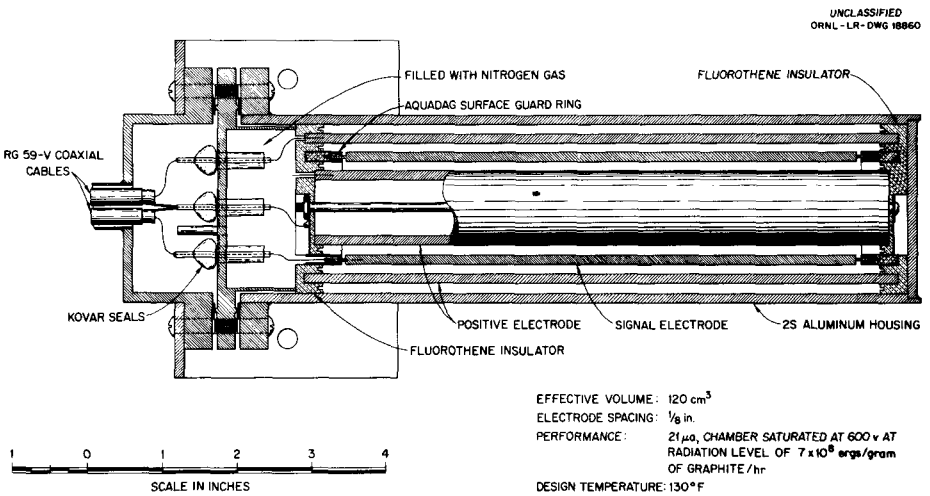

Fig. 8.8. High-Level Gamma Ionization Chamber.

inside. A remotely adjustable calibration source permits periodic calibration of the sensing element. The unit utilizes the logarithmic characteristic to cover a three decade range. Readout meters and a multipoint recorder are provided for data collection. In applications where detection of activity causes the reactor to dump, the detector units are duplicated for increased reliability. Control action is initiated only upon simultaneous signals from both channels to minimize false "scrams." However, a signal from either channel is annunciated.

A high-level gamma ionization chamber, shown schematically in Fig. 8.8, was developed to measure radiation levels inside the reactor cell at several locations. These detection devices are used to collect data to evaluate the effectiveness of shielding, to assess the rate of radiation damage to reactor components, to measure radiation levels during maintenance operations, and to provide data for future reactor designs. Tests indicated the chamber would measure levels to 10^7 r/hr and that it would be sensitive down to background radiation levels.[11] Designed to operate at 130°F, the chamber is of an inexpensive design, and units are to be discarded upon failure.

8.5 PROCESS INSTRUMENTATION

Process variables measured in HRE-2 are essentially the same as those measured in a high-temperature, high-pressure steam or chemical plant, that is, temperatures, pressures, differential pressures, flow rates, levels, and weights. In general, commercially available instruments were specified for these applications in HRE-2; however, in some cases modifications and/or new designs were required because of corrosion problems and radioactivity.[12]

Temperatures are measured with thermocouples installed by individually spot welding the couple to the outside of pipes and vessels or by the use of thermocouple wells. At each thermocouple location a spare couple is provided for use in the event trouble develops with the original couple. Couples welded to pipes are covered with asbestos tape and then several layers of fiberglass tape are applied. Waterproof thermocouples of the type shown by Fig. 8.9 are provided for thermowells in the pressurizers, transfer tanks, and recombiners. The thermocouples have 20-gage chromel-alumel leads coated with enamel and covered with silicone varnish impregnated

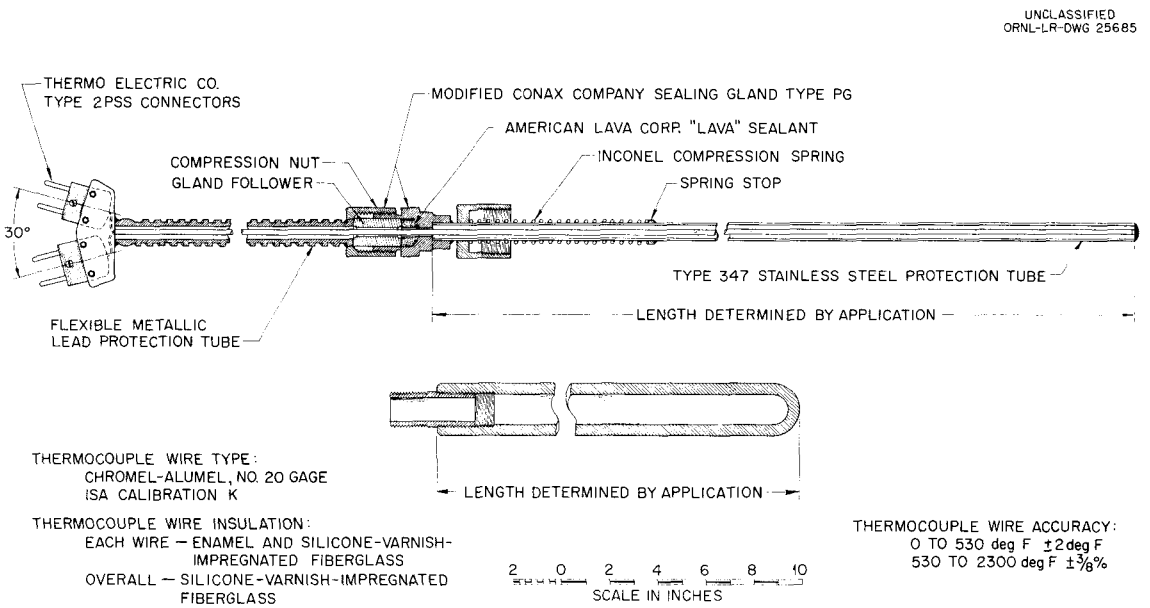

Fig. 8.9. Waterproof Thermocouple for HRT Thermowells.

fiber-glass insulation. The lead from the thermocouple goes to a quick-disconnect, of which one half is rigidly mounted. The other half can be removed with the couple. From the disconnect the leads pass through a compression-type seal, shown in Fig. 8.10, into a watertight junction box. From thence the leads pass through a pressurized conduit to a thermocouple patch panel in the control room. Figure 8.11 is a photograph of the patch panel. A complete tabulation of the thermocouples giving couple number, instrument termination, location of couple, etc., has been issued.[13]

Chromel-alumel thermocouples were used exclusively throughout the reactor system including applications where other types of thermocouples would have given better linearity or more signal output. Standardization of material permitted any thermocouple in the system to be read out on the precision temperature indicator or on the 108-point temperature scanner. Chromel-alumel material was chosen because these materials are less affected by galvanic EMF effects and oxidation, when immersed in water or operated in humid atmospheres, than other materials considered. Tests indicated that up to 10 ft of No. 22 AWG, fiberglass-insulated, chromel-alumel thermocouple wire could be immersed in water without producing excessive error.

Figure 8.12 is a weld-sealed, electric-transmission, absolute-pressure transmitter with an operating range of 0 to 300 in. of water, which is used to measure pressure in the fuel and blanket high- and low-pressure samplers. Overrange protection up to 2000 psi is provided by the convoluted diaphragm backup flange which limits the diaphragm motion. Such instruments may be overranged during sampling operations, when the contents of the high-pressure system are rapidly emptied into the sampler chamber. Specifications[5] for the instrument include a 140°F operating temperature, a 1-Mv/v output, an accuracy of 3%, a 0.007-in. diaphragm, and stainless steel type 347 material in contact with process fluid.

Figure 8.13 shows a weld-sealed electric transmitting differential pressure transmitter of similar design which is used for measurement of flow in the oxygen addition system. This transmitter and the preceding one were supplied by the Foxboro Instrument Company.

A 3- to 15-psi output, pneumatic-transmission, differential-pressure cell, used for measurement of differential pressure between the fuel and blanket high-pressure systems, is illustrated by Fig. 8.14. The cell uses a bellows sensing element and an all-welded flexure tube seal. The range is ±50 psi, with an overrange rating of ±100 psi. The unit is completely weld-sealed and is fabricated from stainless steel type 347. Additional specifications[5] are indicated in the figure.

A special pressurizer level indicator and controller is shown in Fig. 8.15. The transmitter was developed at ORNL[14–19] and consists of a 5-in.-long float or displacer suspended by two helical springs. An extension rod above the springs positions a stainless-steel-clad, Armco iron core in the center of a differential transformer. Vibration of the float is damped by the action of a magnetic field from permanent magnets on a stainless-steel-clad one-turn copper ring. Damping was required in order to prevent natural mechanical vibration of the spring-mass system composed of the displacer and spring from reaching an amplitude sufficient to impair operations of the receiving equipment or producing mechanical fatigue of the springs.

UNCLASSIFIED
ORNL-LR-DWG 5255

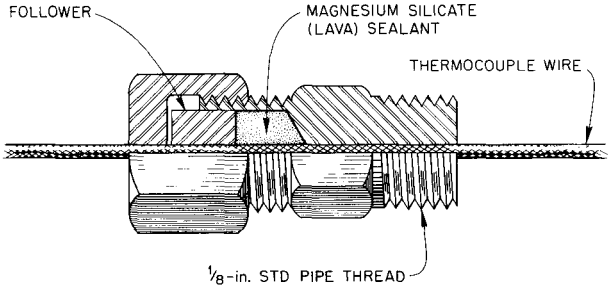

Fig. 8.10. Thermocouple Seal.

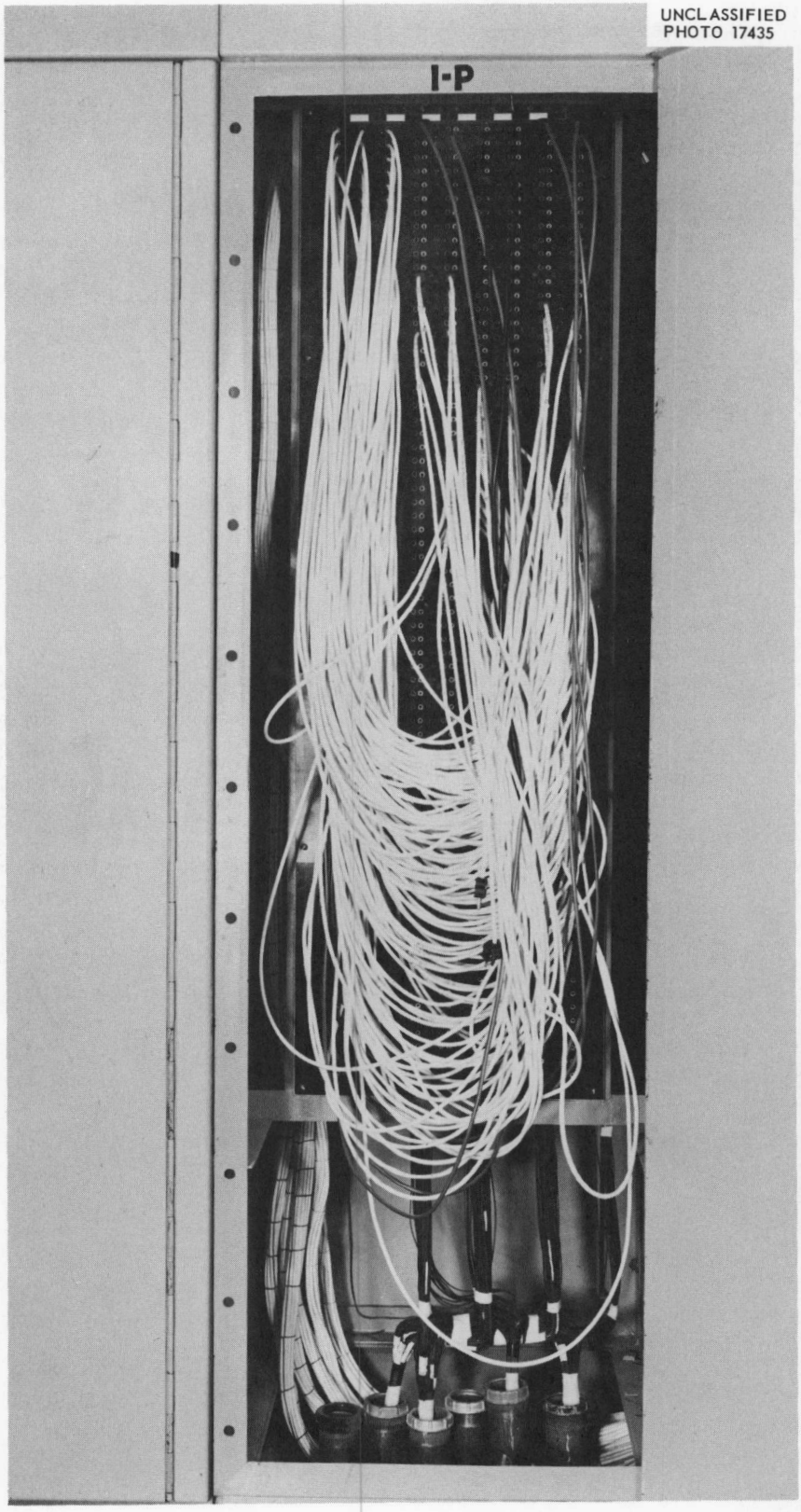

Fig. 8.11. Thermocouple "Patch Panel," in Which Some 400 Thermocouples are Terminated.

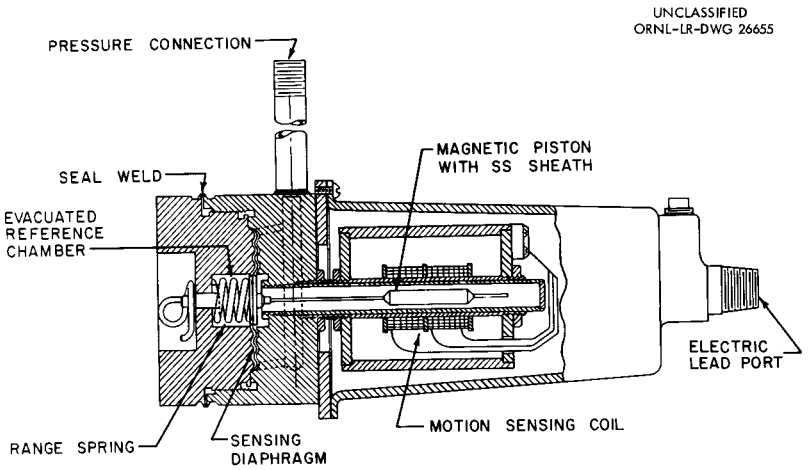

Fig. 8.12. Pressure Transmitter with a Range of 300 in. of Water.

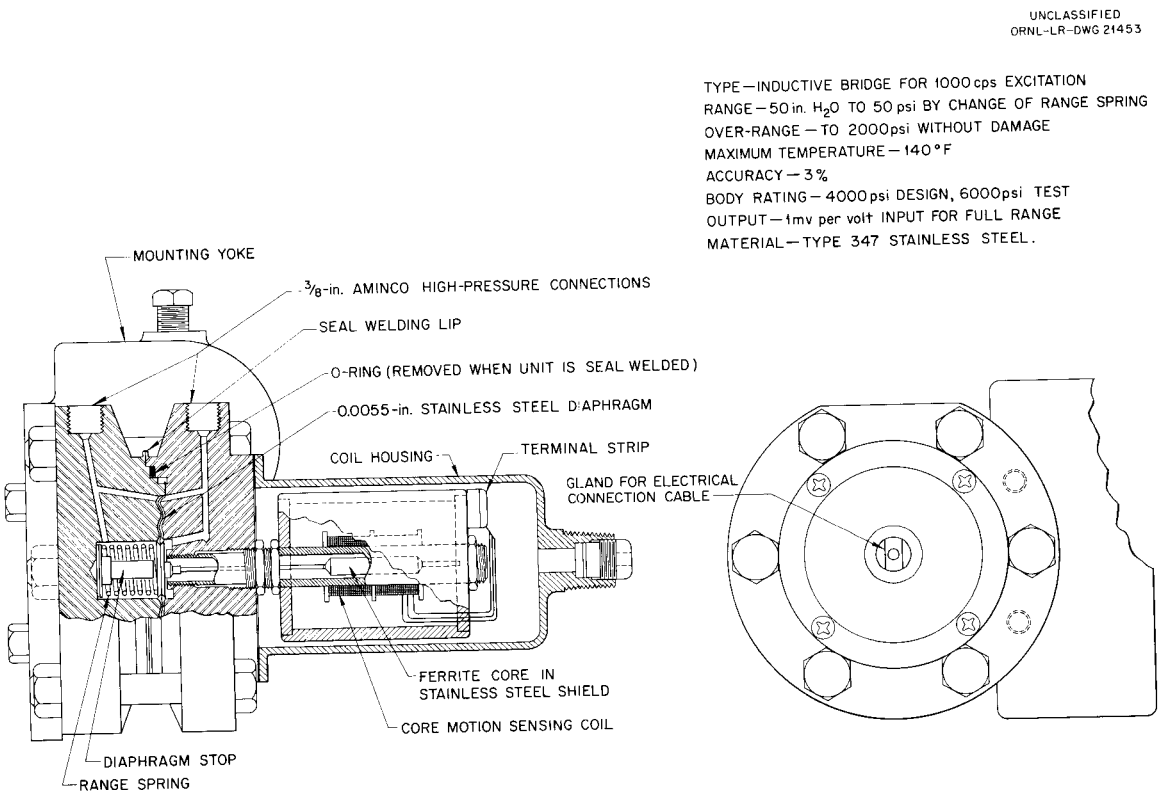

Fig. 8.13. Differential Pressure Transmitter.

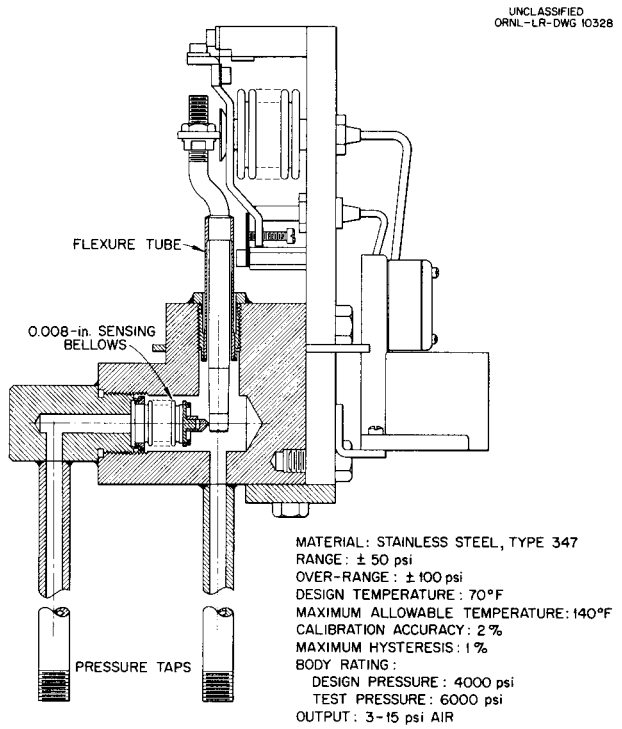

Fig. 8.14. Differential Pressure Transmitter.

The only nonwelded closure is the ASA 2500-psi ring-joint flange, which makes the unit amenable to remote replacement. Stainless steel type 347 is used for all portions of the transmitter in contact with process fluid except the Iso-Elastic alloy helical springs which are gold-plated for corrosion resistance.

The displacer suspension and motion-transmitter design does not involve torque tubes, bellows, or diaphragm motion-transmitting pressure seals, which are subject to fatigue from float vibration. An electro-mechanical transducer for converting linear motion to a proportional electrical signal is used to sense the displacer motion through the non-magnetic austenitic stainless steel pressure housing. This device is a differential transformer whose construction is such that the position of the stainless-steel-shielded ferromagnetic core determines the voltage coupled from the center primary coil to the two symmetrical secondary windings.

The transformer is designed for continuous operation at 250°C. The windings are constructed of nickel-plated, ceramic-insulated copper wire, tightly bound with fiberglass tape and string, and vacuum impregnated with silicone varnish. The transmitted signal is 0 to 20 mv/v at 1000 cps. Constant current excitation is used to reduce the effects of temperature variations on the transmitted signal.

The instrument is designed to operate at a pressure of 2500 psi at 300°C and is given a cold hydrostatic test of 3750 psig.

Transmitters of this type are used for measurement of fuel and condensate levels in the pressurizers.

Figure 8.16 shows the same type of level transmitter except that this unit has a 40-in.-long float and is damped by the interaction of two moving vanes attached to the float and a baffle attached to the housing. This transmitter is designed for the storage tanks and has a design pressure of 500 psi.

The lower spring guide construction is permissible due to the lower operating temperature and is required to prevent pendulum oscillations of the long displacer float. Hydraulic damping is used in preference to magnetic damping because of its simplicity and because the instrument is not required to read accurately when the liquid level is below the damping vanes.

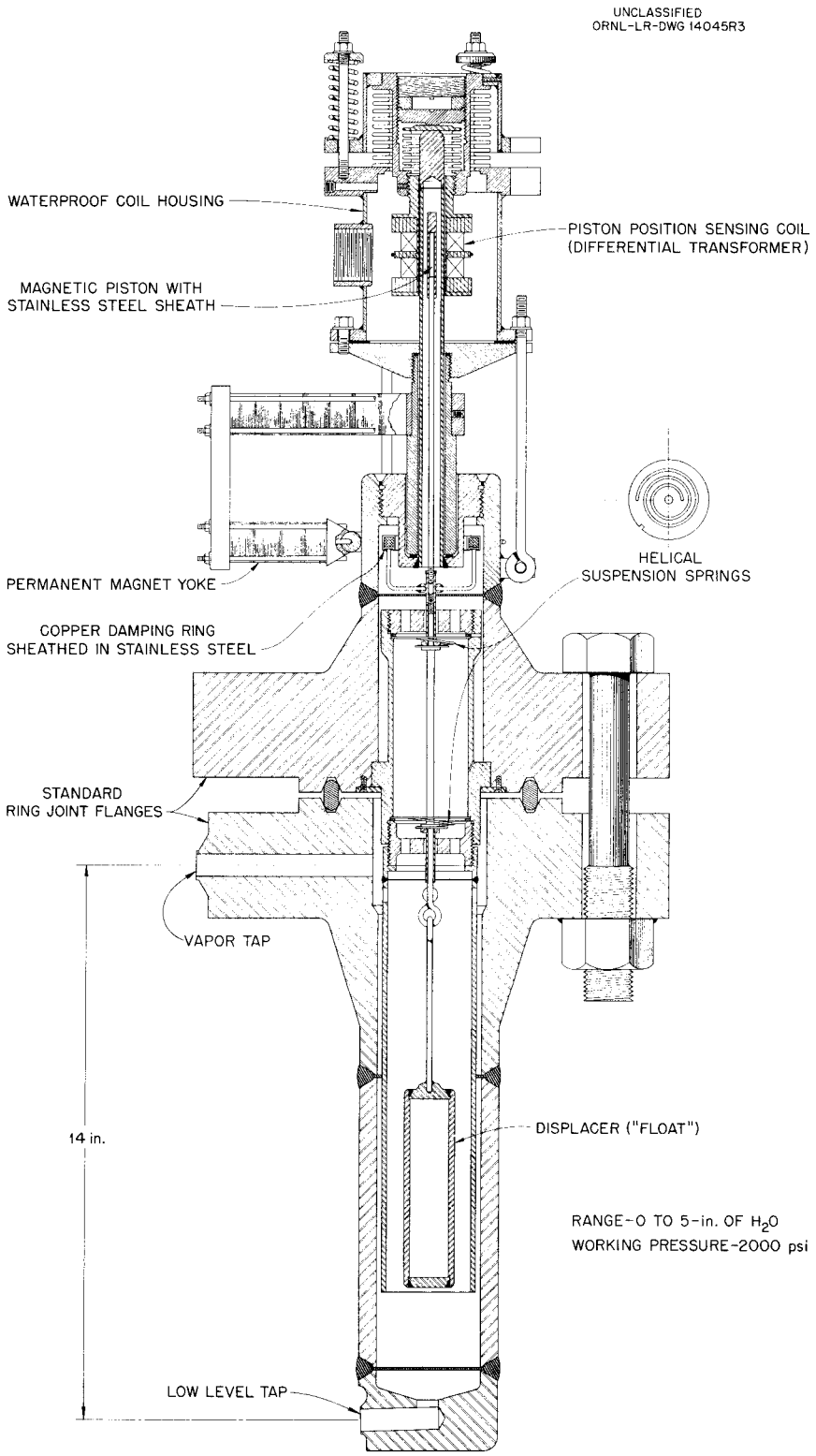

Fig. 8.15. HRT Pressurizer Level Indicator.

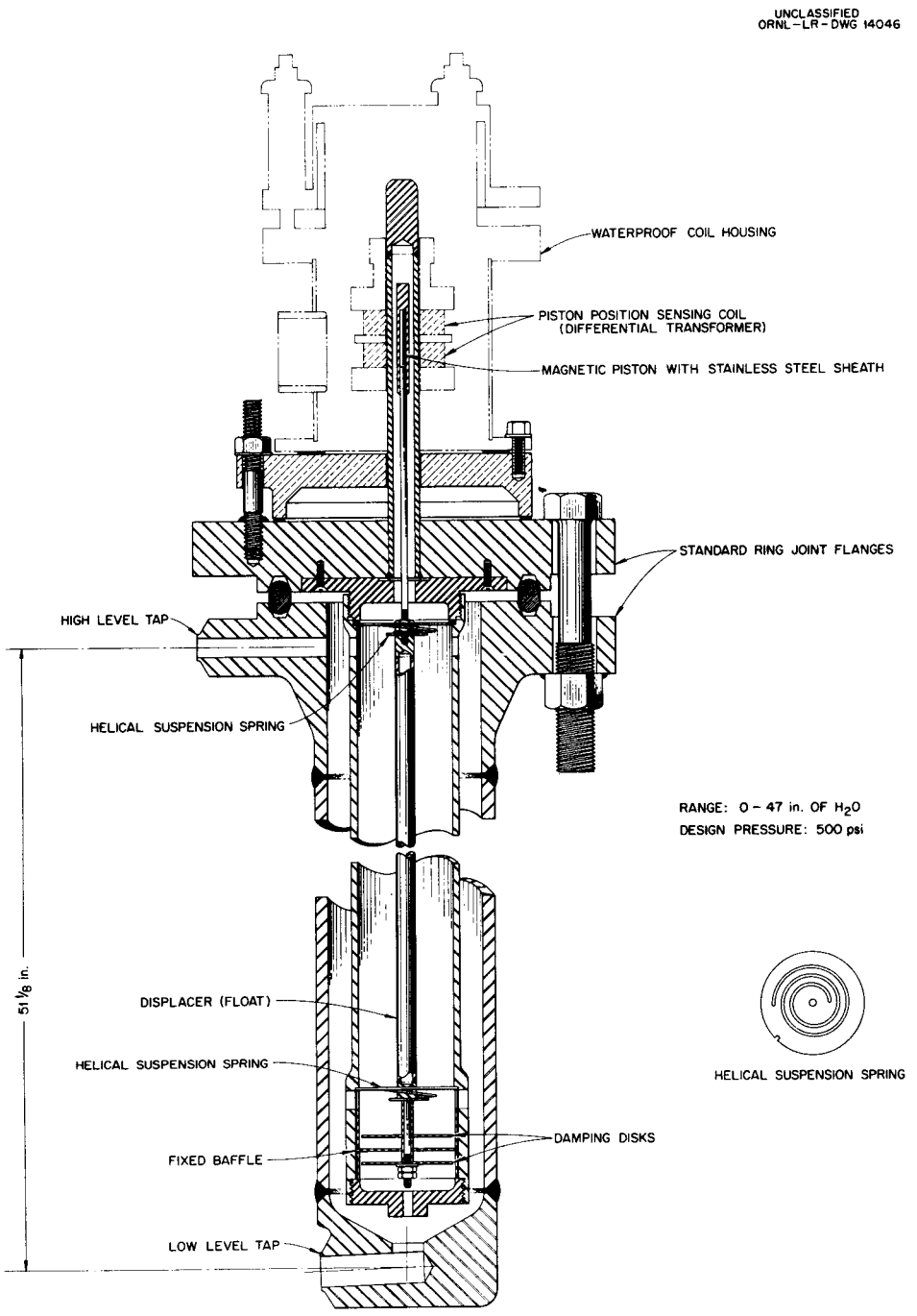

Fig. 8.16. HRT Storage Tank Level Indicator.

A float-type level indicator, utilizing a unique packless flexible shaft, is shown in Fig. 8.17. The unit is used to annunciate high liquid level in the holdup tank in the reactor low-pressure system. The tubular float shaft has a flattened center section which permits vertical float motion only. A tongue within the shaft transmits the float motion to a microswitch, which provides an on-off electrical contact. A limit stop yoke is provided to keep stresses in the shaft well within the elastic limit.

Another type of liquid level transmitter is shown in Fig. 8.18. A spherical metal float actuates a mercury contact switch through the housing extension. The all-welded, stainless steel type 347 unit is used for high- and low-level alarm purposes in sumps, storage tanks, etc.

In the fuel high-pressure system pressure is measured with bourdon-type pneumatic transmitters supplied by the Taylor Instrument Company. The only special feature of this transmitter is the material and fabrication of the bourdon tube. Figure 8.19 shows specifications and fabrication details of the bourdon tube.

Figure 8.20 shows a weld-sealed, absolute-pressure transmitter which has a range of 0 to 30 psia and which will withstand an overrange pressure of 500 psig without shift and 1000 psig without rupture. The signal output is pneumatic. The bellows serves as a vacuum seal and as a secondary pressure seal. Transmitters of this type are used to measure pressures in the fuel and blanket storage tanks, and overrange protection is required to prevent damage to the instrument during dump operation. Transmitters of similar design, but with the low pressure side of the diaphragm connected to the system instead of being evacuated and sealed, are used for measurement of differential pressure across the fuel and blanket cold traps. These transmitters are rated for maximum pressure and will withstand a 500-psi overrange on either side of the diaphragm without shift. The range is adjustable from 0–30 to 0–200 in. of water.

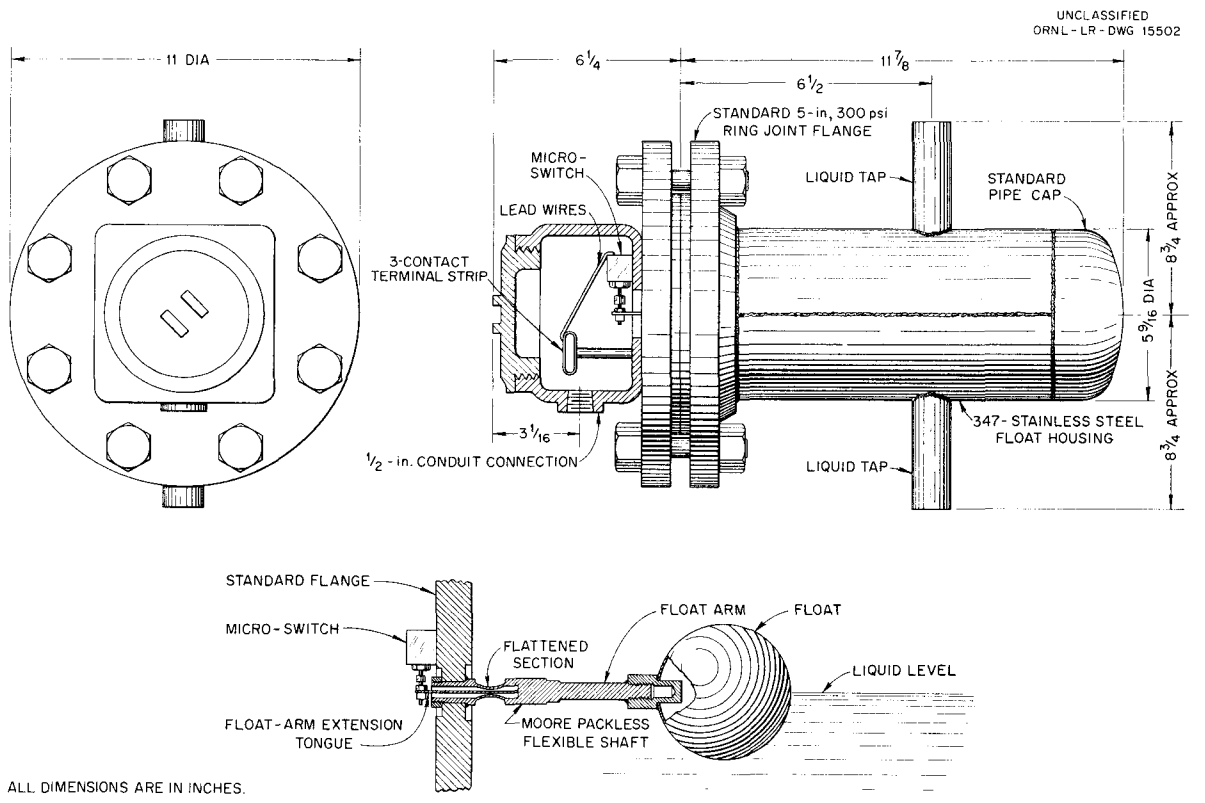

Fig. 8.17. Level Alarm Transmitter.

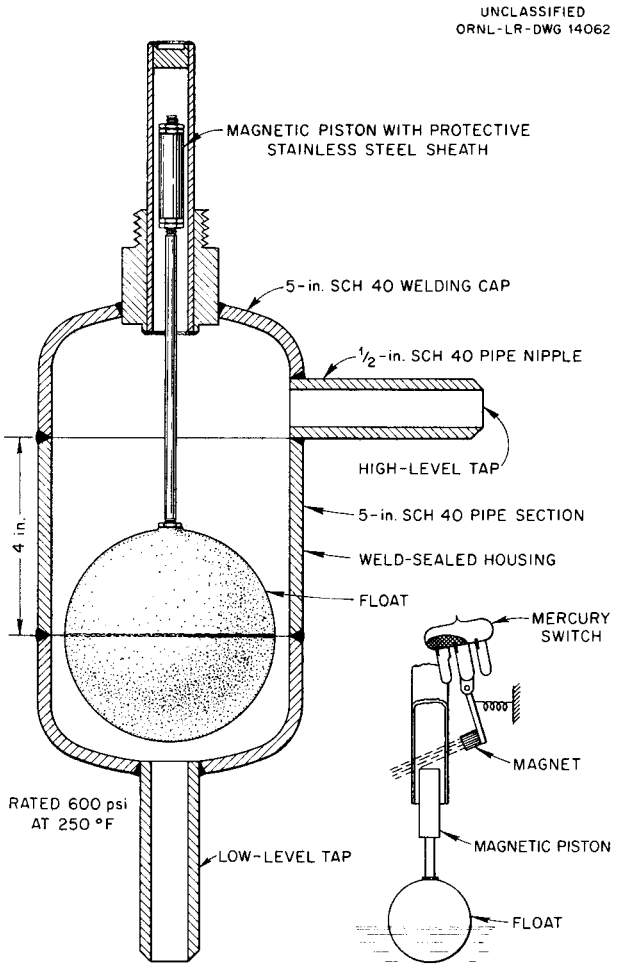

Fig. 8.18. Liquid-Level Controller.

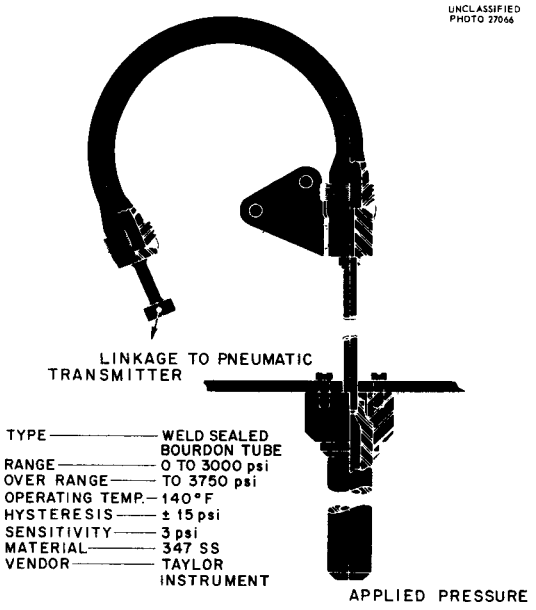

Fig. 8.19. HRT Weld-Sealed Bourdon Pressure Transmitter Element.

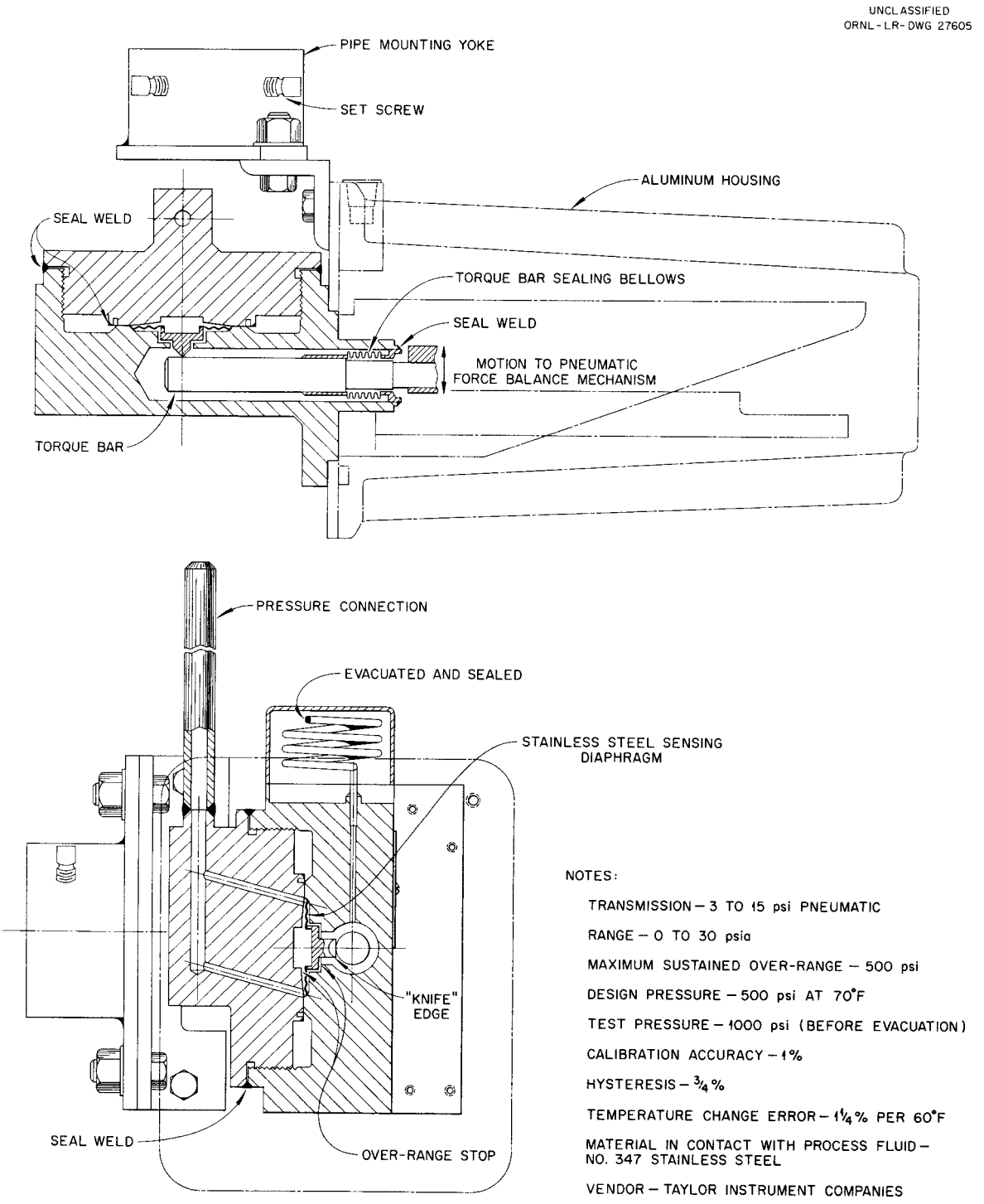

Fig. 8.20. Absolute Pressure Transmitter.

Flows in the auxiliary systems are measured by use of orifice meters or variable area rotameters. Flow of fluids in the reactor high-pressure systems is not measured directly due to the lack of a drainable flow element which is compatible with containment criteria. Pump power provides a continuous indication of flow in these systems, and heat balances during reactor operation are used to compute fuel flow. Flow in the oxygen addition system is determined by measuring the differential pressure drop produced by flow of oxygen through a capillary tube. Figure 8.21 shows the construction details of the capillary tube and differential pressure cell used for this purpose.

Detailed information on specific applications of the process instrumentation may be found in refs 4 and 5.

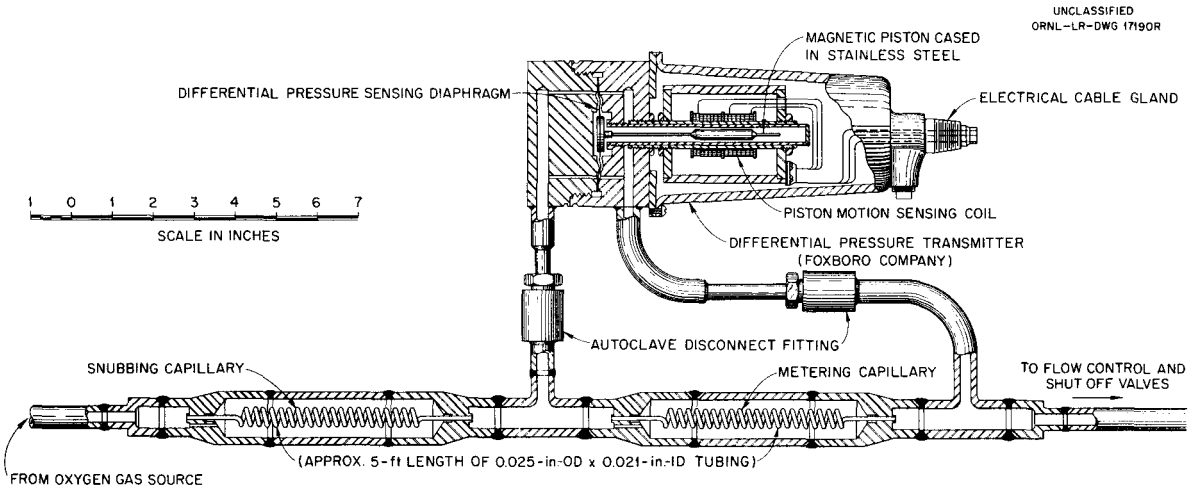

Fig. 8.21. Oxygen Flowmeter.

8.6 VALVES

Valves are key components in homogeneous reactor systems as they are the means by which process liquid and gas streams are controlled. In the HRE-2, which has no control rods, temperature and reactivity are controlled by valves which control the concentration of the fuel solution, and the power is controlled by valves which control the rate of steam removal from the heat exchangers. "Dump" valves perform an emergency scram and normal drain function by controlling the flow of fuel solution to the low-pressure storage tanks. Other valves control pressure, bleed noncondensable gases from the system, or isolate equipment. A complete line of bellows-sealed valves and actuators was developed for HRE-2 in cooperation with valve and actuator manufacturers.[20–29] A tabulation of the values giving pertinent information on each valve in the system is available.[20] Similarly, valve drawing lists have been issued.[24,26]

Pneumatic actuators are used on all remotely operated valves in the HRE-2. By the use of metallic bellows, the actuators can be of all metallic construction, and the problem of radiation damage to hydraulic fluids, elastomers, or electrical insulation is thus avoided. Since the actuator shaft also is bellows-sealed, there is no problem with leakage of the air actuating medium, and the actuator is a simple linear device which can be controlled with standard pneumatic controllers and regulators.

Figure 8.22 illustrates the letdown valve[28] used to throttle a mixture of cooled gas and liquid from the 2000-psi high-pressure system to the low-pressure storage tanks at atmospheric pressure.

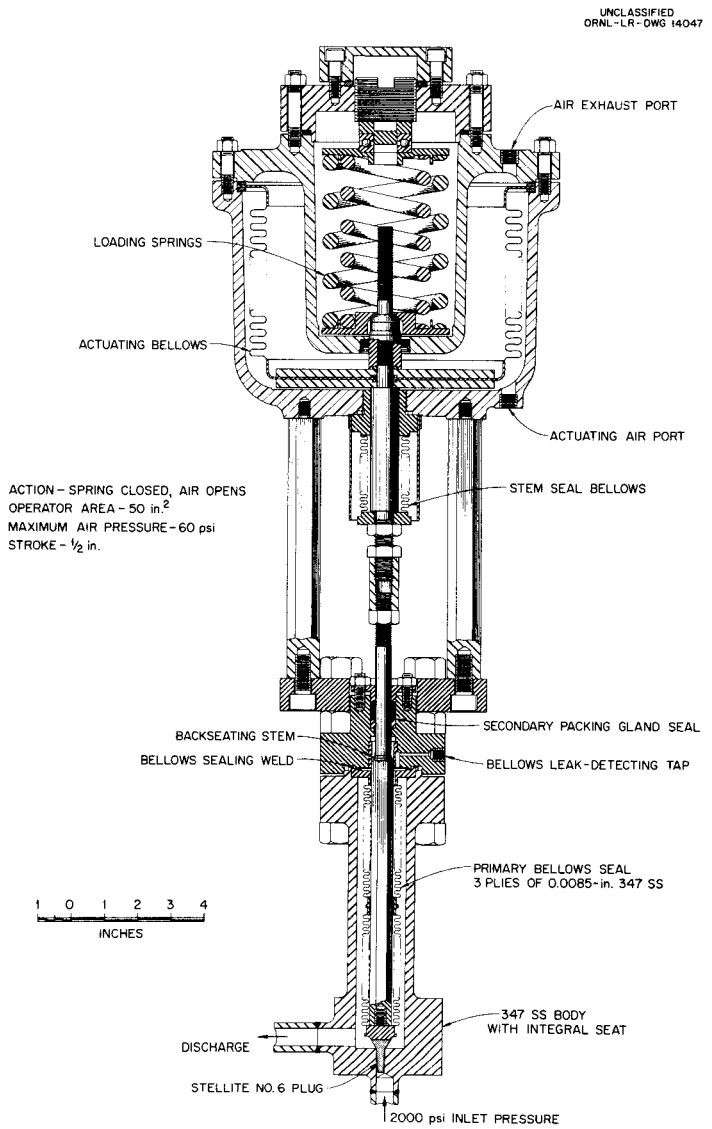

Fig. 8.22. HRT Letdown Valve and Operator Assembly.

The valve is controlled by a pneumatic signal which positions the plug in the seat to maintain a constant liquid level in the pressurizer. The flow is introduced under the seat to keep the bellows on the low-pressure side of the throttling orifice and thus under less strain. An integral seat is used to avoid the difficult problem of leakage around removable seats. As the result of development tests, earlier designs with $\frac{1}{4}$-in.-diam Stellite No. 6 plugs were replaced with $\frac{1}{8}$-in.-diam plugs fabricated from Armco 17-4 PH stainless steel, hardened to 35 to 40 on the Rockwell C scale. Although the Stellite No. 6 plugs were satisfactory for short periods, the later design using the 17-4 PH material increased the service life by an order of magnitude in the fuel stream.

The primary seal is a seamless bellows, consisting of three 0.0085-in.-thick plies of stainless steel type 347. In order to obtain the required $\frac{1}{2}$-in. stroke, two bellows sections were welded together. A hexagonal valve stem fitted into a similarly shaped guide is used to prevent a torque from being applied to the bellows. A tap between the bellows and the secondary graphited-asbestos packing gland affords a means of detecting a bellows leak, while the packing gland prevents rapid escape of process fluid from a bellows leak.

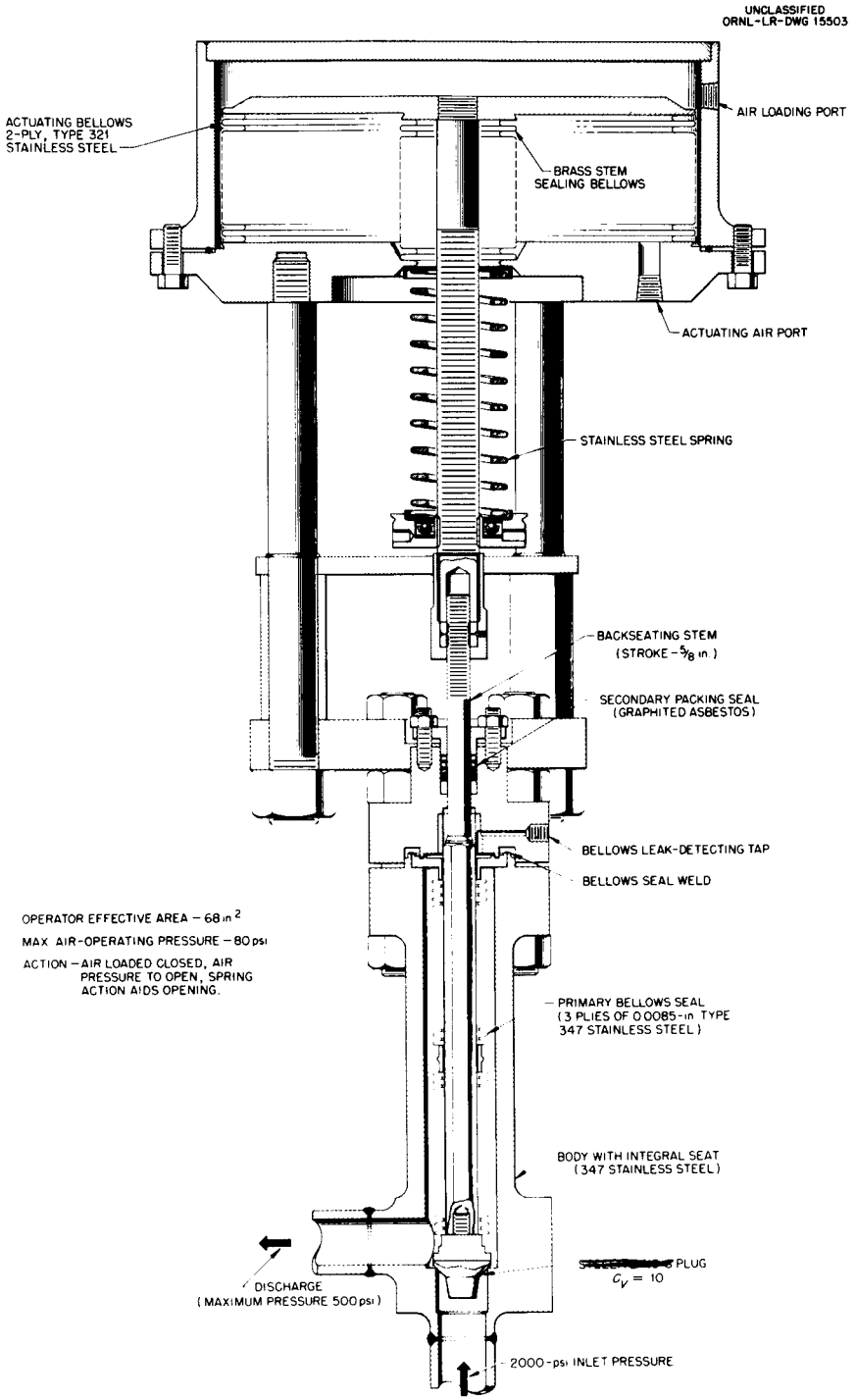

Fig. 8.23. Blanket Dump Valve and Actuator Assembly.

The valve, purchased from the Fulton Sylphon Division of Robertshaw-Fulton Controls Company according to ORNL Specification HRP-303,[30] is rated for 2500-psi service with the flow introduced under the seat; however, the downstream pressure is limited to 2000 psi by the bellows seal. The valve stroke is $\frac{1}{2}$ in. and the flow coefficient is 0.1. The reversible actuator, rated for 60-psi air operating pressure, was supplied by the Annin Company and has 42- and 48-in.^{2} effective area, respectively, when in the air-to-open and air-to-close modes. The actuator operation is reversed by a simple interchange of parts.

Figure 8.23 shows a similar but larger valve designed for on-off service. The valve stroke is $\frac{5}{8}$ in. and the flow coefficient is 13. Trim material and sealing bellows are the same as those used in the letdown valve. The operator has a two-ply stainless steel type 321 bellows with an effective area of 68 in.^{2} and is rated for 80-psi actuating air pressure. The valve action is air-loaded-closed, air-to-open, with the light spring aiding opening. Valve and operator were supplied by the Fulton Sylphon Division of Robertshaw-Fulton Controls Company.

All the high-pressure system valves are provided with short sections of pipes to which ring joint flanges are welded.[31] These flanges mate with permanently mounted pipeline flanges within the reactor cell. Jigs are available for assembling replacement valves to the same dimensions as the originals.

Figure 8.24 shows a typical low-pressure system valve without an operator. The valve is designed for 500-psi on-off service, according to ORNL Specifications HRP-302.[30] It employs a removable seat and bellows seals similar to those of the high-pressure valves. A novel feature of the valve design is the provision of integral ring joint gasket grooves for installing the valve in the system. This feature saves two flanges over the conventional method. Long bolts at the corners of the valve body clamp the valve between the companion flanges. The valve was supplied by the Fulton Sylphon Division of Robertshaw-Fulton Controls Company.

Figure 8.25 shows a small manually-operated valve utilized for sampling service. An integral seat is used to avoid leakage around the seat. The connections are coned and threaded for high-pressure tubing connectors. In high radiation zones, the valve is equipped with an extension

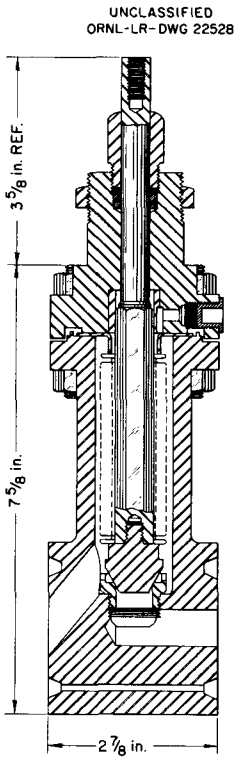

Fig. 8.24. HRT Low-Pressure Valve.

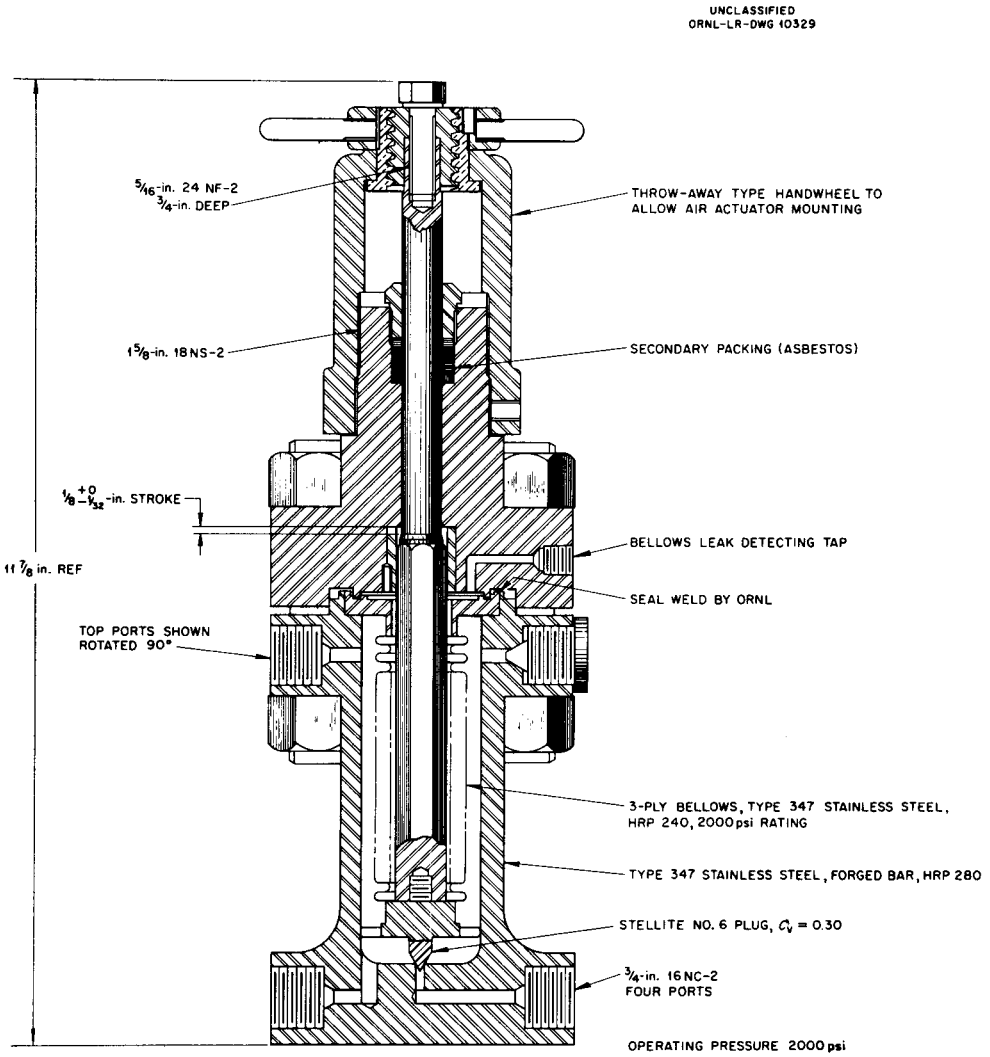

Fig. 8.25. Small Manually Operated Valve.

handle or an air actuator for remote operation. The valve was also supplied by Fulton Sylphon Division of Robertshaw-Fulton Controls Company.

Figure 8.26 shows a differential-thermal-expansion metering valve which was developed to regulate the flow of oxygen gas to the high-pressure fuel system.[32,33] The required flow is very small and is difficult to control by conventional mechanical positioning methods. The valve utilizes the difference in thermal coefficient of expansion of tantalum and stainless steel to effect flow control. Heat for actuating the valve is supplied by electrical heaters. Tantalum is used for the plug material to avoid the possibility of an ignition reaction between oxygen gas and the metal, which – for a flow of 2000 std cc/min with a 400-psi differential – is heated to about 330°C. The design incorporates all-welded construction and is enclosed in a waterproof protective housing. The resistance heating element and thermocouple are duplicated to ensure continuity of service.

A soft-seated, tongue-and-groove, on-off valve is provided in conjunction with the thermal regulating valve to ensure positive shutoff of the oxygen gas flow. The valve, shown in Fig. 8.27, employs an inlaid gold washer as the seat material. Otherwise the valve is essentially the same as the other high-pressure valves.

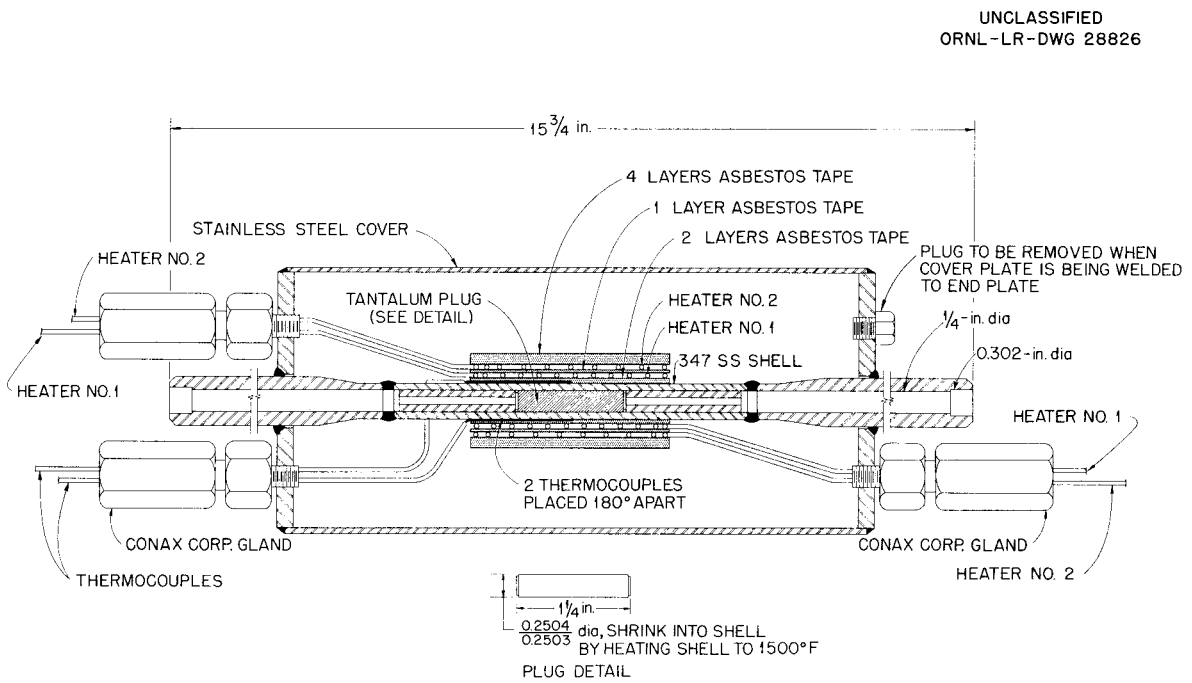

Fig. 8.26. Differential-Expansion Type of Gas Metering Valve.

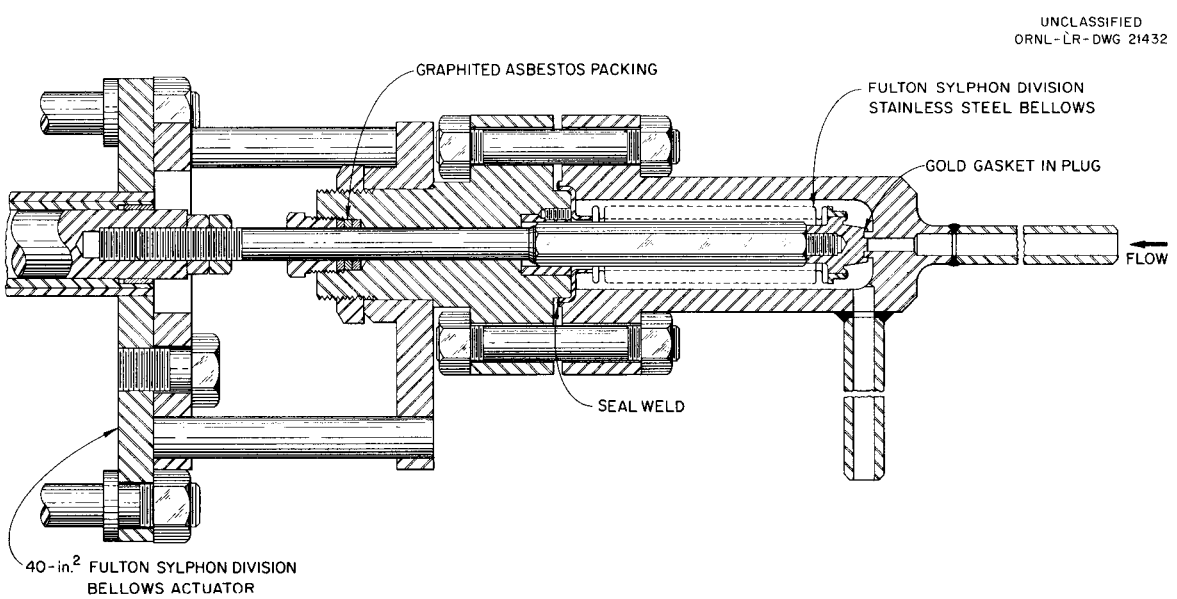

Fig. 8.27. Oxygen Shutoff Valve.

8.7 INVENTORY MEASUREMENT

A weigh system utilizing pneumatic weigh cells was developed as the only feasible method of measuring the quantity of liquid in the long, horizontal dump tanks of HRE-2. The system, shown schematically in Fig. 8.28, was selected primarily because taring can be done remotely with balancing air pressures and the components are not susceptible to radiation damage. The pneumatic load cells have an accuracy of ½%; however, when used in a system with solid pipe connections to the weighed vessels, an accuracy of about 1% results under quiesent conditions.

The mechanical design of the weigh system was described in connection with the low-pressure unit assemblies (see Sec 3.9). The system is capable of high accuracy under varying ambient pressure conditions and is unaffected by radiation or by submersion in water. For precise measurements the pressure is measured by mercury manometers as indicated in Fig. 8.28. A detailed description of the unit is available.[34]

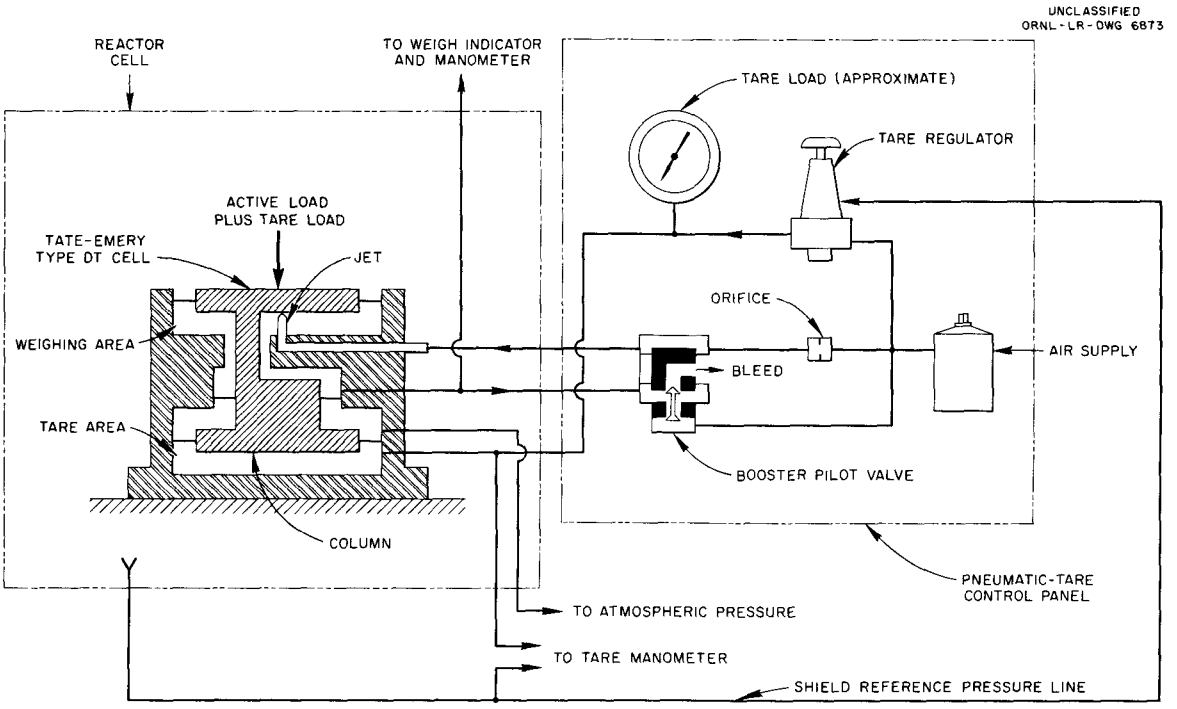

Fig. 8.28. Pneumatic Weigh System.

8.8 CONTROLS AND INTERLOCKS

The basic design and philosophy of the HRE-2 control circuitry have been reported in detail.[35] Numerous revisions and additions were added to improve reliability and safety of the system.[36–50] A tabulation of the control relay and circuits[51] and a tabulation of the control loop supply lines[52] have been reported. Current information on circuits, interlocks, and circuit functions are reported in detail in the HRE-2 Operator's Manual[6] and are shown in the process flowsheets (see chap. 2).

The design of the control circuit was influenced by the desire to provide safety in operation and, at the same time, eliminate shutdowns from such extraneous causes as instrument failure, TVA power loss and line surges, solenoid failures, and inadvertent operation of instrument interlocks by operating personnel.[35] An effort was also made to block out startup interlocks, which

might cause shutdown after they have performed their function. To minimize shutdowns from instrument or solenoid failure, contacts and solenoids are duplicated in key control circuits, and simultaneous operation of two instruments or components is required to actuate the circuit.

A 48-v dc supply is used for relay and solenoid operation. This voltage is obtained from a battery supply, which is charged by a rectifier from the 115-v ac control circuit bus. The use of a dc circuit permits better relay operations and allows the use of fail-safe circuitry without the attendant condition of having relays dropout and valves operate when ac power is lost. Motor contactor circuits are supplied from the ac control circuit bus, since there is no advantage gained from dc operation, and since contact arcing is less severe on ac circuits.

Figure 8.29 shows two typical key control loops: (1) the pressure of the core system is controlled from the sensed pressure by proportioning the power to the pressurizer electric heaters; the blanket pressure is similarly controlled by a core-to-blanket differential pressure signal, and (2) the liquid level in the pressurizer is controlled from sensed level by pneumatic control of the letdown valve.

Electric control actions from the signals from pneumatic transmitters and transducers are derived from pressure switches. Electric interlock control of the pneumatic signals to final control elements is achieved by the use of solenoid-actuated pilot valves.

Other key control loops not shown in the figure are the following:

1. The reactor power is controlled by a manual or turbine governor signal to a valve throttling steam from the core heat exchanger. Because of the large negative temperature coefficient and the low heat capacity, the reactor can produce more heat than is being removed for only a very short time. Heat is removed by opening the steam throttling valve, which causes a decrease in the temperature of the fuel leaving the heat exchanger. Because of the negative temperature coefficient, the cooler fluid entering the core causes an increase in reactivity and the fuel is heated until it overcomes the excess reactivity.

2. The nuclear average temperature of the core system is controlled by varying the concentration of the fuel solution. The core inlet and outlet temperatures will vary with the power extraction, while the nuclear average temperature is a function only of fuel concentration.

3. The blanket temperature is controlled by a signal, derived from the difference in average core and blanket temperature, which operates the steam valve of the blanket heat exchanger.

These and other control loops and circuits are fully described in the literature.[6,35–52]

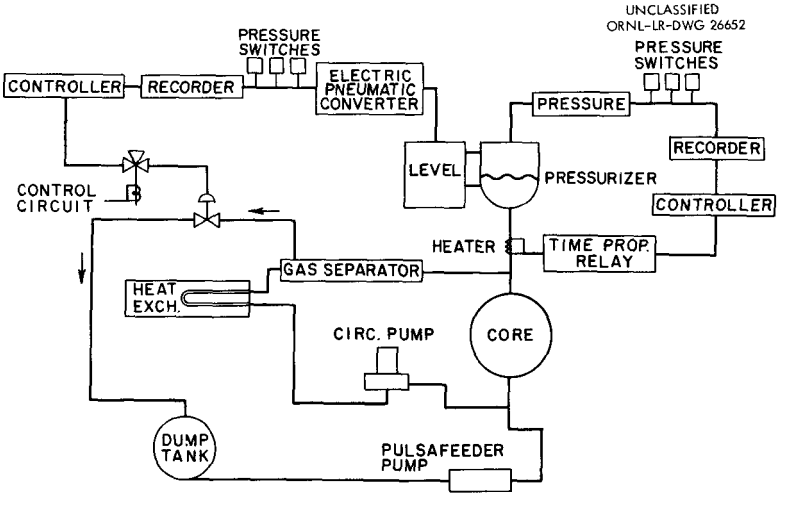

Fig. 8.29. Key Control Loops Utilizing Both Pneumatic and Electric Transmission.

Extensive protective interlocking of the control circuits is provided to prevent unsafe operating conditions. However, flexibility of operation is provided by the jumper-board on the control panel to facilitate special operating conditions.

Examples of interlocked systems include the following:

1. The pumping-up of fuel to the reactor core instead of condensate is prevented by several interlocks which keep the fuel addition valve closed until the core is full of condensate and has been heated to 200°C. This prevents power (and consequent pressure) surges.

2. To avoid excessive thermal stresses, the control circuitry does not permit the pumping of cold feedwater into the heat exchangers until the level is above 50%.

3. To give smooth startup, the fuel injection pump can only run at half speed until a temperature of 240°C is reached.

4. The fuel feed valves are closed and the concentration in the fuel system is lowered by injecting condensate if the core outlet temperature becomes excessive, if the circulating pump stops, or if the power level exceeds normal.

5. The contents of the high-pressure systems are automatically emptied to the low-pressure storage tanks through the dump valves on a signal of extremely high pressure, or a radiation leak into the steam system. Differential pressure control between the core and blanket systems during this dump is by on-off control of valves from a differential pressure signal.

Details of these and other interlocks are available in the Operator's Manual[6] and in other references.[35–52]

8.9 ELECTRICAL SYSTEM

Ordinary electrical equipment and wiring methods were utilized for the portions of the electrical distribution system outside of the reactor containment vessel.[53] The portion inside the containment vessel required additional consideration to overcome the effects of radiation, periodic submersion in water, ambient conditions of temperature and pressure, and methods of maintenance.[54]

A simplified diagram of the electrical load distribution[55] is shown by Fig. 8.30. A summary of the installed capacity is given in Table 8.1 and detailed breakdowns are reported in Tables 8.2–8.4.

Starting from the 13.8-kv overhead line to the site, a single-pole substation was made to feed three, single-phase, 167-kva transformers, delta-delta connected, 13.8 kv to 460 v, 60 cycles. Fuses on the one-pole substation were chosen to blow only in the event of trouble in the transformers and/or underground duct run to the 800-amp circuit breaker.

The essential electrical circuits are tied to a main cross bus, connected between circuit breakers on the two power sources (TVA power and power generated at the site). In this manner the load can be carried by either source alone or jointly when both are synchronized and available.

Detailed descriptions of the electrical distribution system may be found in the Operator's Manual[6] and in refs 53–55.

The power wiring system inside the reactor containment vessel required special design considerations to permit periodic submersion of the entire system during maintenance operations.[54] Conventional wiring and pressurized conduit and junction boxes were found to be unsatisfactory because leaks exposed the hygroscopic radiation-resistant wire insulation to moisture which caused a severe reduction in insulation resistance. As a result, the power wiring was replaced with metal-clad, mineral-insulated cables with hermetically sealed end caps as shown in Fig. 8.31. Compression fittings of the type shown in the figure were used to seal the cables to bulkheads and the containment vessel.

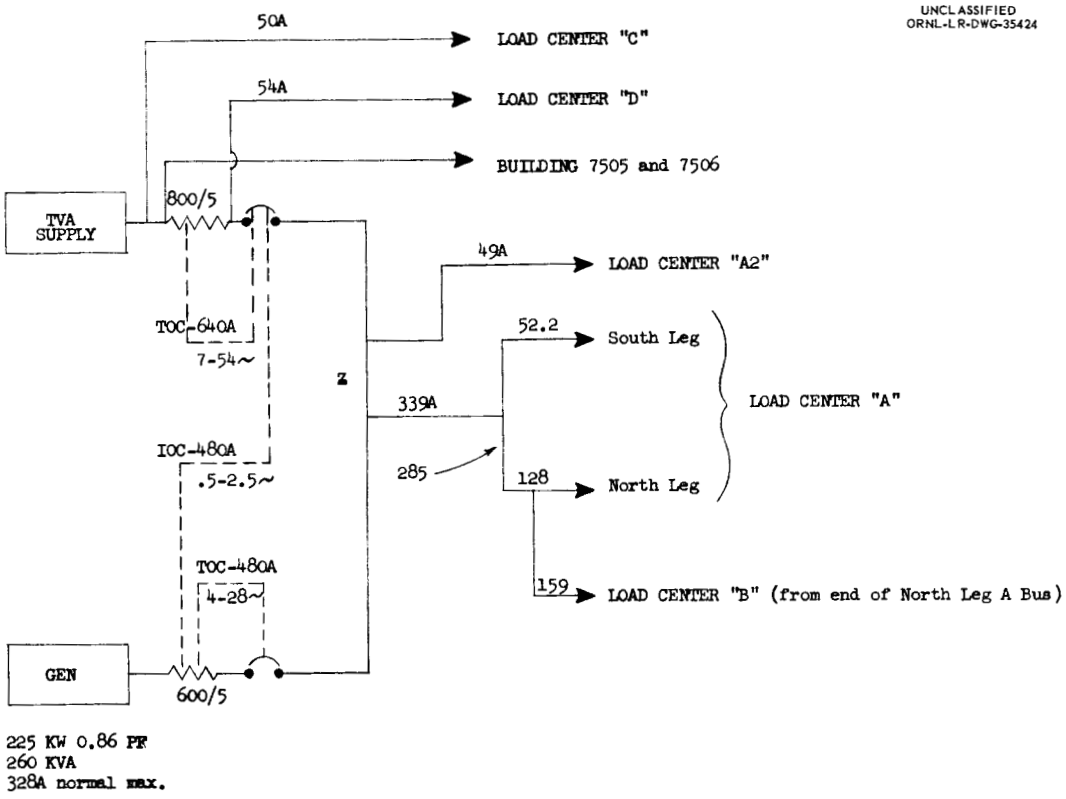

Fig. 8.30. Simplified Diagram of the HRE-2 Electrical Load Distribution.

Table 8.1. Electrical Distribution and Load Center Summary

Component	Voltage	Installed Capacity (amps)	Installed Load (amps)	Installed Load (kva)	Effective (kva)
Supply line	460	800			
Generator breaker	460	600			
Generator	460	282			
Tower shield pump			20	15.9	15.9
Power and lights	460				
Bldg. 7505			24 av	19.1	19.1
Bldg. 7506			20 av	15.9	15.9
Load center A	460	380	464.7	367.2	182.8
Load center B	460	255	219.6	158.2	125.3
Load center C	460	125	50	39.8	39.8
Load center D	460	150	196.5	150.7	43.4
		Total Plant Load	892.2	727.0	442.2

Table 8.2. Load Center A

Disconnect and Service	Installed (hp)	Installed (amps)	Installed (kva)	Demand Factor	Effective (kva)
A-1 Cooling-tower pump 1	30	38	30.3	0.5	15.1
A-2 Turbine oil pump	1.5	3.15	2.5	1.0	2.5
A-3 Hot well pump	1.5	2.3	1.8	1.0	1.8
A-5 Boiler feed pump 1	25	31.5	25.0	0.1	2.5
A-7 Air compressor 1	20	24.8	19.8	1.0	2.0
A-9 Steam pit exhaust fan	2	3.75	3.00	1.0	3.0
A-11 Boiler feed pump 2	50	77.6	61.9	1.0	61.9
A-12 Adsorber vacuum pump	0.5	0.9	0.7	1.0	0.7
A-13 Cooling-tower fan	20	25.5	20.4	1.0	20.4
A-14 Condensate pump	5	7.0	5.58	1.0	5.6
A-15 Stack fan	3	4.5	3.59	1.0	3.6
A-17 Air-cooled condenser	25	32	25.5	1.0	25.5
A-18 Load center B main					
A-21a Sub bus 21					
A-21b Sump pump	3	4.5	3.59	0.1	0.4
A-21c 1st Level air condtr.		17	13.6	0.1	1.4
A-21d 2d Level air condtr.		8.2 (220v)	3.27	0.3	1.0
A-22 Air compressor 3	40	49	39.1	0.2	7.8
A-23 Air compressor 3					
A-25					
A-27A Inst. air drier 1		1.25	1.0	1.0	1.0
A-27B Inst. air drier 1					
A-29 Cooling-tower pump 2	30	17.5	13.9	0.5	7.0
A-30 Demin. C. W. 1	15	8.97	7.15	0.5	3.6
A-31 Demin. C. W. 2	15	8.97	7.15	0.5	3.6
A-33 Welding receptacles		92.0	73.4	0.1	7.4
A-34 Exhaust fan 1st level	2	1.52	1.21	1.0	1.2
A-35 Feedwater chem treatment		1.03	0.82	1.0	0.8
A-36					
A-37					
A-38 Inst. air drier 3		3.76	3.0	1.0	3.0
		464.7	367.2		182.8

Table 8.3. Load Center B

Disconnect and Service	Installed (hp)	Installed (amps)	Installed (kw)	Demand Factor	Effective (kva)
B1 Fuel circulating pump	1.5	24	19.2	1	19.2
B2 Fuel circulating pump purge pump	0.5	1.3	0.8	1	0.8
B3 Fuel feed pump	7.5	10	7.98	1	8.0
B4 Fuel pressurizer heater		30.5	24.3	1	24.3
B5 Blanket pressurizer heater		30.5	24.3	1	24.3
B6 Blanket feed pump	7.5	10	7.98	1	8.0
B7 Blanket circulating pump purge pump	0.5	1.3	1.04	1	1.0
B8 Blanket circulating pump	15	24	19.3	1	19.3
B9 Shield vent cooler 1	1.5	5.6	2.23	1	2.2
B10 Shield vacuum pump	10	13	10.4	0.2	2.1
B11 Shield vent cooler 2	1.5	5.6	2.23	1	2.2
B12 Shield vent cooler 3	1.5	5.6	2.23	1	2.2
B13 Shield vent cooler 4	1.5	5.6	2.23	1	2.2
B14 Cold pump	5	6.75	5.38	1	5.4
B15 Hot pump	1.5	2.35	1.87	1	1.8
B16 Refrigeration comp.	25	34.5	27.5	0.4	6.9
B17 Control battery charger	5	6.6	5.26	1	5.3
B18 Light panels, nuclear panels, etc.		20	8.0	0.5	4.0
B19 Fuel pressurizer purge pump	3	4.2	3.35	1	3.4
B20 Blanket pressurizer purge pump	3	4.2	3.35	1	3.4
B21 Stator test		4.5	3.59	1	3.6
		250.1	182.52		149.6

Table 8.4. Load Center D

Disconnect and Service	Installed (hp)	Installed (amps)	Installed (kw)	Demand Factor	Effective (kva)
D-4 Bridge crane		20, 8.1, 12.5	32.3	0.1	3.2
D-6 Light panel A				0.5	
Inst. air drier 2 (D-26)		1.25	1.0	1.0	1.0
Outside heat tracing (D-32)		10	2.0	0.1	0.2
D-8 Spare					
D-10 Package boiler	7.5	10.3	8.2	0.1	0.8
D-16 Welding receptacles		92.0	73.4	0.1	7.3
Storage pit hoist	1.5	4	3.19	0.1	0.3
D-19 Inst. air comp. 2	20	24.8	19.8	1.0	19.8
D-20 Vent fans bay, C.R.	11	13.6	10.85	1.0	10.8
D-28 Spare					
		196.5	150.7		43.4

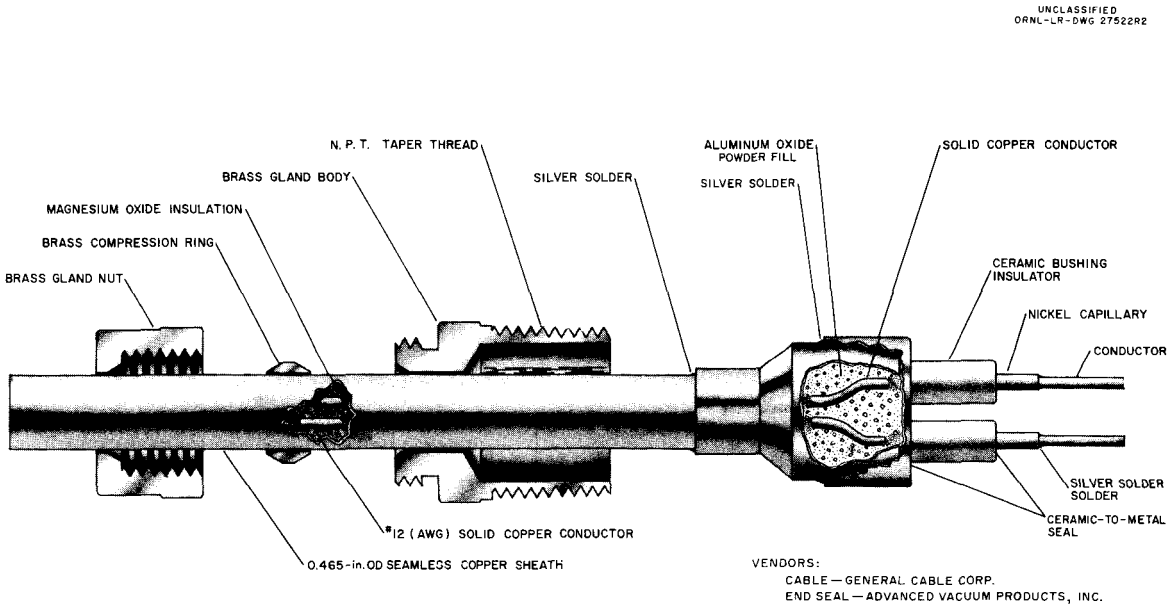

Fig. 8.31. Mineral-Insulated Cable and Associated Compression Attached Fitting and Hermetic End-Seal.

REFERENCES

1. D. S. Toomb, Jr., "Instrumentation and Controls for the Homogeneous Reactor Test," paper 56-13-3 in *Proceedings of the Instrument Society of America 11th Annual Instrumentation Automation Conference and Exhibit, September 17–21, 1956, New York.*
2. R. K. Adams, *HRT-CP Instrumentation Design Manual*, ORNL CF-56-8-117 (Aug. 17, 1956).
3. C. S. Lisser, *Instrumentation Design Report for the HRT Core Processing Plant*, ORNL CF-57-10-131 (Oct. 15, 1957).
4. R. L. Moore, *HRE-2 Instrumentation Tabulation*, ORNL CF-57-2-166 (Feb. 1, 1957).
5. R. L. Moore, *HRE-2 Instrumentation Specifications*, ORNL CF-55-10-162 (Oct. 7, 1955).
6. J. W. Hill, *HRT Operator's Manual, Vol I, II, and III*, ORNL CF-58-6-142 (June 9, 1958).
7. W. P. Walker, *Instrument Design Criteria*, ORNL CF-54-10-173 (Oct. 12, 1954).
8. R. L. Moore, *Revisions – HRT Relay Terminal Wiring, Dwg. E-21026*, ORNL CF-56-4-180 (Apr. 26, 1956).
9. D. S. Toomb, *Estimated HRT Instrument Cabinet Costs*, ORNL CF-56-6-54 and Addendum June 8, 1956, and August 8, 1956.
10. J. N. Baird, *HRT Nuclear Instrumentation Proposal*, ORNL CF-54-7-202, (July 29, 1954).
11. D. S. Toomb *et al.*, *HRP Quart. Progr. Rept. Jan. 31, 1957*, ORNL-2272, pp 34–36.
12. R. L. Moore, *Instrument Transmitters for High-Pressure, Aqueous, Nuclear Reactors*, ORNL CF-58-10-106 (Oct. 28, 1958); also published in *Proc. of Nuclear Process and Controls Conference*, ORNL-2695.
13. J. D. Grimes, *HRT Temperature Measurement Systems, Issue No. 4*, ORNL CF-57-1-159 (Jan. 17, 1958).
14. R. L. Moore, *HRT Level Controller Development and Status Report*, ORNL CF-56-4-61 (Apr. 24, 1956).
15. C. L. Segaser, *Design Study – HRT Pressurizer Level Float*, ORNL CF-56-8-102 (Aug. 8, 1956).
16. R. F. Hughes, *Fluid Motion in "U" Tubes of Variable Cross Section (HRT Level Indicators)*, ORNL CF-56-10-23 (Oct. 2, 1956).
17. R. F. Hughes, *Effect of Gas Sampling on the HRT Level Control*, ORNL CF-56-10-50 (Oct. 15, 1956).
18. R. Gelman and C. S. Robertson, Jr., *Frequency Response Analysis of HRT Mockup Pressurizer-Level Controller Loop*, KT-240 (EPS-X-272) (Oct. 19, 1956).
19. D. A. Camerson and J. C. Bolger, *HRT Pressurizer Level Instrument, Range and Zero Shifts*, KT-242 (EPS-X-285) (Nov. 27, 1956).
20. A. M. Billings, *HRT Valve Tabulation (Dwg. No. A-24280)*, ORNL CF-56-1-2, rev. 1 (Aug. 13, 1956).
21. A. M. Billings, *Cost of HRT Valves and Allied Equipment*, ORNL CF-56-1-92 (Jan. 20, 1956).
22. A. M. Billings, *HRP Experimental Valve Program*, ORNL CF-56-2-42 (Feb. 14, 1956).
23. A. M. Billings, *Valve Test Loop Operation – November 23, 1955 through October 18, 1957*, ORNL CF-57-12-57 (Dec. 12, 1957).
24. A. M. Billings, *Control Valve and Actuator Drawing Tabulation*, ORNL CF-58-1-17 (Jan. 6, 1958).

25. A. M. Billings, *Life Tests of Stem-Sealing Bellows for HRT Valves*, ORNL CF-58-3-39 (Mar. 17, 1958).

26. A. M. Billings, *Valve Drawing Tabulation, REED Instrumentation and Controls Section*, ORNL CF-59-6-34 (June 12, 1959).

27. A. M. Billings, *Evaluation of General Purpose Valves for 125 psig Air, Steam, and Water Service*, ORNL CF-60-8-144 (Aug. 2, 1960).

28. A. M. Billings, *HRT Letdown Valves*, ORNL CF-57-6-25 (June 5, 1957).

29. A. M. Billings, "Control Valves for Homogeneous Reactors", *ISA J.* **5** (June 1958).

30. W. R. Gall, *Specifications for HRT Reactor and Service Systems*, ORNL CF-55-8-111 (Issue No. 2) (June 7, 1956).

31. W. R. Gall, *Installation of High Pressure Valves*, ORNL CF-56-2-5 (Feb. 2, 1956).

32. F. C. Zapp, *HRT Oxygen Addition System*, ORNL CF-56-3-42 and Addenda (Mar. 2, 1956 and Mar. 21, 1956).

33. A. M. Billings, *HRT Oxygen Metering Stations*, ORNL CF-56-7-72 (July 19, 1956).

34. R. L. Moore, *HRP Quart. Progr. Rept. Apr. 30, 1955*, ORNL-1895, p 38.

35. R. L. Moore, *HRT Control Circuit Proposal*, ORNL CF-54-9-175 (Sept. 28, 1954).

36. R. L. Moore, *HRT Control Circuit Revisions*, ORNL CF-54-11-75 (Nov. 8, 1954).

37. R. L. Moore, *HRT Instrumentation and Controls*, ORNL CF-56-3-169 (Mar. 26, 1956).

38. R. B. Korsmeyer, *HRT Pressurization Control – Meeting No. 1*, ORNL CF-56-3-11 (Mar. 2, 1956).

39. R. B. Korsmeyer, *HRT Pressurization Control – Meeting No. 2*, ORNL CF-56-3-37 (Mar. 8, 1956).

40. M. I. Lundin, *Design Criteria – HRT Pressurization Control*, ORNL CF-56-4-55 (Apr. 10, 1956).

41. R. L. Moore, *HRT Control Circuit Revisions*, ORNL CF-56-6-112 (June 18, 1956).

42. R. L. Moore, *Minutes of HRT Control Circuit Meetings, June 23, 1956 and July 31, 1956*, ORNL CF-56-8-18 (Aug. 3, 1956).

43. R. L. Moore, *Proposed Revisions for HRT Control Circuits*, ORNL CF-56-10-42 (Oct. 8, 1956).

44. R. L. Moore, *Control System for HRT Cooling Water*, ORNL CF-57-2-5 (Feb. 11, 1957).

45. R. L. Moore, *Electrical Revision to HRT Control System*, ORNL CF-57-2-48 (Feb. 13, 1957).

46. F. C. Zapp, *HRT Steam System Instrumentation*, ORNL CF-54-4-213 (Apr. 30, 1954).

47. F. C. Zapp, *HRT Steam System Instrumentation*, ORNL CF-54-5-198 (May 24, 1954).

48. H. D. Wills, *HRT Steam System Feedwater Pressure Control*, ORNL CF-58-4-8 (Apr. 15, 1958).

49. S. J. Ball, *Frequency Response Analysis of the HRT Feedwater Control System*, ORNL CF-58-4-10 (Apr. 4, 1958).

50. R. L. Moore, *Review of HRT Feedwater System*, ORNL CF-58-4-63 (Apr. 9, 1958).

51. J. R. Brown, *Control Relay Coding Tabulation for HRT*, ORNL CF-59-1-149 (Jan. 26, 1959).

52. J. R. Brown, *HRT Pneumatic Header and Control Loop Supply Line Tabulation*, ORNL CF-59-2-32 (Feb. 2, 1959).

53. Staff of ORGDP Electrical Engineering Department, *Revised HRT Electrical System (7500 Bldg.) General Remarks and Drawing Lists*, Inner-Office Memo to Distribution (Nov. 30, 1954).

54. J. R. Brown and D. S. Toomb, *Power and Instrument Wiring Systems for HRP Reactors*, ORNL CF-59-1-37 (Jan. 12, 1959).

55. J. A. Russell, *HRT Electrical Load Survey*, ORNL CF-59-1-69 (Jan. 9, 1959).

9. HRE-2 Cost Analysis

9.1 INTRODUCTION

The construction period for HRE-2 is considered to be from July 1, 1954 through April 30, 1956. Detailed cost data were accumulated for future use. Based on this accumulation of data, Table 9.1 presents a breakdown on various categories of HRE-2 costs as well as a total reactor cost of $3,853,000 through April 30, 1956.[1]

Table 9.1. Summary of HRE-2 Construction Costs to May 1, 1956[a]

Design	
Reactor	$ 549,000
Structure and Services	185,000
Instrumentation	126,000
Total design cost (labor + overhead at 65%)	$ 860,000
Reactor Installation	
Building modification	58,000[b]
Reactor cell and shielding	375,000
Reactor components and piping	1,400,000
Reactor controls (instrumentation and valves)	470,000
Reactor steam and cooling systems	161,000
Miscellaneous service piping	69,000
Remote maintenance tools	54,000
Waste and off-gas system	78,000
Miscellaneous and spare parts	208,000
Supervisory labor	120,000
Total installation (material, labor and overhead)	$2,993,000
Total reactor cost	$3,853,000

[a]Excluding $800,000 cost of supporting research and development labor.
[b]Building housed the HRE-1; modified for housing the HRE-2. Initial cost $300,000.

9.2 CONTAINMENT COST

Containment cost was not considered a specific expense before or during construction. However, an estimate of the cost of modifications to the reactor and shielding necessary to meet containment specifications is presented in Table 9.2 as $160,000.[1]

Table 9.2. Estimated Containment Costs for HRE-2

1. Additions to shield design, required only to meet containment specifications	$ 75,000
2. Cost of sealing conduits and wiring	7,000
3. Cost of leak-tight closures on process service lines	23,000
4. Blast shields on reactor components Reactor pressure vessel, $35,000 Steam generators (2), $10,000	45,000
5. Radiation monitoring of service lines	10,000
Total cost	$160,000

9.3 REACTOR CORE, PRESSURE VESSEL, AND BLAST SHIELD

Detail design, development, and fabrication of the reactor core, pressure vessel, and blast shield were performed by Newport News Shipbuilding and Dry Dock Company at a cost of $329,266.[2] Of this amount $164,692 was charged to design and supporting development; the remainder was charged to HRE-2 as a direct cost. Table 9.3 itemizes these costs and presents unit costs for these three items.

Table 9.3. Reactor Core, Pressure Vessel, and Blast Shield Manufacturing Costs

	Materials	Labor	Overhead	Total
Jigs and fixtures for core vessel	$ 5,371	$ 8,538	$ 7,642	$ 21,551
Jigs and fixture for pressure vessel	189	1,426	1,291	2,906
Core vessel manufacturing	11,617	12,800	12,846	37,263
Pressure vessel manufacturing	26,735	19,838	19,756	66,329
Blast shield manufacturing	14,868	5,212	5,080	25,160
Modifications by ORNL		4,647	3,021	7,668
Core vessel testing	280	306	209	795
Pressure vessel testing	410	696	488	1,594
Sub totals without fee	$59,470	$53,463	$50,333	$163,266
Fee				9,094
Total				$172,360

	Weight (lb)	Cost ($)	Unit Cost ($/lb)
Core vessel	382	62,929	164.75
Pressure vessel	18,727	82,871	4.43
Blast shield	11,453	26,560	2.32

9.4 HEAT EXCHANGER COSTS

Besides the primary steam generators, HRE-2 has many other heat exchange components. Table 9.4 presents some typical cost data for some of these components. The high unit cost for concentric pipe exchangers results primarily from labor charges.[2]

Table 9.4. HRE-2 Heat Exchange Equipment Costs

Component	Item No.	Type	Average Cost ($)	Area (ft^2)	Unit Cost ($/$ft^2$)
Primary heat exchanger	4 and 31	U tube	40,000	480	83.50
Recombiner condenser	8 and 35	U tube	5,995	112	53.50
Reflux condenser	15 and 39	Bayonet tube	2,540	27.6	92.00
Letdown heat exchanger	20 and 45	3-concentric pipe	1,495	8.2	182.00
Cold trap	9a, 9b, 36a, and 36b	Concentric pipe	1,388	5.5	252.00
Space cooler	82a, 82b, 82c, and 82d	Finned tube	1,636	[a]	[a]
Air cooled condenser	60	Finned tube	8,866	13,700	0.65

[a]Unavailable.

9.5 PUMP COSTS

Typical costs for pumps used in the reactor fuel and blanket systems are presented in Table 9.5. Machining, welding, and inspection represent the major portion of the cost for diaphragm pump heads and check valves.[2]

Table 9.5. HRE-2 Reactor Pump Costs

Pump	Item No.	Type	Capacity (gpm)	Average Cost ($/pump)
Fuel circulating	5	Centrifugal	400	29,500[a]
Blanket circulating	28	Centrifugal	230	23,600[b]
Feed pump	21, 41	Diaphragm	1.5	19,615[c]
Purge pump	23, 104, 108, 109	Diaphragm	0.15	5,130[d]

[a]Pump fitted with titanium inserts; without titanium cost would be $23,600.

[b]Pump fitted with stainless steel parts; with titanium inserts cost would be $29,500.

[c]Feed pump consists of drive unit at $7925, two diaphragm heads at $4985, and four check valves at $430.

[d]Purge pump consists of drive unit at $980, one diaphragm head at $3550, and two check valves at $300 (estimated).

9.6 TYPICAL VESSEL COSTS

Typical cost data are presented in Table 9.6 for a few items of equipment.[2] These vessels are constructed of type-347 stainless steel and comply with the requirements of the ASME Boiler and Pressure Vessel Code.

Table 9.6. Miscellaneous Vessel and Storage-Tank Costs

Component	Item No.	Cost Each ($)	Approximate Weight (lb)	Unit Cost ($/lb)
Pressurizer		9173	2100	4.40
Fuel dump tank and evaporator	7a, 7b	5337	1200	4.45
Blanket dump tank and evaporator	34a, 34b	5694	2700	2.10
Condensate tanks	14, 37	1870	450	4.15
Transfer tanks	19, 42	500	65	7.75
Holdup tank	22	557	170	3.35

9.7 PIPING COSTS

From Table 9.1 the reactor components and piping are estimated to cost $1,400,000, and miscellaneous service piping is estimated to cost $69,000. From the available data the reactor components are estimated at approximately $500,000.[2] Hence by difference the piping cost for HRE-2 is of the order $969,000. Data suitable for estimating stainless steel piping costs have been presented.[3,4] These data are based on purchase orders and vendors information and reflect the prices current in the latter part of 1957. As such they may be adjusted directly for current prices.

REFERENCES

1. J. A. Lane, H. G. MacPherson, and F. Maslan (eds.), p 398 in *Fluid Fuel Reactors*, Addison-Wesley, Reading, Mass., 1958.
2. S. E. Beall, unpublished cost data.
3. C. A. Burchsted, *Cost of HRP-200a Quality Type 347 Stainless Steel Shapes*, ORNL CF-57-11-82 (Nov. 18, 1957).
4. C. A. Burchsted, *Cost of Large Diameter Stainless Steel Pipe and Fittings*, ORNL CF-57-12-22 (Dec. 3, 1957).

10. Appendix

ITEM NUMBER AND FLOWSHEET IDENTIFICATION OF COMPONENTS

Item No.	Component	System Flowsheet
1	Core Tank	High-pressure fuel
2	Fuel pressurizer	High-pressure fuel
3	Fuel gas separator	High-pressure fuel
4	Fuel heat exchanger	High-pressure fuel
5	Fuel circulating pump	High-pressure fuel
6	Fuel dump cooler	High-pressure fuel
7a, b	Fuel dump tank and evaporator	Low-pressure fuel
7c	Entrainment separator	Low-pressure fuel
8	Fuel recombiner condenser	Low-pressure fuel
8a	Fuel recombiner and iodine removal bed	Low-pressure fuel
9a, b	Fuel cold trap	Low-pressure fuel
10a, b, c	Fission product adsorber	Waste and vent
11	Off-gas vacuum pump	Waste and vent
12	Off-gas stack filter	Waste and vent
13	Off-gas stack	Waste and vent
13a	Off-gas stack fan	Waste and vent
14	Fuel condensate storage tank	Low-pressure fuel
15	Fuel storage-tank reflux condenser	Low-pressure fuel
16a, b	Fuel storage tank and evaporator	Low-pressure fuel
17	Fuel feed cooler	Low-pressure fuel
18	Low-pressure fuel sample station	Low-pressure fuel
19	Fuel transfer tank	Low-pressure fuel
20	Fuel letdown heat exchanger	High-pressure fuel
21	Fuel feed pump	Low-pressure fuel
22	Holdup tank	Low-pressure fuel
23	Fuel pressurizer purge pump	Low-pressure fuel
24	Fuel sample cooler	High-pressure fuel
25	High-pressure fuel sample station	High-pressure fuel
26	Oxygen station	High-pressure fuel
27	Secondary fuel recombiner	Low-pressure fuel
28	Blanket circulating pump	High-pressure blanket
29	Blanket pressurizer	High-pressure blanket
30	Blanket gas separator	High-pressure blanket
31	Blanket heat exchanger	High-pressure blanket
32	Reactor pressure vessel	High-pressure blanket
33	Blanket dump cooler	High-pressure blanket
34a, b	Blanket dump tank and evaporator	Low-pressure blanket
34c	Entrainment separator	Low-pressure blanket

Item No.	Component	System Flowsheet
35	Blanket recombiner condenser	Low-pressure blanket
35a	Blanket recombiner	Low-pressure blanket
36a, b	Blanket cold trap	Low-pressure blanket
37	Blanket condensate storage tank	Low-pressure blanket
38	High-pressure blanket sample station	High-pressure blanket
39	Blanket storage tank reflux condenser	Low-pressure blanket
40	Blanket feed cooler	Low-pressure blanket
41	Blanket feed pump	Low-pressure blanket
42	Blanket transfer tank	Low-pressure blanket
43	Blanket sample cooler	High-pressure blanket
44	Low-pressure blanket sample station	Low-pressure blanket
45	Blanket letdown heat exchanger	High-pressure blanket
46	Turbine oil filter	Reactor steam
47	Deleted	
48	Blanket purge pump cooler	Low-pressure blanket
49a, b	Blanket storage tank and evaporator	Low-pressure blanket
50	Storage tank cold trap	Low-pressure fuel
51	Building steam condensate tank	Service steam
52	Omit	
53	Fuel steam drum	Reactor steam
54	Blanket steam drum	Reactor steam
55	Omit	
56	Package warmup boiler	Reactor steam
57	Steam turbine	Reactor steam
58	Generator	Reactor steam
59	Turbine condenser	Reactor steam
60	Air-cooled condenser	Reactor steam
61	Cooling tower	Cooling water
62a, b	Cooling tower pumps	Cooling water
63	Hotwell pump	Reactor steam
64	Deaerator and surge tank	Reactor steam
65a, b	Feedwater pump	Reactor steam
66	Omit	
67a, b	Gas accumulator	Oxygen addition
68	Fuel purge pump cooler	Low-pressure fuel
69	Refrigerant compressor	Refrigeration
70	Oil separator	Refrigeration
71	Chiller and storage tank	Refrigeration
72	Warm storage tank	Refrigeration
73	Amsco (cold) circulating pump	Refrigeration
74	Amsco (warm) circulating pump	Refrigeration
75	Refrigerant condenser	Refrigeration
76	Omit	
77	Omit	
78	Omit	
79	Omit	
80a	Waste Evaporator	Waste and vent
80b	Waste evaporator entrainment separator	Waste and vent
81	Decontamination system	Waste and vent
82a, b, c, d	Space cooler	Cooling water

Item No.	Component	System Flowsheet
83	Omit	
84	Omit	
85	Omit	
86	Omit	
87	Omit	
88a, b	Feedwater accumulator	Reactor steam
89a	Chemical-plant-vent vacuum pump	Waste and vent
89b	Reactor-vent vacuum pump	Waste and vent
90a, b	Waste-evaporator condenser	Waste and vent
91	Reactor-vessel cooler	Demineralized cooling water
92	Thermal-shield cooler	Demineralized cooling water
93	1000-gal waste condensate tank	Waste and vent
94	12,000-gal waste tank	Waste and vent
95	300,000-gal waste storage pond	Waste and vent
96	Omit	
97	Thermal insulation in reactor cell	
98	Reactor blast shield	
99	Dewatering pump	Waste and vent
100	Dump tank weigh beam assembly	Low-pressure fuel and blanket
101	Condensate weigh beam assembly	Low-pressure fuel and blanket
102	Cell air monitor blower	Waste and vent
103	Condensate receiver tank	Steam and condensate service
104	Blanket pressurizer purge pump	Low-pressure blanket
105	Heat-exchanger blast shield	
106	Amsco (cold) drier	Refrigeration
107	Amsco (warm) drier	Refrigeration
108	Fuel circulating pump purge pump	Low-pressure fuel
109	Blanket circulating pump purge pump	Low-pressure blanket
110	F-22 drier	Refrigeration
111	F-22 receiver	Refrigeration
112	Thermal shield cooler fill tank	Demineralized cooling water
113	Omit	
114	Omit	
115	Omit	
116	Omit	
117	Fuel storage tank recombiner	Low-pressure fuel
118	Fuel purge flow heat exchanger	Demineralized cooling water
119	Blanket purge flow heat exchanger	Demineralized cooling water
120	Rupture disc assembly	
121	Catch tank	Refrigeration
122	Demineralized-water surge tank	Demineralized cooling water
123	Purge pump coolant heat exchanger	Demineralized cooling water
124a, b	Demineralized-water circulating pump	Demineralized cooling water
125	Demineralized-water heat exchanger	Demineralized cooling water
126	Omit	
127	Demineralized-water heater	Demineralized cooling water
128a, b	Filters	Demineralized cooling water
129a, b	Instrument air compressors	Instrument air
130a, b	Condensate tank	Demineralized cooling water

Item No.	Component	System Flowsheet
131	Fuel feed pump oil cooler	Cooling water
132	Blanket feed pump oil cooler	Cooling water
133	Steam condenser	Demineralized cooling water
134	Turbine oil cooler	Cooling Water
135	Liquid subcooler	Refrigeration
136	Heat exchanger	Refrigeration
137	Evaporator	Refrigeration
138a, b	Water-treatment-solution storage tanks	Reactor steam
139	Lapp pump	Leak detector
140	Cornelius pump	Leak detector
141	Omit	
142	Fill tank	Leak detector
143	Control room sump jet	Steam and condensate service
144	Control room sump pump	Steam and condensate service
145	Dirt trap	Low-pressure fuel
146	Dirt trap	Low-pressure blanket

INTERNAL DISTRIBUTION

1. G. M. Adamson
2. S. E. Beall
3. R. Blumberg
4. E. G. Bohlmann
5. C. J. Borkowski
6. W. D. Burch
7. R. H. Chapman
8. R. D. Cheverton
9. C. J. Claffey
10. C. W. Collins
11. D. E. Ferguson
12. J. H Frye, Jr.
13. W. R. Gall
14. R. H. Guymon
15. P. H. Harley
16. P. N. Haubenreich
17. J. W. Hill
18. E. C. Hise
19. P. R. Kasten
20. C. E. Larson
21. M. I. Lundin
22. E. C. Miller
23. R. L. Moore
24. R. B. Parker
25. C. L. Segaser
26. I. Spiewak
27. J. A. Swartout
28. W. Terry
29. R. Van Winkle
30. F. C. Zapp
31. ORNL Patent Office

32–33. Central Research Library
34. Biology Library
35–36. Reactor Division Library
37–38. ORNL – Y-12 Technical Library, Document Reference Section
39. MSRP Director's Office (R. B. Briggs)
40–44. Laboratory Records Department
45. Laboratory Records, ORNL R.C.

EXTERNAL DISTRIBUTION

46. Research and Development Division, AEC, ORO

47–61. Division of Technical Information Extension