ORNL-P-661

NOTICE

NOV 13 1964

EFFECTS OF GAMMA RADIATION ON CATION EXCHANGE RESIN IN A FLOWING WATER SYSTEM *

MASTER

W. C. Yee and W. Davis, Jr.

Oak Ridge National Laboratory
Oak Ridge, Tennessee

LEGAL NOTICE

This report was prepared as an account of Government sponsored work. Neither the United States, nor the Commission, nor any person acting on behalf of the Commission:

A. Makes any warranty or representation, expressed or implied, with respect to the accuracy, completeness, or usefulness of the information contained in this report, or that the use of any information, apparatus, method, or process disclosed in this report may not infringe privately owned rights; or

B. Assumes any liabilities with respect to the use of, or for damages resulting from the use of any information, apparatus, method, or process disclosed in this report.

As used in the above, "person acting on behalf of the Commission" includes any employee or contractor of the Commission, or employee of such contractor, to the extent that such employee or contractor of the Commission, or employee of such contractor prepares, disseminates, or provides access to, any information pursuant to his employment or contract with the Commission, or his employment with such contractor.

*Research sponsored by the U. S. Atomic Energy Commission under contract with the Union Carbide Corporation.

Submitted for presentation at the American Nuclear Society Winter Meeting, San Francisco, California, Nov. 30-Dec. 3, 1964.

Paper sponsored by ANS member, R. E. Blanco of Oak Ridge National Laboratory.

ABSTRACT

Prolonged exposure of cation exchange resin in the hydrogen form to gamma-radiation and flowing water caused more drastic changes in the chemical and physical properties of the material than has been reported by other investigators for resin exposed to like dosage in a static system. After a dose of 0.75×10^9 rads in a dynamic system, the rate of loss of strong-acid capacity was 20 to 25% per whr per gram of dry resin, compared with the 4% and the 10 to 20% found by others for the static system. Also, de-crosslinking of more than 4% of the resin matrix accompanied this loss of capacity, compared with the more moderate de-crosslinking or even additional crosslinking reported for the static system.

Gamma radiation also caused gas evolution, bead swelling, and produced a weak-acid capacity in the resin equivalent to 3 to 5% of the original strong-acid capacity.

Decomposition products included soluble sulfuric, sulfonic, and oxalic acids, and insoluble bits of resin. The G(-S) value was estimated to represent 1.0 to 1.2 atoms lost per 100 ev of energy absorbed.

Although ion exchange is widely used for decontaminating waste waters and separating and purifying radioactive nuclides, the limitations imposed by radiation damage to organic resins are poorly defined. Previously reported work has dealt with resin exposed under a variety of conditions: the "bone-dry" state,[1,2] the "moist," air-dried state,[2-6] and the completely wet, swollen state.[6,7] In addition, all reported exposures were made in quiet water, which permitted the accumulation of degradation products formed during irradiation. Changes induced under these circumstances would not necessarily apply to processing conditions where, typically, resin is submerged in a flowing aqueous stream which would remove some of the degradation products.

The object of this work was to study the changes in resin properties under simulated conditions of processing by exposing a fixed bed of cation-exchange resin to cobalt-60 gamma radiation and flowing water.

EXPERIMENTAL

Materials. The cation exchange resins Dowex 50W of 8%, 12%, 16% and 20% crosslinkage, and Amberlite 200, a highly crosslinked yet porous material (macroreticular), were tested. Before irradiation, each sample was converted to the hydrogen form by treatment with caustic, ethyl alcohol, nitric acid, and demineralized water in the usual way.

Procedure. In each experiment, 30 ml of resin in a stainless steel cylinder was inserted into a 10,000-curie cobalt-60 gamma-ray source and exposed to a radiation intensity of about 0.012 watt per gram of dry resin. The apparatus is sketched in Fig. 1. Demineralized water of less than one micromho/cm specific conductance was pumped downward through the resin column at a linear flow rate of 1 cm/min (4 ml/min). The superficial holdup time of the

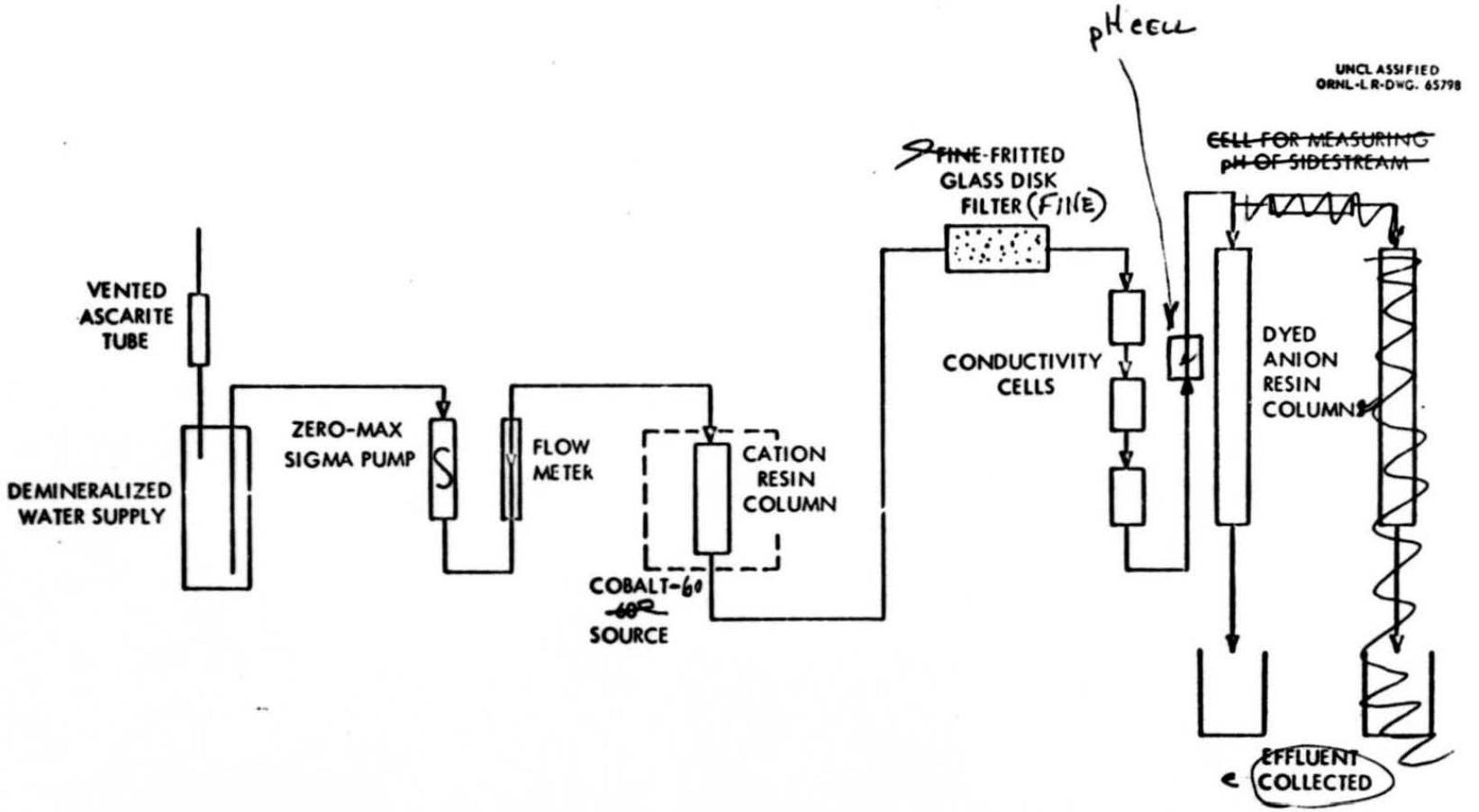

Fig. 1. Flow Diagram of Ion Exchange Resin Radiation Experiment.

water was estimated to be 7 min. Outside of the radiation field and in sequence, the column effluent was (1) passed through a sintered-glass disk to remove entrained particles, (2) monitored continuously for pH and specific conductance, (3) passed through a dyed bed of anion resin in the hydroxyl form to sorb radiation degradation products, and (4) finally collected for analysis.

Analyses. The chemical and physical properties of the resin samples were measured before and after exposure to radiation. Resin capacity was determined by titration to pH 7, using a glass electrode, and by sulfur analysis. Water content was determined by removing the excess water by centrifugation and then drying the resin that thus contained only interstitial water; 12-hr in a vacuum oven at 50 to 60°C was sufficient. The collected effluent solution of each run was concentrated about fiftyfold in an especially designed vacuum-distillation system[8] at 10 to 15°C. This concentrate and the caustic eluant from the dyed anion column were analyzed by wet chemical and several instrumental methods in an attempt to identify the products of resin degradation.

RESULTS AND DISCUSSION

Exposing the cation exchange resin to gamma-radiation changed both the chemical and physical properties. After a dose of 0.75×10^9 rads (2 whr per gram of dry resin), Dowex 50W resin lost 10 to 20% of its original weight and 40 to 50% of its strong-acid capacity, the less-crosslinked resin losing more of each (Table 1). A weak-acid capacity of 3 to 5% of the original strong-acid capacity was also acquired. After 3.9×10^9 rads, (10.6 whr per gram of dry resin), the 8%-crosslinked resin lost more than 90% of its original weight and 98% of its strong-acid capacity. The macroreticular resin, Amberlite 200, showed a 13% weight loss and a 43% strong-acid capacity loss after 0.97×10^9 rads; this is comparable to the performance of a conventional 16- or 20%-crosslinked Dowex 50W resin after an exposure of 0.75×10^9 rads.

Table 1. Prolonged Exposure of Cation Exchange Resins to Gamma-Radiation Causes Loss in Weight, Loss of Strong-Acid Capacity, and Produces Weak-Acid Capacity

Original Resin			Gamma	Exposed Resin				
Crosslinkage and Mesh Size	Strong Acid Capacity (meq/dry g)	Sulfur Content (wt %)	Radiation Dose ($r \times 10^{-9}$)	Mass Loss (wt %)	Strong-Acid Capacity (meq/dry g)	Weak-Acid Capacity (meq/dry g)	Sulfur Content (wt %)	G(-S) atom lost / 100 ev sorbed
Dowex 50W X-8 (20-50 mesh)	4.80	15.4	0.76	20	3.18	0.25	13.7	1.0
Dowex 50W X-12 (20-50 mesh)	4.85	14.9	0.77	18	3.38	0.15	13.5	1.1
Dowex 50W X-16 (20-50 mesh)	4.81	15.5	0.75	10	3.47	0.22	14.5	1.2
Dowex 50W X-20 (20-100 mesh)	4.59	14.2	0.77	15	3.27	0.14	12.9	1.6
Dowex 50W X-8 (20-50 mesh)	4.97	15.7	3.9	96	1.88	a	7.0	-
Amberlite 200 (16-50 mesh)	5.00	14.8	0.97	13	3.30	a	12.6	1.2

[a]Only strong-acid capacity determined.

A comparison of the capacity data of this work for Dowex 50W resin with those reported in the literature for comparable radiation dose indicates that the rate of loss is greater when the solutions flow through the resin bed. Utley[5] reported that the loss rate for air-dried resin exposed in a static system was about 4% per whr per gram of dry resin for a dose of 0.9×10^9 rads. For resin submerged in a sealed tube of stagnant water and exposed to 0.38×10^9 rads, Higgins[7] reported a loss rate of 10 to 20% per whr per gram of dry resin. In the flowing-water experiments reported here, the capacity loss rate was 20 to 25% per whr per gram of dry resin for an exposure of 0.75×10^9 rads.

Sulfur analysis of the resin samples exposed to 0.75×10^9 rads showed that 20 to 25% more sulfur remained on the resin matrix than would be indicated by the active sulfonate groups as determined by titration (Table 1). On the basis of the sulfur analysis, the average rate of loss of sulfur during exposure, G(-S), was estimated to be 1.0 to 1.2 atoms per 100 ev of energy absorbed.

Gamma radiation darkened and swelled the resin beads. After 0.75×10^9 rads, the increase in particle size of Dowex 50W resin beads varied inversely with the degree of crosslinkage, ranging from a 25% increase for 8%-crosslinked resin to no detectable change for the 20% resin (Fig. 2). Optical microscopy studies (10X) of the wet, swollen resin after exposure showed no fissuring or fragmentation similar to that reported for resin exposed in the air-dried state.[5] Despite the swelling, there was an overall 1 to 10% decrease in resin volume due to a 10 to 20% loss of weight.

Data on moisture content and capacity loss show that de-crosslinking of the resin matrix occurred during exposure of the material in a flowing stream of water (Table 2). It was estimated that the number of interstitial water molecules retained per sulfonate ($-SO_3H$) group remaining on the resin after 0.75×10^9 rads averaged 120% greater than that for the

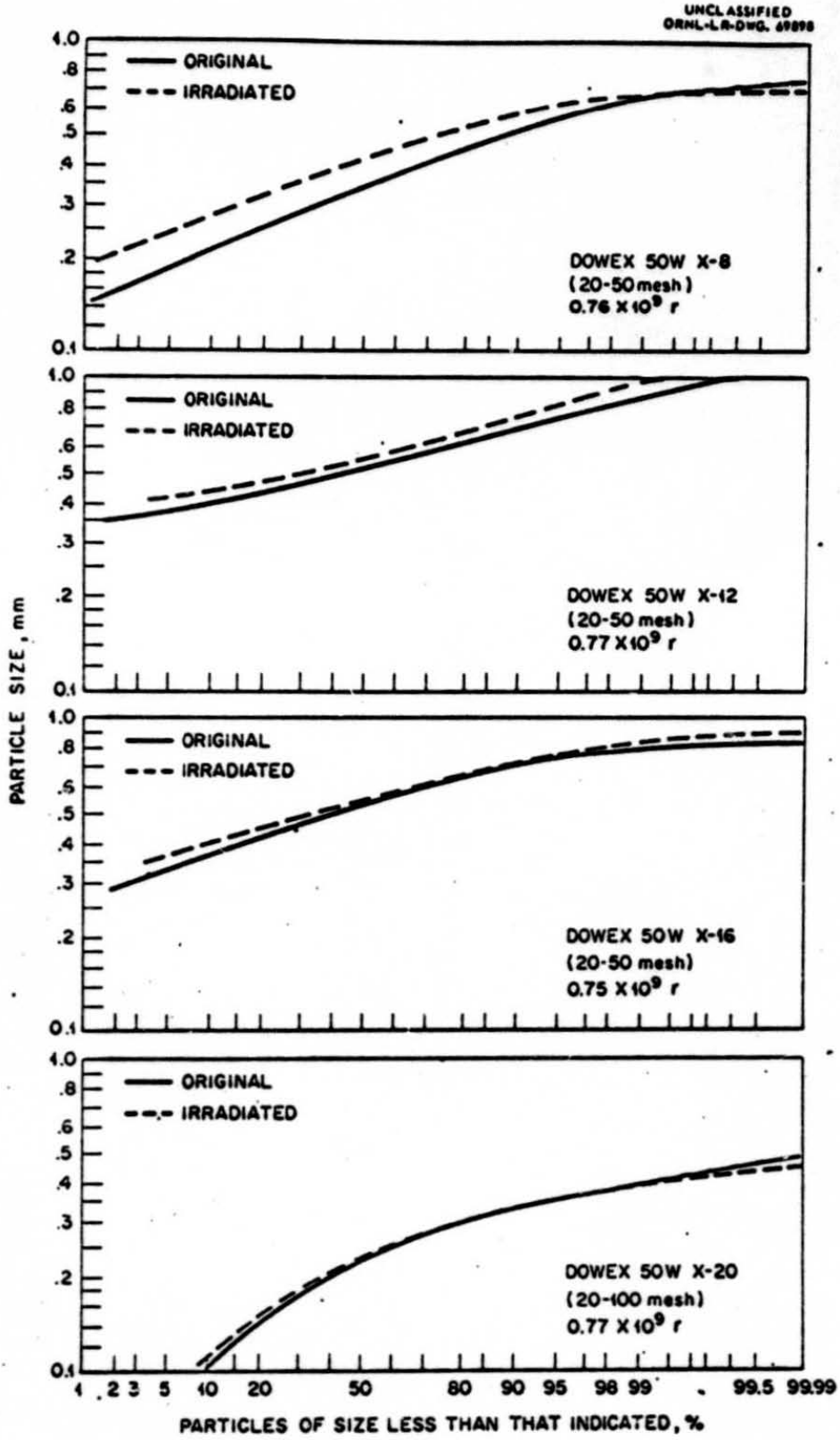

Fig. 2. The Increase in Mean Particle Size of Wet, Swollen Resin was Most Noticeable on the Least (8%) Crosslinked Resin.

ORNL-LR-DWG ?

Table 2. The Matrix of the Cation Exchange Resin Dowex 50W De-crosslinks When Exposed to Gamma Radiation in a Flowing Stream of Water

Crosslinkage and Mesh Size	Radiation Dose[a] ($r \times 10^{-9}$)	Water Content (Gram H_2O / Gram Dry Resin)		Strong-Acid Capacity (meq per dry gram)		Water Retention (Molecules H_2O / $-SO_3$ Group)		Water Retention % Increase	
		Initial	Final	Initial	Final	Initial	Final	Due to Lower Crosslinkage of Original Resin	Due to Irradiation
8% (20-50 mesh)	0.76	1.01	1.54	4.8	3.2	11.7	27.1	26	132
12% (20-50 mesh)	0.77	0.80	1.28	4.9	3.4	9.2	20.8	7	126
16% (20-50 mesh)	0.75	0.74	1.28	4.8	3.5	8.6	20.5	27[b]	138
20% (20-100 mesh)	0.77	0.55	0.72	4.6	3.3	6.7	12.2		82[c]

[a] Irradiated in a ^{60}Co gamma-radiation field of 0.012-0.013 watts per gram of dry resin.

[b] For example, $100\left(\frac{8.6-6.7}{6.7}\right) = 27\%$.

[c] For example, $100\left(\frac{12.2-6.7}{6.7}\right) = 82\%$.

original materials. For unexposed resins, this ratio showed a maximum increase of only 30% for each 4% decrease in crosslinkage. The loss of polar sulfonate groups during irradiation would tend to reduce the water content of the resin. Thus, the observed increase in water uptake is attributed to decrosslinkage of the resin matrix of more than 4%.

Other investigators have reported both additional crosslinking and moderate decrosslinking at comparable dosages for resin exposed statically in the air-dried state. Utley[5] found additional crosslinking after 0.44×10^9 rads; that is, a decrease in the water retention ratio of 16% for both 8- and 12%-crosslinked Dowex 50W resin. Data reported by Fisher[2] and by Smith and Groh[6] show that de-crosslinking occurred in each of their experiments, the ratio increasing about 40% after 0.22×10^9 rads for Amberlite IR-120 (8%-crosslinked cation resin) in the former case and, in the latter case, increasing 80% after 0.28×10^9 rads for 12%-crosslinked Dowex 50W. The greater increase in water retention (as high as 138%) observed here implies that de-crosslinking plays a major role in the damage reported for resin used in radiochemical processing. Apparently, when a resin bed is exposed to both gamma-radiation (from fission products) and to a flowing aqueous stream, the crosslinks are severed, resulting in detrimental effects such as (1) resin dissolution and capacity loss and (2) the introduction of soluble and insoluble contaminants into the eluted products.

The effluent of each of these experiments contained gaseous, soluble, and insoluble products of resin decomposition. The gaseous and insoluble products were not identified, but ultracentrifuge and light-scattering studies did indicate that the solids suspended in solution had a density of 1 and a molecular weight of several million.

The dissolved products were acidic, as shown by the continuously recorded pH and specific conductivity data (Figs. 3 and 4) and included sulfate, sulfonate, and oxalate ions, as identified

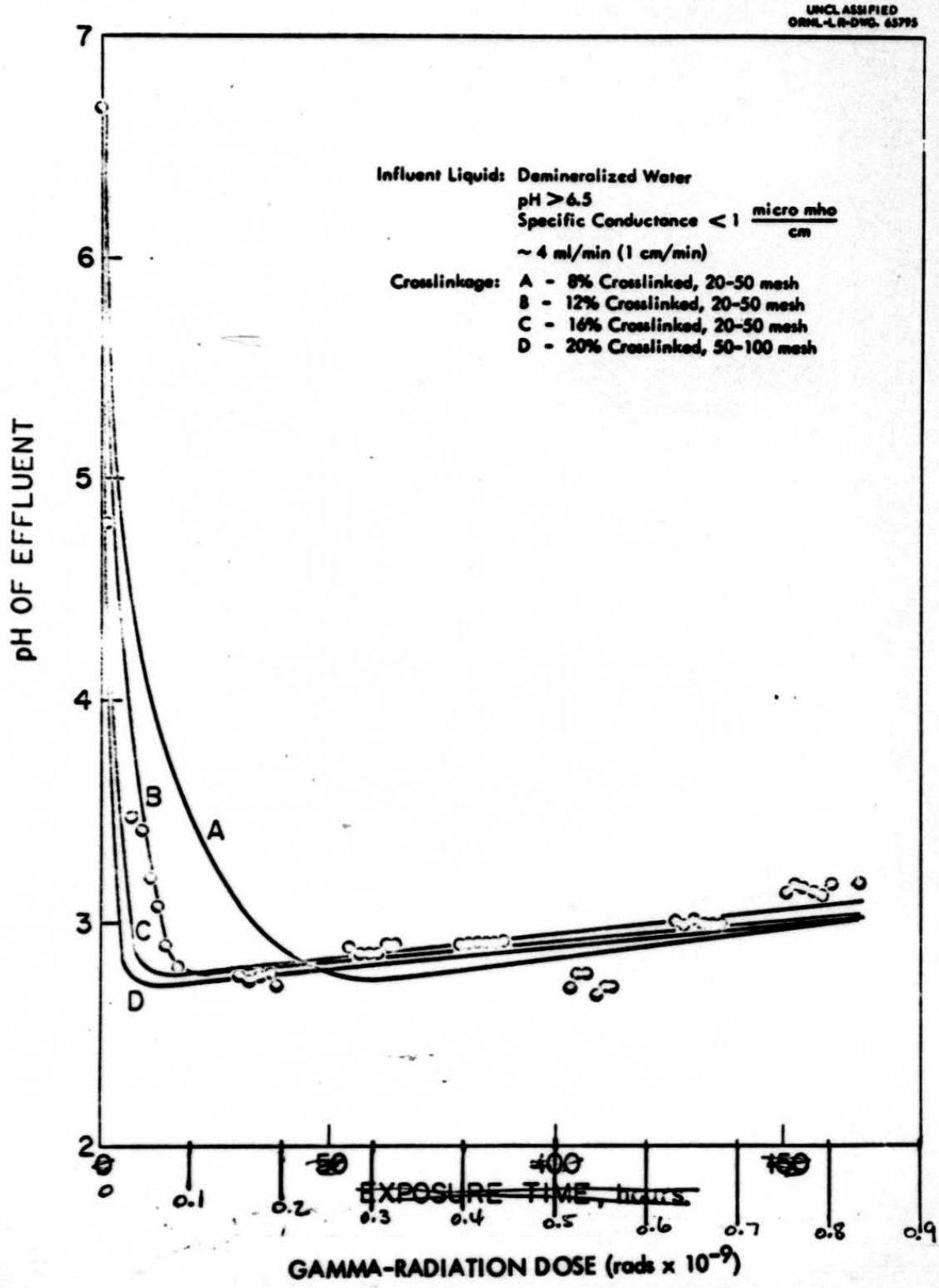

Fig. 3. The Acidity of the Soluble Products of Dowex 50W Resin Decomposition Decreases with Increasing Radiation Dose.

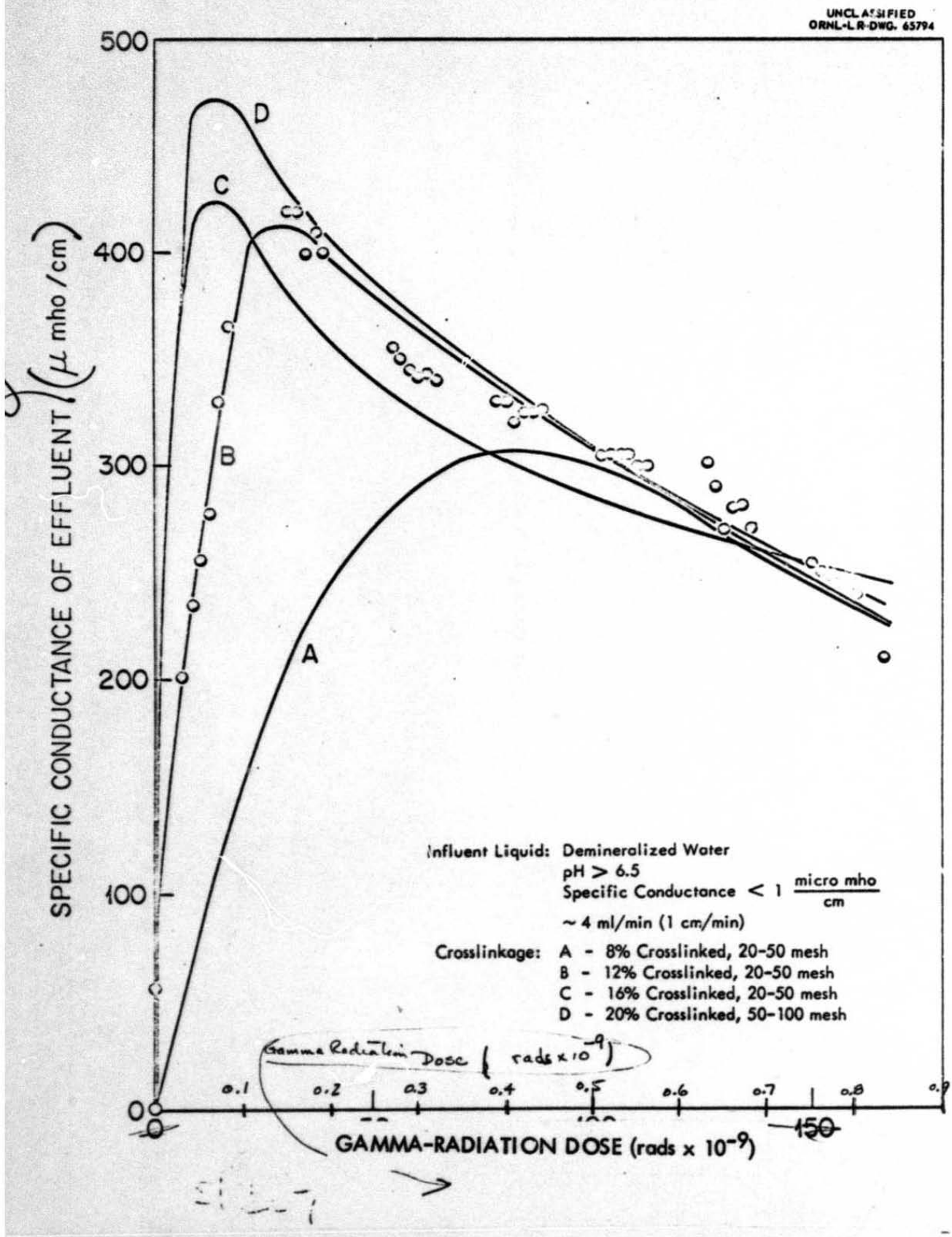

Fig. 4. The Specific Conductance of the Soluble Products of Dowex 50W Resin Decomposition Decreases with Increasing Radiation Dose.

by wet chemistry and paper chromatography. A comparison of reported[9-11] and experimental specific conductance data indicates that the concentration of acid in the effluent was about 10^{-3} M, in agreement with the observed pH data. Starting with a maximum specific conductance of about 400 μmho/cm and a minimum pH of 2.7, the acidity decreased with increasing radiation dose. About 75% of the soluble sulfur in the effluent was in the form of sulfate.

ACKNOWLEDGEMENT

We are indebted to H. Kubota, W. R. Laing, T. Willmarth, and J. S. Johnson for their analytical and interpretive assistance, and to J. T. Roberts for his helpful discussions with us. Our thanks go to Dow Chemical Company and Rohm and Haas Company for supplying complimentary samples of Dowex 50W and Amberlite 200 resins, respectively.

REFERENCES

1. K. A. Nater, Atoomenergie 4, 155 (1962).
2. S. A. Fisher, USAEC report RMO-2528 (1954).
3. R. E. Wedemeyer, Ph.D. thesis, Vanderbilt University (1953).
4. J. Payne, M.A. thesis, Vanderbilt University (1956).
5. J. W. Utley, Ph. D. thesis, Vanderbilt University (1959).
6. L. L. Smith and H. J. Groh, USAEC report DP-549 (1961).
7. I. R. Higgins, USAEC report ORNL-1325 (1953).
8. R. H. Stevens, USAEC report K-1594 (1964).
9. M. Hlasko and A. Salitowna, Bull. Intern. Acad. Polanaise., Classe Sci. Math Nat. 1035A, 189 (1935).
10. H. H. Jeffery and A. I. Vogel, J. Chem. Soc. 1932 , 400 (1932).
11. L. S. Darkin, J. Am. Chem. Soc. 63 , 1007 (1941).