CENTRAL RESEARCH LIBRARY
DOCUMENT COLLECTION

OAK RIDGE NATIONAL LABORATORY
operated by
UNION CARBIDE CORPORATION
for the
U.S. ATOMIC ENERGY COMMISSION

MARTIN MARIETTA ENERGY SYSTEMS LIBRARIES
3 4456 0133700 7

ORNL-TM-1141
(conf-650968-1)

REFABRICATION TECHNOLOGY FOR THE THROIUM-URANIUM-233 FUEL CYCLE

A. L. Lotts
D. A. Douglas, Jr.

CENTRAL RESEARCH LIBRARY
DOCUMENT COLLECTION
LIBRARY LOAN COPY
DO NOT TRANSFER TO ANOTHER PERSON
If you wish someone else to see this document, send in name with document and the library will arrange a loan.

NOTICE This document contains information of a preliminary nature and was prepared primarily for internal use at the Oak Ridge National Laboratory. It is subject to revision or correction and therefore does not represent a final report.

LEGAL NOTICE

This report was prepared as an account of Government sponsored work. Neither the United States, nor the Commission, nor any person acting on behalf of the Commission:

A. Makes any warranty or representation, expressed or implied, with respect to the accuracy, completeness, or usefulness of the information contained in this report, or that the use of any information, apparatus, method, or process disclosed in this report may not infringe privately owned rights; or

B. Assumes any liabilities with respect to the use of, or for damages resulting from the use of any information, apparatus, method, or process disclosed in this report.

As used in the above, "person acting on behalf of the Commission" includes any employee or contractor of the Commission, or employee of such contractor, to the extent that such employee or contractor of the Commission, or employee of such contractor prepares, disseminates, or provides access to, any information pursuant to his employment or contract with the Commission, or his employment with such contractor.

ORNL-TM-1141

Contract No. W-7405-eng-26

Metals and Ceramics Division

REFABRICATION TECHNOLOGY FOR THE THORIUM-URANIUM-233 FUEL CYCLE*

A. L. Lotts and D. A. Douglas, Jr.

JUN 2 1965

---

*Research sponsored by the U. S. Atomic Energy Commission under contract with the Union Carbide Corporation.

For presentation at the IAEA Panel on "Utilization of Thorium in Power Reactors," Vienna, Austria, June 14-18, 1965.

MARTIN MARIETTA ENERGY SYSTEMS LIBRARIES

3 4456 0133700 7

CONTENTS

Page

Abstract---------- 1

Introduction---------- 2

Problems in Fuel Refabrication---------- 3

Effect of Fuel Isotopic Content and Recycle Scheme on Fabrication Plant Design---------- 3

Requirements and Features of the Remote Fuel Element Production Plant---------- 14

Need for Processing Equipment Simplicity---------- 15

Requirements for Simplicity in Fuel Element Design---------- 15

Selection of Simplified Processes and Optimum Fuel Element Designs--- 15

Importance of Fuel Element Design---------- 16

Simplified Processes---------- 19

Process for Metal-Clad Oxide Fuel Elements---------- 19

Fueled-Graphite Process---------- 21

Oak Ridge National Laboratory Pilot-Scale Demonstration---------- 23

Thorium-Uranium Recycle Facility---------- 23

Process and Equipment Design for TURF---------- 27

Criteria for Process and Equipment Design---------- 27

Fabrication of Oxide-Bearing Metal-Clad Fuel Bundles------- 29

Fueled-Graphite Equipment---------- 32

Present Status of the Facility and Equipment---------- 35

Refabrication Economics---------- 35

Method of Analysis---------- 36

Cost of Preparing Fuel Materials by the Sol-Gel Method---------- 36

Basis for Calculation of Fabrication Costs---------- 39

Cost of a Typical Metal-Clad Oxide Fuel Element---------- 39

Cost of Fabrication of Fueled-Graphite Elements---------- 42

Cost Penalties for Remote Fabrication---------- 42

Acknowledgement---------- 47

References---------- 48

REFABRICATION TECHNOLOGY FOR THE THORIUM-URANIUM-233 FUEL CYCLE

A. L. Lotts and D. A. Douglas, Jr.

ABSTRACT

To achieve low power costs, various reactor systems that would use the thorium-uranium-233 fuel cycle depend to a great extent upon the cost of fuel cycle operations. Since the fabrication of fuel is a major contributor to the cost of any fuel cycle, economical techniques of refabricating fuel must be developed. This paper discusses the factors which should be considered in the refabrication of bred fuel and describes the approach of the Oak Ridge National Laboratory toward solution of the problems encountered. This is followed by a discussion of the types and features of fabrication plants that should be employed for various recycle schemes and isotopes. Methods of minimizing refabrication cost are included in an analysis of refabrication technology for two types of fuel elements, that for high-temperature gas-cooled reactors and that for the Spectral Shift Control Reactor (SSCR). The ORNL refabrication program and the Thorium-Uranium Recycle Facility (TURF), which is to be used for pilot-scale demonstration of refabrication technology, are described. The paper is concluded by an analysis of the effect of production rate and isotopic content of fuel on refabrication cost.

INTRODUCTION

Various reactor systems that would use the thorium-uranium-233 cycle are under development because of their potential for achieving low power costs and high fuel utilization. The achievement of low power costs depends to a great extent upon the economics, and consequently the technology, involved in the recycle of fuel from such reactors. Technical development is required for shipping, chemical processing, fuel preparation, and refabrication of bred fuel. Since the cost of fabricating fuel is a major contributor to the cost of any fuel cycle, it is essential that we consider the technology and economics of refabricating fuel elements of various reactor systems.

There is little experience that can be used in the solution of the technical problems which exist in the refabrication of fuel. An assessment, at the present time, of the refabrication technology for the Th-^{233}U fuel cycle must be considered very preliminary for several reasons. Current fuel element designs are based principally on processes optimized for initial and, therefore, contact fabrication. This could lead to erroneous conclusions since heavy penalties might be applied to fuel element costs because certain contact steps used conventionally become extremely awkward and expensive when they are automated and performed under conditions imposed by recycle fuel. On the other hand, if we assume a design and a fabrication technique to be suitable for refabrication, we may err in estimating the extent to which a process can be extrapolated from meager data to a large-scale refabrication plant. There is little experience with recycle fuel and none with certain types of fuel elements. There is no relevant experience with large plant processing or the economies to be realized in large plants fabricating fuel elements for power reactors.

Because of the uncertainties that currently shadow the technology and economics of refabricating fuel, it is necessary that development programs be carried out to gain an understanding of the technology and to seek methods for eventual economical utilization of recycle fuel in power

reactor systems. This necessity has led various investigators[1-8] and ourselves to programs for detailed evaluation of the technical and economic feasibility of refabrication. In this paper, we shall present a number of factors which must be considered if one is to refabricate bred fuel and shall suggest methods of attacking problems encountered in refabrication technology. We shall discuss our plans for pilot-scale demonstration of the refabrication of two types of fuel elements. The paper will be concluded by an analysis of the effect of production rate and isotopic content of fuel on refabrication cost.

PROBLEMS IN FUEL REFABRICATION

Refabrication economics are influenced by a number of major factors which are readily recognized. Among those factors are the fuel element design, the process used for fabrication, the isotopic content of the fuel, and the refabrication plant and equipment design greatly affect fabrication costs.

Effect of Fuel Isotopic Content and Recycle Scheme on Fabrication Plant Design

For any proposed fabrication plant, one has the problem of selecting for the given isotope the type or mode of fabrication that is to be employed in the fabrication of either first cycle or recycle fuel. The possibilities are contact, hooded, glove box, semiremote, or remote operation. We have chosen to define these terms as follows: (1) Contact operations are those in which the operator has direct contact with the material. (2) Hooded operations are those which are contained in ventilated enclosures that are not hermetically sealed. (3) Glove box operations are those requiring hermetic sealing of the equipment. (4) Semiremote operations are those requiring light shielding. (5) Remote operations are those requiring heavy shielding and totally remote operation. The type and quantity of the isotope in the fuel and the quantity of the fuel being processed dictate the type of operation to be selected.

Several recycle systems can often be used. For example, in the High-Temperature Gas-Cooled Reactor (HTGR) one may choose not to recycle the thorium, but to recycle only the ^{233}U. With this particular fuel element design, one then has the choice of using either homogeneous $(U\text{-}Th)C_2$ particles or discrete particles of UC_2 and ThC_2. With $(U\text{-}Th)C_2$ particles, all of the material must be handled in the refabrication plant, but when the discrete particles are used the particles containing virgin thorium can be prepared in a hooded operation. The other alternative is to recycle the thorium and the ^{233}U. Similar possibilities arise in other fuel element designs where it is feasible to mechanically separate ^{233}U and thorium during some of the fabrication steps.

In the fuel cycle of interest, Th-^{233}U, the mode of fabrication depends upon the ^{232}U concentration of the fuel, its age, and whether virgin or recycle thorium, which contains ^{228}Th, is being used. The amount of fuel being processed, its concentration, and its proximity to the operator is also important. We have analyzed the effect of ^{232}U concentration on the type of facility which should be employed in the fabrication of HTGR fuel and Spectral Shift Control Reactor (SSCR) fuel.

In the analysis for the SSCR fuel, we used the flowsheet shown in Fig. 1. The SSCR fuel element has approximately 200 fuel rods containing $(U\text{-}Th)O_2$ in an 8-in.-square array. Each fuel rod is approximately 0.4-in. in diameter and clad with 0.025-in.-wall Zircaloy-2 tubing. The fuel element is designed for mechanical assembly. The basic structure is an open cage assembly into which the fuel rods are simply inserted; no welding or brazing of the structure after loading of fuel rods is required. To perform the shielding calculations and determine the mode of fabrication, the fuel element fabrication facility was divided into three zones.

Zone 1. Bulk oxide is received from the fuel reconstitution facility and prepared for loading in the fuel rods.

Zone 2. Fuel rods are loaded, end capped, and inspected.

Zone 3. Fuel rods are autoclaved, placed into the preassembled fuel element framework, and inspected.

ORNL-DWG 64-6935

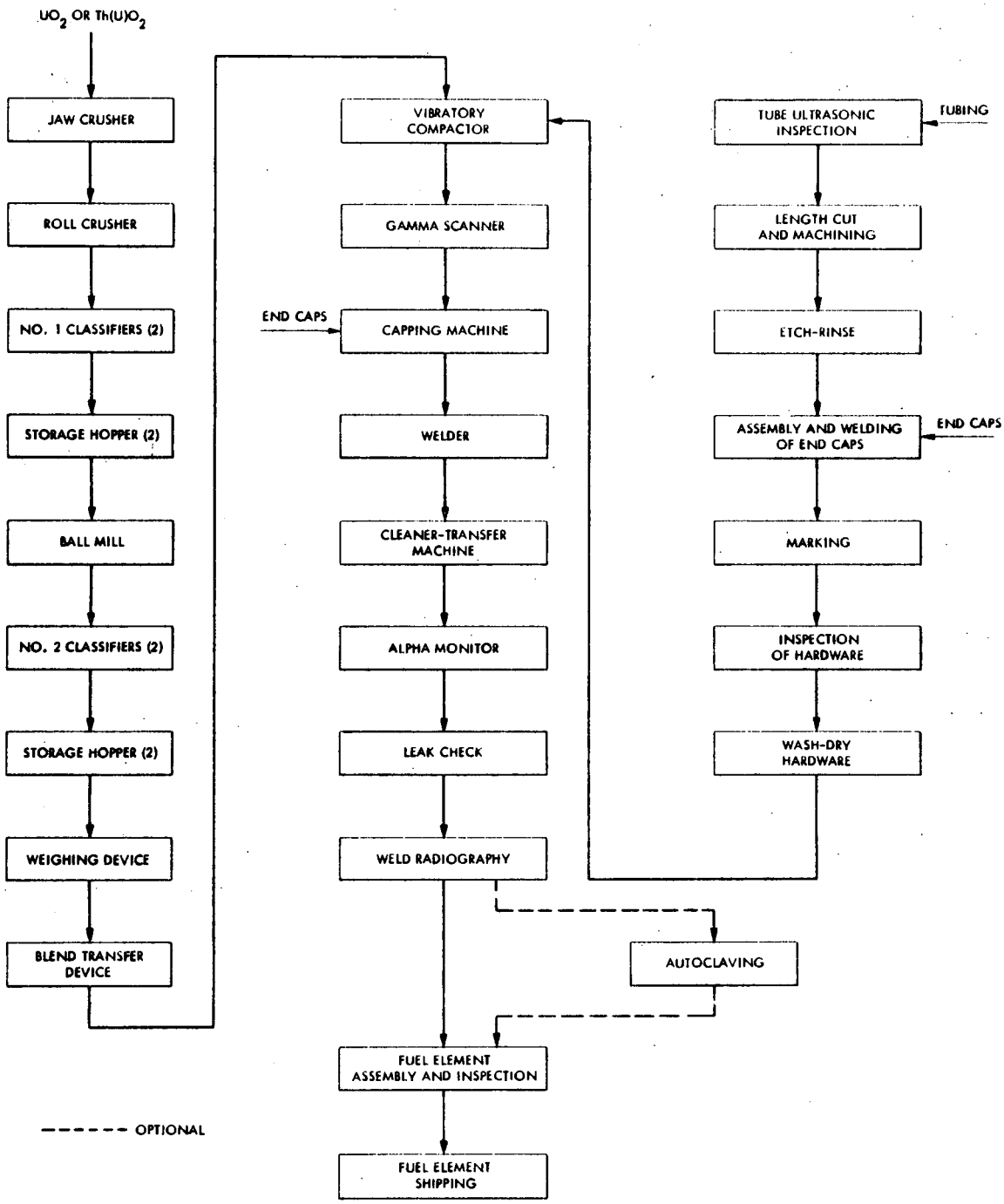

Fig. 1. Flowsheet for Fabrication of SSCR Fuel Elements.

Typical material flow rates for fabrication of the SSCR fuel element are shown in Table 1. It is notable that material holdup in Zone 3 is high because of the necessity of storing fuel rods containing different enrichments for loading into a single fuel element. We used the fuel element design shown in Fig. 2 in the analysis for the HTGR fuel element. The element has a diameter of 4 1/2-in. and has ten equally spaced 3/4-in.-diam holes in the cross section between the outside diameter and the 3/4-in. inside diameter. These holes are filled with fuel bodies consisting of an aggregate of coated fuel particles held together by a graphite matrix. The fuel element is 20 ft in overall length and has two identical subassemblies, each having an active fuel length of 7 1/2 ft. The fuel assemblies can be fabricated separately, can be attached to either a reflector assembly, or a fission-product trap assembly, and can be joined by the central coupling to form a complete fuel element. The flowsheet used is shown in Fig. 3. We considered both discrete particles of UC_2 and ThC_2 and particles of $(U\text{-}Th)C_2$. For fabrication of the HTGR fuel element, the facility was divided into three zones.

Zone 1. The oxide microspheres are received from the fuel reconstitution facility and converted to carbide and inspected.

Zone 2. The fuel particles are coated with pyrolytic carbon and inspected.

Zone 3. Compacts are prepared, inspected, and loaded into the graphite sleeves. Finally, two fuel segments are assembled together with end pieces, inspected, and shipped to the reactor site.

Typical material flow rates for $(U\text{-}Th)C_2$ particles are shown in Table 2; those for UC_2 particles in Table 3.

The following assumptions were made in calculating the shielding requirements for all of the plants.

1. The time between solvent extraction and receipt of material at the fuel element fabrication plant is five days.

2. A major cleanup of the equipment and enclosures is performed after five working days.

3. No substantial quantity of the material is located closer than 1 ft to the enclosure wall.

Table 1. SSCR Material Location, Quantity, and Age in Fabrication Plant

	Plant Capacity (kg heavy metal/day)			
	60	230	930	3700
Zone 1				
(1) In-process material at a given time, kg	20	20	50	175
(2) Time since material received from sol-gel plant, hr	3	3	3	3
(3) Material held up in equipment, kg	3	3	3	3
(4) Time since hold-up material received from sol-gel plant, days	5	5	5	5
Zone 2				
(1) In-process material at a time, kg	64	64	173	340
(2) Time since material received from sol-gel plant, hr	8	8	8	8
(3) Material held up in equipment, kg	3	3	3	3
(4) Time since hold-up material received from sol-gel plant, days	5	5	5	5
Zone 3				
(1) In-process material at a given time, kg	475	475	900	1325
(2) Time since material received from sol-gel plant, days	12	4	2	1
(3) Hold-up material in any element, kg	3	3	3	3
(4) Time since hold-up material received from sol-gel plant, days	14	10	8	8

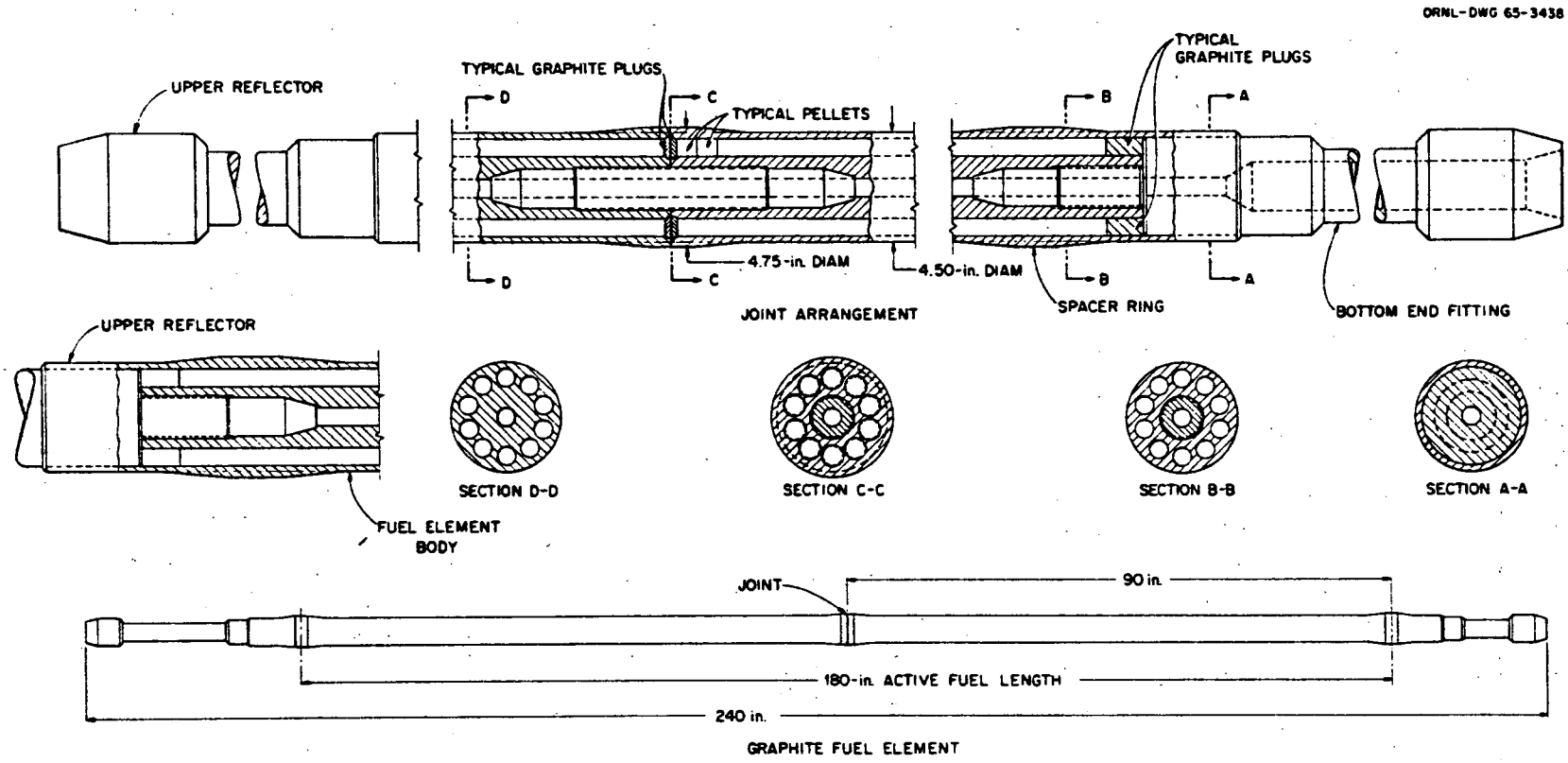

Fig. 2. A Reference Design for an HTGR Fuel Element for Remote Fabrication.

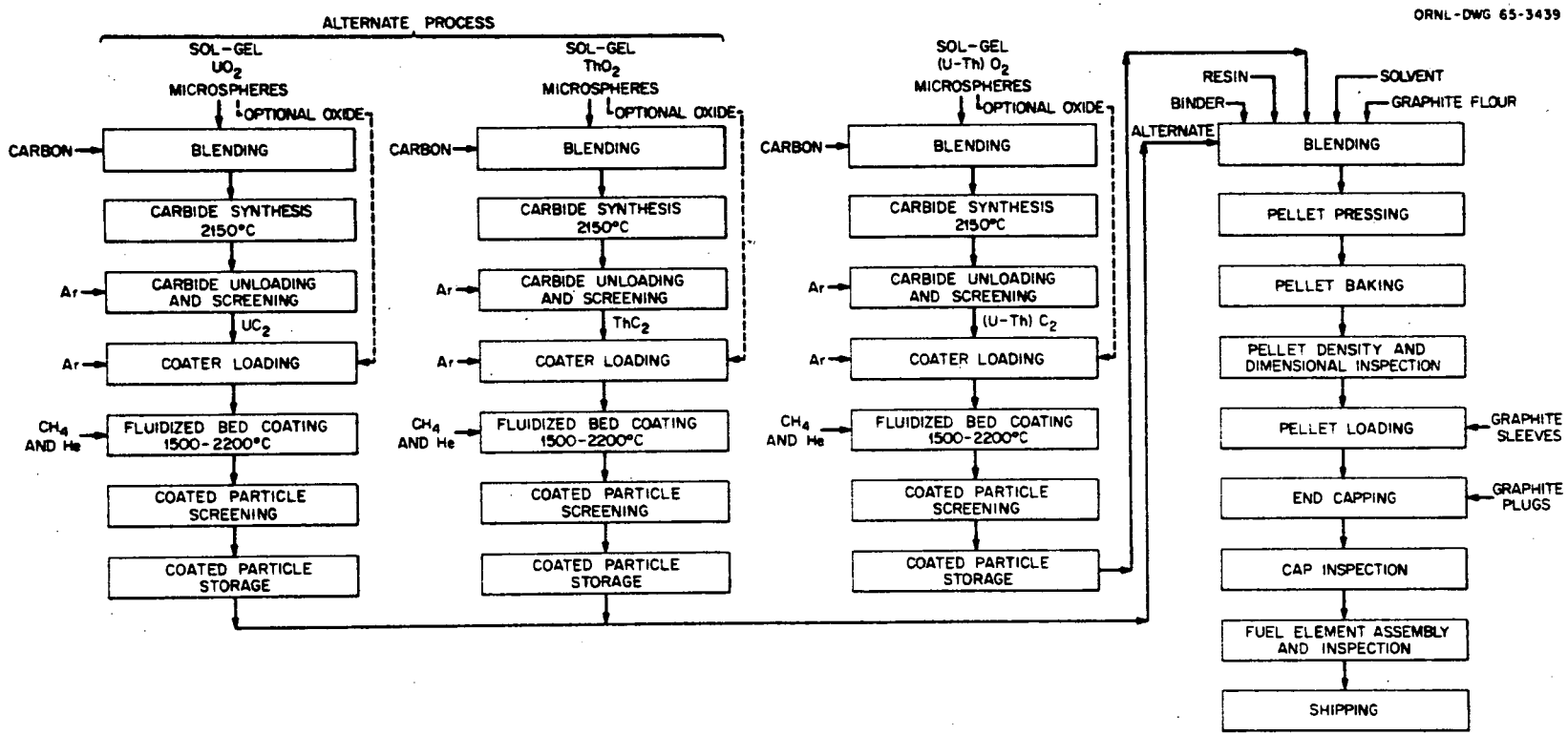

Fig. 3. Flowsheet for Fabrication of HTGR Fuel Elements.

Table 2. Material Location, Quantity, and Age in Fabrication Plant Processing $(U\text{-}Th)C_2$

	Plant Capacity (kg heavy metal/day)			
	60	230	930	3700
Zone 1				
(1) In-process material at a given time, kg	22	88	352	1408
(2) Time since in-process material received from sol-gel plant, hr	16	16	16	16
(3) Material held up in equipment, kg	3	3	3	3
(4) Time since hold-up material received from sol-gel plant, days	5.7	5.7	5.7	5.7
Zone 2				
(1) In-process material at a given time, kg	20	80	320	1280
(2) Time since in-process material received from sol-gel plant, hr	26	26	26	26
(3) Material held up in equipment, kg	3	3	3	3
(4) Time since hold-up material received from sol-gel plant, days	6	6	6	6
Zone 3				
(1) In-process material at a given time, kg	15	30	60	60
(2) Time since in-process material received from sol-gel plant, days	1.7	1.3	1.3	1.2
(3) Hold-up material in any element, kg	3	3	3	3
(4) Time since hold-up material received from sol-gel plant, days	6.7	6.4	6.3	6.3

Table 3. HTGR Material Location, Quantity, and Age in Fabrication Plant Processing UC_2 and ThC_2

	Plant Capacity (kg heavy metal/day)			
	60	230	930	3700
Zone 1 (UC_2 only)				
(1) In-process material at a given time, kg	3	4	16	64
(2) Time since in-process material received from sol-gel plant, hr	16	16	16	16
(3) Material held up in equipment, kg	3	3	3	3
(4) Time since hold-up material received from sol-gel plant, days	5.7	5.7	5.7	5.7
Zone 2 (UC_2 only)				
(1) In-process material at a given time, kg	3	6	24	96
(2) Time since in-process material received from sol-gel plant, hr	26	26	26	26
(3) Material held up in equipment, kg	3	3	3	3
(4) Time since hold-up material received from sol-gel plant, days	6	6	6	6
Zone 3 (UC_2 + ThC_2)				
(1) In-process material at a given time, kg	15	30	60	60
(2) Time since in-process material received from sol-gel plant, days	1.7	1.3	1.3	1.2
(3) Hold-up material in any element, kg	3	3	3	3
(4) Time since hold-up material received from sol-gel plant, days	6.7	6.4	6.3	6.2

4. The amount of material retained in the equipment (on the walls, in crevices, etc.) during processing is 3 kg, but the material is released and continued in the process at five-day cleanup intervals.

5. The plant processes 110% of the quantity shipped to allow for internal rejection of product not meeting specifications.

Shielding was calculated for plants having daily processing capacities ranging from 10 to 3700 kg of heavy metal per day. Typical results of these calculations are summarized in Table 4. Unless otherwise indicated, the results are for combinations of virgin thorium and ^{233}U. As can be observed in the table, we have used approximately 3.5 in. of steel as a practical limit for semiremote fabrication because of the difficulty of working through a greater distance with glove hands or tongs. Also, radiation from sources requiring greater than 3.5 in. of steel would prohibit, or at least greatly inhibit, contact maintenance of equipment. In all of the results, the shielding is calculated to limit body exposure to 1 mr/hr. The data in Table 4 show the limit of semiremote fabrication for SSCR fuel to be approximately 5 ppm ^{232}U in heavy metal, that for HTGR fuel containing $(U\text{-}Th)C_2$ particles 2 to 5 ppm depending upon the plant capacity, and that for discrete particles of $UC_2 + ThC_2$ only 1 ppm. It is notable that the discrete particles of UC_2 required greater shielding than $(U\text{-}Th)C_2$ particles because they are not diluted with thorium during the conversion and coating operations.

In fuel cycles where all the fuel is recycled, it is probable that the concentration of ^{232}U will exceed 5 ppm in heavy metal. We, therefore, conclude from our analyses that a remote plant is required for refabrication of such fuel.

This conclusion raises two serious questions: (1) How does one approach a satisfactory technical and economical solution to the problem of remotely fabricating fuel elements? (2) What are the cost penalties that one could expect for fabrication under such rigorous conditions? To answer these questions, it is appropriate that we consider the requirements and features of a remote fuel refabrication plant operating at a significant production rate.

Table 4. Shielding Requirements in Plants for Fabrication of ^{233}U-Bearing Fuels

^{232}U[a] (ppm)	SSCR Fuel			HTGR Fuel – $(U\text{-}Th)C_2$ Particles[b]			HTGR Fuel – $UC_2 + ThC_2$ Particles[c]		
	Plant Capacity (kg heavy metal per operating day)								
	230	930	3700	230	930	3700	230	930	3700
				Semiremote Fabrication (in. steel)					
1	0.8	1.2	1.4	1.2	1.9	2.0	2.8	2.8	3.2
2	1.7	2.1	2.3	2.0	2.7	2.9			
5	2.8	3.3	3.5	3.1					
				Remote Fabrication (in. concrete)					
2							12.3	12.3	13.5
5					12.8	13.9	15.9	15.9	17.2
10	12.2	13.8	14.8	13.2	15.6	17.0	18.7	18.7	20.0
20	15.0	16.7	17.8	16.0	18.5	20.0	21.4	21.4	22.8
50	18.9	20.6	21.8	19.6	22.2	24.1	25.1	25.1	26.5
100	21.7	23.5	24.8	22.4	25.0	27.2	27.9	27.9	29.3
500	28.4	30.3	31.8	28.8	31.6	34.3	34.3	34.3	35.8
1000	31.2	33.9	34.8	31.6	34.4	37.4	37.0	37.0	38.6
U-Th[d]	36.0	38.5	40.0	36.0	39.0	42.5	41.5	41.5	43.0

[a]Parts per million in heavy metal (U+Th).

[b]Each particle containing a mixture of ^{233}U and virgin thorium.

[c]$^{233}UC_2$ process alone in parts of the process.

[d]^{233}U-recycle thorium-assumptions.

Requirements and Features of the Remote Fuel Element Production Plant

The plant should incorporate automatic processing equipment insofar as practicable for several reasons. (1) The rate of unit processing has reached a value at which it is economical to invest in capital plant and minimize operating manpower expense. (2) The requirement for remote processing makes manual control of processing equipment extremely difficult. (3) Reproducibility and quality control are better assured by automatic systems.

The plant must provide substantial shielding from gamma irradiation depending on the isotopes being fabricated. The actual amount of shielding is not an important point since, if it is assumed that the process will proceed automatically, manipulation will not be used for normal operations.

The plant must offer suitable containment for the isotopes being fabricated. Generally, fuel refabrication operations can be divided into two categories according to the degree of contamination of the environment which can be expected from them: (1) contaminated fabrication that includes operations in which the fuel material is not completely contained in cladding; and (2) clean fabrication that includes operations in which the material is contained. These two categories of operation require two different types of shielded work areas. The work area for contaminated fabrication must be hermetically sealed and ventilated for control of particulate contamination.. The probability of spreading particulate contamination during clean fabrication operations is minimal; therefore, adequate ventilation for cooling of the equipment and for a contingent contamination incident must be provided, but no other precautions are necessary.

These categories of refabrication allow two general methods of equipment maintenance. The equipment used in contaminated fabrication would require completely remote maintenance, unless the work area could be decontaminated to an extent that protected personnel could enter the area. The most likely possibility for repair of equipment components is

that the components will be decontaminated and removed to a gloved maintenance area. Personnel can enter the cell and directly maintain equipment in a clean fabrication cell after removal of gamma-radiation sources.

Need for Processing Equipment Simplicity

It is desirable that all processes for fabrication of nuclear fuels be simple. In the case of remote fabrication of fuel elements, simple processes of equipment are not only desired, but mandatory, for several reasons. (1) The complexity of any operation tends to be magnified when that operation is done remotely. (2) The performance of fabrication operations, many of which are performed by hand in conventional nuclear facilities, are inherently difficult in remote facilities. (3) Repair of equipment in remote facilities is extremely difficult.

Requirements for Simplicity in Fuel Element Design

The design of fuel elements should be such that (1) the number of remote operations required is an absolute minimum and (2) the operations required are reasonably straightforward and easily accomplished. Also, fuel element designs should be optimized for minimum fuel fabrication costs. For example, the reduction of the number of pieces of hardware which must be handled per kilogram of fuel usually effects economies in fuel fabrication operations.

SELECTION OF SIMPLIFIED PROCESSES AND OPTIMUM FUEL ELEMENT DESIGNS

Now that certain requirements have been set forth for refabrication plants, we can discuss some approaches to the objectives of simplification and minimal cost.

Importance of Fuel Element Design

The fuel element design will, of course, determine the process and the degree of inspection which is required for the fuel elements. The designer must carefully consider the need for certain specifications as well as the geometry of the fuel element. Two fuel elements[9] as examples will illustrate this point; the SSCR fuel element designed by the Babcock and Wilcox Company and the advanced HTGR element by General Atomic.*

The SSCR fuel element was designed for vibratory compaction and for mechanical assembly of the fuel rods into a fuel bundle. The fuel element assembly scheme consists of pushing loaded fuel rods into a prepositioned and assembled lattice which has been constructed outside the fuel fabrication plant. This is a significant improvement over the operations involved in the manufacture of a brazed fuel element assembly.

In any rod-bundle design, there are a number of parameters which greatly affect cost; such as, type of fuel material, fuel diameter, fuel length, fuel density, type cladding, clad thickness, and number of fuel rods in an assembly.[10] Figure 4 illustrates the results of independent variation of some of these parameters over an extensive range. These curves relate to an advanced PWR-type fuel element of rod-bundle design fueled with low enrichment UO_2 pellets. All of these effects are due to the number of pieces which must be handled per kilogram of fuel during fabrication. Obviously, the fuel element designer can, by judicious selection of geometry and dimensions consistent with core thermal performance requirements, minimize costs.

One concept[11] for an advanced HTGR fuel element is that of loose particles contained in a graphite body. This, of course, considerably shortens the process in that the fabrication of graphite bodies containing dispersed fuel particles is eliminated. The fuel particle spheres in the HTGR element are coated with pyrolytic carbon. As shown in Fig. 5, costs are affected substantially by the particle diameter and the coating thickness which is selected for a particular fuel element.[12] Over the

---

*Division of General Dynamics.

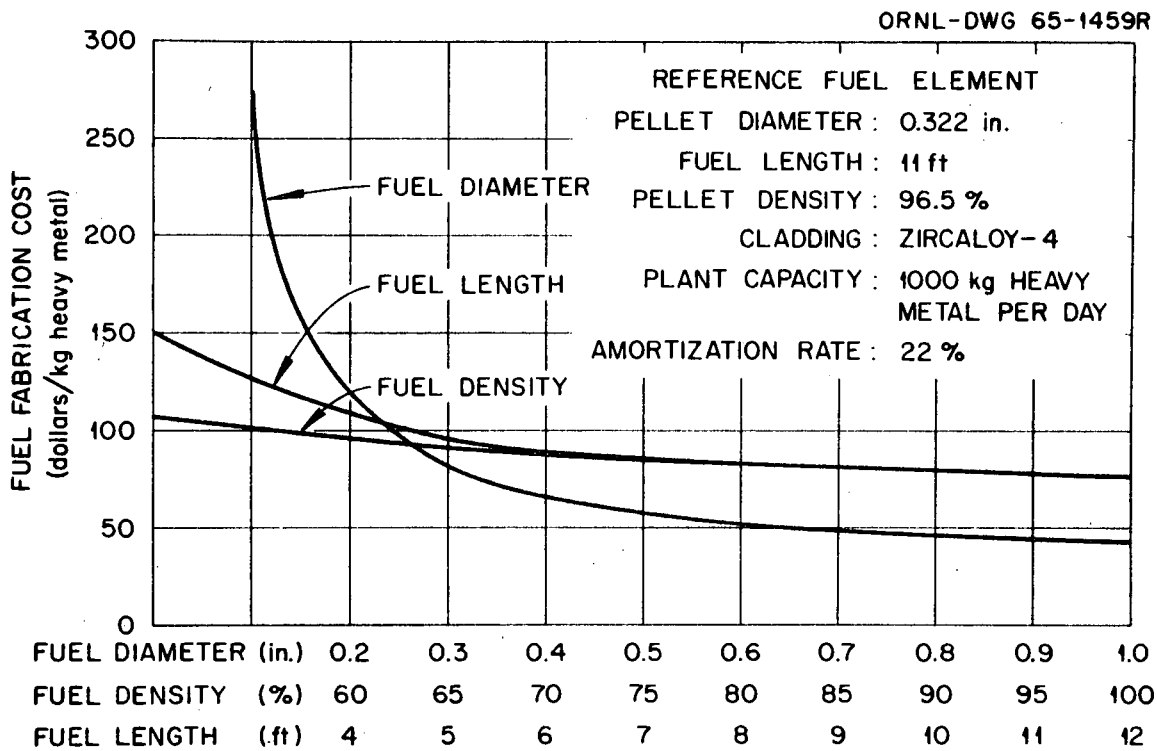

Fig. 4. Effect of Fuel Element Design Parameters on Cost for the Oxide Bundle-Type Fuel Element.

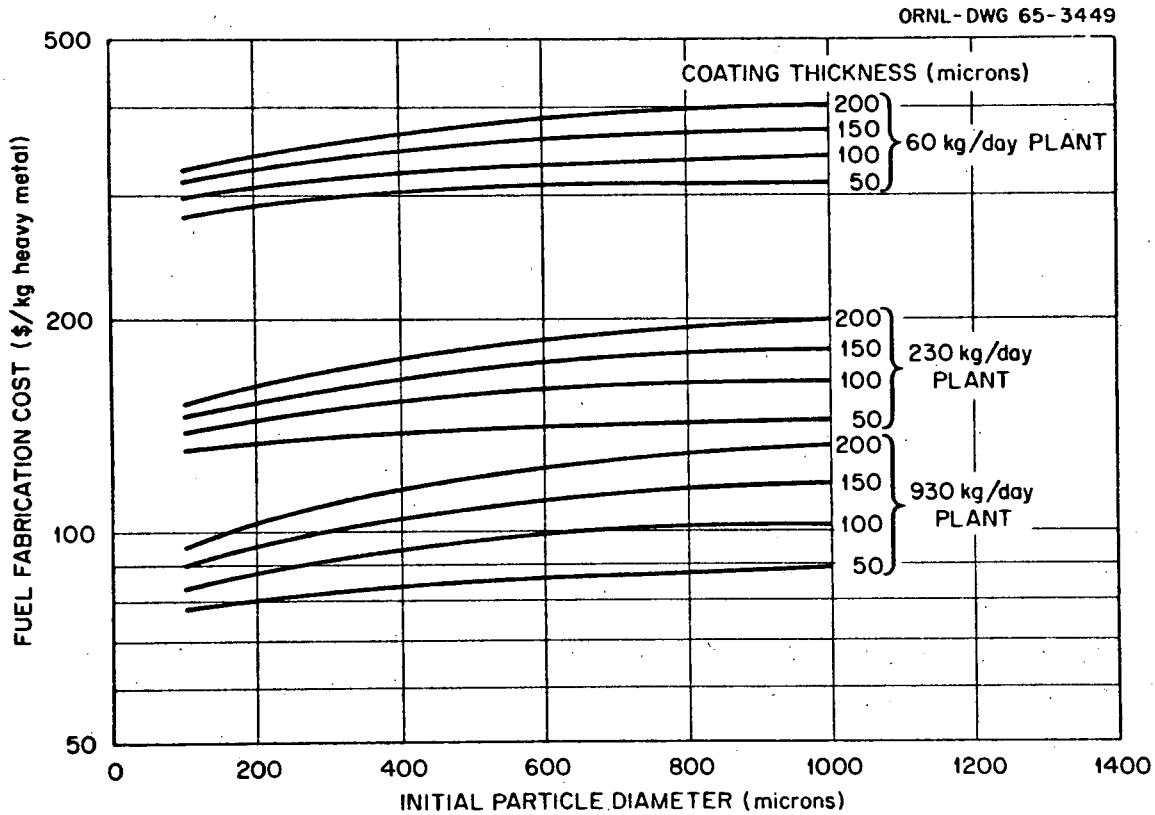

Fig. 5. Effect of Variations in Particle Diameter and Coating Thickness on the Cost of Fabrication of HTGR Fuel Elements.

range shown in the figure, the cost of fabrication increases with increasing particle size and initial particle diameter. In the process, a fluidized bed is used conventionally for coating the fuel particles. In such beds, for larger particles a much increased gas velocity is required to fluidize the particles; there is poor gas-solid contact; the particle motion characteristics change; and there might be increased maintenance due to sooting. This analysis could be negated by the development of more efficient devices for coating larger particles. The explanation for the effect of coating thickness is straightforward; one simply has to apply more carbon, but at a specified rate of deposition.

Another economy would be the use of coated-oxide microspheres instead of carbide. Other factors, such as the amount of fuel per fuel element, the number of holes per fuel element, and the length of the fuel element, would also have a bearing on fabrication costs.

Simplified Processes

Process steps selected should be short, easy to operate, and control; and they should have a high degree of utilization of the material put into the process. That is, there should be little recycle of material within the process. We shall use two examples to illustrate several points.

Process for Metal-Clad Oxide Fuel Elements

First, in fabricating metal-clad oxide fuel bundles there are several basic methods of consolidating fuel and introducing it to fuel tubes; these are pelletizing, extrusion, swaging, and vibratory compaction. From the standpoint of remote operation, pelletizing operations have two drawbacks. (1) Although pelletizing has been extensively used, centerless grinding of pellets is still required to meet the usual dimensional tolerances. (2) High-temperature sintering operations are required for densification of pellets. The material from the grinding operation creates a substantial waste and recycle problem. The pelletizing step does, however, have the advantage of mature technology and of adaptability to mass production. Extrusion techniques, although not fully developed,

have similar drawbacks; that is, a necessity for high-temperature sintering and for grinding. The process is, however, adaptable to higher production rates. We should also note that both pelletizing and extrusion require that the material be handled in several operations prior to the formation of green fuel bodies. Swaging has been extensively investigated as a method for consolidating powders but has not yet seen large-scale use because of difficulties in determining whether cladding quality has been affected by the working that occurs during swaging. Even without this effect, swaging has not proved to be substantially cheaper than pelletizing operations.

Vibratory compaction is a method which has been under extensive investigation during the past few years. At ORNL, we have produced 1100 fuel rods in a pilot demonstration of the fabrication of ^{233}U-Th oxide-bearing fuel rods.[13-18] Fuel rods were fabricated at a rate of 10 to 15 per day using the bulk oxide-vibratory compaction route. Approximately 900 of the rods, 1/2-in. in diameter and 46-in. in length, and 200 shorter, 18-in. long, but otherwise identical, rods were fabricated in a semiremote, lightly shielded (4.5-in. steel) facility, known as the Kilorod Facility. During the production, an average density of 90% of theoretical was obtained using Th–3 wt % ^{233}U oxide. The vibratory compaction process used has the advantage of utilizing almost 100% of the material charged to the process.

It was specified that (1) each rod have a fuel density of ±2% of the average density for the entire shipment and (2) that the density within a fuel rod at any position be within ±2% of the average for that fuel rod. To meet this specification, a mixture of coarse and fine powders consisting of 55% –6 +16 mesh and 45% unclassified fines were produced. The density variation along the length of the fuel rods was determined by a gamma-scanning operation using a 1/8-in. x 3/8-in. gamma beam, which was done immediately after vibratory compaction. During the early operations in the facility, the recycle rate between the compaction and gamma-scanning steps was quite high; nearly 20%. In the later campaigns, the recycle between the two steps because of insufficient homogeneity reached a low of less than 1%.

There were, however, mechanical difficulties with the pneumatic vibratory compactor. It required more maintenance than any other item of equipment in the process line, largely due to the breakage of components of the compaction machine. The vibratory compactor was the rate controlling machine in the process; the performance of the complete step for a single rod required approximately 17 min.[18] Unless techniques are developed for simultaneous vibration of a number of fuel rods, one faces the proposition of having a large number of vibratory compactors in a fuel fabrication plant of large capacity. Because the sol-gel process produces dense oxide suitable for vibratory compaction very cheaply and because the difficulties with the vibratory compactor can probably be overcome, we believe it to be the most economical method of consolidating material in oxide metal-clad fuel bundles under remote conditions.

It should be noted that we had little difficulty in the Kilorod Facility with the remainder of the process steps after initial operation.

Fueled-Graphite Process

Two steps in the process require extensive consideration if the costs of fabricating fueled-graphite elements are to be reduced. One is the technology for making spherical particles of either oxide or carbide. The second is the process for pyrolytic-carbon coating of these microspheres. Heretofore, the technology for making spherical particles has consisted of various mechanical methods of consolidating combinations of the solid materials UO_2, ThO_2, and carbon and then treating these at high temperature to complete the necessary reactions and to densify the material. These methods invariably involve tedious techniques which become more complicated when special operating conditions are imposed by recycle fuel. Therefore, an objective of ORNL has been to simplify the manufacture of spherical particles.

We believe the sol-gel process[19] meets this objective. Clinton[20] at ORNL has demonstrated on a pilot scale the preparation of thorium-uranium microspheres which can be used as oxide or converted to carbide. Following the flowsheet shown in Fig. 6, the microspheres are prepared by dispersing the sol at room temperature in an immiscible organic

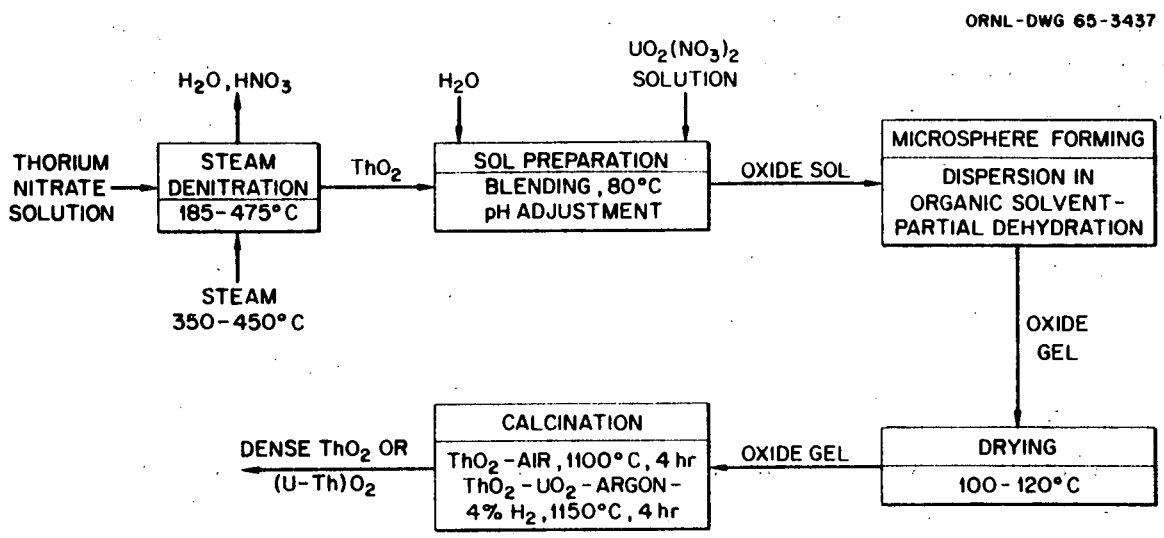

Fig. 6. Flowsheet for Preparation of Oxide Microspheres by the Sol-Gel Process.

liquid which has some solubility for water. The sol droplets must be suspended in the organic phase until enough water is extracted from the aqueous sol to cause gelation. After drying, the gel microspheres are calcined at 1150°C to complete the preparation of dense (99.4% of theoretical is typical) oxide microspheres. Microspheres produced by this method can be directly converted to carbide $(U\text{-}Th)C_2$ at 2150°C.[21]

The coating operation accounts for 25% of the cost of fuel fabrication in a plant capacity of 60 kg/day and 38% in plants at 3700 kg/day.[12] Therefore, to reduce costs, one should strive to increase the efficiency of the coating step. At ORNL, we are investigating methods of improving the efficiency of coating apparatus. These studies involve theoretical calculations of process conditions required in fluidized beds and rotary-drum coaters, as well as model studies on such devices.[22,23]

We are now preparing a pilot-scale facility for demonstration of improved methods of spherical particle preparation, conversion of oxide particles to carbide, and of coating with pyrolytic carbon. Most of this work is directed toward the scaleup of these processes. In the pilot facility, we shall accumulate data that we hope will lead to efficient remote fabrication processes and equipment. The facility is to process nonrecycle material.

OAK RIDGE NATIONAL LABORATORY PILOT-SCALE DEMONSTRATION

The absence of accurate data on costs and information on the technology for remote fabrication of fuel has led us to the construction of a facility in which we shall attempt the development of practical and economic solutions to refabrication problems. The facility is known as the Thorium-Uranium Recycle Facility (TURF).[24,25]

Thorium-Uranium Recycle Facility

The TURF will furnish the necessary space and shielding to perform all of the operations required for the processing of a spent-fuel element through the various phases of the fuel cycle. The facility has been sized to accommodate integrated recycle processes with equipment scaled down from

production plant sizes so that realistic and reliable bases for technical and economical analyses will exist. The design of the facility is such that two fabrication processes can be accommodated in the facility at one time.

The facility will be an irregularly shaped three-story building approximately 162-ft long, 124-ft wide, with a partial basement. The first floor, shown in Fig. 7, provides space for offices, change rooms, operating areas around the cell enclosures, a fuel storage basin, and a receiving area. The second floor provides space for chemical makeup, sampling of in-cell processes, cask decontamination, a shop for contaminated equipment, a development laboratory, and the mechanical and electrical equipment for the building. The third floor is a high bay area which includes the cell roof area and provides facilities for entry of cell services and cell access. The bay is provided with a 50-ton crane to handle casks large enough to accommodate fuel elements up to 12 ft in length. The basement will provide space for access to the equipment storage cell and for the vulnerable equipment associated with the chemical cell. The building acts as a second line of containment for the cell complex.

The primary zone of containment for the facility consists of six shielded cells and associated glove maintenance room and air lock, all of which are depicted in Fig. 8. Four of the cells provide the operating space for the process equipment while two provide supporting functions. The mechanical processing and chemical processing cells will be used for operations incidental to irradiated fuel recovery and reconstitution of fissile and fertile materials into forms suitable for use in fuel element manufacture. The contaminated fabrication cell provides space for fabrication operations through the point where all fissile and fertile material is contained and sealed in fuel cladding. The clean fabrication cell will be used for final assembly and inspection of fuel elements. The two large cells, mechanical processing and contaminated fabrication, are to be maintained remotely; the clean fabrication cell will be maintained by a contact means. The chemical cell has the flexibility of allowing either method of maintenance.

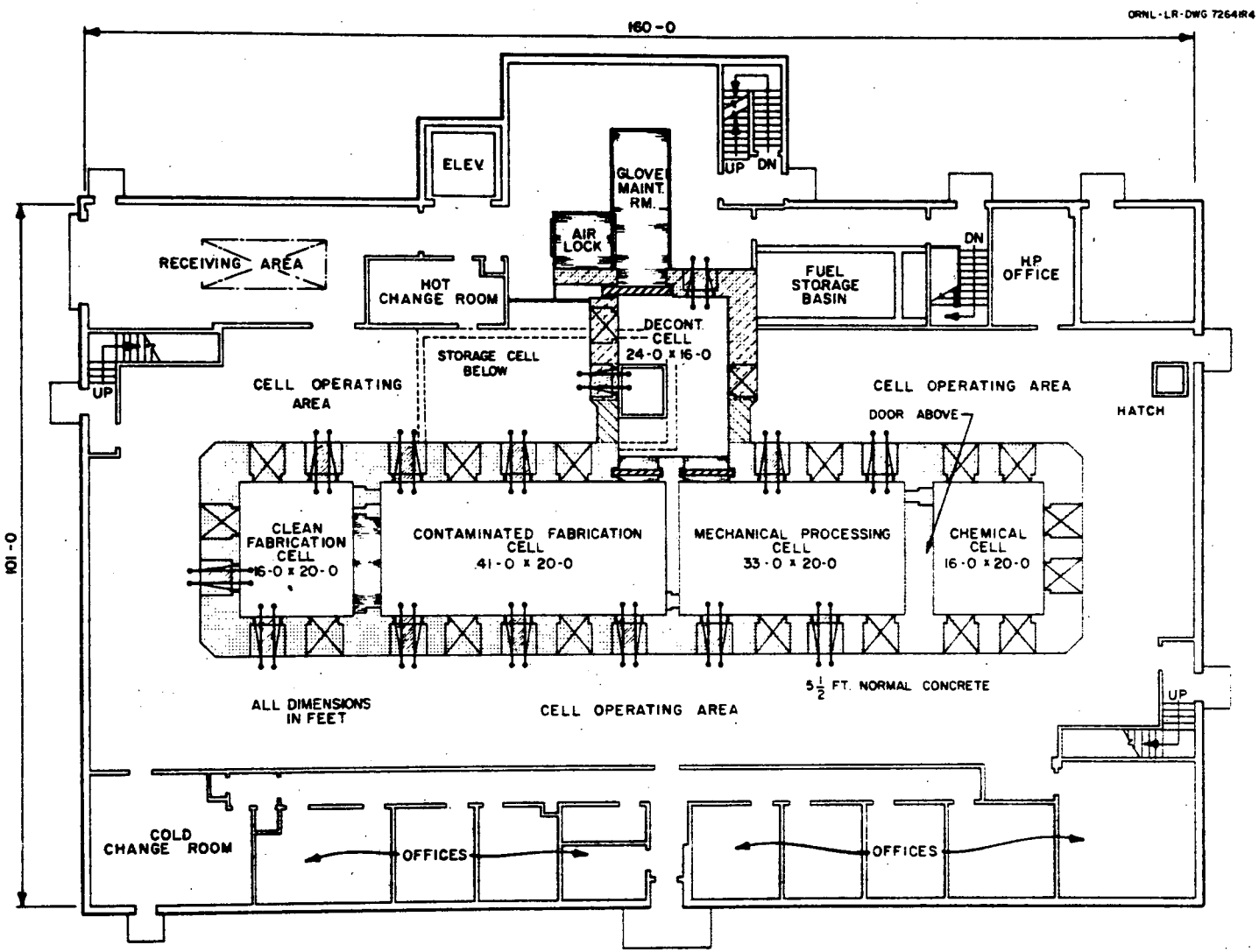

Fig. 7. Oak Ridge National Laboratory Thorium-Uranium Recycle Facility, First Floor.

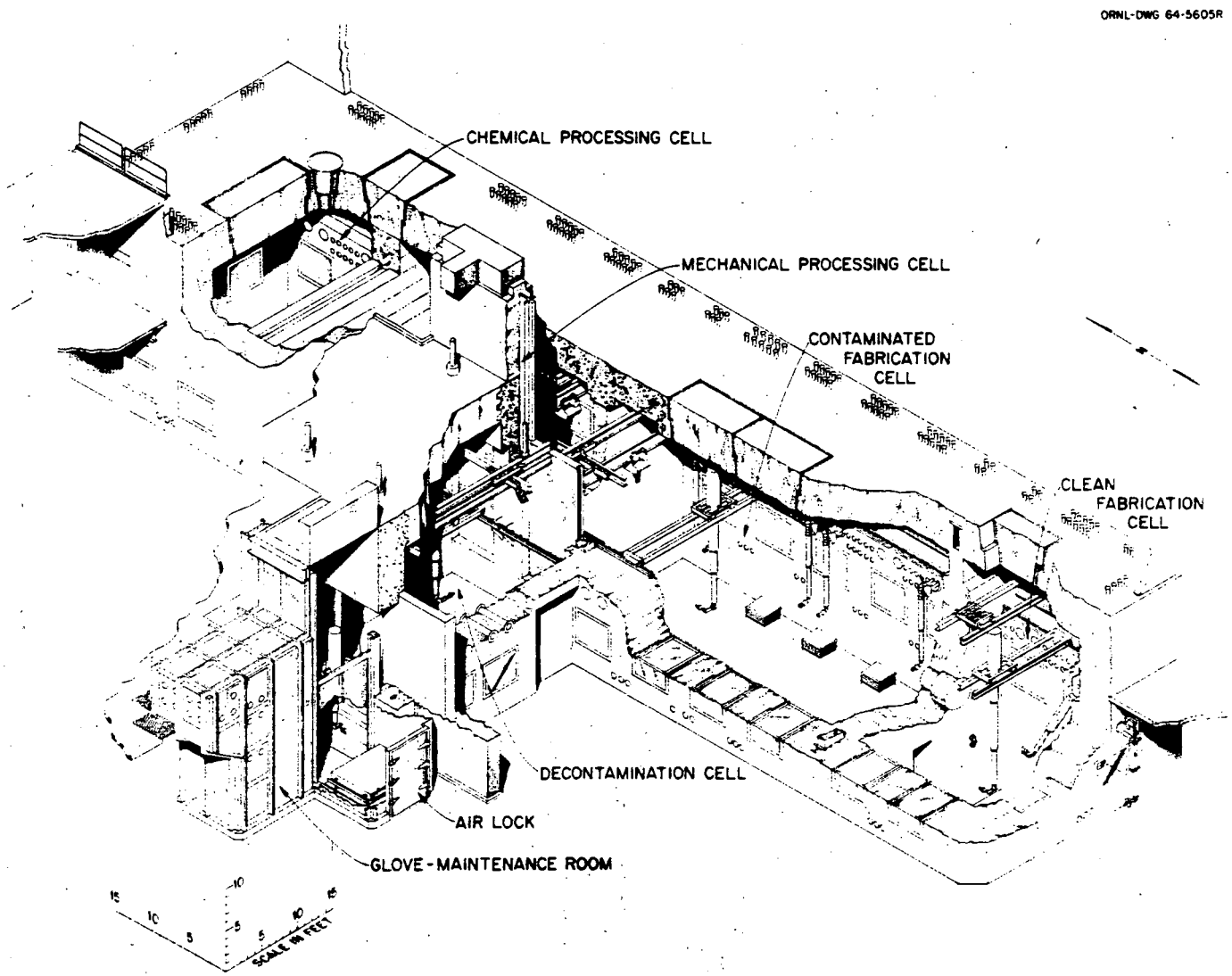

Fig. 8. Oak Ridge National Laboratory Thorium-Uranium Recycle Facility, Hot Cells.

All of the remote maintenance cells and the decontamination cell are lined with stainless steel. The service penetrations for all cells are provided with seals to confine radioactivity. Provisions have been made for future conversion to an inert atmosphere in the remote maintenance cells, the decontamination cell, equipment storage cell, and the glove maintenance room to permit processing of pyrophoric materials on a large scale.

The cells are capable of processing and refabricating fuel assemblies as long as 12 ft and containing as much as 35 kg of Th-U fuel irradiated to 25,000 Mwd/MT and decayed for 90 days. All of the operating cells are provided with the equivalent of 5 1/2 ft of normal concrete up to the electromechanical manipulator bridge level and 4 1/2 ft of concrete above this level.

Process and Equipment Design for TURF

We are now designing and constructing equipment for demonstration of remote fabrication processes in the TURF. The two processes involved are those for fabrication of metal-clad oxide fuel elements and fueled-graphite elements. Before discussing these two processes in detail and the equipment which we have designed, it would be appropriate to consider some of the criteria on which the process and equipment design is predicated.

Criteria for Process and Equipment Design

All of the general considerations which have been previously discussed were taken into account in the selection of processes and equipment designs. Therefore, we have tried to select a simple fuel element design, to select a process that is short as possible, and to reduce to a minimum the number of operations that must be done remotely. In addition to these general considerations, there are a number of details that should be mentioned.

The layout of the fabrication equipment was divided into contaminated and clean fabrication zones according to the degree of contamination that

is expected from the operations. These assignments greatly influence the type of equipment which should be designed for operation in the particular area. For example, each item of equipment located in the contaminated fabrication cell must be capable of being remotely installed, maintained, and removed by the cell remote handling system. Therefore, motor switches and complex mechanical components which are susceptible to wear, damage, or failure must be replaceable with a minimum of effort and without removal of the complete equipment item. Contact maintenance can be employed in the clean fabrication cell; therefore, provisions for maintenance by manipulators in the cell need not be extensive.

In the design of the equipment, we have used mild steel or aluminum extensively. Stainless steel has been used only for parts in direct contact with the fuel or where corrosive liquids or atmospheres dictate its use. Elastomers and organic materials have been used only where absolutely necessary; and, when used, provisions have been made for their easy replacement.

One of the principal problems involved in remote fabrication is that of transfer of materials between operational steps in the process scheme. At the onset of design, it was recognized that special handling systems would be required to precisely locate and to quickly transfer the article being fabricated from one operation to the next. Our analysis showed that if the general manipulation provided in the cell complex were used for transfer, the percent utilization of the process equipment would be extremely low; that is, the principal bottleneck in the process would be the general purpose manipulators. Therefore, we concluded that transfer of bulk solid material from one step to the next should be done by gravity flow through pipes or by enclosed powder conveyors and that transfer of fuel rods or other large components between operational steps should be accomplished with special transfer machines.

We can best illustrate our approaches to these problems by discussing the processes that we have designed and the concepts of the equipment for these processes.[26,27]

Fabrication of Oxide-Bearing Metal-Clad Fuel Bundles

One objective of the TURF is to demonstrate the feasibility of remote fabrication and assembly of metal-clad oxide fuel elements. The equipment is to be capable of accommodating fuel rods from 2 to 10-ft in length and 1/4 to 3/4-in. in diameter. The flowsheet for the oxide fabrication process is presented in Fig. 9; the layout of the equipment in Fig. 10. As can be seen in Fig. 10, fabrication and inspection equipment will be constructed in the form of a multistation system. Transfer of rods in the multistation system will be accomplished with two special fuel rod transfer machines. Versatility to accommodate the wide dimensional variation of the fuel rods will be achieved when possible by minor adjustment of components. However, in most cases, the cost of constructing versatile units has dictated that partial retooling or complete interchange of certain equipment items be done.

The design of equipment for powder conditioning prior to vibratory compaction has been relatively straightforward. In the Kilorod Facility, there was little mechanical difficulty with this equipment. Therefore, we have simply extended those designs to remote conditions by adding appropriate control systems and conveyors.

Particular attention was given to the vibratory compaction step. In the Kilorod Facility, the principal problem was the frequent maintenance required by the equipment. Also, as has been previously noted, the equipment had a low rate of unit processing which could give scaleup problems. Therefore, we attempted to design components in which stress risers were eliminated; and we attempted to design a unit which would vibrate two fuel rods simultaneously.

Another piece of equipment which has given particular difficulty in design is the gamma scanner. It is required to detect a 2% density variation over a 3/8-in. interval of rod length. The scanner consists of a collimated gamma beam, a NaI detection crystal, and a means of moving the beam along the length of the rod. When using either cobalt-60 source or cesium-137 source, the scanning speed is very slow; therefore, it was necessary to evolve a concept for multiple rod scanning.

The design of the equipment for all of the other operations has been relatively straightforward, and we envision no problem in scaling these

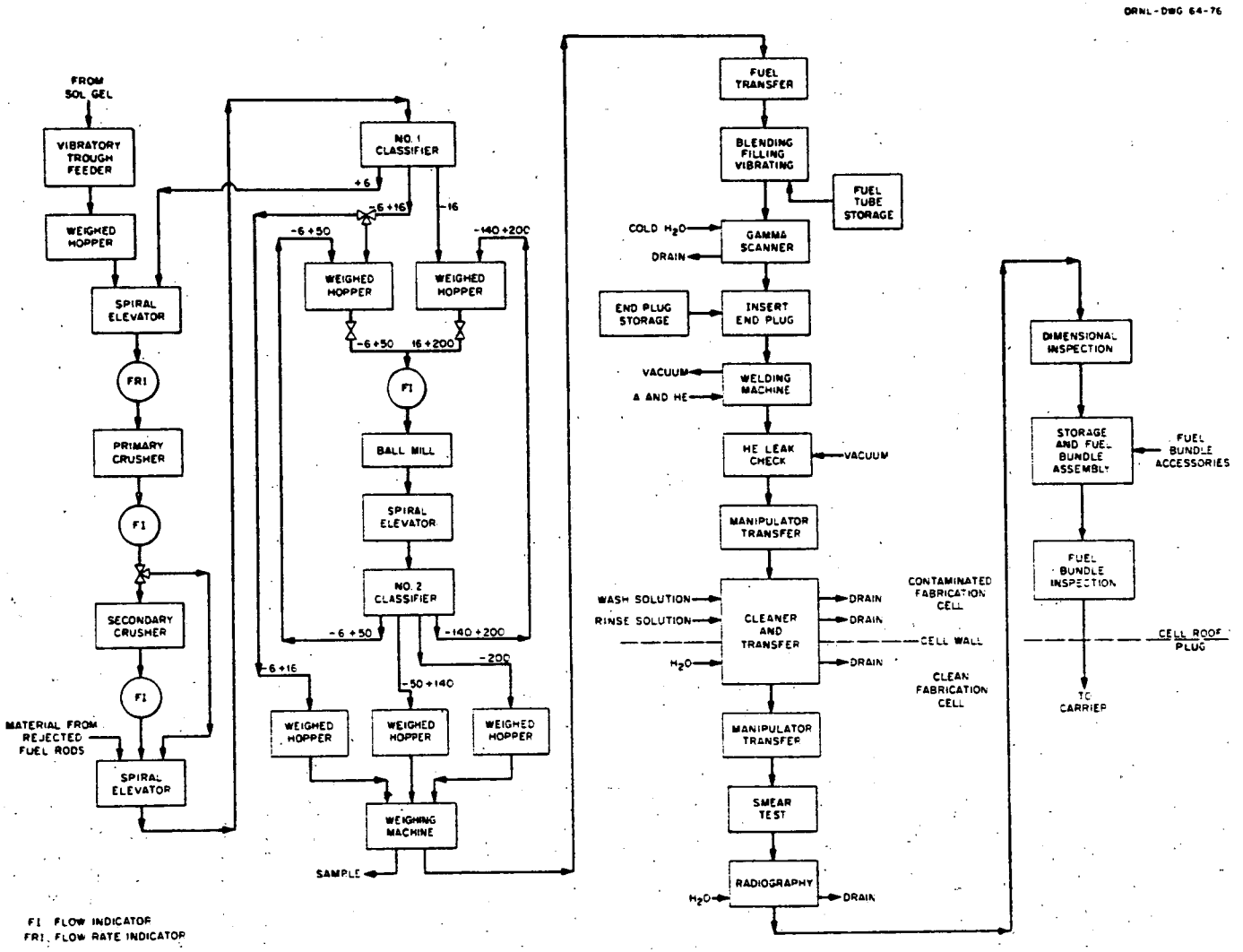

Fig. 9. Flowsheet for Fabrication of Metal-Clad Oxide Fuel Bundles in Thorium-Uranium Recycle Facility.

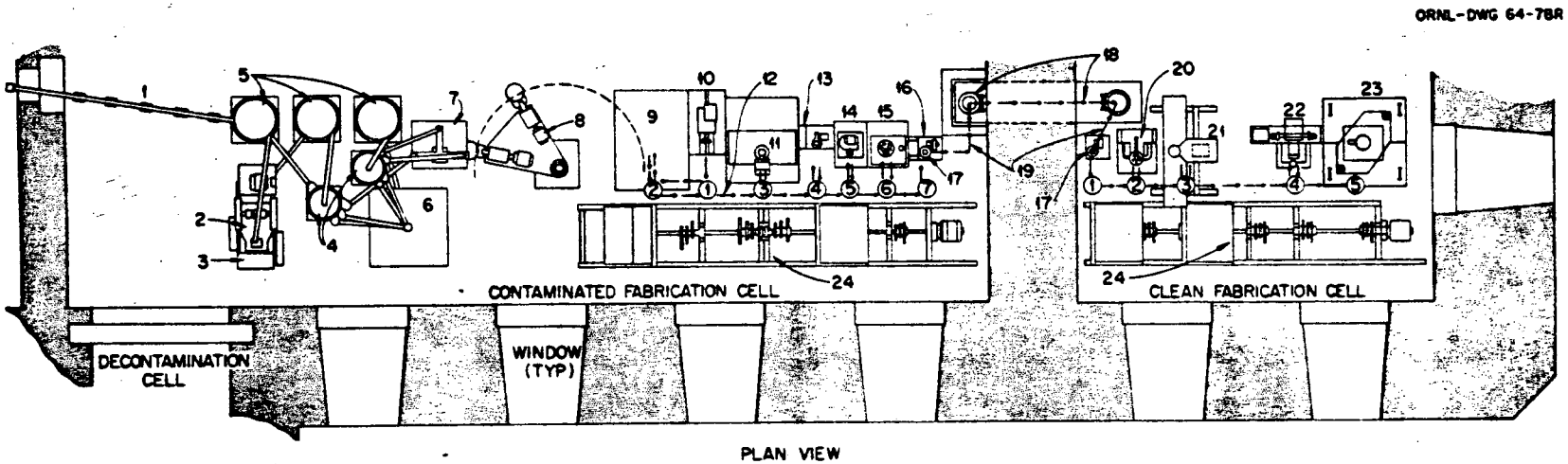

PLAN VIEW

① TRANSFER STOP POSITIONS
1. VIBRATORY TROUGH FEEDER
2. JAW CRUSHER
3. ROLL CRUSHER
4. CLASSIFIERS
5. VIBRATORY SPIRAL ELEVATORS
6. BALL MILL
7. WEIGHING MACHINE
8. FUEL TRANSFER MACHINE
9. VIBRATORY COMPACTOR
10. FUEL ROD MAGAZINE
11. GAMMA SCANNER
12. FUEL ROD FLOW
13. REJECT RACK
14. CAPPING MACHINE
15. WELDING MACHINE
16. INDEXING MACHINE
17. FUEL ROD BASKET
18. CLEANER TRANSFER MACHINE
19. TRANSFER IN FUEL ROD BASKET
20. LEAK CHECK MACHINE
21. WELD RADIOGRAPHY MACHINE
22. FUEL ROD DIMENSIONAL CHECK
23. FUEL ELEMENT ASSEMBLY AND INSPECTION MACHINE
24. FUEL ROD TRANSFER MACHINE

Fig. 10. Schematic Layout of Equipment for Fabrication of Oxide Fuel Bundles in Thorium-Uranium Recycle Facility.

to higher production rates. Most of the problems have been the ones which usually accompany design of such specialized equipment. Little attention has been given to the problem of fuel element assembly because of the lack of a firm fuel element design for fabrication. The assembly equipment would, of course, be greatly dependent upon the particular geometry and configuration of the fuel element to be assembled.

Fueled-Graphite Equipment

We are now conceptually designing equipment to be used for demonstration of refabrication technology for the fueled-graphite element depicted in Fig. 2. The flowsheet that is being used for the conceptual design is shown in Fig. 11. The equipment is to be a production type so that information gained will be applicable both technically and economically to a full-scale production facility. The equipment is to be sized for the production of approximately 35 kg of heavy metal per day. The principal barrier to this goal as far as capacity is concerned is the coating process. We do not yet have a solution to the relatively low processing rate which is inherent to the step.

A preliminary layout of the fabrication equipment for the fueled-graphite element in the TURF is shown in Fig. 12. This equipment will occupy approximately one-half of the space in the contaminated fabrication and clean fabrication cells. It is to be located on the opposite side of the cells from the oxide fabrication equipment. In the process, dryed sol-gel oxide microspheres are fed from the mechanical processing cell by a transfer conveyor; and then the material flows through various transfer conveyors from one step to another according to the sequence depicted on the flowsheet and in the equipment layout.

Because of the handling limitations imposed by the building clearances, a fuel element longer than 12 ft cannot be handled in the facility. Therefore, it will be necessary to accomplish the assembly operations for the fueled-graphite element in another facility or at the reactor site. This could be done by means of a central fitting of the threaded or bayonet type, and the joint could be sealed by an inductively heated braze joint.

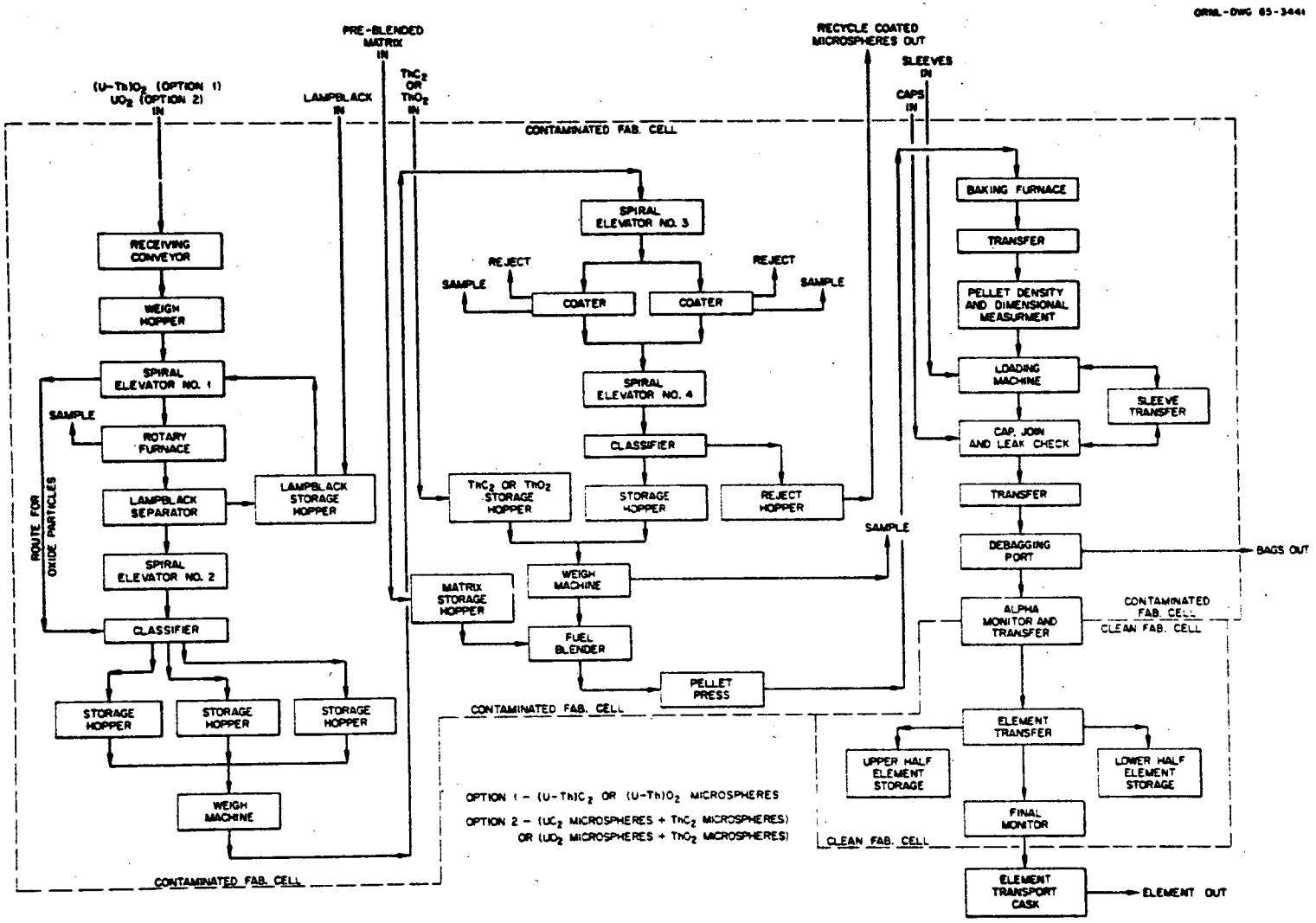

Fig. 11. Flowsheet for Fabrication of Fueled-Graphite Elements in Thorium-Uranium Recycle Facility.

ORNL-DWG 65-3442

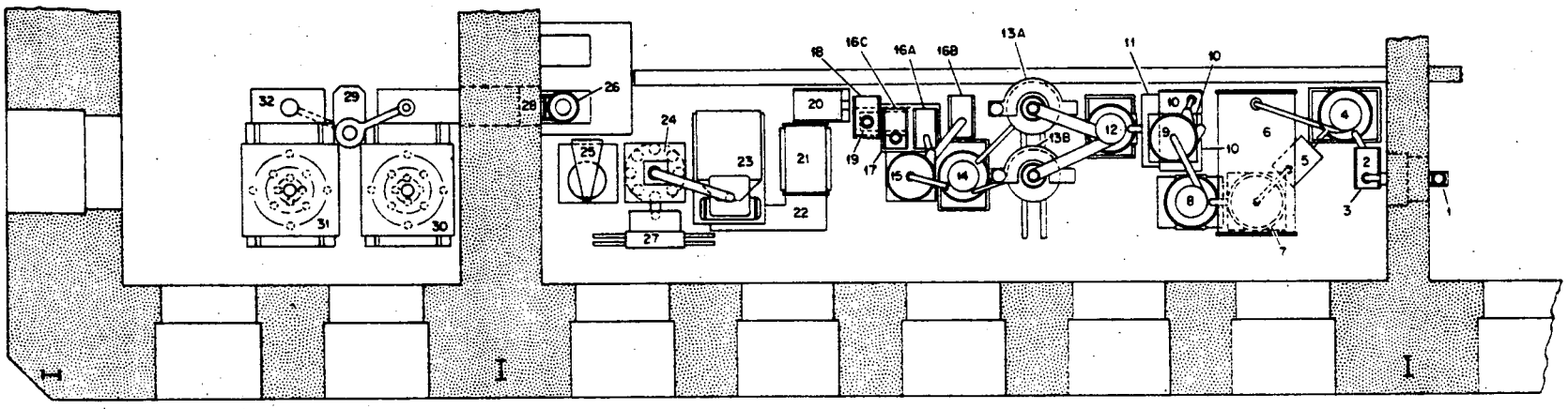

1. TRANSFER CONVEYOR
2. INVENTORY HOPPER
3. BATCH WEIGHING MACHINE
4. SPIRAL ELEVATOR NO. 1
5. LAMP BLACK STORAGE HOPPER
6. ROTARY CONVERTOR FURNACE
7. SEPARATOR
8. SPIRAL ELEVATOR NO. 2
9. AGGLOMERATE SEPARATOR
10. STORAGE HOPPERS (3)
11. BATCH WEIGHING MACHINE
12. SPIRAL ELEVATOR NO. 3
13A. COATER
13B. COATER
14. SPIRAL ELEVATOR NO. 4
15. AGGLOMERATE SEPARATOR
16A. STORAGE HOPPER (USEABLE MATERIAL)
16B. STORAGE HOPPER (REJECT MATERIAL)
16C. STORAGE HOPPER (Th PARTICLES INPUT)
17. BATCH WEIGHING MACHINE
18. STORAGE HOPPER (PREBLENDED GRAPHITE)
19. BLENDER
20. PELLET PRESS
21. BAKING FURNACE
22. UNLOADING CONVEYOR
23. PELLET DENSITY AND DIMENSIONAL INSPECTION
24. PELLET LOADING MACHINE
25. CAP, JOIN, AND LEAK CHECKING MACHINE
26. DEBAGGING PORT
27. FUEL ELEMENT TRANSFER MACHINE NO. 1
28. ALPHA MONITOR
29. FUEL ELEMENT TRANSFER MACHINE NO. 2
30. UPPER HALF ELEMENT STORAGE
31. LOWER HALF ELEMENT STORAGE
32. FINAL MONITOR

Fig. 12. Schematic Layout of Equipment for Fabrication of Fueled-Graphite Elements in Thorium-Uranium Recycle Facility.

All of the hardware which is used in the fabrication of the fuel elements will be loaded into magazines and brought into the cell by means of the cell manipulation and crane system.

Present Status of the Facility and Equipment

The construction of the TURF was started in April 1965 and is expected to be completed in early 1967. All of the oxide fabrication equipment has been conceptually designed, and a substantial portion of the detailed design of this equipment has been accomplished. Two items of oxide fabrication equipment, the vibratory compaction machine and the fuel transfer machine, are now nearing completion of construction.

We have just commenced the conceptual design of the equipment for fabrication of fueled-graphite elements. The accomplishment of detailed design of a great number of the items in this process line depends upon the performance of equipment now being readied for pilot operation and upon data obtained in other experimental programs which we have under way.

REFABRICATION ECONOMICS

From the experience gained in the operation of the pilot demonstration in the Kilorod Facility, the design of the TURF and its equipment and other studies we have conducted, we are in a position to estimate the cost of refabricating various fuel elements. Certainly, our estimates represent an extrapolation of existing technology; and they must be confirmed by additional and more accurate experience. But, they do suffice to give an indication of the cost penalties which might be incurred in the refabrication of fuel under various processing schemes. Therefore, let us consider two types of fuel elements and assume that reasonable refinement and improvement of fabrication processes have been accomplished.

Method of Analysis

In our economic analyses, one objective has been to do the complete analysis of the refabrication costs for any reactor fuel element. This objective requires a tremendous number of calculations. Therefore, during the past two years we have developed computer programs for the calculation of the cost of fabricating various types of fuel elements. The computer programs were written from data evolved in the following manner. The basic equipment required in the plant was selected and the uninstalled cost of this equipment was estimated. These costs were multiplied by various factors to determine the final capital cost of the fabrication plant. The multiplication factors were obtained from studies conducted jointly with construction engineers in which detailed plant layouts were examined for various sizes and types of fabrication plants. These studies yielded detailed breakdowns of such cost elements as building construction, equipment installation, instrumentation, engineering, and preoperation charges. In the computer programs, equations are included for each step in the process so that, upon description of the size and type of plant in which the fabrication is to occur, proper capital costs of that step can be obtained.

Operating costs were determined by similar methods. Material costs in the manufacture of the product were obtained through consultation with industrial manufacturers.

Cost of Preparing Fuel Materials by the Sol-Gel Method

As has been previously noted, we favor the use of sol-gel material as input for vibratory compaction and for the fueled-graphite process. The computer programs do not calculate the cost of preparing materials produced by the sol-gel technique, but the cost of producing such material has been estimated by Harrington and Chandler.[28] Their data are presented in Figs. 13 and 14 for bulk oxide material and spherical oxide particles, respectively. The cost of sol-gel material preparation is not included, unless specifically noted, in the fabrication costs presented in this paper.

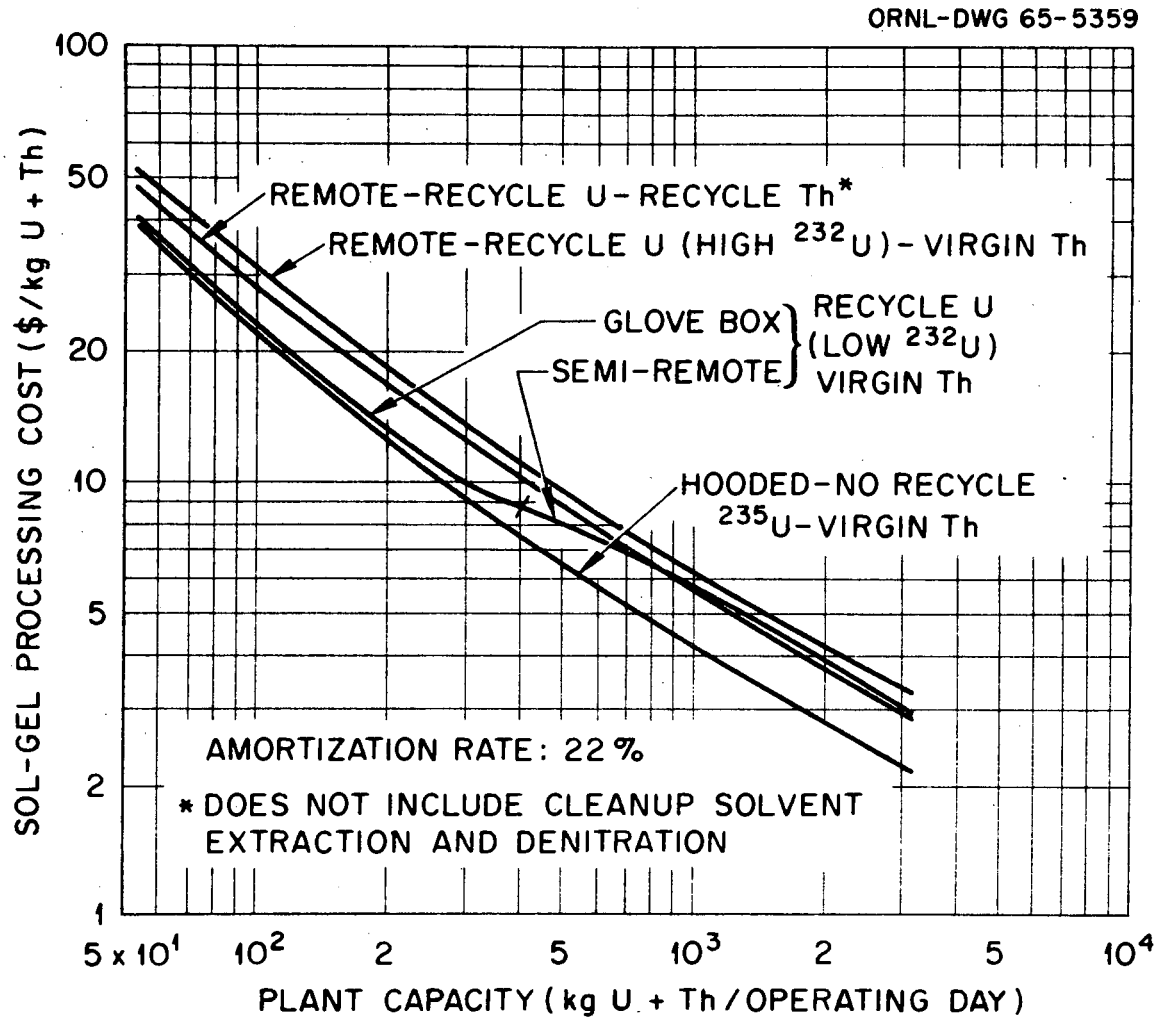

Fig. 13. Cost of Preparation of Oxides Charged by the Sol-Gel Process.

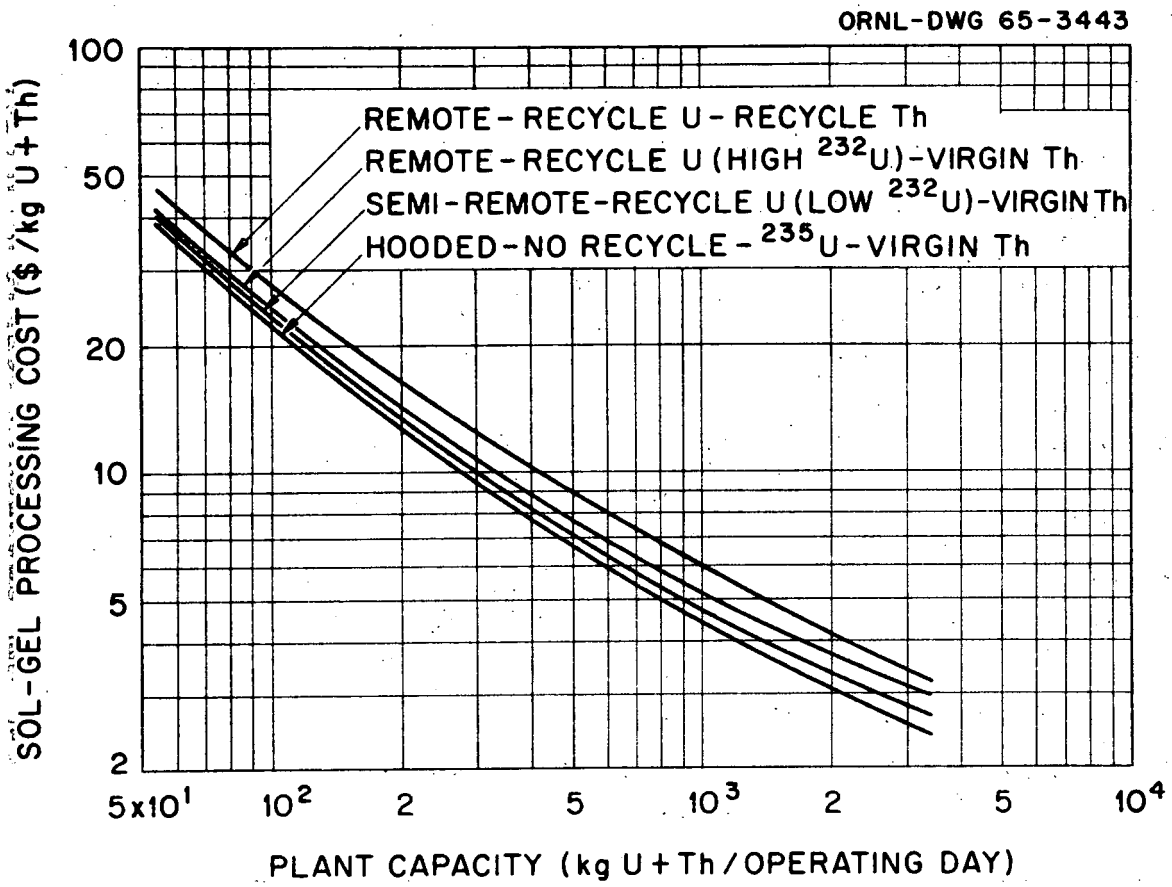

Fig. 14. Cost of Preparation of Oxide Microspheres by the Sol-Gel Process.

Basis for Calculation of Fabrication Costs

In calculating the fabrication costs which are presented in this paper, we made the following assumptions:

1. The fabrication plants would be single purpose; that is, only one particular type of fuel element would be fabricated.

2. The fabrication plants would operate 260 days per year, three shifts per day.

3. The plants would be amortized at an annual rate of 22% of the capital cost.

The data do not include charges for profit and for inventory or cost of source or fissionable material. Non-nuclear hardware costs are included.

Cost of a Typical Metal-Clad Oxide Fuel Element

The reference metal-clad oxide fuel element was the SSCR element described previously, and the flowsheet was that presented in Fig. 1. It was assumed that the fuel elements would be autoclaved. Figure 15 shows the effect of mode of fabrication and production rate on the cost of fabricating the SSCR-type fuel element. As can be seen, the production rate has a substantial effect on the cost of fabrication. This cost advantage cannot be realized unless sustained production of identical fuel elements is allowed. If dimensions or configurations are changed, then penalties would be incurred for retooling of the facility.

One comparison of interest in recycling fuel is that of the cost penalties incurred because of ^{232}U concentration in the fuel or because of ^{228}Th in recycle thorium. Figure 16 shows the effect of ^{232}U concentration on the cost of fabrication of the SSCR fuel element in four plants with different capacities, 60, 230, 930, and 3700 kg/day. It should be noted that we do not know exactly the transition point (the first break in the curves) between semiremote and remote operation; but, as can be seen from the curves it is not mandatory that these

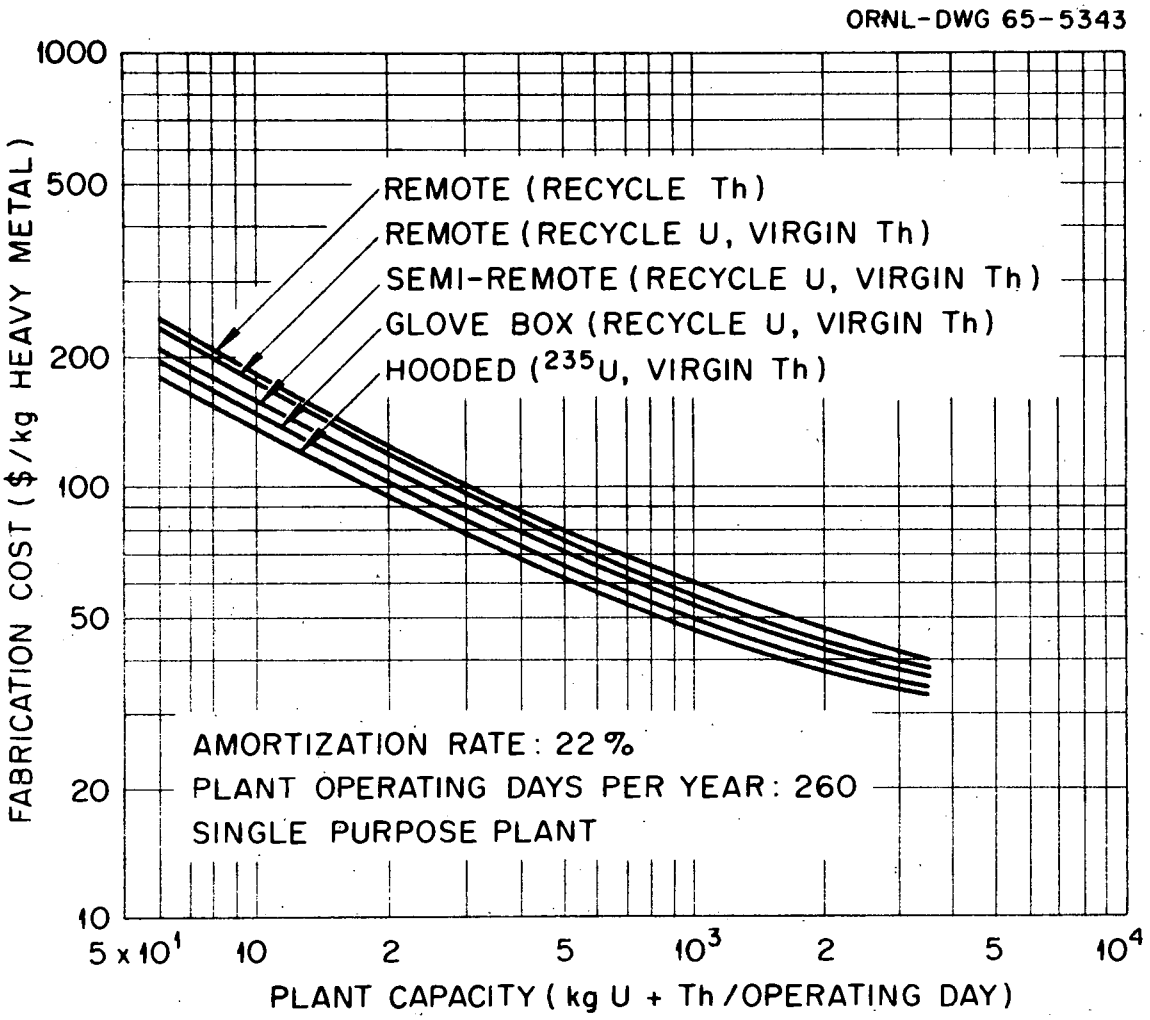

Fig. 15. Effect of Production Rate and Mode of Fabrication on the Cost of Fabricating SSCR Fuel Elements.

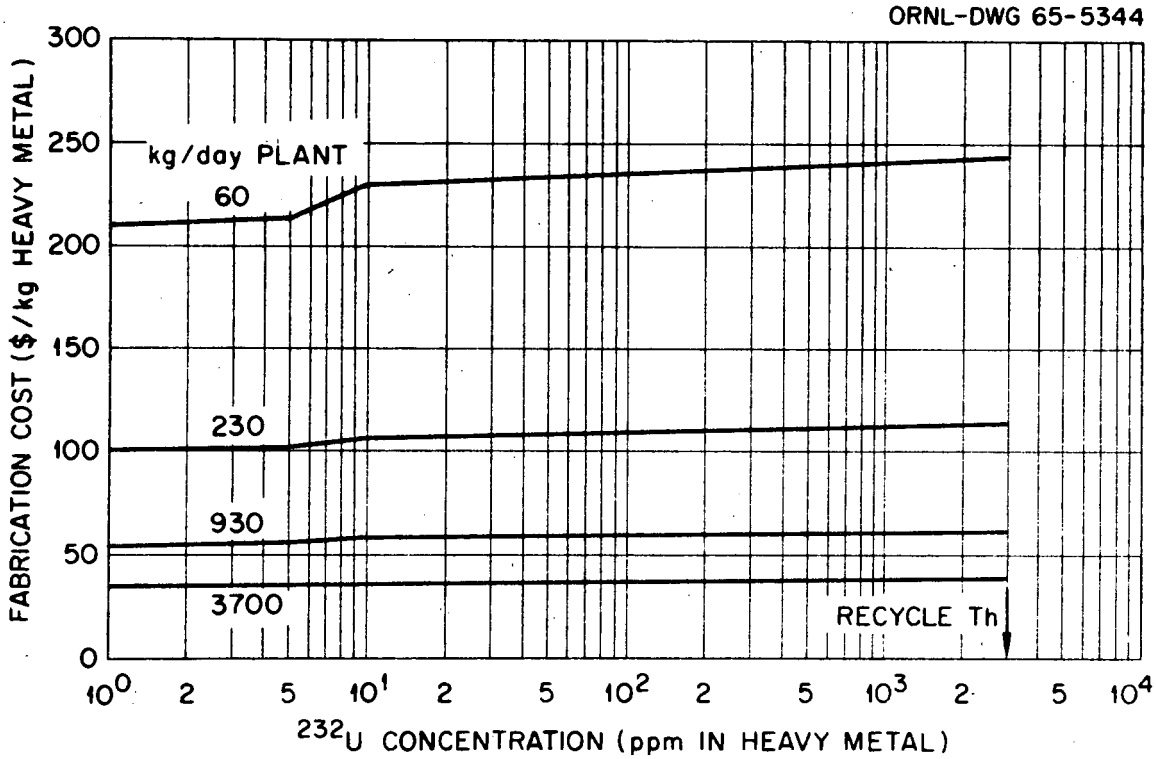

Fig. 16 Effect of ^{232}U Concentration on the Cost of Fabricating SSCR Fuel Elements.

points be determined precisely since the cost penalty incurred for remote fabrication over semiremote fabrication is not substantial. The recycle thorium case is depicted as being equivalent to 4000 ppm ^{232}U in heavy metal.

Cost of Fabrication of Fueled-Graphite Elements

The reference fuel element for calculation of fuel fabrication costs for the HTGR is shown in Fig. 2; the process used in Fig. 3. Figure 17 presents the effect of mode of fabrication and plant capacity on fabrication costs of fuel elements containing $(U\text{-}Th)C_2$ particles. Figure 18 presents the effect of ^{232}U concentration on fabrication costs at several different plant capacities. We should note that the cost penalty for recycling thorium as discrete particles is quite high at low production rates because of the necessity of maintaining two remote production lines, one for ^{233}U and one for thorium. These curves show that the cost relationships for the HTGR fuel element behave in a manner similar to those of the SSCR.

Cost Penalties for Remote Fabrication

Detailed analysis of the data used in the curves previously presented reveals the incremental cost factors which can be applied to similar fabrication processes to obtain the refabrication cost if the cost of the fabricating non-recycle fuel is known. Tables 5 and 6 present, respectively, the ratios of remote fabrication cost to hooded fabrication cost for SSCR and for the fueled-graphite element.

It is clear that the capital and operating factors decrease as plant capacity increases. The decrease in these factors with plant capacity is understandable because there are certain costs which are only first costs in remote operations. For example, health physics facilities are required in a 60 kg/day plant as well as a 3700 kg/day plant; and probably the facilities would be of the same type and very nearly the same size in both cases. Thus, we are observing the effect of more efficient utilization of certain service personnel and facilities in the larger plants.

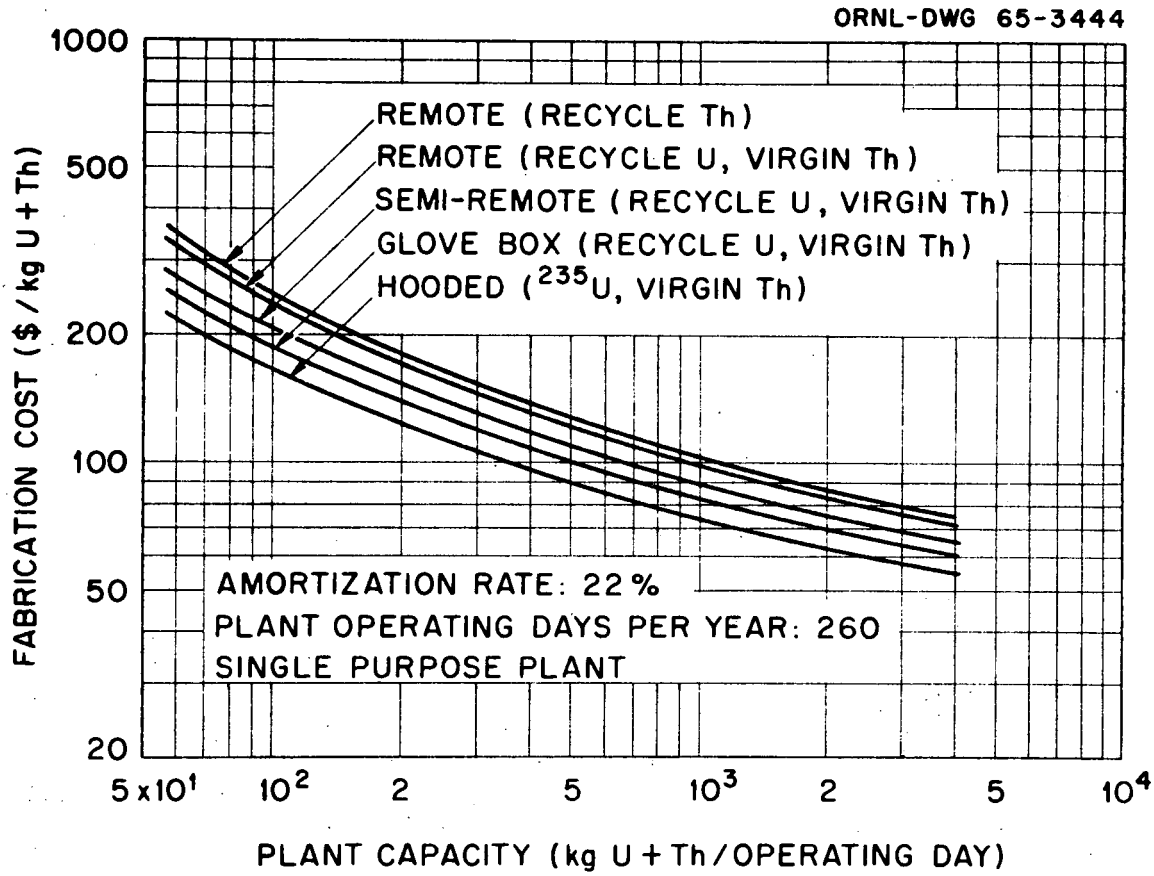

Fig. 17. Effect of Production Rate and Mode of Fabrication on the Cost of Fabricating Fueled-Graphite Elements.

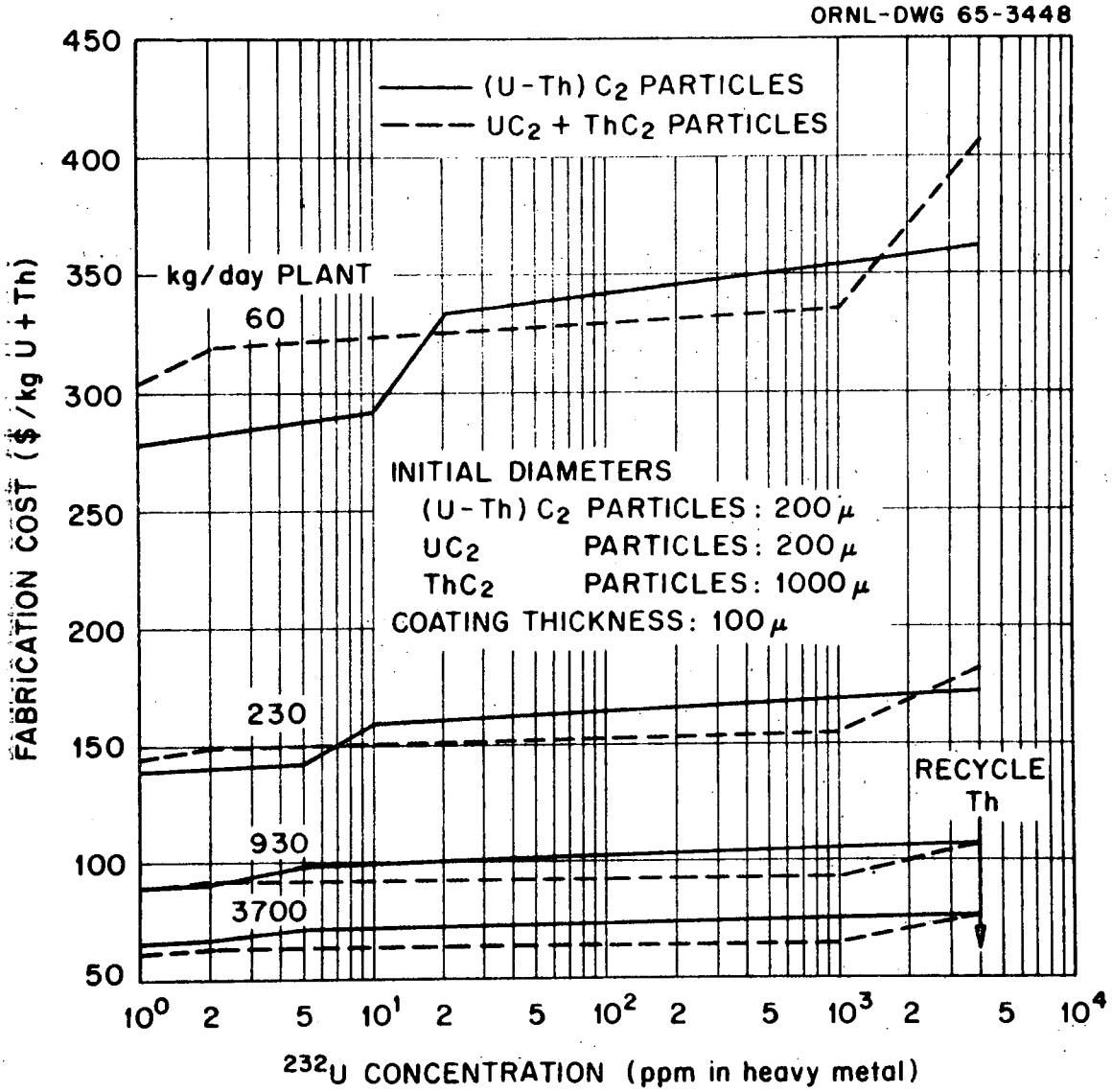

Fig. 18. Effect of ^{232}U Concentration on the Cost of Fabricating Fueled-Graphite Elements

Table 5. Cost Ratios for Comparison of Remote and Hooded Plants Fabricating SSCR Fuel Elements[a]

	Plant Capacity (kg heavy metal/day)			
	60	230	930	3700
	Ratio of Remote to Hooded Cost			
Capital	1.23	1.21	1.18	1.14
Operating	1.52	1.38	1.41	1.34
Total (including hardware)	1.29	1.21	1.15	1.10

[a]50 ppm ^{232}U in heavy metal; virgin thorium.

Table 6. Cost Ratios for Comparison of Remote and Hooded Plants Fabricating $(U\text{-}Th)C_2$ Particles[a]

	Plant Capacity (kg heavy metal/day)			
	60	230	930	3700
	Ratio of Remote to Hooded Cost			
Capital	1.87	1.79	1.73	1.75
Operating	1.47	1.43	1.37	1.37
Total (including hardware)	1.53	1.42	1.34	1.35

[a]50 ppm ^{232}U in heavy metal; virgin thorium.

The cost ratios for the SSCR fuel elements and the HTGR fuel elements are different. This is because a greater number of the operations involved in the fabrication of SSCR fuel elements are done external to the remotely operated facilities and do not incur the penalties for remote fabrication. This point can be further illustrated by Table 7, which presents the cost ratios for comparison of remote and hooded plants fabricating fueled-graphite elements containing discrete particles of UC_2 and ThC_2. In this particular case, a great portion of the fabrication (the conversion and coating of virgin thorium oxide) is done in facilities which are hooded. Therefore, the cost ratios are considerably lower than those presented in Fig. 6 for plants fabricating fueled-graphite elements containing $(U\text{-}Th)C_2$ particles.

Table 7. Cost Ratios for Comparison of Remote and Hooded Plants Fabricating UC_2 and ThC_2 Particles[a]

	Plant Capacity (kg heavy metal/day)			
	60	230	930	3700
	Ratio of Remote to Hooded Cost			
Capital	1.29	1.20	1.18	1.09
Operating	1.26	1.22	1.18	1.16
Total (including hardware)	1.24	1.16	1.12	1.08

[a]50 ppm ^{232}U in heavy metal; virgin thorium.

SUMMARY

The investigation of the technology for refabrication of bred fuel is just beginning. Much more evaluation needs to be done and much thought must go into systems required for recycle of such fuel. However, it is encouraging that the cost penalties associated with the refabrication of such fuel do not appear prohibitive.

Recycle fuel in the thorium-uranium-233 fuel cycle will very probably require remote fabrication. This probability dictates that the fuel element design be simple and be optimized for minimal cost and that the processes be simple, easy to operate, short, and capable of being done remotely. Furthermore, we must take into account the fact that some operations which typify the fabrication of non-recycle fuel are not economically feasible in remote situations.

In the cost analyses, we have been reasonably optimistic in that we have assumed the satisfactory solution of certain of the problems which have been previously mentioned. This does not mean, however, that present-day practices can be directly applied to remote fabrication technology. It is, therefore, clear that we must press development in a number of areas if we are to attain economical Th-^{233}U recycle technology for any particular type of reactor.

We are conducting a comprehensive program at the Oak Ridge National Laboratory aimed at meeting the objectives of economical recycle of fuel. With further development of the pilot-scale demonstration of methods for vibratory compaction and for preparation of particles for fueled-graphite elements, we should have a much better basis for the design of equipment for remote fabrication of fuel in the TURF. Once we have designed and operated equipment in the TURF, we shall have a much better basis than we do now for evaluation of the technical feasibility and cost of refabricating fuel elements of any particular type.

ACKNOWLEDGEMENT

Obviously, the work represented in this paper is the result of the efforts of a number of persons. We would particularly like to acknowledge the help of those who have made direct contributions: R. B. Pratt and J. D. Sease for their work in the engineering of the remote fabrication systems; T. N. Washburn for his assistance in the analysis of fuel refabrication economics; and R. L. Pilloton for valuable contributions to the economic and technical analyses for refabrication of fueled-graphite elements. Finally, we should note that all of these persons have made valuable contributions to the formulation of our programs and concepts for refabrication.

REFERENCES

1. A. B. Shuck and J. E. Ayer, "Engineering Considerations for Remote Refabrication of EBR-II Fuel Elements," Nucl. Sci. Eng., 12(3), 401–402 (March 1962).

2. J. C. Resson, M. J. Feldman, and L. Burris, Description and Proposed Operation of the Fuel Cycle Facility for the Second Experimental Breeder Reactor (EBR-II), USAEC Report ANL-6605, Argonne National Laboratory, April 1963.

3. H. C. Riches, Design Criteria for Fuels Recycle Pilot Plant, USAEC Report, HW-69666, Hanford Atomic Products Operation, June 28, 1961.

4. G. Schileo and L. R. Weissert, "A Pilot Plant for the Production of Th-U^{233} Recycle Fuels," paper presented at the VIII Congresso Nucleare of the Comitato Nazionale per L'Energie Nucleare, Rome, Italy, June 17–23, 1963.

5. J. K. Davidson, G. Orsenigo, A. Pedretti, and A. C. Schafter, "PCUT, A Program for Recycle of Power Reactor Fuel," Proceedings of the Thorium Fuel Cycle Symposium, Gatlinburg, Tennessee, December 5–7, 1962, USAEC Report TID-7650 (Book 1), Technical Information Division, pp. 285–332, 1963.

6. F. Fumagalli, P. Loizzo, O. Nepi, G. Orsenigo, and S. Russo, "The Uranium-Thorium Cycle in the Italian Applied Research Programmes for Thermal Reactors," paper presented at the European Atomic Energy Society Enlarged Symposium on Fuel Cycles for Power Reactors, Baden-Baden, Germany, September 9–14, 1963.

7. J. K. Davidson, O. Drolshagen, O. Nepi, G. Orsenigo, and A. C. Schafer, "The PCUT Facility for Reprocessing and Refabricating ThO_2-UO_2 Fuels," pp. 305–317 in VI Congresso Nucleare d:Roma, Il Ciclo Combustibile U-Th, Rome, Italy, June 1961.

8. A. B. Shuck, A. L. Lotts, and K. Drumheller, "The Remote Fabrication of Reactor Fuels," to be published in Reactor Technology Selected Reviews, 1965.

9. M. W. Rosenthal et al., A Comparative Evaluation of Advanced Converters, USAEC Report ORNL-3686, Oak Ridge National Laboratory, January 1965.

10. T. N. Washburn and D. A. Douglas, Jr., "Controlling Factors in Determining Fabrication Costs of Metal-Clad Oxide Fuel Elements," paper to be presented at 1965 Annual American Nuclear Society Meeting, Gatlinburg, Tennessee, June 21–24, 1965, (to be published).

11. Design Study Report for TARGET, USAEC Report GA-4706, General Atomic, 1964.

12. A. L. Lotts, D. A. Douglas, Jr., and R. L. Pilloton, Refabrication Technology and Costs for High-Temperature Gas-Cooled Reactor Fuels, USAEC Report ORNL-TM-1115, Oak Ridge National Laboratory, May 1965.

13. J. D. Sease, A. L. Lotts, and F. C. Davis, Thorium-Uranium-233 Oxide (Kilorod) Facility – Rod Fabrication Process and Equipment, USAEC Report ORNL-3539, Oak Ridge National Laboratory, April 1964.

14. A. L. Lotts, J. D. Sease, R. E. Brooksbank, A. R. Irvine, and F. W. Davis, "The Oak Ridge National Laboratory Kilorod Facility," Proceedings of the Thorium Fuel Cycle Symposium, Gatlinburg, Tennessee, December 5–7, 1962, USAEC Report TID-7650 (Book 1), Technical Information Division, pp. 351–383, 1963.

15. O. C. Dean, C. C. Haws, A. T. Kleinsteuber, and J. W. Snider, "The Sol-Gel Process for Preparation of Thoria Base Fuel," Proceedings of the Thorium Fuel Cycle Symposium, Gatlinburg, Tennessee, December 5–7, 1962, USAEC Report TID-7650 (Book 1), Technical Information Division, pp. 519–542, 1963.

16. C. C. Haws, Jr., "Pilot Plant Preparation of U^{233}-O_2-ThO_2 Shards by the Sol-Gel Method, Preparatory to Producing Powders by Vibratory Packing into Fuel Tubes," paper presented at the Powder Filled Uranium Dioxide Symposium, Worcester, Massachusetts, November 5–6, 1963 (to be published).

17. J. E. Van Cleve, Jr., and A. L. Lotts, "Operating Experience in a Semi-Remote Facility for Preparation of Fuel Rods Containing $(U^{233}, Th)O_2$, pp. 257–271 in Proceedings of the Twelfth Conference on Remote Systems Technology, San Francisco, California, 1964.

18. J. E. Van Cleve, Jr., A. L. Lotts, and J. J. Varagona, Time Study of Fuel Rod Fabrication in the Kilorod Facility, USAEC Report ORNL-3740, Oak Ridge National Laboratory (in publication).

19. D. E. Ferguson, O. C. Dean, and D. A. Douglas, Jr., "The Sol-Gel Process for the Remote Preparation and Fabrication of Recycle Fuels," A/Conf. 28/P/237, paper presented at the 3rd United Nations International Conference on the Peaceful Uses of Atomic Energy, Geneva, 1964.

20. S. D. Clinton, Chemical Technology Division Annual Progress Report May 31, 1964, USAEC Report ORNL-3627, Oak Ridge National Laboratory, pp. 163–176, 1964.

21. R. L. Pilloton and R. L. Hamner, "A Method for Preparing Dense Spherical Particles of Thorium and Uranium Dicarbides," paper to be presented at the 1965 Annual American Nuclear Society Meeting, Gatlinburg, Tennessee, June 21–24, 1965, (to be published).

22. R. L. Pilloton and A. L. Lotts, "Fluidized-Bed Characteristics in the Coating of Nuclear Fuel Particles," paper presented at the American Nuclear Society Meeting in San Francisco, California, November 30–December 3, 1964, (to be published).

23. R. L. Pilloton, H. J. Flamm, and A. L. Lotts, "The Development of an Improved Coating Furnace for Nuclear Fuel Particles," paper to be presented at the 1965 Annual American Nuclear Society Meeting, Gatlinburg, Tennessee, June 21–24, 1965, (to be published).

24. A. R. Irvine and A. L. Lotts, Criteria for the Design of the Thorium Fuel Cycle Development Facility, USAEC Report ORNL-TM-149, Oak Ridge National Laboratory, March 2, 1962.

25. A. R. Irvine and A. L. Lotts, "The Thorium Fuel Cycle Development Facility Conceptual Design," pp. 333–350 in Proceedings of the Thorium Fuel Cycle Symposium, Gatlinburg, Tennessee, December 5–7, 1962, USAEC Report TID-7650 (Book 1), Technical Information Division, 1963.

26. Status and Progress Report for Thorium Fuel Cycle Development for Period Ending December 31, 1963, USAEC Report ORNL-3611, Oak Ridge National Laboratory, (in press).

27. Status and Progress Report for Thorium Fuel Cycle Development for Period Ending December 31, 1964, USAEC Report ORNL-3831, Oak Ridge National Laboratory, (in press).

28. F. E. Harrington and J. M. Chandler, A Study of Sol-Gel Preparation Costs for SSCR and HTGR Reactors, USAEC Report ORNL-TM-1109, Oak Ridge National Laboratory, April 6, 1965.

DISTRIBUTION

1. G. M. Adamson
2. R. J. Beaver
3. L. L. Bennett
4. G. E. Boyd
5. R. S. Carlsmith
6. J. H. Coobs
7. F. L. Culler
8. J. E. Cunningham
9–18. D. A. Douglas, Jr.
19. D. E. Ferguson
20. J. H Frye, Jr.
21. W. O. Harms
22. F. E. Harrington
23–27. M. R. Hill
28–37. A. L. Lotts
38–87. IAEA Panel on "Utilization of Thorium in Power Reactors," Meeting, Vienna, Austria, June 14–18, 1965
88. H. G. MacPherson
89. E. L. Nicholson
90. A. R. Olsen
91. R. C. Olson
92. R. E. Pahler, AEC-Wash.
93. P. Patriarca
94. A. M. Perry
95. R. L. Pilloton
96. R. B. Pratt
97. J. T. Roberts
98. M. W. Rosenthal
99. J. L. Scott
100. J. D. Sease
101. D. B. Trauger
102. J. M. Vallance, AEC-Wash.
103. J. T. Venard
104. T. N. Washburn
105. A. M. Weinberg
106. J. R. Weir
107. R. G. Wymer
108–109. Central Research Library
110. Document Reference Section
111–135. Laboratory Records Department
136. Laboratory Records, ORNL-RC
137. ORNL Patent Office
138–152. Division of Technical Information Extension
153. Research and Development Division-ORO