CENTRAL RESEARCH LIBRARY
DOCUMENT COLLECTION

150

OAK RIDGE NATIONAL LABORATORY LIBRARIES
3 4456 0548180 4

ORNL-3883
Special

SEMIANNUAL CONTRACT PROGRESS REPORT TO THE NATIONAL INSTITUTE OF ALLERGY AND INFECTIOUS DISEASES

MARCH 1 TO SEPTEMBER 15, 1965

CENTRAL RESEARCH LIBRARY
DOCUMENT COLLECTION
LIBRARY LOAN COPY
DO NOT TRANSFER TO ANOTHER PERSON
If you wish someone else to see this document, send in name with document and the library will arrange a loan.

OAK RIDGE NATIONAL LABORATORY
operated by
UNION CARBIDE CORPORATION
for the
U.S. ATOMIC ENERGY COMMISSION

LEGAL NOTICE

This report was prepared as an account of Government sponsored work. Neither the United States, nor the Commission, nor any person acting on behalf of the Commission:

A. Makes any warranty or representation, expressed or implied, with respect to the accuracy, completeness, or usefulness of the information contained in this report, or that the use of any information, apparatus, method, or process disclosed in this report may not infringe privately owned rights; or

B. Assumes any liabilities with respect to the use of, or for damages resulting from the use of any information, apparatus, method, or process disclosed in this report.

As used in the above, "person acting on behalf of the Commission" includes any employee or contractor of the Commission, or employee of such contractor, to the extent that such employee or contractor of the Commission, or employee of such contractor prepares, disseminates, or provides access to, any information pursuant to his employment or contract with the Commission, or his employment with such contractor.

ORNL-3883

Contract No. W-7405-eng-26

SEMIANNUAL CONTRACT PROGRESS REPORT

TO THE

NATIONAL INSTITUTE OF ALLERGY AND INFECTIOUS DISEASES

March 1 to September 15, 1965

N. G. Anderson and G. B. Cline

Biophysical Separations Laboratory, Biology Division,

Oak Ridge National Laboratory

OCTOBER 1965

Research jointly sponsored by the Vaccine Development Branch, National Institute of Allergy and Infectious Diseases, National Institutes of Health, Bethesda, Maryland, and the U. S. Atomic Energy Commission under contract with the Union Carbide Corporation.

OAK RIDGE NATIONAL LABORATORY LIBRARIES

3 4456 0548180 4

SEMIANNUAL CONTRACT PROGRESS REPORT

TO THE

NATIONAL INSTITUTE OF ALLERGY AND INFECTIOUS DISEASES

Title of Project:	Development of techniques for virus and viral subunit isolation from large volumes of tissue culture
For the Period:	March 1 to September 15, 1965
Responsible Investigators:	Dr. Norman G. Anderson Mr. George B. Cline
Name of Institution:	Biophysical Separations Laboratory Biology Division Oak Ridge National Laboratory
Address:	Building K-703 P. O. Box P Oak Ridge, Tennessee 37831
Interagency Agreement:	40-30-64
Supported by:	Research jointly sponsored by the Vaccine Development Branch, National Institute of Allergy and Infectious Diseases, National Institutes of Health, Bethesda, Maryland, and the U. S. Atomic Energy Commission under contract with the Union Carbide Corporation.

NOT FOR PUBLICATION

This information may not be released to other persons, quoted, or extracted for publication, or otherwise disseminated without permission of the Responsible Investigators or the Project Officer.

Inquiries concerning this report may be addressed to the Chief, Vaccine Development Branch, National Institute of Allergy and Infectious Diseases, National Institutes of Health.

Objectives

The objectives discussed in this semiannual report are part of a long-range study of the application of zonal centrifugation in virology and vaccine production. (Some of the objectives outlined below have been reported in part in previous semiannual reports.)

1. To develop a reliable continuous flow centrifugation technique of isolating infectious respiratory syncytial virus (RS) which would be useful as a production method.
2. To isolate the small particulates (subunits) remaining in the virus-free harvest fluid from the B-IX zonal rotor and examine them by sedimentation analysis in the analytical ultracentrifuge and by electron microscopy.
3. To determine the morphology of the intact virus and of the disintegration products of purified RS virus.
4. To develop a complete system for isolating adenovirus subunits free of nucleic acid.
5. To define the problems arising with virus isolation in contained systems, to determine centrifuge and component failure as a result of ethylene oxide sterilization, and to determine reliability of the present containment system.
6. To develop rotor systems for ultrahigh-speed rate-zonal and isopycnic-zonal centrifugation of proteins and nucleic acids.

7. To examine the problem of growing adenoviruses on a large scale in containment systems in conjunction with the existing zonal centrifuge containment systems.

Collaborative Research with Drug Firms

Abbott. — A joint zonal rotor evaluation program is being carried out in collaboration with Abbott Laboratories, North Chicago, Illinois, to determine the usefulness of the B-V and B-IX zonal rotors for rhinovirus isolation direct from harvest fluids. A joint preliminary study was done at Oak Ridge with ECHO 28 virus in the B-IX rotor using potassium citrate density gradient. Results of this study will be included in a separate report since all production and assay of the virus and viral antigens were carried out in the Abbott Laboratories.

Reports to us indicate that the B-IX zonal rotor gives a predictable cleanout of ECHO 28 virus from harvest fluid with recovery of the virus in a high state of purity. However, the 40,000 rpm operating speed of the B-IX is at the lower theoretical limit for efficient ECHO virus isolation with rotor systems of the B-IX configuration. Higher-speed continuous-flow-with-banding rotors are required which will permit flow-through rates of 4 to 6 liters/hr with better than 99% cleanout.

Eli Lilly. — A zonal rotor evaluation program is being carried out with the Eli Lilly Company to determine the usefulness of zonal rotors for routine production work, and to determine whether centrifuge results obtained initially at Oak Ridge can be repeated by an independent research group. The work at Lilly over the past several months has

involved a study of respiratory syncytial virus in the B-IV and B-IX zonal rotors and is contained in a separate report. Collaborative review of the requirements for a continuous-flow-with-banding rotor for routine production has led to tentative designs for rotor K-1.

Wyeth. — Basic instruction in the operation of the B-XI zonal rotor system has been given to Mr. Leo Schneider over the course of a 2-day isopycnic banding experiment of Type 3 adenovirus components in potassium citrate density gradient. Results of preliminary studies with adenovirus material obtained from Wyeth Laboratories are included in this report.

Adenovirus Protein Separation Study

Objective

The isolation of adenovirus antigens in a state suitable for use as an experimental vaccine.

Materials, Methods, and Results

The B-IV zonal rotor was used in the first attempt to isopycnically band adenovirus subunits in a potassium citrate density gradient. The results are shown in Fig. 1. The starting material for this run was 100 X adenovirus Type 7 as prepared by Wyeth Laboratories and dissociated in bicarbonate buffer at pH 10.5. The density gradient ranged essentially from 1.1 to 1.4 density units, and the large spike of 280-mμ-absorbing material was banded at density 1.22. Considerable 280-mμ-absorbing

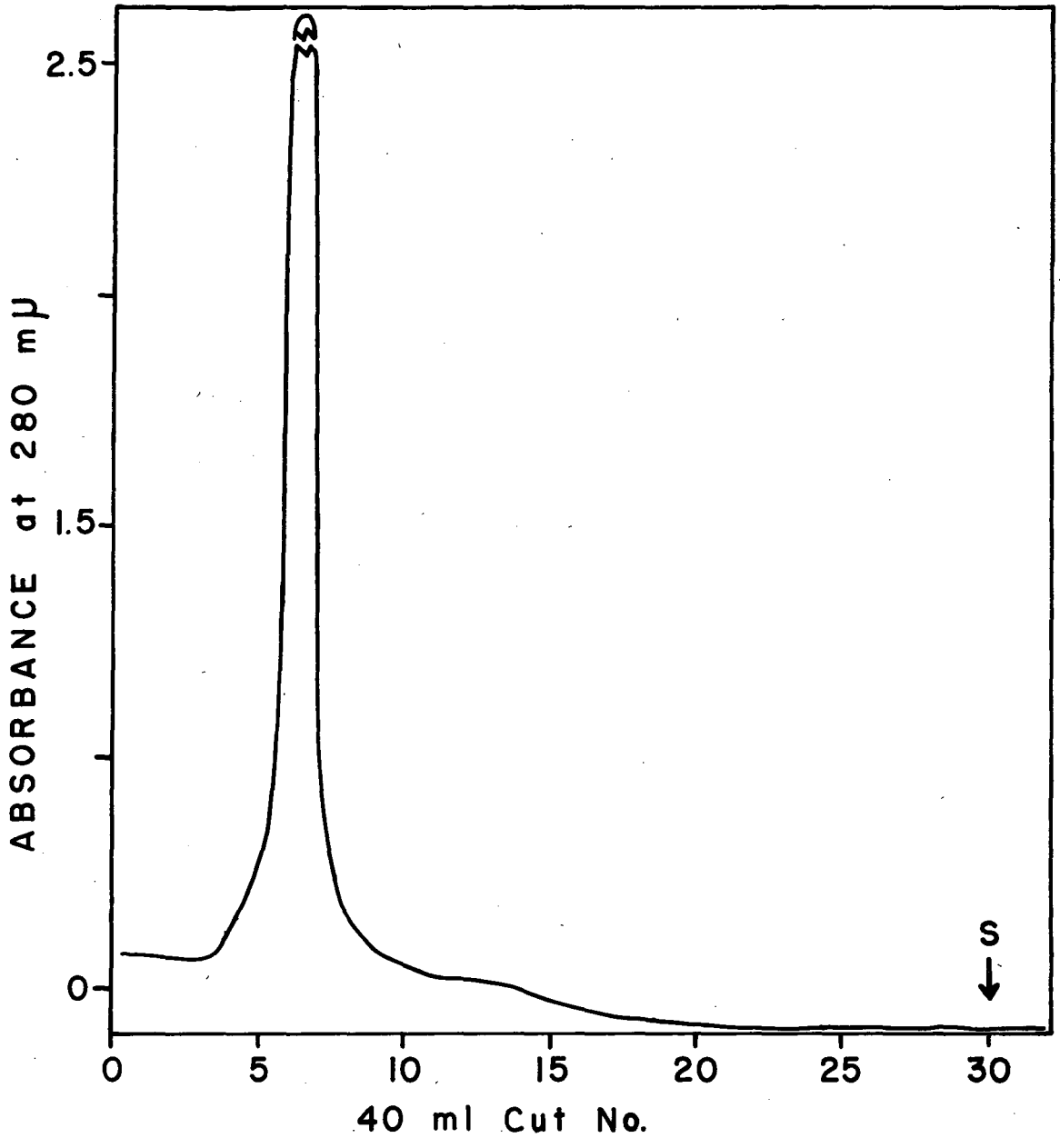

Fig. 1. Optical density profile of pH 10.5 dissociated adenovirus 7 banded isopycnically in potassium citrate density gradient in the B-IV zonal rotor. Starting sample was 24.8 ml and was introduced into the gradient at cut No. 30. Run time was 30 hr at 20,000 rpm. Gradient was preformed and ranged from 1.1 to 1.5 in density.

material is found in fractions of greater density up to zonal cut 14. The starting fraction was introduced into the density gradient in about cut 30 so that all of the material seen on the run monitor had floated toward the center of the rotor. Using this method of placing the sample into the rotor it was hoped that free nucleic acids would sediment toward the rotor wall and eliminate contamination of the protein fractions.

The second isopycnic banding attempt was on alkaline dissociated Type 4 adenovirus in the B-XI zonal rotor. This rotor operated at top speed without the use of an upper damper bearing and therefore did not have to be continuously watched during the duration of the run. A 25-hr run produced the results shown in Fig. 2. A 280-mμ-absorbing band in fractions 3, 4, and 5 contains the bulk of the complement-fixing antigen. Although electron microscopy of the starting material did not indicate the presence of any particulates resembling the subunits previously found in the Adeno 7 preparations studied in this laboratory, a few particles similar in morphology to capsomeres were found in the recovered fraction 3. The input in CF units was 1536 and the recovery was 400. All zonal fractions were extensively dialyzed against phosphate-buffered saline to remove the potassium citrate prior to assay, electron microscopy, or analytical ultracentrifugation. Schlieren analysis of the starting material showed a minor component with an uncorrected sedimentation coefficient of 1.2 S.

To determine the apparent differences between isopycnic banding in the B-IV and the B-XI zonal rotor, a sample of the material containing Type 3 adenovirus

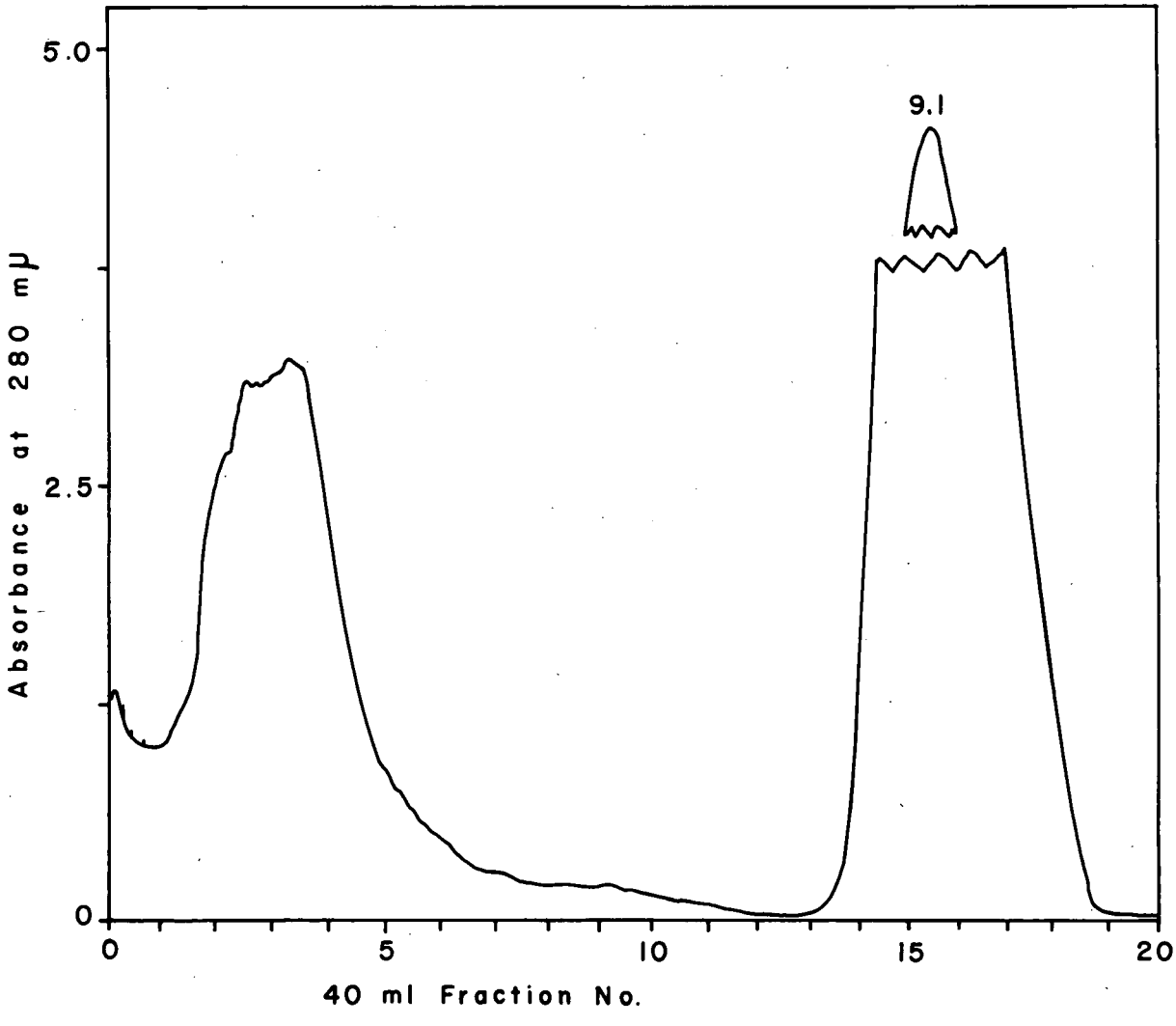

Fig. 2. Optical density profile of pH 10.5 dissociated adenovirus 4 banded isopycnically in the B-XI zonal rotor in a preformed potassium citrate density gradient. CF antigen was found in cuts 3, 4, and 5. Schlieren analysis of the material from the peak centered in fraction 16 gave a one-component peak having a sedimentation rate the same as a control sample of human serum albumin.

subunits was split and half run in the B-IV and the remainder in the B-XI. Figure 3 shows the 280-mμ-absorbancy recording of the results of the B-IV run. Although the rotor was loaded with a preformed density gradient ranging from 1.17 to 1.5, the recovered density gradient indicated a density shift toward the center of the rotor. The result was that the 1.22 density band was next to the rotor core and much of the protein adhered to the core. Figure 4 shows the comparable run in the B-XI zonal rotor. Here the recovered gradient was the same as the starting gradient, and the CF antigen was banded to zonal fractions at a density ranging from 1.20 to 1.22. The input was 832 CF units and the recovery was 480 units. Figure 5 shows the absorption spectrum of the dialyzed material from zonal fractions 5, 6, 7, and 8. The 280/260-mμ absorbancy ratios were 1.125 in cut 5, 1.151 in cut 6, 1.170 in cut 7, and 1.179 in cut 8. Cut 5 thus has comparatively more 260-mμ-absorbing material than cut 8.

To determine what the reliability of the B-XI zonal rotor was in relation to consistency of results, two additional runs were made with separate samples of alkaline dissociate Type 3 adenovirus. The run monitors show that the CF antigen banded consistently at density 1.20 to 1.22 in both runs. The recovery of the input CF units were 240 in and 240 out in the first run and 240 in and 480 out in the second run.

The B-IX continuous flow rotor was used in a preliminary run to determine the cleanout efficiency and final concentration of Type 3 adenovirus from the harvest culture. No CF activity was detected in any of the recovered cuts. Electron

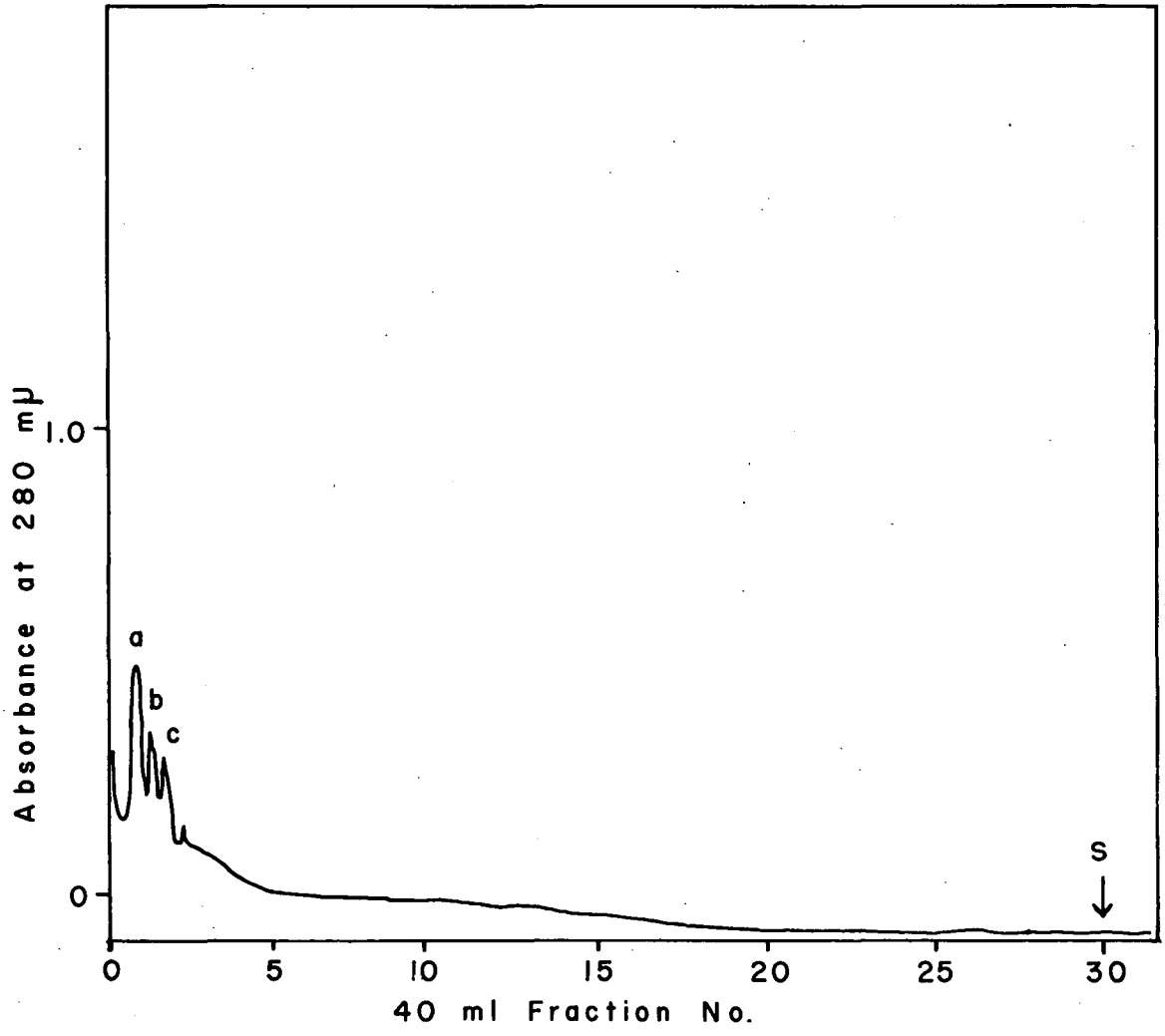

Fig. 3. Optical density profile of pH disrupted Type 3 adenovirus banded isopycnically in the B-IV zonal rotor. The 280-mμ-absorbing material is banded at density 1.20 to 1.22. The sample was introduced into the density gradient at fraction 30. A similar aliquot of the starting material was saved for a B-XI run.

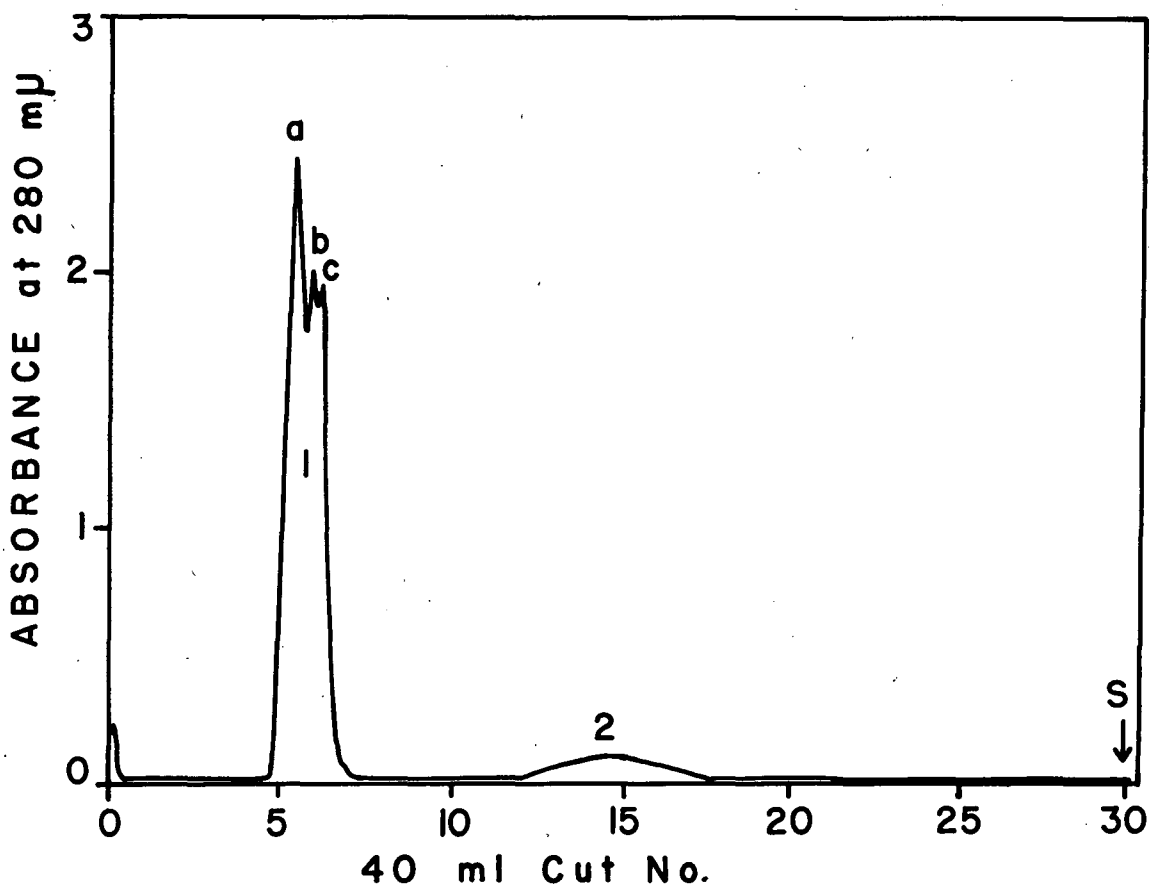

Fig. 4. Optical density profile of the same pH dissociated Type 3 adenovirus used in the B-IV run shown in Fig. 3. The density of the protein fraction is again 1.20 to 1.22 g/cc. The CF antigen was found centered in fraction 6.

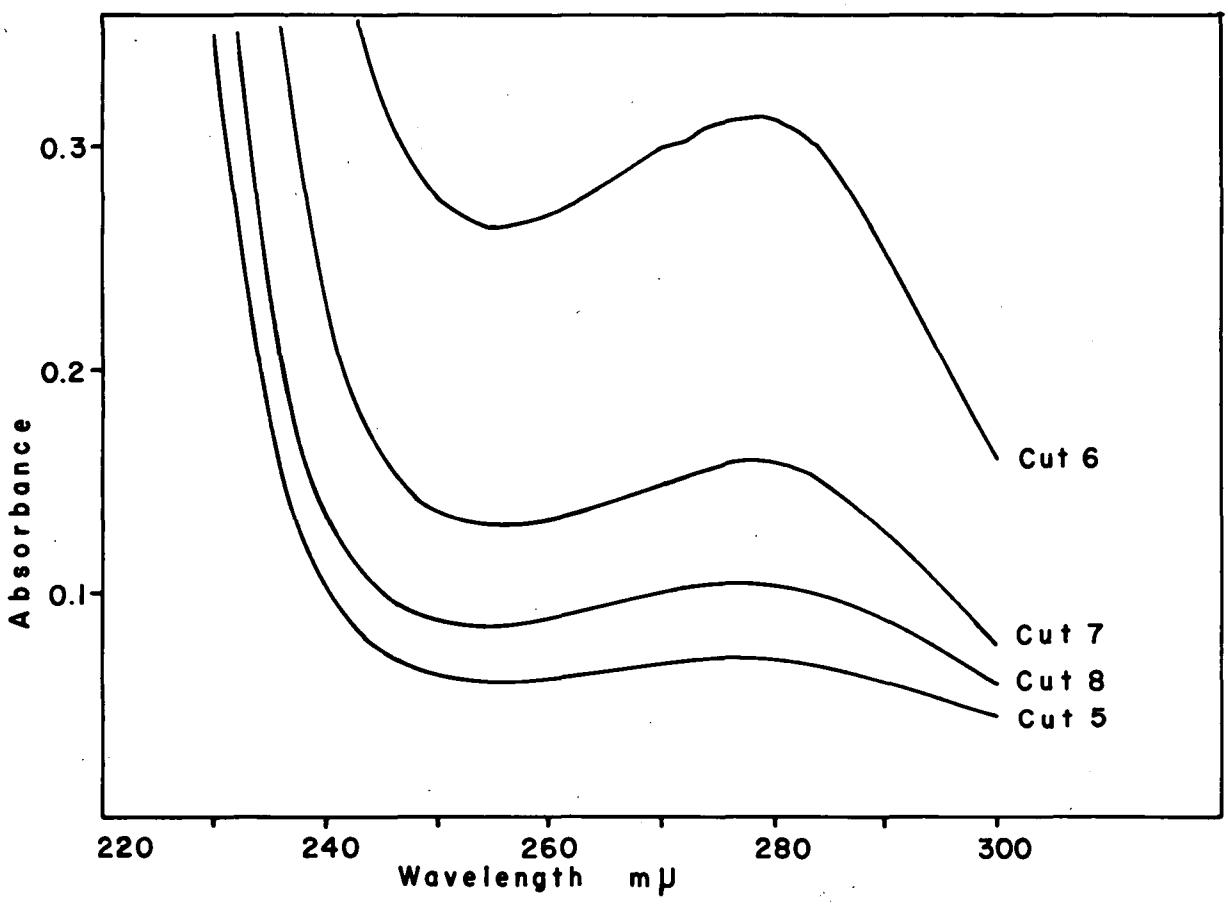

Fig. 5. This graph shows the absorption spectrum of material isolated from the run shown in Fig. 6. Cut 6 contained the peak of the CF antigen. See text for 280/260-mμ ratios of each fraction.

microscopy of the starting sample did not show any intact viruses after extensive searching. Electron microscopy of the material recovered from the citrate cuts having a density of 1.33 to 1.35 also did not show any intact virus particles. By comparison, a previous run using Type 2 adenovirus grown in KB cells gave a sharp spike of intact virus particles in a high state of purity. These results were not repeated using Type 3 virus grown under different conditions.

These preliminary results indicate that, as expected, virus subunits can be banded in density gradients in zonal rotors. However, studies to date have not explored the full potential of presently available systems in a rational manner. With the B-IV centrifuge the sedimentation rate and banding density of an antigen may be determined at all stages in the purification. In the design of a separation method the size, density, extent of aggregation of the desired material, and degree of contamination should be ascertained at the outset and at each stage of purification. In the adenovirus instance, antigen may exist in the form of free subunits, aggregates of subunits including incomplete virus, complete virus, and aggregates of virus and tissue materials. When the state of the bulk of the antigen is known, the initial separation steps can be designed with a view to eliminate as much contamination as possible in the early concentration steps. This appears now to be best done in a cascaded centrifuge system. Once the volume has been sufficiently reduced, then the problems of removing intact virus particles may be approached both physically and chemically. If subunits are found to exist free in solution, then a rate-zonal separation would probably give the best final purification. If possible,

the final product should be shown homogeneous by a number of criteria. The problem of demonstrating the absence of nucleic acids will require infectivity studies, labeled-carrier nucleic acid studies to determine the degree of nucleic acid removal at each stage in purification, and use of very sensitive chemical and microbiological assays to determine the nucleic acid content of the product. New methods for rapidly concentrating particles of capsomere dimensions from large fluid volumes are being explored.

Respiratory Syncytial Virus Isolation

Objectives

Basic research on respiratory syncytial virus (Long strain) is made especially difficult by the fact that the virus does not grow to high titer in continuous cell lines and is easily inactivated by a variety of procedures. The first objective of the research program has been to find a centrifugation technique which would permit rapid and efficient isolation, concentration, and purification of infectious RS particles from liter-volumes of harvest culture. The second objective has been to determine whether the infectious virus could be disrupted into antigenically active subunits which would stimulate the production of neutralizing antibody, or whether the intact virus particle would be necessary for an effective vaccine. Associated with these two primary objectives has been follow-up work with electron microscopy of intact virus particles and partially disrupted virus and a search for antigenically active viral subunits from cell-free and virus-free harvest fluids.

The first objective has been realized with the development of an isolation technique using the newly developed B-IX continuous flow zonal rotor. This rotor combines the techniques of continuous flow centrifugation and isopycnic density gradient centrifugation in one process. The harvest fluid is pumped through the rotor, and the virus particles sedimented from the flow stream into a density gradient until they reach their isopycnic banding density where they remain. This eliminates any packing or deformation of virus particles due to pelleting. The virus can be recovered by displacement of the gradient from the rotor. Routinely better than 99.99% of the infectious particles are removed from the harvest fluid, and between 80% and 90% of these infectious particles can be recovered in a single zone in a comparatively small volume. This isolation process using sucrose density gradients has resulted in considerable purification while concentrating the virus more than 200 X. An additional 3 X to 4 X concentration may be obtained by a second isopycnic banding of this virus in a K-citrate density gradient.

The second objective has been only partially reached. Attempts have been made to disrupt the intact virus under controlled conditions for ultrastructural studies.

Materials and Methods

In preliminary runs, 0.1 mg/ml bovine serum albumin was added to the density gradient to help stabilize the virus. In more recent runs, albumin has not been added and viability has not been decreased.

The sucrose density gradient containing the virus is unloaded from the rotor

at the end of the run by displacement during rotation with a more dense solution of sucrose. As the gradient is displaced through the core of the rotor it is passed through a flow cell and the absorbancy at 260 mμ or 280 mμ recorded continuously. The stream is collected in aliquots (20-40 ml) and used for further studies. A sample of each aliquot is sent to the Laboratory of Infectious Diseases for infectivity and complement-fixing-antigen assay. A sample of each aliquot is also dialyzed against phosphate-buffered saline (PBS) and examined in the electron microscope using phosphotungstate staining. To obtain additional concentration, aliquots containing the intact virus are layered over potassium citrate and centrifuged for 2 hr in the Spinco No. 30 rotor to concentrate the virus particles into an isopycnic zone. The recovered bands are then dialyzed against PBS to remove the citrate before electron microscopy.

The normal background of cellular debris in the zonal cuts precludes ready identification of viral subunits from the crude sucrose cuts. Virus particles have been concentrated from the sucrose cuts by a second isopycnic banding over potassium citrate. This second density separation gives an additional separation of virus particles and debris and an additional concentration. Purification of virus particles by this technique has permitted an examination of disrupted and partially disrupted virus particles by the action of Tween 80 or Freon 113. Characterization of viral subunits from highly purified samples is a necessary prelude to attempts to identify similar particles in virus-free supernants.

On the assumption that considerable amounts of RS virus are degraded to some degree during maturation of the virus or following freezing of the harvest fluid, the effluent from the B-IX continuous flow centrifuge has been processed in the B-V

continuous flow centrifuge to collect small particulates of subviral dimensions. This material has been characterized in the analytical ultracentrifuge and electron microscope and compared with similar material prepared from control cultures of host cells.

The effluent from the B-IX continuous flow rotor was passed through another continuous flow rotor at low flow rates to collect particles with sedimentation coefficients below that of the infectious RS virus. The particles are sedimented to the rotor wall in the B-V rotor and collected from the wall after completion of the run. The pellet was resuspended in the harvest fluid remaining in the rotor and neutralized to about pH 6.8 with HCl to convert the red color of the indicator to yellow for the analytical ultracentrifuge runs. (The resuspended B-V rotor sediment was concentrated by lyophilization in certain cases to get sufficient material to give detectable Schlieren peaks.) All runs were made at 20°C, and the sedimentation coefficients were uncorrected for ionic effects and concentration of the particles.

Results

Respiratory syncytial virus particles have been separated from a large fraction of cell debris by sedimenting to their isopycnic banding levels (approximately 40% and 50% sucrose). The virus zones are recovered from the rotor by displacement of the loaded gradient from the rotor as described previously. The virus zones are collected in 20-ml or 25-ml aliquots and dialyzed to remove the gradient material. Limited effort has been put forth to test various density gradient materials and ionic

environments for optimal virus stability. The best stability has been found to occur using sucrose buffered with 0.01 M or 0.001 M phosphate, pH 7.2 to 7.4, with 0.9% NaCl.

Figure 6 shows the results of one zonal run in which 2.5 liters of previously frozen harvest fluid was processed in the B-IX rotor. The figure shows the optical density profile at 260 mμ of the gradient as it was displaced from the spinning rotor. Three main fractions centered in cuts 1, 3, and 9 are seen. The absorbancy in cut 1 may be due primarily to the methyl red indicator. Infectivity assay is shown by the dashed line and indicates a zone of infectivity centered in cut 10 or at about 40% sucrose. The complement-fixing antigen distribution essentially follows the optical density curve with a peak coincident with the infectivity fraction.

Electron microscopy of samples of each of the aliquots of the above run indicated a fairly high background of nonspecific particulate material throughout all of the density gradient. Intact virus particles were found in the aliquots containing the infectivity peak. Since most of the high background material in cuts 1 through 8 did not resemble virus subunits, attempts were made to find the origin of these particles. Figure 7 shows the results of two continuous flow runs in which noninfected HE-p 2 cell culture fluids were pumped through the rotor under the same conditions used for RS isolation. Figure 7a shows the optical density tracing of the material isolated from the control material. The dotted line represents the sucrose concentration of the starting two-step density gradient,

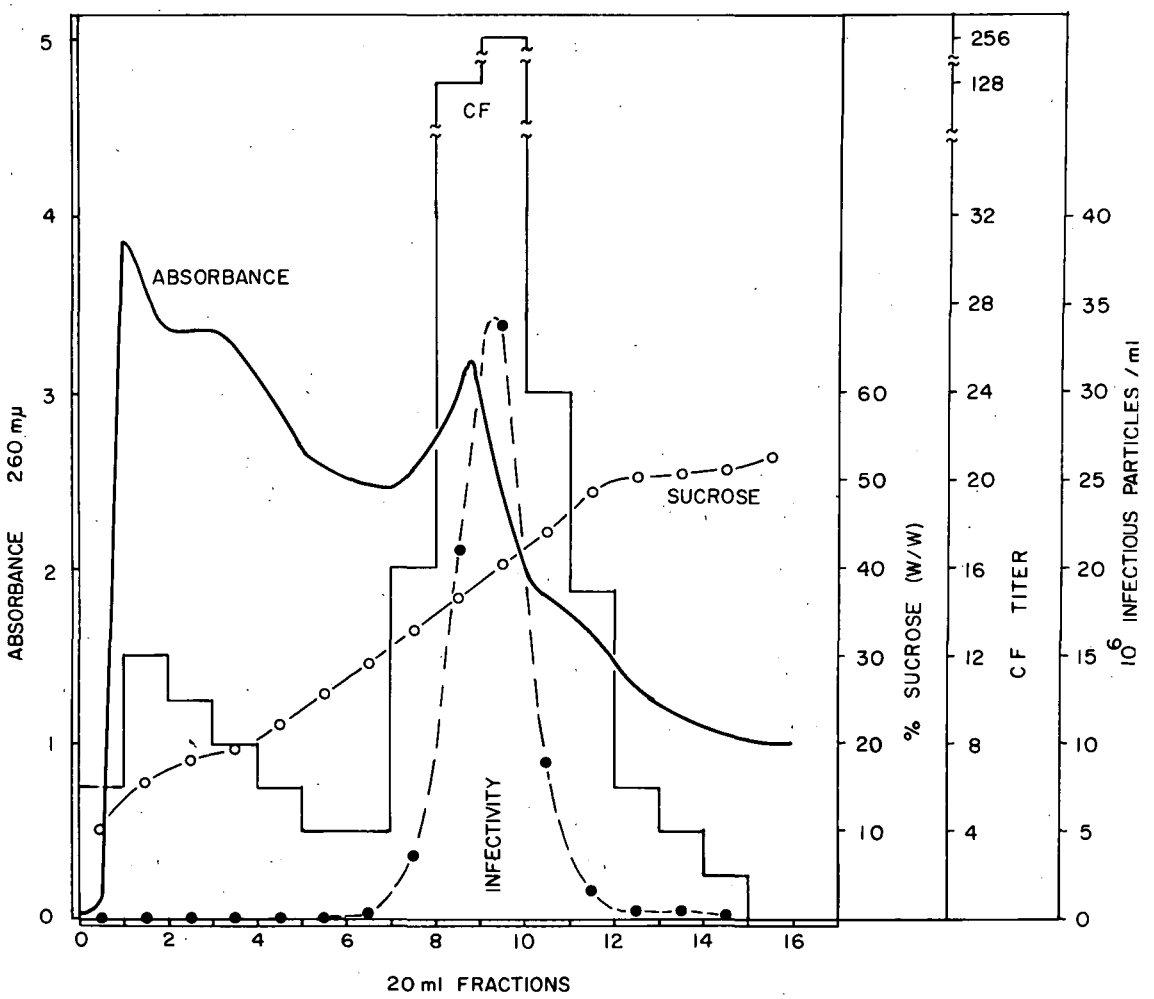

Fig. 6. Total data obtained from one continuous flow run using infectious respiratory syncytial virus harvest fluid in the B-IX rotor. The major infectivity peak was centered in about 40% sucrose in this experiment, with a minor peak centered in about 50% sucrose. The complement-fixing antigen is centered over the major infectivity peak. The CF material near the rotor core is attributed to viral subunits which were trapped by the rotor but had not yet banded.

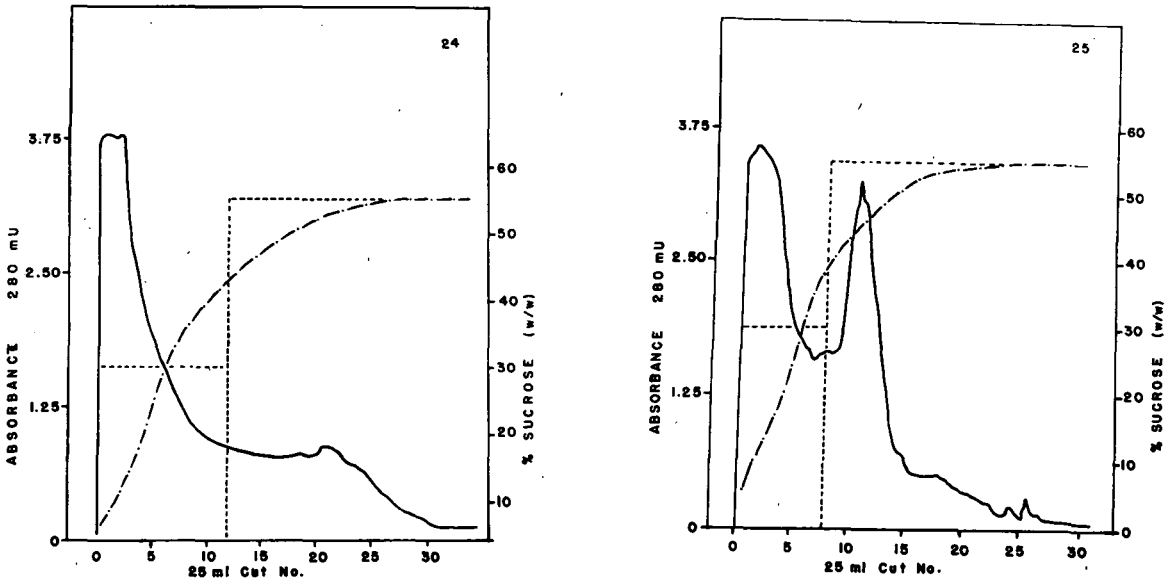

Fig. 7. Comparison of RS infected and control cultures. a shows a continuous run on host cell culture (HE-p 2). The solid curve represents the absorbancy of the B-IX rotor density gradient, -·-·-·-·- is the recovered sucrose gradient, and ------- is the starting discontinuous sucrose gradient. b shows the results obtained with RS-infected culture. The sharp peak centered in fraction 12 and the smaller peaks in fractions 8 and 25 are attributed to viral material.

and the dashed line represents the recovered gradient after 3 liters of control culture was passed over the gradient. Figure 7b shows the comparison run of the same amount of fluid of virus-infected HE-p 2 cells. The optical density tracing shows an additional peak centered in cut 10.

When larger volumes of harvest fluid are processed in the zonal centrifuge (ca. 10 liters), the optical density tracings of the recovered gradient show additional peaks. It is not known yet if the additional peaks represent cell degradation products from infected cells or are truly viral in origin. An additional infectivity zone was found centered in 50% sucrose when 10-liter batches of harvest fluid were processed. The significance of this second species of infectious virus is not known.

The infectious RS virus can be removed from the harvest fluid with high efficiency and at a rapid rate. Table 1 shows the cleanout efficiency at different flow rates at a rotor speed of 40,000 rpm. The cleanout at a rotor speed of 30,000 rpm has not been found to be significantly different. This similarity of cleanout at two different rotor speeds suggests that there may be a few small-sized virus particles having a low sedimentation coefficient which do not get trapped in the rotor. Since the effluent titers only about 10^3 to 10^2, it is not considered worthwhile to operate at higher rotor speeds or slower flow rates to isolate all infectious units from the harvest fluid.

Schlieren analysis of material collected from the precentrifuged harvest fluid (B-IX effluent) indicated no species of particles were present which could be tentatively identified as viral in origin.

The techniques used have been communicated to Lilly Research Laboratories, and their confirmation of certain of these findings is reported separately.

TABLE 1. — Cleanout of infectious RS virus in B-IX rotor at 40,000 rpm

Sample No.	Flow-through rate liters/hr	Titer per 0.2 ml of effluent
1	Starting sample	6×10^5
2	4.15	2×10^3
3	4.20	8×10^2
4	3.2	8×10^2
5	3.2	2×10^3
6	2.2	9×10^1
7	1.2	6×10^1
8	1.2	6×10^1

Virus Isolation in Contained Systems

Objectives

Virus isolation in the zonal centrifuge has required that the centrifuge and its accessory equipment be sterilized and operated in a sterile environment. One

method of doing this has been to house the centrifuge and its associated pumps and monitoring equipment in an enclosed area which can be sterilized and operated under sterile conditions. Such a containment system has been used for the large-scale isolation of respiratory syncytial virus and ECHO 28 virus from liter volumes of tissue culture fluid and for the separation of subunits of adenovirus Types 3, 4, and 7 from intact virus and cell debris. Engineering aspects of this containment system are presented in a subsequent section. Problems arising from daily operation of this sterile isolation system and the efficacious use of such systems for production of useful vaccines are discussed below.

Materials and Methods

The containment system shown in Fig. 8 for the isolation of infectious viruses from tissue culture is essentially a complete laboratory housing not only a zonal ultracentrifuge but also analytical equipment such as UV spectrophotometer, density gradient engine, sample pumps, water coolant system, refrigerators, a low-speed centrifuge and a high-speed centrifuge, zone fractionator, a modified Westphal balance, glassware, and assorted items such as syringes, pipettes, tubing, and vials. Manipulation of this equipment is though arm-length rubber gloves. The entire glovebox can be sterilized by ethylene oxide by an automatic control system. Filtered air is pumped through the glovebox to carry aerosols through an incinerator where the air is burned at 700° F. Aerosols are also exposed to UV lights within the glovebox. The temperature and humidity can be controlled continuously, and the temperature lowered to make the box essentially a cold room.

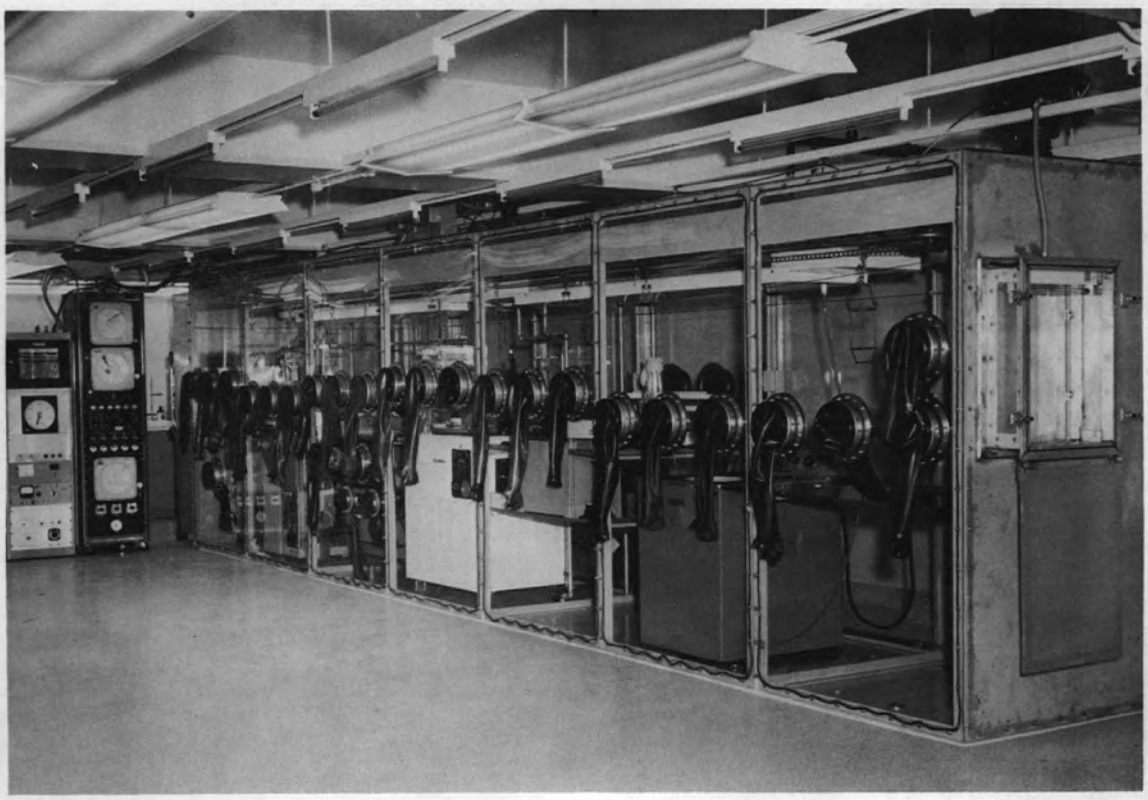

Fig. 8. Contained virus isolation system (CVIS).

This is of particular value when samples are to be concentrated by pressure dialysis or pressure filtration in the enclosure.

Access to the interior of the glovebox is via a double door pass-through steam-gas autoclave on one end or by a double door exchange compartment on the opposite end. The autoclave is used for steam sterilization of glassware and other autoclavable items needed inside the box. It is likewise used to sterilize contaminated glassware and tubing after completion of a run. The autoclave is used as a gas sterilizer to decontaminate nonautoclavable items such as centrifuge rotors before or after use. Virus stocks are passed into the glovebox after being wiped with formalin or 70% alcohol and are again wiped or dipped immediately inside the glovebox. Virus samples produced during the separation procedures are capped in sterile vials or in screw top test tubes and passed to the outside after being wiped or dipped in formalin.

Spilled materials in the glovebox, dialysates, wash solutions, and waste from the steam sterilizer are dumped through valved ports in the floor of the glovebox to a drain sterilizer. These solutions are autoclaved 2 to 3 times longer than recommended sterilizing times before being drained into septic tank and drain field serving only this building.

The laboratory shown in Fig. 9 is the analytical backup laboratory for the glovebox shown in Fig. 8. Samples generated in the glovebox are further characterized by absorbancy profiles and are checked for homogeneity or purity by sedimentation characteristics in the analytical ultracentrifuge.

Fig. 9. Analytical backup laboratory for the glovebox shown in Fig. 8.

Results

The glovebox system currently in use permits sterile operation of the zonal ultracentrifuge and accessory equipment and convenient processing of the numerous samples generated by the centrifuge. Both continuous flow centrifugation and isopycnic centrifugation may be done. Several runs on the same virus can be made without resterilizing the entire glovebox each time. The rotor and accessory items are washed and gas-sterilized in the small autoclave before reuse. In this manner it is possible to process 50 liters or more per week. This volume is estimated from single daily runs in which 10 liters or more can be passed through the centrifuge and the samples processed before the next day. With two or more people working in the glovebox, the flow-through volume can be increased appreciably.

Containment Design Features

Initial containment systems constructed during the program were of a simplified design with a sterile enclosure attached to the top of a zonal centrifuge, but a centrifuge drive and associated seals open to the outside. In the new system all equipment is enclosed without modification inside a large, welded aluminum frame 28 feet long, 4 feet wide, and 7-1/2 feet high, covered with transparent acrylic sheeting. The experimental centrifuge systems installed are: the A-XII, the B-series, and an unmodified preparative ultracentrifuge. The B-series centrifuge system was successfully used to separate viruses for over 30 biological

runs in the enclosure over a period of 9 months, without incurring any damage to the centrifuge system or associated instruments from the gas sterilant.

Basic System

The schematic of the basic system is shown in Fig. 10. The enclosure is kept under a controlled vacuum of about 1 inch water pressure differential. The source of the vacuum is a stem ejector located at the top of the exhaust stack. The entire system is maintained at a negative pressure, making any leakage in the system to be inward. The exhaust from the containment cabinet is incinerated and exhausted at 750°F by a gas-fired incinerator. In a normal operating condition the containment cabinet is kept at 50°F and 20% relative humidity with about 5 standard cubic feet per minute (scfm) air flowing through the system. The cabinet is gas-sterilized at 130°F and 50% relative humidity at near atmospheric pressure, using Oxyfume-12 as the sterilant. Any liquid discharge from the cabinet is sterilized in the drain sterilizer system. To provide the maximum safety, the system is designed to maintain a negative pressure, even with accidental removal of a glove. Even under this condition, the incinerator exhaust temperature does not drop below 750°F.

Containment

In Fig. 8, a reversible conveyor system is shown which allows materials to be moved to any point within the cabinet. Rotors, glassware, and accessories are passed into and out of the sealed area through a double door autoclave equipped

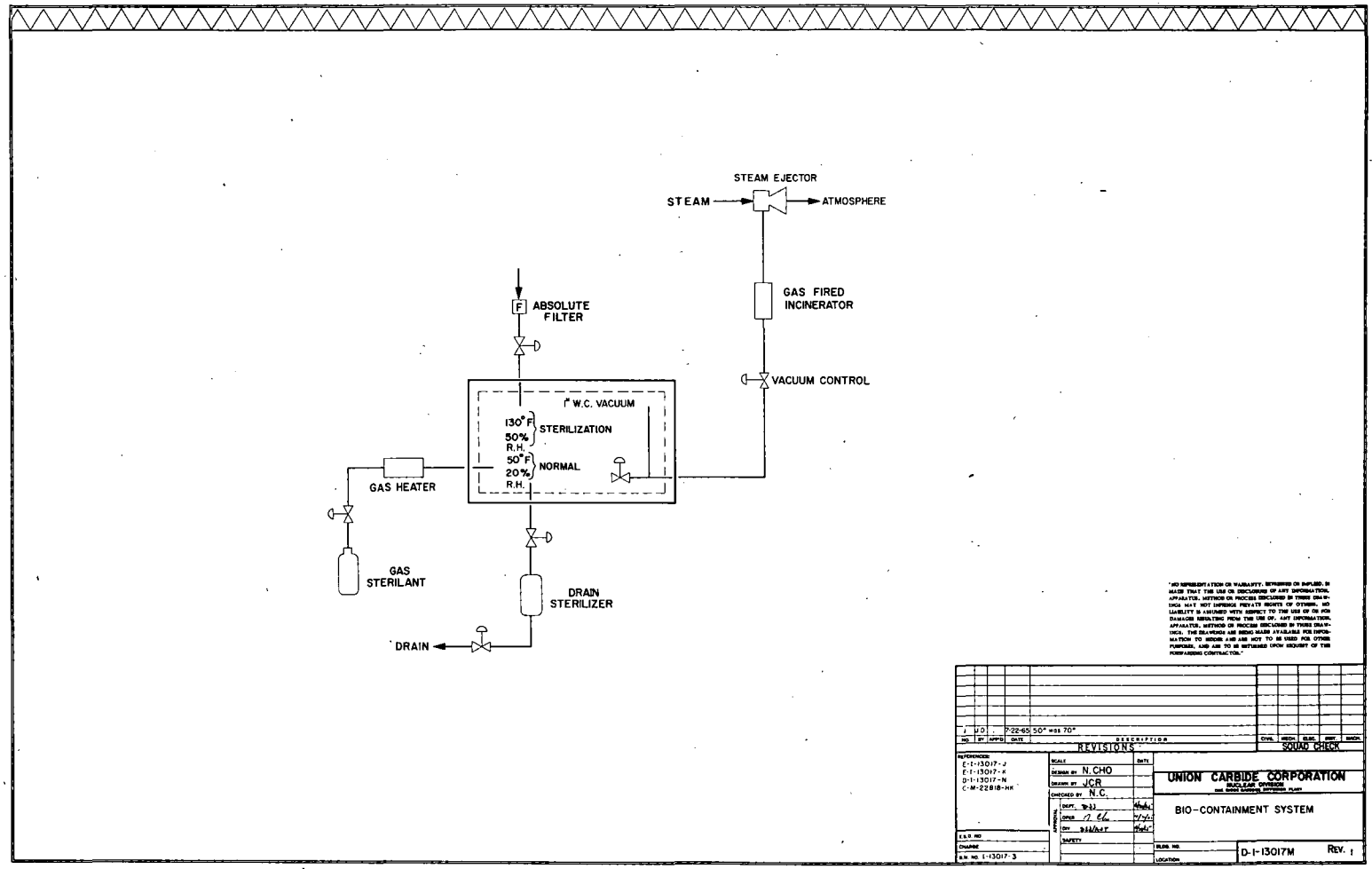

Fig. 10. Major components of contained virus isolation system (CVIS).

for gas or steam sterilization. An exchange compartment with ultraviolet lights is located at the opposite end of the cabinet. A space for sterile supplies is provided beneath the stainless steel work surfaces. A thermoelectric refrigerator is used for temporary storage of separated viruses. A camera box is installed within the containment to photograph banded samples in transparent tubes in a sterile condition. Glove ports are provided at several locations as needed for efficient and convenient operation. UV lights are installed in the ceiling of the cabinet to provide additional sterilization as required. Neoprene gaskets are used to provide seals between the wall covers and the housing frame.

Sterilant

The Oxyfume-12 cylinder manifold station with automatic switchover is shown in Fig. 11. To prevent freezing within the piping due to expansion of the liquid, a steam heat exchanger with an automatic temperature control is used to maintain the gas temperature entering the containment at 130°F. The gas flow rate is set by a manual needle valve. The sterilant gas concentration used inside the cabinet is 450 mg of ethylene oxide per liter of volume at 1 inch water vacuum. A lower concentration of ethylene oxide during the sterilization period requires a longer sterilization time. To prevent possible explosion, all electrical lines to the containment space are cut off during the sterilization cycle. Also, 250°F maximum steam temperature is used in the steam heat exchangers and the heater within the containment to maintain the sterilant gas temperature at 130°F. A gas-density transmitter, operating on a force-balance principle, weighs a float attached to the

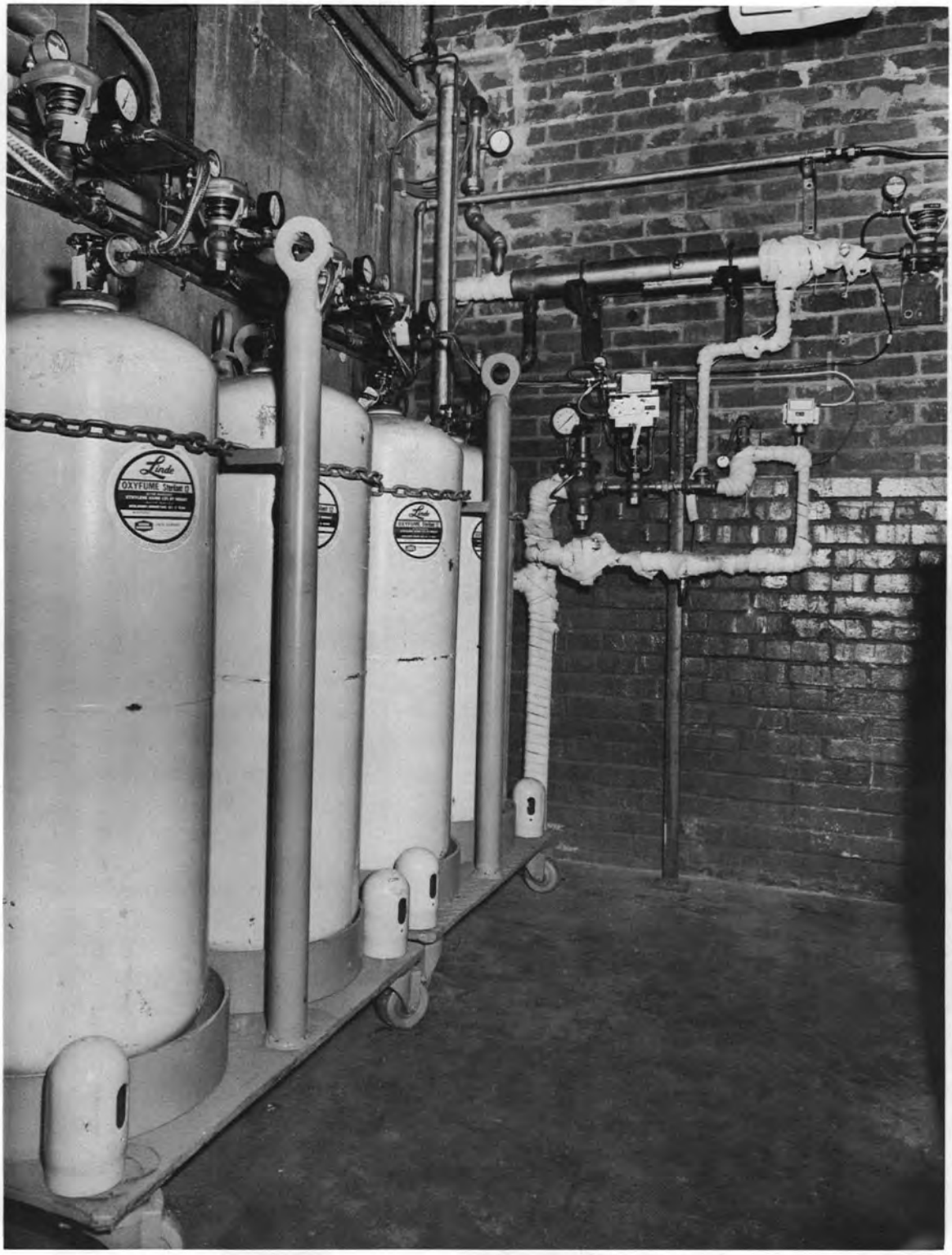

Fig. 11. Oxyfume cylinder manifold and automatic switchover station.

force bar, which is balanced against the initial zero spring. As the gas density increases, the float tends to move upward. This movement causes the force bar to move upward. This action closes the nozzle baffle gap, resulting in increase in the nozzle back pressure, which is amplified in a pneumatic relay. The output of the pneumatic relay, or amplifier, goes to a pneumatic recorder to record gas density, also to the feedback bellows to restore the force bar to its original position. The increase in gas density causes the force bar to move upward. The feedback bellows restores it to its initial position until the two are in balance again. The movement required in the transmitter lever is less than 1/1000 of an inch. A typical density-versus-output of the transmitter is shown in Fig. 12.

The transmitter is accurate within 1/2%. The transmitter has two functions: to measure gas density and to control the Oxyfume-12 level in the containment. At the start of a sterilization cycle, the Oxyfume-12 is introduced at the base of the containment through a perforated manifold. The displaced air exhausts to atmosphere through the incinerator. As the sterilant gas reaches the desired level, the transmitter float is actuated. This initiates the sterilization cycle. This also turns on the sterilization timer and an explosion-proof motor-operated fan which circulates the sterilant within the containment. During this period, some of the air remaining in the containment is also mixed with the sterilant. The transmitter used up to now as a float level switch now functions as a transmitter to measure density. If the ethylene oxide concentration within the containment is below the desired level, the transmitter signal causes more ethylene oxide to be added to the

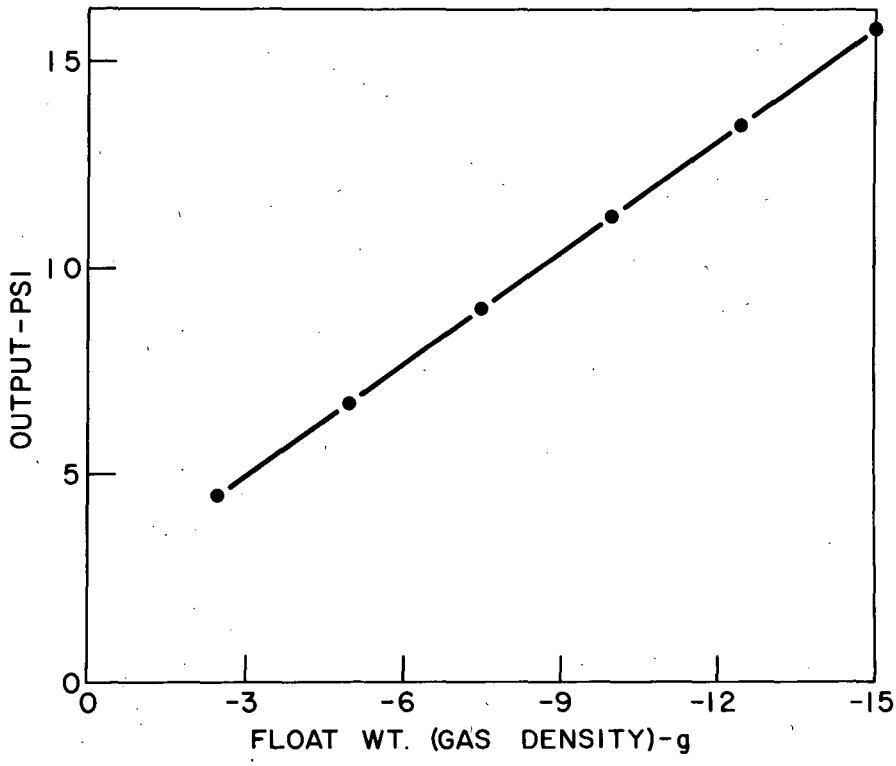

Fig. 12. Gas density vs gas-density transmitter output.

containment. Live steam is injected into the containment during sterilization to maintain the cabinet humidity at 50%. After a predetermined sterilization cycle period, the timer initiates an exhaust cycle. A large amount of filtered air, up to 350 scfm airflow, is used to de-gas the containment for a specified period, usually up to 10 hours.

Air Conditioning

At the completion of the sterilization cycle, the containment air conditioning system is actuated to control the containment temperature at 50°F and 20% relative humidity. The containment air conditioning system, Fig. 13, is designed to handle from 0 to 7-1/2 tons. To handle this load variation and yet maintain the desired temperature with a minimum possible differential within a containment, a special feature was added to a commercial air conditioning compressor. An automatic expansion valve was used in the discharge side of the compressor to supply up to 1 ton (12,000 btu/hr) to the suction side, bypassing the evaporators. By wrapping cooling coils around the housing of the motors, the heat necessary to evaporate refrigerant in the bypass was obtained. Under a partial load, 1/4 ton, the bypass is used to maintain the suction pressure and required refrigerant flow to cool the hermetically sealed motor. At the full load, the bypass system shuts off automatically.

Incinerator

The discharge of the incinerators is maintained at 750°F at all times. However, by using the discharged air from the containment itself as a combustion air to ignite

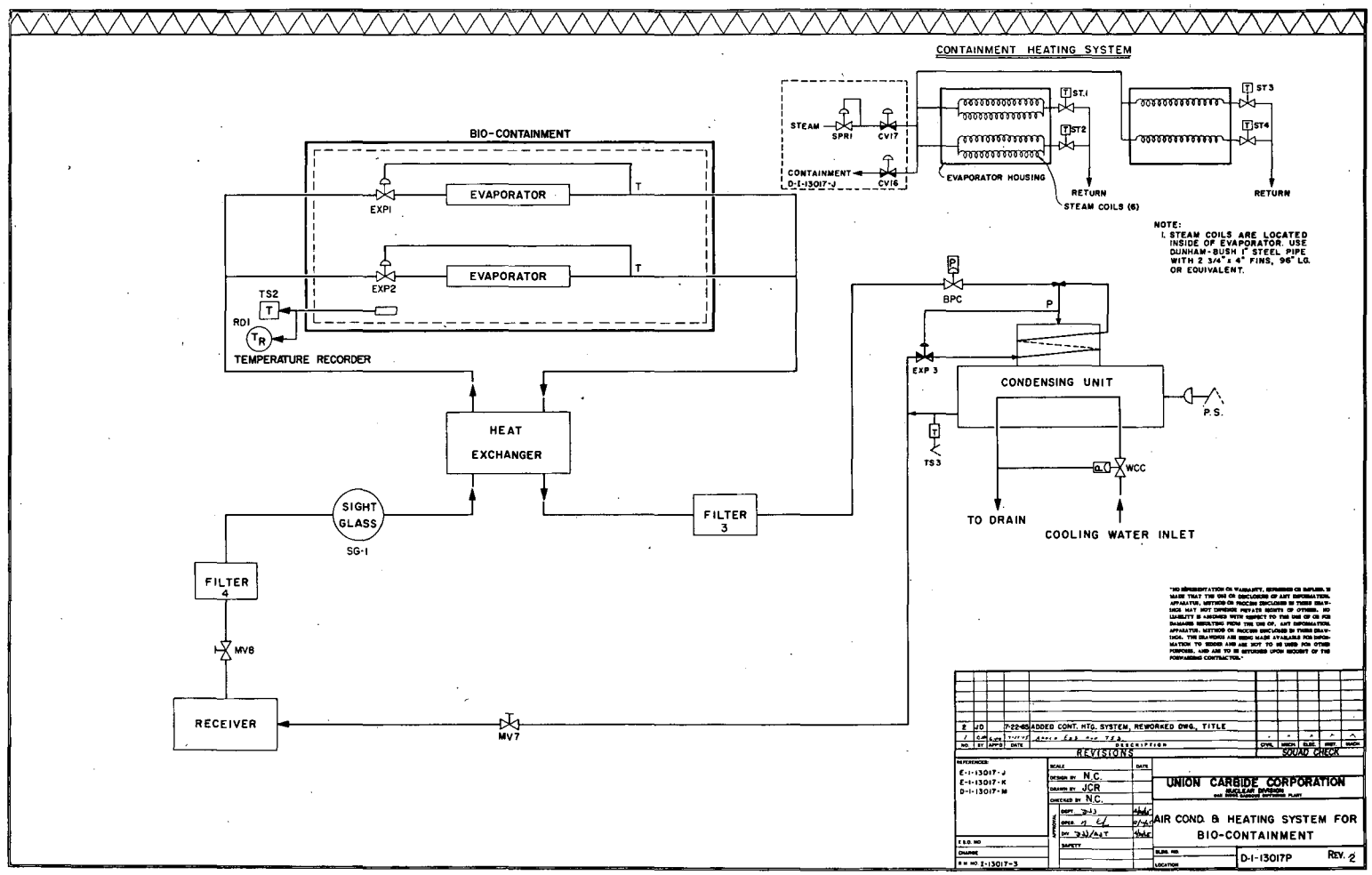

Fig. 13. Schematic drawing of air conditioning and heating system.

the gas, the air itself actually reaches the combustion temperature of the gas. Should a glove be removed accidentally, a large amount of air (up to 350 cfm) would be passing through the containment and the incinerator. The incinerator temperature would normally drop considerably. However, the incinerator is fully loaded with a like amount of air from the atmosphere under normal conditions. (The operation of the incinerator is schematically represented in Fig. 14.) Valves used for auxiliary atmospheric air and the containment exhaust are equal but opposite in operation. Should the valve opening from the containment increase, the valve opening to atmospheric air closes proportionally. Thus, the incinerator itself does not sense the change in load, other than a slight variation in temperature, humidity, and possibly airflow velocity. This slight deviation is sensed and corrected by an automatic temperature controller with a reset. As an additional safety feature, the system is designed so that when the auxiliary atmospheric air closes completely and is wholly replaced by the airflow from the containment, which would occur if a glove were removed, incinerator temperature increases. Once the system is balanced, the temperature controller in the incinerator is not required.

Vacuum Control

A differential-pressure transmitter is used to monitor the difference in pressure between the containment and atmosphere surrounding the containment. As an example, when both the cabinet and surroundings are at identical atmospheric pressure, the transmitter output is at 3 psig. When the cabinet is at 3 inches of

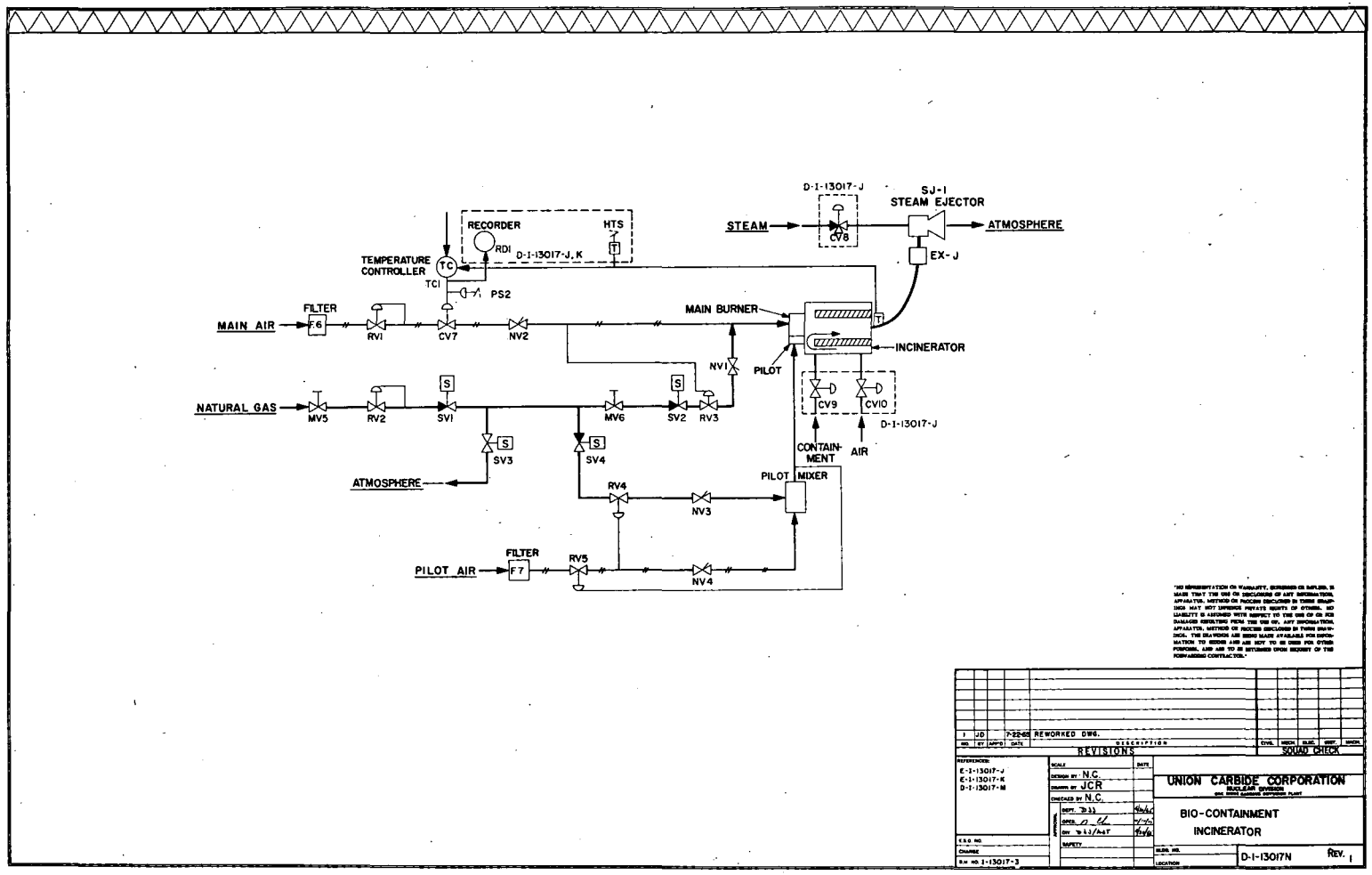

Fig. 14. Schematic drawing of incinerator and exhaust systems.

water below atmospheric pressure, the transmitter output is set to be 15 psig. Thus, the differential-pressure transmitter measures the containment vacuum against the atmospheric pressure and produces 3 to 15 psig signal as a linear function of vacuum from 0 to 3 inches of water. This differential in pressure is transmitted to the controller. A pressure controller set at a pressure corresponding to a 1-inch vacuum in the cabinet will control the vacuum control valve (containment exhaust) to either close or open depending on the vacuum measurement sensed by the transmitters. In a control application, a controller with a proportional band action only produces offset. (The offset is a deviation in a process from the control set points.) The offset is utilized in this case as a warning device to indicate the excessive leakage present in the system. The controller used to control vacuum in the cabinet also commands the auxiliary air valves to flow the required amount of air to maintain the containment at the desired vacuum.

The vacuum control system described so far is not affected by the incinerator, nor does it affect the incinerator itself. The cabinet, therefore, can be run under negative pressure without requiring a change in the controller setting with or without the incinerator in operation. This would still be true when accidental removal of a glove occurred at the cabinet. The increase in airflow from the containment will continue as long as the containment vacuum is below the desired point. When the cabinet reaches the desired point, the increase stops and the proper flow is maintained to generate a 1-inch vacuum in the cabinet.

Instrumentation

Warning lights are activated at 0 and 2 inches of water differential vacuum or pressure. At 3 inches of vacuum or pressure, the system shuts off. All system functions are initiated and controlled at the master panel. The master control panel has three recorders which record ethylene oxide concentration, relative humidity, containment temperature, incinerator temperature, and containment vacuum. The auxiliary systems for the containment are interlocked in the master control panel. Any malfunctions in the system may be detected in the master control panel annunciators. Operations may not be resumed automatically unless the cause of a shutdown is corrected. Manual override, except for the safety points, is provided. In automatic operation the manual overrides are automatically cancelled.

To start the system, the operator uses two command buttons, stop and start, and three optional select buttons: gas sterilize, incinerator, and air conditioning. Selecting the optional buttons does not start the system until the proper sequence and conditions are satisfied. If all three options are selected, the start command initiates the following sequence automatically: Oxyfume heater is started and temperature control is maintained, sterilant supply and incinerator are cut off, containment electrical power is cut off, containment vacuum is controlled, sterilant density measurement is activated, all valving from containment is closed except the vacuum control. If, and only if, the above conditions are satisfied, the sterilant valve is opened. A satisfactory sterilant concentration initiates containment heater, fan, humidity controls, and timer.

The air conditioner and incinerator are turned on at the completion of the gas exhaust cycle. When the incinerator temperature reaches the design value, the panel signals readiness of the containment for use. The sterilization process takes about 24 hr. The system is sterilized unmanned. In addition to the sterilizing sequence, the safety and controls are automated in the master panel. The system drawings are shown in Figs. 14 through 18.

Pneumatic controllers, transmitters, and valves are used throughout the containment system for simplicity and economy.

Drain Sterilizer

Any liquid discharge from the containment as well as from the double door sterilizers is collected in the reservoir. When the reservoir level reaches 40 gallons, it automatically initiates transfer of the collected liquid to a sterilizer. When the sterilizer level reaches the predetermined value, the sterilizer begins an automatic sterilization cycle by bringing the liquid temperature to 350°F and maintaining the temperature for a 3-hr period. At the completion of the sterilization cycle, it initiates discharge, draining the sterilized liquid.

Large-Scale Tissue Culture

Extensive experience in continuous cultures of protozoans and limited experience in continuous culturing of L-cells at Oak Ridge has shown that several physiological parameters of the cells and culture media can be followed automatically. Cell number, pH, oxygen content, carbon dioxide partial pressure, and cell size can

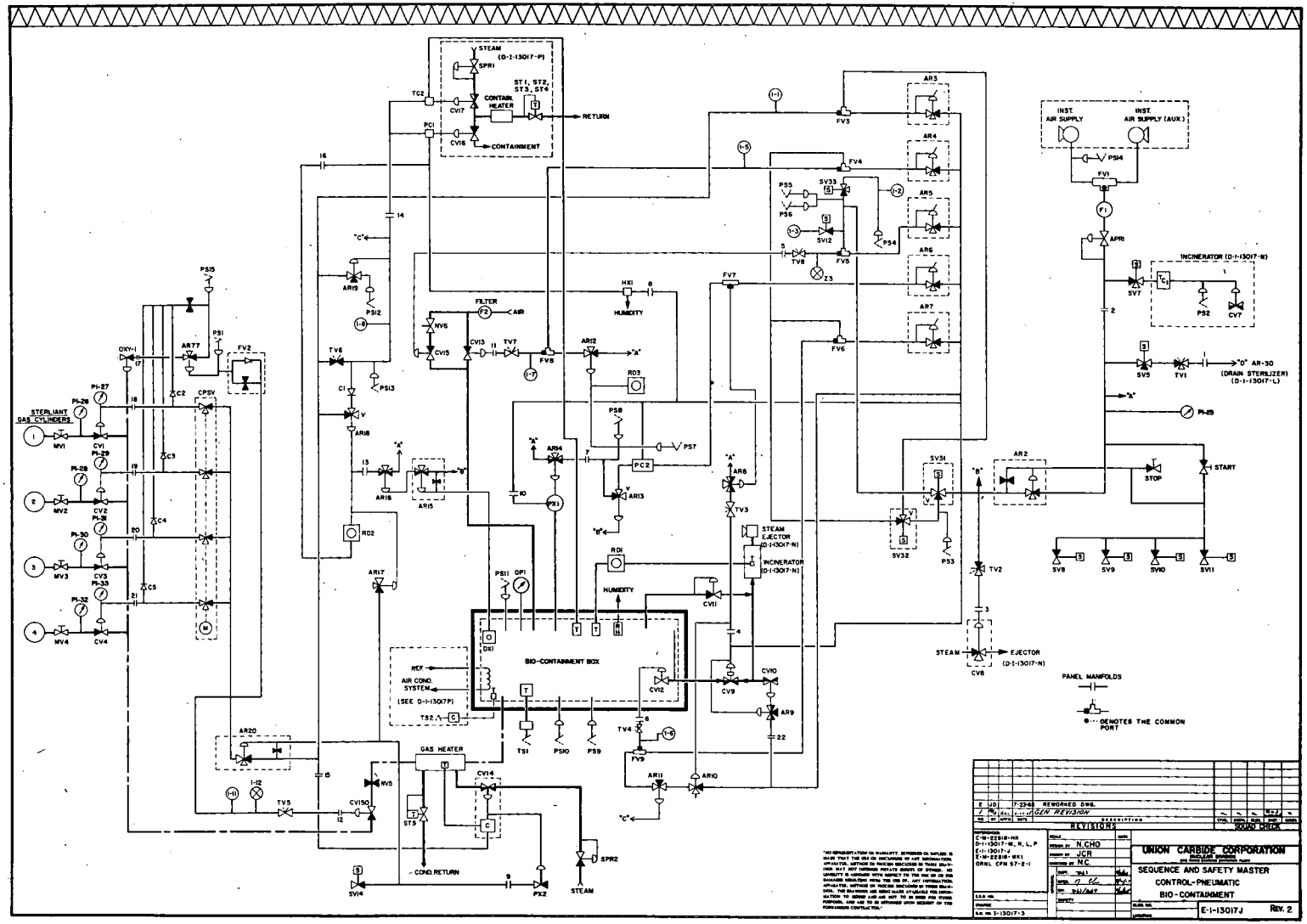

Fig. 15. Schematic drawing of pneumatic instrumentation.

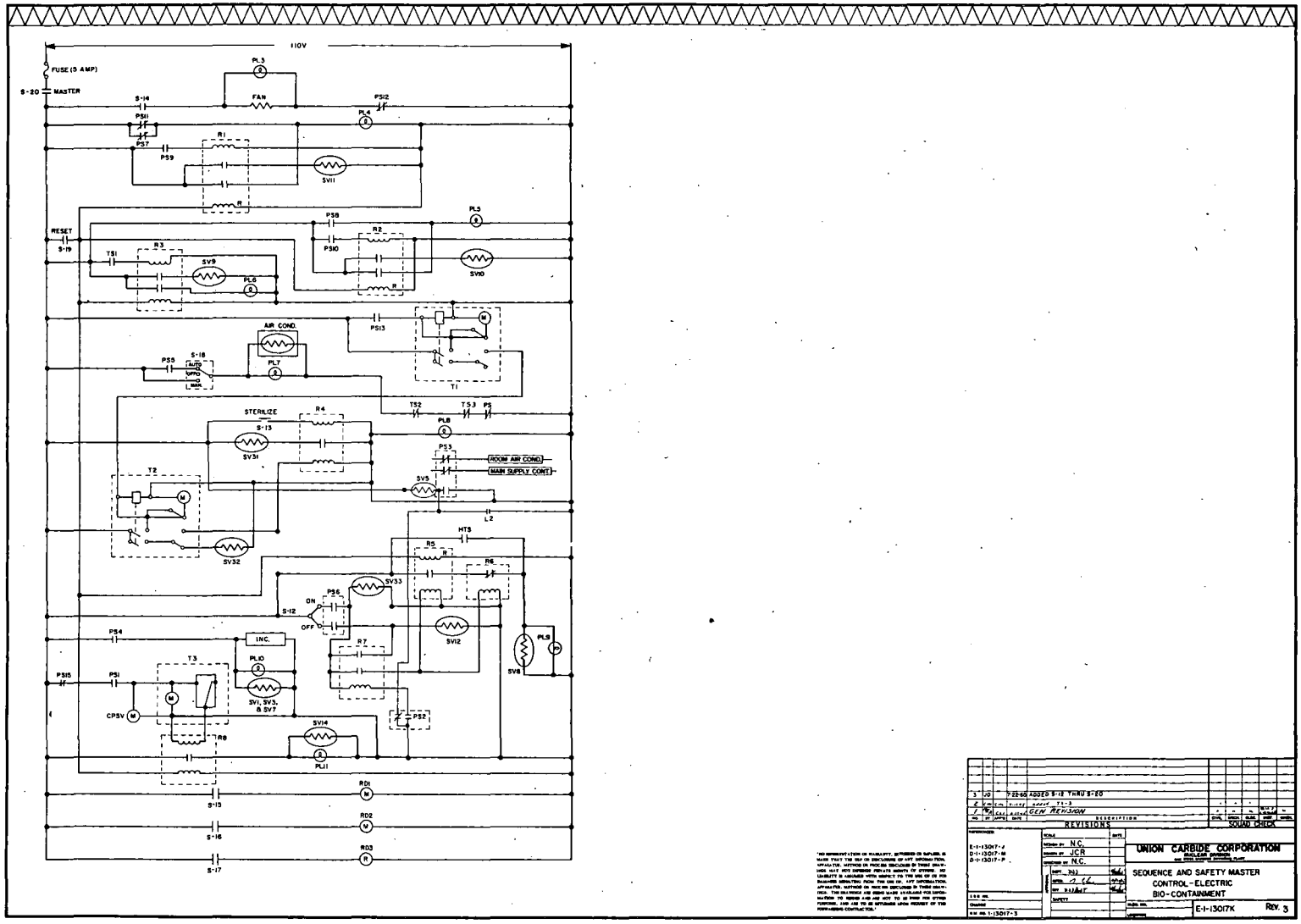

Fig. 16. Schematic drawing of electrical instrumentation.

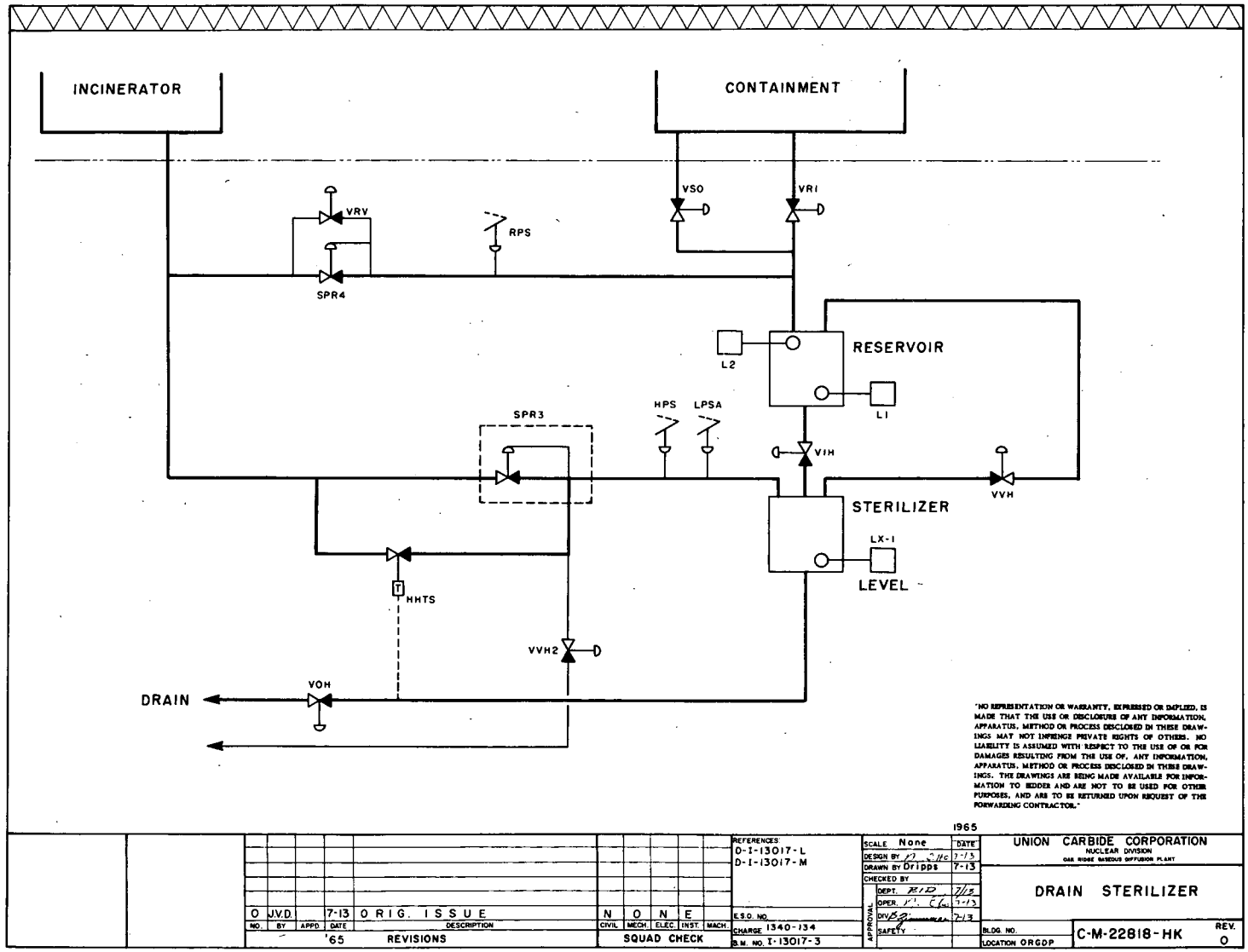

Fig. 17. Schematic drawing of drain sterilizer system.

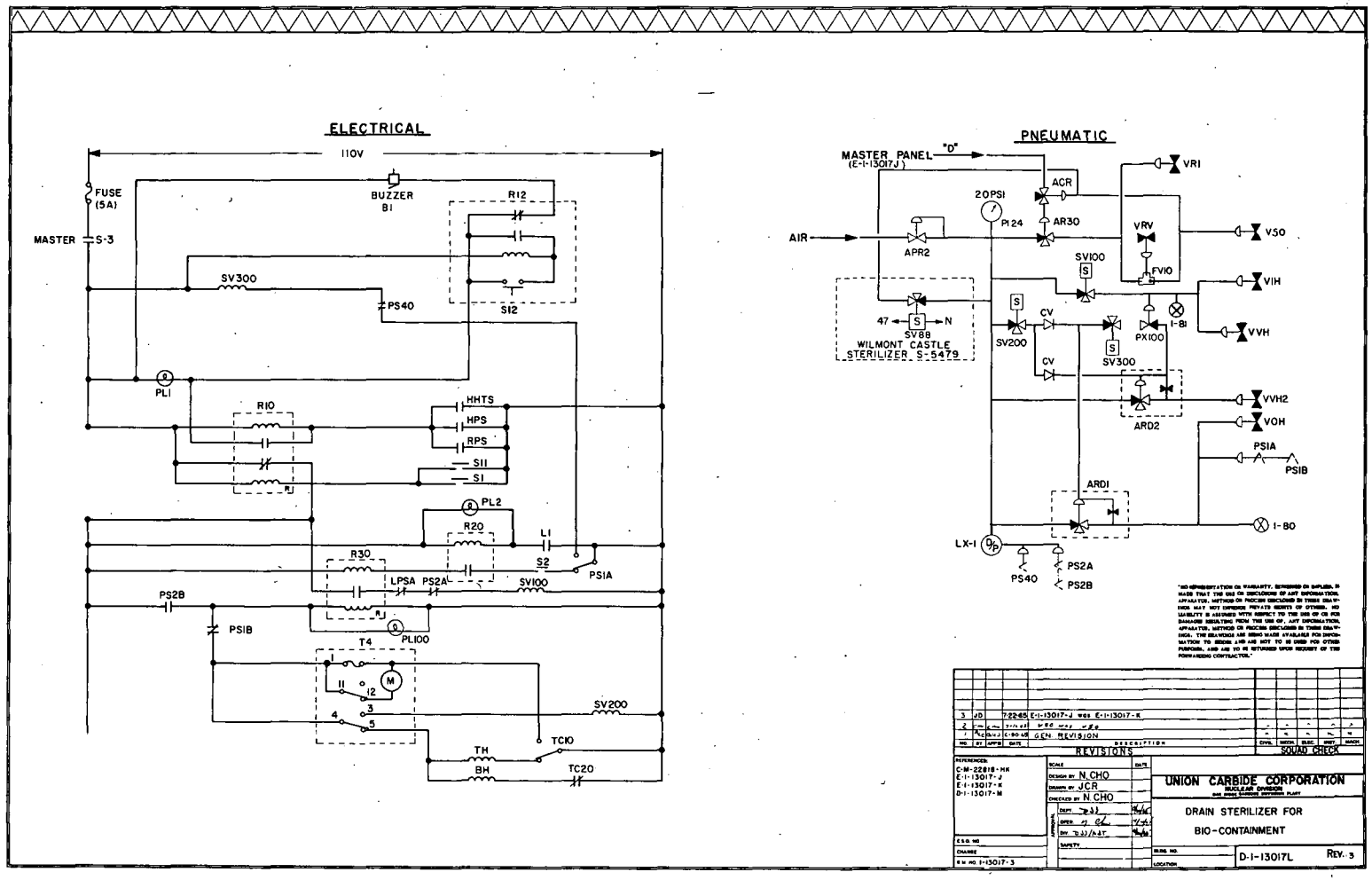

Fig. 18. Schematic drawing of instrumentation for the drain sterilizer.

be monitored continuously and automatically to indicate the state of the cell culture. Similar procedures can be used for continuous monitoring of other mammalian cells which would grow in liquid suspension. Such information would facilitate studies of infectivity and virus yield as functions of cell growth and stage in division and at the same time permit gram yields of cells for studies of cell-virus interactions.

Plans are being formulated for the growth of adenoviruses on KB cells in spinner cultures. The complete cell growth, infection, and virus harvest will take place in containment in order to reduce chances of contamination. The engineering problems of such a containment system are being considered. The media will be introduced into the containment system for sterilization studies by way of a filtering system. This procedure is designed to eliminate any particles of viral dimensions from the starting media. The various modules of the containment system will be temperature and humidity controlled where necessary and under positive pressure to further eliminate possible contamination. The modules where infectivity and virus growth are carried out will be under negative pressure to an incinerator system to decrease chances of virus contamination of personnel. The virus-harvest fluid will be pumped directly to the zonal centrifuge containment system nearby for immediate virus isolation or fractionation in one or more of the zonal rotors.

INTERNAL DISTRIBUTION

1. S. I. Auerbach
2. R. Baldock
3. R. E. Biggers
4. A. L. Boch
5. D. S. Billington
6. E. P. Blizard
7. C. J. Borkowski
8. G. E. Boyd
9–10. Clark E. Center (ORGDP)
11–12. D. D. Cowen
13. C. J. Collins
14. F. L. Culler
15. P. B. Dunaway
16. J. L. Fowler
17. J. H Frye, Jr.
18. R. F. Hibbs (Y-12)
19. A. S. Householder
20. J. S. Johnson
21. R. W. Johnson
22. W. H. Jordan
23. K. A. Kraus
24. M. T. Kelley
25. J. A. Lane
26–27. C. E. Larson
28. T. A. Lincoln
29. R. S. Livingston
30. K. Z. Morgan
31. D. J. Nelson
32. M. L. Nelson
33. J. S. Olson
34–36. R. B. Parker
37. M. E. Ramsey
38. R. M. Rush
39. M. J. Skinner
40. E. H. Taylor
41. A. M. Weinberg
42. G. C. Williams
43. H. I. Adler
44–63. N. G. Anderson
64. W. A. Arnold
65. R. H. Baum
66. M. A Bender
67. F. J. Bollum
68. S. F. Carson
69. E. H. Y. Chu
70. G. B. Cline
71. W. E Cohn
72. C. C Congdon
73. F. J. de Serres
74. D. G. Doherty
75. W. D. Fisher
76–78. C. J. Whitmire, Jr.
79. A. H. Haber
80. A. Hollaender
81. S. Karasaki
82. M. A. Kastenbaum
83. R. F. Kimball
84. S. P. Leibo
85. D. L. Lindsley, Jr.
86. T. Makinodan
87. P. Mazur
88. G. D. Novelli
89. T. T. Odell, Jr.
90. G. M. Padilla
91. A. P. Pfuderer
92. M. L. Randolph
93. W. L. Russell
94. R. B. Setlow
95. G. E. Stapleton
96. A. C. Upton
97. E. Volkin
98. R. C. von Borstel
99. S. Wolff
100. T. Yamada
101. E. F. Babelay
102. E. J. Barber
103. H. P. Barringer
104. J. C. Barton
105. A. S. Berman
106. H. A. Bernhardt
107. Barbara S. Bishop
108. H. D. Culpepper
109. J. T. Dalton
110–124. E. C. Evans
125. J. Farquharson
126. R. L. Farrar, Jr.
127. W. W. Harris
128–130. W. L. Harwell
131. E. T. Henson
132. A. P. Huber
133. J. L. Liverman
134. Nakwan Cho
135. J. G. Green

136. H. G. MacPherson
137. G. R. Jamieson
138. E. C. Johnson
139. T. J. Lewis
140. L. L. McCauley
141. C. E. Nunley
142. P. R. Vanstrum
143. D. A. Waters
144. C. W. Weber
145. S. J. Wheatley
146. R. H. Stevens
147. W. J. Wilcox, Jr.
148–149. Biology Library
150–152. Central Research Library
153. Reactor Division Library
154–155. ORNL – Y-12 Technical Library Document Reference Section
156–195. Laboratory Records Department
196. Laboratory Records, ORNL, R.C.
197. Laboratory Shift Supervisor

EXTERNAL DISTRIBUTION

198. D. J. Davis, NIAID (Director), Bethesda, Maryland
199. R. W. McNamee, Union Carbide Corporation, New York
200. G. A. Andrews, ORINS
201. C. Baker, National Cancer Institute, Bethesda, Maryland
202. F. Baronowski, AEC Production Division, Washington, D.C.
203. N. F. Barr, Atomic Energy Commission, Washington, D.C.
204. N. Berlin, National Cancer Institute, Bethesda, Maryland
205. H. E. Bond, U.S. Naval Radiological Defense Laboratory, San Francisco, California
206. Myron Brakke, U.S. Department of Agriculture, Agriculture Research Service, Plant Physiol. Department, University of Nebraska, Lincoln 3, Nebraska
207. H. D. Bruner, Atomic Energy Commission, Washington, D.C.
208. W. R. Bryan, National Cancer Institute, Bethesda, Maryland
209. J. C. Bugher, Puerto Rico Nuclear Center, Rio Piedras, P.R.
210. W. W. Burr, Jr., Atomic Energy Commission, Washington, D.C.
211. R. M. Chanock, National Institute of Allergy and Infectious Diseases, Bethesda, Maryland
212. R. A. Charpie, Union Carbide Corporation, New York
213. M. A. Churchill, Chief, Stream Sanitation Staff, Edney Bldg., TVA, Chattanooga, Tennessee
214. W. D. Claus, Atomic Energy Commission, Washington, D.C.
215. Helen Coates, National Institute of Allergy and Infectious Diseases, Bethesda, Maryland
216. B. T. Cole, Department of Zoology, University of South Carolina, Columbia, S.C.
217. E. Dapper, U.S. Army Chemical Corps, Fort Detrick, Maryland
218. C. M. Davidson, Environmental Hygiene Branch, Edney Bldg., TVA, Chattanooga, Tennessee
219. W. W. Davis, Eli Lilly Co., Indianapolis, Indiana
220. O. M. Derryberry, Director of Health and Safety, Edney Bldg., TVA, Chattanooga, Tennessee
221. Harold S. Diehl, Sr., Vice President for Research in Medical Affairs, American Cancer Society, 521 W. 57th St., New York 19, New York
222. C. L. Dunham, Atomic Energy Commission, Washington, D.C.
223. K. M. Endicott, National Cancer Institute, Washington, D.C.
224. S. G. English, Assistant General Manager for Research and Development, AEC, Washington, D.C.
225. J. L. Fahey, National Cancer Institute, Bethesda, Maryland
226. E. Frei, National Cancer Institute, Bethesda, Maryland
227. F. E. Gartrell, Assistant Director of Health and Safety, Edney Bldg., TVA, Chattanooga, Tennessee
228. H. Bentley Glass, Johns Hopkins University, Baltimore, Maryland
229. Donald A. Glaser, Virus Lab., U. of Calif., Berkeley 4, Calif.
230. H. N. Glassman, U.S. Army Chemical Corps, Fort Detrick, Maryland
231. E. Grabowski, AEC Production Division, Washington, D.C.
232. S. T. Grey, Food and Drug Administration, Washington, D.C.

233. N. S. Hall, University of Tennessee, Knoxville
234. John Harris, AEC Public Relations Division, ORO
235. Fred J. Hodges, University of Michigan, Medical Center, Ann Arbor
236. E. C. Horn, Department of Zoology, Duke University, Durham, N.C.
237. J. G. Horsfall, Connecticut Agricultural Experimental Station, New Haven
238. R. D. Housewright, U.S. Army Chemical Corps, Fort Detrick, Maryland
239. R. J. Huebner, National Cancer Institute, Bethesda, Maryland
240. J. S. Kirby-Smith, Atomic Energy Commission, Washington, D.C.
241. R. M. Kniseley, ORINS Medical Division
242. K. W. Kohn, National Cancer Institute, Bethesda, Maryland
243. P. Kotin, National Cancer Institute, Bethesda, Maryland
244. E. L. Kuff, National Cancer Institute, Bethesda, Maryland
245. W. T. Lammers, Davidson College, Davidson, N.C.
246. A. D. Langmuir, Chief, Epidemiology Branch, Communicable Disease Center, Atlanta, Georgia
247. R. E. Learmouth, National Cancer Institute, Bethesda, Maryland
248. R. F. Loeb, College of Physicians and Surgeons, Columbia University, New York
249. W. H. Magruder, National Cancer Institute, Bethesda, Maryland
250. W. E. McMahon, Atomic Energy Commission, ORO
251. R. G. Meader, National Cancer Institute, Bethesda, Maryland
252. J. L. Melnick, Department of Virology and Epidemiology, Baylor University, College of Medicine, Houston, Texas
253. G. R. Mider, National Cancer Institute, Bethesda, Maryland
254. Carl V. Moore, Washington University, St. Louis, Missouri
255. P. T. Mora, National Cancer Institute, Bethesda, Maryland
256. J. E. Moynahan, National Institutes of Health, Bethesda, Maryland
257. M. A. Mufson, National Institute of Allergy and Infectious Diseases, Bethesda, Maryland
258. W. G. Pollard, ORINS
259. C. A. Price, Department of Plant Physiol., Rutgers·The State University, New Brunswick, N.J.
260. R. Quimby, National Aeronautics and Space Administration, Washington, D.C.
261. H. M. Roth, Research and Development Division, AEC, ORO
262. W. P. Rowe, National Institute of Allergy and Infectious Diseases, Bethesda, Maryland
263. P. S. Sarma, National Institute of Allergy and Infectious Diseases, Bethesda, Maryland
264. John Schacter, Union Carbide Corporation, New York
265. D. G. Sharp, University of North Carolina, Department of Biophysics, Chapel Hill
266. Byron T. Shaw, Administrator, Agricultural Research Service, U.S. Department of Agriculture, Washington, D.C.
267. C. S. Shoup, Atomic Energy Commission, Oak Ridge
268. R. G. Smith, Food and Drug Administration, Washington, D.C.
269. H. A. Sober, National Cancer Institute, Bethesda, Maryland
270. Sol Spiegleman, Department of Microbiology, University of Illinois, Urbana
271. W. M. Stanley, Virus Laboratory, University of California, Berkeley
272. S. R. Tipton, Department of Zoology, University of Tennessee, Knoxville
273. John Totter, Atomic Energy Commission, Washington, D.C.
274. Rodes Trautman, Plum Island Lab., USDA, Greenport, L.I., New York
275. Shields Warren, New England Deaconess Hospital, Boston, Massachusetts
276. A. G. Wedum, U.S. Army Chemical Corps, Fort Detrick, Maryland
277. J. White, National Cancer Institute, Bethesda, Maryland
278. H. G. Wood, Western Reserve University, Cleveland, Ohio
279. M. Zelle, Argonne National Laboratory, Argonne, Illinois
280. R. E. Stevenson, National Cancer Institute, Bethesda, Maryland
281. A. B. Sabin, Children's Hospital Research Foundation, Cincinnati, Ohio

282. C. E. Carter, Western Reserve University, Cleveland, Ohio
283. E. R. Stadtman, National Heart Institute, Bethesda, Maryland
284–288. C. G. Zubrod, National Cancer Institute, Bethesda, Maryland
289. Atomic Energy Commission, Washington, D.C.
290. General Electric Company, Richland, Washington
291. New York Operations Office
292. AEC Patent Branch, Washington, D.C.
293–297. Division of Technical Information Extension, Oak Ridge
298. UCLA Medical Research Laboratory
299. Erwin Chargoff, Columbia University, New York, N.Y.
300. R. D. Hotchkiss, The Rockefeller Institute, New York
301. Curt Stern, University of California, Berkeley
302. M. M. Wintrobe, University of Utah, Salt Lake City
303. Arne Tiselius, University of Uppsala, Uppsala, Sweden
304. Peter Alexander, Chester Beatty Cancer Institute, London, England
305. Wayne Rundles, Medical School, Duke University
306. J. A. Swartout, Asst. Gen. Mgr. for Reactors, USAEC, Washington, D.C.
307. Biomedical Library, University of California, Center for the Health Sciences, Los Angeles, California
308–382. Henry H. Bloom, Chief, Vaccine Development Branch, National Institute of Allergy and Infectious Diseases, Bethesda, Maryland