OAK RIDGE NATIONAL LABORATORY LIBRARIES
3 4456 0548194 8

NTRAL RESEARCH LIBRARY
DOCUMENT COLLECTION

2

ORNL-3895
UC-34 – Physics
TID-4500 (46th ed.)

ON THE BOUND STATES OF AN ELECTRON IN THE FIELD OF A PERMANENT ELECTRIC DIPOLE

J. E. Turner
Kenneth Fox

CENTRAL RESEARCH LIBRARY
DOCUMENT COLLECTION
LIBRARY LOAN COPY
DO NOT TRANSFER TO ANOTHER PERSON
If you wish someone else to see this document, send in name with document and the library will arrange a loan.

OAK RIDGE NATIONAL LABORATORY
operated by
UNION CARBIDE CORPORATION
for the
U.S. ATOMIC ENERGY COMMISSION

Printed in USA. Price $3.00. Available from the Clearinghouse for Federal Scientific and Technical Information, National Bureau of Standards, U.S. Department of Commerce, Springfield, Virginia

LEGAL NOTICE

This report was prepared as an account of Government sponsored work. Neither the United States, nor the Commission, nor any person acting on behalf of the Commission:

A. Makes any warranty or representation, expressed or implied, with respect to the accuracy, completeness, or usefulness of the information contained in this report, or that the use of any information, apparatus, method, or process disclosed in this report may not infringe privately owned rights; or

B. Assumes any liabilities with respect to the use of, or for damages resulting from the use of any information, apparatus, method, or process disclosed in this report.

As used in the above, "person acting on behalf of the Commission" includes any employee or contractor of the Commission, or employee of such contractor, to the extent that such employee or contractor of the Commission, or employee of such contractor prepares, disseminates, or provides access to, any information pursuant to his employment or contract with the Commission, or his employment with such contractor.

ORNL-3895

Contract No. W-7405-eng-26

HEALTH PHYSICS DIVISION

ON THE BOUND STATES OF AN ELECTRON IN THE FIELD OF A PERMANENT ELECTRIC DIPOLE

J. E. Turner and Kenneth Fox

DECEMBER 1965

OAK RIDGE NATIONAL LABORATORY
Oak Ridge, Tennessee
operated by
UNION CARBIDE CORPORATION
for the
U. S. ATOMIC ENERGY COMMISSION

OAK RIDGE NATIONAL LABORATORY LIBRARIES

3 4456 0548194 8

CONTENTS

Page

Abstract 1

I. Introduction 2

II. Classical Motion of an Electron in a Dipole Field 3

III. Quantum Mechanical Bound States of an Electron in a Finite Dipole Field 16

A. Review of Numerical Calculation by Wallis *et al.* 16

B. Variational Calculations 18

IV. Quantum Mechanical Bound States of an Electron in a Point Dipole Field 28

A. Separability of Wave Equation 28

B. Variation Calculations 32

V. Uncertainty Principle and Bound States of an Electron in a Dipole Field 40

Summary 43

References 46

ON THE BOUND STATES OF AN ELECTRON IN THE FIELD OF A PERMANENT ELECTRIC DIPOLE

J. E. Turner† and Kenneth Fox‡

ABSTRACT

The problem of the quantum mechanical interaction of an electron with a permanent electric dipole finds application in studies of electron interactions with polar molecules and in certain solid state models. The problem also has intrinsic interest in that it represents a relatively simple physical system about which not much is known. Most of what is known about the system is contained in the 1960 paper of Wallis, Herman, and Milnes in which the Schrödinger equation was integrated numerically to obtain the dependence of the ground- and several excited-state energies on the value of the dipole moment. The smallest value of the dipole moment for which these calculations were made was $D = 0.840\ ea_0 = 2.14 \times 10^{-18}$ esu-cm, which is larger than values for a number of important molecules (e.g., H_2O, D_2O, NH_3, HCl, etc.).

The present report gives some additional results for the electron-permanent dipole system. (1) An exact analysis based on Hamilton-Jacobi theory shows that electronic bound states exist classically for arbitrarily weak dipoles. (2) A quantum mechanical analysis using a trial function of the form $\Psi = \exp(-\alpha r^t)(C_0Y_{00} + C_1Y_{10})$, where C_0, C_1, α, and t are variational parameters, Y_{00} and Y_{10} are S- and P-state angular momentum eigenfunctions, and r is the electron's radial coordinate, shows that a bound state exists in the field of both a point dipole and a finite dipole (in the limit of very weak binding) with a dipole moment as small as 1.65×10^{-18} esu-cm. This is lower than the smallest value of Wallis *et al.* (3) A semi-classical argument based on the uncertainty principle suggests that there is a minimum value of the dipole moment required to bind an electron. A rough estimate indicates that the minimum value may be $D = 0.2 \times 10^{-18}$ esu-cm.

---

†Health Physics Division, Oak Ridge National Laboratory.

‡Department of Physics, University of Tennessee.

I. INTRODUCTION

This report contains calculations and results on the problem of the bound states of an electron (or other charged particle) moving in the field of a finite dipole.[1] Apparently this system, which is complicated by the non-central nature of the force field, has not been solved either classically or quantum mechanically for arbitrarily small dipole moments.

The reasons for our interest in this problem are the following:

(1) Interactions between electrons and molecules are studied by means of swarm experiments in which electrons diffuse through gas molecules.[2] Recent experimental results[3] on diffusion cross sections in mixtures of certain polar molecules with ethylene are in disagreement with the theoretical predictions.[4,5] To account for this discrepancy, it was suggested[3] that electrons might be captured into bound or quasi-bound states by the polar molecules.

The capture probability for this process was calculated[6] and qualitatively accounts for the discrepancy. This calculation, in which a variational wave function was used for an electron in the field of a point dipole, led to an investigation of other variational wave functions for the point and finite dipoles, as described in Sections III and IV.

(2) Recently the energy eigenvalues of an electron moving in the field of a finite dipole were calculated by numerical integration of the Schrödinger equation.[7] These calculations were done for dipole moments only as small as 2.14×10^{-18} esu-cm; convergence in the numerical solutions became poor below that value. It is important to know whether bound states exist for smaller values of the dipole moment. The dipole moments of many important molecules (such as H_2O, H_2S, NH_3, hydrogen halides, NO_2, CO, etc.) are beyond the range of the existing numerical calculations. Furthermore, there is the fundamental question implied by Wallis et al.:[7] Can an electron be bound in the field of a dipole with an arbitrarily small moment?

(3) The present work is an exploration into the domain of singular non-central potentials, about which relatively little has been written. (An important study of singular central potentials in quantum mechanics has been made by K. M. Case.[8])

(4) Understanding the interaction of electrons with polar molecules, such as water, is of potential biophysical significance. The interaction of a charged particle with a finite dipole may also apply to certain models in solid state physics and to the motion of a charged particle in the field of a relatively massive particle-antiparticle pair.[7]

II. CLASSICAL MOTION OF AN ELECTRON IN A DIPOLE FIELD

Both the classical and quantum mechanical equations of motion for an electron in the field of a finite dipole are separable. In this section we analyze the classical bound states of the electron and in the next section the quantum mechanical states. It is shown that there will always be a bound state classically no matter how small the dipole moment is, although it is not clear in the quantum mechanical case whether the same is true.

In Fig. 2-1 we represent an electron of charge $-e$ in the vicinity of a dipole centered at the origin O of coordinates with its charges $+q$ and $-q$ located, respectively, at the positions $z = +a$ and $z = -a$. The magnitude of the dipole moment is $D = 2qa = qR$. The cylindrical coordinates (ρ, φ, z) of the electron are given in terms of the cartesian coordinates (x, y, z) by the relations $x = \rho\cos\varphi$, $y = \rho\sin\varphi$, and $z = z$. The Hamiltonian of the electron is invariant under rotations of the coordinates about the Z-axis and hence is cyclic in the variable φ. The motion of the electron will thus be characterized by the conservation of angular momentum about the Z-axis. We can, therefore, transform the problem of the electron's motion from three dimensions to two dimensions, viz., to motion in a rotating plane through the Z-axis. Furthermore, as shown explicitly below, the two-dimensional problem is separable in elliptic coordinates.

ORNL-DWG. 65-8781

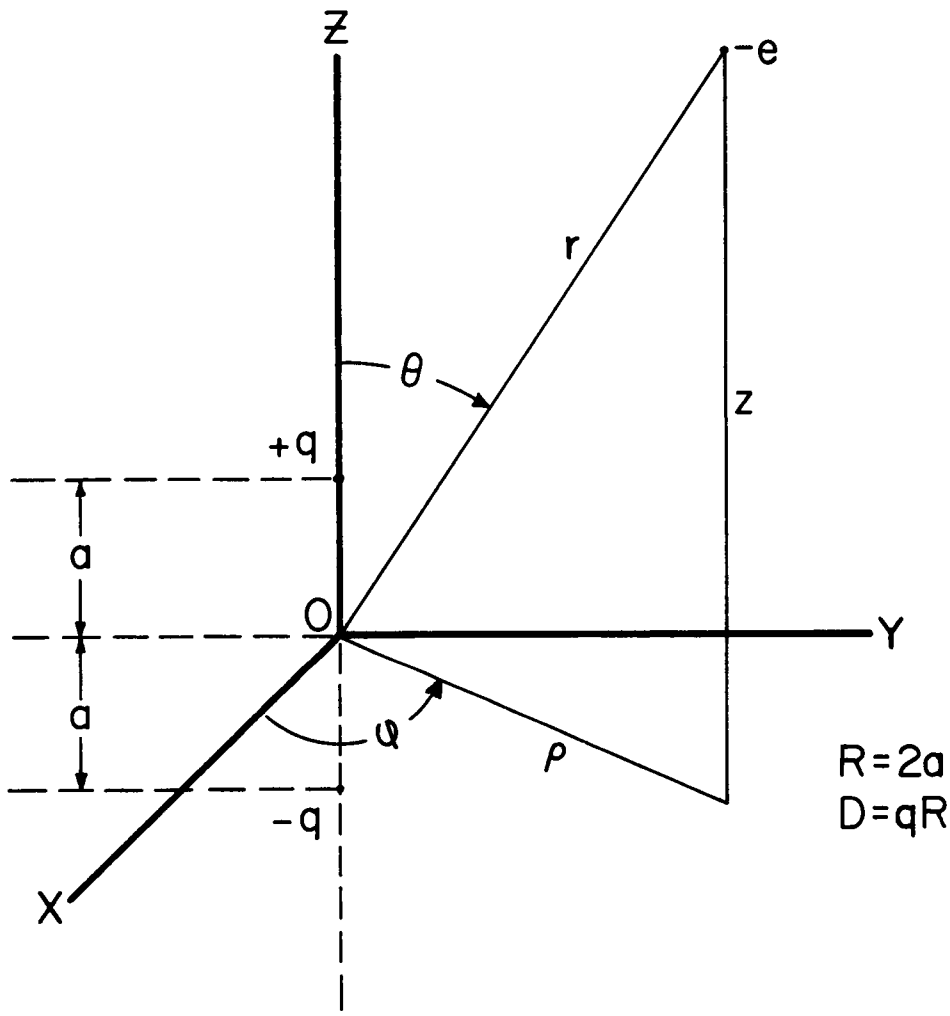

Fig. 2-1. Spherical and Cylindrical Coordinate Reference Systems. The dipole moment is D = 2qa = qR.

We write expressions for the potential and kinetic energies of the electron in elliptic coordinates, define conjugate momenta, and write the Hamiltonian describing the motion of the electron. Next the Hamilton-Jacobi equation, which is separable in these coordinates, is formed. Finally, we write the phase integrals, which determine the classical orbits without a detailed numerical solution of the problem.

Elliptic coordinates (ξ, η) are defined in Fig. 2-2 by

$$\xi = \frac{r_1 + r_2}{R} \qquad (1 \leq \xi \leq \infty)$$
$$\eta = \frac{r_1 - r_2}{R} \qquad (-1 \leq \eta \leq 1) \tag{2-1}$$

where r_1 and r_2 are the distances of the electron from the charges +q and -q. In three dimensions surfaces of constant ξ and η define, respectively, ellipsoids and hyperboloids of revolution. The potential energy of the electron is

$$V = qe\left(\frac{1}{r_2} - \frac{1}{r_1}\right). \tag{2-2}$$

From Eq. (2-1) we have

$$r_1 = \frac{R}{2}(\xi + \eta)$$
$$r_2 = \frac{R}{2}(\xi - \eta) \tag{2-3}$$

so that the potential energy in elliptic coordinates is

$$V = \frac{4qe}{R} \cdot \frac{\eta}{\xi^2 - \eta^2}. \tag{2-4}$$

In cylindrical coordinates the kinetic energy of the electron is

$$T = \frac{1}{2}m\left(\dot{\rho}^2 + \rho^2\dot{\varphi}^2 + \dot{z}^2\right), \tag{2-5}$$

ORNL-DWG. 65-8782

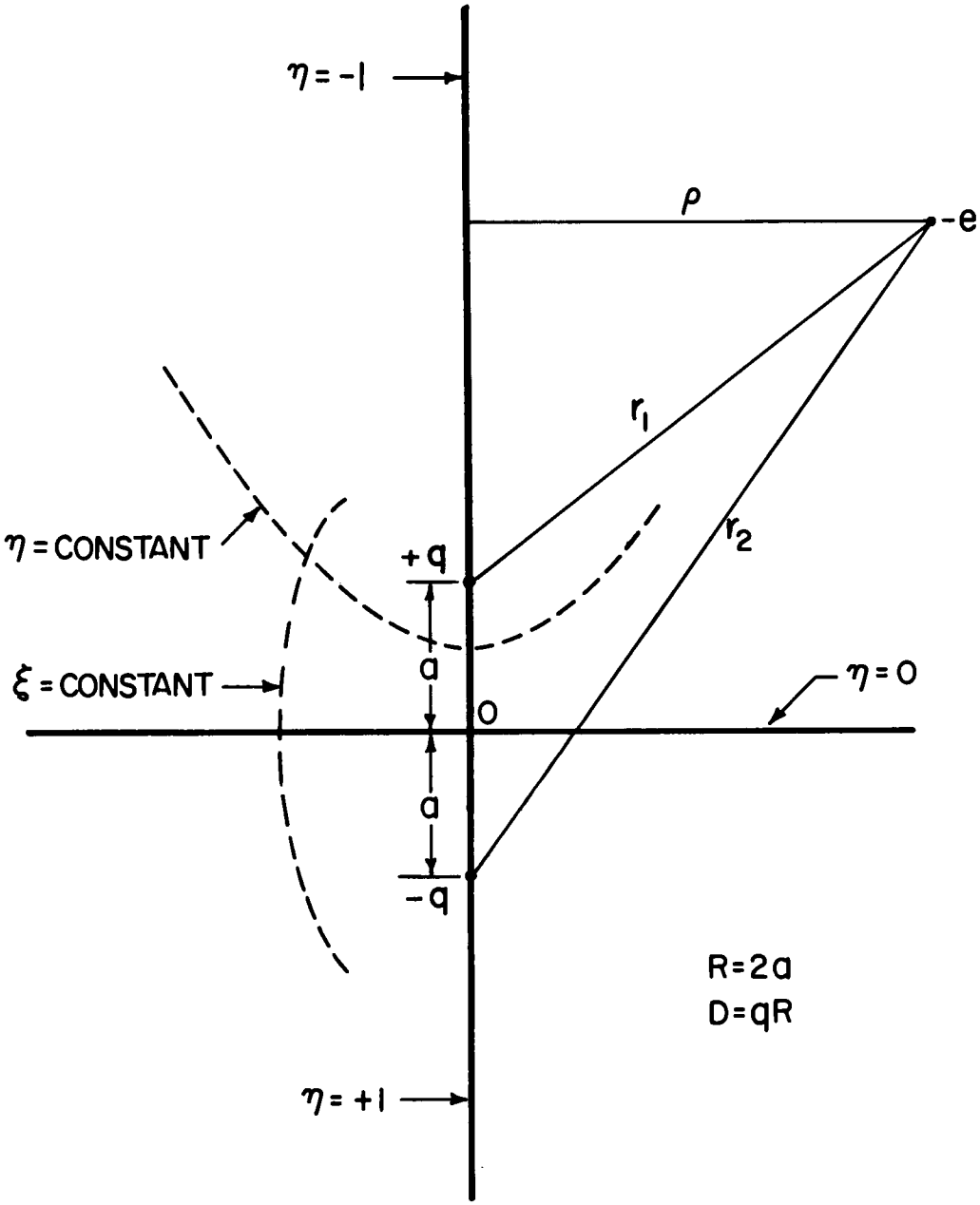

Fig. 2-2. Elliptic Coordinate Reference System. The dipole moment is $D = 2qa = qR$.

where m is the mass of the electron and the dots denote differentiation with respect to time. From the geometry in Fig. 2-2 and from Eq. (2-3) we write the equations relating (ρ, z) and (ξ, η):

$$r_1^2 = \rho^2 + (z-a)^2 = a^2(\xi+\eta)^2$$
$$r_2^2 = \rho^2 + (z+a)^2 = a^2(\xi-\eta)^2. \qquad (2\text{-}6)$$

Solving for ρ and z in terms of ξ and η and performing the time differentiations, we obtain

$$T = \frac{ma^2}{2}\left[(\xi^2-\eta^2)\left(\frac{\dot{\xi}^2}{\xi^2-1}+\frac{\dot{\eta}^2}{1-\eta^2}\right)+(\xi^2-1)(1-\eta^2)\dot{\varphi}^2\right]. \qquad (2\text{-}7)$$

The momenta conjugate to the coordinates (ξ, η, φ) are defined by the following partial derivatives:

$$p_\xi = \frac{\partial T}{\partial \dot{\xi}} = ma^2(\xi^2-\eta^2)\frac{\dot{\xi}}{\xi^2-1}$$
$$p_\eta = \frac{\partial T}{\partial \dot{\eta}} = ma^2(\xi^2-\eta^2)\frac{\dot{\eta}}{1-\eta^2} \qquad (2\text{-}8)$$
$$p_\varphi = \frac{\partial T}{\partial \dot{\varphi}} = ma^2(\xi^2-1)(1-\eta^2)\dot{\varphi}.$$

Writing the kinetic energy in terms of these conjugate momenta gives for the Hamiltonian, H = T + V,

$$H = \frac{1}{\xi^2-\eta^2}\left\{\frac{1}{2ma^2}\left[(\xi^2-1)p_\xi^2+(1-\eta^2)p_\eta^2+\left(\frac{1}{\xi^2-1}+\frac{1}{1-\eta^2}\right)p_\varphi^2\right]+\frac{2qe}{a}\eta\right\}. \qquad (2\text{-}9)$$

This expression is consistent with that given for the hydrogen ion-molecule H_2^+, for which both electric charges on the Z-axis in Fig. 2-1 are positive.[9] Hamilton's canonical equation $\dot{p}_\varphi = -\partial H/\partial\varphi$ implies at once from Eq. (2-9) that p_φ is a constant of the motion since φ does not appear explicitly in the

Hamiltonian. We are left with treating the motion in terms of ξ and η.

The Hamilton-Jacobi equation is obtained from Eq. (2-9) by writing E in place of H for the total energy and $\partial W/\partial\xi$ and $\partial W/\partial\eta$ in place of the momenta p_ξ and p_η.[10] The quantity W is Hamilton's characteristic function. It generates a canonical transformation from (ξ, η) and their conjugate momenta (p_ξ, p_η) to new variables for which all the momenta are constants of the motion. We treat W as a function of ξ, η, and the new conjugate momenta. Thus we obtain from Eq. (2-9)

$$\left[\frac{\xi^2-1}{2ma^2}\left(\frac{\partial W}{\partial\xi}\right)^2+\frac{p_\varphi^2}{2ma^2}\cdot\frac{1}{\xi^2-1}-E\xi^2\right]+\left[\frac{1-\eta^2}{2ma^2}\left(\frac{\partial W}{\partial\eta}\right)^2+\frac{p_\varphi^2}{2ma^2}\cdot\frac{1}{1-\eta^2}+E\eta^2+\frac{2qe}{a}\eta\right]=0\,. \tag{2-10}$$

We assume that W is a sum of two functions, $W = W_\xi(\xi) + W_\eta(\eta)$, where W_ξ and W_η depend only upon the single coordinate shown (and the new momenta). The first bracketed term in Eq. (2-10) then depends only on the coordinate ξ and the second term only on η. This equation can be valid for all values of the independent variables (ξ, η) only if the two bracketed terms are both constant. Denoting the values of these terms by the constants $\pm K$ gives for the separated form of the Hamilton-Jacobi equation

$$\begin{aligned}\left(\frac{\partial W}{\partial\xi}\right)^2&=\frac{2ma^2}{\xi^2-1}\left(K-\frac{p_\varphi^2}{2ma^2}\cdot\frac{1}{\xi^2-1}+E\xi^2\right)\\ \left(\frac{\partial W}{\partial\eta}\right)^2&=\frac{2ma^2}{1-\eta^2}\left(-K-\frac{p_\varphi^2}{2ma^2}\cdot\frac{1}{1-\eta^2}-E\eta^2-\frac{2qe}{a}\eta\right).\end{aligned} \tag{2-11}$$

It follows that

$$\begin{aligned}p_\xi&=\frac{\partial W}{\partial\xi}=\frac{\sqrt{-2ma^2E}}{\xi^2-1}\left(-\xi^4+C\xi^2-A\right)^{\frac{1}{2}}\\ p_\eta&=\frac{\partial W}{\partial\eta}=\frac{\sqrt{-2ma^2E}}{1-\eta^2}\left(-\eta^4+B\eta^3+C\eta^2-B\eta-A\right)^{\frac{1}{2}},\end{aligned} \tag{2-12}$$

where the quantities A, B, and C are given by

$$A = -\frac{K}{E} - \frac{p_\varphi^2}{2ma^2E}$$

$$B = -\frac{2qe}{aE} \tag{2-13}$$

$$C = 1 - \frac{K}{E}$$

and satisfy the identity

$$A + 1 - C = -\frac{p_\varphi^2}{2ma^2E} \quad . \tag{2-14}$$

The motion of the electron takes place in ranges of values of ξ and η for which the momenta in Eq. (2-12) are real. For bound states of the electron in the field of the dipole, $E<0$ and hence the quantities in parentheses in Eq. (2-12) cannot be negative. That is,

$$F(\xi) \equiv -\xi^4 + C\xi^2 - A \geq 0$$

$$G(\eta) \equiv -\eta^4 + B\eta^3 + C\eta^2 - B\eta - A \geq 0 \, . \tag{2-15}$$

The classical motion takes place between the real zeros of $F(\xi)$ and $G(\eta)$ in regions where the functions are positive or zero.

We first analyze the behavior of $F(\xi)$. The positive zeros of this function are

$$\xi_1 = \frac{1}{\sqrt{2}}\sqrt{C - \sqrt{C^2 - 4A}}$$

$$\xi_2 = \frac{1}{\sqrt{2}}\sqrt{C + \sqrt{C^2 - 4A}} \quad . \tag{2-16}$$

It is implicit in Eq. (2-16) that $C > 0$ and $C^2 \geq 4A$ in order that ξ_1 and ξ_2 be real. From Eq. (2-13) the condition $C^2 \geq 4A$ can be expressed as

$$\frac{p_\varphi^2}{-2ma^2E} \leq \frac{1}{4}\left(1 + \frac{K}{E}\right)^2 . \tag{2-17}$$

Since $\xi \geq 1$ by our definition of coordinates [Eq. (2-1)], we require that $F(\xi)$ have its positive zeros not smaller than one. This requirement can be expressed as

$$\xi_1^2 = \frac{1}{2}\left(C - \sqrt{C^2 - 4A}\right) \geq 1 . \tag{2-18}$$

This inequality gives

$$C \geq 2 + \sqrt{C^2 - 4A} \geq 2 . \tag{2-19}$$

Since $C \equiv 1 - K/E$, Eq. (2-19) implies that $-K/E \geq 1$; in addition, Eq. (2-13) implies that $A \geq 1$. If we carry Eq. (2-19) further, we find that $A + 1 - C \geq 0$, as already implied for $E < 0$ by Eq. (2-14).

The extrema of $F(\xi)$ are obtained by solving

$$\frac{dF}{d\xi} = -4\xi^3 + 2C\xi = 0 , \tag{2-20}$$

which has the roots $\xi = 0, \pm\sqrt{C/2}$. Clearly $\xi = 0$ is a minimum since $d^2F/d\xi^2 = 2C > 0$ at this point. Furthermore, $F(0) = -A \leq -1$. Also $\xi = \pm\sqrt{C/2}$ are maxima since $d^2F/d\xi^2 = -4C < 0$ at these points; $F(\pm\sqrt{C/2}) = (C^2/4) - A \geq 0$.

The form of $F(\xi)$ is illustrated in Fig. 2-3 for a case of physically allowed motion. The function is symmetric $[F(\xi) = +F(-\xi)]$ and $F(\pm\infty) = -\infty$. The classical motion takes place in the range $\xi_1 \leq \xi \leq \xi_2$ in which $F(\xi) \geq 0$, as indicated by the shaded region in this figure.

ORNL DWG. 65-8783

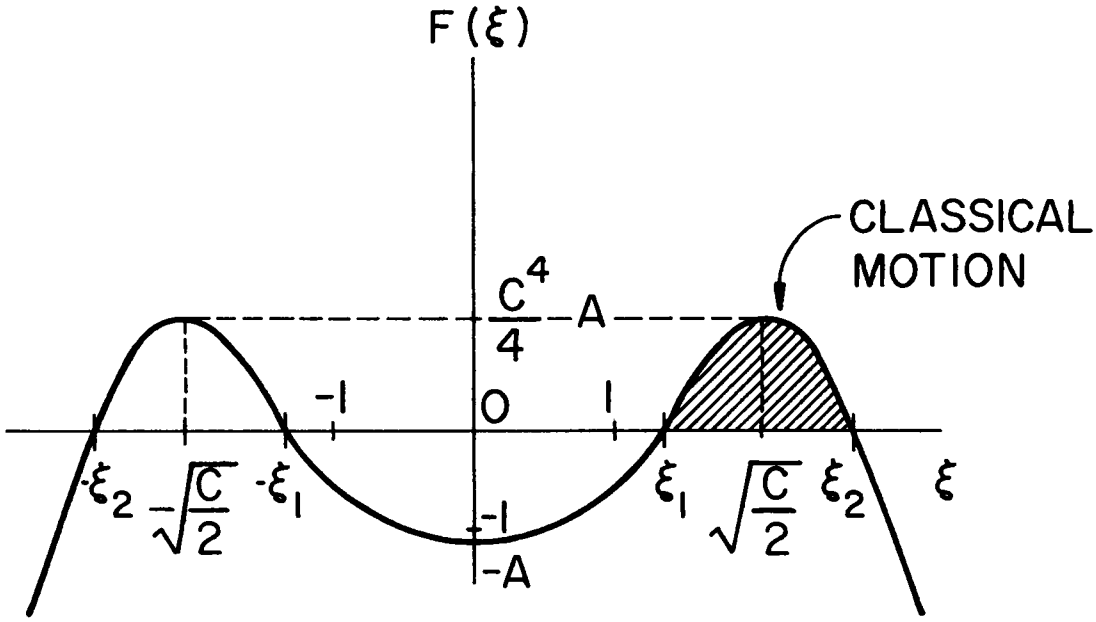

Fig. 2-3. Analysis of $F(\xi)$. The classical motion of an electron in the field of a dipole takes place in the shaded interval.

For small binding energies the roots ξ_1 and ξ_2 have a simple form. Writing

$$\sqrt{C^2 - 4A} = \sqrt{\left(1 - \frac{K}{E}\right)^2 + 4\left(\frac{K}{E} + \frac{p_\varphi^2}{2ma^2E}\right)} \quad , \tag{2-21}$$

we obtain for small E

$$\sqrt{C^2 - 4A} \cong -1 - \frac{K}{E} - \frac{p_\varphi^2}{ma^2K} \quad . \tag{2-22}$$

To this order, the roots are

$$\begin{aligned} \xi_1 &\cong \sqrt{1 + \frac{p_\varphi^2}{2ma^2K}} \\ \xi_2 &\cong \sqrt{-\frac{K}{E} - \frac{p_\varphi^2}{2ma^2K}} \quad . \end{aligned} \tag{2-23}$$

As $E \to 0$, $\xi_2 \to \infty$ and so the electron orbit extends to great distances.

For $p_\varphi = 0$, $\xi_1 = 1$ and the electron orbit crosses the dipole axis between the charges. For $p_\varphi \neq 0$, the point of closest approach is not on the dipole axis.

The function $G(\eta)$ in Eq. (2-15) is the sum of an even and an odd function:

$$G(\eta) = G_E(\eta) + G_O(\eta) \tag{2-24}$$

with

$$\begin{aligned} G_E(\eta) &= -\eta^4 + C\eta^2 - A \\ G_O(\eta) &= B\eta(\eta^2 - 1). \end{aligned} \tag{2-25}$$

The function G_E, which is shown as one of the dashed curves in Fig. 2-4, is identical to the function F, above, and hence has zeros at $\eta = \pm\xi_1$ and $\eta = \pm\xi_2$. The function $G_0(\eta)$ has zeros at $\eta = 0, \pm 1$. The slope of $G_0(\eta)$ at the origin is $-B$, which by Eq. (2-13) is negative for $E < 0$. The extrema of $G_0(\eta)$ occur at $\eta = \pm 1/\sqrt{3}$; $G_0(-1/\sqrt{3}) = +2B/3\sqrt{3}$ is a maximum, and $G_0(+1/\sqrt{3}) = -2B/3\sqrt{3}$ is a minimum. As $\eta \to \pm\infty$, $G_0 \to \pm\infty$. The shape of the function $G_0(\eta)$ is shown by the other dashed curve in Fig. 2-4. The sum $G(\eta)$ is shown by the solid curve. As seen in the figure, the region $-1 \leq \eta \leq +1$, which contains all kinematically allowed values of η, contains bound orbits only when the value of B is so large that $G(\eta)$ has two real zeros for $-1 \leq \eta < 0$.

The region of allowed classical bound-state orbits is indicated in the ξ-η plane in Fig. 2-5. The orbits lie in a volume defined in three dimensions by rotating the cross-hatched area about the dipole axis. Classically, the orbit is contained in the upper half-space with $1 \leq \xi_1 \leq \xi \leq \xi_2 < \infty$ and $-1 \leq \eta_2 \leq \eta \leq \eta_1 < 0$; the electron cannot enter the lower half-space ($\eta \geq 0$).

Bound orbits exist for all values of the dipole moment. The radicand in p_η is

$$\begin{aligned} -2ma^2 E\, G(\eta) &= 2ma^2 E \eta^4 + 4mqea\eta(\eta^2 - 1) \\ &\quad - 2ma^2(E - K)\eta^2 - 2ma^2 K - p_\varphi^2 . \end{aligned} \tag{2-26}$$

In the limit of very weak binding, $E \to 0$ and

$$-2ma^2 E G(\eta) \to 2meD\eta(\eta^2 - 1) + 2ma^2 K(\eta^2 - 1) - p_\varphi^2 , \tag{2-27}$$

where we have written $D \equiv 2qa$. For any value of the dipole moment the right hand side of Eq. (2-27)—and hence $G(\eta)$—can be made positive by choosing $p_\varphi = 0$ and K sufficiently small. The only restriction on K is that it be larger than $|E|$, but this is readily satisfied for $E \to 0$. The parameters

ORNL-DWG. 65-8784

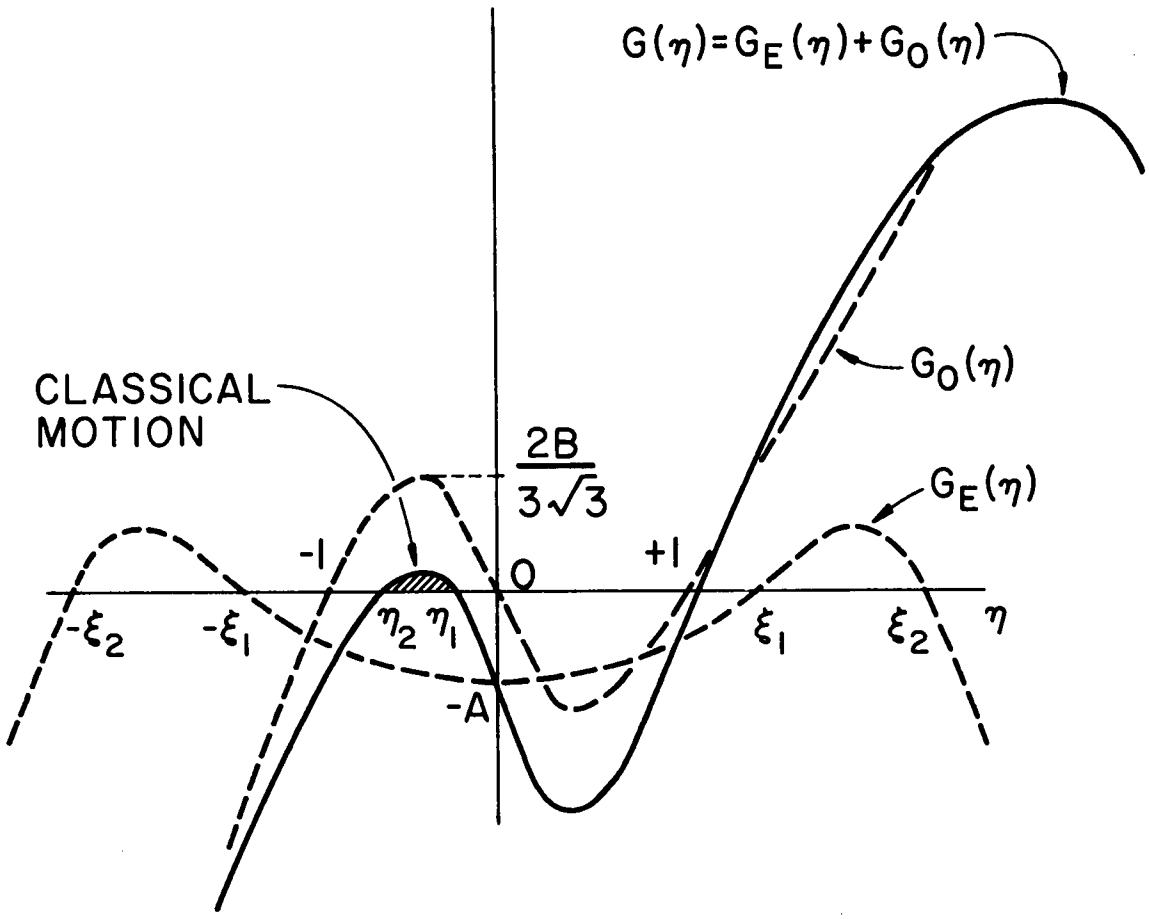

Fig. 2-4. Analysis of $G(\eta)$. The classical motion of an electron in the field of a dipole takes place in the shaded interval.

ORNL-DWG. 65-8785

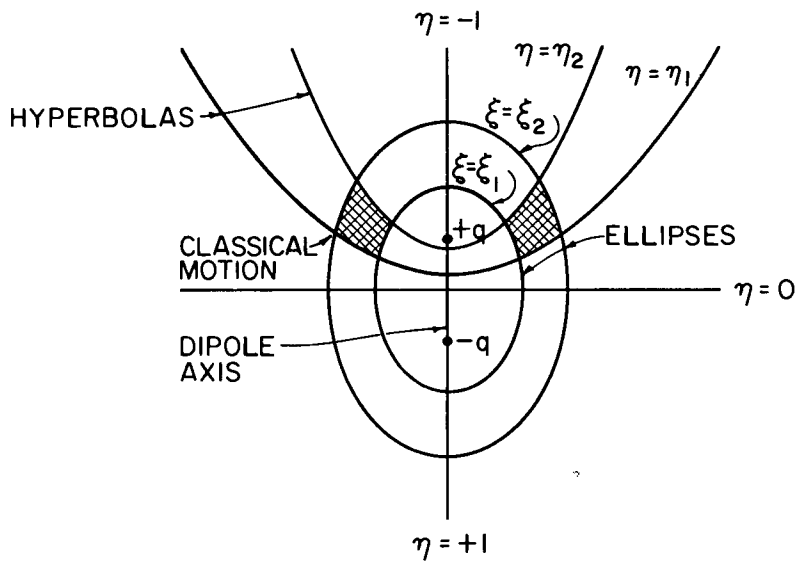

Fig. 2-5. Three Dimensional Region of Classically Allowed Orbits Contained in the Volume Generated by Revolution of the Cross-Hatched Area about the Dipole Axis.

q and a characterizing a given dipole are fixed. In classical physics, the binding energy of the electron is a constant of the motion that can always be made as close to zero as desired by choosing suitable initial conditions. In this way we conclude from Eq. (2-27) that any dipole can bind an electron classically. It is not known whether this result holds quantum mechanically. The argument in Section V based on the uncertainty principle suggests that a minimum value of the dipole moment may be needed.

Detailed classical solutions can be obtained by using action-angle variables. The action variables are the phase integrals

$$\begin{aligned} J_\xi &= \oint p_\xi \, d\xi \\ J_\eta &= \oint p_\eta \, d\eta \, . \end{aligned} \tag{2-28}$$

As seen from Eq. (2-12), the momenta p_ξ and p_η are square roots of rational fractions of fourth-degree polynomials. Except in special circumstances, therefore, the action variables are elliptic integrals.

III. QUANTUM MECHANICAL BOUND STATES OF AN ELECTRON IN A FINITE DIPOLE FIELD

A. Review of Numerical Calculation by Wallis *et al.*

We will review briefly the work by Wallis, Herman, and Milnes[7] on this problem. The Schrödinger equation for the motion of an electron is, in the notation of Fig. 2-2,

$$\left(-\frac{\hbar^2}{2m} \nabla^2 - \frac{eq}{r_1} + \frac{eq}{r_2} \right) \Psi = E \Psi \tag{3-1}$$

where Ψ and E denote the electronic wave function and energy. Elliptic coordinates are introduced as in Eq. (2-1). If a product wave function of the form $\Psi = L(\xi) M(\eta) \Phi(\varphi)$ is assumed, the Schrödinger equation is separable

into the ordinary differential equations

$$\frac{d}{d\xi}\left[(\xi^2-1)\frac{dL}{d\xi}\right]+\left[\frac{1}{2}\left(\frac{R}{a_0}\right)^2\left(\frac{Ea_0}{e^2}\right)\xi^2+A-\frac{m^2}{\xi^2-1}\right]L=0$$

$$\frac{d}{d\eta}\left[(1-\eta^2)\frac{dM}{d\eta}\right]+\left[-\frac{1}{2}\left(\frac{R}{a_0}\right)^2\left(\frac{Ea_0}{e^2}\right)\eta^2-\frac{2qR}{ea_0}\eta-A-\frac{m^2}{1-\eta^2}\right]M=0$$

$$\frac{d^2\Phi}{d\varphi^2}+m^2\Phi=0. \tag{3-2}$$

The quantities m and A are separation constants and $a_o \equiv \hbar^2/me^2$ is introduced to indicate atomic units (a. u.) explicitly. With $q = e$, $p^2 \equiv -\frac{1}{4}R^2E$, and with energy and length expressed in units of $e^2/2a_o$ and a_o, the equations of Wallis et al. are obtained.

The normalized single-valued solutions of the φ-equation are $\Phi(\varphi) = (2\pi)^{-\frac{1}{2}}\exp(\pm im\varphi)$, where m is a positive integer or zero. The solutions for the ξ- and η-equations are expressed as series in orthogonal functions. The numerical coefficients satisfy three-term recursion relations. Requiring that the series converge on the appropriate intervals leads to two equations involving continued fractions. The simultaneous solution of these equations gives the energy eigenvalues.

The ground-state energy has been calculated for values of R from 30 a. u. down to 0. 84 a. u. corresponding to dipole moments D from 76 to 2. 136 (in 10^{-18} esu-cm). The electronic binding energy decreases monotonically as the dipole moment decreases. Because the convergence of one of the continued fractions becomes poor for R less than unity, the energy levels in the range $R < 0.84$ a. u. were not calculated. On the basis of these numerical calculations, no conclusion was drawn on the question of whether the electronic binding energy goes to zero at some finite value of R.

In an earlier note[11] Handler estimated the ground-state electronic energy with a reported accuracy of about 10%. These estimates are

inconsistent with the monotonically decreasing behavior of the binding energy as a function of dipole moment found by Wallis et al. Handler's work is not described in detail; it is difficult to reconcile his results with those of the later extensive numerical calculations.

The dipole moments of water and many other molecules fall into the comparatively unexplored range $D < 2.136 \times 10^{-18}$ esu-cm. In the remainder of this section we describe calculations for finite dipoles and, in the next section, for point dipoles.

B. Variational Calculations

A trial wave function was used to describe an electron in the field of a finite dipole. The function consists of an S- plus P-wave angular part and a hydrogen-like radial part. The expectation value of the Hamiltonian is calculated and minimized. This minimum expectation value can be made zero by the proper choice of dipole moment. Since the true energy of the system is smaller than that given by the variational procedure, a dipole moment larger than that given by the solution of $\langle H \rangle_{min} = 0$ will give an energy less than zero, i.e., a bound state. For the type of variation wave function used, this procedure is shown to give the same minimum dipole moment needed for binding as that obtained for the point dipole in Section IV.

We write the Hamiltonian in spherical coordinates shown in Fig. 2-1. The potential energy $V = eq(1/r_2 - 1/r_1)$ becomes

$$V = -2eq \sum_{k \text{ odd}} \frac{r_<^k}{r_>^{k+1}} P_k(\cos\theta), \tag{3-3}$$

where $r_<$ and $r_>$ are the smaller and larger of r and a, and $P_k(\cos\theta)$ is the Legendre polynomial of order k. The operator corresponding to the kinetic

energy is

$$T = -\frac{\hbar^2}{2m}\nabla^2 = -\frac{\hbar^2}{2m}\left[\frac{1}{r^2}\frac{\partial}{\partial r}\left(r^2\frac{\partial}{\partial r}\right) + \frac{1}{r^2\sin\theta}\cdot\frac{\partial}{\partial\theta}\left(\sin\theta\frac{\partial}{\partial\theta}\right) + \frac{1}{r^2\sin^2\theta}\cdot\frac{\partial^2}{\partial\varphi^2}\right]. \tag{3-4}$$

We take for a variational wave function $\Psi(r\,\theta\varphi) = g(r)\,Y(\theta\varphi)$, where

$$g(r) = 2\left(\frac{Z}{a_0}\right)^{\frac{3}{2}} \exp\left(-\frac{Zr}{a_0}\right) \tag{3-5}$$

and

$$Y(\theta\varphi) = C_0 Y_{00}(\theta\varphi) + C_1 Y_{10}(\theta\varphi). \tag{3-6}$$

The $Y_{\ell m}(\theta\varphi)$ are orthonormal spherical harmonics satisfying the equation

$$\left[\frac{1}{\sin\theta}\cdot\frac{\partial}{\partial\theta}\left(\sin\theta\frac{\partial}{\partial\theta}\right) + \frac{1}{\sin^2\theta}\cdot\frac{\partial^2}{\partial\varphi^2} + \ell(\ell+1)\right]Y_{\ell m}(\theta\varphi) = 0. \tag{3-7}$$

The radial function is normalized, so that

$$\int \Psi^*(r\theta\varphi)\,\Psi(r\theta\varphi)\,d\tau = |C_0|^2 + |C_1|^2. \tag{3-8}$$

We impose the condition

$$|C_0|^2 + |C_1|^2 = 1. \tag{3-9}$$

To calculate $\langle T\rangle$ we first consider $T\Psi(r\,\theta\varphi)$. From Eq. (3-4) we have

$$T\Psi(r\theta\varphi) = -\frac{\hbar^2}{2m}\left[Y(\theta\varphi)\frac{1}{r^2}\cdot\frac{d}{dr}\left(r^2\frac{d}{dr}\right)g(r) - \frac{2C_1}{r^2}\,g(r)\,Y_{10}(\theta\varphi)\right]. \tag{3-10}$$

Then

$$\langle T\rangle = \int \Psi^*(r\theta\varphi)\, T\, \Psi(r\theta\varphi)\, d\tau$$

$$= -\frac{\hbar^2}{2m}\int g^*(r)\, Y^*(\theta\varphi)\left[Y(\theta\varphi)\frac{1}{r^2}\frac{d}{dr}\left(r^2\frac{d}{dr}\right)g(r) - \frac{2C_1}{r^2}\, g(r)\, Y_{10}(\theta\varphi)\right] d\tau$$

$$= -\frac{\hbar^2}{2m}\left(|C_0|^2 + |C_1|^2\right)\int_0^\infty g^*(r)\frac{d}{dr}\left(r^2\frac{d}{dr}\right)g(r)\, dr$$

$$+ \frac{\hbar^2 |C_1|^2}{m}\int_0^\infty g^*(r)\, g(r)\, dr\ . \tag{3-11}$$

The radial integrals are elementary, and the result is

$$\langle T\rangle = \frac{Z^2 e^2}{2a_0}\left(1 + 4|C_1|^2\right). \tag{3-12}$$

Next we calculate

$$\langle V\rangle = \int \Psi^*(r\theta\varphi)\, V\, \Psi(r\theta\varphi)\, d\tau$$

$$= -2eq\int g^*(r)\left[C_0^*\, Y_{00}^*(\theta\varphi) + C_1^*\, Y_{10}^*(\theta\varphi)\right]$$

$$\cdot \sum_{k\ \mathrm{odd}} \frac{r_<^k}{r_>^{k+1}}\, P_k(\cos\theta)\, g(r)\left[C_0 Y_{00}(\theta\varphi) + C_1 Y_{10}(\theta\varphi)\right] d\tau\ . \tag{3-13}$$

The only non-zero contribution to $\langle V\rangle$ from the sum over k comes from $P_1(\cos\theta)$. This follows from the S- plus P-wave character of the wave function. Carrying out the angular integrals, we find

$$\langle V\rangle = -\frac{4eq}{\sqrt{3}}\, \mathrm{Re}(C_0 C_1^*)\int_0^\infty g^*(r)\, \frac{r_<}{r_>^2}\, g(r)\, r^2 dr\ , \tag{3-14}$$

where Re(z) means the real part of the complex quantity z. The radial integral is expressed as the sum of two integrals:

$$\int_0^a g^*(r)\frac{r}{a^2}g(r)r^2dr + \int_a^\infty g^*(r)\frac{a}{r^2}g(r)r^2dr. \tag{3-15}$$

These integrals again are elementary, and when substituted into Eq. (3-14) give

$$\langle V\rangle = -\frac{2\sqrt{3}\,eqa_0}{a^2Z}\,\mathrm{Re}(C_0C_1^*)\left[1-e^{-\varkappa}\left(1+\varkappa+\tfrac{1}{2}\varkappa^2\right)\right], \tag{3-16}$$

where $\varkappa \equiv 2Za/a_o > 0$.

We minimize $\langle H\rangle = \langle T\rangle + \langle V\rangle$ with respect to the variational parameters C_0 and C_1. The quantity $\langle T\rangle$ is positive. The quantity in brackets in $\langle V\rangle$ is also positive. Therefore, as far as the phase of C_0 and C_1 enter, $\langle H\rangle$ will have its lowest numerical value when C_0 and C_1 have the same phase. Thus we can take C_0 and C_1 to be real without loss of generality, so that

$$\langle H\rangle = \frac{Z^2e^2}{2a_0}(1+4C_1^2) - \frac{2\sqrt{3}\,eqa_0\,C_0C_1}{a^2Z}\left[1-e^{-\varkappa}\left(1+\varkappa+\tfrac{1}{2}\varkappa^2\right)\right]. \tag{3-17}$$

We replace C_0 by $\sqrt{1-C_1^2}$ and set the partial derivative of $\langle H\rangle$ with respect to C_1 equal to zero. The solution of this equation is

$$C_1^2 = \frac{1}{2} \pm \frac{2\alpha}{\sqrt{16\alpha^2+\beta^2}}, \tag{3-18}$$

where $\alpha \equiv Z^2e^2/2a_o$ and $\beta \equiv 2\sqrt{3}\,eqa_o[1-e^{-\varkappa}(1+\varkappa+\frac{1}{2}\varkappa^2)]/a^2Z$. Since either choice of sign in Eq. (3-18) gives the same value for the second term in Eq. (3-17), the first term in Eq. (3-17) requires that we take the lower sign for a minimum value of $\langle H\rangle$. Then

$$\langle H\rangle_{min} = 3\alpha - \frac{1}{2}\sqrt{16\alpha^2+\beta^2}. \tag{3-19}$$

For β sufficiently large $\langle H \rangle_{min}$ is negative, corresponding to a bound state. The condition that $\langle H \rangle_{min}$ be negative is $\beta \geq \sqrt{20}\,\alpha$. This can be written

$$\frac{2\sqrt{3}\,eqa_o}{a^2 Z}\left[1 - e^{-\frac{2Za}{a_o}}\left(1 + \frac{2Za}{a_o} + \frac{2Z^2a^2}{a_o^2}\right)\right] \geq \sqrt{20}\,\frac{Z^2e^2}{2a_o}. \quad (3\text{-}20)$$

We analyze Eq. (3-20) by assuming $a = a_o$ and solve for q/e to obtain

$$\frac{q}{e} \geq \frac{1}{2}\sqrt{\frac{5}{3}}\,Z^3\left[1 - e^{-2Z}(1 + 2Z + 2Z^2)\right]^{-1}. \quad (3\text{-}21)$$

The right-hand side of Eq. (3-21) goes to $\sqrt{15}/8$ as Z goes to zero, and to infinity as Z goes to infinity. Furthermore, it is a monotonic increasing function of Z. This demonstrates that there will be binding if Z is small and $q/e \geq \sqrt{15}/8$, which is the lowest value of q/e obtainable for $a = a_o$. The corresponding value of the dipole moment is $D_{min} = 2(\sqrt{15}/8)\,ea_o = 2.46 \times 10^{-18}$ esu-cm. The fact that the right-hand side of Eq. (3-21) is a monotonic increasing function of Z formalizes the intuitive conclusion that the "weaker" the bound state, the smaller the dipole moment required to achieve that binding.

An alternative approach to Eq. (3-20) is to set q = e and solve for a/a_o. Now the unknown appears in the exponential. However, for Z approaching zero, i.e., for very "weakly" bound states, the value of the dipole moment required is again found to be $D_{min} = (\sqrt{15}/4)\,ea_o$.

We next show how the product 2aq representing the dipole moment can be brought in explicitly in Eq. (3-20). In the radial part of the variational wave function, Eq. (3-5), we replace Z by Zq/e. Then Eq. (3-20) becomes

$$\frac{2\sqrt{3}\,e^2a_o}{a^2 Z}\left[1 - e^{-\frac{2Zaq}{ea_o}}\left(1 + \frac{2Zaq}{ea_o} + \frac{2Z^2a^2q^2}{e^2a_o^2}\right)\right] \geq \frac{\sqrt{20}\,Z^2q^2}{2a_o}. \quad (3\text{-}22)$$

If we make the substitutions $D \equiv 2aq$ and $d \equiv ea_o$, and simplify, we get

$$1 - e^{-\frac{ZD}{d}}\left(1 + \frac{ZD}{d} + \frac{Z^2D^2}{2d^2}\right) \geq \frac{\sqrt{15}\, Z^3 D^2}{24 d^2} . \tag{3-23}$$

When Z approaches zero, Eq. (3-23) has the solution $D/d = (\sqrt{15}/4)$, as before.

A lower value of D_{min} can be obtained by starting with a more general variational wave function than that used in the preceeding calculation. We take $\Psi(r\theta\varphi) = g(r)Y(\theta\varphi)$ as before, but now

$$g(r) = n \exp(-\alpha r^t) \tag{3-24}$$

where α and t are variational parameters, and n is a normalization constant. The angular function $Y(\theta\varphi)$ is the same as in Eq. (3-6). The normalization condition

$$\int \Psi^*(r\theta\varphi)\Psi(r\theta\varphi)\, d\tau = 1 \tag{3-25}$$

becomes

$$|n|^2(|C_0|^2 + |C_1|^2)\int_0^\infty e^{-2\alpha r^t} r^2 dr = 1. \tag{3-26}$$

Using the substitution

$$x = 2\alpha r^t \quad , \quad \text{or} \quad r = \left(\frac{x}{2\alpha}\right)^{\frac{1}{t}} , \tag{3-27}$$

we can write the integral in Eq. (3-26) as

$$\frac{1}{t}\left(\frac{1}{2\alpha}\right)^{\frac{3}{t}} \int_0^\infty e^{-x}\, x^{\frac{3}{t}-1} dx . \tag{3-28}$$

The integral in this expression is $\Gamma(3/t)$. The gamma function $\Gamma(\xi)$ is defined

for all $\zeta > 0$ by the integral

$$\Gamma(\zeta) \equiv \int_0^\infty e^{-x} x^{\zeta-1} dx \tag{3-29}$$

and satisfies the recursion relation

$$\Gamma(\zeta+1) = \zeta\Gamma(\zeta). \tag{3-30}$$

Then we obtain for the normalization constant, after imposing the condition Eq. (3-9),

$$n = \left[\frac{t(2\alpha)^{\frac{3}{t}}}{\Gamma(\frac{3}{t})}\right]^{\frac{1}{2}} \tag{3-31}$$

where we have assumed n to be real.

We proceed to the variational calculation, omitting some details since this calculation is similar to the earlier one. To calculate $\langle T \rangle$ we first write

$$T\Psi(r\theta\varphi) = -\frac{n\hbar^2}{2mr^2}\Big\{C_0 e^{-\alpha r^t}\left[\alpha^2 t^2 r^{2t} - \alpha t(t+1)r^t\right]Y_{00}(\theta\varphi)$$
$$+ C_1 e^{-\alpha r^t}\left[\alpha^2 t^2 r^{2t} - \alpha t(t+1)r^t - 2\right]Y_{10}(\theta\varphi)\Big\}. \tag{3-32}$$

Then

$$\langle T \rangle = -|n|^2 \frac{\hbar^2}{2m}\int_0^\infty e^{-2\alpha r^t}\Big\{(|C_0|^2 + |C_1|^2)$$
$$\cdot\left[\alpha^2 t^2 r^{2t} - \alpha t(t+1)r^t\right] - 2|C_1|^2\Big\}dr. \tag{3-33}$$

Using the change of variable Eq. (3-27), we can express the integrals as

gamma functions defined in Eq. (3-29):

$$\langle T\rangle = -|n|^2\frac{\hbar^2}{2m}\left\{\left(|C_0|^2+|C_1|^2\right)\left[\alpha^2 t\left(\frac{1}{2\alpha}\right)^{\frac{1}{t}+2}\Gamma\left(\frac{1}{t}+2\right)\right.\right.$$

$$\left.\left.-\alpha(t+1)\left(\frac{1}{2\alpha}\right)^{\frac{1}{t}+1}\Gamma\left(\frac{1}{t}+1\right)\right]-\frac{2|C_1|^2}{t}\left(\frac{1}{2\alpha}\right)^{\frac{1}{t}}\Gamma\left(\frac{1}{t}\right)\right\}. \tag{3-34}$$

This expression can be simplified by means of the identity Eq. (3-30) for gamma functions, and by Eqs. (3-9) and (3-31):

$$\langle T\rangle = \frac{\hbar^2}{2m}\cdot(2\alpha)^{\frac{2}{t}}\cdot\frac{\Gamma\left(\frac{1}{t}\right)}{\Gamma\left(\frac{3}{t}\right)}\cdot\left(t+1+8|C_1|^2\right). \tag{3-35}$$

We can begin the calculation of $\langle V\rangle$ with Eq. (3-14) and substitute for g(r) from Eq. (3-24). The radial integral is expressed as the sum of two integrals:

$$\int_0^a n^* e^{-\alpha r^t}\frac{r}{a^2}n e^{-\alpha r^t}r^2dr+\int_a^\infty n^* e^{-\alpha r^t}\frac{a}{r^2}n e^{-\alpha r^t}r^2dr. \tag{3-36}$$

Applying the transformation Eq. (3-27) to the variables in Eq. (3-36), we obtain

$$\langle V\rangle = -\frac{4eq}{\sqrt{3}}\,\mathrm{Re}(C_0C_1^*)|n|^2\cdot\frac{1}{t}$$

$$\cdot\left[\frac{1}{a^2}\left(\frac{1}{2\alpha}\right)^{\frac{4}{t}}\int_0^{2\alpha a^t}e^{-x}x^{\frac{4}{t}-1}dx+a\left(\frac{1}{2\alpha}\right)^{\frac{1}{t}}\int_{2\alpha a^t}^\infty e^{-x}x^{\frac{1}{t}-1}dx\right]. \tag{3-37}$$

In the process of minimizing $\langle H\rangle = \langle T\rangle + \langle V\rangle$ we can take C_0 and C_1 real, as before, without loss of generality. Then we obtain, using the

explicit value of $|n|^2$,

$$\langle H\rangle = \frac{\hbar^2}{8m}(2\alpha)^{\frac{2}{t}}\cdot\frac{\Gamma\left(\frac{1}{t}\right)}{\Gamma\left(\frac{3}{t}\right)}\cdot\left(t+1+8C_1^2\right) - \frac{4eq}{\sqrt{3}}\cdot\frac{C_0C_1}{\Gamma\left(\frac{3}{t}\right)}\cdot$$

$$\cdot\left[\frac{1}{a^2}\left(\frac{1}{2\alpha}\right)^{\frac{1}{t}}\int_0^{2\alpha a^t} e^{-x}\,x^{\frac{4}{t}-1}\,dx + a(2\alpha)^{\frac{2}{t}}\int_{2\alpha a^t}^{\infty} e^{-x}\,x^{\frac{1}{t}-1}\,dx\right]. \tag{3-38}$$

It is convenient for the following calculations to write

$$\langle H\rangle = \mu\left(t+1+8C_1^2\right) - \nu C_1\sqrt{1-C_1^2} \tag{3-39}$$

where μ and ν can be read directly from Eq. (3-38), and $C_0 = \sqrt{1 - C_1^2}$.

We set the partial derivative of $\langle H\rangle$ with respect to C_1 equal to zero and solve for C_1^2 (μ and ν are independent of C_1):

$$C_1^2 = \frac{1}{2} \pm \frac{4\mu}{\sqrt{64\mu^2+\nu^2}}\ . \tag{3-40}$$

For a minimum value of $\langle H\rangle$ we take the lower sign. Then

$$\langle H\rangle_{min} = \mu\left(t+5-\frac{32\mu}{\sqrt{64\mu^2+\nu^2}}\right) - \frac{\nu^2}{2\sqrt{64\mu^2+\nu^2}}$$

$$= \mu(t+5) - \frac{1}{2}\sqrt{64\mu^2+\nu^2}\ . \tag{3-41}$$

$\langle H\rangle_{min}$ is negative provided

$$\frac{1}{2}\sqrt{64\mu^2+\nu^2} > \mu(t+5) \tag{3-42}$$

which can be expressed as

$$\nu > 2\mu\sqrt{(t+1)(t+9)}\ . \tag{3-43}$$

Substituting the values of μ and ν into Eq. (3-43), simplifying, and dividing

through by a, we obtain for the condition that $\langle H \rangle_{min}$ be negative

$$\frac{1}{a^3}\left(\frac{1}{2\alpha}\right)^{\frac{3}{t}} \int_0^{2\alpha a^t} e^{-x} x^{\frac{4}{t}-1} dx + \int_{2\alpha a^t}^{\infty} e^{-x} x^{\frac{1}{t}-1} dx$$

$$> \frac{\sqrt{3}}{16} \cdot \frac{e a_0}{q a} \Gamma\left(\frac{1}{t}\right) \sqrt{(t+1)(t+9)} \quad . \tag{3-44}$$

We solve this inequality by first replacing t^{-1} by k, where k is an integer larger than one. This is justified because we will later consider the solution in the limit of very small t corresponding to very large k. In this limit we consider k to be a very large integer, with no loss of generality. With $t^{-1} = k$, Eq. (3-44) becomes

$$\frac{1}{a^3}\left(\frac{1}{2\alpha}\right)^{3k} \int_0^{2\alpha a^{\frac{1}{k}}} e^{-x} x^{4k-1} dx + \int_{2\alpha a^{\frac{1}{k}}}^{\infty} e^{-x} x^{k-1} dx$$

$$> \frac{\sqrt{3}}{16} \cdot \frac{e a_0}{q a} \Gamma(k) \sqrt{\left(\frac{1}{k}+1\right)\left(\frac{1}{k}+9\right)} \quad . \tag{3-45}$$

The integrals in Eq. (3-45) are now elementary and the left hand side becomes

$$e^{-2\alpha a^{\frac{1}{k}}} \left[\sum_{\ell=0}^{k-2} (2\alpha a^{\frac{1}{k}})^{\ell} (k-1) \cdots (\ell+1) + (4k-1)! \sum_{\ell=4k-1}^{\infty} \frac{(2\alpha a^{\frac{1}{k}})^{\ell-3k}}{\ell!} \right] . \tag{3-46}$$

Now α is a variational parameter whose value we have not yet specified. We take α to approach zero. In this limit the only term in Eq. (3-46) which survives is simply (k - 1)! Then Eq. (3-45) becomes

$$(k-1)! > \frac{\sqrt{3}}{16} \cdot \frac{e a_0}{q a} \Gamma(k) \sqrt{\left(\frac{1}{k}+1\right)\left(\frac{1}{k}+9\right)} \quad . \tag{3-47}$$

Since $\Gamma(k) = (k-1)!$, we can express Eq. (3-47) as

$$D \equiv 2qa > \frac{\sqrt{3}\, e a_0}{8} \sqrt{\left(\frac{1}{k}+1\right)\left(\frac{1}{k}+9\right)} \quad . \tag{3-48}$$

In the limit of very large k, $D_{min} = (3\sqrt{3}/8)ea_o = 1.65 \times 10^{-18}$ esu-cm.

To summarize, it has been shown by a variational calculation that a dipole moment as small as 1.65×10^{-18} esu-cm gives a bound electronic state for the finite dipole. By comparison, the dipole moment of water is 1.85×10^{-18} esu-cm, and the lowest value in the calculations of Wallis et al. is 2.14×10^{-18} esu-cm.

In Section IV we solve the point dipole problem and find the same minimum dipole moments for the corresponding variational wave functions. This result is plausible because in the limit of small Z, i.e., very weak binding, the wave function falls off slowly at large distances and so the dipole appears localized in a very small region. One may conjecture that for any variational wave function, the point dipole solution gives the same D_{min} as for the finite dipole. This would have the practical effect of reducing the amount of calculation required to solve the finite dipole case for a given variational wave function. However, we have not as yet proved this conjecture.

IV. QUANTUM MECHANICAL BOUND STATES OF AN ELECTRON IN A POINT DIPOLE FIELD

A. Separability of Wave Equation

We start with the Schrödinger equation, Eq. (3-1), for the motion of an electron in the field of a finite dipole. The potential energy function is $V = eq(1/r_2 - 1/r_1)$, in the notation of Fig. 2-2. The point dipole is defined by letting R go to zero and q to infinity in such a way that the dipole moment $D \equiv qR$ remains finite. The potential energy becomes $V = -eD\cos\theta/r^2$, (where θ and r are spherical polar coordinates in Fig. 2-1), which is still non-central.

The Schrödinger equation for the point dipole is separable in spherical polar coordinates. This permits the use of spherical harmonics $Y_{\ell m}(\theta\varphi)$ which have convenient and familiar properties. Writing the Laplacian in spherical polar coordinates, we have for the Schrödinger equation

$$\left\{-\frac{\hbar^2}{2m}\left[\frac{1}{r^2}\frac{\partial}{\partial r}\left(r^2\frac{\partial}{\partial r}\right)+\frac{1}{r^2\sin\theta}\frac{\partial}{\partial\theta}\left(\sin\theta\frac{\partial}{\partial\theta}\right)\right.\right.$$
$$\left.\left.+\frac{1}{r^2\sin^2\theta}\frac{\partial^2}{\partial\varphi^2}\right]-\frac{eD\cos\theta}{r^2}-E\right\}\Psi(r\theta\varphi)=0. \tag{4-1}$$

Consider a solution of the form

$$\Psi(r\theta\varphi)=\sum_{\ell=0}^{\infty}f_\ell(r)Y_{\ell m}(\theta\varphi), \tag{4-2}$$

where the $f_\ell(r)$ are radial functions to be determined. (Note that the Hamiltonian does not couple states of different m). Substituting this solution into Eq. (4-1), and multiplying by $-2mr^2/\hbar^2$, we get

$$\left[\frac{\partial}{\partial r}\left(r^2\frac{\partial}{\partial r}\right)+\frac{1}{\sin\theta}\frac{\partial}{\partial\theta}\left(\sin\theta\frac{\partial}{\partial\theta}\right)+\frac{1}{\sin^2\theta}\frac{\partial^2}{\partial\varphi^2}\right.$$
$$\left.+K\cos\theta+k^2r^2\right]\sum_{\ell=0}^{\infty}f_\ell(r)Y_{\ell m}(\theta\varphi)=0, \tag{4-3}$$

where we have introduced the parameters $K\equiv 2meD/\hbar^2$ and $k^2\equiv 2mE/\hbar^2$. (Note that we can also write $K=2D/ea_0$ and $k^2=2E/a_0e^2$.) Using Eq. (3-7) for the spherical harmonics and substituting in Eq. (4-3) results in

$$\sum_{\ell=0}^{\infty}\left[\frac{\partial}{\partial r}\left(r^2\frac{\partial}{\partial r}\right)-\ell(\ell+1)+K\cos\theta+k^2r^2\right]f_\ell(r)Y_{\ell m}(\theta\varphi)=0. \tag{4-4}$$

To get a purely radial equation, we multiply Eq. (4-4) by $Y^*_{\ell' m}(\theta\varphi)$ and integrate over the angular variables. The result, after simplification by means of the orthonormality properties of the spherical harmonics, is

$$\left[\frac{d}{dr}\left(r^2\frac{d}{dr}\right) - \ell(\ell+1) + k^2r^2\right] f_\ell(r)$$

$$+ K\left[\sqrt{\frac{(\ell+m)(\ell-m)}{(2\ell+1)(2\ell-1)}}\; f_{\ell-1}(r) + \sqrt{\frac{(\ell+m+1)(\ell-m+1)}{(2\ell+3)(2\ell+1)}}\; f_{\ell+1}(r)\right] = 0. \tag{4-5}$$

Equation (4-5) represents an infinite set of coupled equations for $\ell = 0, 1, 2, \ldots$; $[f_{-1}(r) \equiv 0]$. The $(\cos\theta)$-dependence of the potential results in $f_{\ell\pm 1}(r)$ being coupled into the equation for $f_\ell(r)$. If the dipole moment is zero, $K = 0$, and Eq. (4-5) reduces to the radial equation for a free particle with angular momentum quantum number ℓ. It is interesting to consider the quantum mechanical problem for the central counterpart of the non-central inverse-square potential. If we set $\cos\theta = 1$, the potential term can be combined with the centrifugal term to produce a coefficient $[K - \ell(\ell+1)]$. The solution of the latter case has been treated in detail in ref. 8.

Another form of solution we consider is

$$\Psi(r\theta\varphi) = f(r)\,G(\theta\varphi), \tag{4-6}$$

where $f(r)$ and $G(\theta\varphi)$ are unspecified functions except for their arguments. With this trial solution, Eq. (4-1) is separable into the following radial and angular equations:

$$\left[\frac{d}{dr}\left(r^2\frac{d}{dr}\right) + k^2r^2 - \gamma\right] f(r) = 0 \tag{4-7}$$

and

$$\left[\frac{1}{\sin\theta}\frac{\partial}{\partial\theta}\left(\sin\theta\frac{\partial}{\partial\theta}\right) + K\cos\theta + \gamma + \frac{1}{\sin^2\theta}\frac{\partial^2}{\partial\varphi^2}\right] G(\theta\varphi) = 0, \tag{4-8}$$

where γ is the separation constant.

We will treat two special cases of Eq. (4-8). First we consider

$$G(\theta\varphi) = \sum_{\ell=0}^{\infty} C_\ell Y_{\ell m}(\theta\varphi). \tag{4-9}$$

This is equivalent to taking a single radial dependence $f_\ell(r) = C_\ell f(r)$ in Eq. (4-2). In fact we may substitute this directly into Eq. (4-5) and use Eq. (4-7) to get

$$[\gamma - \ell(\ell+1)]C_\ell f(r) + K\left[\sqrt{\frac{(\ell+m)(\ell-m)}{(2\ell+1)(2\ell-1)}}\, C_{\ell-1} + \sqrt{\frac{(\ell+m+1)(\ell-m+1)}{(2\ell+3)(2\ell+1)}}\, C_{\ell+1}\right] f(r) = 0. \tag{4-10}$$

Since this equation must be satisfied for all r, we get a three-term recursion relation for the coefficients C_ℓ. This relation is just Eq. (4-10) with the function f(r) removed.

Second, we consider

$$G(\theta\varphi) = g(\theta)\, h(\varphi) \tag{4-11}$$

i. e., $\Psi(r\theta\varphi) = f(r)\, g(\theta)\, h(\varphi)$. The separated Schrödinger equation then is

$$\left[\frac{d}{dr}\left(r^2 \frac{d}{dr}\right) + k^2 r^2 - \gamma\right] f(r) = 0 \tag{4-12}$$

$$\left[\frac{1}{\sin\theta}\frac{d}{d\theta}\left(\sin\theta \frac{d}{d\theta}\right) + K\cos\theta + \gamma - \frac{b^2}{\sin^2\theta}\right] g(\theta) = 0 \tag{4-13}$$

$$\left(\frac{d^2}{d\varphi^2} + \varepsilon^2\right) h(\varphi) = 0\ , \tag{4-14}$$

where γ, b, and ε are separation constants.

The single-valued solutions of Eq. (4-14) are

$$h(\varphi) = \frac{1}{\sqrt{2\pi}}\, e^{i\varepsilon\varphi}\ , \qquad \varepsilon = 0, \pm 1, \pm 2, \ldots\ . \tag{4-15}$$

The solution of the radial equation depends on the value of the separation constant γ. This constant is determined, however, by the solution of the

θ-equation. Equation (4-13) can be transformed by the substitution $x = \cos\theta$ into

$$\frac{d}{dx}\left[(1-x^2)\frac{dg}{dx}\right] + \left(Kx - \frac{b^2}{1-x^2} + \gamma\right)g = 0. \tag{4-16}$$

This equation is of Sturm-Liouville form.[12]

B. Variational Calculations

We give explicit results for a trial function of the form of Eq. (4-2) consisting entirely of S- and P-wave angular momentum eigenfunctions. This concentrates the probability density of the electron in the half-space containing the positive dipole charge. We take

$$\Psi(r\theta\varphi) = C_0 f_0(r) Y_{00}(\theta\varphi) + C_1 f_1(r) Y_{10}(\theta\varphi). \tag{4-17}$$

The radial functions are taken to be normalized by

$$\int_0^\infty |f_0(r)|^2 r^2 dr = \int_0^\infty |f_1(r)|^2 r^2 dr = 1, \tag{4-18}$$

and thus the normalization $\int \Psi^* \Psi \, d\tau = 1$ implies

$$|C_0|^2 + |C_1|^2 = 1. \tag{4-19}$$

We choose the radial functions

$$\begin{aligned} f_0(r) &= K_0 \frac{e^{-\alpha r^t}}{r^p} \\ f_1(r) &= K_1 \frac{e^{-\beta r^t}}{r^q}. \end{aligned} \tag{4-20}$$

In order that these functions be normalizable, we require that $t > 0$, $p < 1/2$, $q < 1/2$, $\alpha > 0$, and $\beta > 0$. The adjustable variational parameters are C_0, C_1, α, β, p, q, and t. The same power t of r was used in the exponentials in

order that the integrations below could be made in terms of tabulated functions. It will be seen later than the minimum value of the dipole moment needed to give a negative value of the energy depends principally on the parameter t.

It is convenient to divide the Hamiltonian in Eq. (4-1) into the following terms:

$$H = -\frac{\hbar^2}{2m}\mathcal{O}(r) + \frac{\ell(\ell+1)\hbar^2}{2mr^2} + V \tag{4-21}$$

where

$$\mathcal{O}(r) \equiv \frac{\partial^2}{\partial r^2} + \frac{2}{r}\frac{\partial}{\partial r} , \tag{4-22}$$

$$V = -\frac{De\cos\theta}{r^2} , \tag{4-23}$$

and the $\ell(\ell+1)$ term is determined by Eq. (3-7). The expectation value of $\mathcal{O}(r)$ is given by

$$\begin{aligned}\langle\mathcal{O}(r)\rangle &= \int \Psi^* \mathcal{O}(r)\Psi\, r^2 dr\, d\Omega \\ &= |C_0|^2\int_0^\infty f_0^* \mathcal{O}(r) f_0\, r^2 dr + |C_1|^2\int_0^\infty f_1^* \mathcal{O}(r) f_1\, r^2 dr.\end{aligned} \tag{4-24}$$

The functional dependence of the first integral on α and p is the same as that of the second integral on β and q, and so we need work out only one of them. From Eqs. (4-22) and (4-20) it follows that

$$\begin{aligned}\int_0^\infty f_0^* \mathcal{O}(r) f_0\, r^2 dr = |K_0|^2\int_0^\infty e^{-2\alpha r^t}\big[&\alpha^2 t^2 r^{2t-2p} \\ &+ \alpha t(2p-t-1)r^{t-2p} + p(p-1)r^{-2p}\big]dr.\end{aligned} \tag{4-25}$$

The right-hand side can be expressed in terms of gamma functions. Using the substitution Eq. (3-27), we obtain

$$\int_0^\infty f_0^* \mathcal{O}(r) f_0 r^2 dr = \frac{|K_0|^2}{t}\left(\frac{1}{2\alpha}\right)^{\frac{1-2p}{t}} \int_0^\infty e^{-x}\left[\frac{\alpha^2 t^2}{(2\alpha)^2} x^{2+\frac{1-2p}{t}} + \frac{t}{2}(2p-t-1)\, x^{1+\frac{1-2p}{t}} + p(p-1)\, x^{\frac{1-2p}{t}}\right] x^{-1} dx. \tag{4-26}$$

From Eqs. (3-29) and (3-30) it follows that Eq. (4-26) can be written

$$\begin{aligned}\int_0^\infty f_0^* \mathcal{O}(r) f_0 r^2 dr &= \frac{|K_0|^2}{t}\left(\frac{1}{2\alpha}\right)^{\frac{1-2p}{t}} \left[\frac{t^2}{4}\left(2+\frac{1-2p}{t}\right)\left(1+\frac{1-2p}{t}\right)\Gamma\left(\frac{1-2p}{t}\right)\right. \\ &\quad \left. + \frac{t}{2}(2p-t-1)\left(\frac{1-2p}{t}\right)\Gamma\left(\frac{1-2p}{t}\right) + p(p-1)\Gamma\left(\frac{1-2p}{t}\right)\right] \\ &= \frac{|K_0|^2}{t}\left(\frac{1}{2\alpha}\right)^{\frac{1-2p}{t}} \Gamma\left(\frac{1-2p}{t}\right)\left[\frac{1}{4}(t+1-2p)(2p-1) + p(p-1)\right].\end{aligned} \tag{4-27}$$

The second integral in Eq. (4-24) is given by this function with α and p replaced by β and q. Since the integral Eq. (3-29) diverges for $\zeta \leq 0$, Eq. (4-27) implies that $p < 1/2$ and $q < 1/2$, a requirement already imposed through the normalization of f_0 and f_1.

Only the P-state wave function contributes to the expectation value of the second operator in Eq. (4-21), so that $\ell(\ell+1) = 2$ and

$$\begin{aligned}\left\langle \frac{\ell(\ell+1)}{r^2} \right\rangle &= 2|C_1|^2 \int_0^\infty |f_1|^2 dr \\ &= 2|C_1|^2 |K_1|^2 \int_0^\infty e^{-2\beta r^t} r^{-2q}\, dr .\end{aligned} \tag{4-28}$$

With the help of the substitution Eq. (3-27), with α replaced by β, we obtain

$$\left\langle \frac{\ell(\ell+1)}{r^2} \right\rangle = \frac{2|C_1|^2 |K_1|^2}{t}\left(\frac{1}{2\beta}\right)^{\frac{1-2q}{t}} \Gamma\left(\frac{1-2q}{t}\right). \tag{4-29}$$

From Eq. (4-17), the expectation value of the third operator in Eq. (4-21) is given by

$$\langle V\rangle = -De\int\left(C_0^* f_0^* Y_{00}^* + C_1^* f_1^* Y_{10}^*\right)\frac{\cos\theta}{r^2}\left(C_0 f_0 Y_{00} + C_1 f_1 Y_{10}\right) r^2 dr d\Omega$$

$$= -De\left(C_0^* C_1 \int f_0^* f_1 dr \int Y_{00}^* Y_{10} \cos\theta\, d\Omega + \text{complex conjugate}\right)$$

$$= -2De\,\mathrm{Re}\left(C_0^* C_1 \int f_0^* f_1 dr \int Y_{00}^* Y_{10} \cos\theta\, d\Omega\right), \tag{4-30}$$

where Re(z) denotes the real part of the argument z. The quantity $\cos\theta$ has non-vanishing matrix elements only between angular momentum states $Y_{\ell m}$ for which the ℓ's differ by ± 1. The integral over angular coordinates in Eq. (4-30) gives

$$\int Y_{00}^* Y_{10} \cos\theta\, d\Omega = \frac{\sqrt{3}}{4\pi}\int_0^{\pi} \cos^2\theta \sin\theta\, d\theta \int_0^{2\pi} d\varphi = \frac{1}{\sqrt{3}}. \tag{4-31}$$

The integral over the radial coordinate is

$$\int f_0^* f_1\, dr = K_0^* K_1 \int_0^{\infty} e^{-(\alpha+\beta)r^t} r^{-p-q}\, dr. \tag{4-32}$$

This has the form of Eq. (4-31), which gives

$$\int f_0^* f_1\, dr = \frac{K_0^* K_1}{t}\left(\frac{1}{\alpha+\beta}\right)^{\frac{1-p-q}{t}} \Gamma\left(\frac{1-p-q}{t}\right). \tag{4-33}$$

The divergence of the integral Eq. (4-32) for $p + q \geq 1$ requires that $p + q < 1$. This condition is satisfied since $p < 1/2$ and $q < 1/2$. From Eqs. (4-30), (4-31), and (4-33) we have

$$\langle V\rangle = -\frac{2De}{\sqrt{3}}\,\mathrm{Re}\left[C_0^* C_1 K_0^* K_1 \frac{1}{t}\left(\frac{1}{\alpha+\beta}\right)^{\frac{1-p-q}{t}} \Gamma\left(\frac{1-p-q}{t}\right)\right]. \tag{4-34}$$

Substituting Eq. (4-27)—with the analogous expression for $\int_0^\infty f_1^* \mathcal{O}(r) f_1 r^2 dr$—, Eqs. (4-24), (4-29), and (4-34) into Eq. (4-21) gives for the expectation value of the energy of the electron

$$\langle H \rangle = -\frac{\hbar^2}{2m}\left\{\frac{|C_0|^2|K_0|^2}{t}\left(\frac{1}{2\alpha}\right)^{\frac{1-2p}{t}}\Gamma\left(\frac{1-2p}{t}\right)\left[\frac{1}{4}(t+1-2p)(2p-1)+p(p-1)\right]\right.$$
$$+\frac{|C_1|^2|K_1|^2}{t}\left(\frac{1}{2\beta}\right)^{\frac{1-2q}{t}}\Gamma\left(\frac{1-2q}{t}\right)\left[\frac{1}{4}(t+1-2q)(2q-1)+q(q-1)\right]\Bigg\}$$
$$+\frac{\hbar^2}{m}\cdot\frac{|C_1|^2|K_1|^2}{t}\left(\frac{1}{2\beta}\right)^{\frac{1-2q}{t}}\Gamma\left(\frac{1-2q}{t}\right)$$
$$-\frac{2De}{\sqrt{3}}\,\mathrm{Re}\left[C_0^* C_1 K_0^* K_1 \frac{1}{t}\left(\frac{1}{\alpha+\beta}\right)^{\frac{1-p-q}{t}}\Gamma\left(\frac{1-p-q}{t}\right)\right]. \tag{4-35}$$

In minimzing $\langle H \rangle$, we make the magnitude of the last term in Eq. (4-35) as large as possible. With respect to the phase of the product $C_0^* C_1 K_0^* C_1$, this is accomplished by making that phase zero. Since the term in question is the only place in $\langle H \rangle$ where phases enter, we can take C_0, C_1, K_0, and K_1 to be real without loss of generality. Making the substitutions $C_0^2 = 1 - C_1^2$ and $Dem/\hbar^2 = D/ea_o$, we write for Eq. (4-35)

$$\langle H \rangle = \frac{\hbar^2}{2mt}\left\{K_0^2\left(\frac{1}{2\alpha}\right)^{\frac{1-2p}{t}}\Gamma\left(\frac{1-2p}{t}\right)\left[\frac{1}{4}(t+1-2p)(1-2p)+p(1-p)\right]\right.$$
$$+C_1^2\left[K_1^2\left(\frac{1}{2\beta}\right)^{\frac{1-2q}{t}}\Gamma\left(\frac{1-2q}{t}\right)\left(\frac{1}{4}(t+1-2q)(1-2q)+q(1-q)\right)\right.$$
$$\left.-K_0^2\left(\frac{1}{2\alpha}\right)^{\frac{1-2p}{t}}\Gamma\left(\frac{1-2p}{t}\right)\left(\frac{1}{4}(t+1-2p)(1-2p)+p(1-p)\right)+2K_1^2\left(\frac{1}{2\beta}\right)^{\frac{1-2q}{t}}\Gamma\left(\frac{1-2q}{t}\right)\right]$$
$$\left.-\frac{4D}{ea_o\sqrt{3}}K_0K_1C_1\sqrt{1-C_1^2}\left(\frac{1}{\alpha+\beta}\right)^{\frac{1-p-q}{t}}\Gamma\left(\frac{1-p-q}{t}\right)\right\}. \tag{4-36}$$

As a function of C_1, $\langle H \rangle$ can be written

$$\langle H \rangle = \frac{\hbar^2}{2mt}\left(A + BC_1^2 - DFC_1\sqrt{1-C_1^2}\right) \tag{4-37}$$

where

$$A = K_0^2\left(\frac{1}{2\alpha}\right)^{\frac{1-2p}{t}}\Gamma\left(\frac{1-2p}{t}\right)\left[\frac{1}{4}(t+1-2p)(1-2p) + p(1-p)\right], \tag{4-38}$$

$$\begin{aligned} B = {} & K_1^2\left(\frac{1}{2\beta}\right)^{\frac{1-2q}{t}}\Gamma\left(\frac{1-2q}{t}\right)\left[\frac{1}{4}(t+1-2q)(1-2q) + q(1-q)\right] \\ & - K_0^2\left(\frac{1}{2\alpha}\right)^{\frac{1-2p}{t}}\Gamma\left(\frac{1-2p}{t}\right)\left[\frac{1}{4}(t+1-2p)(1-2p) + p(1-p)\right] \\ & + 2K_1^2\left(\frac{1}{2\beta}\right)^{\frac{1-2q}{t}}\Gamma\left(\frac{1-2q}{t}\right), \end{aligned} \tag{4-39}$$

$$F = \frac{4K_0K_1}{ea_0\sqrt{3}}\left(\frac{1}{\alpha+\beta}\right)^{\frac{1-p-q}{t}}\Gamma\left(\frac{1-p-q}{t}\right), \tag{4-40}$$

and D and C_1 are the same as before. It follows from Eq. (4-37) that the electron energy $\langle H \rangle$ will be negative and hence there will be a bound state for the electron for values of the dipole moment

$$D > \frac{A + BC_1^2}{FC_1\sqrt{1-C_1^2}} . \tag{4-41}$$

To minimize the dipole moment that will just give a bound state, we set $\partial D/\partial C_1 = 0$ and solve the resulting equation for C_1. Differentiation gives

$$\frac{\partial D}{\partial C_1} = \frac{FC_1\sqrt{1-C_1^2}\cdot 2BC_1 - (A+BC_1^2)F\left[\sqrt{1-C_1^2} - \frac{C_1^2}{\sqrt{1-C_1^2}}\right]}{F^2C_1^2(1-C_1^2)} . \tag{4-42}$$

Setting the numerator equal to zero and multiplying through by $\sqrt{1-C_1^2}/F$ gives

$$2BC_1^2(1-C_1^2) - (A+BC_1^2)(1-2C_1^2) = 0 . \tag{4-43}$$

The terms in C_1^4 drop out and we are left with

$$C_1^2(2A+B) - A = 0. \tag{4-44}$$

A positive value of the dipole moment results from the positive root

$$C_1 = \sqrt{\frac{A}{2A+B}} \quad . \tag{4-45}$$

Substituting this root into Eq. (4-41) gives

$$D > \frac{A + \dfrac{AB}{2A+B}}{F\sqrt{\dfrac{A}{2A+B}}\sqrt{1-\dfrac{A}{2A+B}}} = \frac{2}{F}\sqrt{A(A+B)} \quad . \tag{4-46}$$

With the help of Eqs. (4-38), (4-39), and (4-40), we obtain

$$\begin{aligned} D > {} & \frac{e a_0\sqrt{3}}{2K_0K_1}\cdot\frac{(\alpha+\beta)^{\frac{1-p-q}{t}}}{\Gamma\left(\frac{1-p-q}{t}\right)} \\ & \cdot K_0\left(\frac{1}{2\alpha}\right)^{\frac{1-2p}{2t}}\sqrt{\Gamma\left(\frac{1-2p}{t}\right)}\left[\frac{1}{4}(t+1-2p)(1-2p)+p(1-p)\right]^{\frac{1}{2}} \\ & \cdot K_1\left(\frac{1}{2\beta}\right)^{\frac{1-2q}{2t}}\sqrt{\Gamma\left(\frac{1-2q}{t}\right)}\left[\frac{1}{4}(t+1-2q)(1-2q)+q(1-q)+2\right]^{\frac{1}{2}} \\ = {} & \frac{e a_0\sqrt{3}}{8}(\alpha+\beta)^{\frac{1-p-q}{t}}\left(\frac{1}{2\alpha}\right)^{\frac{1-2p}{2t}}\left(\frac{1}{2\beta}\right)^{\frac{1-2q}{2t}} \\ & \cdot\frac{\sqrt{\Gamma\left(\frac{1-2p}{t}\right)\Gamma\left(\frac{1-2q}{t}\right)}}{\Gamma\left(\frac{1-p-q}{t}\right)} \\ & \cdot\left\{\left[(t+1-2p)(1-2p)+4p(1-p)\right]\left[(t+1-2q)(1-2q)+4q(1-q)+8\right]\right\}^{\frac{1}{2}}. \end{aligned} \tag{4-47}$$

We recall that in the definition, Eq. (4-20), we require that α, β, and t be positive; p and q are each less than one-half. For p = q = 0, $\alpha = \beta$ and t = 1, and Eq. (4-47) simplifies considerably. In this case the trial function

is identical with that used in ref. 6, which gave the minimum value of the dipole moment

$$D_{min} = \frac{ea_0\sqrt{3}}{8}\sqrt{(2)(2+8)} = \frac{ea_0\sqrt{15}}{4} = 2.46 \times 10^{-18} \text{ esu-cm.} \tag{4-48}$$

For $p = q = 0$, $\alpha = \beta$, and $t \neq 1$, Eq. (4-47) gives

$$D > \frac{ea_0\sqrt{3}}{8}\sqrt{(t+1)(t+9)} \ . \tag{4-49}$$

The smallest value that this quantity can have for $t > 0$ approaches the limit (as $t \to 0$),

$$D_{min} = \frac{ea_0\sqrt{27}}{8} = 1.65 \times 10^{-18} \text{ esu-cm} \ . \tag{4-50}$$

This value is smaller than the smallest value 2.14×10^{-18} esu-cm in the numerical calculations of Wallis et al.[7] The results expressed in Eqs. (4-49) and (4-50) are the same as those obtained in Section III for the finite dipole in the limit of very weak binding [see Eq. (3-48) and the subsequent remarks]. Since the actual ground-state energy with the dipole moment of Eq. (4-50) will not be greater than the value zero obtained with the trial function, this result establishes rigorously the existence of bound states for a point dipole with D as small as 1.65×10^{-18} esu-cm. No additional improvement was found for other choices of p and q and for $\alpha \neq \beta$.

In summary, the original trial function, as defined by Eqs. (4-17) and (4-20), shows rigorously that a bound state exists for an electron in the field of a point dipole with a dipole moment as small as 1.65×10^{-18} esu-cm. The above detailed calculations show that this minimum value of the dipole moment results when the following simplifying assumptions are made: C_0 and C_1 are real, $p = q = 0$, and $\alpha = \beta$. The trial function then becomes simply

$$\Psi(r\theta\varphi) = e^{-\alpha r^t}\left[C_0K_0Y_{00}(\theta\varphi) + C_1K_1Y_{10}(\theta\varphi)\right] , \tag{4-51}$$

and the requirement given by Eq. (4-49) assures binding. It is seen that the smallest value $D_{min} = 1.65 \times 10^{-18}$ esu-cm is obtained by letting $t \to 0$. The wave function is then spread over large distances in the half-space containing the dipole's positive charge.

V. UNCERTAINTY PRINCIPLE AND BOUND STATES OF AN ELECTRON IN A DIPOLE FIELD

The following non-rigorous argument, based on the uncertainty principle and the use of qualitative estimates, suggests that there is a minimum value of the dipole moment needed to bind a charged particle quantum mechanically. Consider an electron moving in the field of an attractive central force that varies as an inverse power of the radial coordinate. The energy of the electron is given classically by

$$E = \frac{p^2}{2m} - \frac{\beta}{r^n} \tag{5-1}$$

where p and m are the electron momentum and mass, and β and n are positive constants. A necessary and sufficient condition for binding of the electron is that E be negative, i.e., that

$$2m\beta > p^2 r^n . \tag{5-2}$$

If the maximum values p_o and r_o of the classical momentum and radial coordinate are substituted into Eq. (5-2), then a sufficient condition for binding is

$$2m\beta > p_o^2 r_o^n . \tag{5-3}$$

We assume that a very weakly bound particle occupies a volume in phase space equal to

$$\left(\frac{4\pi}{3}\right)^2 p_o^3 r_o^3 = (2\pi\hbar)^3 , \tag{5-4}$$

corresponding to the existence of a single bound state. We combine Eqs. (5-4) and (5-3) to obtain a semi-classical condition for binding, namely

$$\lambda \equiv \frac{2m\beta}{\hbar^2} > 4\pi^2\left(\frac{3}{4\pi}\right)^{\frac{4}{3}} r_0^{n-2} = 5.8\, r_0^{n-2}. \tag{5-5}$$

We next consider the possibility of having a bound state for an arbitrarily small value of β or λ. For the Coulomb potential, $n = 1$, the condition Eq. (5-5) is

$$\lambda > \frac{5.8}{r_0}. \tag{5-6}$$

For any value of λ this condition can always be fulfilled by taking r_0 sufficiently large. That is, for an arbitrarily weak Coulomb interaction a bound state always exists (as is well known), although the volume occupied by the electron becomes very large when the binding is very weak. This result applies to any other n less than 2. For $n = 3$, the condition Eq. (5-5) gives

$$\lambda > 5.8\, r_0, \tag{5-7}$$

and the existence of a bound state is assured for all values of λ by choosing r_0 sufficiently small. Thus, weakly bound states exist in which the electron stays close to the force center. This result applies to any other value of n greater than 2.

The case $n = 2$ is special. The condition Eq. (5-5) gives

$$\lambda > 5.8 \tag{5-8}$$

and one can say only that bound states do exist when λ is greater than this number.

The last finding, based on the above heuristic arguments, may be compared to the rigorous result that bound states exist for all values of λ with $n \neq 2$, and that a necessary and sufficient condition for binding when $n = 2$ is that $\lambda > 1/4$.[13] The analysis given above indicates that these results can be interpreted as a manifestation of the physical meaning of the uncertainty

principle. To localize an electron in a bound state requires giving it a variety of momentum components. If the potential is long-range ($n < 2$), classical particles with high momenta will always be turned back towards the center of force. Bound states will always exist (even when the force constant β is small) and r_o will be large. If the potential is short-range ($n > 2$), classical particles with high momenta will simply be held in close to the force center and r_o will be small. The potential with $n = 2$ appears neither to be steep enough nor to have a range long enough to assure binding unless the strength β is above a certain value.

The coefficient 5.8 in Eq. (5-5) is larger than the value 1/4 obtained in the quantum mechanical analysis with $n = 2$. In view of the replacement of p and r in Eq. (5-2) by their maximum values, this difference is not surprising. A more realistic coefficient appears if, instead of the above replacment, we assume that p_o may be estimated from the uncertainty principle as follows:

$$\left(\frac{4\pi}{3}\right)^2 p_o^3 r_o^3 \approx \hbar^3 . \tag{5-9}$$

Eq. (5-3) then gives as a sufficient condition for binding that

$$\lambda \equiv \frac{2m\beta}{\hbar^2} > \left(\frac{3}{4\pi}\right)^{\frac{4}{3}} r_o^{n-2} = 0.15\, r_o^{n-2} , \tag{5-10}$$

which is close to the known minimum value $\lambda = 0.25$ for $n = 2$.

If the above arguments for the central potential $V = -\beta/r^2$ are applied to the point dipole for which $V = -De\cos\theta/r^2$, then $\lambda > 1/4$ gives, with $\cos\theta \approx 1$, $D > 0.2 \times 10^{-18}$ esu-cm. This value of the dipole moment is an order of magnitude less than the smallest value for which the existence of bound states was demonstrated with the use of trial functions in Section IV.

VI. SUMMARY

The analysis of Section II showed that bound electronic orbits occur classically for arbitrarily small values of the dipole moment.

The quantum mechanical expectation value of the Hamiltonian for the finite dipole was calculated using variational wave functions. The angular part of these wave functions consisted of an S- and P-wave. Two radial dependences were used: the first was hydrogenic in form, and the second approached the hydrogenic form for certain values of a variational parameter. The energy was minimized and set equal to zero. For the first radial dependence it was found that for a dipole moment $D \geq (\sqrt{15}/4)ea_o = 2.14 \times 10^{-18}$ esu-cm, there is a bound state. For the second radial dependence, a bound state was shown to exist for $D \geq (3\sqrt{3}/8)ea_o = 1.65 \times 10^{-18}$ esu-cm. This is less than the smallest value for which numerical integration of the Schrödinger equation has been performed.

The Schrödinger equation for the point dipole is separable in spherical polar coordinates. Various assumed forms of solution lead to infinite sets of coupled ordinary differential equations, three-term recursion relations, or three ordinary differential equations coupled through separation constants. The last formal solution appears to offer a promising point of departure for a detailed solution and will be the subject of another investigation.

A variational calculation similar to that performed with the finite dipole was carried out for the point dipole. The S- and P-state angular momentum eigenfunctions were used with radial functions that approached the hydrogenic form for certain values of the variational parameters. Results similar to those for the finite dipole were obtained, and it was shown that an electronic bound state exists in the field of a point dipole with a dipole moment as small as $D = (3\sqrt{3}/8)ea_o = 1.65 \times 10^{-18}$ esu-cm.

Semi-classical considerations based on the uncertainty principle indicate that a bound state exists for a central force of any strength varying

as r^{-n} $(n > 0)$ except in the case of the inverse square potential, which has the same radial dependence as that of the point dipole. In this case the analysis indicates that the dipole strength may have to be larger than a certain value in order to bind an electron. The numerical value of this minimum dipole moment is estimated to be $D = 0.2 \times 10^{-18}$ esu-cm. Although this result is by no means rigorous, the use of the uncertainty principle appears to help account in a physical way for the unusual nature of the inverse square potential.

The numerical results of Wallis, Herman, and Milnes[7] are shown together with those obtained here in Fig. 6-1. The solid curve gives the ground-state binding energy as a function of dipole moment from ref. 7. These calculations extend down to the value $D = 2.136 \times 10^{-18}$ esu-cm shown as the lowest calculated D. The dipole moments of a number of molecules are indicated for reference. The lowest value $D = 1.65 \times 10^{-18}$ esu-cm obtained with trial functions and the estimate of the minimum moment based on the uncertainty principle are also shown.

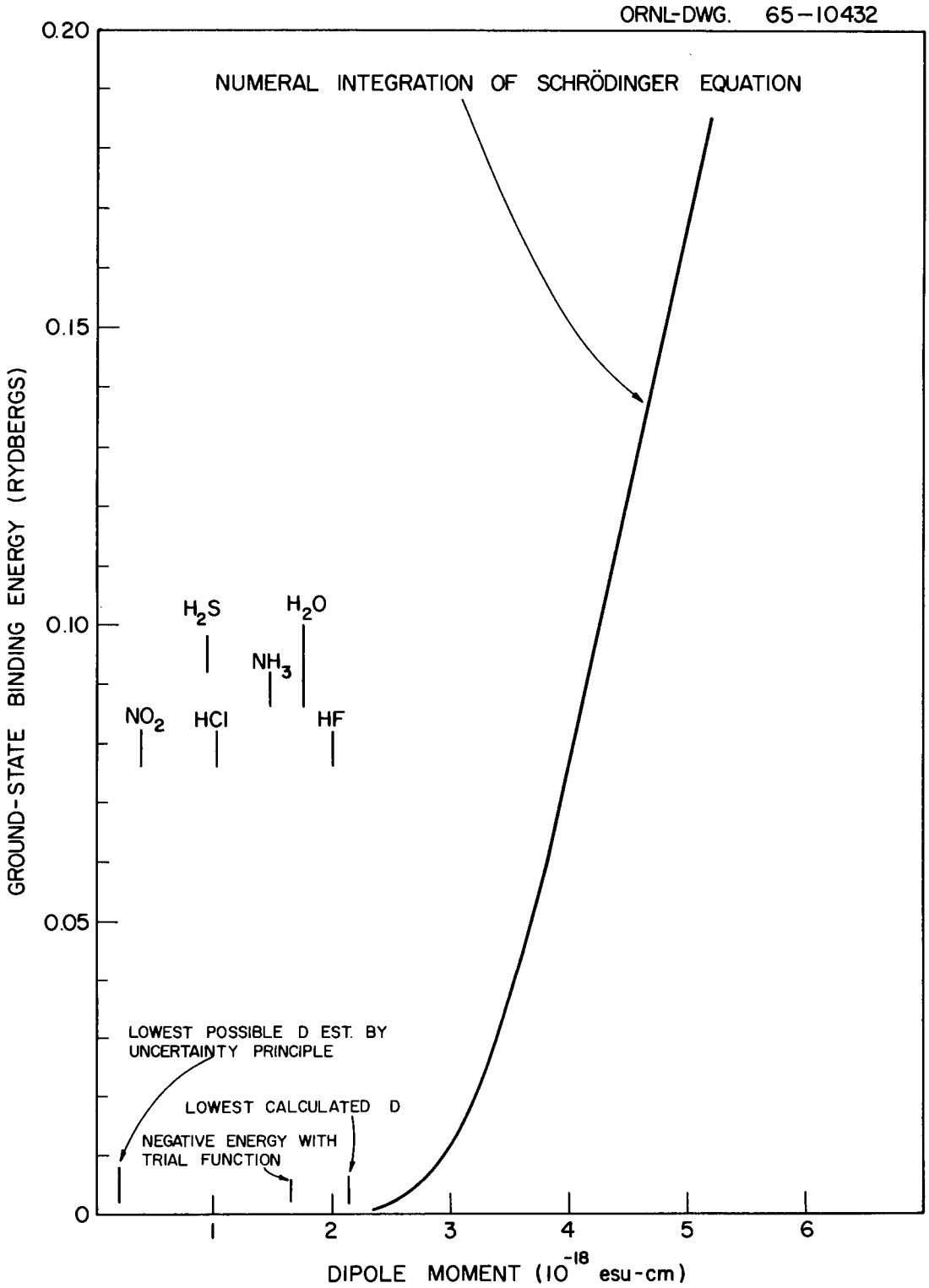

Fig. 6-1. Summary of Numerical Results for Ground-State Binding Energy of an Electron in the Field of a Permanent Electric Dipole.

REFERENCES

1. By the term "finite dipole" we mean a stationary, permanent electric dipole of non-zero spatial extent. The term "point dipole" refers to the limiting case of a stationary, permanent electric dipole whose spatial extent approaches zero in such a way that the product of its extent and charge is not zero.

2. Cf., e.g., D. R. Bates (ed.), Atomic and Molecular Processes, Academic Press, New York, 1962.

3. G. S. Hurst, J. A. Stockdale, and L. B. O'Kelly, J. Chem. Phys. 38, 2572 (1963).

4. Saul Altshuler, Phys. Rev. 107, 114 (1957).

5. M. H. Mittleman and R. E. von Holdt, Phys. Rev. 140, A726 (1965).

6. J. E. Turner, Phys. Rev. (to be published).

7. R. F. Wallis, R. Herman, and H. W. Milnes, J. Mol. Spectry. 4, 51 (1960).

8. K. M. Case, Phys. Rev. 80, 797 (1950).

9. M. Born, The Mechanics of the Atom, p. 243, F. Ungar Publishing Co., New York, 1960.

10. H. Goldstein, Classical Mechanics, Chap. 9, Addison-Wesley Publishing Co., Inc., Reading, 1950.

11. G. S. Handler, J. Chem. Phys. 23, 1977 (1955).

12. P. M. Morse and H. Feshbach, Methods of Theoretical Physics, p. 719, McGraw-Hill, New York, 1953.

13. See, e.g., L. D. Landau and E. M. Lifshitz, Quantum Mechanics, Non-Relativistic Theory, p. 121, Addison-Wesley Publishing Co., Inc., Reading, 1958.

ORNL-3895
UC-34 — Physics
TID-4500 (46th ed.)

INTERNAL DISTRIBUTION

1. Biology Library
2-4. Central Research Library
5. Reactor Division Library
6-7. ORNL — Y-12 Technical Library Document Reference Section
8-57. Laboratory Records Department
58. Laboratory Records, ORNL R.C.
59-83. K. Fox
84. G. S. Hurst
85. W. H. Jordan
86. C. E. Larson
87. H. G. MacPherson
88. K. Z. Morgan
89. D. R. Nelson
90. W. A. Sibley
91. M. J. Skinner
92-116. J. E. Turner
117. A. M. Weinberg
118. J. C. Frye (consultant)
119. J. B. Hursh (consultant)
120. J. L. Magee (consultant)
121. E. P. Odum (consultant)
122. H. O. Wyckoff (consultant)

EXTERNAL DISTRIBUTION

123. N. F. Barr, Division of Biology and Medicine, USAEC, Washington
124. V. B. Bhanot, Physics Department, Panjab University, Chandigarh-3, India
125. W. M. Bugg, University of Tennessee, Knoxville
126. K. M. Case, University of Michigan, Ann Arbor
127. R. W. Childers, University of Tennessee, Knoxville
128. L. G. Christophorou, University of Tennessee, Knoxville
129. B. C. Clark, General Motors Research Labs, Warren, Michigan
130. G. T. Condo, Physics Department, University of Tennessee, Knoxville
131. W. E. Deeds, University of Tennessee, Knoxville
132. O. C. Eldridge, University of Tennessee, Knoxville
133. Guy Forman, Department of Physics, University of South Florida, Tampa
134. N. M. Gailer, University of Tennessee, Knoxville
135. W. R. Garrett, University of Alabama Research Institute, Huntsville, Alabama
136. G. L. Goodman, Argonne National Laboratory, Argonne, Illinois
137. W. Graben, Department of Physics, Clemson University, Clemson, South Carolina
138. E. G. Harris, University of Tennessee, Knoxville
139. R. Herman, General Motors Research Labs, Warren, Michigan
140. W. G. Holladay, Department of Physics and Astronomy, Vanderbilt University, Nashville
141. H. C. Jacobson, University of Tennessee, Knoxville
142. L. D. Louck, Los Alamos Scientific Laboratory, Los Alamos
143. M. A. Melvin, Department of Physics, Florida State University, Tallahassee
144. M. H. Mittleman, Lawrence Radiation Laboratory, University of California, Livermore
145. A. H. Nielsen, Department of Physics, University of Tennessee, Knoxville

146. R. D. Present, Department of Physics, University of Tennessee, Knoxville
147. I. Prigogine, Université Librede Bruxelles, Bruxelles, Belgique
148. R. Roskies, Department of Physics, Yale University, New Haven, Connecticut
149. R. Rothery, General Motors Research Labs, Warren, Michigan
150. James Thomas, Instructor of Public Health, Yale University
151. R. F. Wallis, U.S. Naval Research Laboratory, Washington, D.C.
152. R. W. Wood, Division of Biology and Medicine, USAEC, Washington
153. Research and Development Division, AEC, ORO

154-523. Given distribution as shown in TID-4500 (46th ed.) under Physics category (75 copies – CFSTI)