OAK RIDGE NATIONAL LABORATORY LIBRARIES

3 4456 0548358 0

CENTRAL RESEARCH LIBRARY
DOCUMENT COLLECTION

O ...AL LABORATORY
operated by
UNION CARBIDE CORPORATION
for the
U.S. ATOMIC ENERGY COMMISSION

ORNL-TM-1388

COPY NO. - 39

DATE - December 8, 1965

HFIR CLADDING-FAILURE DETECTOR

J.T. DeLorenzo

1. ABSTRACT

The HFIR Cladding-Failure Detector monitors a sample stream of primary coolant water from the exit of the reactor to detect the release of fission-product activity from small defects, such as blisters, in the full cladding. The operation of the system is briefly described and a procedure for determining the settings for the pulse amplifier, pulse-height discriminator, and high-voltage supply is given.

CENTRAL RESEARCH LIBRARY
DOCUMENT COLLECTION
LIBRARY LOAN
DO NOT TRANSFER TO ANO

NOTICE

This document contains information of a preliminary nature and was prepared primarily for internal use at the Oak Ridge National Laboratory. It is subject to revision or correction and therefore does not represent a final report. The information is not to be abstracted, reprinted or otherwise given public dissemination without the approval of the ORNL patent branch, Legal and Information Control Department.

LEGAL NOTICE

This report was prepared as an account of Government sponsored work. Neither the United States, nor the Commission, nor any person acting on behalf of the Commission:

A. Makes any warranty or representation, expressed or implied, with respect to the accuracy, completeness, or usefulness of the information contained in this report, or that the use of any information, apparatus, method, or process disclosed in this report may not infringe privately owned rights; or

B. Assumes any liabilities with respect to the use of, or for damages resulting from the use of any information, apparatus, method, or process disclosed in this report.

As used in the above, "person acting on behalf of the Commission" includes any employee or contractor of the Commission, or employee of such contractor, to the extent that such employee or contractor of the Commission, or employee of such contractor prepares, disseminates, or provides access to, any information pursuant to his employment or contract with the Commission, or his employment with such contractor.

2. INTRODUCTION

The High-Flux Isotope reactor is cooled by water which is pumped from the bottom of the reactor, flows through heat exchangers, and returns to the top of the reactor. This is called the primary coolant loop. Since serious damage of the fuel element in the reactor, such as a large failure of the cladding or blockage of coolant flow and partial meltdown of the core, would probably release large amounts of radioactivity to the coolant stream, a Faulty-Fuel-Element Detector monitors the exit stream from the reactor for gross amounts of radioactivity. This detection system, a part of the reactor safety system, will shut down the reactor if appropriate signals are received by the safety system.

Small defects of the fuel cladding, such as blisters, could also release small amounts of radioactivity to the cooling water. The Cladding-Failure Detector (Fig. 1) is a sensitive fission-product detection system which continuously monitors the primary coolant stream for evidence of small cladding failures.

This report briefly describes the operation of the Cladding-Failure Detector and gives a procedure for determining the proper operational settings for the pulse amplifier, pulse-height discriminator, and the high-voltage supply

3. OPERATION OF CLADDING FAILURE DETECTOR

A sample stream is withdrawn from the primary coolant loop just beyond the core exit.[1] The sample passes through valve FSV-200 to reduce the stream pressure from 1000 to 100 psi (Fig. 2). The flow rate through the Cladding-Failure Detector is regulated at about 2000 ml/min by flow control valve FCV-200, flow element FE-200, and pneumatic recorder controller FRC-200. The stream is held up by HV-274 before it enters the neutron detector RE-200.

The total delay from the core exit to the neutron detector is 22 sec, which allows for decay of ^{17}N, an emitter of 0.9-Mev neutrons. The neutron detector is a Reuter-Stokes RSN42A BF_3 chamber surrounded by a high-density polyethylene moderator. Since most of the ^{17}N has decayed, the delayed neutron activity of ^{137}I is responsible for background activity detected by the BF_3 detector. Normal surface contamination in the core will release ^{137}I plus a small amount of ^{87}Br. However, a small breach of the fuel cladding would promptly release gaseous fission products and cause a significant increase in ^{137}I activity in the sample stream.[1]

---

[1] High Flux Isotope Reactor Staff, Operating Manual for the High Flux Isotope Reactor, Description of the Facility, ORNL-TM-1138 (June 1965) p 3-104.

OAK RIDGE NATIONAL LABORATORY LIBRARIES

3 4456 0548358 0

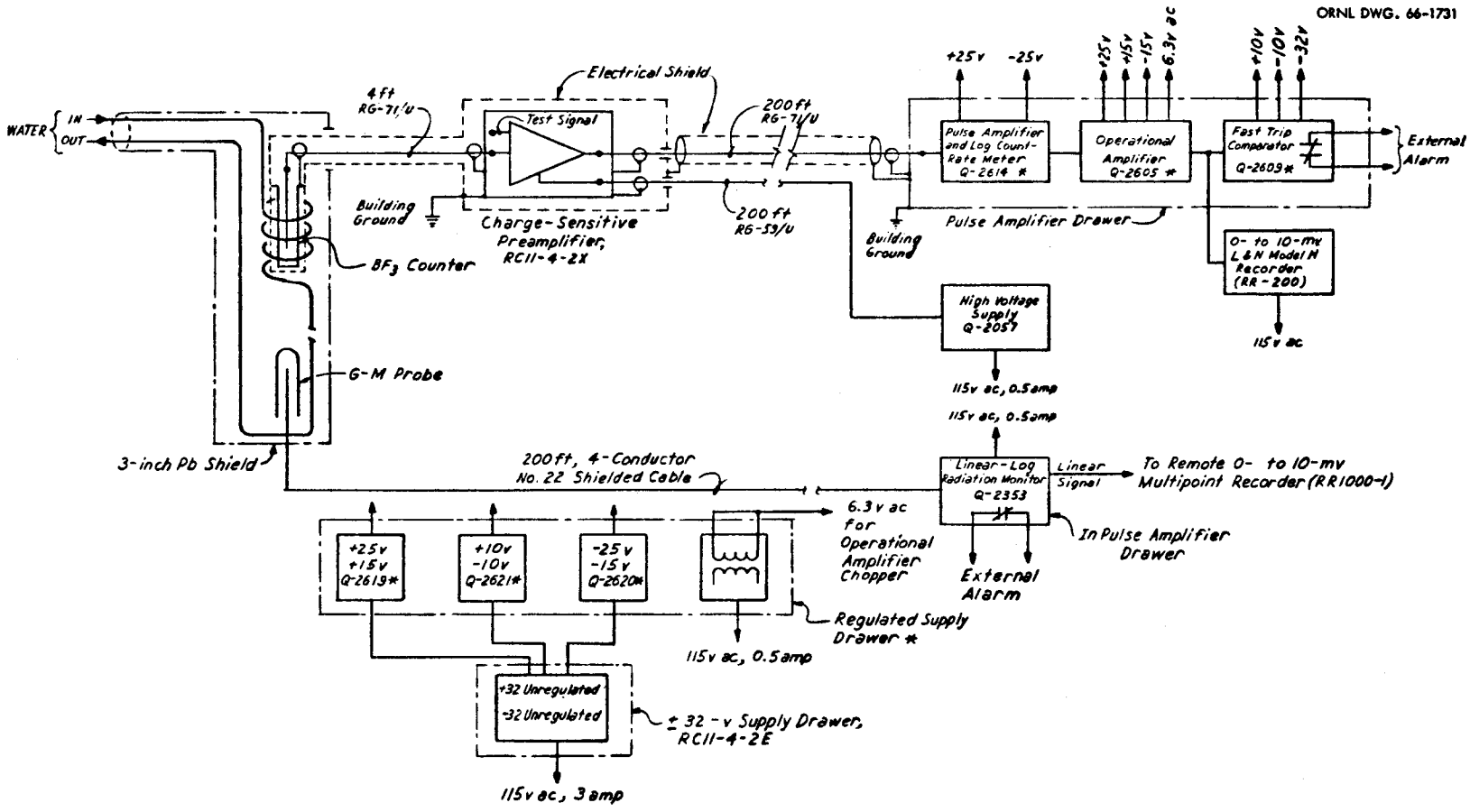

Fig. 1. Diagram of Electronic Instrumentation for the HFIR Cladding-Failure Detector. Items marked with an asterisk are standard reactor control components.

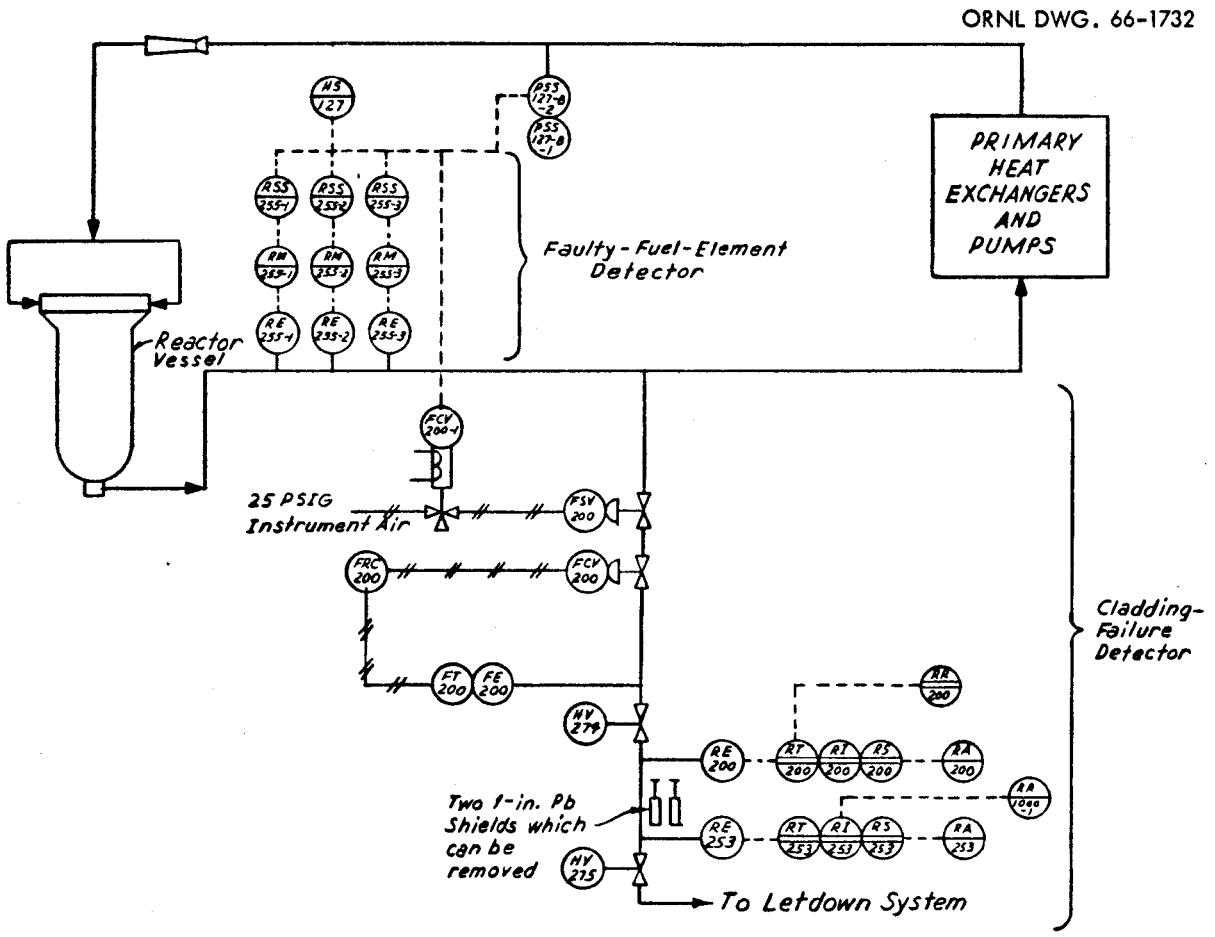

Fig. 2. Flow Sheet of Cladding-Failure Detector and Faulty-Fuel-Element Detector.

After the sample stream has passed the neutron detector, it is held up again for about 20 sec before it flows past a Geiger-Mueller tube which indicates the "gross" gamma activity in the stream. The total delay of 42 sec is sufficient to allow the gamma radioactivity background from ^{16}N to decay to a small quantity before the stream passes the G-M tube.

Flow to the Cladding-Failure Detector will be stopped automatically when the solenoid valve FCV-200-1 closes valve FSV-200. This will occur when the radioactivity in the primary loop measured by the Faulty-Fuel-Element Detector exceeds safety limits or when pressure switch PSS-127-B-1 is actuated by a low-pressure condition.

Valve FSV-200 can also be controlled manually by switch HS-127.

4. DETERMINATION OF SETTINGS FOR PULSE AMPLIFIER, PULSE-HEIGHT DISCRIMINATOR, AND HIGH-VOLTAGE SUPPLY

4.1 Equipment

The following test equipment is required:

1. A scaler with 0- to 10-v input sensitivity (positive pulse) and 1-μsec resolution,

2. A Tektronix 541 oscilloscope with a preamplifier and having 0.01-μsec rise time and 50-mv/cm deflection sensitivity,

3. A 10-millicurie Ra-Be neutron source.

4.2 Procedure

1. Remove high voltage from the BF_3 detector by turning the high-voltage polarity switch to the <u>off</u> position.

2. Connect the scaler to the Pulse Amplifier Module (Q-2614) with RG-62/U cable. Any cable length greater than 6 ft should be terminated at the scaler input with 100 ohms.

3. Turn the gain control switch on the pulse amplifier to X0.7. Adjust the pulse-height discriminator (PHD) of the pulse amplifier module until an average count rate of about 1 count/sec is observed on the scaler. A typical setting is 0.75 (10.00 represents maximum reading). Plus or minus 10% deviations are normal.

4. Apply high voltage to the BF_3 detector by turning the high-voltage polarity switch to the <u>positive</u> position, and expose the BF_3 detector to the neutron source. It may be necessary to remove the top part of the lead shield to obtain a sufficiently high neutron count rate (150-300 counts/sec).

With the pulse amplifier gain at X0.5 and the PHD setting as obtained in step 3, measure the neutron count rate vs voltage, starting at about 1200 v and increasing the voltage in 100-v increments to about 1800 v. Plot the data. A typical plot of data taken at the X0.5 gain and 0.75 PHD settings is shown in Fig. 3.

5. From the plot of data taken in step 4, determine the operating voltage, which should be near the center of the plateau region at about 1500 v. At this operating voltage, observe the pulses at the output connector of the pulse amplifier. Normal operation will reveal little overloading of the amplifier. Moderate overloading will be made apparent by pulses having flat tops. Excessive overloading will be made apparent by the pulses having flat tops followed by a large undershoot on the trailing edge.

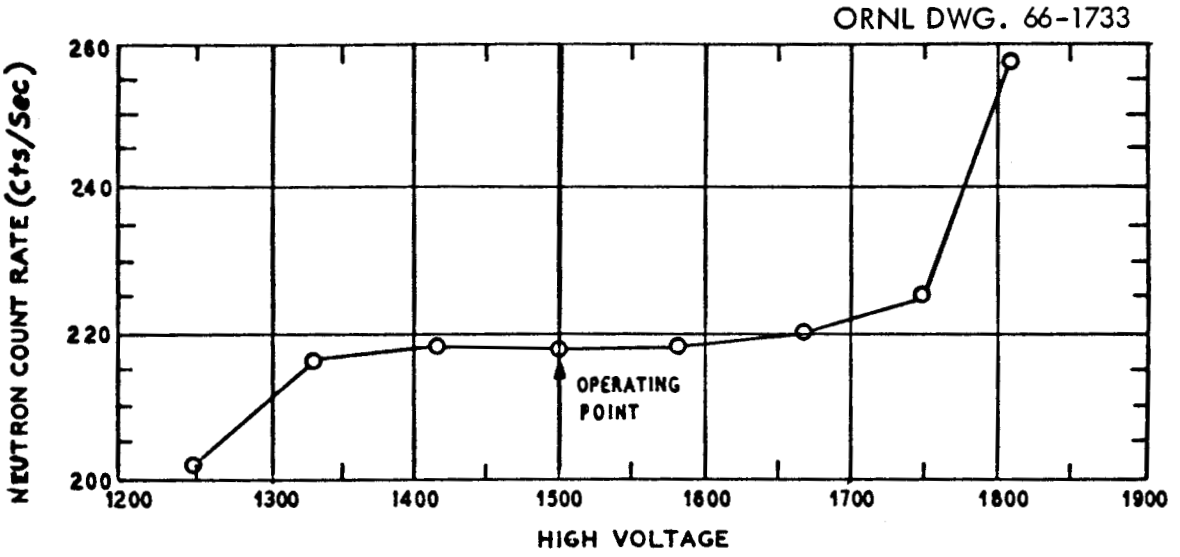

Fig. 3. Voltage Plateau of RSN42A BF_3 Detector. The pulse-height-discriminator setting was 0.75 and the pulse-amplifier-gain setting was X0.5

DISTRIBUTION

1. J.L. Anderson
2. D.S. Asquith
3. C.J. Borkowski
4. W.D. Brown
5. C.T. Carney
6-10. O.C. Cole
11. C.C. Courtney
12-16. J.T. DeLorenzo
17. S.J. Ditto
18. E.P. Epler
19. E.N. Fray
20. C.S. Harrill
21. C.F. Holloway
22. W.H. Jordan
23. W.E. Lingar
24. F.W. Manning
25-27. R.V. McCord
28. L.C. Oakes
29. H.G. O'Brien
30. W. Ragan
31. D.P. Roux
32. P. Rubel
33. J.B. Ruble
34. G.S. Sadowski
35. J.N. Smith
36. K.W. West
37. H.N. Wilson
38-39. Central Research Library
40. Document Reference Section
41-45. Laboratory Records Department
46. Laboratory Records, ORNL R.C.
47. ORNL Patent Office
48-62. Division of Technical Information Extension
63. Research and Development Division, ORO