This digital document was created using the best available physical copy. The blueprint entitled "Cell 4 Sealing Membrane Assemby" (D-45943) was omitted from this digital copy due to the size of the original.

The physical copy of this report is available at the Oak Ridge National Laboratory Research Library. 06/09

DOCUMENT COLLECTION

OAK RIDGE NATIONAL LABORATORY
operated by
UNION CARBIDE CORPORATION
for the
U.S. ATOMIC ENERGY COMMISSION

OAK RIDGE NATIONAL LABORATORY LIBRARIES
3 4456 0549050 9

ORNL-TM-1315

COPY NO. - 1

DATE - November 9, 1965

HAZARD EVALUATION FOR PROCESSING TRANSURANIUM ELEMENTS IN CELL 4 OF BUILDING 4507

F. L. Peishel, Design
V. C. A. Vaughen, Process
J. P. Nichols, Nuclear

ABSTRACT

A facility for the testing of transuranium chemical flowsheets and the production of gram quantities of Cm-242 is being installed in Cell 4 of Building 4507. The equipment consists of solvent extraction contactors plus all of the necessary supporting items required for these operations.

This report is issued for preliminary review by the Hot Cells and Sources Committee. (originally CF-63-7-50)

CENTRAL RESEARCH LIBRARY
DOCUMENT COLLECTION
LIBRARY LOAN COPY
DO NOT TRANSFER TO ANOTHER PERSON
If you wish someone else to see this document, send in name with document and the library will arrange a loan.

NOTICE This document contains information of a preliminary nature and was prepared primarily for internal use at the Oak Ridge National Laboratory. It is subject to revision or correction and therefore does not represent a final report.

HAZARD EVALUATION FOR PROCESSING TRANSURANIUM ELEMENTS IN CELL 4 OF BUILDING 4507

1.0 SUMMARY

A facility for the testing of transuranium chemical flowsheets and the production of gram quantities of Cm-242 is being installed in Cell 4 of Building 4507. The equipment consists of solvent extraction contactors plus all of the necessary supporting items required for these operations.

The cell is designed with appropriate seals to contain the high activity alpha hazardous materials as well as shield against neutron and gamma activity.

Entry and egress of samples and equipment will be made through alpha tight boxes shielded where required. Cell equipment will be maintained remotely or by removal into the alpha tight boxes for further disposition.

Radioactive liquid wastes are chemically neutralized before discharge from the cell. Process water is monitored prior to leaving the cell. Radioactive off gas is scrubbed and cell ventilation air is filtered before discharge into their respective plant handling systems.

Fire protection consists of a heat sensing element in the cell and a manually operated sprinkler head actuated by operating personnel or Fire Department personnel responding to the heat sensing element.

2.0 INTRODUCTION

The TRU Processing Plant chemical flowsheets that have been developed during the past few years have been tested at radiation levels allowable in the laboratory. The installation of equipment in Cell 4 of Building 4507 will meet the need to test these flowsheets at or near radiation levels to be encountered in TRU. In addition to this testing, the production commitment assumed by ORNL for NASA heat sources requiring gram quantities of curium-242 and -244 will be carried out in this cell in conjunction with Cell 3.

A diagram showing feed sources, schedules, and processing sequences for all material to be processed in the facility is shown in Fig. 1.

OAK RIDGE NATIONAL LABORATORY LIBRARIES

3 4456 0549050 9

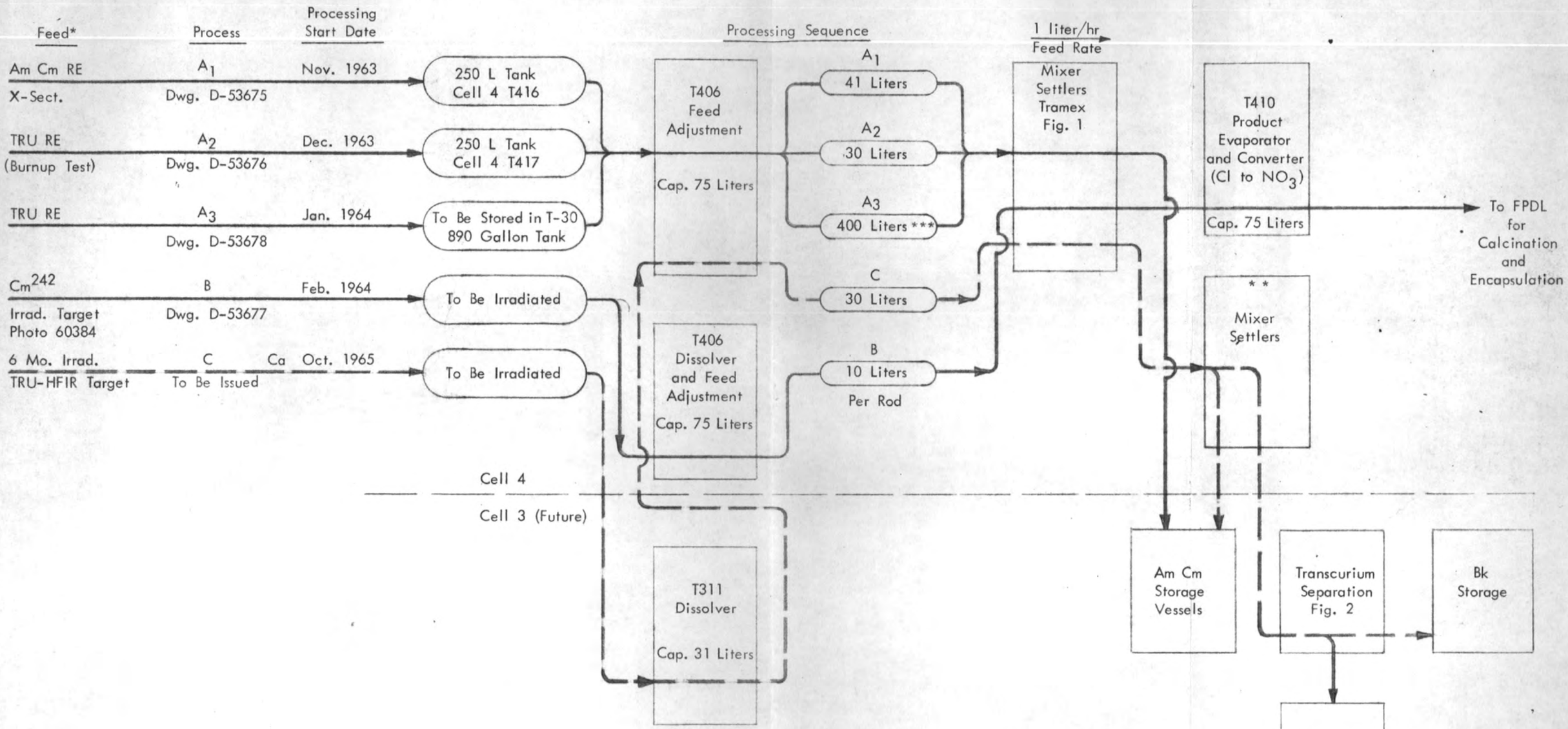

* See Table 1 for Detailed Description of Feed.

** Additional Cycle After Tramex for Am Cm Separation from Transcurium Elements

*** Process Only What is Needed for Commitments

Fig. 1. SCHEMATIC PROCESSING SCHEDULE

The start of cold operations is scheduled for the beginning of August 1963. Tracer level operation utilizing Am, Cm, rare earth solutions stored in the two tanks beneath the lead floor of Cell 4 are tentatively scheduled for November 1963. Production of ten grams of curium-244, followed by one 4-gram and one 8-gram batch of curium-242 should start in January 1964. The testing of flowsheets will be interspersed in these production commitments until 1965, at which time the cell will be used for routine production of curium-242.

The basic chemical flowsheets for accomplishing the aforementioned programs is the Tramex Flowsheet illustrated in Fig. 2 and the Phosphonate Extraction Flowsheet illustrated in Fig. 3. The schematic equipment flowsheet for the processes to be run in Cell 4 is illustrated in Fig. 4. The engineering flowsheets, Drawing Nos. E-45802, E-45804, and E-45805, are included in the attachments to this report.

3.0 PROCESS CHEMISTRY

The Tramex Flowsheet shown in Fig. 2 is used for the separation of actinides and lanthanides and decontamination from fission products. The separation of actinides is shown in Fig. 3 phosphonate extraction. This flowsheet splits the actinides into two groups, the Am-Cm fraction and the Bk-Cf-Es-Fm fraction. The second group may be further divided by oxidizing the Bk to the tetravalent state and extracting it from 8 N HNO_3 with a dialkylphosphate. The final separation of Es, Fm, and Cf is done on a small cation exchange column using α-hydroxy isobutyrate solution as a chromatographic elutriant.

The Am-Cm concentrates from plutonium irradiations will be nitrate solutions. These special runs will utilize a head-end treatment to convert the solutions to the chloride system. The curium-242 program, the TRU development targets, and the six-month HFIR target processing begin with a target dissolution step using dilute hydrochloric acid.

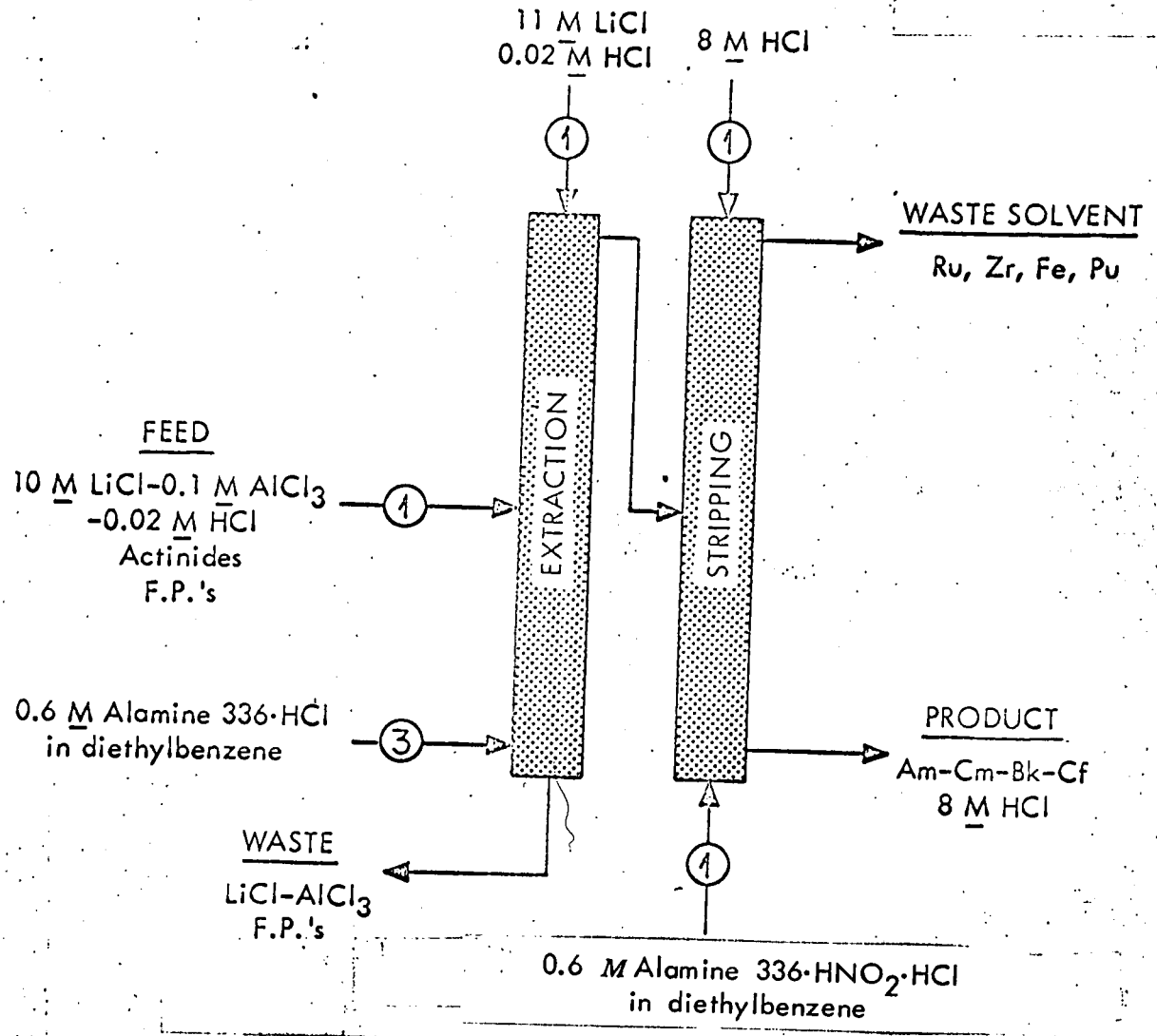

Fig. 2. Flowsheet for the Tramex Process.

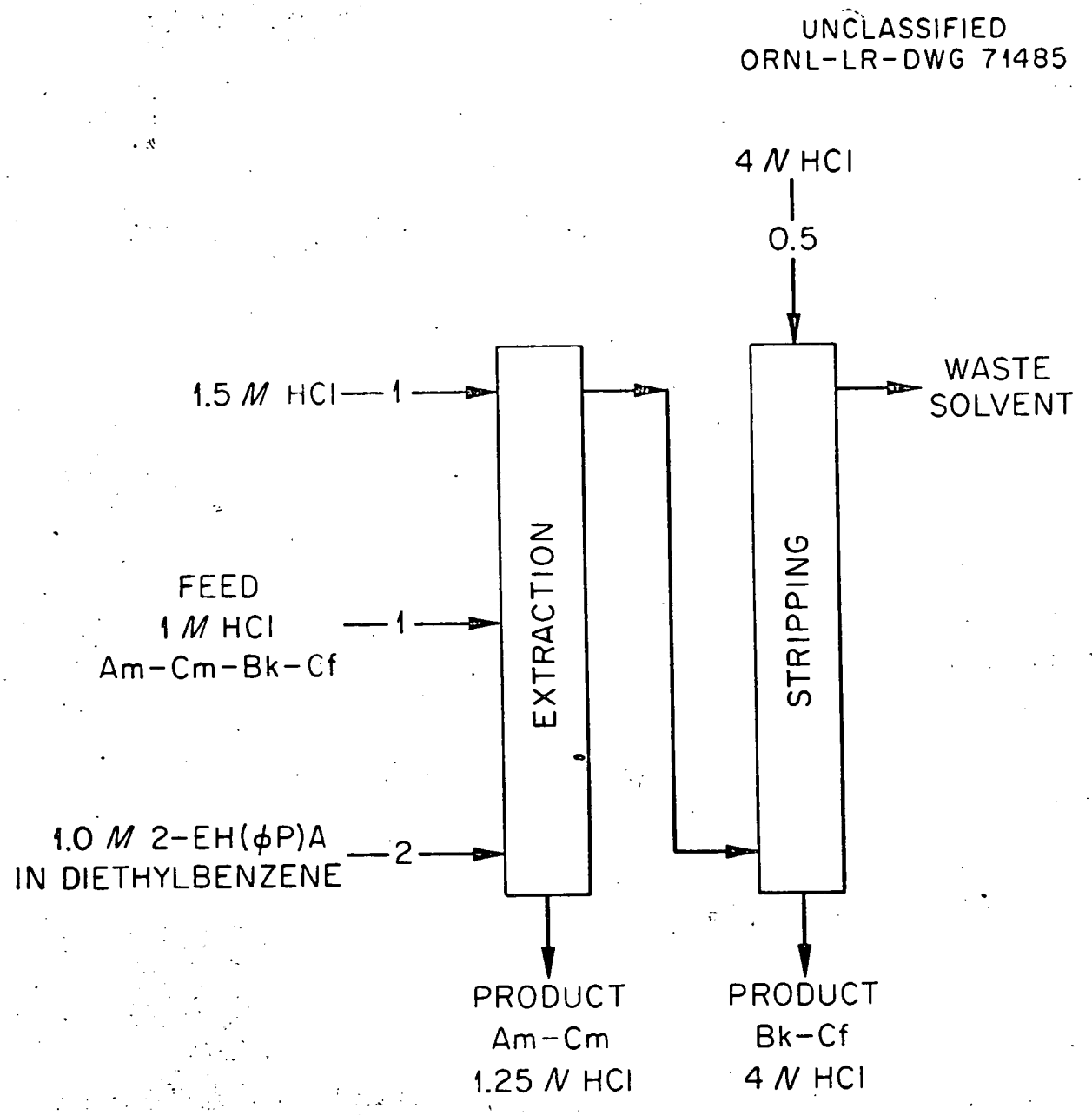

Fig. 3. Phosphonate Extraction Flowsheet for Separating Transcurium Elements from Am and Cm.

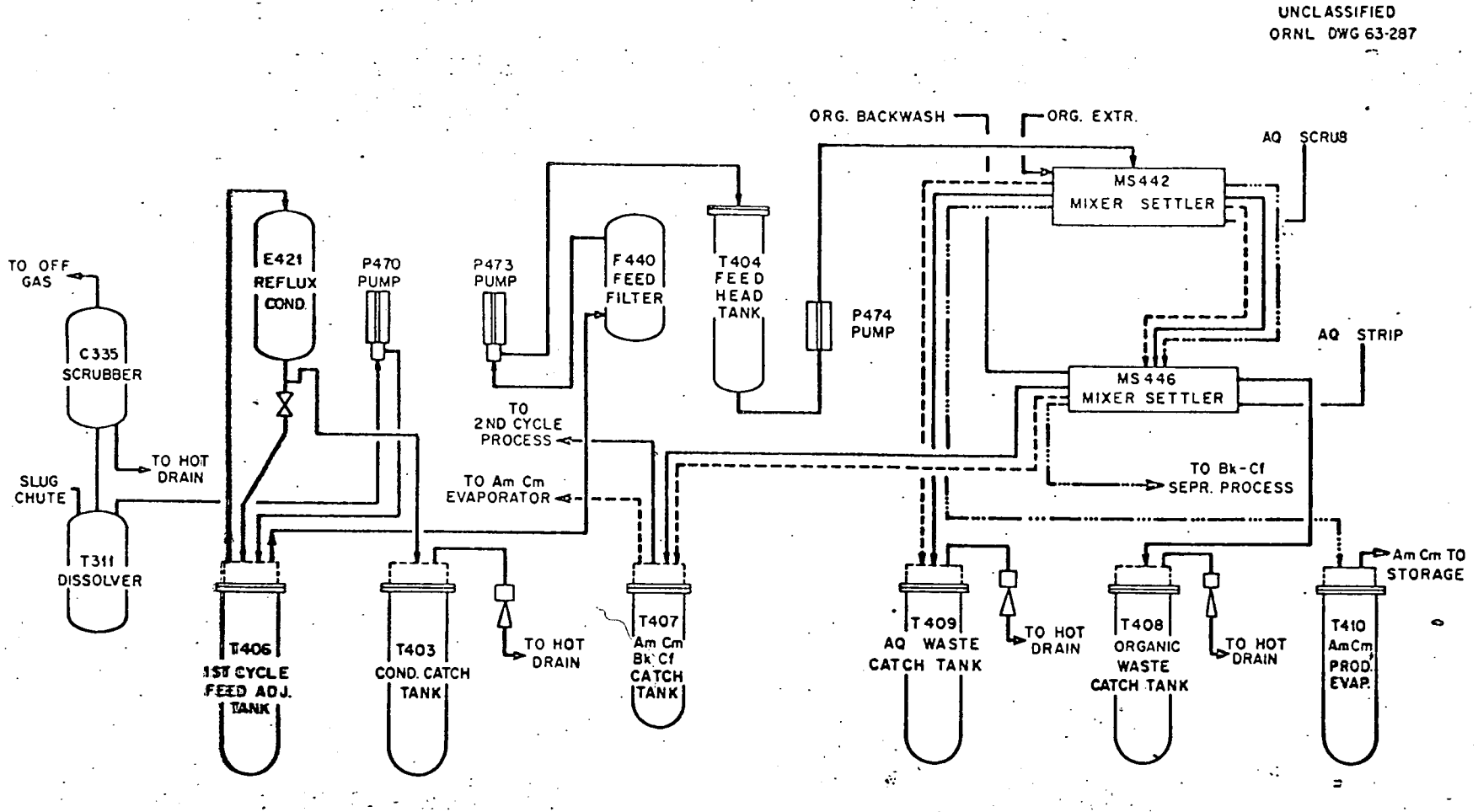

FIG. 4 TRANSURANIUM DEVELOPMENT EQUIPMENT FLOWSHEET

3.1 The Nitrate Removal Step

The SRL concentrate will be boiled down a factor of 8 in volume and diluted to the original volume with 3 N HCl. The adjusted feed flows countercurrent to Alamine 336-HCl in diethyl benzene (DEB); 3 N HCl is used as scrub. The mixed feed and scrub solutions contain the values; the nitrate ions are extracted into the Alamine 336 liberating chloride ions in exchange. The organic is discarded, and the aqueous stream is boiled down with LiCl addition for use as Tramex feed.

The other concentrates (from Cell 1 operations) are salted (about 3 M $LiNO_3$). These feeds are boiled down with diban to produce a high salt - low acid feed. The actinides are extracted into Alamine 336-HNO_3; concentrated $LiNO_3$ is used as scrub. The actinides are stripped with dilute HCl; Alamine 336 (base form) in DEB is used as scrub. Some decontamination from fission products may be realized in this step. The actinides are recovered in dilute HCl and converted to Tramex feed by LiCl addition and boildown.

3.2 Target Dissolution Step

The targets consist of pressed pellets of aluminum powder and actinide oxide canned in an aluminum shell. Approximately 50 g of aluminum (total) is used for each gram of curium-242 formed. The aluminum in the can and in the pellet matrix is dissolved in 2 N HCl at a controlled rate by temperature control in the dissolver. The dissolver will be controlled at 60°C by cooling water in the jacket or coils. The dissolver solution will be boiled down with LiCl addition to produce adjusted Tramex feed.

3.3 Tramex Process

The feed for Tramex is at least 10 M LiCl, less than 0.1 M $AlCl_3$, and between 0.02 and about 0.1 N HCl. Complicating factors are the limited aluminum solubility, the large inverse dependence of the distribution ratio of actinides on acid in the feed, and radiolysis of the acid in the feed causing actinide precipitation. Continuous feed adjustment is feasible with rapid and reasonable precise analysis of the feed.

The actinides are extracted into Alamine 336 - HCl in DEB and scrubbed with 11 M LiCl. The lanthanides and some fission points remain in the raffinate. The actinides are stripped with 8 N HCl and scrubbed with Alamine 336 - HNO_2 - HCl mixture. The extraction fission points — with the exception of Ag^{111} — are not stripped.

3.4 Tramex Products

Curium-242 - The curium product is converted to nitric acid solution by repeated boildowns with concentrated HNO_3. The final concentration is about 0.25 g/liter curium-242.

Cell 1 Concentrates - The americium-curium product will be transferred to Cell 3, boiled down to essential dryness, taken up in a small volume of 0.1 N HCl, slowly added to 2 M K_2CO_3, oxidized with hypochlorite and the Am(V) carbonate is precipitated as $KAmCO_3$. The supernate contains the curium; the americium is recovered as a precipitate.

SRL Concentrate - The product is boiled down with concentrated HNO_3 to give a nitrate solution of about 5 g/liter each of americium-243 and curium-244.

3.5 Special Targets for TRU Development

The special solutions to be processed for Cf-Bk-Es-Fm recovery will be boiled down and diluted to reduce the acid concentration to 1 N HCl. The transcurium elements are extracted into 1 M 2-EH(phenyl phosphonic) acid in DEB; the americium-curium remain in the aqueous raffinate. A scrub of 1.5 N HCl is used. The transcurium elements are stripped with 4 N HCl. Relatively little decontamination from fission products should be necessary at this stage. Special bench size equipment will be set up in open-topped processing boxes in Cell 3 for additional separations and for experimental work as needed.

4.0 PHYSICAL DESCRIPTION AND CONTAINMENT FEATURES

4.1 Building Containment

Building 4507 is a brick building with a penthouse structure constructed from insulated sheet metal. Vestibule personnel entrances are provided and the building is sealed against leaks so as to be able to maintain -0.3-in.-water with respect to the atmosphere. The building and penthouse provide secondary containment for radioactive materials handled. A detailed description of the building and its containment features is described by A. M. Rom, Building 4507, High Level Chemical Development Facility - Hazards Evaluation, Vol. 10, ORNL CF-60-5-25 (May 20, 1960).

4.2 Cell Containment

Primary containment is provided by the cell, which has internal dimensions 6 ft wide, 10 ft long, and 11'9" high. There is a 10-in. lead floor in the cell beneath which are two storage tanks, thus making the total cell height 15'6" from the bottom of this pit to the ceiling of the cell.

The front and side walls of the cell are 4 ft thick barytes concrete. The front wall contains a 4-ft-thick lead glass window. The rear wall is 5 ft 6 in. thick concrete and the roof is 5-ft-thick concrete. All openings into the cell are sealed against extraneous leaks, allowing air access to the cell only as planned via the air inlet duct in the rear door.

A 6 ft wide by 6 ft-6 in. high opening in the rear of each cell is closed by a concrete door that rolls on wheels and track. This door is sealed by a gasket joint against an angle iron framework inside the cell. The existing 4 x 6 ft opening in the roof of the cell has been replaced with special roof plugs to accommodate the equipment handling facilities needed for the present program.

The cell has two 10-in. dia sleeves in the operating face for a pair of Model 8 manipulators. In addition, the front of the cell has one 6-in. sleeve, one 3-in. sleeve, and twenty-three 2-in. sleeves. The rear wall contains four 2-in. sleeves and one 3-in. sleeve to the second floor at the rear of the cell bank. The roof of the cell contains one 5-in. sleeve and two 6-in. sleeves to the penthouse.

Each of the above-mentioned sleeves is sealed at the exterior by a gasket or enters a special bulkhead located in the cell.

4.3 Alpha Hazard Containment

Additional means of containment provided in Cell 4 in recognition of the alpha hazard problems are as follows:

1. The manipulators will be equipped with a replaceable boot. The wall juncture is made with a compression rubber gasket seal ring on the inside of an extension of the manipulator sleeve (Dwg. No. D-53664). This ring is pushed into the cell with a following replacement ring with a new boot attached.
2. Bulkhead boxes are installed in the rear top, and right and left front top corners of the cell. All service, chemical, and electrical lines entering through the existing holes in the cell face and rear are sealed in passing through the walls of these boxes (Dwg. No. E-53550).
3. A bulkhead has been installed immediately inside the rear cell entry to supplement the rear door gasketed seal (D-45943). This bulkhead contains air filters for cell ventilation and a viewing window containing glove ports. This will permit minor maintenance to be performed on the mixer settlers without breaking cell containment after proper cell decontamination.
4. A seal plate has been installed below the existing roof plug opening and all penetrations through this plate are welded to it and form a continuous seal with roof area maintenance and sampling equipment.

4.4 Cell Support Equipment

4.4.1 Operating Area

The operating area located at the window side of Cell 4 contains the instrument panel and the service piping rack. All water, air, and steam services entering the cell from this area are metal construction and are equipped with check valves to prevent contamination backup into the operating

area. The spare lines terminating in the operating area are capped off in this area as well as plugged in the cell. The instrument panel recorders are fed from transmitters located at the rear of the cell. Wiring to the cell enters the cell via bulkhead seals.

4.4.2 Chemical Makeup Area

The chemical makeup area contains all the tanks and pumps for feeding cold chemical streams to the solvent extraction equipment in the cell. The tanks, pumps, and piping are a closed system equipped with a caustic scrubbed vent system.

This area also contains the transmitters for air purge instruments, the vacuum-pressure air drive system mounted in an alpha sealed glove box for the in-cell transfer pumps, the warm water heating system for the mixer settlers, and the solution addition funnel station for transferring solutions to the cell tanks. These funnels are also enclosed in an alpha-sealed glove box. The piping from this area enters the cell via existing sleeves and through a bulkhead box in the cell.

4.4.3 Roof Area

A schematic layout of the equipment located in the roof area is shown on Drawing E-53650 with detailed layouts shown on Drawings D-45917, E-53653, and D-45820.

The large box straddling Cells 3 and 4 is an alpha sealed Equipment Removal Cubicle (D-45917) to be used for maintenance and transfer of large items of cell equipment. It is sealed from the cell during normal operation by lead and concrete shielding plugs and a gasketed seal plate. Items transferred into or out of this cubicle will be bagged utilizing standard alpha contaminated equipment transfers.

The Sample Transfer System (E-53653) is connected to Cell 4 via an 8-in. diameter shielded transfer tube terminating in an alpha-sealed lead shielded glove box. Samples are transferred from this box via a sealed container into a shielded carrier or into the adjacent cold transfer box where alpha contaminated transfer techniques are used.

Small items of decontaminated equipment from the cell may follow this hot to cold box route as well as the reverse procedure being used to admit small items to the cell.

The cell to box transfer tube has a gasketed shielding door at its upper terminus to limit the amount of cell contamination entering this box as well as shield personnel hands during necessary maintenance.

The Mixer-Settler Drive Box (D-45820) is an alpha-sealed glove box containing motors for driving cell equipment. The tubes containing the flexible shafts are air purged with ventilation air to limit contamination from the cell through the bearings. The shafts can be removed for maintenance by disconnecting in the cell and bagging them out through the port on top of this box.

4.5 Ventilation and Vessel Off-Gas

4.5.1 Existing Ventilation and Vessel Off-Gas

The existing air handling and vessel off-gas flow patterns are shown in Fig. 5 and 6 and are described by J. R. Flanary and J. H. Goode, Building 4507 Operations Manual, ORNL 61-9-24, Rev. 1 (September 25, 1962).

4.5.2 Cell and Support Equipment Ventilation

The air handling patterns and pressures planned for Cell 4 are shown on Drawing D-45875. The negative pressures indicated on this schematic are with respect to the operating area of the building.

4.5.3 Cell Vessel Off-Gas

All cell processing equipment is vented to a common Cell 4 off-gas header, passed through a caustic scrubber, a control valve to maintain the vessels at 2 in. of water negative to the cell, and then to the building vessel off-gas header.

4.5.4 Makeup Area Equipment Ventilation

The makeup area tanks are vented to a caustic scrubber and through a control valve to maintain the makeup tanks at 0.5 in. of water negative to the area in which they are located. This system discharges to the cell ventilation system via a 2-in. pipe to the main cell exhaust duct.

The glove boxes containing the drive system for the cell pumps and the solution addition funnels are vented to the above system downstream of the scrubber through an absolute and roughing filter.

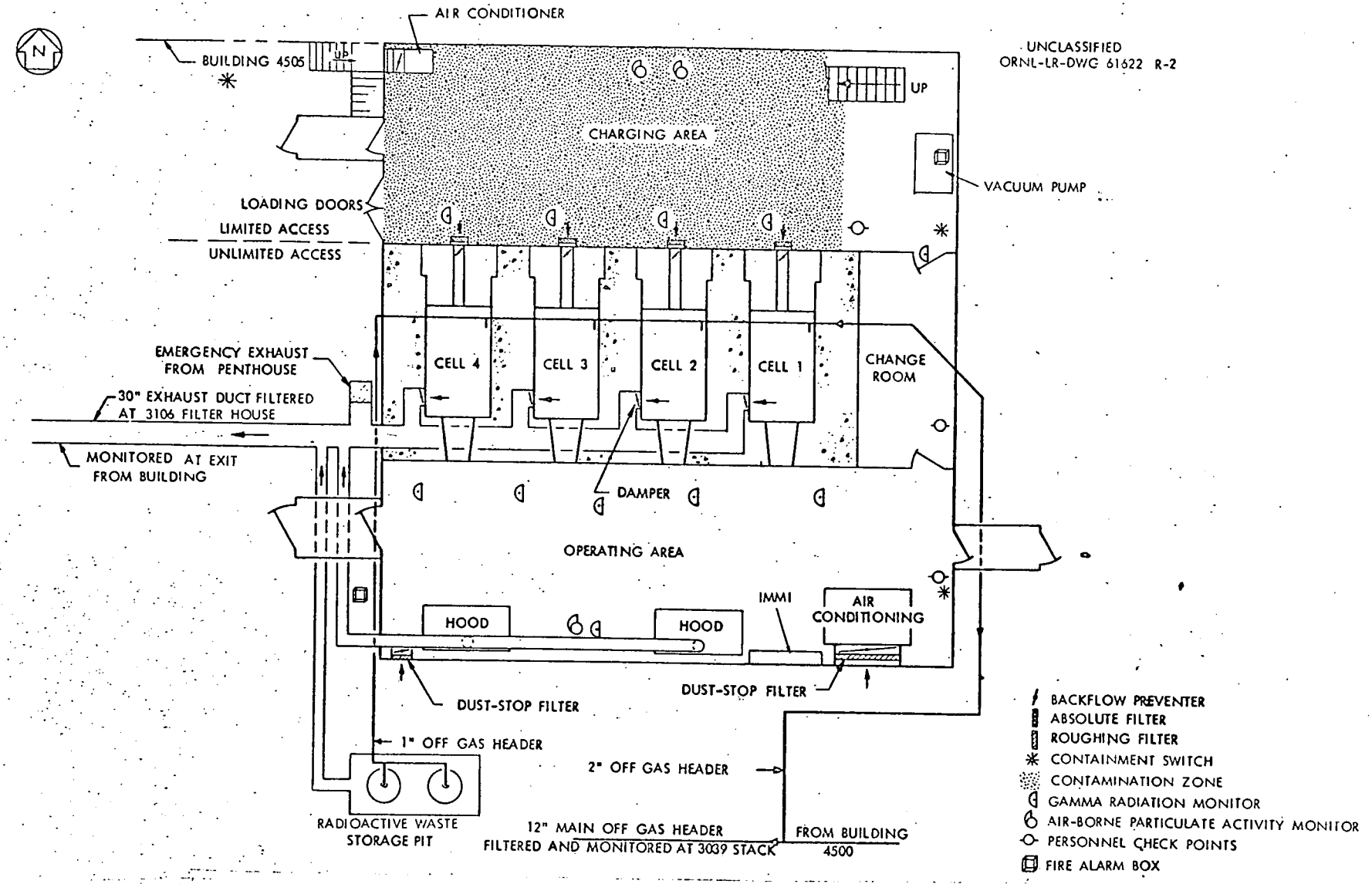

FIG. 5 BUILDING 4507 FIRST FLOOR PLAN VENTILATION SCHEMATIC

UNCLASSIFIED
ORNL-LR-DWG 61623 R-2

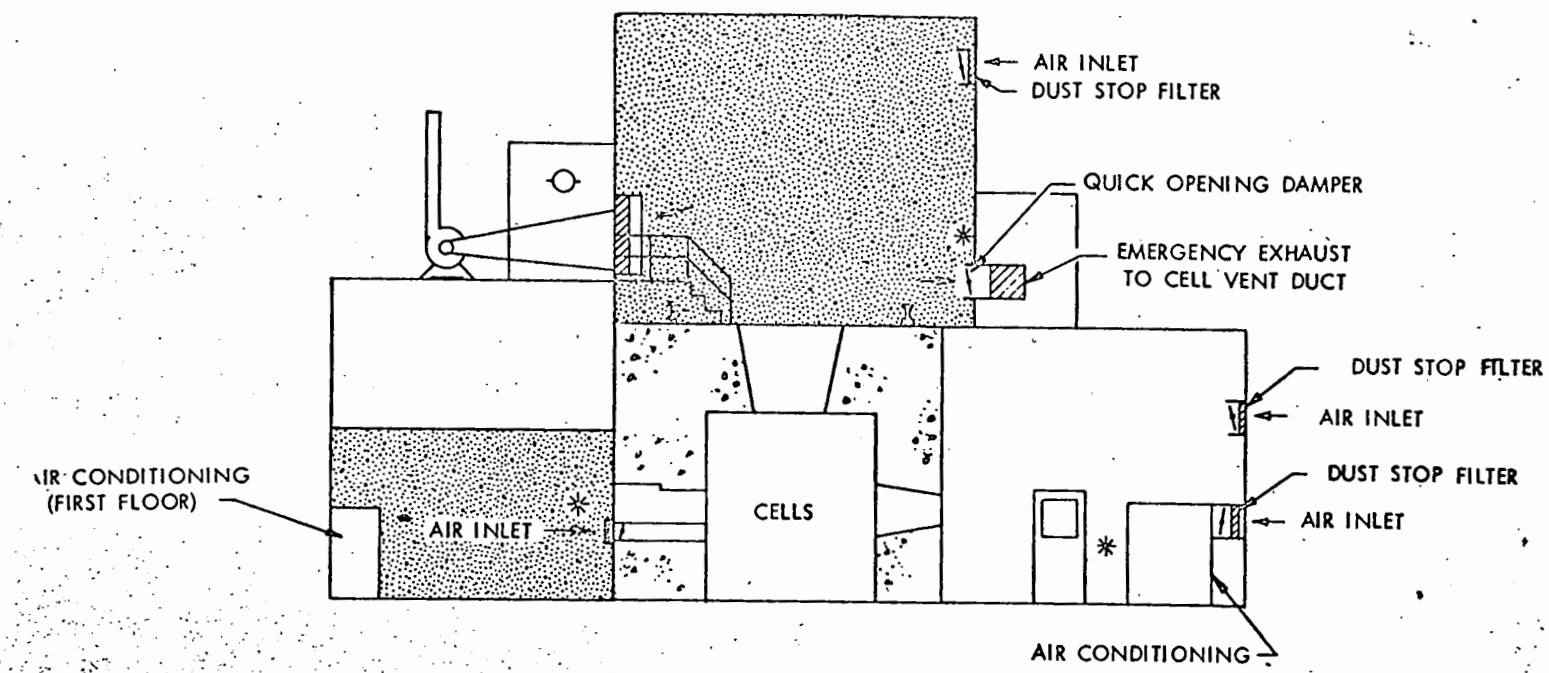

FIG. 6 BUILDING 4507 SECTION VIEW VENTILATION SCHEMATIC

Scale ~ 1/8" = 1'-0"

BACKFLOW PREVENTER
ABSOLUTE FILTER
ROUGHING FILTER
CONTAINMENT SWITCH
CONTAMINATION ZONE
PERSONNEL CHECK POINTS

The discharge from the vacuum pump used as the vacuum source for the cell pumps discharges to the Cell 4 vessel off-gas system.

4.6 Liquid Waste Disposal

All chemical liquid wastes will be accumulated in cell tanks and sampled for product content prior to discharge to the plant radioactive chemical waste system.

The aqueous and organic wastes from the solvent extraction system will be neutralized by contacting with a caustic stream jetted into the hot drain from Cell 4, simultaneously with the waste stream. The overhead boiloff from the feed adjustment tanks will be neutralized directly in T-403 and discharged by water jet to the hot drain.

Steam condensate from the tank heating coils will be checked by sampling and discharged to the process drain of Cell 4. All cooling water in the cell will discharge to a monitoring station located on the roof of Cell 4 and will then discharge to the process drain. A leak of activity in to this system will automatically divert the stream to the hot drain and sound an alarm on the instrument panel.

5.0 QUANTITIES OF RADIOACTIVE MATERIALS

The quantities of actinides and fission products to be processed in the TRU development equipment in Cells 3 and 4 of Building 4507 are:

(1) Am-Cm rare earth fraction from 24 SRP cross-section rods
(2) Am-Cm-RE fraction from 8 SRP-TRU rods
(3) Am-Cm-RE fraction from 112 SRP-TRU rods
(4) Cm-242 targets
(5) A six-month irradiated TRU-HFIR target

Properties of the actinides and fission products in these programs are summarized in Table 1. Gamma shielding is governed by rare earth fission products from the SRP rods. Neutron shielding is governed by the Cm-242 and TRU-HFIR targets. The heat dissipation rate will be highest for the Cm-242 targets.

Table 1. Summary of Properties of Actinides and Fission Products in Transuranium Development Programs

General Process	A	A	B	A	C
	Program				
Property	Am-Cm-RE Fraction From 24 SRP Cross-Section Rods	Am-Cm-RE Fraction From 8 SRP-TRU Rods	Cm-242 Targets	Am-Cm-RE Fraction From 112 SRP-TRU Rods	Six-Month TRU-HFIR Target
Post-irradiation decay time, days	1100	480	10	120	30
Actinide content, gms	5.7	25	42	400	7.1
F.P. content, curies	30,000	14,000	5500	200,000	6000
Actinide heat rate, watts	3	33	1800	725	13
FP heat rate, watts	65	50	22	700	39
Neutron release rate, neuts/sec	8×10^{6} [a]	1.1×10^{8} [a]	[b] 3.7×10^{9}	2.4×10^{9} [a]	[b] 3.5×10^{9}

a - including α-n contributions from oxygen.

b - including α-n contributions from aluminum.

The calculated properties of the Am-Cm-RE fraction from 24 cross-section rods, 8 SRP-TRU rods, and 112 SRP-TRU rods are given in Tables 2, 3, and 4.

Cm-242 will be prepared by irradiating Am-241 targets in the ORR, GETR, or MTR for an exposure equivalent to 50 days at a thermal flux of approximately 3×10^{14}. Individual targets contain 3 g Am-241 as AmO_2-Al cermet pellets clad with Al and are approximately 1/2-in.-dia by 8-in. long. For those programs requiring 8 g Cm-242 it is planned that 16 g of Cm-242 will be prepared (to allow for losses and decay) by irradiating 15 targets containing 45 g Am-241. For programs requiring 4 g Cm-242 it is planned that 7.5 g will be prepared by irradiating 7 targets containing 21 g Am-241. Processing of the targets in Building 4507 will begin after approximately 30 days of post-irradiation decay time. The calculated products of the irradiation, 30 days after reactor discharge, are given in Table 5. The calculated properties of the fission products resulting from the irradiation are tabulated in Table 6.

Properties of a TRU-HFIR target, irradiated for six months and allowed to decay for 30 days, are given in Table 7.

Table 2. Calculated Properties of the Am-Cm-RE Fraction from 24 Cross-Section Rods, as of June, 1963

Isotope	Quantity	Heat Generation Rate (watts)	Neutron Emission Rate (neutrons/sec)	
			0 α-n	SF
Am-241	2 g	0.2	-	-
Cm-242	0.003 g	0.4	6×10^4	6×10^4
Am-243	3 g	-	-	-
Cm-244	0.7 g	2	3×10^5	8×10^6
Ce-Pr-144	18,000 C	60	-	-
Pm-147	10,000 C	4	-	-
Eu-154	190 C	0.7	-	-
Eu-155	75 C	0.3	-	-

Table 3. Calculated Properties of the Am-Cm-RE Fraction from 8 SRP-TRU Rods, as of June, 1963

Isotope	Quantity	Heat Generation Rate (watts)	Neutron Emission Rate (neutrons/sec)	
			0 α-n	SF
Am-241	0.02 g	-	-	-
Cm-242	0.03 g	3.7	6×10^5	6×10^5
Am-243	15 g	0.1	-	-
Cm-244	10 g	29	4×10^6	1.1×10^8
Ce-141	140 c	0.2	-	-
Ce-Pr-144	13,000 c	45	-	-
Pm-147	450 c	0.2	-	-
Eu-154	60 c	0.3	-	-
Eu-155	380 c	1.7	-	-

Table 4. Calculated Properties of the Am-Cm-RE Fraction from 112 SRP-TRU Rods 120 days post-irradiation decay time

Isotope	Quantity	Heat Generation Rate (Watts)	Neutron Emission Rate (neutrons/sec)	
			0 α-n	SF
Am-241	0.02 g	-	-	-
Cm-242	0.7 g	85	1.4×10^7	1.4×10^7
Am-243	170 g	1	-	-
Cm-244	220 g	640	9.2×10^7	2.4×10^9
Ce-141	390 c	0.5	-	-
Ce-Pr-144	200,000 c	700	-	-
Pm-147	4500 c	2	-	-
Eu-154	500 c	2	-	-
Eu-155	450 c	2	-	-

Table 5. Products of Irradiation of 45 g Am-241 for 49 Days in Perturbed Thermal Flux of 3.0×10^{14}.

(30 days post-irradiation decay time)

Isotope	Weight of Isotope (g)	Heat Generation Rate (Watts)	Neutron Emission Rate (neutrons/sec)	
			Al α-n	SF
Am-241	13.5	1.4	-	-
Am-242 (1)	0.2	-	-	-
Am-243	2.5	-	-	-
Cm-242	14.7	1800.	3.4×10^9	0.29×10^9
Cm-243	0.19	.3	-	-
Cm-244	0.27	.8	0.001×10^9	0.003×10^9
Pu-238	3.7	2.0	0.003×10^9	-
Pu-239	0.31	-	-	-
Pu-240	2.1	-	-	-
Pu-241	0.7	-	-	-
Pu-242	4.2	-	-	-
F.P.'s	2.6 (5500 curies)	22.	-	-
I-131	150 curies	-	-	-
Xe-133	54 curies	-	-	-

Table 6. Properties of Fission Products Resulting from Irradiation of Am-241.

(2.6 grams of fission products are formed per 45 grams of Am-241 irradiated)

		Decay Time					
		1 sec	1 day	10 d	30 d	60 d	90 d
Beta activity, curies/gm FP's		5.218×10^{4}	8.382×10^{3}	3.872×10^{3}	2.133×10^{3}	1.284×10^{3}	9.255×10^{2}
Gamma activity, curies/gm		5.549×10^{4}	5.272×10^{3}	2.151×10^{3}	1.127×10^{3}	6.374×10^{2}	4.386×10^{2}
Beta heat rate, watts/gm		3.897×10^{2}	1.623×10^{1}	6.500	3.702	2.296	1.686
Total heat rate, watts/gm		7.277×10^{2}	3.796×10^{1}	1.614×10^{1}	8.474	4.835	3.411
Gamma Photons/sec-gm FP's							
Group	Energy, Mev						
1	0.300	3.968×10^{14}	5.681×10^{13}	2.275×10^{13}	1.151×10^{13}	6.010×10^{12}	3.843×10^{12}
2	0.630	8.075×10^{14}	9.891×10^{13}	3.451×10^{13}	1.961×10^{13}	1.242×10^{13}	8.959×10^{12}
3	1.100	3.335×10^{14}	1.588×10^{13}	8.886×10^{12}	6.195×10^{12}	4.202×10^{12}	3.103×10^{12}
4	1.550	2.168×10^{14}	1.982×10^{13}	1.230×10^{13}	3.986×10^{12}	8.188×10^{11}	2.557×10^{11}
5	1.990	1.090×10^{14}	2.093×10^{12}	2.533×10^{11}	9.453×10^{10}	3.717×10^{10}	1.981×10^{10}
6	2.380	7.615×10^{13}	1.389×10^{12}	7.931×10^{11}	2.708×10^{11}	8.554×10^{10}	4.117×10^{10}
7	2.750	4.180×10^{13}	1.789×10^{11}	1.056×10^{11}	3.611×10^{10}	9.443×10^{9}	4.513×10^{9}
8	3.250	3.042×10^{13}	1.798×10^{10}	1.420×10^{10}	8.718×10^{9}	4.073×10^{9}	2.085×10^{9}
9	3.700	2.253×10^{13}	1.165×10^{10}	8.865×10^{9}	4.964×10^{9}	2.159×10^{9}	1.072×10^{9}
10	4.220	1.086×10^{13}	3.395×10^{3}				
11	4.700	5.250×10^{12}	9.850×10^{2}				
12	5.250	2.485×10^{12}	3.067×10^{2}				

Table 7. Actinide and Fission Product Content of a TRU-HFIR Target after 6 Months Irradiation and 30 Days' Decay

Isotope	Quantity (g)	Heat Generation Rate (watts)	Neutron Emission Rate (neutrons/sec)	
			Al α-n	SF
Pu-242	1.0	-	-	-
Am-243	0.5	-	-	-
Cm-244	4.6	13.4	2.0×10^7	5.0×10^7
Cm-245	0.61	-	-	-
Cm-246	0.35	-	-	-
Cm-247	0.012	-	-	-
Cm-248	0.033	-	-	-
Bk-249	5.6×10^{-5}	-	-	-
Cf-250	5×10^{-5}	-	-	-
Cf-252	3.5×10^{-4}	-	-	1.1×10^9
Cf-254	1.8×10^{-6}	-	-	2.4×10^9
F.P.'s	8000 curies	39	-	-
I-131	53 curies			
Xe-133	23 curies			
Kr-85	1.3 curies			

6.0 HAZARDS

Radiation hazards in the operation of Cells 3 and 4 are caused by the possibility of exposure to penetrating radiation and normal or accidental release of radioactive material to the building or to the atmosphere. The shielding of the facilities is such as to control the penetrating radiation dose rate within acceptable levels. The routine release of radioactive gases and aerosols is minimized by passing vessel off gases through a caustic scrubber in Building 4507 and through the Laboratory VOG caustic scrubber and high efficiency filtration system. Special safeguards are utilized to minimize the probability of occurrence of potentially serious accidents involving fires or explosions. If these safeguards should fail, however, and such an accident occurs, the containment and ventilation systems limit the effects to tolerable levels.

6.1 Penetrating Radiation

During normal operation in Cells 3 and 4 the gamma and neutron dose rate in the operating area is to be no greater than 0.25 mrem/hr, with permissible hot spots of small area, such as those opposite wall penetrations, no greater than 2.5 mrem/hr. For special, non-routine operations such as when a TRU-HFIR rod is examined in front of the cell window, the neutron dose rate in the operating area will be approximately 2.5 mrem/hr. In limited access areas, not normally inhabited by operating personnel, the dose rate is to be less than 2.5 mrem/hr, with limited area hot spots no greater than ten times this value. For short-term, nonroutine operations, such as during equipment removal or carrier handling, radiation levels as high as 500 mrem/hr will be permitted. For very nonroutine operations, such as those involving special handling of small samples, radiation levels as high as 10 R/hr will be permitted under the direct supervision of the engineer in charge of operations (V.C.A. Vaughen) and HP personnel.

6.2 Operational Release of Radioactive Materials to the Atmosphere

Rare gases and halogens, from dissolution of Cm-242 or TRU-HFIR targets, and miscellaneous aerosols containing actinide elements and fission products will be released in small quantities through the vessel off-gas system to

the ORNL 3039 stack during routine operations in Cells 3 and 4. There will be no significant halogen or rare gas release during the processing of the relatively long decayed Am-Cm-RE solutions but a small fraction of the liquid aerosol formed in mixing and pumping operations will penetrate the filters and be exhausted to the stack.

Curium-242 targets will be dissolved at rates not to exceed two targets/day. Each target will contain approximately 10 curies of I^{131} and 3.6 curies Xe^{133}. Assuming that iodine is decontaminated by a factor of 200 in the Cell 4 VOG scrubber, ventilation lines, and the VOG caustic scrubber at the 3039 stack, the continuous release rate of I^{131} will not exceed 0.1 curies/day. Assuming that the maximum average dilution and deposition factors for the 3039 stack are 1.6×10^{-5} curies/m^3 per curie/sec and 1.6×10^{-7} curies/m^2 per curie, respectively, the maximum average ground concentration of I^{131} (averaged over one day) will not exceed 0.2% MPC_a-40 and the maximum average ground contamination will not exceed 4000 d/min-dm^2. Assuming that the Xe^{133} in two targets will be released over a period of at least 5-10 minutes, the maximum average downwind ground concentration will not exceed 3% MPC_a-40 (0.075 mr/hr).

Dissolution of one six-month irradiated TRU-HFIR target will release 53 curies I^{131}, 23 curies Xe^{133} and 1.3 curies Kr^{85} to the VOG system. Assuming a system DF of 200 the I^{131} release (0.26 curies at average rate of 0.26 curies/day) would cause maximum average downwind ground concentrations (averaged over 1 day) of 0.5% MPC_{a-40} and maximum average deposition not exceeding 900 d/min-dm^2. Assuming that the Xe^{133} and Kr^{85} will be released over a period of at least 5-10 minutes, the maximum average downwind concentration from this source will not exceed 10% MPC_{a-40}.

Release of aerosols of mixed fission products and actinides from Building 4507 to the 3039 stack will be maintained at rates less than 1 millicurie/day and 10 microcuries/day, respectively. The release of fission products will cause maximum average downwind ground concentrations of $<$ 0.01% MPC_{a-40} and long-term ground contamination not exceeding 100 d/min-dm^2. The release of alpha emitters will cause maximum average downwind ground concentrations less than 0.1% MPC_{a-40} and long-term ground contamination not exceeding 3 d/min-dm^2.

6.3 Fires

Fires within Cell 3 or 4 may be extremely hazardous, since they could conceivably raise the cell pressure and temperature and disperse radioactive material as smoke. A temperature indicator, mounted at the roof of the cell, sounds an alarm in the operating area and at the ORNL master control panel if the temperature in either cell exceeds 140°F. In the event of a temperature alarm, a manually operated water sprinkler head in either cell may be actuated at the discretion of operating personnel or firemen. The volume of water will thus be limited to the minimum required for fire extinguishment. The cell sprinkler heads are not automatically actuated since water from an uncontrolled release cannot be removed conveniently from the cell.

Fires in the operating area, charging area, and penthouse would not cause a serious radiation hazard because these areas are protected by automatic water sprinkler systems and will contain relatively little radioactive material in a dispersible form.

The worst credible consequences of a fire would occur in Cell 4 if solvent (0.6 M Alamine-336 in diethylbenzene) laden with actinides and fission products were to leak from the mixer settlers to a cell floor pan and be ignited. As a worst case, it is assumed that radioactive solvent that might burn would be no more than the equivalent of 0.5 liters of solvent containing actinides and fission products at a concentration of 10 watts/liter (0.6 g Am^{243}, 0.8 g Cm^{244}, and 700 curies rare earth fission products). No more than 1% of the radioactive smoke (0.01 to 1 μ in size) would be expected to pass through the ventilation ducts and high efficiency filters and be exhausted through the ORNL 3039 stack.[1] This release would cause maximum downwind personnel doses from inhalation of less than 1 rem. No more than 35 square miles of ground downwind from the stack would be contaminated to levels greater than 1000 d/min-dm^2 of β-γ and 30 d/min-dm^2 of α, even in the event of worst possible conditions for optimum rainout.

6.4 Explosions

Possible sources of explosions in Cells 3 and 4 are solvent vapor and hydrogen generated by radiolytic decomposition of water and in dissolution of Cm^{242} or TRU-HFIR targets. Explosions are possible only in certain process vessels; it is not possible that an explosive concentration could occur in a significant fraction of the volume of a cell since the temperature of the cell will be well below the flash point of the solvent (70 - 80°C) and the cell ventilation rate is sufficient to dilute the hydrogen formed at credible rates below the minimum flammable concentration.

An explosion would be possible in mixer-settlers only if temperature control were lost and there is a source of ignition. The mixer-settlers are to be normally maintained at ~50°C while the flash point of the solvent is 70-80°C. If an explosion were to occur in the vapor space of a mixer settler, shock waves at the cell walls and window would be less than those from the equivalent of 3 lbs TNT (the cell is designed to withstand the blast effects of 3 lbs TNT without gross breach of containment). The gas pressure in the cell would not rise above atmospheric. The worst activity release would occur if the explosion initiated a fire in the radioactive solvent and would have the same effects as the worst conceivable fire treated in the previous section.

Approximately 125 STP liters of hydrogen gas will be generated in the dissolution process for each 100 grams of aluminum dissolved. The hydrogen will be generated over a period of several hours in each dissolution. The hydrogen will be diluted continuously with air such that the concentration of hydrogen in the air will be less than 4% (the minimum flammable concentration).

Radiolytic hydrogen will be generated at maximum rates of approximately 0.8 ft^3/hr, the rate of generation in the Am^{241}-Cm^{242} solution resulting from 15 Cm^{242} targets. All tanks will be continuously purged with sufficient air to reduce hydrogen concentration to less than 4% in the vapor space of the tanks.

The effect of a hydrogen-air explosion in the vapor space of the dissolver or other process tankage would be to shatter the tank and generate a radioactive liquid aerosol in the cell air. The volume of H_2-air mixture that might be involved in an explosion would not exceed 10 cu ft. Explosion of 10 cu ft of H_2-air mixture would cause the cell pressure to rise instantaneously to approximately 60 in. w.g. above atmospheric but the capacity of the ventilation system is such that the cell pressure would return to less than atmospheric pressure in approximately 1 second. Such an explosion would generate shock waves less energetic than those from 3 lb TNT, which the cell may withstand without gross breach of containment.

Using the methods of ORNL-3441[1] the quantity of radioactive liquid aerosol released through the filters to the 3039 stack would be that equivalent to one cell volume of air at an aerosol concentration of 0.14 mg/m^3 of air. Assuming that the liquid in the aerosol is at the initial solution concentration (10 watts/liter), the radioactivity release to the environment would be 4×10^{-6} g Cm^{244} and 3.6×10^{-3} curies of fission products. This release would cause maximum downwind doses not exceeding 1 mrem and no more than 0.02 square miles downwind contaminated above 1000 d/min-dm^2 of β-γ and 30 d/min-dm^2 of α.

References

1. C. E. Guthrie and J. P. Nichols, "Theoretical Possibilities and Consequences of Major Accidents in U-233 and Pu-239 Fuel Fabrication and Radioisotope Processing Plants," ORNL-3441 (to be published).

APPENDIX

Drawing Number	Title
E-45802	Am-Cm Recovery Engineering Flowsheet - 1 of 4
E-45803	Am-Cm Recovery Engineering Flowsheet - 2 of 4
E-45804	Am-Cm Recovery Engineering Flowsheet - 3 of 4
E-45805	Am-Cm Recovery Engineering Flowsheet - 4 of 4
D-53675	Am-Cm Purification Pu Recovery Raffinate No. 1 - Chemical Flowsheet
D-53676	Am-Cm Purification Pu Recovery Raffinate No. 2 - Chemical Flowsheet
D-53677	Cm-242 Solvent Extraction Chemical Flowsheet
D-53678	Solvent Extraction Recovery of Am & Cm Chemical Flowsheet
D-53664	Manipulator Boot Shoulder Seal Assembly
E-53550	Bulkheads, Plans and Details
D-45943	Cell 4 Sealing Membrane Assembly
D-45917	Equipment Removal Cubicle Layout
E-53650	Enclosures and Equipment Above Cells 3 and 4
E-53653	Sample Transfer System Layout
D-45820	Mixer Settler Drive Assembly
D-45875	Schematic Air Flow Diagram
E-53562	MS-442, MS-446, 16-Stage Mixer Settler Assembly
E-53525	Equipment Layout Cell 4
E-53526	Piping Plan
E-53544	Equipment Layout Section Cell 4

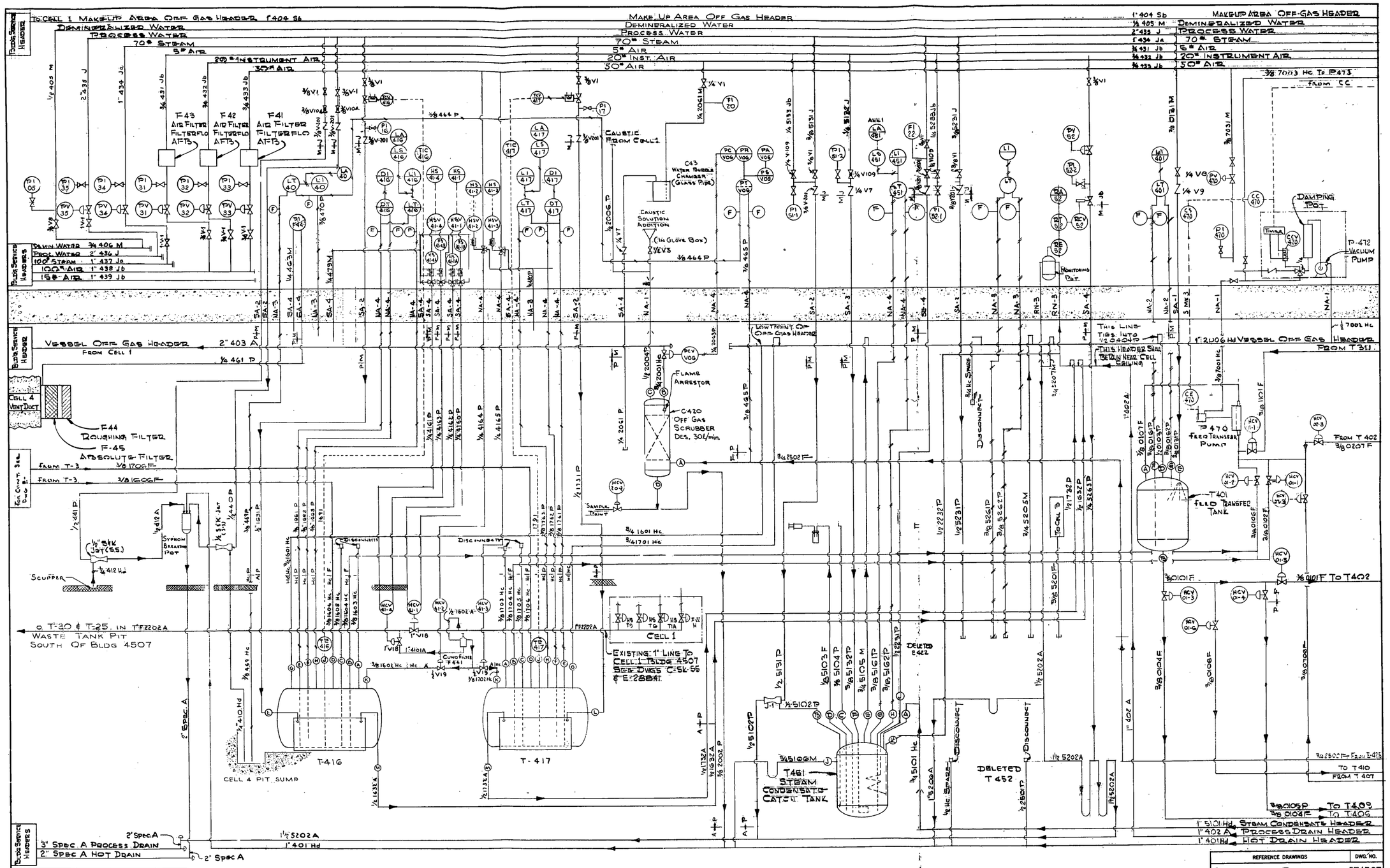

NO.	REVISIONS	DATE	APPD	APPD
A	REVISED TRANSFER PUMP P470, MATERIALS OF CONST. UPGRADED, REMOVED ALL PENTON FROM CELL PIPING, ADDED T-421, PICKER DRAIN, RADIATION DETECTOR AND CELL SUMP.	3/25/62	FLP	
B	REVISED MAT'L OF CONST. FROM POLY TO METAL TUBING IN OPER. AREA PER LETTER CEG TO PLP 2/19/62 ADDED - TANKS T-416 & T-417 DELETED - TANKS T-25 & T-30	3/27/62	FLP	

DRAWN J.N. DAY	DATE 11/17/61	SUBMITTED	DATE	APPROVED	DATE
DESIGNED F.L. PEISKER	DATE 11/24/61	APPROVED	DATE	APPROVED	DATE
CHECKED F.L.P.	DATE	APPROVED	DATE	APPROVED	DATE

NO	REVISIONS	DATE	APPD	APPD
A	REVISED AS CIRCLED AND RUN OFF-GAS FLOW THRU T-403, CHANGE T451-OFF GAS FROM 1" TO 3/4", LINE 5202 FROM 1" TO 1 1/2"	3/17/62	FLP	
B	REVISED SIZE & MATERIAL OF LINE 5106, MANOMETER LI-5152 TO LT-5152.4 LI-5152 ON PANELBOARD. ADDED LI-1 TO T401, ADDED HCV-02-3 & 07-3 TO SUCTION OF P470. ADDED HCV-01-6 TO T401, LINE 3/8 0207F, 3/8 0106F, 3/8 0107F, 1/4 2006 TP. ADDED E-422 LINE NO. 7251, 7252	JWD. 3/18/62	FLP	
C	REVISED PER PIPING DRAWINGS	1/29/62	FLP	

NOTE:
SEE DRAWING E-45805 FOR GENERAL NOTES, SPECIFICATIONS, AND REFERENCE DRAWINGS.

REFERENCE DRAWINGS	DWG. NO.
TRANSURANIUM DEVELOPMENT BLDG. 4507	
CELL 4 AmCm RECOVERY ENGINEERING FLOWSHEET SHEET 1 OF 4	

CLASSIFICATION: NOT CLASSIFIED
LIMITS ON DIMENSIONS UNLESS OTHERWISE SPECIFIED
FRACTIONS: ±
DECIMALS: ±
ANGLES: ±
SCALE: NONE

OAK RIDGE NATIONAL LABORATORY
OPERATED BY
UNION CARBIDE NUCLEAR COMPANY
A DIVISION OF UNION CARBIDE CORPORATION
OAK RIDGE, TENNESSEE

PREPARED: F.L. Peisker
ACCEPTED: R.D. Cuyler, W.E. Cheney
REC'D: E.E. Guthrie

E-45802

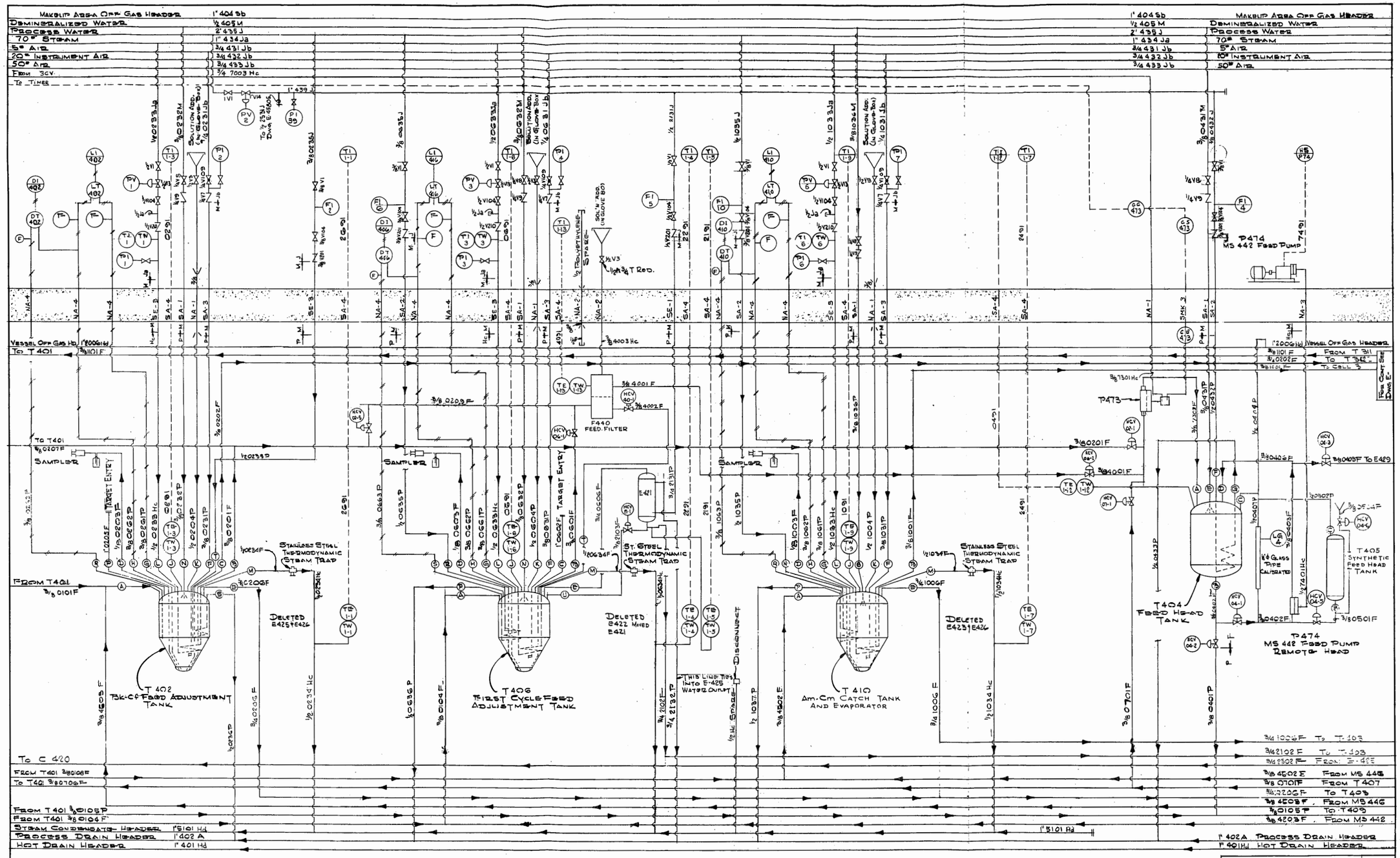

NO.	REVISIONS	DATE	APPD	APPD
B	Added Density Indicators To T401, T406, T410. Added P-474, Revised Feed, Added Remote Feed, Revised Pipe Sizes, Revised Pipe Routing, Revised Pipe Lengths, Revised Materials Of Construction.	5-9-62	FHP	
A	Revised Materials of Construction From Polyethylene To Metal Tubing Operating Area Per Letter C.E.G. To F.L.P.	3-28-62	FHP	
E	Revised Per Piping Drawings	10/16/62	FHP	
D	Revised As Circled And Added Lines ¾ 2502 Hc, ¾ 1001 F, Changed Line 7401 From ¼ To ½"	9/1/62	FHP	
C	Added Line 1036. Deleted E 422, 423, & 426. Revised Line 0233, 0233, & 1033 From Sleeve SE-2 To SE-3. Revised Line 2331 From SE-1 To SE-2. Replaced Manometer LI-2, 6, & 10 With LT-2, 6, & 10 & LI-2, 6 & 10 On Panel Board. Rerouted ¾ 4001 P From Hot Drain To T 406 & Revised Matl. Added Coil In Line 0202 F & 1002 F	4/19/62	FHP	

Drawn J. W. Day	Date 12/8/61
Designed F. L. Prichel	Date 12/7/61
Checked FHP	

Reference Drawings — Dwg. No.

Transuranium Development — Sub. No. 4507

Cell 4

Am Cm Recovery Engineering Flowsheet

Sheet 2 of 4

Classification: Not Classified

Limits on dimensions unless otherwise specified — Fractions: ± — Decimals: ± — Angles: ± — Scale: None

Oak Ridge National Laboratory
Operated by
Union Carbide Nuclear Company
A Division of Union Carbide Corporation
Oak Ridge, Tennessee

Submitted: F. L. Prichel, R. E. Leathers
Approved: R. E. Leathers, W. E. Unger

E-45803 — Rev. E

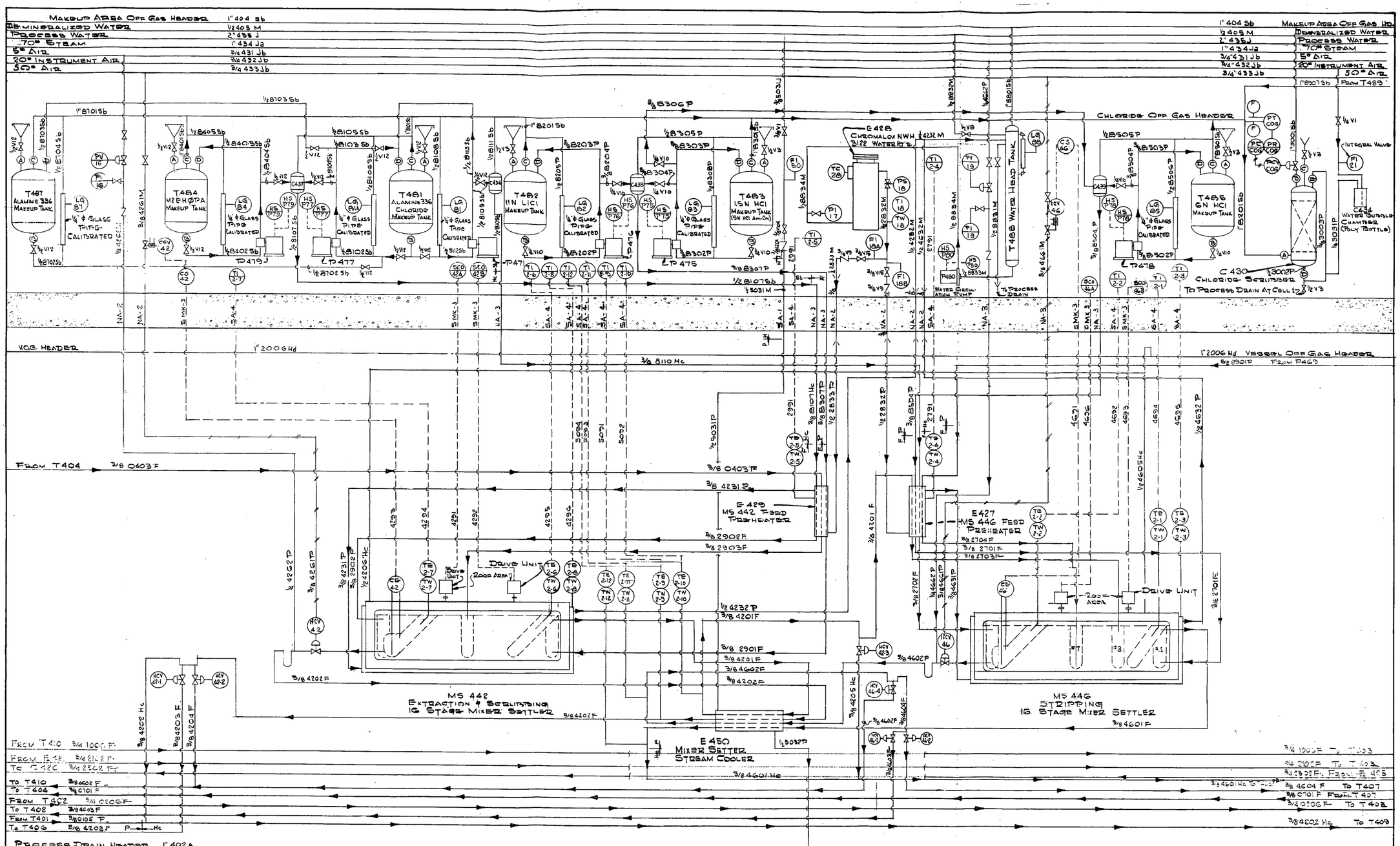

NO.	REVISIONS	DATE	APPD	APPD
B	Replaced Penton Tubing with Penton Pipe in Make Up Area. Revised Upgraded Piping for Process. Removed MS 443 (8 Stage) & Added MS 446 (16 Stage). Added F471, E450, T487. Removed all Penton Piping from Cell 4 & Substituted Tantulum, Hastelloy C or Polyethylene	4-14-61	F.H.P.	W.E.H.
A	Revised Materials of Construction from Polyethylene to Metal Tubing in Oper. Area Per Letter CEG to FLP 2-19-62	2-20-62	F.H.P.	
E	Revised Per Piping Drawings	10/24/62	F.H.P.	
D	Added Lines 3/4 1006 F, 3/4 210 F, 3/4 2502 Hc	9-17-62	F.H.P.	
C	Revised Feed Line to MS 446. Added 3/8 2901 P & 3/8 2704 F	3-13-62	F.H.P.	

DRAWN	DATE	SUBMITTED	DATE	APPROVED	DATE
J.W. Day	10/11/61				
DESIGNED	DATE	APPROVED	DATE	APPROVED	DATE
H.L. Preisler	10/11/61				
CHECKED	DATE	APPROVED	DATE	APPROVED	DATE

REFERENCE DRAWINGS	DWG. NO.
Transuranium Development	Block No. 4507

Cell 4
Am Cm Recovery Engineering Flowsheet
Sheet 3 of 4

CLASSIFICATION: Not Classified — F. H. Pickel

Limits on dimensions unless otherwise specified: Fractions ±; Decimals ±; Angles ±

Scale: None

OAK RIDGE NATIONAL LABORATORY
operated by
UNION CARBIDE NUCLEAR COMPANY
A Division of Union Carbide Corporation
Oak Ridge, Tennessee

Submitted: F. H. Pickel, RCO, C. E. Guthrie
Approved: R. D. Copley
Accepted: Van E. Unger

E-45804 — Rev. E

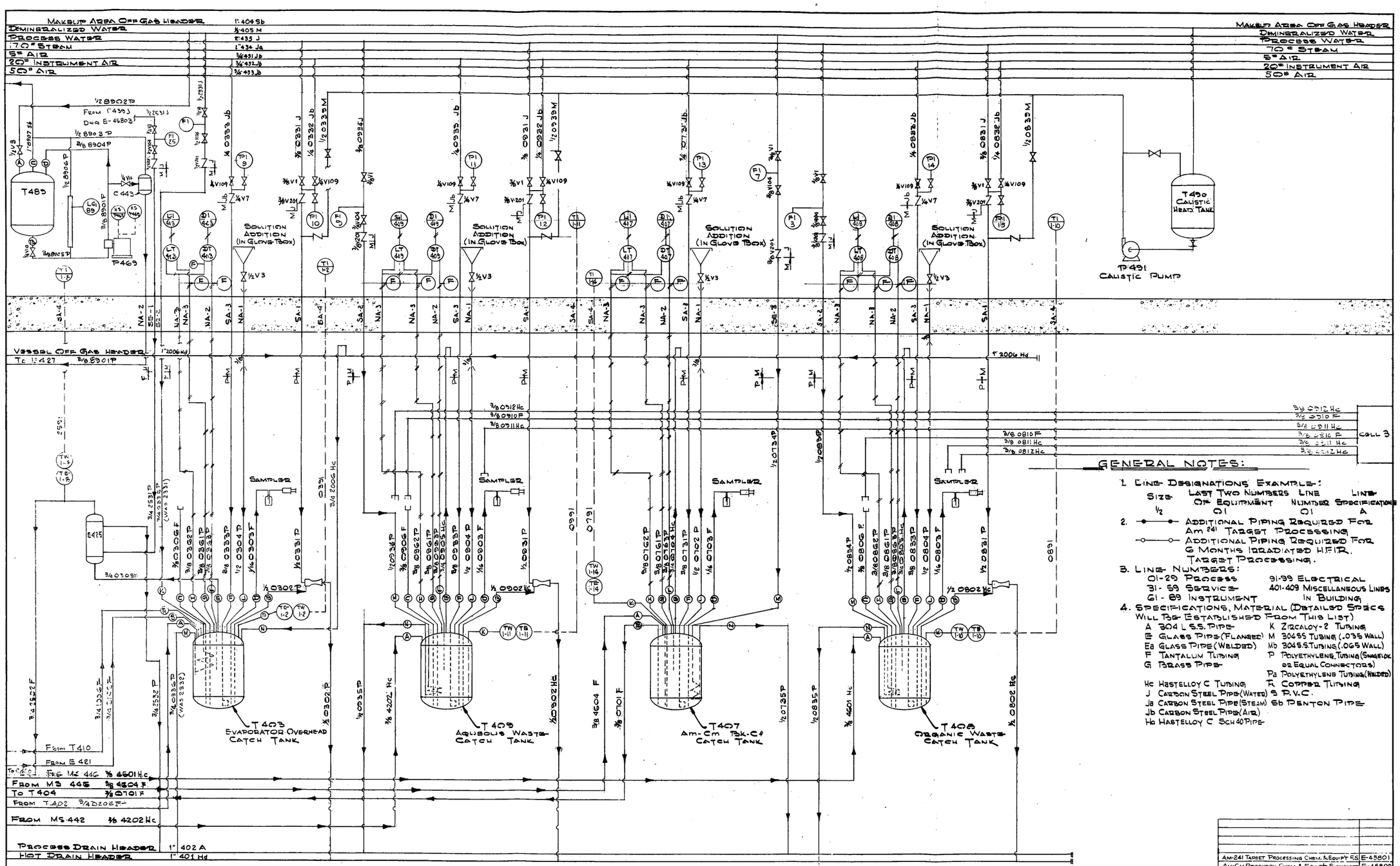

GENERAL NOTES:

1. LINE DESIGNATIONS EXAMPLE:

SIZE	LAST TWO NUMBERS OF EQUIPMENT	LINE NUMBER	LINE SPECIFICATION
1/2	01	01	A

2. —●—●— ADDITIONAL PIPING REQUIRED FOR Am 241 TARGET PROCESSING
   —○—○— ADDITIONAL PIPING REQUIRED FOR 6 MONTHS IRRADIATED H.F.I.R. TARGET PROCESSING.
3. LINE NUMBERS:
   01-29 PROCESS
   31-59 SERVICE
   61-89 INSTRUMENT
   91-99 ELECTRICAL
   401-409 MISCELLANEOUS LINES IN BUILDING
4. SPECIFICATIONS, MATERIAL (DETAILED SPECS WILL BE ESTABLISHED FROM THIS LIST)
   - A 304 L S.S. PIPE
   - E GLASS PIPE (FLANGED)
   - Ea GLASS PIPE (WELDED)
   - F TANTALUM TUBING
   - G BRASS PIPE
   - Hc HASTELLOY C TUBING
   - J CARBON STEEL PIPE (WATER)
   - Ja CARBON STEEL PIPE (STEAM)
   - Jb CARBON STEEL PIPE (AIR)
   - Ho HASTELLOY C SCH 40 PIPE
   - K ZIRCALOY-2 TUBING
   - M 304 S.S. TUBING (.035 WALL)
   - Mb 304 S.S. TUBING (.065 WALL)
   - P POLYETHYLENE TUBING (SWAGELOK OR EQUAL CONNECTORS)
   - Pa POLYETHYLENE TUBING (WELDED)
   - R COPPER TUBING
   - S P.V.C.
   - Sb DENTON PIPE

NO.	REVISIONS	DATE	APPD	APPD
C	ADDED T489, P469. REPLACED LG 3,9,7,18 WITH LI-3,9,7,18. ADDED DI-7,8,9,13, CHL TO T407, 20T369, 20T35P	1/4/62		
B	REMOVED ALL PERTON FROM CELL. ADDED ADDED COOLING COILS T408 & T409, UPGRADED MATERIALS OF CONST.	4/4/61		
A	REVISED MAT'L OF CONST. FROM POLY. TO METAL TUBING IN OPER. AREA PER LETTER CBG TO FLP 2/19/62	3/26/62		

NO.	REVISIONS	DATE	APPD	APPD
E	REVISED PER PIPING DRAWINGS	11/6/62		
D	REVISED AS CIRCLED	9/11/62		

DRAWN	DATE	SUBMITTED	DATE	APPROVED	DATE
J.W. DAY	10/11/61				
DESIGNED	DATE	APPROVED	DATE	APPROVED	DATE
F.L. PRISSEL	10/10/61				
CHECKED	DATE	APPROVED	DATE	APPROVED	DATE

REFERENCE DRAWINGS	DWG. NO.
AM-241 TARGET PROCESSING CHEM. & EQUIPT FS	E-45801
AM-CM RECOVERY CHEM. & EQUIPT. FLOWSHEET	E-45800

TRANSURANIUM DEVELOPMENT BLDG. NO. 4507

CLASSIFICATION: NOT CLASSIFIED

CELL 4
Am Cm RECOVERY ENGINEERING FLOWSHEET
SHEET 4 OF 4

LIMITS ON DIMENSIONS UNLESS OTHERWISE SPECIFIED
FRACTIONS: ±
DECIMALS: ±
ANGLES: ±
SCALE:

OAK RIDGE NATIONAL LABORATORY
OPERATED BY
UNION CARBIDE NUCLEAR COMPANY
A DIVISION OF UNION CARBIDE CORPORATION
OAK RIDGE, TENNESSEE

SUBMITTED: F.L. Prissel
APPROVED: R.E. Blythe
ACCEPTED: W.E. Unger

E-45805

STREAM NO.	1	2	3	4	5	6	7	8	9	10	11	12	13	14	15	16	17	18	19	20	21	22	23	24	25	26	27	28	29	30	31
TITLE	RAW FEED	DIBAN	COND.	ADJ. FEED	SCRUB	ORGANIC	WASTE AQ.	PREG. ORG.	STRIP	SCRUB	WASTE ORG.	PROD. #1	LI CL ADD.	COND.	ADJ. FEED #2	SCRUB	ORGANIC	AQ. WASTE	PREG. ORG.	STRIP	ORG. SCRUB	WASTE ORG.	PRODUCT	COND.								FILTRATE
VOLUME (ℓ)	70	6.4	35	41	20	30	61	30	15	15	45	15	18.3	13.3	20	20	40	40	40	20	20	60	20	20	0.1	0.1	1	0.2	1.3	0.2	1.5
CONC. HNO_3 M	0.55			<0.1	0.01	0.6	<0.05			—	0.4	<0.01									0.6 NO_2	0.2									
CONC. HCl M									2	—	0.2	1.4		1.58	0.02	0.02	0.6	0.02	0.6	8		0.4	8	8	0.1	0.1					
CONC. $LiNO_3$ M	3.2			5.5	7		6.0																								
CONC. LiCl M													12		11	11		11					<0.1								
CONC. $Al(NO_3)_3$ M	0.03			0.52			0.35																								
Am mg/ℓ	36.2			62			<0.1	85			<0.1	170			128			<0.1	64			<0.01	128			25.3 g/ℓ					<5 mg/ℓ
Cm mg/ℓ	15.8			27			<0.1	37			<0.1	74			55			<0.1	27			<0.01	55			11 g/ℓ					734 mg/ℓ
Ce d/m/mℓ	8.5×10^{10}			1.4×10^{11}			$<10^{9}$	1.9×10^{11}			$<10^{9}$	3.8×10^{11}			2.8×10^{11}			1.4×10^{11}	$<10^{7}$				$<2\times10^{7}$								
Ru d/m/mℓ	9.0×10^{9}			1.5×10^{10}			4.1×10^{9}	1.2×10^{10}			8.0×10^{9}	$<10^{7}$			$<7\times10^{6}$			$<10^{6}$	$<3\times10^{6}$			$<2\times10^{6}$	$<10^{4}$								
Zr d/m/mℓ	2.1×10^{7}			3.6×10^{7}			2.4×10^{7}	$<10^{6}$			$<10^{6}$	$<10^{6}$																			
GROSS α c/m/mℓ 50% GEO	5.5×10^{8}		$<10^{6}$	9.4×10^{8}			$<10^{7}$	1.3×10^{9}			$<10^{7}$	2.6×10^{9}		$<10^{6}$	1.9×10^{9}			$<10^{7}$	9.5×10^{8}			$<10^{5}$	1.9×10^{9}			3.8×10^{11}					1.8×10^{10}
GROSS β c/m/mℓ	1.3×10^{9}		$<10^{6}$	2.2×10^{9}			7×10^{7}	2.9×10^{9}			3×10^{8}	5.0×10^{9}		$<10^{6}$	3.7×10^{9}			1.8×10^{9}	$<5\times10^{5}$			$<3\times10^{5}$	$<10^{5}$								
GROSS β c/m/mℓ	1.1×10^{10}		$<10^{7}$	1.9×10^{10}			6×10^{8}	2.5×10^{10}			3×10^{9}	4.2×10^{10}		$<10^{7}$	3.1×10^{10}			1.5×10^{10}	$<5\times10^{6}$			$<3\times10^{6}$	$<10^{5}$								
RAD. LEVEL																															
CONC. AMINE						0.6				0.6							0.6		0.6		0.6	0.6									
MISC.		$Al(OH)_2NO_3$	H_2O																								K_2CO_3	NaOCl	SLURRY	H_2O	
MISC. CONC.		3 M																									3 M	5%			
RARE EARTH xx g/ℓ	1.14			1.95				2.6				5.2			3.9			1.95	$<10^{-3}$												

xx - 7.4×10^{10} Ce^{144} d/m/mℓ = 1 g/ℓ R.E.

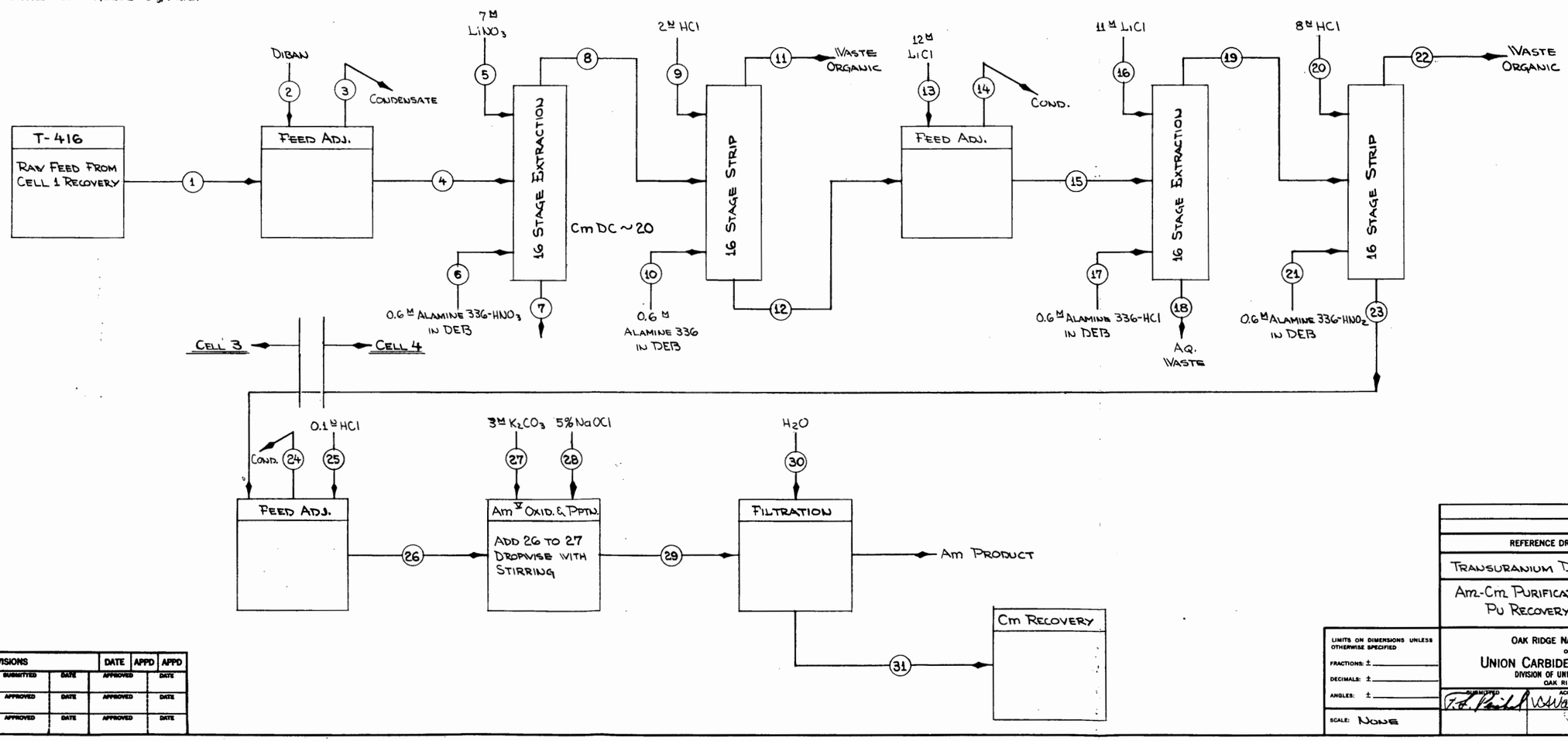

NO.	REVISIONS			DATE	APPD	APPD
DRAWN D.E.D.	DATE 1-23-63	SUBMITTED	DATE	APPROVED	DATE	
DESIGNED	DATE	APPROVED	DATE	APPROVED	DATE	
CHECKED	DATE	APPROVED	DATE	APPROVED	DATE	

REFERENCE DRAWINGS	DWG. NO.
TRANSURANIUM DEVELOPMENT	BLDG. NO. 4507

Am-Cm PURIFICATION FROM CELL 1
PU RECOVERY RAFFINATE No. 1

LIMITS ON DIMENSIONS UNLESS OTHERWISE SPECIFIED
FRACTIONS: ±
DECIMALS: ±
ANGLES: ±
SCALE: NONE

OAK RIDGE NATIONAL LABORATORY
OPERATED BY
UNION CARBIDE NUCLEAR COMPANY
DIVISION OF UNION CARBIDE CORPORATION
OAK RIDGE, TENNESSEE

SUBMITTED: F.H. Pickel
ACCEPTED: W.H. Vaughan
APPROVED: Wm. E. Unger

D-53675

STREAM No.	1	2	3	4	5	6	7	8	9	10	11	12	13	14	15	16	17	18	19	20	21	22	23	24	25	26	27	28	29	30	31
TITLE	RAW FEED	DIBAN	COND.	ADJ. FEED	SCRUB	ORGANIC	WASTE AQ.	PREG. ORG.	STRIP	SCRUB	WASTE ORG.	PROD. #1	LI CL ADD.	COND.	ADJ. FEED #2	SCRUB	ORGANIC	AQ. WASTE	PREG. ORG.	STRIP	ORG. SCRUB	WASTE ORG.	PRODUCT	COND.							FILTRATE
VOLUME (ℓ)	70	7	50	30	15	23	45	23	12	12	35	12	18.3	10.3	20	20	40	40	40	20	20	60	20	20	0.5	0.5	10	2	12.5	1	13.5
CONC. HNO_3 N	0.6			<0.1	0.01	0.6	<0.05	0.6			0.4	<0.01									0.6 NO_2^-	0.2 NO_2^-									
CONC. HCl N									2		0.2	1.4		2.0	0.02	0.02	0.6	0.02	0.6	8		0.4		8	0.1	0.1					
CONC. LiCl M													12		11	11		11													
CONC. $AlCl_3$ M															<0.01																
CONC. $LiNO_3$ M	2.0			4.7	7		5.5																								
CONC. $Al(NO_3)_3$ M	0.03			0.77			0.51																								
Am mg/ℓ	164			382			<0.1	497			<0.1	954			572			<0.1	286			<0.1	572			22.9 g/ℓ					<10
Cm mg/ℓ	103			240			<0.1	312			<0.1	599			359			<0.1	180			<0.1	359			14.4 g/ℓ					530
Ce d/m/mℓ	1.4×10^{11}			3.3×10^{11}			$<10^{9}$	4.3×10^{11}			$<10^{9}$	8.2×10^{11}			4.9×10^{11}			2.5×10^{11}	$<10^{7}$			$<10^{4}$	$<10^{6}$								
RARE EARTH ** g/ℓ	0.87			2.03			<0.01	2.65				5.09			3.05			1.52	$<10^{-3}$												
RU d/m/mℓ	10×10^{10}			2.3×10^{10}			6.1×10^{9}	1.7×10^{10}			1.1×10^{10}	$<10^{7}$																			
ZR d/m/mℓ	4.0×10^{7}			9.3×10^{7}			6.2×10^{7}	$<10^{6}$																							
GROSS α c/m/mℓ	1.6×10^{10}		$<10^{6}$	3.7×10^{10}			$<10^{8}$	4.8×10^{10}			$<10^{8}$	9.2×10^{10}		$<10^{7}$	5.5×10^{10}			$<10^{7}$	2.7×10^{10}			$<10^{7}$	5.5×10^{10}			2.2×10^{12}					7.8×10^{9}
GROSS γ c/m/mℓ	2×10^{9}		$<10^{7}$	4.7×10^{9}			8.3×10^{8}	4.5×10^{9}			1.4×10^{9}	4.5×10^{9}			2.7×10^{9}			1.3×10^{9}	$<10^{5}$			$<10^{5}$	$<10^{6}$								
GROSS β c/m/mℓ	1.5×10^{10}			3.5×10^{10}			10^{10}	2.6×10^{10}			8.2×10^{9}	2.6×10^{10}			1.6×10^{10}			8×10^{9}	$<10^{6}$			$<10^{6}$	$<10^{6}$								
CONC. AMINE						0.6				0.6	0.6						0.6		0.6		0.6	0.6									
MISC.		$Al(OH)_2NO_3$	H_2O																								K_2CO_3	$NaOCl$	SLURRY	H_2O	
MISC. CONC.		3 M																									3 M	5%			
RAD. LEVEL r/ℓ	0.5			1.2			<0.1	1.6			<0.1	3.1			1.9			<0.1	1				1.9			76					2.8

** 1.62×10^{11} Ce^{144} d/m/mℓ = 1 g/ℓ RE.

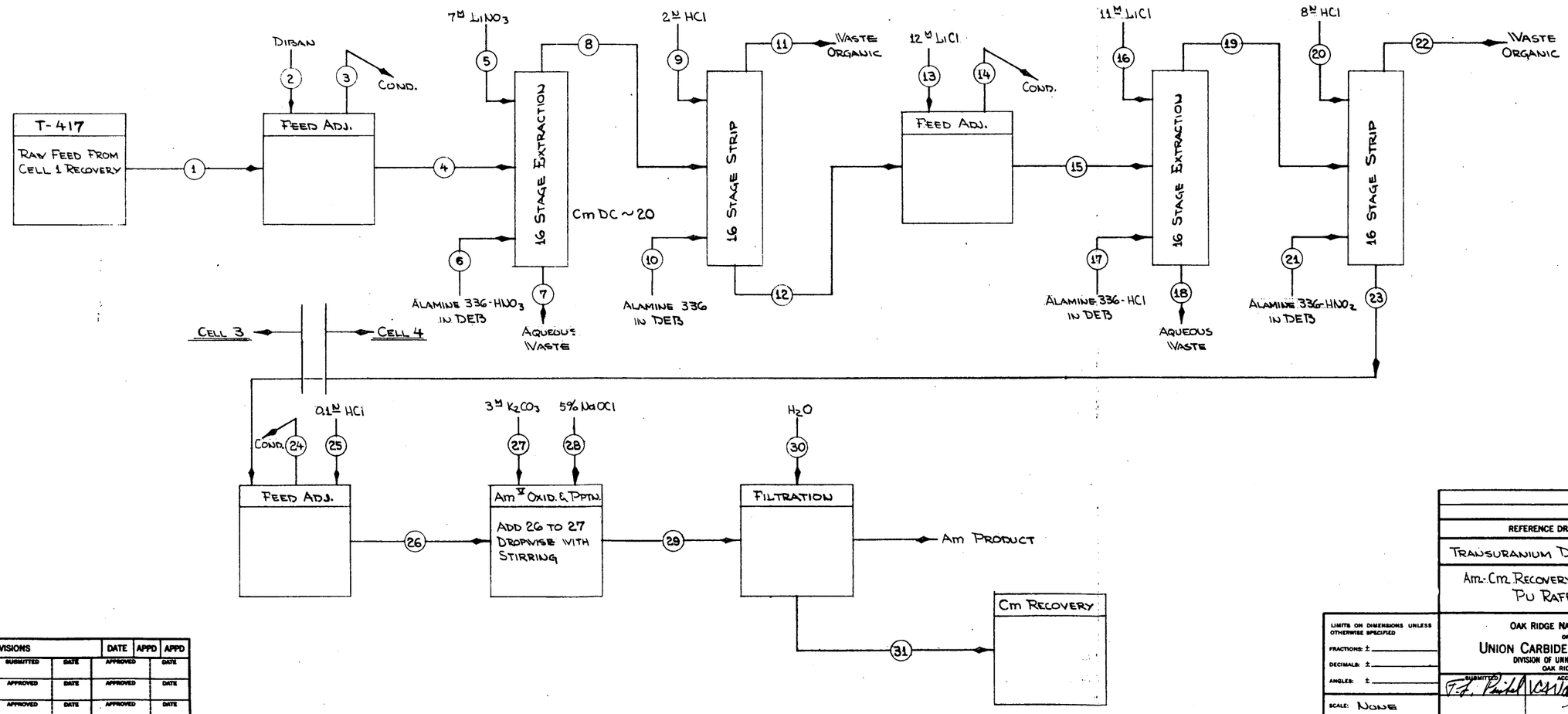

NO.	REVISIONS				DATE	APPD	APPD
DRAWN D.E.D.	DATE 1-23-63	SUBMITTED	DATE	APPROVED		DATE	
DESIGNED	DATE	APPROVED	DATE	APPROVED		DATE	
CHECKED	DATE	APPROVED	DATE	APPROVED		DATE	

REFERENCE DRAWINGS | DWG. NO.

TRANSURANIUM DEVELOPMENT BLDG. NO. 4507

Am-Cm RECOVERY FROM CELL 1 PU RAFFINATE No. 2

LIMITS ON DIMENSIONS UNLESS OTHERWISE SPECIFIED
FRACTIONS: ±
DECIMALS: ±
ANGLES: ±
SCALE: NONE

OAK RIDGE NATIONAL LABORATORY
OPERATED BY
UNION CARBIDE NUCLEAR COMPANY
DIVISION OF UNION CARBIDE CORPORATION
OAK RIDGE, TENNESSEE

SUBMITTED: F. J. Pickel | ACCEPTED: C. H. Vaughan | APPROVED: D. E. Ward

D-53676

Stream	(1)	Norm. to 1 gr. Cm	(2)	(3)	(4)	(5)	(6)	(7)	(8)	(9)	(10)	(11)	(12)	(13)	(14)	(15)	(16)	(17)	(18)	(19)
Title	Rod		Off Gas	Dissolving Soln.	Dissolver Soln.	Li Cl	Condensate	Adj. Feed	Scrub	Extractant	Aq. Waste	Preg. Org.	Strip Soln	Strip Scrub	Waste Org.	Strip Prod.	HNO_3 Add.	Condensate	H_2O Dilution	Product
Vol. (ℓ)	One			10	10	10	8	12	12	24	24	24	12	12	36	12	12	22	2	4
Conc. HNO_3 N														0.6 NO_2^-	0.2 NO_2^-		15.6	7.1		8
Conc. HCL N				2	1.2		1.5	0.02	0.02	0.6	0.02	0.6	8		0.4	8		4.3		
Conc. LiCL M						12		10	11		10.5									
Conc. $AlCl_3$ M					0.20			0.17			0.08									
Am g/ℓ	2.02 g	.81			0.08			0.067			<0.0006	0.034			<0.001	0.067				0.2
Cm g/ℓ	2.5 g	1.0			0.10			0.083			<0.0008	0.042			<0.001	0.083				0.25
Pu g/ℓ	1.1 g	0.44			0.04			0.037			<0.0003	0.018			0.012	<0.001				< 0.01
RE d/m/mℓ	2.0×10^{15} d/m	8.0×10^{14}			8.0×10^{10}			6.7×10^{10}			3.3×10^{10}	$< 3\times10^{6}$			$< 10^{3}$	$< 6\times10^{6}$				
Ru d/m/mℓ	8.8×10^{14} d/m	3.5×10^{14}			3.5×10^{10}		$< 10^{8}$	2.9×10^{10}			1.5×10^{9}	1.3×10^{10}			8.6×10^{9}	$< 3\times10^{6}$				
Zr d/m/mℓ	4.2×10^{14} d/m	1.7×10^{14}			1.7×10^{10}			1.4×10^{10}			3.6×10^{9}	3.4×10^{9}			2.3×10^{9}	$< 10^{6}$				
Gross α d/m/mℓ	1.85×10^{15} d/m	7.4×10^{14}			7.4×10^{11}		$< 10^{8}$	6.2×10^{11}			$< 3\times10^{9}$	3.1×10^{11}			* 3.7×10^{9}	6.2×10^{11}		$< 10^{8}$		1.86×10^{12}
Gross γ d/m/mℓ	10^{15} d/m	4.0×10^{14}			4.0×10^{10}			3.3×10^{10}			10^{10}	6×10^{9}			4×10^{9}	** 6.4×10^{4}				** 1.9×10^{5}
Gross β d/m/mℓ	5×10^{15} d/m	2.0×10^{15}			2.0×10^{11}			1.7×10^{11}			5×10^{10}	3.3×10^{10}			2.2×10^{10}	** 8×10^{5}				2.4×10^{6}
Rad. Level w/ℓ	300 Watts	120			12			10			<1	5			<1	10				30
Misc.	135 gr Al	54 gr Al	~90 ℓ H_2 (STP)	60° C																

Initial Gr. Am 241 ~40% Conv. ← Figures Normalized to 1 gr. Cm 242

* Pu^{238} ** Ag^{111} $T_{1/2}$ = 7.5 Days

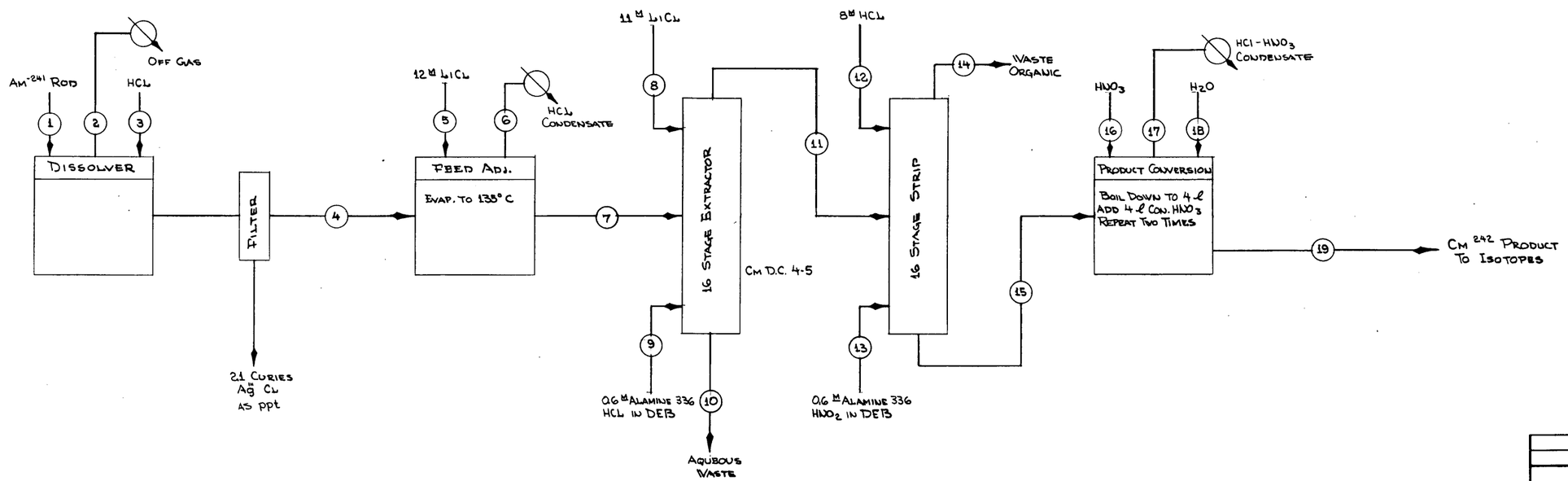

NO.	REVISIONS			DATE	APPD	APPD
DRAWN D.E.D.	DATE 1-22-63	SUBMITTED	DATE	APPROVED		DATE
DESIGNED	DATE	APPROVED	DATE	APPROVED		DATE
CHECKED	DATE	APPROVED	DATE	APPROVED		DATE

REFERENCE DRAWINGS	DWG. NO.
Transuranium Development	BLDG NO. 4507

Cm 242 Solvent Extraction Flowsheet

LIMITS ON DIMENSIONS UNLESS OTHERWISE SPECIFIED
FRACTIONS: ±
DECIMALS: ±
ANGLES: ±
SCALE: None

OAK RIDGE NATIONAL LABORATORY
OPERATED BY
UNION CARBIDE NUCLEAR COMPANY
DIVISION OF UNION CARBIDE CORPORATION
OAK RIDGE, TENNESSEE

SUBMITTED: T. F. Lombard
ACCEPTED: W. S. Vaughan
APPROVED: Wm. E. Unger

D-53677 REV

STREAM	1	2	3	4	5	6	7	8	9	10	11	○	12	13	14	15	16	17	18	19	20	21	22
TITLE	FEED	CONDENSATE	HCl MAKE-UP	ADJUSTED FEED #1	SCRUB	EXTRACTANT	WASTE ORGANIC	CHLORIDE FEED	LiOH ADD'N.	LiCl ADD'N.	CONDENS.		ADJUSTED FEED #2	SCRUB	EXTRACTANT	AQUEOUS WASTE	PREGNANT ORGANIC	SCRUB	STRIP	WASTE ORGANIC	STRIPPED PRODUCT	CONDENSATE	PRODUCT
WEIGHT																							
VOLUME LITERS	400	350	350	400	100	1000	1000	500	200	375	575		500	500	1000	1000	1000	250	250	1250	250	215	35
SP GR	1.17	1.12	1.06	1.1	1.06	0.90	0.90	1.07	1.12	1.264	1.010		1.240	1.240	0.90	1.240	0.90	0.90	1.13	0.90	1.13	1.12	1.16
CONC. HNO_3 N	2-4	2-4		<1			<0.4	<0.001										0.6 M NO_2^-		0.12 NO_2^-			
CONC. HCl N			3.4	3	3	0.6	>0.2	2.4			0.35		0.02	0.02	0.6	0.02	0.6		8.0	0.48	8.0	7.7	10.0
CONC. LiOH N									5														
CONC. LiCl N										12	<0.1		11	11		11							
CONC. Am g/l	0.37	$<10^{-3}$		0.37			$<10^{-3}$	0.30			$<10^{-3}$		0.30			$<10^{-3}$	0.15			$<10^{-3}$	0.60	$<10^{-3}$	4.28
CONC. Cm g/l	0.55	$<10^{-3}$		0.55			$<10^{-3}$	0.44			$<10^{-3}$		0.44			$<10^{-3}$	0.22			$<10^{-3}$	0.88	$<10^{-3}$	6.28
CONC. RE g/l	25	$<10^{-2}$		25			$<10^{-3}$	20			$<10^{-2}$		20			10	$<10^{-2}$			$<10^{-3}$	$<10^{-3}$		$<10^{-1}$
RAD. LEVEL r/l	7.5			7.5			<0.1	6			<0.01		6			<5	1			<0.1	4	<0.01	28.5
ALAMINE 336 IN DEB M						0.6	0.6								0.6		0.6	0.6		0.6			
GROSS α d/m/ml 51% GEOM.	7.0×10^{10}	$<10^{7}$		7.0×10^{10}			$<10^{8}$	5.6×10^{10}			$<10^{7}$		5.6×10^{10}			$<1\times10^{8}$	2.8×10^{10}			$<1\times10^{8}$	1×10^{11}	$<10^{7}$	7.1×10^{11}
GROSS β d/m/ml 10% GEOM.	2.0×10^{10}	$<10^{7}$		2.0×10^{10}			$<10^{9}$	1.5×10^{10}			$<10^{7}$		1.5×10^{10}			7×10^{9}	$<1\times10^{9}$			$<1\times10^{9}$	$<1\times10^{8}$	$<10^{5}$	$<1\times10^{9}$
GROSS γ	1.5×10^{10}	$<10^{7}$		1.5×10^{10}			$<10^{9}$	1.0×10^{10}					1×10^{10}			5×10^{9}	$<10^{9}$			$<10^{9}$	$<10^{8}$	$<10^{5}$	
MISC. CONTAMINANT Fe g/l	<0.2			<0.2				<0.16			<0.001		<0.16				<0.08			<0.06			
" " $SO_4^=$ M	<0.01			<0.01				<0.01			<0.001		<0.01			<0.005							
" " Al g/l	<0.1			<0.1				<0.08			<0.001		<0.08			<0.04							

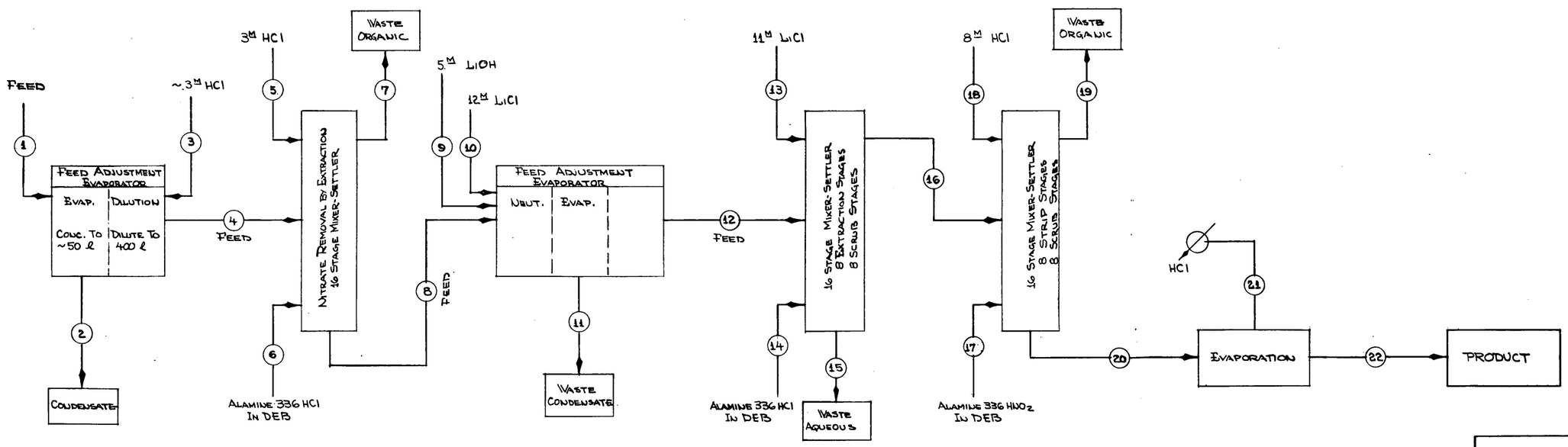

NO.	REVISIONS			DATE	APPD	APPD
DRAWN D.E.D.	DATE 1-22-63	SUBMITTED	DATE	APPROVED		DATE
DESIGNED	DATE	APPROVED	DATE	APPROVED		DATE
CHECKED	DATE	APPROVED	DATE	APPROVED		DATE

REFERENCE DRAWINGS	DWG. NO.
TRANSURANIUM DEVELOPMENT	BLDG. NO. 4507

SOLVENT EXTRACTION RECOVERY OF Am & Cm

LIMITS ON DIMENSIONS UNLESS OTHERWISE SPECIFIED
FRACTIONS: ±
DECIMALS: ±
ANGLES: ±
SCALE: NONE

OAK RIDGE NATIONAL LABORATORY
OPERATED BY
UNION CARBIDE NUCLEAR COMPANY
DIVISION OF UNION CARBIDE CORPORATION
OAK RIDGE, TENNESSEE

SUBMITTED: F. J. Vanell
ACCEPTED: C. A. Vaughan
APPROVED: Kenneth E. Vergara

D-53678 REV.

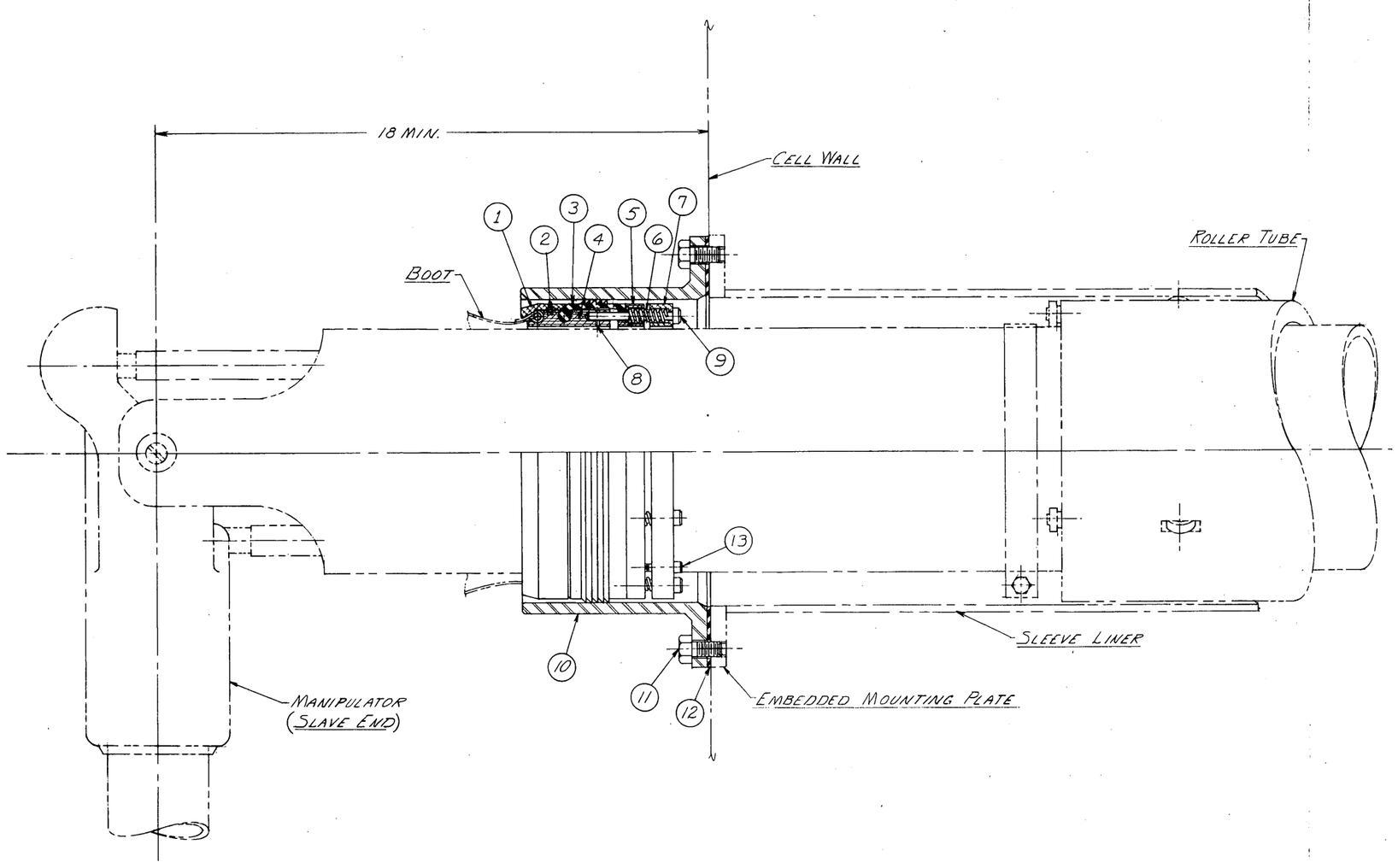

PARTS LIST

PART NO.	DWG. NO.	NO. REQD	DESCRIPTION (NAME, SIZE, ETC.)	MATERIAL
1	D-53665	1	SEAL RING	6061-T6 AL
2	D-53665	1	CLIP	SPRING STL
3	D-53665	1	SEAL NEOPRENE 40-50 DUROMETER	
4 1	D-53665	1	RING	BAKELITE
5 1	D-53665	1	RING	BAKELITE
6	D-53666	6	COMPRESSION SPRING	MUSIC WIRE
7	D-53665	1	RING	6061-T6 AL
8 2	STOCK	6	1/16 DIA ROLL PIN X 1/2 LG	STL
9	D-53666	6	PIN	SST
10	D-53666	1	SLEEVE EXTENSION SST AMERCOATED & HASTELLOY "C"	
11	STOCK	8	1/2-13NC-2 HEX HD SCREW X 1" LG	STL
12	D-53666	1	GASKET	NEOPRENE
13	STOCK	3	1/4-20NC-2 SOC HD CAP SCREW X 2 1/2 LG	STL

REMARKS:
1. MATERIAL TO BE PHENOLIC MOLDING COMPOUND "F".
2. DRILL AND PIN AT ASSEMBLY.

REFERENCE DRAWINGS	DWG. NO.
MANIPULATOR BOOT SHOULDER SEAL DETAIL SH 2	D-53666
MANIPULATOR BOOT SHOULDER SEAL DETAIL SH 1	D-53665

TRU. DEVELOPMENT — BLDG. NO. 4507

MANIPULATOR BOOT SHOULDER SEAL ASSEMBLY

GENERAL SPECIFICATIONS:
1. Break all sharp edges 1/64 max., unless otherwise specified.
2. The fabricator may choose the type, grade or finish of material unless otherwise specified.

MACHINE FINISH SPECIFICATIONS:
1. Finish symbols are in accordance with ASA Standard B46.1-1955.
2. Roughness height values are the maximum arithmetical average deviation from the mean surface, expressed in microinches.
3. For surfaces not otherwise indicated, roughness height shall not exceed √.

CLASSIFICATION

LIMITS ON DIMENSIONS UNLESS OTHERWISE SPECIFIED
FRACTIONS: ±
DECIMALS: ±
ANGLES: ±
SCALE: 1/2 = 1

OAK RIDGE NATIONAL LABORATORY
OPERATED BY
UNION CARBIDE NUCLEAR COMPANY
DIVISION OF UNION CARBIDE CORPORATION
OAK RIDGE, TENNESSEE

SUBMITTED	ACCEPTED	APPROVED	
K E Jameson	Wm. E. Unger	[illegible]	
R A Schmidt	F L PEISHEL	D-53664	REV

LTR	REVISIONS	DATE	APPD	APPD

DRAWN	DATE	CHECKED	DATE	APPROVED	DATE
B.E. GIBSON	11-20-62	EES	11-23-62	J. D. Howell	11-29-62
DESIGNED	DATE	SUBMITTED	DATE	APPROVED	DATE
		PATE	11-27-62		

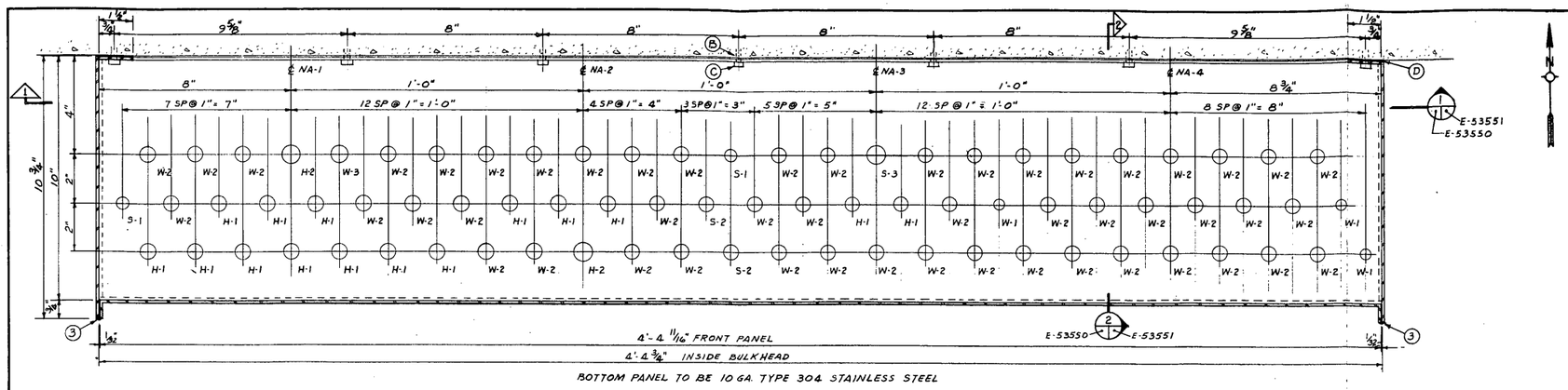

PLAN OF BULKHEAD #1

HALF SIZE

EQUIPMENT LIST

- (A) CROUSE-HINDS TYPE EYS7 SEALING CONDULET, STAINLESS STEEL.
- (B) SELF-DRILLING PHILLIPS TYPE ANCHOR SHELL FOR 3/8" ϕ BOLT, OR EQUAL.
- (C) 3/8" ϕ x 1 1/4" LG. MACHINE SCREW, HEX HEAD.
- (D) 1 1/2" WIDE x 1/16" THICK NEOPRENE GASKET.
- (E) BUSHING FOR 2 1/2" CONDUIT, STAINLESS STEEL.
- (F) 2 1/2" SCH 40 PIPE CONDUIT, STAINLESS STEEL.

MARK NO.	BULKHEAD HOLE DIA.	FITTINGS SIZE	DESCRIPTION	MATERIAL
W-1	7/16	1/4"	REDUCER	STAINLESS STEEL
W-2	9/16"	3/8"	"	" "
W-3	11/16"	1/2"	"	" "
H-1	37/64"	3/8"	BULK HEAD UNION	HASTELLOY
H-2	43/64"	1/2"	" "	"
S-1	29/64"	1/4"	BULK HEAD UNION	STAINLESS STEEL
S-2	37/64	3/8"	" "	" "
S-3	43/64	1/2"	" "	" "
T-1	2 15/16"	THERMOCOUPLE SLEEVE, SEE DETAIL		

NOTES

1. FABRICATE BULKHEADS FROM 14 GA. TYPE 304 STAINLESS STEEL, UNLESS OTHERWISE NOTED.
2. ALL JOINTS TO BE CONTINUOUS WELDED FOR AN AIR TIGHT SEAL.
3. FRONT & SIDE PANELS TO BE WELDED ON IN THE FIELD AFTER ALL EQUIPMENT HAS BEEN INSTALLED INSIDE THE BULKHEAD.
4. PAINT EXTERIOR OF BULKHEADS WITH AMERCOAT #74 SYSTEM AFTER FINAL WELDING. COVE ALL WALL TO BULKHEAD CORNERS & JOINTS WITH EPOXY FIBERGLAS PUTTY.
5. RELOCATE PRESENT LIGHTS AS REQUIRED TO MISS BULKHEADS #2 & #3.

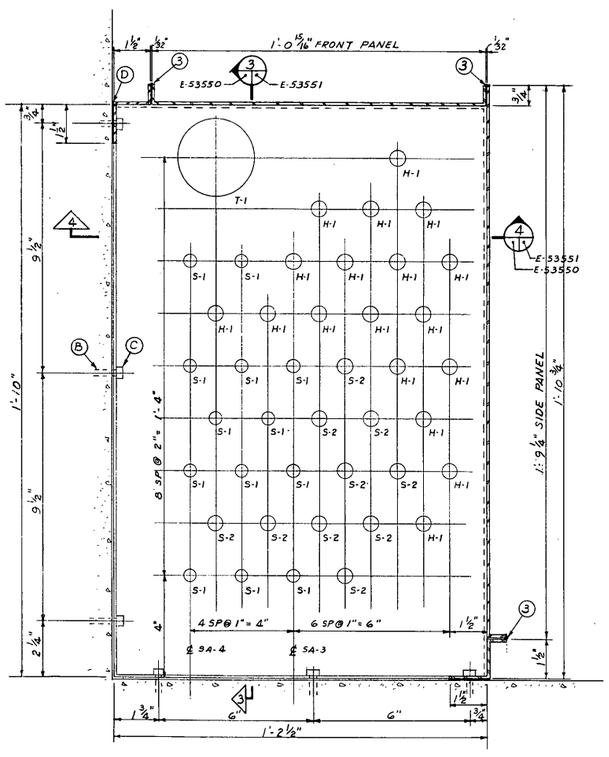

PLAN OF BULKHEAD #2

HALF SIZE

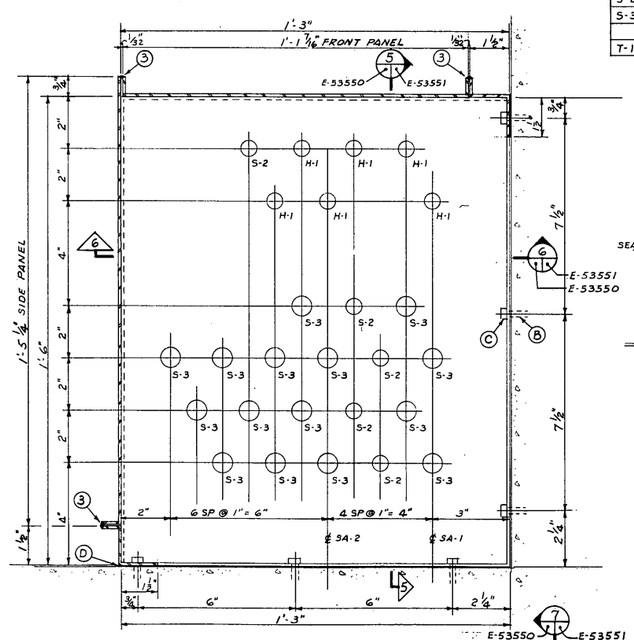

PLAN OF BULKHEAD #3

HALF SIZE

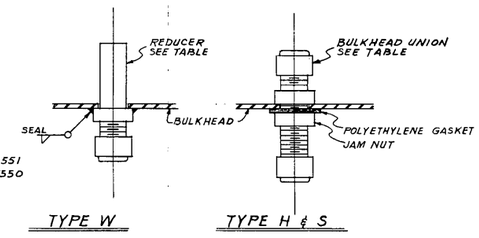

TYPE W

TYPE H & S

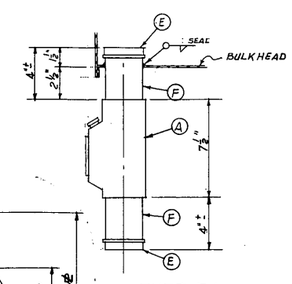

TYPE T-1

3" = 1'-0"

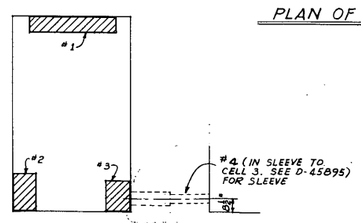

REFLECTED CEILING PLAN OF CELL 4 SHOWING BULKHEADS

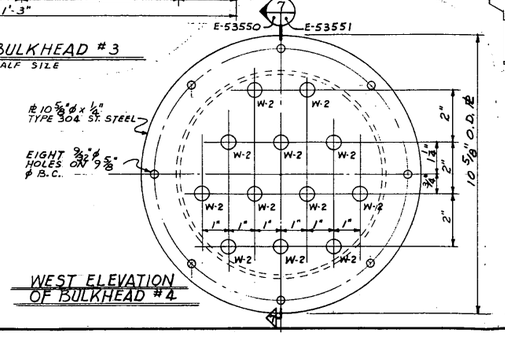

WEST ELEVATION OF BULKHEAD #4

NO.	REVISIONS	DATE	APPD	APPD
B	ADDED BULKHEAD # 4	11-25-68		
A	ADDED FITTINGS, BULKHEAD # 1	9-28-62		

DRAWN	DATE	SUBMITTED	DATE	APPROVED	DATE
Jay ORGDP	7-17-62	J. Lin Martin	9/28/62		
DESIGNED BY	DATE	APPROVED	DATE	APPROVED	DATE
Jay ORGDP	7-17-62				
CHECKED BY	DATE	APPROVED	DATE	APPROVED	DATE
L. Lindell ORGDP	7-17-62				

NUMBER OF SECTION OR DETAIL

DRAWING ON WHICH SECTION OR DETAIL IS SHOWN

DRAWING ON WHICH SECTION OR DETAIL IS SHOWN

SECTION & DETAIL KEY

Whenever a manufacturer's name or catalog number is indicated on the drawings, an approved equal may be substituted unless otherwise stated.

BULKHEADS, SECTIONS & DETAILS	E-53551
REFERENCE DRAWINGS	DWG. NO.

TRANSURANIUM DEVELOPMENT — PLANT NO. 4507

BULKHEADS, PLAN & DETAILS

CELL #4

CLASSIFICATION: Not Classified

LIMITS ON DIMENSIONS UNLESS OTHERWISE SPECIFIED

FRACTIONAL ± ____

DECIMALS ± ____

ANGLES ± ____

SCALE NOTED

OAK RIDGE NATIONAL LABORATORY
OPERATED BY
UNION CARBIDE NUCLEAR COMPANY
DIVISION OF UNION CARBIDE CORPORATION
OAK RIDGE, TENNESSEE

DESIGNED F. H. Pardee — CHECKED R. D. Bagley — APPROVED W. E. Unger

E-53550 — REV. B

PARTS LIST				
PART NO.	DWG. NO.	NO. REQD	DESCRIPTION (NAME, SIZE, ETC.)	MATERIAL

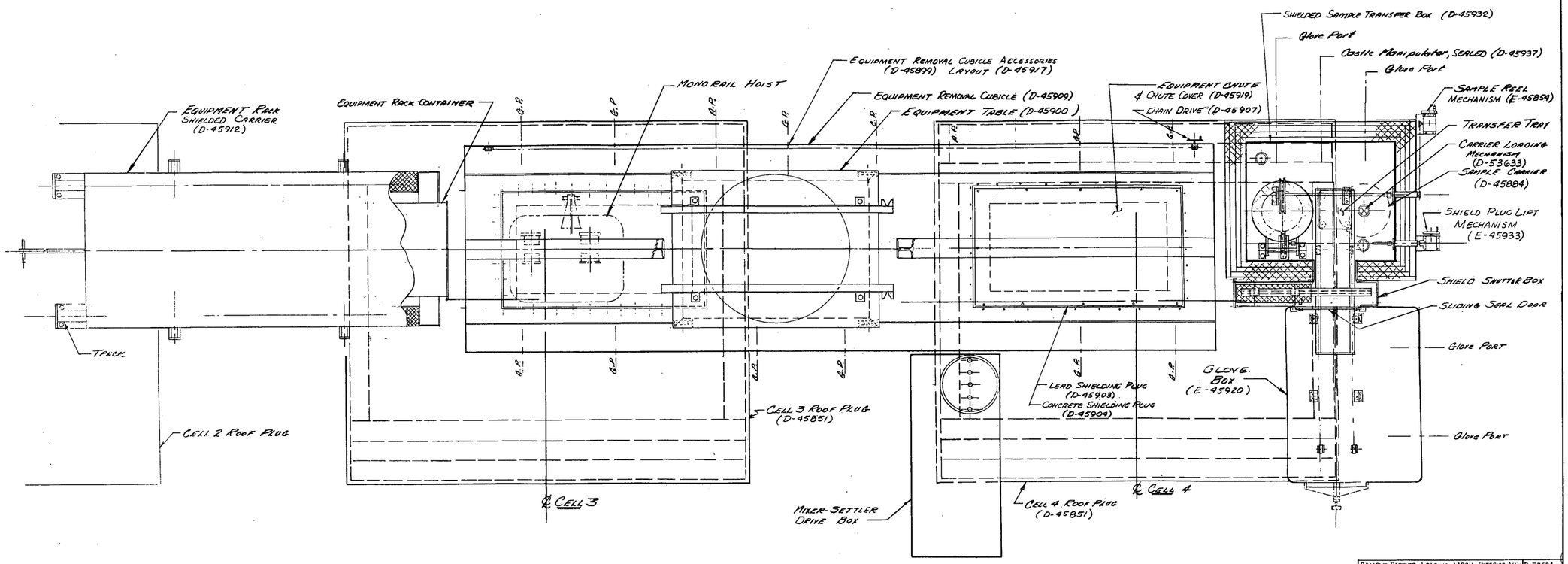

Penthouse Area Layout
Transuranium Development

Sample Carrier Loading Mech. Exterior Ass'y	D-53634
Sample Carrier Loading Mech. Interior Ass'y	D-53633
De-Canner Ass'y	D-53631
Sample Transfer Box. Ass'y	D-45932
Cell 3 & 4 Roof Plugs, Plans & Sections	D-45851
Sample Transfer Box & Sample Carrier Support	D-45940
Sample & Small Equip Penetrations, Ass'y & Details	D-45925
Sealed Castle Manipulator	D-45937
Glove Box	E-45920
Equipment Chute & Chute Cover	D-45919
Equipment Removal Cubicle Layout	D-45917
Equipment Rack Shielded Carrier	D-45912
Chain Drive, Ass'y & Elev.	D-45907
Plug Lifting Tool	D-45905
Concrete Shielding Plug	D-45904
Lead Shielding Plug	D-45903
Equipment Table, Ass'y & Det.	D-45900
Equipment Removal Cubicle, Ass'y & Det.	D-45909
Equipment Removal Cubicle Accessories	D-45899
Aux. Sample Carrier, Details & Ass'y	D-53648
Sample Carrier Ass'y	D-45884
Sample Reel Mechanism, Ass'y & Sections	E-45854
Drawing List	D-45880
Reference Drawings	**Dwg. No.**
TRU Development - Cell 4	Bldg. No. 4507

Enclosures & Equipment
Above Cells 3 & 4

LTR	Revisions	Date	Appd	Appd

Drawn	Date	Submitted	Date	Approved	Date
Wiskin	7-16-62	H. Dowell	11-12-62		
Designed	Date	Approved	Date	Approved	Date
Checked	Date	Approved	Date	Approved	Date
Hewell	11-12-62			W. Duggan	12-12-62

Limits on dimensions unless otherwise specified:
Fractions: ±
Decimals: ±
Angles: ±
Scale: 1/4" = 1'-0"

General Specifications
Unless Otherwise Specified:
1. Break all sharp edges 1/64 max.
2. Type, grade, or finish of material may be chosen by fabricator.
3. Roughness height of machined surfaces shall not exceed ✓
(Finish symbols and height values are in accordance with ASA B46.1-1955.)

Oak Ridge National Laboratory
Operated by
Union Carbide Nuclear Company
Division of Union Carbide Corporation
Oak Ridge, Tennessee

Submitted: K. Jamison
Approved: Wm. E. Unger
Approved: Fabricated
Rev

E 53650

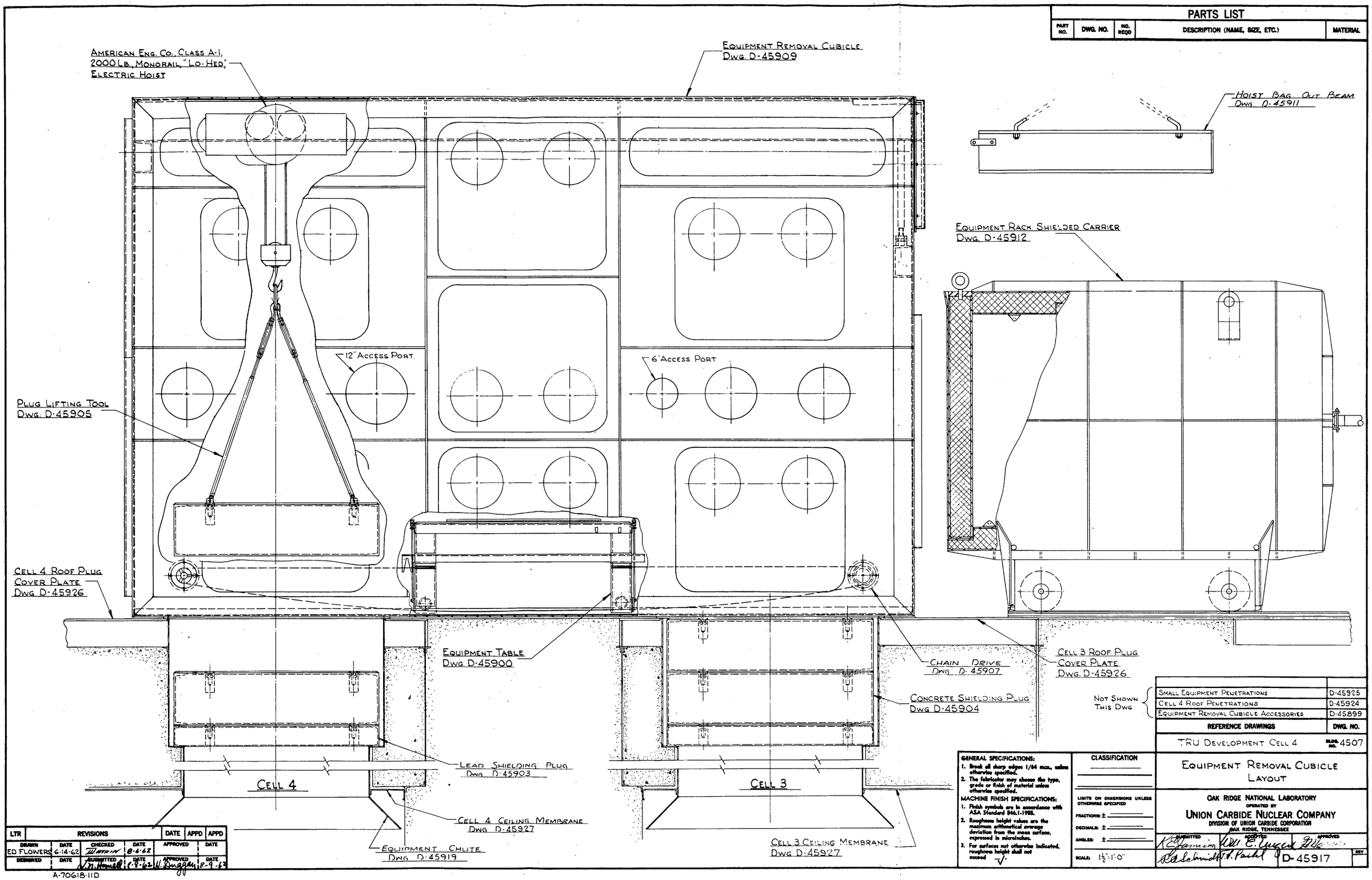

PARTS LIST
PART NO.
DWG. NO.
NO. REQD
DESCRIPTION (NAME, SIZE, ETC.)
MATERIAL
AMERICAN ENG. CO., CLASS A-1, 2000 LB., MONORAIL, "LO-HED," ELECTRIC HOIST
EQUIPMENT REMOVAL CUBICLE DWG. D-45909
HOIST BAG OUT BEAM DWG. D-45911
EQUIPMENT RACK SHIELDED CARRIER DWG. D-45912
12" ACCESS PORT
6" ACCESS PORT
PLUG LIFTING TOOL DWG. D-45905
CELL 4 ROOF PLUG COVER PLATE DWG. D-45926
EQUIPMENT TABLE DWG. D-45900
CHAIN DRIVE DWG. D-45907
CELL 3 ROOF PLUG COVER PLATE DWG. D-45926
CONCRETE SHIELDING PLUG DWG. D-45904
NOT SHOWN THIS DWG
SMALL EQUIPMENT PENETRATIONS D-45925
CELL 4 ROOF PENETRATIONS D-45924
EQUIPMENT REMOVAL CUBICLE ACCESSORIES D-45899
REFERENCE DRAWINGS
DWG. NO.
TRU DEVELOPMENT CELL 4
BLDG. NO. 4507
LEAD SHIELDING PLUG DWG. D-45903
CELL 4
CELL 3
CELL 4 CEILING MEMBRANE DWG. D-45927
EQUIPMENT CHUTE DWG. D-45919
CELL 3 CEILING MEMBRANE DWG. D-45927
GENERAL SPECIFICATIONS:
1. Break all sharp edges 1/64 max., unless otherwise specified.
2. The fabricator may choose the type, grade or finish of material unless otherwise specified.
MACHINE FINISH SPECIFICATIONS:
1. Finish symbols are in accordance with ASA Standard B46.1-1955.
2. Roughness height values are the maximum arithmetical average deviation from the mean surface, expressed in microinches.
3. For surfaces not otherwise indicated, roughness height shall not exceed √.
CLASSIFICATION
LIMITS ON DIMENSIONS UNLESS OTHERWISE SPECIFIED
FRACTIONS: ±
DECIMALS: ±
ANGLES: ±
SCALE: 1½"=1'-0"
EQUIPMENT REMOVAL CUBICLE LAYOUT
OAK RIDGE NATIONAL LABORATORY
OPERATED BY
UNION CARBIDE NUCLEAR COMPANY
DIVISION OF UNION CARBIDE CORPORATION
OAK RIDGE, TENNESSEE
SUBMITTED
ACCEPTED
APPROVED
D-45917
REV
LTR
REVISIONS
DATE
APPD
APPD
DRAWN ED FLOWERS
DATE 6-14-62
CHECKED
DATE 8-6-62
APPROVED
DATE
DESIGNED
DATE
SUBMITTED
DATE 8-8-62
APPROVED
DATE 8-9-62
A-70618-11D

PARTS LIST				
PART NO.	DWG. NO.	NO. REQD	DESCRIPTION (NAME, SIZE, ETC.)	MATERIAL

LTR	REVISIONS			DATE	APP'D	APP'D
DRAWN C.E. HOBSON	DATE 3-11-63	SUBMITTED K. H. Howell	DATE 3-19-63	APPROVED		DATE
DESIGNED	DATE	APPROVED	DATE	APPROVED		DATE
CHECKED K. H. Howell	DATE 3-19-63	APPROVED	DATE	APPROVED W. Duggan		DATE 3-20-63

A-70619-11D

DRAWING INDEX	D-45850
REFERENCE DRAWINGS	DWG. NO.
TRU DEVELOPMENT CELL 4	BLDG. NO. 4507

SAMPLE TRANSFER SYSTEM LAYOUT

OAK RIDGE NATIONAL LABORATORY
OPERATED BY
UNION CARBIDE NUCLEAR COMPANY
DIVISION OF UNION CARBIDE CORPORATION
OAK RIDGE, TENNESSEE

SUBMITTED K. H. Howell — SUBMITTED W. Duggan — APPROVED F. Paulus

E-53653 REV

LIMITS OR DIMENSIONS UNLESS OTHERWISE SPECIFIED
FRACTIONS ± ___
DECIMALS ± ___
ANGLES ± ___
SCALE: 1/4 = 1

GENERAL SPECIFICATIONS
Unless Otherwise Specified:
1. Break all sharp edges 1/64 max.
2. Type, grade, or finish of material may be chosen by fabricator.
3. Roughness height of machined surfaces shall not exceed √.
(Finish symbols and height values are in accordance with ASA B46.1-1955.)

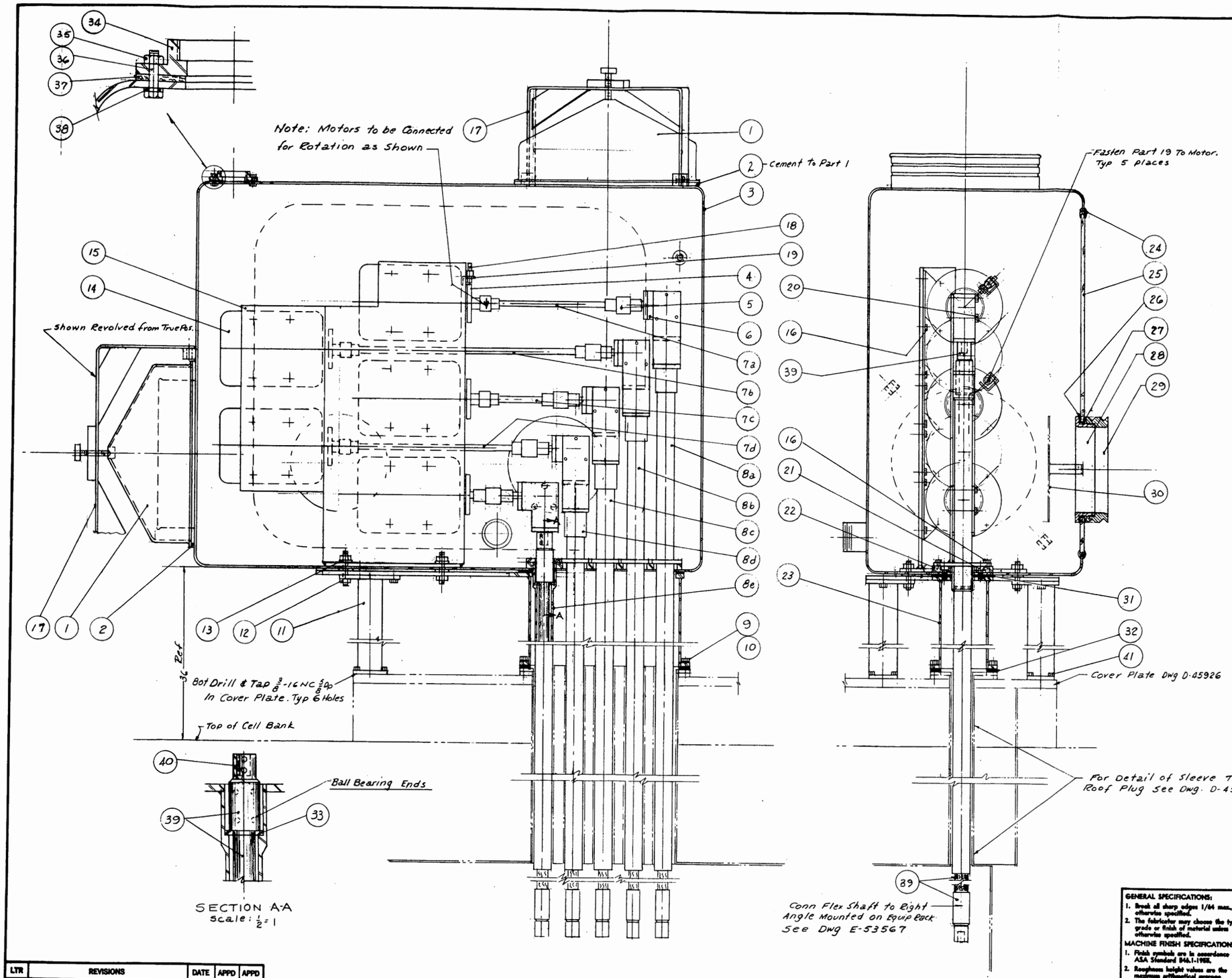

PARTS LIST

PART NO.	DWG. NO.	NO. REQD	DESCRIPTION (NAME, SIZE, ETC.)	MATERIAL
1	D-45824	2	Port Cover	"Al"
2	This Dwg	2	Cover gasket 14 OD x 13 ID x 1/8 thk	Neoprene
3	D-45821	1	Dry box	Steel
4_1	Stock	5	Gear	Iron
5_1	Stock	9	Coupling	Steel
6_2	Stock	5	90° Gear box	Steel
7a	Stock	1	Shaft 1/2 dia x 9 23/32	Steel
7b	Stock	1	Shaft 1/2 dia x 18 23/32	Steel
7c	Stock	1	Shaft 1/2 dia x 4 23/32	Steel
7d	Stock	1	Shaft 1/2 dia x 13 23/32	Steel
8a	D-45822	1	Shaft housing	SSt
8b	D-45822	1	Shaft housing	SSt
8c	D-45822	1	Shaft housing	SSt
8d	D-45822	1	Shaft housing	SSt
8e	D-45822	1	Shaft housing	SSt
9	Stock	12	Hex hd cap screw 5/16-18 x 1 1/4	SSt
10	Stock	12	Washer 5/16 Std	SSt
11	D-45823	2	Support	Steel
12	Stock	8	Hex nut 3/8-16NC-2 std	Steel
13	Stock	4	Washer 3/8 std	Steel
14_3	Stock	5	Motor	Steel
15	D-45822	1	Motor mount	Steel
16	Stock	30	Hex hd cap screw 5/16-18NC-2 x 1/2	SSt
17	D-45824	2	Port Cover Clamp	Steel
18_3	Stock	5	Speed indicator pickup	Steel
19	D-45824	5	Indicator mount	Steel
20	Stock	15	Hex hd cap screw 5/16-18NC-2 x 2 1/2	Steel
21	Stock	12	Hex soc hd cap screw 5/16-18NC-2 x 5/8	Steel
22	D-45823	1	Mounting plate	Steel
23	D-45823	1	Extension	SSt
24_5	Stock	10 ft	Window gasket	Neoprene
25	D-45824	1	Window 27 7/8 x 31 7/8 x 1/4	Safety Glass
26	This Dwg	2	Gasket 8 3/4 OD x 7 15/16 ID x 1/8	Neoprene
27_6	Stock	2	O-ring	Neoprene
28	D-48824	2	Glove Port Clamp	Fiberglass
29	D-45824	2	Glove port ring	Fiberglass
30	D-45824	2	Fire shield	Steel
31	D-45823	1	Gasket	Neoprene
32	D-45823	1	Gasket	Neoprene
33	D-45823	5	Thrust Washer	SSt
34	D-45821	1	Filter adapter	Al
35	Stock	4	Hex nut 1/4-20 NC 2	Steel
36	Stock	4	Hex hd mach screw 1/4-20NC 2 x 1	Steel
37	D-45821	1	Gasket	Neoprene
38_6	Stock	4	Seal	Neoprene
39	Stock	5	Flexible power shaft - See Dwg E-53567	Steel
40	Stock	18	Key 1/8 Sq x 1" Lg	Steel
41	Stock	13	Hex Hd Cap Screw 3/8-16NC2 x 1/2	Steel

Remarks:

1. Boston Gear, Quincy, Mass. Part 4 - spurgear 20 DP, 3 PD, 60 teeth, 3/8 face, 1/2 bore with setscrew - Cat. No. HA60. Part 5 - coupling 1/2 bore, Part No. FCB812 - 1/2".
2. Crown gear, 320 Park Ave., Worchester, Mass. Part 6 - 90° gear box, 2-way, No. 152806.
3. General Electric Co., Schanectady, N. Y. Part 14 - motor type BC 1/8 HP, 1725 RPM, Totally enclosed ball bearing, 115V D.C.
4. Electroproducts Laboratory, Part 18 - Proximity pickup Model 3010A.
5. Inlock Company, Part 25 - Two piece gasket equal to Inlock Cat. No. 200, Part 764286 (neoprene).
6. Precision Rubber Products Corp., Dayton, Ohio. Part 27 - Neoprene O-ring No. 568-445. Part 38 - Dynaseal No. 110-1/4

Note; Parts 7a, 7b, 7c, 7d To Have 1/8 Wide x 1/16 Deep x 1" Lg Keyway Each End.

REFERENCE DRAWINGS	DWG. NO.
CELL 3 & 4 ROOF PLUG COVER PLATES	D-45926
CELL 4 ROOF PLUG PENETRATIONS	D-45924
MIXER SETTLER REMOTE DRIVE ASSY	E-53567
" " " " " 4	D-45824
" " " " " 3	D-45823
" " " " " 2	D-45822
" " DRIVE DET SH 1	D-45821
" " - "	D-45810
MIXER SETTLER - ASSY	D-45811

TRANSURANIUM DEVELOPMENT PROJ. NO. 4507

MIXER SETTLER DRIVE ASSEMBLY

OAK RIDGE NATIONAL LABORATORY
OPERATED BY
UNION CARBIDE NUCLEAR COMPANY
DIVISION OF UNION CARBIDE CORPORATION
OAK RIDGE, TENNESSEE

SUBMITTED: K. Samson, R. Schmull
APPROVED: Jon E. Lugg, F. F. Pavlik
APPROVED: [illegible]

D-45820

GENERAL SPECIFICATIONS:
1. Break all sharp edges 1/64 max. unless otherwise specified.
2. The fabricator may choose the type, grade or finish of material unless otherwise specified.

MACHINE FINISH SPECIFICATIONS:
1. Finish symbols are in accordance with ASA Standard B46.1-1962.
2. Roughness height values are the maximum arithmetical average deviation from the mean surface, expressed in microinches.
3. For surfaces not otherwise indicated, roughness height shall not exceed 125.

CLASSIFICATION

LIMITS ON DIMENSIONS UNLESS OTHERWISE SPECIFIED
FRACTIONS ±
DECIMALS ±
ANGLES ±
SCALE: 1/4 = 1

LTR	REVISIONS	DATE	APPD	APPD
DRAWN	DATE 10-24-62 CHECKED J. Nicholson DATE 11-1-62 APPROVED	DATE 11-6-62		
DESIGNED	DATE 10-62 SUBMITTED DATE 11-5-62 APPROVED	DATE		

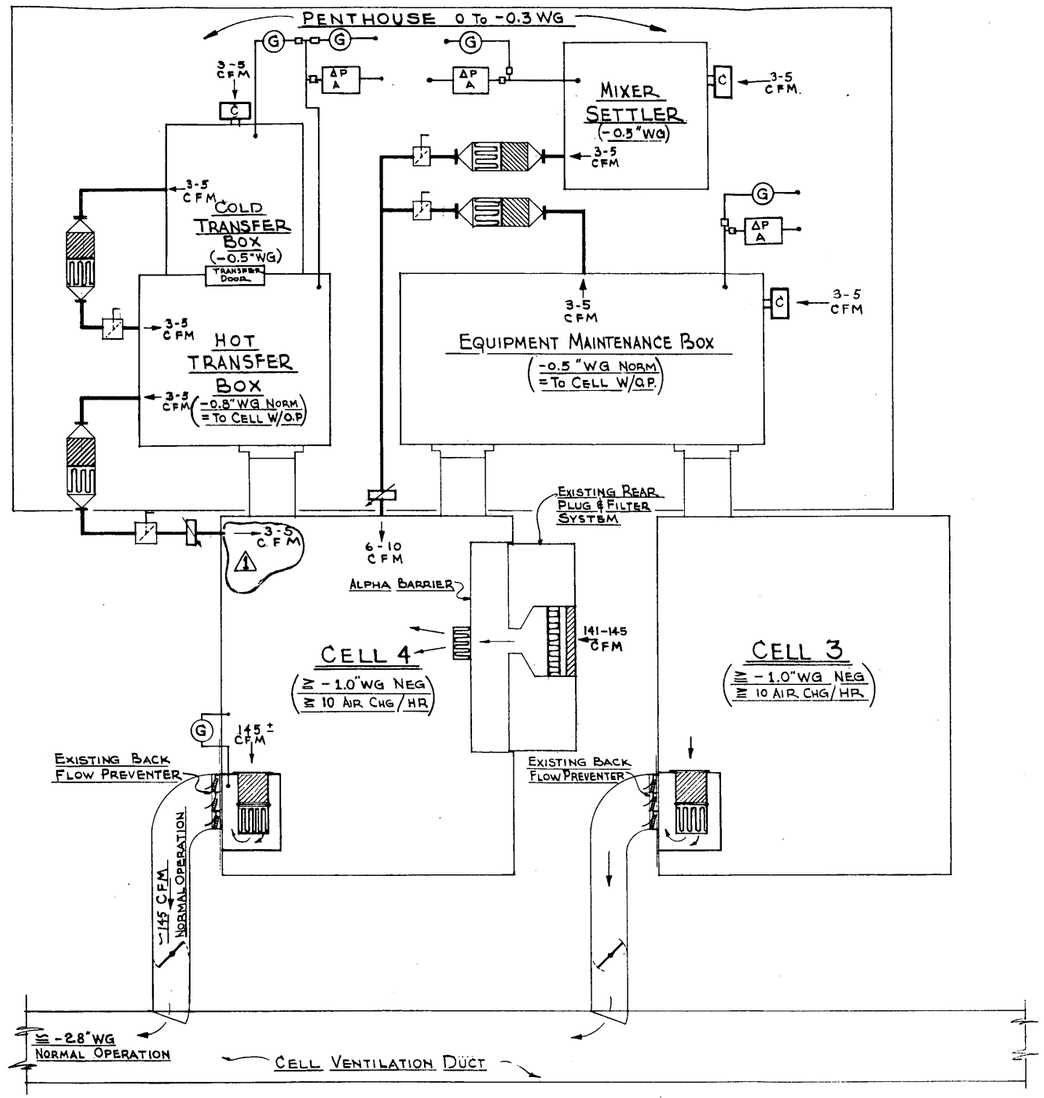

SCHEMATIC AIR FLOW DIAGRAM

LEGEND

- BUTTERFLY VALVE
- BACK FLOW PREVENTER
- FILTER, CANNISTER ELEMENT ABSOLUTE TYPE
- DUAL ΔP SWITCH WITH LIGHTS (R & G)
- PRESSURE GAGE
- DISCONNECT
- HIGH EFFICIENCY FILTER ABSOLUTE TYPE
- PRE-FILTER

7-5-62 THIS TRACING REPLACES THE ORIGINAL TRACING OF SAME NUMBER WHICH IS MISPLACED. A PRINT OF THE ORIGINAL WAS COPIED TO PROVIDE ACCURATE DUPLICATION.

NO.	REVISIONS	DATE	APPD	APPD
1	AS BUILT REVISION: REMOVED CELL OFF-GAS HEADER CONN	7/3/63	W.E.D. 7/9/63	C.G.R.

DRAWN RAINES	DATE 6/25/62	SUBMITTED	DATE 7/9/62	APPROVED H. W. WALKER C.G.R.	DATE 7/9/62
DESIGNED DUNLAP-FULLER	DATE 6-27-62	APPROVED	DATE 7/9/62	APPROVED	DATE
CHECKED W.E. DUNLAP	DATE 6-27-62	APPROVED	DATE 7-9-62	APPROVED	DATE 7-9-62

A-70618-110

REFERENCE DRAWINGS	DWG. NO.
DRAWING LIST FOR PROJECT	D-45850
CELL EXHAUST FILTER CONTAINER - SEC.	D-45877
CELL EXHAUST FILTER CONTAINER - PLAN	D-45876

TRU DEVELOPMENT - CELL 4 — SLIDE NO. 4507

CLASSIFICATION

LIMITS ON DIMENSIONS UNLESS OTHERWISE SPECIFIED
FRACTIONS: ±
DECIMALS: ±
ANGLES: ±
SCALE: NONE

SCHEMATIC AIR FLOW DIAGRAM

OAK RIDGE NATIONAL LABORATORY
OPERATED BY
UNION CARBIDE NUCLEAR COMPANY
DIVISION OF UNION CARBIDE CORPORATION
OAK RIDGE, TENNESSEE

SUBMITTED K. E. Cannon — ADVISED W. C. Lyons — APPROVED W. Davis

D-45875 — REV 1

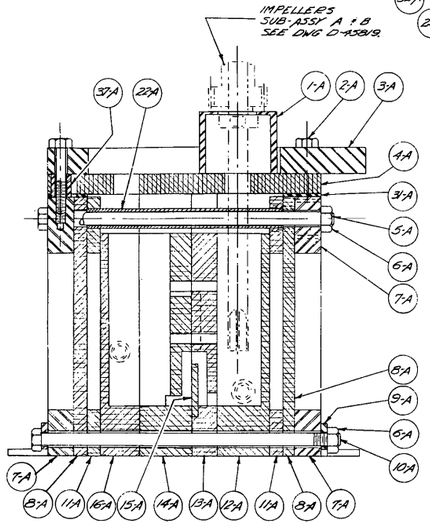

RANDOM SECTION
FULL SCALE

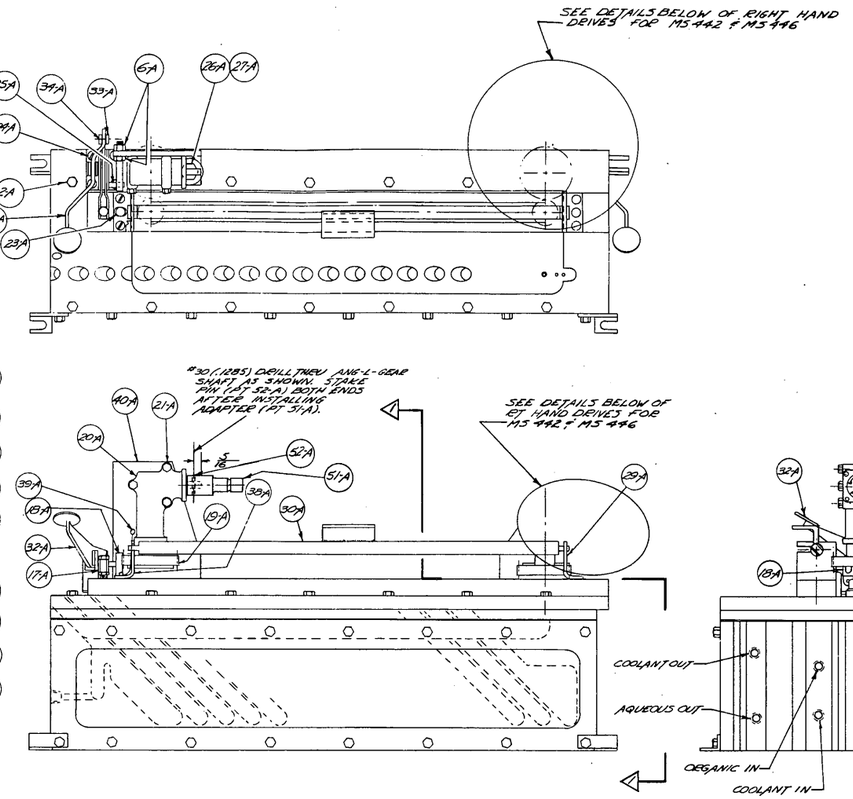

ASSEMBLY
SCALE: 1/2 = 1

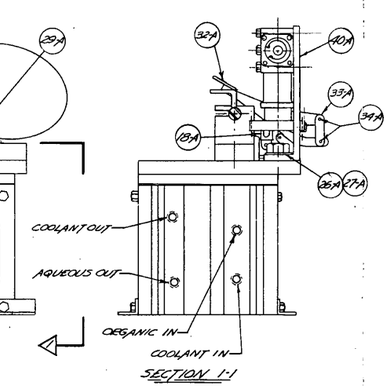

SECTION 1-1

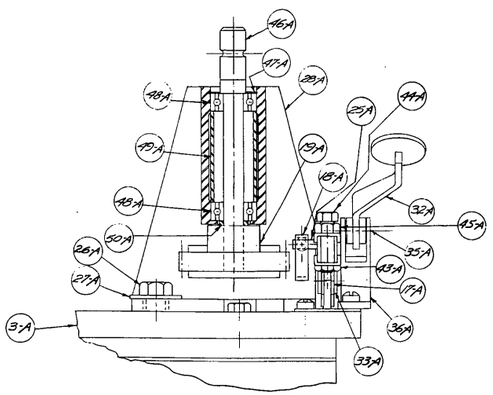

RT. HAND DRIVE - MS 442
SCALE: FULL
PTS 1A & 23A NOT SHOWN

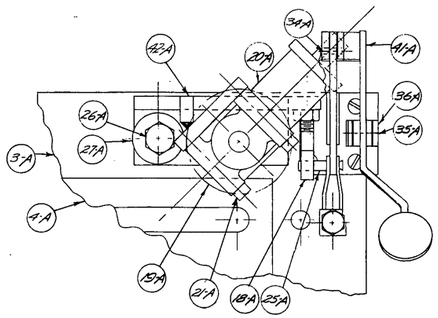

RT. HAND DRIVE - MS 446
SCALE: FULL
PTS 1A & 23A NOT SHOWN

PARTS LIST

PART NO	DWG NO	NO REQD	DESCRIPTION (NAME, SIZE, ETC)	MATL
1A	D-45817	1	MOUNTING BLOCK - 20 × 1 1/16 × 1 3/16	SST
2A	STOCK	14	HEX HD CAP SCW - #10-24NC-2 × 1/4	SST
3A	D-45816	1	MOUNTING PLATE - 20 1/4 × 6 7/8 × 1/4	SST
4A	D-45816	1	TOP PLATE - 20 3/8 × 5 1/4 × 3/8	HOMALITE
5A	STOCK	14	HEX HD CAP SCW - 1/4-20NC-2 × 5 1/2	SST
6A	STOCK	20	HEX NUT - 1/4-20NC-2	SST
7A	D-45812	2	SIDE CLAMP PLATE - 20 3/8 × 5 × 1/2	SST
8A	D-45812	2	WATER JACKET - 20 3/8 × 5 × 1/2	HOMALITE
9A	D-45814	4	HOLD DOWN PLATE - SEE DETAIL	SST
10A	STOCK	2	HEX HD CAP SCW - 1/4-20NC-2 × 5 3/4	SST
11A	D-45813	2	SPACER - 20 3/8 × 5 × 1/4	HOMALITE
12A	D-45815	1	BACK PLATE - 20 3/8 × 5 × 1	HOMALITE
13A	D-45814	1	BACK INTERMEDIATE PLATE - 20 3/8 × 5 × 1/2	HOMALITE
14A	D-45813	1	FRONT INTERMEDIATE PLATE - 20 3/8 × 5 × 1	HOMALITE
15A	D-45814	1	WIER - 17 15/16 × 1 × .125	HOMALITE
16A	D-45813	1	FRONT PLATE - 20 3/8 × 5 × 3/8	HOMALITE
17A	D-53560	2	CLAMP - SEE DETAIL	SST
18A	D-45817	2	ACTUATOR ARM - SEE DETAIL	SST
19A	STOCK	2	GEAR	NYLON
20A	STOCK	–	ANG-L-GEAR	SST
21A	STOCK	–	HEX HD CAP SCW - #10-24NC-2 × 1 1/2	SST
22A	STOCK	6	SPACER SLEEVE - 3/8 OD × 9/32 ID × 3 3/4	
23A	D-45816	2	SPECIAL DOWEL PIN - SEE DETAIL	SST
24A	STOCK	12	FILL HD MACH SCW - #10-24NC-2 × 1/2	SST
25A	D-45817	2	ACTUATOR PIN - 3/16 DIA × 7/8	SST
26A	STOCK	2	HEX HD CAP SCW - 3/8-16NC-2 × 5/8	SST
27A	D-53560	2	SPACER - 1 DIAM × 5/16	SST
28A	E-53561	1	RT MOUNTING BRACKET MS 442 SEE DET	SST
29A	D-45814	1	ROD END BRACKET - SEE DETAIL	SST
30A	D-45814	1	ROD - SEE DETAIL	SST
31A	D-45818	1	GASKET - 20 3/8 × 5 1/4 × 1/16	NEOPRENE
32A	D-45818	–	LEVER - SEE DETAIL	SST
33A	D-45818	–	LINK - SEE DETAIL	SST
34A	STOCK	–	ROLL PIN - 1/8 DIA × 3/4	SST
35A	STOCK	2	ROLL PIN - 1/8 DIA × 7/16	SST
36A	D-45818	2	LEVER BRACKET - SEE DETAIL	SST
37A	STOCK	14	SPACER - 3/8 OD × 9/32 ID × LENGTH AS REQD	SST
38A	D-45814	1	ROD END BRACKET - SEE DETAIL	SST
39A	D-45814	1	LOCK SPRING - SEE DETAIL	MUSIC WIRE
40A	D-45817	1	LEFT MOUNTING BRACKET - SEE DETAIL	SST
41A	D-53560	1	LEVER - MS 446 ONLY - SEE DETAIL	SST
42A	E-53561	1	RT MOUNTING BRACKET - MS 446 - SEE DET	SST
43A	D-53560	2	HEX NUT - 1/2-28NF-2 SEE DETAIL	SST
44A	STOCK	2	HEX HD CAP SCW - 1/2-28NF-2 × 1	SST
45A	STOCK	2	HEX JAM NUT - 1/2-28NF-2	SST
46A	E-53561	1	SHAFT - MS 442 - 1/2 × 1/2 × 4 11/16	SST
47A	STOCK	1	RETAINING RING - MS 442	SST
48A	STOCK	2	BEARING - MS 442	
49A	E-53561	1	SPACER - MS 442	SST
50A	E-53561	1	SPACER - MS 442	SST
51A	E-53561	1	DRIVE ADAPTER - 3/4 DIAM × 2 1/2	SST
52A	STOCK	1	PIN - 1/8 DIAM × 1 3/16	SST

SEE REMARK 6
SEE REMARK 6
SEE REMARK 6
SEE REMARK 6
SEE REMARK 6

REMARKS:
1. MODEL #N-200153 LAPEER MFG CO. LAPEER, MICH.
2. NYLON SPUR GEAR - 24 DP, 20° PRESS ANGLE, 2" PD, 3/8 FACE WITH SST HUB BORED 3/8 DIA (W) SET SCREWS.
3. ANG-L-GEAR MODEL #E-300, AIRBORNE ACCESSORIES INC. HILLSIDE, N.J.
4. FABRICATE FROM DIMENSIONS SHOWN IN PARTS LIST.
5. SPACER LENGTHS TO BE .005 TO .007 LESS THAN COMBINED THICKNESS OF PARTS 4A & 31A.
6. NO. OF PARTS REQD FOR MS 442 & MS 446

	MS 442	MS 446
PART 20-A	1	2
PART 21A	3	6
PART 32A	2	1
PART 33A	2	1
PART 34A	4	3

7. NO. 7008-37 H WALDES TRUARC, WALDES KOHINOOR INC., LONG ISLAND CITY N.Y.
8. NO. 1604-DC BOSTON GEAR CAT #ST

GENERAL NOTES
1. HOLES IN HOMALITE TO BE MADE WITH AN ENDMILL TO PREVENT BREAKAGE.
2. ALL EXPOSED METAL SURFACES TO BE PAINTED AS FOLLOWS.
   A. CLEAN THOROUGHLY.
   B. APPLY 3 COATS OF LIGHT GRAY AMERCOAT #33 STRICTLY IN ACCORDANCE WITH MFGS PAMPHLET "SPECIFICATIONS FOR APPLICATION OF AMERCOAT #33 TO METAL & CONCRETE SURFACES.
3. NO REQD ON PARTS LIST IS FOR ONE MIXER SETTLER ONLY. INDIVIDUAL PTS REQD FOR 2 MIXER MS 442 OR MS 446 ARE SO NOTED.

REFERENCE DRAWINGS	DWG. NO.
MIXER SETTLER BACK & DETAILS	E-53554
IMPELLERS - SUB ASSY A & B & DETAILS	D-45809
MIXER SETTLER, DETAIL SHEET #9	E-53561
#8	D-53560
#7	D-45818
#6	D-45817
#5	D-45816
#4	D-45813
#3	D-45814
#2	D-45813
MIXER SETTLER, DETAIL SHEET #1	D-45812

TRANSURANIUM DEVELOPMENT PROJ. NO. 2007

MS 442 & MS 446 - 16 STAGE MIXER SETTLER ASSEMBLY

CLASSIFICATION

LIMITS OR DIMENSIONS UNLESS OTHERWISE SPECIFIED
FRACTIONAL ±
DECIMAL ±
ANGLES ±
SCALE AS SHOWN

OAK RIDGE NATIONAL LABORATORY
OPERATED BY
UNION CARBIDE NUCLEAR COMPANY
DIVISION OF UNION CARBIDE CORPORATION
OAK RIDGE, TENNESSEE

PREPARED J. F. Pickel
CHECKED J. D. Bingham
APPROVED Van E. Unger

E-53562

NO.	REVISIONS	DATE	APPD	APPD
	DRAWN L. Hulsey 8-9-62 / SUBMITTED B.L. Marvin / Mgr. / DATE 9-4-62	APPROVED	DATE	
	DESIGNED / DATE / APPROVED / DATE	APPROVED	DATE	
	CHECKED D.J. Dempster / DATE 8-14-62 / APPROVED / DATE	APPROVED	DATE	

INTRA-LABORATORY CORRESPONDENCE

OAK RIDGE NATIONAL LABORATORY

attach to and file

To: Distribution

From: W. E. Unger

Subject: CF Memo 63-7-50, "Hazard Evaluation for Processing Transuranium Elements in Cell 4 of Building 4507

Date: August 5, 1963

The enclosed drawings are to be attached to the above memo. These were not ready when the memo was sent out Friday.

W. E. Unger

WEU/nr

Enclosures: Drawings E-53526
E-53525
E-53544

DISTRIBUTION

F. Kertesz
F. R. Bruce
W. D. Burch
D. G. Doherty
D. E. Ferguson
J. T. Howe
T. W. Hungerford
R. J. Jones
H. F. McDuffie
C. H. Miller
W. E. Unger
R. G. Wymer
J. P. Nichols
F. L. Peishel
V. C. A. Vaughen

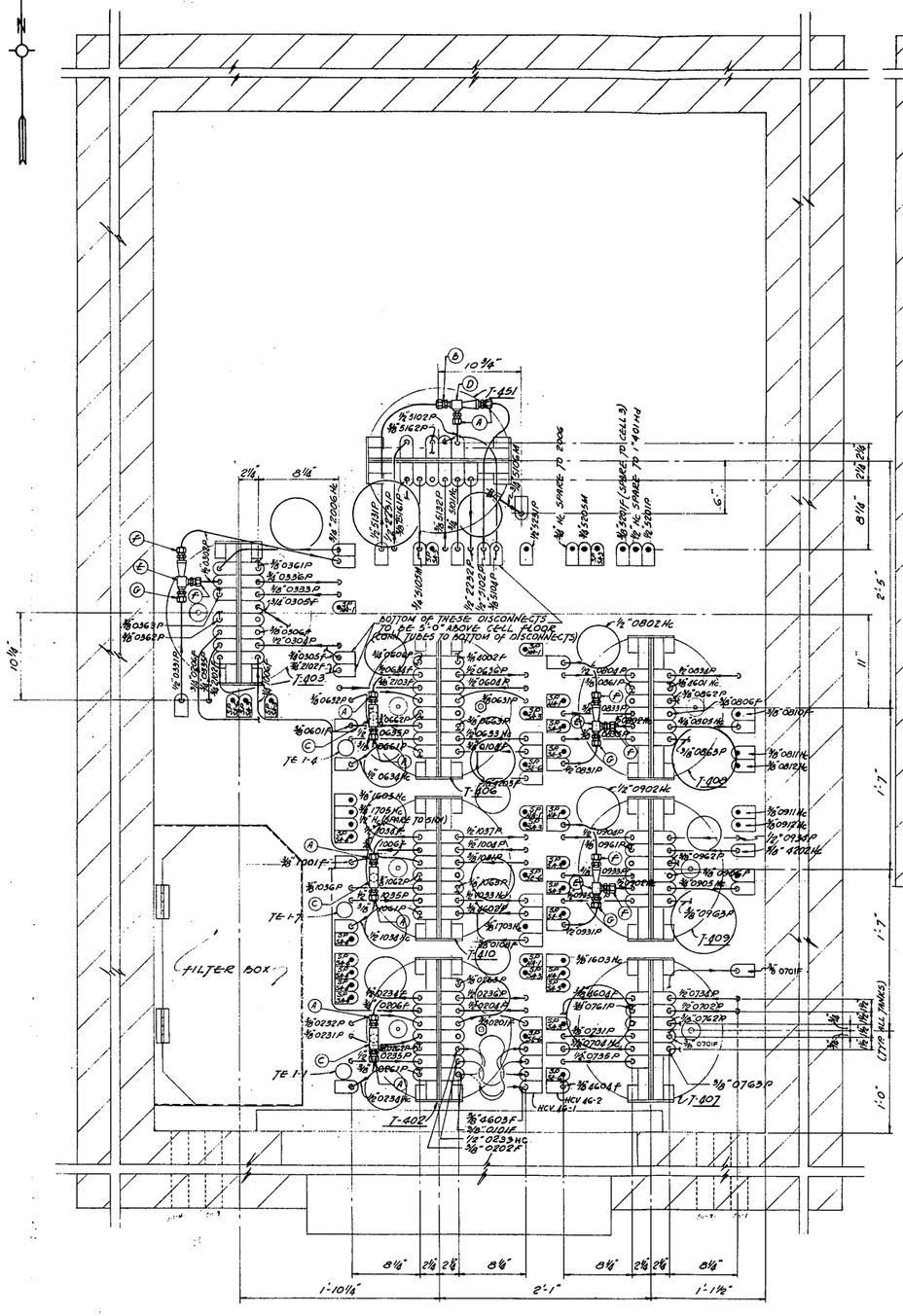

PLAN ABOVE TANK DISCONNECTS

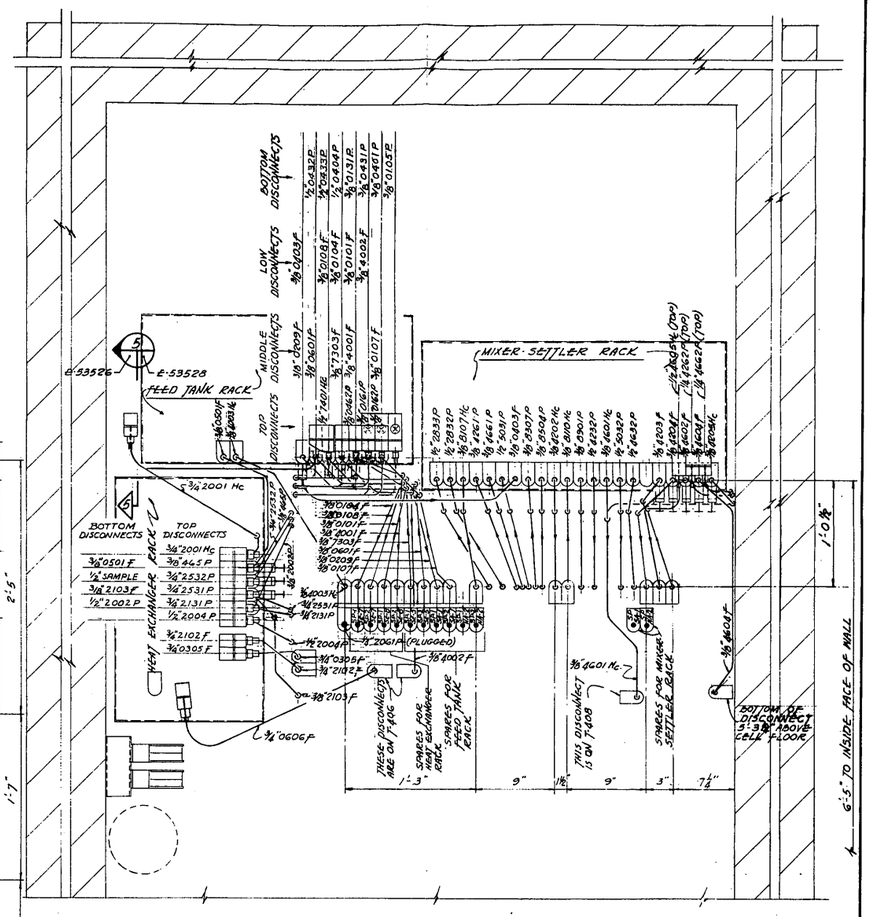

PLAN ABOVE RACK DISCONNECTS

NOTES

(A) ½" O.D. TUBE x ½" I.P.S. MALE CONNECTOR, STAINLESS STEEL TYPE 304, "SWAGELOK" NO. 810-1-8
(B) ½" O.D. TUBE x ⅜" I.P.S. MALE CONNECTOR, STAINLESS STEEL TYPE 304, "SWAGELOK" NO. 810-1-6
(C) ½" STEAM TRAP, "YARWAY" SERIES 130 IMPULSE TRAP
(D) EJECTOR, STAINLESS STEEL
(E) EJECTOR, HASTELLOY-C
(F) ½" O.D. TUBE x ½" I.P.S. MALE CONNECTOR, HASTELLOY-C, "SWAGELOK" NO. 810-1-8
(G) ½" O.D. TUBE x ⅜" I.P.S. MALE CONNECTOR, HASTELLOY-C, "SWAGELOK" NO. 810-1-6

GENERAL NOTES

1- PIPING FABRICATION TO BE AS PER O.R.N.L. INSTRUCTIONS.
2- PIPING TESTING TO BE AS PER O.R.N.L. INSTRUCTIONS.
3- USE MINIMUM BENDING RADIUS ON ALL METAL TUBING BENDS.

Legend

P - POLYETHYLENE TUBING
F - TANTALUM TUBING
Hc - HASTELLOY-C TUBING
M - STAINLESS STEEL TUBING, .035" WALL, 304
Mc - STAINLESS STEEL TUBING, .049" WALL, 304

- DISCONNECT
- DESIGNATES SPARE
- PLUGGED DISCONNECT
- DESIGNATES SLEEVE THAT SPARE LINE COMES THRU.
- JUMPER LINE CONNECTED TO BOTTOM OF DISCONNECT

REFERENCE DRAWINGS	DWG. NO.
MIXER SETTLER RACK	D-53531
FEED TANK RACK	D-53530
HEAT EXCHANGER RACK	D-53529
PIPING SECTIONS SHEET 2	D-53572
PIPING SECTIONS SHEET 1	D-53528

REFERENCE DRAWINGS	DWG. NO.
ISOMETRIC FABRICATION SKETCHES SH. #3	E-SK-701-115
ISOMETRIC FABRICATION SKETCHES SH. #2	E-SK-701-112
ISOMETRIC FABRICATION SKETCHES SH. #1	E-SK-701-111
PIPING PLAN SHEET 4	D-53571
PIPING PLAN SHEET 3	D-53570
PIPING PLAN SHEET 2	D-53527
SINGLE OR GANG DISCONNECT, CASTING & DET.	D-46117

WHENEVER A MANUFACTURER'S NAME OR CATALOG NUMBER IS INDICATED ON THE DRAWINGS, AN APPROVED EQUAL MAY BE SUBSTITUTED UNLESS OTHERWISE STATED.

NUMBER OF SECTION OR DETAIL
DRAWING ON WHICH SECTION OR DETAIL IS TAKEN
DRAWING ON WHICH SECTION OR DETAIL IS SHOWN

SECTION & DETAIL KEY

CLASSIFICATION

LIMITS ON DIMENSIONS UNLESS OTHERWISE SPECIFIED
FRACTIONS ±
DECIMALS ±
ANGLES ±
SCALE 2" = 1'-0"

TRANSURANIUM DEVELOPMENT — BLDG. NO. 4507

PIPING PLAN — SHEET-1 — CELL #4

OAK RIDGE NATIONAL LABORATORY
OPERATED BY
UNION CARBIDE NUCLEAR COMPANY
DIVISION OF UNION CARBIDE CORPORATION
OAK RIDGE, TENNESSEE

DESIGNED F. L. Parshall — CHECKED V. C. Vaughn — APPROVED Wm. E. Unger

E-53526 — B

NO.	REVISIONS	DATE	APPD	APPD
B	RELOCATED ⅜ 0701F, ⅜ 4603F, ⅜ 0101F, ½ 0233HF, ⅜ 0202F	3-8-63		
A	GENERAL REVISION	1-28-63		

DRAWN	DATE	SUBMITTED	DATE	APPROVED	DATE
WW-ORGDP	7-27-62				
CHECKED	DATE	APPROVED	DATE	APPROVED	DATE
T.L. ORGDP	11-6-62				
CHECKED	DATE	APPROVED	DATE	APPROVED	DATE
T.L. ORGDP	11-6-62				

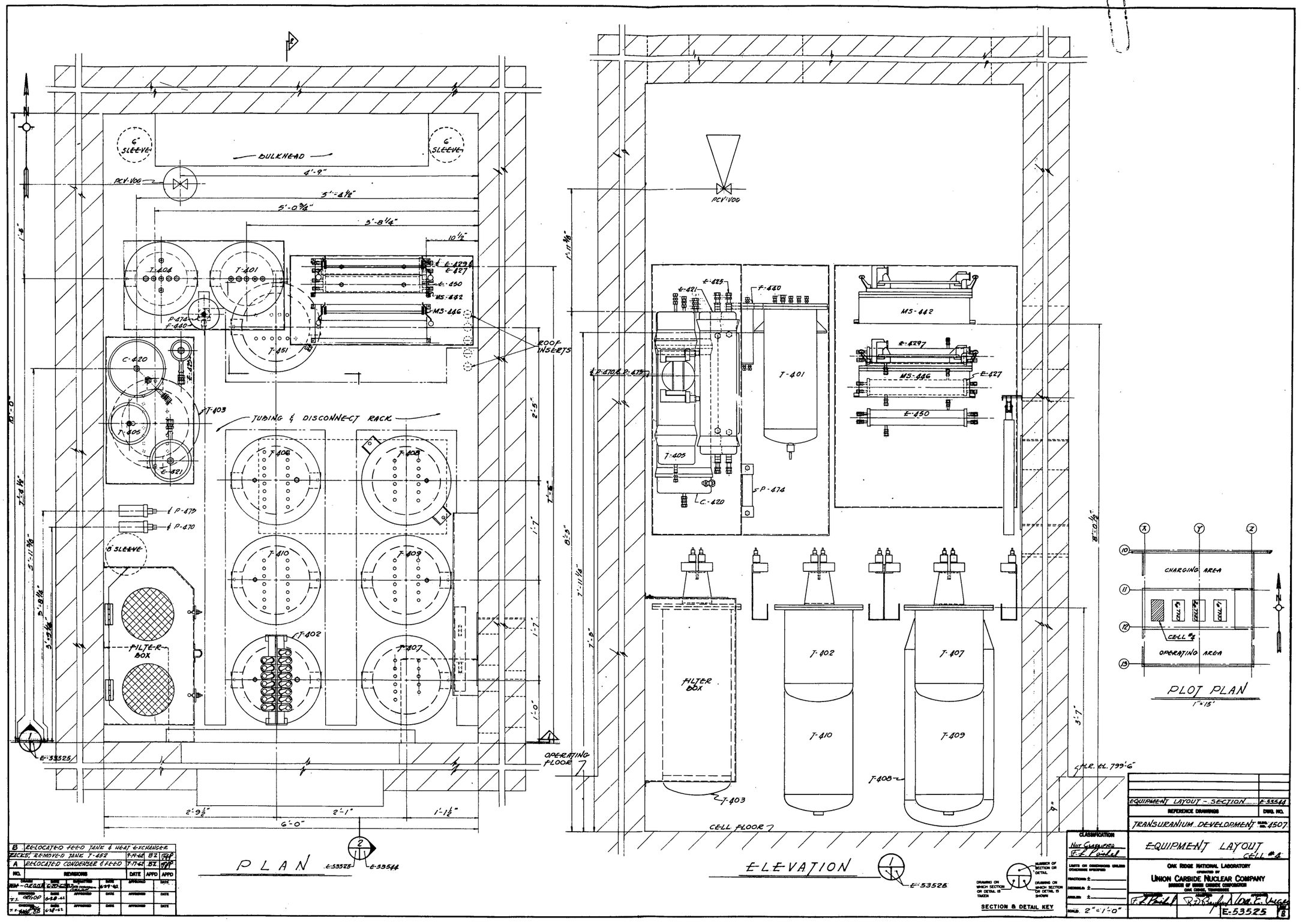

NO.	REVISIONS	DATE	APPD	APPD
B	RELOCATED FEED TANK & HEAT EXCHANGER RACKS, REMOVED TANK T-452	9-19-62	BZ	
A	RELOCATED CONDENSER & FEED	7-17-62	BZ	

SECTION & DETAIL KEY

CLASSIFICATION: Not Classified — F. L. Peishel

LIMITS ON DIMENSIONS UNLESS OTHERWISE SPECIFIED: FRACTIONS ±; DECIMALS ±; ANGLES ±

SCALE: 2" = 1'-0"

REFERENCE DRAWINGS	DWG. NO.
EQUIPMENT LAYOUT - SECTION	E-53544

TRANSURANIUM DEVELOPMENT — DWG. NO. 4507

EQUIPMENT LAYOUT CELL #4

OAK RIDGE NATIONAL LABORATORY
OPERATED BY
UNION CARBIDE NUCLEAR COMPANY
DIVISION OF UNION CARBIDE CORPORATION
OAK RIDGE, TENNESSEE

F. L. Peishel — R. D. Bayford — Wm. E. Unger

E-53525 — REV. B

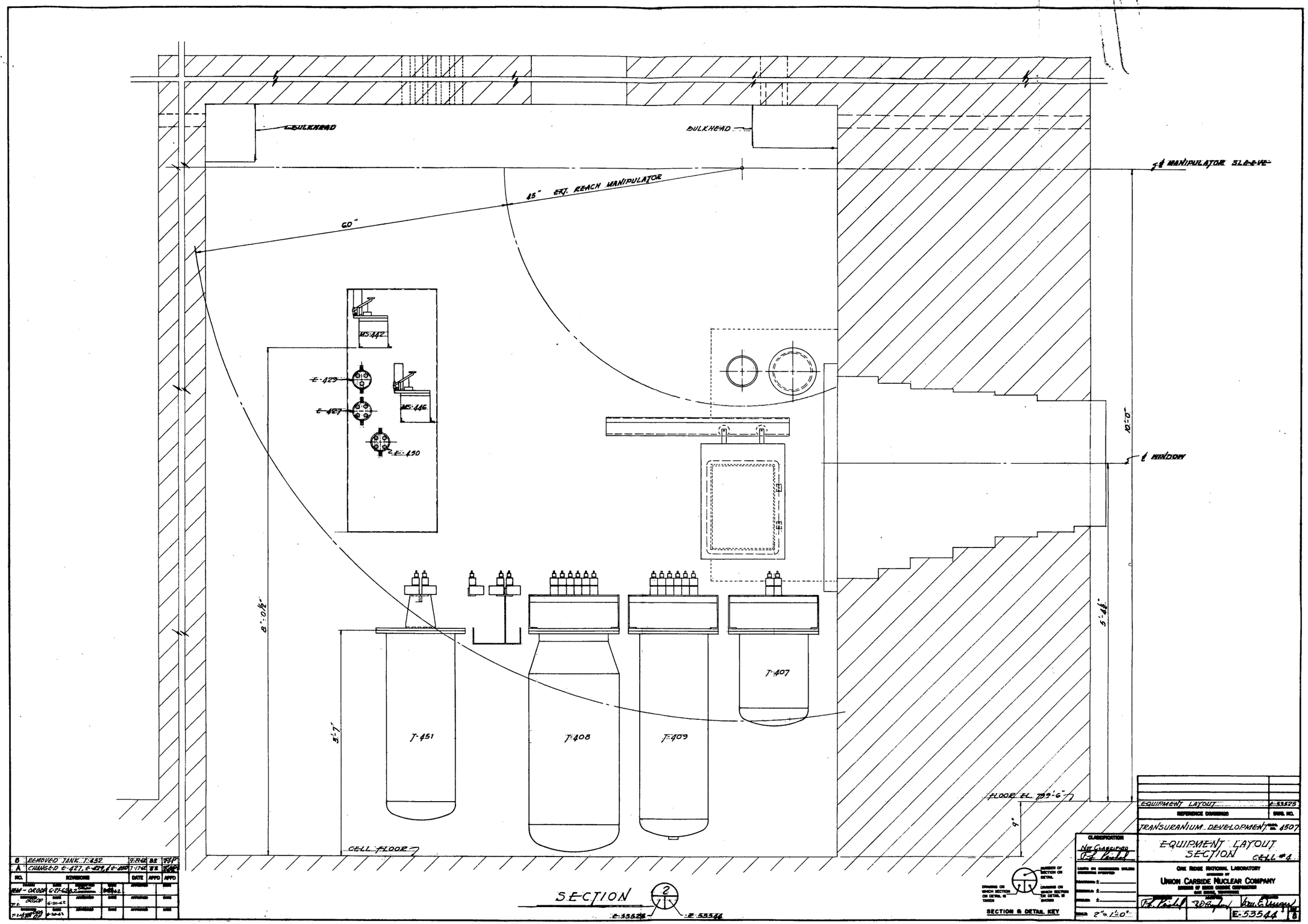

BULKHEAD
BULKHEAD
℄ MANIPULATOR SLEEVE
45" EXT. REACH MANIPULATOR
60"
MS-442
E-429
E-427
MS-446
E-450
10'-0"
℄ WINDOW
8'-0½"
5'-4½"
3'-7"
T-451
T-408
T-409
T-407
FLOOR EL. 799'-6"
9"
CELL FLOOR
SECTION 2
E-53525
E-53544
B REMOVED TANK T-432
A CHANGED E-427, E-429, & E-450
NO. REVISIONS DATE APPD APPD
EQUIPMENT LAYOUT E-53525
REFERENCE DRAWINGS DWG. NO.
TRANSURANIUM DEVELOPMENT 4507
EQUIPMENT LAYOUT SECTION CELL #4
OAK RIDGE NATIONAL LABORATORY
UNION CARBIDE NUCLEAR COMPANY
CLASSIFICATION
NOT CLASSIFIED
SECTION & DETAIL KEY
2" = 1'-0"
E-53544