MARTIN MARIETTA ENERGY SYSTEMS LIBRARIES
3 4456 0134014 9

CENTRAL RESEARCH LIBRARY
DOCUMENT COLLECTION

OAK RIDGE NATIONAL LABORATORY
operated by
UNION CARBIDE CORPORATION
for the
U. S. ATOMIC ENERGY COMMISSION

ORNL-TM-1408

THE WELDING OF NEW SOLUTION-STRENGTHENED NICKEL-BASE ALLOYS

R. G. Gilliland
G. M. Slaughter

CENTRAL RESEARCH LIBRARY
DOCUMENT COLLECTION
LIBRARY LOAN COPY
DO NOT TRANSFER TO ANOTHER PERSON
If you wish someone else to see this document, send in name with document and the library will arrange a loan.

NOTICE This document contains information of a preliminary nature and was prepared primarily for internal use at the Oak Ridge National Laboratory. It is subject to revision or correction and therefore does not represent a final report.

LEGAL NOTICE

This report was prepared as an account of Government sponsored work. Neither the United States, nor the Commission, nor any person acting on behalf of the Commission:

A. Makes any warranty or representation, expressed or implied, with respect to the accuracy, completeness, or usefulness of the information contained in this report, or that the use of any information, apparatus, method, or process disclosed in this report may not infringe privately owned rights; or

B. Assumes any liabilities with respect to the use of, or for damages resulting from the use of any information, apparatus, method, or process disclosed in this report.

As used in the above, "person acting on behalf of the Commission" includes any employee or contractor of the Commission, or employee of such contractor, to the extent that such employee or contractor of the Commission, or employee of such contractor prepares, disseminates, or provides access to, any information pursuant to his employment or contract with the Commission, or his employment with such contractor.

ORNL-TM-1408

Contract No. W-7405-eng-26

METALS AND CERAMICS DIVISION

THE WELDING OF NEW SOLUTION-STRENGTHENED NICKEL-BASE ALLOYS

R. G. Gilliland G. M. Slaughter

This paper is being submitted to the Welding Journal.

APRIL 1966

OAK RIDGE NATIONAL LABORATORY
Oak Ridge, Tennessee
operated by
UNION CARBIDE CORPORATION
for the
U.S. ATOMIC ENERGY COMMISSION

MARTIN MARIETTA ENERGY SYSTEMS LIBRARIES

3 4456 0134014 9

THE WELDING OF NEW SOLUTION-STRENGTHENED NICKEL-BASE ALLOYS*

R. G. Gilliland G. M. Slaughter
Metals and Ceramics Division
Oak Ridge National Laboratory

ABSTRACT

The shielded metal-arc welding of two new solid-solution-strengthened, nickel-base alloys, designated Inconel Alloy 625 and IN-102, has been investigated. Welds were made in 1 1/4-in.-thick Inconel Alloy 625 and 5/8-in.-thick IN-102 plate; in addition, hot ductility studies on both alloys were included.

The weldabilities of these alloys were considered good in that no cracking or porosity problems were encountered. Tensile and stress-rupture tests on welds at room temperature and at elevated temperatures showed good correlation with published data for the base metals. Hot-ductility experiments conducted on simulated heat-affected zone specimens revealed that the nil-ductility temperatures for Inconel 625 and IN-102 were 2250 and 2280°F, respectively. Good recovery of properties upon cooling was observed for both alloys.

INTRODUCTION

The utilization of nickel-base alloys for application in the steam power, gas turbine, space power, and nuclear power areas has been increasing for a number of years. The need for longer service at higher temperatures and stresses has produced new alloys tailored to meet these requirements.

---

*Research sponsored by the U.S. Atomic Energy Commission under contract with the Union Carbide Corporation.

Two new solid-solution-strengthened, nickel-base alloys, designated Inconel Alloy 625 and IN-102 and of potential interest for several nuclear applications, have been developed commercially. These nickel-chromium-type alloys are strengthened in one case (Inconel Alloy 625) by columbium and molybdenum (Ni—22 Cr—3 Fe—9 Mo—4 Cb, wt %) and the other (IN-102) by columbium, molybdenum, and tungsten (Ni—15 Cr—7 Fe—3 Cb—3 Mo—3 W, wt %). The thermally stable, solid-solution microstructure of these alloys provides good strength and ductility without the deleterious brittle phases often associated with precipitation-hardened alloys.

A welding investigation on these two alloys was conducted in order to determine their general suitability in applications where welds of intermediate section thickness would be required. Typical of such applications would be vessels for containing fluids at high temperatures and heavy-walled piping used in steam power generators.

MATERIALS

Welds were made in 1 1/4-in.-thick Inconel Alloy 625 and 5/8-in.-thick IN-102 alloy plate. Another heat of Inconel Alloy 625 was obtained as 1/2-in.-diam rod for hot-ductility tests. The chemical analyses of these materials are listed in Table 1.

A 5/32-in.-diam experimental welding electrode, designated R-102, was used for the shielded metal-arc welding of both alloys. The core wire of this electrode was the standard IN-102 composition and the flux coating contained supplemental columbium for further strengthening. This electrode was reported to produce sound, crack-free welds in IN-102 plate and possess good operability.[1] The chemical analysis of weld metal deposited with this electrode is also shown in Table 1.

Table 1. Chemical Analyses of Nickel-Base Alloy Used in This Study

Alloy Type	Heat Number	Form	Analyses, wt %											
			Ni	Cr	Fe	Mo	Cb	W	C	Mn	Si	S	Ti	Al
IN-102	015502	5/8-in. plate	Bal	15.53	7.25	3.08	3.03	3.09	0.04	0.35	0.39	0.007	0.64	0.37
Inconel 625	NX-8473	1 1/4-in. plate	Bal	21.50	2.27	8.57	3.93		0.02	0.13	0.26	0.008	0.30	0.19
Inconel 625	NX-9648A	1/2-in. rod	Bal	21.82	1.94	8.83	3.73		0.04	0.10	0.23	0.008	0.19	0.13
R-102 weld deposit	F-5756	5/32-in.-diam electrode	Bal	14.77	11.10	2.34	4.47	3.97	0.07	1.57	0.27	0.004	0.13	0.12

EXPERIMENTAL PROCEDURE

The weldability tests were conducted using highly restrained butt joints. These joints were obtained by joining the test plates to very thick, carbon-steel strongbacks prior to the welding operation. This method is illustrated in Fig. 1 together with the joint design and welding sequence employed.

Side-bend tests were made on the as-welded joints by deforming them around a 4T radius (T = thickness). Transverse specimens were taken from the completed welds for evaluation at room temperature and at elevated temperatures in both tensile and stress-rupture tests. The specimen design for this transverse sample is shown in Fig. 2(a).

All tensile tests were performed using a 12,000-lb capacity hydraulic testing machine at a crosshead speed of 0.05 in./min or a strain rate of 5%/min. The curves of stress vs strain were obtained using load cell-deflectometer outputs. Tests were performed on transverse specimens from both alloys at room temperature and at 1200°F. Sufficient time was allowed for the 1200°F test specimen to reach thermal equilibrium before loading was begun.

Creep-rupture testing was performed using transverse samples from both alloys at temperatures of 1200 and 1500°F. These tests were run in standard lever-arm testing machines and strain data were obtained through dial-gage extensometers attached to the specimen shoulders.

Samples were machined from the as-received base metal for the determination of hot ductility after simulated heat-affected zone thermal cycles. The design for this test specimen is shown in Fig. 2(b). This hot ductility test, which was developed by Nippes and Savage,[2] synthetically reproduces

ORNL-DWG 65-11160R

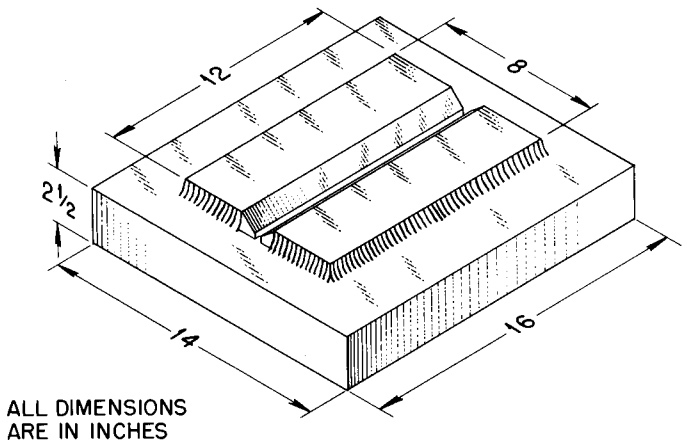

FILLET WELDED TO STRONG BACK
TO PRODUCE HIGH RESTRAINT WELD

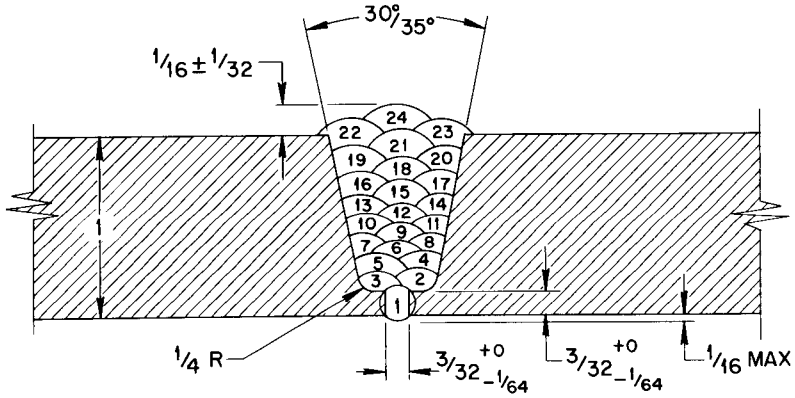

JOINT DESIGN AND WELDING SEQUENCE

Fig. 1. Test Specimen and Welding Sequence for Producing High-Restraint Welds.

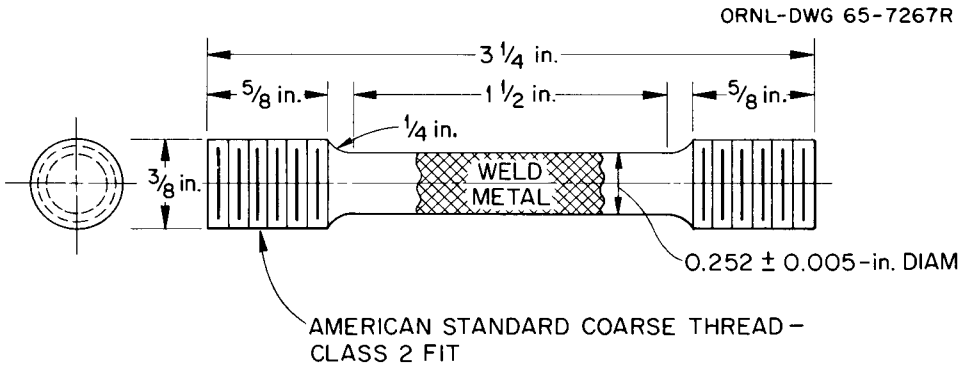

(*a*) Transverse Weld Tensile Specimen.

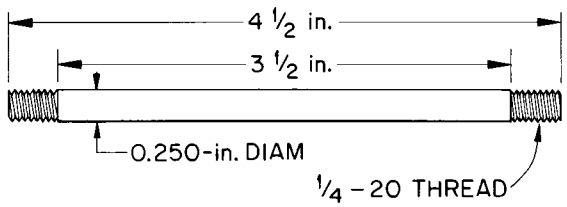

(*b*) Hot Ductility Specimen.

Fig. 2. Specimen Types Used in the Welding Evaluation Program. (a) Tensile and stress-rupture. (b) Hot ductility.

in a laboratory specimen the time-temperature treatment experienced by any selected point in the heat-affected zone of a weld. The cold-rolled IN-102 plate used for these experiments was given a 1-hr anneal at 1600°F, followed by an air cool prior to testing. The Inconel Alloy 625 bar stock was swaged to 5/16-in. diameter and given a hydrogen anneal for 30 min at 2000°F prior to testing. Comprehensive metallographic examinations were performed on the as-welded joints, on tensile and stress-rupture samples, and on thermal-cycled specimens.

RESULTS

The use of the shielded metal-arc welding process for joining these solid-solution alloys was demonstrated to be both feasible and practical. The experimental electrode, R-102, was found to be easily operable and had good deposition characteristics.

The side-bend tests revealed that the joints were of good quality, and no evidence of fissuring was seen. Metallographic evaluation of cross sections of the as-welded joints of each alloy confirmed the soundness with no fissuring observed in the heat-affected zone or weld metal. Macrographs of joint cross sections from the welds of both alloys are shown in Fig. 3(a) and (b). Micrographs of the fusion-line area of welds in Inconel Alloy 625 and IN-102 anneals are shown in Fig. 4(a) and (b), respectively. No evidence of microporosity or microfissuring can be seen.

Average tensile data for Inconel 625 and IN-102 at room temperature and at 1200°F are presented in Table 2. Four specimens were tested at each temperature. The creep-rupture data for these two solid-solution alloys are presented in Table 3 and Fig. 5. The results of the hot-ductility

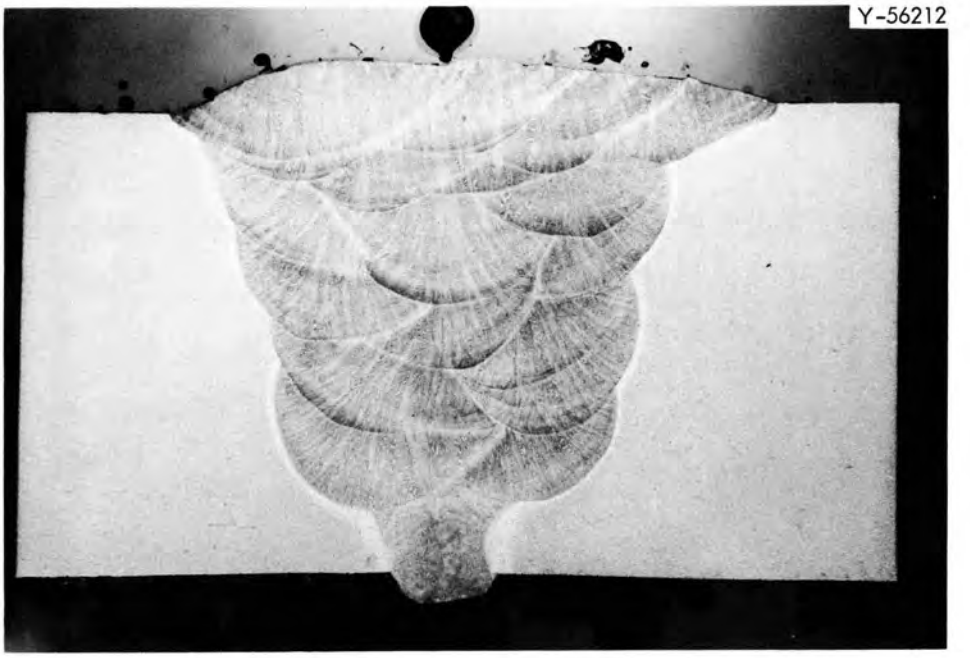

Fig. 3. Macrographs of Weld Joint Cross Sections. Etchant: $H_2C_2O_4$, H_2O (a) Inconel Alloy 625, 3.5×. (b) IN-102, 5×.

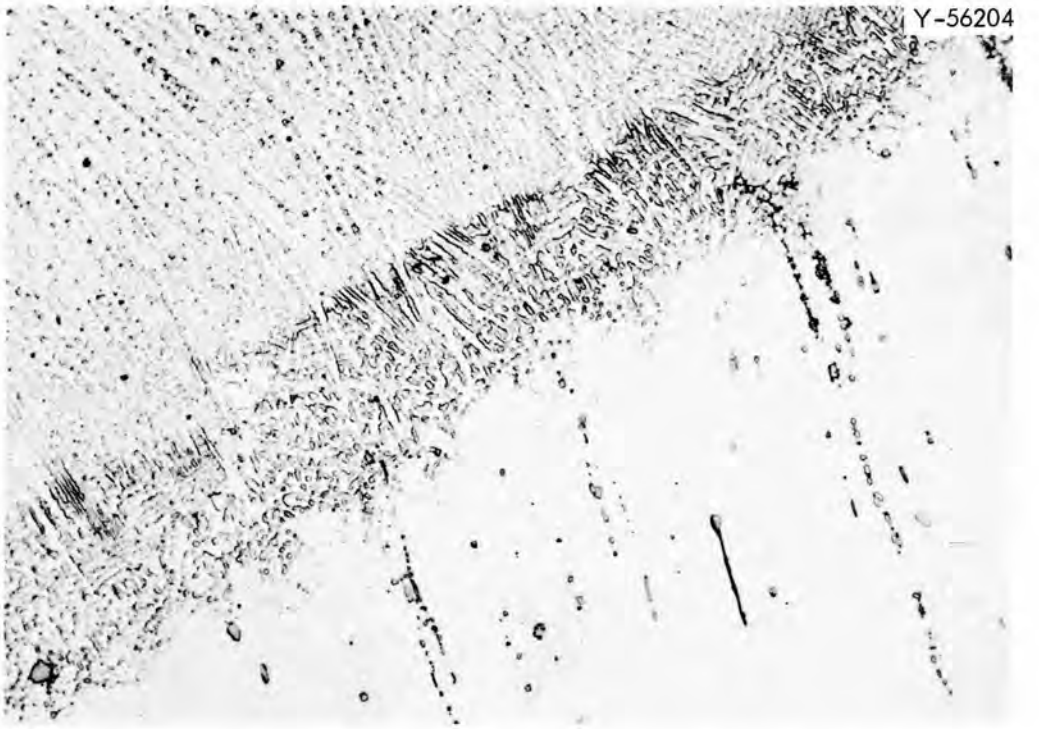

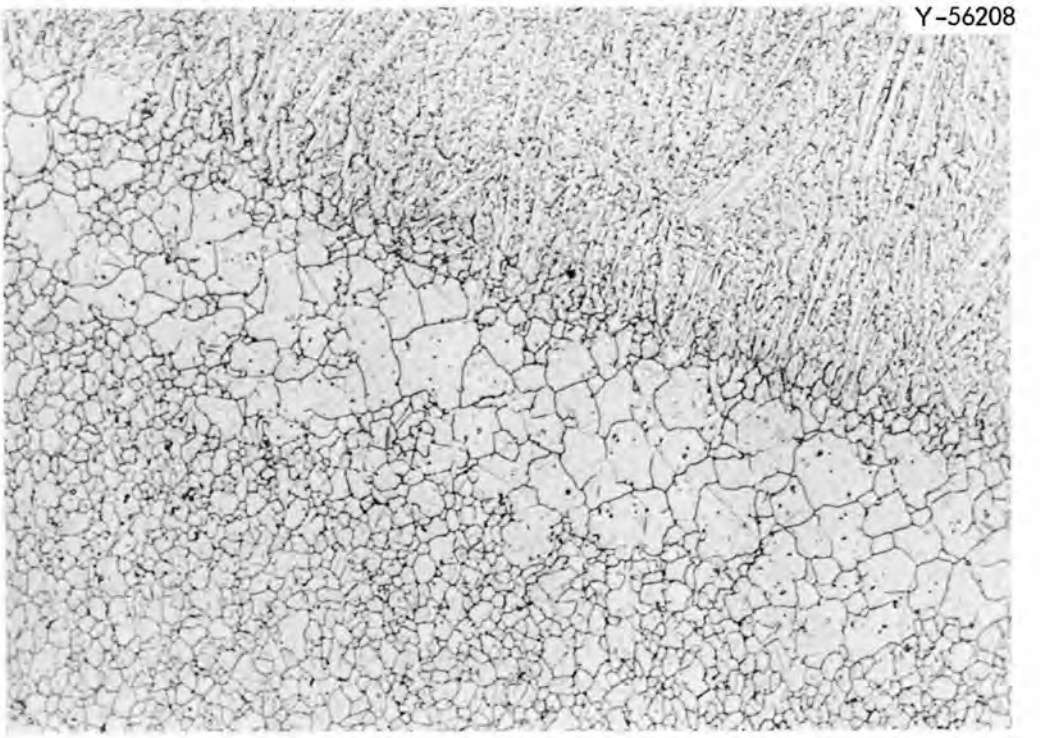

Fig. 4. Micrographs of the Fusion-Line Areas. Etchant: $H_2C_2O_4$, H_2O, 250×. (a) Fusion-line area of welds in Inconel Alloy 625. (b) Weld fusion-line areas in IN-102. 250×. Original reduced 14.5%.

Table 2. Results of Room-Temperature and 1200°F Tensile Tests of Transverse Weld Specimens in IN-102 and Inconel 625

Alloy	Test Temperature (°F)	Tensile Strength (psi)	Yield Strength (psi)	Elongation (%)	Reduction in Area (%)
IN-102	Room	115,000	68,700	31.5	35.7
Inconel 625	Room	116,600	74,300	34.1	40.1
IN-102	1200	87,300	51,000	21.0	29.7
Inconel 625	1200	85,100	55,000	22.6	27.6

Note: (1) All failures occurred in Weld Metal.

(2) Four samples were tested for each case.

Table 3. Results of Creep-Rupture Testing of Transverse Weld Specimens in IN-102 and Inconel 625 at 1200 and 1500°F

Alloy	Test Temperature (°F)	Applied Stress (psi)	Time to Rupture (hr)	Total Strain at Rupture (%)	Minimum Strain Rate (in./in./hr)
Inconel 625	1200	70,000	14.6	1.0	2.9×10^{-4}
Inconel 625	1200	60,000	135.4	0.8	1.9×10^{-5}
Inconel 625	1200	60,000	174.0	1.1	2.5×10^{-5}
IN-102	1200	60,000	179.6	4.2	2.8×10^{-5}
IN-102	1200	60,000	249.6	3.5	1.7×10^{-5}
Inconel 625	1200	55,000	615.9	0.6	5.0×10^{-6}
IN-102	1200	55,000	956.0	4.2	1.3×10^{-5}
Inconel 625	1500	10,000	91.2	7.0	2.8×10^{-4}
IN-102	1500	10,000	121.3	37.0	5.8×10^{-4}

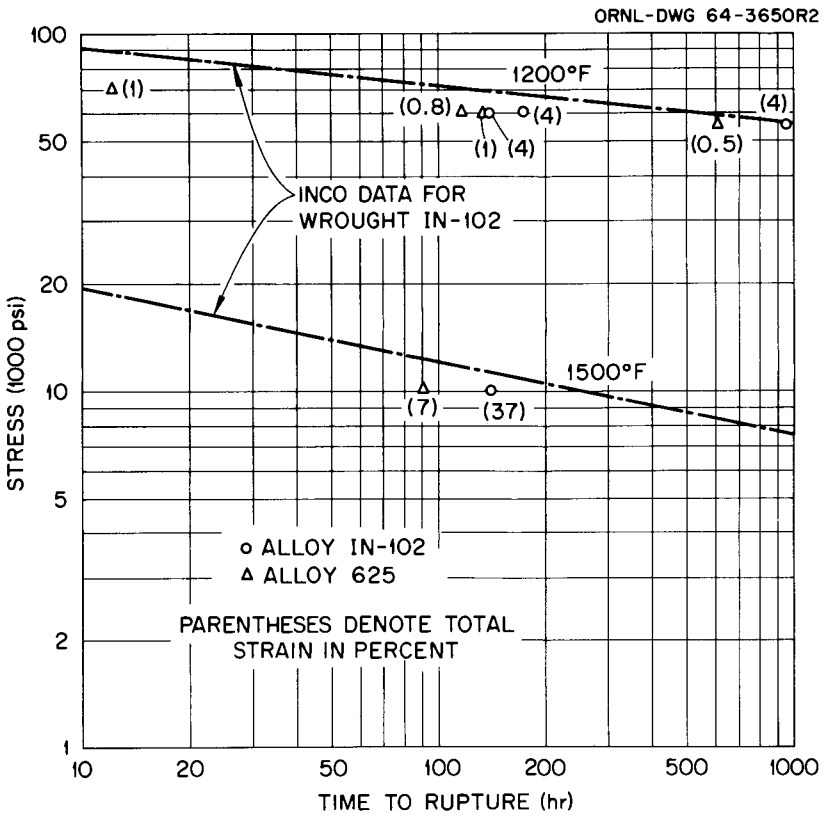

Fig. 5. Creep-Rupture Data of Inconel 625 and IN-102 Transverse-Weld Specimens Tested in Air at 1200 and 1500°F.

investigations are summarized in the curves of Figs. 6 and 7 for Inconel Alloy 625 and IN-102, respectively.

DISCUSSION AND EVALUATION OF RESULTS

The generally good weldability exhibited by the two alloys indicates that they should be satisfactory for applications where heavy sections are required.

Tensile Tests

The room-temperature and 1200°F tensile tests on transverse weld specimens indicated that both of these nickel-chromium alloys possessed similar and excellent mechanical properties at each of the test temperatures. The tensile data presented in Table 2 approximate all-weld-metal properties, since all failures occurred in the weld-metal portion of the specimen. All failures were observed to be intergranular with cracking being confined to the immediate area of the failure.

Creep-Rupture Tests

Good correlation of creep-rupture data for transverse weld specimens with published data for the base metal was observed. At 1200°F the stress-rupture curve converges with the wrought metal data after 1000 hr; at 1500°F the curves actually cross. All failures occurred in the weld-metal portion of the specimens except for the IN-102 test at 1500°F and 10,000 psi applied stress, which failed in the base metal. All failures occurred in an intergranular manner.

Figure 8 shows that the creep ductility (total strain) of Inconel Alloy 625 is consistently lower than that of IN-102, yet there is little

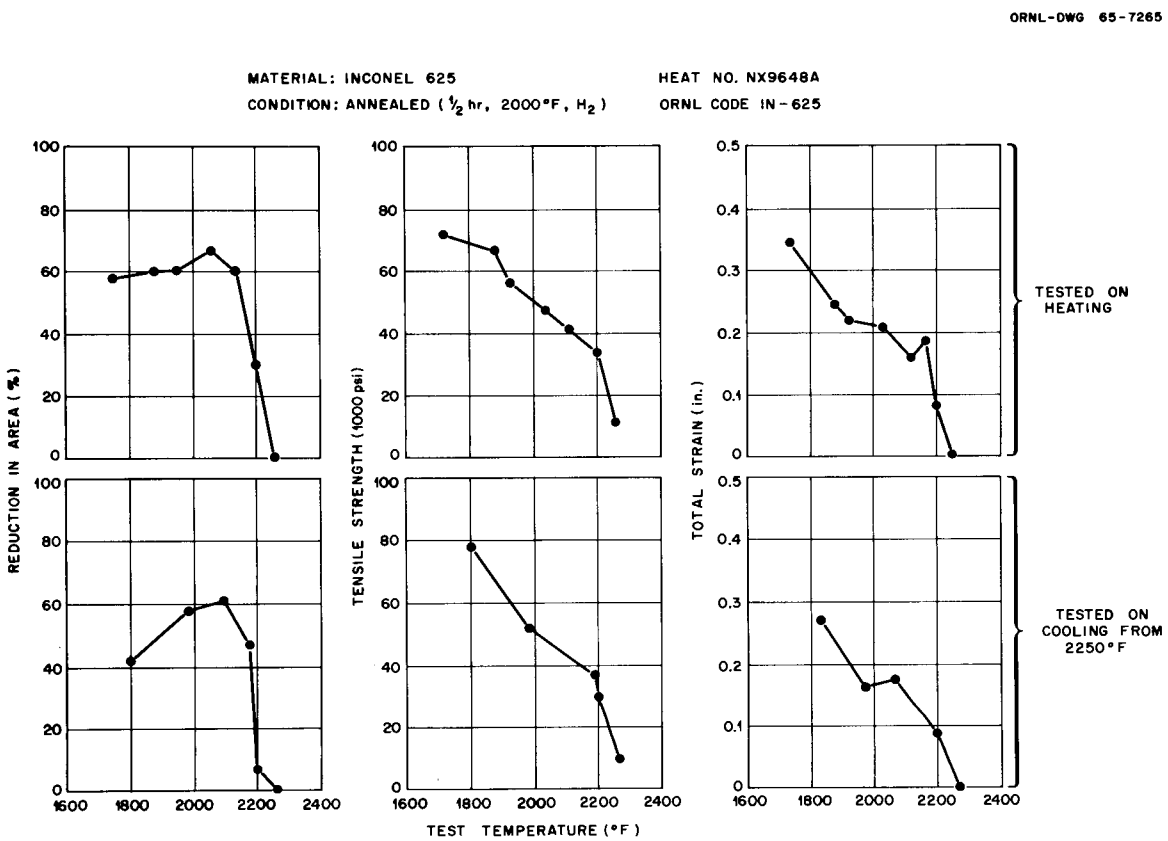

Fig. 6. Results of Hot-Ductility Tests on Inconel Alloy 625. The temperature at which negligible ductility was observed was 2250°F.

ORNL-DWG 65-7266R

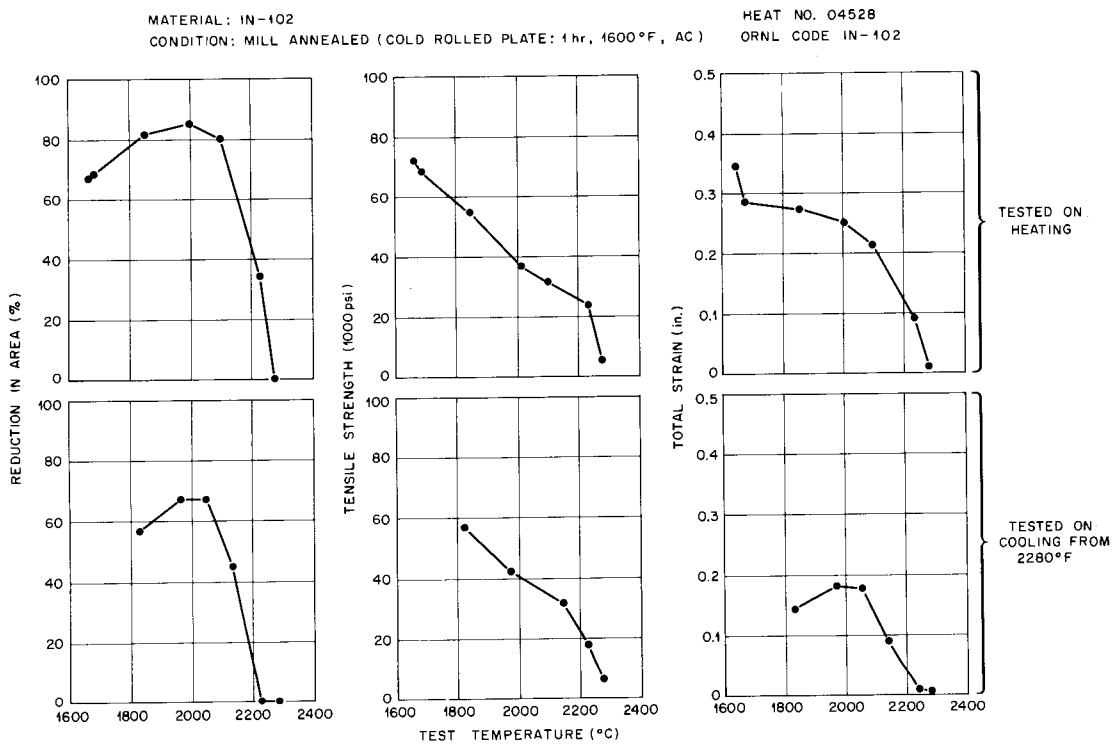

Fig. 7. Results of Hot-Ductility Tests on IN-102. The temperature at which negligible ductility was observed was 2280°F.

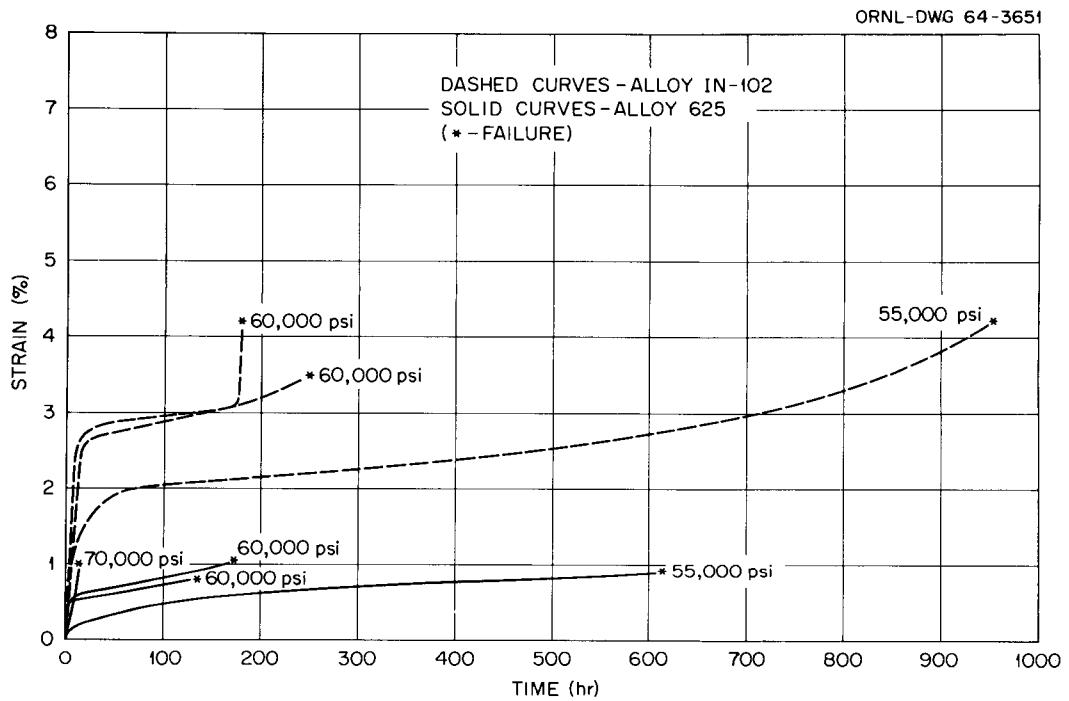

Fig. 8. Percent Strain vs Testing Time for Transverse Weld Samples of IN-102 and Inconel Alloy 625 Tested in Creep at 1200°F in Air.

difference in rupture life for equivalent stress and temperature. As shown in Table 3, the rupture ductility at 1200°F for the IN-102 alloy varied from 3.5 to 4.2%, while the ductility of Inconel Alloy 625 was 1% or less.

Hot Ductility Studies

Using simulated heat-affected zone specimens, hot-ductility experiments were conducted to determine the elevated-temperature nil-ductility point for IN-102 and Inconel Alloy 625. These were found to be 2280 and 2250°F, respectively. The curves of Figs. 6 and 7 indicate that the mechanical properties (i.e., reduction in area, ultimate tensile strength, and total strain) are recovered reasonably well after an exposure to the nil-ductility temperature.

Metallographic Evaluation

An extensive metallographic examination of welds in these two alloys was conducted, both to ensure the general soundness of the welded joints and to explain the observed difference in their creep-rupture ductilities. The composite of Fig. 9 illustrates the appearance of the base metal microstructures for both Inconel Alloy 625 and IN-102 after creep-rupture testing at 1200 and 1500°F.

The as-received microstructures of both alloys are relatively clean, especially Inconel Alloy 625, with the only precipitate being the regular shaped, agglomerated particles shown in Fig. 9. The thermal stability of IN-102 was observed to be excellent with no apparent reactions occurring.

In the case of the Inconel Alloy 625 alloy, the microstructure was observed to be quite unstable. Noticeable grain-boundary precipitation

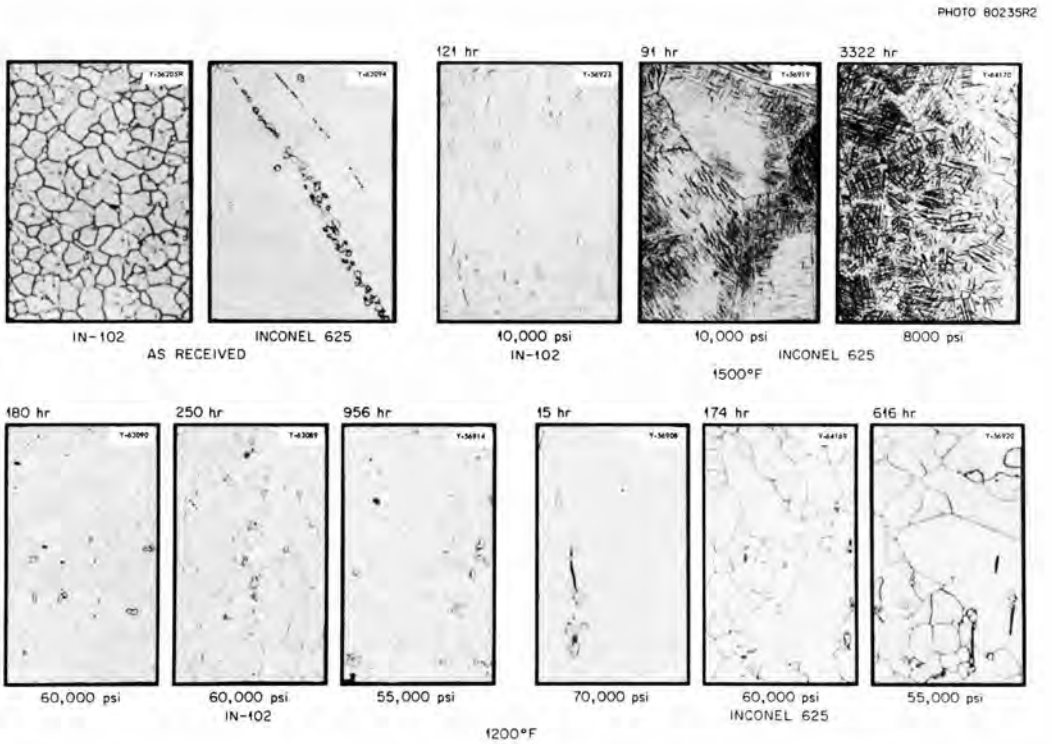

Fig. 9. Composite Showing the Microstructures of IN-102 and Inconel Alloy 625 Base Metal After Creep-Rupture Testing at 1200 and 1500°F. The applied stress and rupture time for the composite specimens are given for each microstructure. Etchant: H_3PO_4, H_2O electrolytic. 500×.

was observed in the specimens tested at 1200°F, with the amount of precipitation being proportional to the time at temperature. Using light microscopy the agglomerated precipitate within the grains appears to be unaffected by holding at 1200°F, but a matrix strengthening was indicated by an increase in microhardness. Figure 9 shows that a significant microstructural change has occurred after testing at 1500°F. The formation of Widmanstätten platelets is observed within the individual grains after holding for approximately 100 hr. Further development of these platelets has occurred after 3300 hr with a corresponding increase noted in the microhardness. The grain boundary precipitant can be faintly seen as an agglomerated, noncontinuous phase in the 3300-hr microstructure.

The composite of Fig. 10 illustrates the appearance of the microstructure of the experimental electrode R-102 after creep-rupture testing at 1200 and 1500°F. The microstructure of the as-welded joint is also shown in this figure.

Extended periods of exposure of the weld metal at 1200°F have caused the carbide precipitates to undergo solution and redistribution. No apparent weld-metal strengthening occurred during this treatment as indicated by microhardness readings. The weld-metal microstructure has undergone considerable change after the 1500°F exposure. As was the case with the Inconel Alloy 625 material, exposure at this temperature has caused the formation of a Widmanstätten platelet structure within the matrix of the weld metal. Prolonged exposure to 1500°F causes further development of this structure.

Evidence of the microstructural differences between IN-102 and Inconel Alloy 625 has also been observed and reported previously.[3–5]

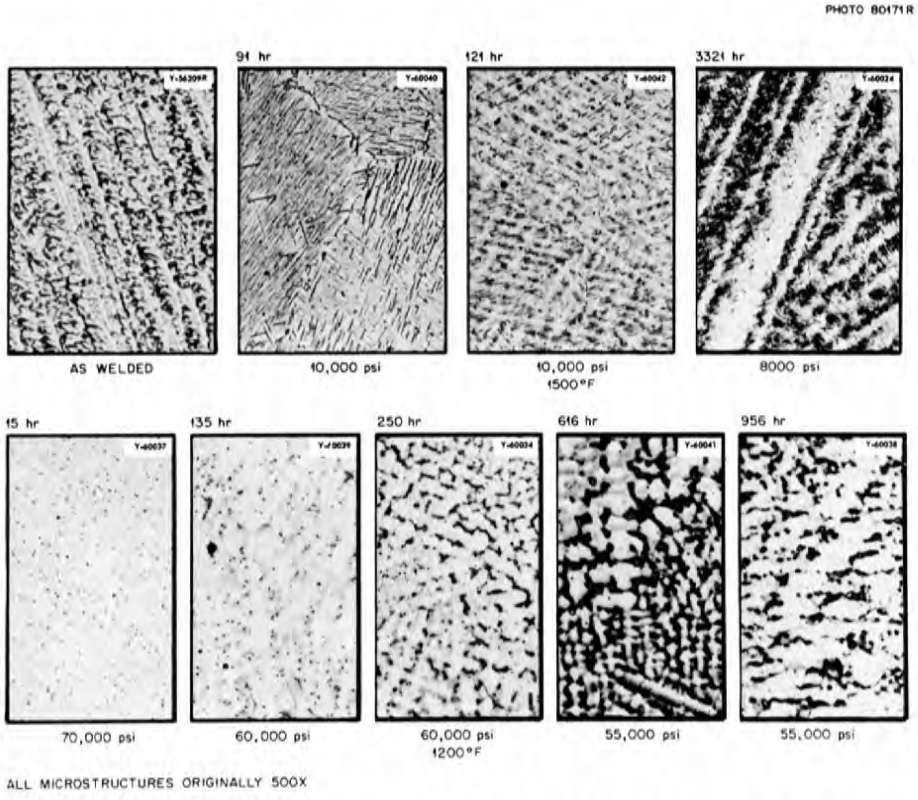

Fig. 10. Composite Showing the Microstructure of Electrode R-102 Weld Metal After Creep-Rupture Testing at 1200 and 1500°F. The applied stress and rupture time for the composite specimens are given for each microstructure. Etchant: H_3PO_4, H_2O electrolytic. 500×.

For example, Barker and Hischemiller observed the excellent stability of the IN-102 alloy and reported no effect on its properties after 500 hr at 1300°F. The increase in microhardness or matrix-strengthening in Inconel Alloy 625 has been reported to be even greater than observed in these studies, although the loss in tensile ductility is not considered damaging.[3] X-ray diffraction data developed by Comprelli and Wolff show the presence of TiN and CbC containing some tantalum.[5] From a study of the alloy composition, the formation of a columbium-rich gamma prime (Ni_3Cb) matrix-precipitate is predicted.[6] Further studies by Comprelli and Lewis using fluorescence analysis indicated that this precipitate may not be Ni_3Cb but may, in fact, be Ni_3Cb with molybdenum in solution [$Ni_3(Cb,Mo)$] (Ref. 3). This precipitate is coherent with the face-centered cubic matrix and would cause strengthening at 1200°F. At 1500°F the precipitate transforms to the stable orthorhombic form of the gamma prime phase, appearing as a Widmanstätten platelet structure. The precipitation of this acicular pattern has been shown to indicate the onset of overaging.[7,8]

The microstructural changes observed for the R-102 electrode weld metal appear to be very similar to the behavior of Inconel 625, particularly at 1500°F. The overaged, Widmanstätten platelet structure of the gamma prime precipitate, shown in Fig. 10, coincides with the Inconel 625 structural changes under the same conditions. This electrode was intended to approximately match the composition of IN-102, but the slight compositional variation in columbium and iron contents seems to have caused more microstructural instability during thermal treatments than was exhibited by the base alloy. The microstructural change observed for the weld metal at 1200°F may result from the precipitation of the columbium-molybdenum carbide, (Cb,Mo)C.

The micrographs of Figs. 11 and 12 illustrate the microstructures of IN-102 and Inconel 625, respectively, after experiencing a simulated welding thermal cycle whose peak temperature was the nil-ductility point. The microstructure of the IN-102 alloy does not reveal any liquation after undergoing a peak temperature of 2280°F, but grain-boundary broadening is evident. As shown in Fig. 12, cycling to 2250°F results in a very small amount of liquation in Inconel Alloy 625, although no apparent damage, as revealed by the hot-ductility tests, was observed to occur.

CONCLUSIONS

The evaluation program conducted to evaluate these two solution-strengthened nickel-base alloys indicates that their weldabilities, in general, are quite good. The use of the shielded metal-arc welding process for joining these alloys under high restraint was demonstrated to be feasible.

Room-temperature and 1200°F tensile tests on transverse weld specimens indicated that both of these alloys possess good mechanical properties at each of the test temperatures. Stress-rupture tests performed at 1200 and 1500°F on similar specimens showed a good correlation with published data for the base metal and exhibited flat, logarithmic creep-rupture plots.

Hot-ductility experiments conducted on simulated heat-affected zone specimens revealed that the nil-ductility temperatures for Inconel Alloy 625 and IN-102 were 2250 and 2280°F, respectively. Good recovery of mechanical properties without any apparent grain-boundary liquation was observed after

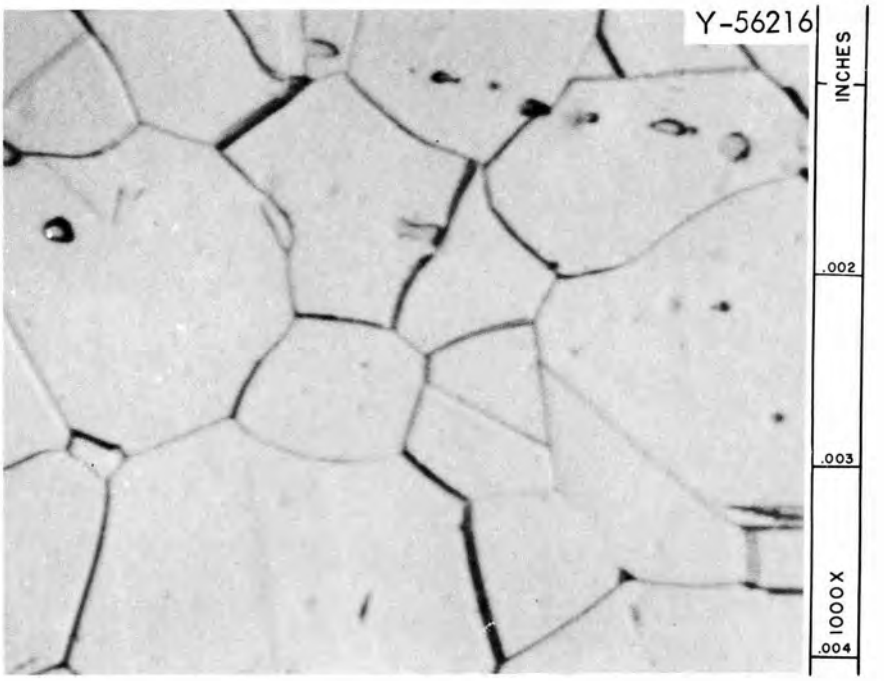

Fig. 11. Micrograph of IN-102 Structure After Experiencing a Simulated Welding Thermal Cycle with a Peak Temperature of 2280°F (NDT). No liquation is evident. Etchant: H_3PO_4, H_2O electrolytic.

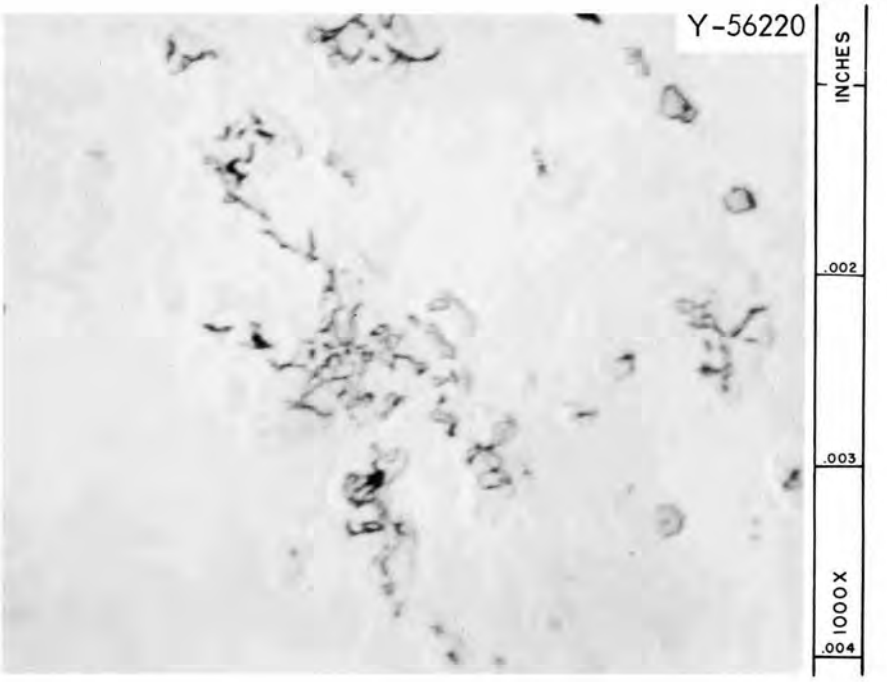

Fig. 12. The Structure of an Inconel Alloy 625 After Undergoing a Simulated Welding Thermal Cycle with a Peak Temperature of 2250°F (NDT). A small amount of liquation can be seen. Etchant: H_3PO_4, H_2O electrolytic.

cycling the IN-102 specimens to the nil-ductility temperature. Similar recovery of properties was observed for Inconel Alloy 625, although some liquation was seen at its nil-ductility temperature.

The microstructural stability of these compositions has been investigated at 1200 and 1500°F for extended periods of time. Under the test conditions included in this study, the microstructure and mechanical properties of IN-102 appear to be more stable than for Inconel Alloy 625 or weld metal from the R-102 electrode. This microstructure instability probably contributes to the lower creep ductility observed for Inconel Alloy 625 transverse weld specimens.

The good general weldability of these solid-solution strengthened alloys and the overall mechanical properties and integrity of the welded joints make them attractive for critical applications where high temperatures and stresses are required.

ACKNOWLEDGMENT

The authors wish to acknowledge the assistance of V. T. Houchin and T. R. Housley of the Fabrication Department, Plant and Equipment Division and R. G. Shooster and L. G. Bryson of the Welding and Brazing Laboratory for the welding and preparation of test specimens. The mechanical testing was performed under the direction of J. T. Venard of the Mechanical Property Group. E. R. Boyd of the Metallography Group did the metallographic services and Bette Thomas of the Reports Office prepared the manuscript.

REFERENCES

1. Private communication from M. A. Cordovi, International Nickel Company, May 1963.

2. E. F. Nippes et al., Welding J. 34(4), 183–185 (1955).

3. F. A. Comprelli and J. E. Lewis, Microstructural Evaluation of Superheater Cladding Materials, GEAP-4751 (January 1965).

4. J. F. Barker and P. E. Hischemiller, Preliminary Evaluation of IN-102 and Inconel 625, General Electric – Advanced Engine and Technology Dept., Rept. No. R63FPD406 (November 25, 1963).

5. F. A. Comprelli and U. E. Wolff, Stability of High-Nickel Alloys in Superheated Steam, GEAP-4745 (November 1964).

6. J. F. Barker and H. T. McHenry, 1400°F Weldable Sheet Program, General Electric – Flight Propulsion Division Program No. R63FPD33 (July 5, 1963).

7. M. Kaufman and A. E. Palty, Trans. Met. Soc. AIME 221, 1253 (1961).

8. C. H. Lund and H. J. Wagner, Identification of Microconstituents in Super Alloys, DMIC Memo 160, (November 15, 1962).

INTERNAL DISTRIBUTION

1–3. Central Research Library
4. ORNL – Y-12 Technical Library
Document Reference Section
5–24. Laboratory Records
25. Laboratory Records, RC
26. ORNL Patent Office
27. G. M. Adamson, Jr.
28. J. W. Arendt (K-25)
29. S. E. Beall
30. R. J. Beaver
31. G. E. Boyd
32. R. B. Briggs
33. D. A. Canonico
34. F. L. Culler, Jr.
35. J. E. Cunningham
36. J. H. Devan
37. R. G. Donnelly
38. D. A. Douglas, Jr.
39. C. W. Fox
40. A. P. Fraas
41. A. E. Franco-Ferreira
42. J. H Frye, Jr.
43. J. M. Googin (Y-12)
44. W. O. Harms
45–47. M. R. Hill
48. T. R. Housley
49. H. Inouye
50. C. F. Leitten, Jr.
51. H. G. MacPherson
52. R. W. McClung
53. D. L. McElroy
54. A. J. Miller
55. P. Patriarca
56. J. L. Scott
57–66. G. M. Slaughter
67. A. Taboada
68. J. W. Tackett
69. D. B. Trauger
70–72. P. W. Turner
73. A. M. Weinberg
74. J. R. Weir
75. G. D. Whitman
76. C. H. Wodtke

EXTERNAL DISTRIBUTION

77. C. M. Adams, Massachusetts Institute of Technology
78. J. D. Carey, Knolls Atomic Power Laboratory
79–80. D. F. Cope, AEC, Oak Ridge Operations
81–90. R. G. Gilliland, Massachusetts Institute of Technology
91. W. F. Savage, Rensselaer Polytechnic Institute
92–93. J. M. Simmons, AEC, Washington
94–95. M. J. Whitman, AEC, Washington
96. Division of Research and Development, AEC, ORO
97–111. Division of Technical Information Extension