CENTRAL RESEARCH LIBRARY
DOCUMENT COLLECTION

OAK RIDGE NATIONAL LABORATORY
operated by
UNION CARBIDE CORPORATION
NUCLEAR DIVISION
for the
U.S. ATOMIC ENERGY COMMISSION

UNION CARBIDE

OAK RIDGE NATIONAL LABORATORY LIBRARIES
3 4456 0549931 4

ORNL-TM-1560

60

ORMEF: A FORTRAN CODE FOR COMPUTING DETAIL MULTI-EFFECT MULTI-STAGE FLASH EVAPORATION DESALINATION PLANT DESIGNS

C. T. Mothershed

CENTRAL RESEARCH LIBRARY
DOCUMENT COLLECTION
LIBRARY LOAN COPY
DO NOT TRANSFER TO ANOTHER PERSON
If you wish someone else to see this document, send in name with document and the library will arrange a loan.

NOTICE This document contains information of a preliminary nature and was prepared primarily for internal use at the Oak Ridge National Laboratory. It is subject to revision or correction and therefore does not represent a final report.

LEGAL NOTICE

This report was prepared as an account of Government sponsored work. Neither the United States, nor the Commission, nor any person acting on behalf of the Commission:

A. Makes any warranty or representation, expressed or implied, with respect to the accuracy, completeness, or usefulness of the information contained in this report, or that the use of any information, apparatus, method, or process disclosed in this report may not infringe privately owned rights; or

B. Assumes any liabilities with respect to the use of, or for damages resulting from the use of any information, apparatus, method, or process disclosed in this report.

As used in the above, "person acting on behalf of the Commission" includes any employee or contractor of the Commission, or employee of such contractor, to the extent that such employee or contractor of the Commission, or employee of such contractor prepares, disseminates, or provides access to, any information pursuant to his employment or contract with the Commission, or his employment with such contractor.

ORNL-TM-1560

ORMEF: A FORTRAN CODE FOR COMPUTING DETAIL MULTI-EFFECT MULTI-STAGE FLASH EVAPORATION DESALINATION PLANT DESIGNS

The computer code described in this report was developed by the Operations Analysis Division of the Oak Ridge Gaseous Diffusion Plant for the ORNL Nuclear Desalination Program.

C. T. Mothershed

AUGUST 1966

OAK RIDGE NATIONAL LABORATORY
Oak Ridge, Tennessee
Operated by
UNION CARBIDE CORPORATION
for the
UNITED STATES ATOMIC ENERGY COMMISSION

OAK RIDGE NATIONAL LABORATORY LIBRARIES
3 4456 0549931 4

ORMEF: A FORTRAN CODE FOR COMPUTING DETAIL MULTI-EFFECT MULTI-STAGE FLASH EVAPORATION DESALINATION PLANT DESIGNS

ABSTRACT

A program has been written for the IBM-7090 computer which performs design calculations for the Oak Ridge Multi-Effect Flash (ORMEF) desalination plant. Designs can be computed for plants having between 1 and 25 effects, with each effect having a maximum of 99 stages.

The output of the code gives the process parameters, costs, geometry, and other design information of interest.

AUTHOR'S NOTE

The description of the code presented in this report represents the June, 1965, version of the computer program. The costs calculated by the code should be viewed as examples since the cost equations are being continually revised to agree with current cost estimates. In addition to the cost changes, the code has been programmed to make design calculations for the demister, deaerator and condenser tube bundle.

CONTENTS

Page

IDENTIFICATION 1

PURPOSE 1

RESTRICTIONS 1

Hardware 1
System 1

METHOD 2

Description of the Problem 2
Equations 5

1. Multi-Effect Multi-Stage Flash 5
2. TCVAL 5
3. GSC 7
4. STAGEG 8
5. Demister 15
6. PØWERU 20
7. CØSTS 22
8. DINTPL 27
9. BØPR 27

Nomenclature 28

1. Multi-Effect Multi-Stage Flash 28
2. TCVAL 28
3. GSC 30
4. STAGEG 31
5. Demister 34
6. PØWERU 36
7. CØSTS 37

USAGE 42

Input 42
Output 46
Operating Instructions 46
Example 47

CODING INFORMATION 47

Time Requirements 47
Flow Charts and Source Program 47

BIBLIOGRAPHY 121

ORMEF: A FORTRAN CODE FOR COMPUTING DETAIL MULTI-EFFECT MULTI-STAGE FLASH EVAPORATION DESALINATION PLANT DESIGNS

IDENTIFICATION

MULTI-EFFECT MULTI-FLASH: Distilled Seawater

Machine: IBM-7090 Language: FORTRAN II

Union Carbide Corporation
Nuclear Division
Oak Ridge Gaseous Diffusion Plant

PURPOSE

This program was built to compute the process parameters and design characteristics of the MEMS-type desalination plant.

The code output provides a detailed stage-to-stage heat and mass balance for each stage, as well as the overall temperature profile and flow rates. In addition, the output gives the geometry of the plant and the estimated cost.

RESTRICTIONS

Hardware

The code is written for the IBM-7090 with the following hardware:

on-line tape units - input-10, output-9, pool-A7
off-line card-to-tape
off-line tape-to-card
off-line tape-to-printer.

System

The code is written in FORTRAN II language with no programmed pauses or stops. The program consists of a main program with several subroutines. All input and output is by magnetic tape for use in monitor-type operations.

METHOD

Description of the Problem

The multi-effect multi-stage desalination plant is, basically, two or more one-effect plants operating in series. Figure 1 shows a schematic diagram of the ORMEF model which this program defines. The system receives heat through the brine heater from some external source. This heat supply is transferred from each effect to the following cooler effect and is finally rejected in the bottom or lowest temperature effect. Each effect contains a recovery and a reject section which operates in the same manner as a one-effect plant operates. The shell side brine flow into each effect is fed by the hot effect adjacent to it or by the brine heater. The tube side flow for each effect is fed from the adjacent cooler effect or from the ocean or coolant supply. The make-up flow is not concentrated until it is mixed with the recycle of the top effect just before entering the brine heater. The plant model requires a seawater pump, a make-up pump, a product pump, a blowdown pump and a recycle pump for each effect.

For identification, the effects have been numbered consecutively from 1 to E beginning with the highest temperature effect. The stages in each effect are also numbered consecutively from 1 to N beginning with the highest temperature stage of that effect. The plant reject section refers to the reject of the lowest temperature effect. The plant recovery section refers to all the sections of the evaporator, with the exception of the reject, of the lowest temperature effect.

The independent process and geometry variables for a case are:

a) number of effects
b) steam temperature
c) ocean or coolant temperature
d) plant blowdown temperature
e) maximum brine temperature of each effect

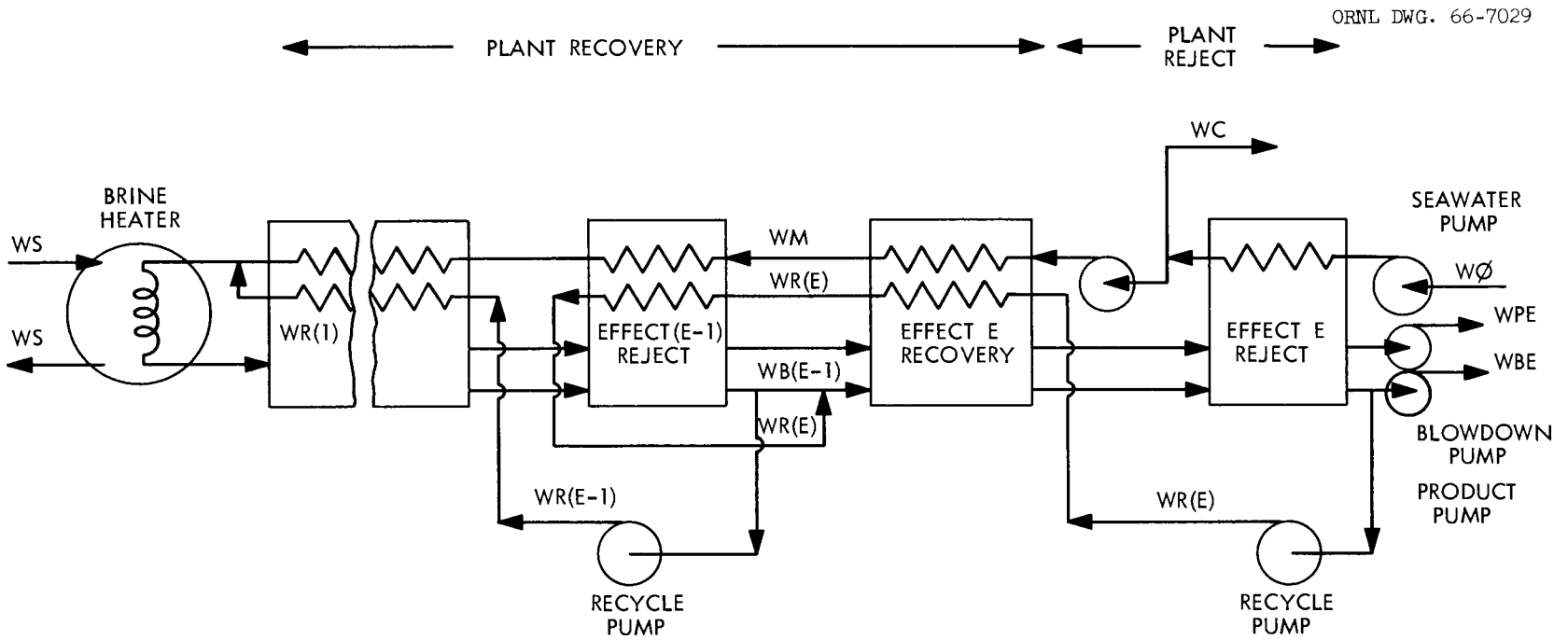

WBE - Plant Blowdown Flow Rate
WPE - Plant Production Rate
WC - Seawater Return Flow Rate
WØ - Seawater Intake Flow Rate
WR - Recycle Flow Rate
WM - Make-up Flow Rate

FIGURE 1. MULTI-EFFECT MULTI-STAGE FLASH PLANT

f) performance ratio of each effect*
g) number of stages in each effect
h) number of modules and plant levels
i) plant production rate
j) feed, blowdown and product salt concentrations
k) tray characteristics (vertical space between trays, level height, splash plate length)
l) intermediate tube sheet thickness
m) pumping heads and pump efficiency
n) tube diameters
o) heat transfer characteristics (tube metal thermal conductivity, fouling factors, flooding factors)
p) tube side brine velocities.

In addition, a number of other items such as unit costs, annual charge rates, etc, are read in and used in the cost calculations. These variables are itemized in USAGE.

The code will compute the temperatures, flows, geometry and costs for the plant defined by the above independent variables. No provisions for optimization have been built into the program.

At the time that the multi-effect code was proposed, the single-effect code was already operational. Since the single-effect plant is a special case of the multi-effect plant, the multi-effect code was written utilizing the single-effect plant code as a subroutine. As a result, there are calculations in the subroutine which are superfluous to the ORMEF code. These calculations were for optimization purposes and for providing a choice of independent variables. All of this coding which is not pertinent to ORMEF has been omitted from the written report, however, it does appear in the Fortran listing.

---

* The performance ratio of each effect is the ratio of the production rate of the effect (lb/hr) to the heat input to the brine heater (Btu/hr/1000).

Equations

1. Multi-Effect Multi-Stage Flash

$$CBE = (CR)(C\emptyset)$$

$$WPE = 0.344432 \times G$$

$$WBE = WPE\left(\frac{C\emptyset - CP}{CBE - C\emptyset}\right)$$

The assumed production of each effect is calculated as follows:

$$WPS(M) = RS(M) \times WPE/RPE$$

The product entering each effect from the effect above is given by:

$$WPIN(M) = \sum_{k=1}^{k=M-1} WPS(k)$$

After the calculations for each effect have been completed, the product rates are calculated with the following equations.

$$W\emptyset S(E) = \frac{WPE}{\frac{PS(1)}{QS(1)\times QS(2)\times\ldots QS(E)} + \frac{PS(2)}{QS(2)\times QS(3)\times\ldots QS(E)} + \cdots \frac{PS(E)}{QS(E)}}$$

$$WRS(E) = \frac{W\emptyset S(E)}{QS(E)} - (WPE + WBE)$$

$$W\emptyset S(M) = WRS(M+1) + WBE + WPE \qquad M < E$$

$$WPS(M) = PS(M)[WRS(M) + WPE + WBE]$$

These values for WPS are then compared to the assumed values to determine if the calculation is complete.

2. TCVAL

$$P = (THF - TB)/ACPSN$$

$$TCF = THF - \frac{1000P}{(RP)(CPBT)(1 + SSF1)}$$

$$Q = \frac{\frac{(AMBN)(P)}{CPTNK} - TCF + TB}{\frac{(CPTK)(TB-T\emptyset)}{CPTNK}}$$

$$WF = WP/P$$

$$W\emptyset = Q \times WF$$

$$PNK = (TCF-TB)/ACPTNK$$

$$TK = THF - (PNK)(ACPSNK)$$

$$CB = (CR)(C\emptyset)$$

$$WB = \frac{W\emptyset[CBS(M+1) - CCN(M+1)] - (WPIN(M) + WP)(CBS(M+1) - CP)}{CBS(M+1) - CBS(M)}$$

where M refers to the effect number. If the coldest effect (E) is being computed, then

$$CBS(M+1) = C\emptyset$$

$$CCN = C\emptyset$$

Otherwise these values are available from previous calculations.

$$WC = W\emptyset - WB - [WPIN(M) + WP]$$

$$WR = WF - WB - [WPIN(M) + WP]$$

$$CCF = \frac{[WF-WPIN(M+1)](CB) + (WP)(CP)}{WF - WPIN(M)}$$

$$RH\emptyset K = \frac{TK-TB}{NNK}$$

$$RH\emptyset NK = \frac{THF-TK}{NK}$$

$$SUMA = (NT\emptyset TAL)(THF-TA) - (NT\emptyset TAL-NNK)(NNK)(RH\emptyset NK) - (RH\emptyset NK)\sum_{k=1}^{k=NK-1} K - (RH\emptyset K)\sum_{k=1}^{k=NNK-1} k$$

$$SMAQ = (WF)(CPBT)(THF-TCF)(FFHL)$$

$$CBS(M-1) = \frac{[WBE+WPE-WPIN(M)-WPS(M)]CBS(M)+WPS(M)\times CP}{WBE+WPE-WPIN(M)}$$

$$TBS(M-1) = \frac{(WR)(HE1-HE2) - [WBE+WPE-WPIN(M)](HE3-HE1)}{[WBE+WPE-WPIN(M)](CPBM)} + THF$$

where $CPBM = \frac{(HE4-HE3)}{TBS(M-1) - THF}$

HE1 = enthalpy at THF and CCF

HE2 = enthalpy at THF and CB(M)

HE3 = enthalpy at THF and CBS(M-1)

HE4 = enthalpy at TBS(M-1) and CBS(M-1)

$$TV1 = TBS(M-1) - BPR - DTPD$$

where BPR = boiling point rise at TB(M-1) and CBS(M-1)

Note: The nonsubscripted variables apply to the effect being computed.

3. GSC

This subroutine calculates the temperature and flow balance for each stage and the overall physical properties used in TCVAL. The independent variables involved in the heat and mass balance for a stage are TS1, TV1, SMT2, WS1, WP1, WT, WT1, WT2, CTT1, CTT2, C and RHØ. These variables are assigned values as follows:

Recovery:

$$WT = WF$$
$$WT1 = WT - (WBE+WPE)$$
$$WT2 = WT - WT1$$
$$CTT1 = CTT2 = CCF \qquad M = 1$$
$$\left.\begin{array}{l} CTT1 = CB \\ CTT2 = C\emptyset \end{array}\right\} M > 1$$
$$RH\emptyset = RH\emptyset NK$$

Reject:

$$WT = W\emptyset$$
$$WT1 = WT - (WBE+WPE)$$
$$WT2 = WT - WT1$$
$$CTT1 = CTT2 = C\emptyset \qquad M = 1$$

	CTT1	=	CB(M+1)] M > 1
	CTT2	=	CØ] M > 1
	RHØ	=	RHØK
Stage 1:	TS1	=	THF
	SMT2	=	TCF
	WS1	=	WF - WPIN(M)
	WP1	=	WPIN(M)
	C1	=	CCF
	TV1	=	calculated in TCVAL
Remaining Stages:	TS1(N)	=	TS2(N-1)
	TV1(N)	=	TV2(N-1)
	SMT2(N)	=	SMT1(N-1)
	WS1(N)	=	WS2(N-1)
	WP1(N)	=	WP2(N-1)

The calculations for each stage are done in ascending order, beginning with the hottest stage (stage 1) of the effect. The calculation procedure for each stage has been outlined in the single-effect code report. The procedure for this code is the same, with the following exception:

$$CPT = \frac{(CPT1)(WT1) + (CPT2)(WT2)}{WT}$$

where $CPT1 = f\left[SMT2 - \frac{TS1-TS2}{2}, \quad CTT1\right]$

and $CPT2 = f\left[SMT2 - \frac{TS1-TS2}{2}, \quad CTT2\right]$

4. STAGEG

This program calculates the geometry necessary to estimate the cost of the plant. In addition, a number of other design characteristics are calculated for output.

Overall Heat Transfer Coefficient:

The film coefficient on the tube side is calculated using a correlation of the data for forced convection by Sieder and Tate.

$$h_i = \frac{0.027 C_{P_b} GF}{\left(\frac{\mu C_P}{k}\right)^{2/3} \left(\frac{\mu_w}{\mu_b}\right)^{0.14} \left(\frac{GD}{\mu_b}\right)^{0.2}} \qquad (1)$$

C_P - specific heat

μ - absolute viscosity

k - thermal conductivity

D - tube inside diameter

GF - mass flow rate.

The subscripts b and w refer to the temperature at which the particular fluid is evaluted; w refers to wall temperature, b refers to bulk temperature.

The condensing film coefficient is calculated using a corrected form of the Nusselt equation for condensation on vertical banks of horizontal tubes. The correction factor was correlated with data from the University of Michigan.*

$$\text{Correction Factor } (C\emptyset RF) = 1.23795 + 0.0353608 \times S - 0.00157035 \times S^2 \qquad (2)$$

$$h_o = 0.728\ (C\emptyset RF) \sqrt[4]{\frac{g\rho^2 k^3 h'_{fg}}{DS\mu\Delta T}} \qquad (3)$$

where $h'_{fg} - h_{fg} + 0.375\ C_P\ \Delta T$

h_{fg} - heat of vaporization

ρ - condensate density

g - gravitational acceleration

ΔT - temperature drop across condensate film

S - number of tubes in a vertical bank

---

* Briggs, D. E. and Young, E. H., The Condensing of Low Pressure Steam on Horizontal Titanium Tubes, The University of Michigan, Department of Chemical and Metallurgical Engineering Heat Transfer Laboratory, Report No. 55, December 1963.

D - tube outside diameter

C_P - specific heat of condensate.

The correction factor (CØRF) is held constant at its value for S = 10 whenever S exceeds 10.

The overall heat transfer coefficient based on the outside tube area is calculated using the equation for heat flow through a cylindrical wall.

$$1/\overline{U} = \frac{D_o}{D_i h_i} + \frac{D_o}{24k_T} \ln\left(\frac{D_o}{D_i}\right) + R + \frac{1}{h_o} \tag{4}$$

$\overline{U}$ - overall heat transfer coefficient

D - tube diameter

h - film coefficient

k_T - tube metal thermal conductivity

R - fouling factor, a factor expressing the resistance to heat flow resulting from scaling on the inside of the tubes and noncondensable buildup on the outside of the tubes.

The subscripts o and i refer to the outside and inside of the tube, respectively.

Since the heat rate through the condensing and convective films must be equal to the overall heat rate, equations (5) and (6) must be satisfied.

$$\Delta T = \overline{U}\theta/h_o \tag{5}$$

$$T_w = \frac{\overline{U}\theta D_o}{h_i D_i} + T_b \tag{6}$$

where θ - overall log-mean temperature difference

T_w - tube inside wall temperature

T_b - tube side bulk temperature.

The solution of equations (1) through (6) requires an iterative procedure. First, two assumptions are made.

Assumptions:

1. $T_w = 0.65(T_c - T_b) + T_b$
2. $\Delta T = 0.35(T_c - T_b)$

where T_c is the condensing temperature.

Iteration:

Step 1 h_i, h_o and $\bar{U}$ are calculated using equations (1) through (4).

Step 2 ΔT and T_w are calculated using equations (5) and (6).

Step 3 ΔT and T_w calculated in Step 2 are checked against their assumed values. If they do not check, the values are replaced with the calculated values and control is returned to Step 1. When the assumed values check the calculated values, the calculation is complete.

This above heat transfer calculation is used to calculate the coefficients for each stage and for the brine heater.

Stage heat transfer calculations:

T_c = TV2

T_b = (SMT2-SMT1)/2.

θ = ØM = $(\text{SMT2-SMT1})/\ln\left(\frac{\text{TV2-SMT1}}{\text{TV2-SMT2}}\right)$

Initialization:

GE = 3600 × RHØE1 × VE

For M < IE

Recovery: RHJ = RHØNK

GF = GE

DØ = DØE

DI = DIE

KT = BIKTE

S = SE

V = VE

$$R = 0.001 + \frac{(RE-0.001)(I-1)}{5} \qquad M = 1,\ n < 5$$

$$R = RE \qquad M = 1,\ n > 5$$

$$R = RE \qquad M > 1.$$

Reject: RHJ = RHØK

GF = GE(M+1)

DØ = DØE

DI = DIE

KT = BIKTE

S = SE

V = VE

R = RE

For M = IE

Recovery: RHJ = RHØNK

GF = GE

DØ = DØE

DI = DIE

BIKT = BIKTE

S = SE

V = VE

R = RE

Reject: RHJ = RHØK

GF = 3600 × RHØR1 × VR

DØ = DØR

DI = DIR

BIKT = BIKTR

S = SR

V = VR

R = RSR.

Heater heat transfer calculations:

$$T_c = TS$$
$$T_b = (THF + TCF)/2$$
$$\theta = THM = (THF - TCF)/\ell n \left(\frac{TS-TCF}{TS-THF}\right)$$
$$D\emptyset = D\emptyset H$$
$$DI = DIH$$
$$KT = BIKTH$$
$$S = SH$$
$$V = VH$$
$$R = RSH$$
$$GF = GH = 3600 \times VH \times RH\emptyset H1$$

Stage condenser geometry:

$$AS = QH/UBAR \times \emptyset M$$

$$SLS = \frac{12 \times AS \times DI^2 G}{576 \times D\emptyset \times WT}$$

Volume flow of each stage's fresh water production:

$$CFMWV = \frac{WV}{60 \times TS2} \exp\left[12.4636-0.021987(TS2)+1.8849\times10^{-5}(TS2)^2\right]$$

Volume of product water reflashed:

$$CFMWZ = \frac{WP1(HP1-HP2)}{60(HV+HP2)TV2} \exp\left[12.4632-0.021987(TV2)+1.8849\times10^{-5}(TV2)^2\right]$$

where

$$HV = 1061.655+0.43095TV2+1.2819\times10^{-4}TC2^2-0.8824\times10^{-6}TV2^3$$

Tray characteristics:

$$TRAYLH = SLS + \frac{TSTH}{12} - 0.5$$

$$VVEL = \frac{CFMWV}{120\times TRAYLH\times FREBD\times AM\emptyset DU\times ALEV}$$

$$TRAYFL = \frac{[12\ TWFA\ TRAYLH-3.6-0.63SPL]10^4}{\left[\frac{610}{TS1+459.69}\right]^{3.12}\left[\frac{RH\emptyset}{3}\right]^{0.6}} + 85{,}000\ .$$

If TRAYFL is greater than 500,000, then TRAYFL is set equal to 500,000.

$$WBS = WS1/(AMØDU \times ALEV)$$

$$TRAYWD = WBS/TRAYFL$$

$$RESIDT = \frac{3600 \times TRAYWD \times TRAYLH \times BDEPH \times RHØRES}{WBS}$$

$$PV = 2.1786818-0.70443622(10^{-1})TV2+0.93941286(10^{-3})TV2^2 -0.53958083(10^{-5})TV2^3+0.18139197(10^{-7})TV2^4$$

$$DELP = PV_n - PV_{n-1}$$

Recovery:

$$DPREQ = \frac{CL}{9266.112 \times RHØB}\left[\frac{WS1}{3600 \times WTME \times (BDEPH-0.25) \times AMØDU \times ALEV}\right]^2$$

Reject:

$$DPREQ = \frac{CL}{9266.112 \times RHØB}\left[\frac{WS1}{3600 \times WTMR(BDEPH-0.25) \times AMØDU \times ALEV}\right]^2$$

$$A = \frac{TRAYFL \times TRAYWD}{3600CØEFA\sqrt{9273.6 \times DENBR \times DELP}}$$

$$ORHT = A/TRAYWD$$

$$WS = WF(THF-TCF)/CPBT(1+SSF1)(1093.88-0.5703TS + 1.2819(10^{-4})TS^2-0.8824(10^{-6})TS^3)$$

$$BARØM = \sum_{I=1}^{I=NTØTAL} ØM(I)/NTØTAL$$

Heater geometry:

$$AH = \frac{(HHF-HCF)(WF)}{UBAR \times THM}$$

$$HLH = \frac{12 \times AH \times DIH^2 \times GH}{576(DØH)(WF)}$$

$$HNH = \frac{12(AH)}{\pi(DØH)(HLM)}$$

5. Demister

If either UALP or UMAX = 0, the demister calculations are omitted. Demister calculations for each stage:

$$TSAVG = \frac{TS(I)+TS(I+1)}{2}$$

$$TSAVE = TSAVG + 459.69$$

$$CAVE = \frac{C(I) + C(I+1)}{2}$$

$$GDM = \frac{WV}{(AM\emptyset DU)(ALEV)(SLS)(TRAYWD)}$$

$$BIGTE = TSAVE-BPR$$

$$PS = Exp\left[14.150119 - \frac{6452.5621}{BIGTE} - \frac{837533.21}{(BIGTE)^2}\right]$$

$$VG = \frac{10.729 \times TSAVE}{18.015 \times PS}$$

$$XDM = (GDM)^3(VG)^2 \times 10^{-8}$$

If $\ell n(XDM) < 4.4$

$$EINDM = Exp\ [8.941-0.1570\ \ell n(XDM)]$$

If $\ell n(XDM) \geq 4.4$

$$EINDM = Exp\ [4.42+0.870\ \ell n(XDM)]$$

Set $XLDM = 0.333$

$$EFFDM = 1.0 - \frac{100}{(EINDM)(CAVE)}$$

If $EFFDM \leq 0$

Set AREADM = 0.0

DPTDM = 0.0

DTDM = 0.0

EØUTMX = (EINDM)(CAVE)

No demister is required.

If EFFDM > 0

$$VL = \frac{1.0}{\rho(TSAVG, CAVE)}$$

$$XY\emptyset RK = \ln\left[EINDM \times 10^{-6} \times \frac{VL}{VG}^{1/2}\right]$$

$$YY\emptyset RK = \text{Exp}\ [-4.99499+(-0.725195-0.0301573 \times XY\emptyset RK)(XY\emptyset RK)]$$

$$UPL = \frac{VIS(TSAVG, CAVE)}{2.42}$$

$$UY\emptyset RK = \left[\frac{YY\emptyset RK(32.2)(0.99)^3 VG}{46 \times VL(UPL)^{0.2}}\right]^{0.5}$$

If UYØRK > UMAX

Set UYØRK = UMAX

$$UDMIN = UY\emptyset RK$$

$$AREADM = \frac{(WV)(VG)}{(AM\emptyset DU)(ALEV)(3600.)(UDMIN)}$$

$$ADMMAX = SLS \times TRAYWD$$

If AREADM > ADMMAX

Write out AREADM > ADMMAX

SET AREADM = ADMMAX

$$UDMIN = \frac{WV \times VG}{(AM\emptyset DU)(ALEV)(3600.)(AREADM)}$$

$$ALPDM = (0.666)\ \ln\ (UDMIN) - 0.656$$

$$E\emptyset UTDM = (EINDM)\ \text{Exp}\ [(ALPDM)(XLDM)(-1.0)]$$

$$C\emptyset UTDM = E\emptyset UTDM \times CAVE$$

$$EFFDM = 1.0 - \frac{E\emptyset UTDM}{EINDM}$$

If AREADM $\leq$ ADMMAX

$$SUMDMA = SUMDMA + AREADM$$

$$UG = 10^{-5}[0.122 + 1.001 \times 10^{-3}TSAVE + 2.892 \times 10^{-7}TSAVE^2 - 7.693 \times 10^{-11}TSAVE^3]$$

$$WIDDM = AREADM/SLS$$

$$ANREDM = \frac{UDMIN}{(46)(VG)(UG)}$$

$$FFDM = Exp\ [0.450494](ANREDM)^{-0.2747}$$

$$DPDDM = \frac{(FFDM)(XLDM)46.0(UDMIN)^2}{(144.)(32.2)VG(0.99)^3}$$

$$XDPL = \frac{UDMIN}{\left(\frac{VG}{VL} - 1.0\right)^{0.5}}$$

$$XLIQDM = \frac{(WV)EINDM \times 10^{-6}}{(ALEV)(AMØDU)(AREADM)}$$

$$DPWDM = 0.0361 \times Exp(0.573379) \times XDPL^{2.6583}XLIQDM^{0.14847}$$

$$DPTDM = DPDDM + DPWDM$$

$$PØUTDM = PS - DPTDM$$

$$TØUTDM = \frac{A}{B + [C+Dx(E-\ln X)]^{1/2}} - 459.69$$

where $A = 1675066.42$ $C = 41635557.0$ $E = 14.150119$
$B = -6452.5621$ $D = 3353132.8$ $X = PØUTDM$

$$TSP = \frac{A}{B + [C+Dx(E-\ln X)]^{1/2}} - 459.69$$

where A, B, C, D, and E are same as for TØUTDM.

$$X = PS$$

$$DTDM = TSP - TØUTDM$$

$$DTPDPS = DTPDP$$

$$DTPDP = DTPDS + DTDM$$

$$WVST = \frac{WV}{(AMØDU)(ALEV)}$$

ALPDM = 0.666 x $\ln$(UALP) - 0.656 UYØRK > UALP

ALPDM = 0.666 x $\ln$(UYØRK) - 0.656 UYØRK $\leq$ UALP

EØUTDM = EINDM x Exp [-12.0(ALPDM)(XLDM)]

$$\text{CØUTDM} = \frac{\text{EØUTDM} \times 10^{-6} \times \text{CAVE}}{1.0 + \text{EØUTDM} \times 10^{-6}}$$

WPRØDM = (WVST)(1.0 + EØUTDM $\times 10^{-6}$)

SMPRD = WPRØDM for Stage 1

WSALT = (WPRØDM)(CØUTDM)

SMSALT = WSALT for Stage 1

SMPRD(I) = SMPRD(I-1) + WPRØDM(I) for stage > 1

SMSALT(I) = SMSALT(I-1) + WSALT(I)

CPRØD = SMSALT/SMPRD

At this point, a calculation for each stage has been completed, with a demister on each of the stages. The following calculations take the demisters off the top stages until the salt concentration of the product is greater than or equal to 100×10^{-6}.

Demister removal calculation (done for each stage):

If CPRØD(NTØTAL) < 100×10^{-6}

Set DTDM = 0
SUMDMA = 0
AREADM = 0
DPTDM = 0
DTDM = 0
DTPDP = DTPDS
WPRSAV = WPRØDM
WSALSV = WSALT
EØUTDM = EINDM

$$CNCSAV = \frac{C(I) + C(I+1)}{2}$$

$$C\emptyset UTDM = \frac{(EINDM) \times 10^{-6}\ (CNCSAV)}{1.0 + EINDM \times 10^{-6}}$$

$$WPR\emptyset DM = WVST\ (1.0 + E\emptyset UTDM \times 10^{-6})$$

$$WSALT = (WPR\emptyset DM)(C\emptyset UTDM)$$

For Stage 1

$$SMSALT = WSALT$$

$$SMPRD = WPR\emptyset DM$$

For Stage > 1

$$SMSALT(I) = SMSALT(I-1) + WSALT(I)$$

$$SMPRD(I) = SMPRD(I-1) + WPR\emptyset DM$$

$$CPR\emptyset D = \frac{SMSALT}{SMPRD}$$

$$SMSALT(NT\emptyset TAL) = SMSALT(NT\emptyset TAL) + WSALT(I) - WSALSV$$

$$SMPRD(NT\emptyset TAL) = SMPRD(NT\emptyset TAL) + WPR\emptyset DM(I) - WPRSAV$$

$$CPR\emptyset D(NT\emptyset TAL) = \frac{SMSALT(NT\emptyset TAL)}{SMPRD(NT\emptyset TAL)}$$

If $CPR\emptyset D(NT\emptyset TAL) > 100 \times 10^{-6}$

$$WPR\emptyset DM = WPRSAV$$

$$WSALT = WSALSV$$

$$SMPRD(K) = SMPRD(K-1) + WPR\emptyset DM(K)$$

$$SMSALT(K) = SMSALT(K-1) + WSALT(K)$$

$$CPR\emptyset D(K) = \frac{SMSALT(K)}{SMPRD(K)}$$

$$SUMDMA = SUMDMA + AREADM(K)$$

Cost of demisters:

$$\text{CØSTDM} = (\text{SUMDMA})(10.5)(\text{ALEV})(\text{AMØDU})\,\frac{(\text{XLDM})}{0.25}\ .$$

6. PØWERU

$$\text{AMBDAS} = 1093.88 - 0.5703\ (\text{TSTEM}) + 1.2819 \times 10^{-4}(\text{TSTEM}^2) - 0.8824 \times 10^{-6}(\text{TSTEM}^3)$$

$$\text{RLR} = \sum_{I=NK+1}^{I=NTØTAL} \text{SLS}(I) + \frac{(\text{NNK})(\text{TSTH})}{12}$$

$$\text{RNR} = \sum_{I=NK+1}^{I=NTØTAL} Z(I)/(\text{NNK})$$

$$\text{UBARR} = \frac{\sum_{I=NK+1}^{I=NTØTAL} \text{UBAR}(I) \times \text{AS}(I)}{\sum_{I=NK+1}^{I=NTØTAL} \text{AS}(I)}$$

$$\text{ELE} = \sum_{I=1}^{I=NK} \text{SLS}(I) + \frac{(\text{NK}-1)(\text{TSTH})}{12}$$

$$\text{ENE} = \frac{\sum_{I=1}^{I=NK} Z(I)}{\text{NK}}$$

$$\text{UBARE} = \frac{\sum_{I=1}^{I=NK} \text{UBAR}(I) \times \text{AS}(I)}{\sum_{I=1}^{I=NK} \text{AS}(I)}$$

$$AE = \frac{\pi \times D\emptyset E \times ELE \times ENE}{12}$$

$$AR = \frac{\pi \times D\emptyset \times RLR \times RNR}{12}$$

where $D\emptyset = D\emptyset E \quad M < IE$

$D\emptyset = D\emptyset R \quad M = IE$

$$UBARA = \frac{\sum_{I=1}^{I=NT\emptyset TAL} UBAR(I) \times AS(I)}{AE + AR}$$

Surface area cost:

$CTUBER(M) = AR \times SMA1 \quad M < E$

$CTUBER(M) = AR \times SMA2 \quad M = E$

$ENITSE = NK \quad D\emptyset < 1$

$ENITSE = 2 \times NK - 1 \quad D\emptyset \geq 1$

$ENITSR = NNK \quad D\emptyset < 1$

$ENITSR = 2 \times NNK - 1 \quad D\emptyset \geq 1$

$$APTSE = \frac{3.8191 \times D\emptyset E^2 \times ENE}{288 \times ALEV \times AM\emptyset DU} + 3 \times HST$$

$$CITSE = 2 \times ALEV \times AM\emptyset DU \times ENITSE \left[7.343 \times APTSE + \frac{ENE \times CDITS}{2 \times ALEV \times AM\emptyset DU} \right]$$

$$CETSE = 4 \times ALEV \times AM\emptyset DU \left[44.772 \times APTSE + \frac{ENE \times CDETS}{2 \times ALEV \times AM\emptyset DU} \right]$$

$CTUBEE(M) = AE \times SMA1$

$$APTSR = \frac{3.8191 \times D\emptyset^2 \times RNR}{288 \times ALEV \times AM\emptyset DU} + 3 \times HST$$

$$CITSR = 2 \times ALEV \times AM\emptyset DU \times ENITSR \left[7.343 \times APTSR + \frac{RNR \times CDITS}{2 \times ALEV \times AM\emptyset DU} \right]$$

$$CETSR = 4 \times ALEV \times AM\emptyset DU \left[44.722 \times APTSR + \frac{RNR \times CDETS}{2 \times ALEV \times AM\emptyset DU} \right]$$

7. CØSTS

Heads and Power

$$HDEL = HD + HR + \frac{6 \times SMALLF(DIR,VR) \times RLRS(I) VR^2}{DIR \times 32.174}$$

$$PØDEL = \frac{3.7676768 \times 10^{-10} \times HDEL \times WØS(E)}{SMALLE}$$

$M > 1$

$$HREC(M) = HE + \frac{6 \times SMALLFF(DIE,VE)[ELES(M)+RLRS(M-1)]VE^2}{DIE \times 32.174} + HS1S(M)$$

$$PØREC(M) = \frac{3.7676768 \times 10^{-10} \times HREC(M) \times WRS(M)}{SMALLE}$$

$M = 1$

$$HREC(M) = HE + HH + HS1S(M) + \frac{6 \times SMALLFF(DIE,VE) \times ELES(M) \times VE^2}{DIE \times 32.174}$$

$$+ \frac{6 \times SMALLFF(DIH,VH) \times HLH \times VH^2}{DIH \times 32.174}$$

$$PØREC(M) = \frac{3.7676768 \times 10^{-10} \times HREC(M)[WFS(M)-WBE-WPE]}{SMALLE}$$

$$HMKUP = HE+HS1S(1)+HH+ \frac{6 \times SMALLFF(DIE,VE)\left\{\sum_{M=2}^{M=E} ELES(M) + \sum_{M=1}^{M=E-1} RLRS(M)\right\} VE^2}{DIE \times 32.174}$$

$$+ \frac{6 \times SMALLFF(DIH,VH) \times HLH \times VH^2}{DIH \times 32.174}$$

$$PØMKUP = \frac{3.7676768 \times 10^{-10} \times HMKUP[WPE+WBE]}{SMALLE}$$

$$PØBLD = \frac{3.7676768 \times 10^{-10} \times HBL \times WBE}{SMALLE}$$

$$PØPRD = \frac{3.7676768 \times 10^{-10} \times HPR \times WPE}{SMALLE}$$

$$PØ3 = \frac{(WPE+WBE)\ e^{(0.013TBE-6.121)}}{346670}$$

$$PØ = PØDEL + PØMKUP + \sum_{M=1}^{M=E} HREC(M) + PØBLD + PØPRD + PØ3$$

Flow Rates and Costs

$$WMAKUP = (WPE + WBE)/480$$

$$WRECØV = \sum_{M=1}^{M=E} WFS(M)/(E \times 480)$$

$$WBLØW = WBE/480$$

$$WPRØD = WPE/480$$

$$WREJCT = WØS(IE)/480$$

$$WPUMP = \frac{WØS(1) + WBE + WPE + WFS(1)}{480} \qquad M = 1$$

$M > 1$

$$WPUMP = \frac{\left[WØS(E) + 2(WBE+WPE) + \sum_{M=1}^{M=E} WRS(M) - WRS(1) + WFS(1) \right]}{480}$$

Chemical Cost

$$TNACDY = 15.68(CØ) \left(\frac{CR}{CR-1}\right) G \times 10^{-6}$$

$$ACID = 1000 + 32000(ACACID)(TNACDY)^{0.686} + 12000(TNACDY)^{0.3} + 8.39(TNACDY)(365)(LFACID) \qquad \frac{G}{10^6} > 25 .$$

$$ACID = 9125(LFACID)(TNACDY) \qquad \frac{G}{10^6} \leq 25$$

$$CLØRIN = 363.5 \times 10^{-6}\ [0.25WØS(E)+WPE]F$$

$$CAUSTC = 146.117 \times 10^{-6}\ GF \left(\frac{CR}{CR-1}\right)$$

$$DEFØM = 608.82 \times 10^{-6}\ GF \left(\frac{CR}{CR-1}\right)$$

$$CC2 = ACID + CLØRIN + CAUSTC + DEFØM \qquad \$/year$$

$$UNCHEM = CC2/WMAKUP$$

Deaerator Cost

$$DEACS1 = \frac{8500\ (WBE+WPE)}{0.34667 \times 10^6\ T_{BE}^{0.26}}$$

$$UDEAWM = DEACS1/WMAKUP$$

$$DEACS2 = 16150(PØ3)$$

$$UDEAHP = DEACS2/(1000PØ3/0.746)$$

Pump Cost

$$PMCFLØ = [0.54+0.00175(HDEL)](WREJCT)+\sum_{M=2}^{M=E} [0.9+0.00175(HREC(M))]\frac{WR(M)}{480}$$

$$+[0.9+0.00175(HREC(1))]\frac{WFS(1)}{480} + [0.63+0.00175(HBL)](WBLØW)$$

$$+[0.6+0.00175(HPR)](WPRØD)+[0.54+0.00175(HMKUP)]WMKUP$$

$$UNPUMP = PMCFLØ/WPUMP$$

Motor Cost

$$PMCPØ = \frac{10^3}{0.746}\left[20.57(PØDEL+PØMKUP+PØBLD+PØPRD)+20.98\sum_{M=1}^{M=E} PØREC(M)\right]$$

$$UNDRVE = PMCPØ/(1000 \times (PØ-PØ3)/0.746)$$

Electrical Cost

$$EEC = 7.69 \times 10^3 (P\emptyset)/0.746$$

$$UNELCT = EEC/(P\emptyset \times 1000) \quad \text{or} \quad 10.3$$

Valves and Piping Cost

$$VPC = [0.8854-0.017846(ALEV)](WREC\emptyset V)+[0.50969-0.0049231(ALEV)](WREJCT) +[0.70854-0.024385(ALEV)](WPR\emptyset D)+[0.0074615(ALEV)+0.24315](WBL\emptyset W) +[0.0033076(ALEV)+0.17677](WMAKUP)$$

$$UNPIPE = VPC/WREC\emptyset V$$

Water Intake Cost

$$WAIT = 0.5(WREJCT)$$

$$UINTAK = WAIT/WREJCT$$

Site Cost

$$SITE = 10^3 (WREJCT)^{0.6}$$

$$UNSITE = SITE/WREJCT$$

Area Cost and Heater Shell

$$UNARAE = SMA1$$

$$UNARAR = SMA2$$

$$UNARHT = A3$$

$$UNSHHT = A4$$

Cost of Adding a Stage

$$USHELN = \frac{\sum_{M=1}^{M=IE} [CITSE(M) + CITSR(M) + CETSE(M) + CETSR(M)]}{\sum_{M=1}^{M=E} ANS(M)}$$

Evaporator Shell Cost

$$UNSHELV = 1.474 - 0.0185 \times ALEV$$

Operating, Maintenance and Miscellaneous Cost

$$UNMSCL = \frac{10^6 + 0.0063G}{WPRØD}$$

$$UNØPR = \frac{0.13 \times 10^6 \left(\frac{G}{10^6}\right)^{0.267}}{WPRØD}$$

$$UNMAIN = 0.0017$$

$$CC2 = UNCHEM \times WMAKUP$$

$$DEACST = UDEAWM \times WMAKUP + UDEAHP \times 1000 \times PØ3/0.746$$

$$PMC = UNPUMP \times WPUMP + UNDRVE \times 1000 \times (PØ-PØ3)/0.746$$

$$EEC = UNELCT \times PØ \times 1000$$

$$VPC = UNPIPE \times WRECØV$$

$$WAIT = UINTAK \times WREJCT$$

$$SITE = UNSITE \times WREJCT$$

$$EA = UNARAE \times \left[\sum_{M=1}^{M=E} AEC(M) + \sum_{M=1}^{M=E-1} ARS(M)\right] + UNARAR \times ARS(E)$$

$$BHC = UNARHT \times AH + UNSHHT \times AH$$

$$ES = (USHELV) \sum_{M=1}^{M=E} VØLMS(M) + (USHELN) \sum_{M=1}^{M=E} ANS(M)$$

$$CIBC = UNMSCL \times WPRØD$$

$$ØC2 = UNØPR \times WPRØD$$

$$CD = \frac{PMC+SITE+WAIT+EA+ES+VPC+DEACST+EEC+BHC+CIBC}{10^6}$$

CAPI1 = CD × 10^6 × AJ

CAPI2 = CAPI1/G

CAPI3 = (SMALLP x CAPI1)/(0.365FG)

AMSC2 = UNMAIN x CAPI1

PØCST1 = 24 × 10^6(SMALLD)(PØ)/G

PØCST2 = 0.365FG (PØCST1)

HC1 = (24.)(SMALLB)(WPE)(RPE × G)

HC2 = 0.365FG (HC1)

CC1 = CC2/(0.365FG)

ØC1 = ØC2/(0.365FG)

AMSC1 = AMSC2/(0.365FG)

DAJ = (SMALLP)(AJ)

DEA2	=	(DEACST)(PAJ)	DEA1	=	DEA2/(0.365FG)
PMC2	=	(PMC)(PAJ)	PMC1	=	PMC2/(0.365FG)
EEC2	=	(EEC)(PAJ)	EEC1	=	EEC2/(0.365FG)
VPC2	=	(VPC)(PAJ)	VPC1	=	VPC2/(0.365FG)
WAIT2	=	(WAIT)(PAJ)	WAIT1	=	WAIT2/(0.365FG)
SITE2	=	(SITE)(PAJ)	SITE1	=	SITE2/(0.365FG)
EA2	=	(EA)(PAJ + SMAPPP)	EA1	=	EA2/(0.365FG)
ES2	=	(ES)(PAJ)	ES1	=	ES2/(0.365FG)
CIBC2	=	(CIBC)(PAJ)	CIBC1	=	CIBC2/(0.365FG)
BHC2	=	(BHC)(PAJ)+(SMAPPH)(BHC-UNSHHT×AH)	BHC1	=	BHC2/(0.365FG)

TC1 = HC1+CC1+PØCST1+PMC1+SITE1+WAIT1+ES1+EA1+VPC1
+EEC1+BHC1+ØC1+AMSC1+CIBC1+DEA1

TC2 = (TC1)(0.365FG)

RETUB2 = (SMAPPP)(EA)+(SMAPPH)(BHC-UNSHHT×AH)

RETUB1 = RETUB2/0.365FG.

8. DINTPL

Refer to Report Number ORNL-TM-1542.

9. BØPR

Refer to Report Number ORNL-TM-1542.

10. SMAP

Refer to Report Number ORNL-TM-1542.

11. SUBAJ

Refer to Report Number ORNL-TM-1542.

Nomenclature

1. Multi-Effect Multi-Stage Flash

CBE	-	blowdown salt concentration, weight fraction
CØ	-	ocean salt concentration, weight fraction
CP	-	product salt concentration, weight fraction
CR	-	ratio of blowdown to ocean salt concentration
G	-	total plant production rate, gpd
PS	-	recovery ratio, lb-product/lb of effect recovery tube flow
QS	-	ratio of the reject to the recovery tube flow
RPE	-	total plant performance ratio, lb-product/1000 Btu
RS	-	performance ratio of a given effect, lb-product/1000 Btu
WBE	-	plant blowdown flow, lb/hr
WØS	-	coolant flow rate, lb/hr
WPE	-	total plant production rate, lb/hr
WPIN	-	product flow into the first stage of an effect, lb/hr
WPS	-	production rate of an effect, lb/hr
WRS	-	recycle flow rate of an effect, lb/hr

Subscripts:

E - total number of effects

M - effect number.

2. TCVAL

ACPSN	-	average ratio of heat of vaporization to shell side specific heat in evaporator, °F
ACPSNK	-	average ratio of heat of vaporization to shell side specific heat in recovery, °F
ACPTNK	-	average ratio of heat of vaporization to tube side specific heat in recovery, °F
AMBN	-	average heat of vaporization in evaporator, °F

CB	-	blowdown salt concentration, weight fraction
CBS	-	blowdown salt concentration, weight fraction
CCF	-	salt concentration of flashing brine entering the first stage, weight fraction
CCN	-	salt concentration of the tube side flow in the reject, weight fraction
CØ	-	ocean salt concentration, weight fraction
CP	-	product salt concentration, weight fraction
CPBT	-	average tube side specific heat in heater, Btu/lb-°F
CPTK	-	average tube side specific heat in reject, Btu/lb-°F
CPTNK	-	average tube side specific heat in recovery, Btu/lb-°F
CR	-	ratio of blowdown to ocean salt concentration
FFHL	-	heat loss to ambient from evaporator, fraction
NK	-	number of stages in recovery
NNK	-	number of stages in reject
NTØTAL	-	total number of stages
P	-	recovery ratio for evaporator, lb-product/lb-recovery tube flow
PNK	-	recovery ratio for recovery section, lb-product/lb-recovery tube flow
Q	-	ratio of seawater intake to recovery tube flow
RHØK	-	temperature decrement per stage in the reject, °F
RHØNK	-	temperature decrement per stage in the recovery, °F
RP	-	performance ratio, lb-product/1000 Btu
SMAQ	-	total heat lost to ambient from the evaporator, Btu/lb
SSF1	-	heat lost to the ambient from the heater, fraction
SUMA	-	summation of the difference between stage temperature and the ambient temperature for all the stages, °F
TB	-	blowdown temperature, °F
TBS	-	blowdown temperature, °F
TCF	-	maximum tube side brine temperature, °F
THF	-	maximum brine temperature, °F
TK	-	shell side brine temperature leaving recovery, °F
TØ	-	coolant temperature, °F
TV1	-	product temperature entering the first stage, °F

3. GSC

Overall Parameters for the Effect

CB - blowdown salt concentration, weight fraction

CCF - salt concentration of flashing brine entering the first stage, weight fraction

CØ - ocean salt concentration, weight fraction

N - stage number

RHØK - temperature decrement per stage in the reject, °F

RHØNK - temperature decrement per stage in the recovery, °F

TCF - maximum tube side temperature, °F

THF - maximum shell side temperature, °F

WF - recovery tube flow, lb/hr

WPIN - product flow entering the first stage, lb/hr

Overall Parameters for the Plant

M - effect number

WBE - plant blowdown, lb/hr

WPE - plant production rate, lb/hr

Stage Parameters

C1 - salt concentration of shell side brine entering, weight fraction

CPT - average tube side specific heat, Btu/lb-°F

CPT1 - specific heat of recycle flow, Btu/lb-°F

CPT2 - specific heat of the make-up flow, Btu/lb-°F

CTT1 - salt concentration of the recycle flow, weight fraction

CTT2 - salt concentration of the make-up flow, weight fraction

RHØ - shell side temperature decrement, °F

SMT1 - minimum tube side flow temperature, °F

SMT2 - maximum tube side flow temperature, °F

TS1 - temperature of shell side brine entering, °F

TS2 - temperature of shell side brine leaving, °F

TV1 - temperature of product flow entering, °F

TV2 - temperature of product flow leaving, °F

WP1 - product flow entering, lb/hr

WP2 - product flow leaving, lb/hr

WS1 - shell side brine entering, lb/hr

WS2 - shell side brine leaving, lb/hr

WT - total tube side flow, lb/hr

WT1 - recycle tube flow, lb/hr

WT2 - make-up tube flow, lb/hr

4. STAGEG

A - weir cross-sectional area required with the pressure drop available, ft^2

AH - brine heater condenser surface area, ft^2

ALEV - number of plant tray levels

AMØDU - number of plant modules

AS - condenser surface area of a stage, ft^2

BARØM - average log-mean temperature difference of an effect, °F

BDEPH - brine depth in trays, ft

BIKTE - tube metal conductivity in the evaporator recovery, Btu/hr-ft^2-°F/ft

BIKTH - tube metal conductivity in brine heater, Btu/hr-ft^2-°F/ft

BIKTR - tube metal conductivity in evaporator reject, Btu/hr-ft^2-°F/ft

CFMWV - product flow of a stage, cfm

CFMWZ - product reflashed in a stage, cfm

CL - loss coefficient of interstage orifice

CØEFA - orifice coefficient of interstage orifice

CPBT - average brine specific heat in brine heater, Btu/lb-°F

DELP - pressure drop available into a stage, psi

DENBR - density of flashing brine leaving a stage, lb/ft^3

DI - inside tube diameter, in.

DIE - plant recovery condenser tube inside diameter, in.

DIH - heater condenser tube inside diameter, in.

DIR - plant reject condenser tube inside diameter, in.

DØ - tube outside diameter, in.

DØE - plant recovery tube outside diameter, in.

DØH - heater tube outside diameter, in.

DØR - plant reject tube outside diameter, in.

DPREQ - pressure drop required between two stages, psi

GE - mass velocity in recovery, $lb/hr\text{-}ft^2$

GF - tube side mass velocity, $lb/hr\text{-}ft^2$

GH - mass velocity in heater, $lb/hr\text{-}ft^2$

HCF - brine enthalpy entering heater, Btu/lb

HHF - enthalpy of brine leaving the heater, Btu/lb

HLH - brine heater length, ft

HNH - number of condenser tubes in the heater

HP1 - enthalpy of product entering a stage, Btu/lb

HP2 - enthalpy of product leaving a stage, Btu/lb

HV - enthalpy of saturated vapor at the condensing temperature of a stage, Btu/lb

M - effect number

NK - number of stages in the recovery sections

NNK - number of stages in the reject section

NTØTAL - total number of stages

ØM - log-mean temperature difference in each stage, °F

ØRHT - weir height required in each stage, ft

PV - pressure in a stage, psia

QH - heat transferred across the tube bundle in a stage, Btu/hr

RESIDT - residence time of tray flow in a stage, seconds

RHØ - flashing brine temperature drop for a stage, °F

RHØB - density of flashing brine entering each stage, lb/ft^3

RHØE1 - tube side brine density at hot end of evaporator recovery, lb/ft^3

RHØH1 - brine density at hot end of heater, lb/ft^3

RHØRES - density of flashing brine entering each stage, lb/ft^3

RHØR1 - tube side brine density at hot end of reject, lb/ft^3

RSE - fouling factor in recovery, $Btu^{-1}\text{-}hr\text{-}ft^2\text{-}°F$

RSH - fouling factor in heater, $Btu^{-1}\text{-}hr\text{-}ft^2\text{-}°F$

RSR - fouling factor in reject, Btu^{-1}-hr-ft^2-°F

SE - flooding factor in recovery

SH - flooding factor in heater

SLS - tube length exposed in a stage, ft

SMT1 - tube side brine temperature entering a stage, °F

SMT2 - tube side brine temperature leaving a stage, °F

SPL - splash plate length, in.

SR - flooding factor in reject

SSF1 - heat loss to ambient in heater, fraction

TCF - brine temperature entering the heater, °F

THF - maximum brine temperature, °F

THM - brine heater log-mean temperature difference, °F

TRAYFL - maximum tray flow allowed in a stage, lb/hr-ft

TRAYLH - tray length of a stage, ft

TRAYWD - minimum allowable tray width for a stage, ft

TS - steam temperature, °F

TSTH - intermediate tube sheet thickness, in.

TS1 - flashing brine temperature entering each stage, °F

TS2 - flashing brine temperature leaving each stage, °F

TV2 - condensing temperature in each stage, °F

UBAR - overall heat transfer coefficient for each stage, Btu/hr-ft^2-°F

UBARH - overall heat transfer coefficient in heater, Btu/hr-ft^2-°F

VE - recovery tube velocity, ft/sec

VH - heater tube velocity, ft/sec

VR - reject tube velocity, ft/sec

VVEL - vapor velocity leaving the tray of each stage, ft/sec

WBS - brine flow entering a tray in each stage, lb/hr

WF - tube flow in evaporator recovery, lb/hr

WØ - tube flow in evaporator reject, lb/hr

WP1 - product entering each stage, lb/hr

WT - tube flow in each stage, lb/hr

WTME - tray width in reject, ft

WV - product made in each stage, lb/hr

5. Demisters

ADMMAX - maximum area available for installing demister, ft^2

ALEV - number of plant levels

ALPDM - α in term $e^{-\alpha L}$ for calculating demister efficiency

AMØDU - number of plant modules

ANREDM - Reynolds number based on superficial velocity through demister

AREADM - area of demister, ft^2

BIGTE - stage temperature minus BPR, °F

BPR - boiling point elevation in a stage, °F

C(I) - salt concentration of the flashing brine entering a stage, weight fraction

CAVE - average brine concentration, weight fraction

CNCSAV - average brine salt concentration, weight fraction

CØSTDM - total cost of demisters, $

CØUTDM - concentration of entrained brine passing through demister, weight fraction

CPRØD - weight fraction of salt in product water at point i, weight fraction

DPDDM - pressure drop through demister based on dry vapor, psi

DPTDM - total pressure drop through demister, psi

DPWDM - additional pressure drop through demister for wet vapor, psi

DTDM - pressure drop through demister expressed as equivalent temperature drop, °F

DTPDP - input value for DTPD, °F

DTPDPS - location for saving DTPDP

EFFDM - efficiency of demister

EINDM - amount of entrainment in vapor reaching demister, ppm

EØUTDM - amount of entrainment in vapor leaving demister, ppm

FFDM - friction factor for demister

GDM - superficial mass velocity through demister, $lb/hr\text{-}ft^2$

NTØTAL - number of stages in the effect

PØUTDM - pressure at exit face of demister, psia

PS	-	pressure at inlet face of demister, psia
SLS	-	length of the stage, ft
SMPRD(I)	-	total product flow at point i, lb/hr
SMSALT	-	total salt flow at point i, lb/hr
SMSALT(I)	-	total salt flow at point i, lb/hr
SUMDMA	-	total demister area, ft^2
TØUTDM	-	saturation temperature at exit face of demister, °F
TRAYWD	-	tray width, ft
TS(I)	-	temperature of the tube side brine entering the stage, °F
TSAVE	-	average brine temperature, °R
TSAVG	-	average brine temperature, °F
UALP	-	maximum value of U to be used in calculating α
UDMIN	-	same as UYØRK
UG	-	viscosity of vapor, lb/sec-ft
UMAX	-	maximum superficial velocity desired through demister, ft/sec
UPL	-	brine viscosity, centipoise
UYØRK	-	superficial velocity through demister, ft/sec
VG	-	specific volume of vapor, ft^3/lb
VIS	-	viscosity of brine, lb/hr-ft
VL	-	specific volume of liquid, ft^3/lb
WIDDM	-	width of demister, ft
WPRØDM	-	product rate for stage (I), lb/hr
WPRØDM(I)	-	product rate for stage (I), lb/hr
WPRSAV	-	location to save WPRØDM(I)
WSALSV	-	location to save WSALT(I)
WSALT(I)	-	salt rate for stage (I), lb/hr
WV	-	stage production rate, lb/hr
WVST	-	vapor flow rate per tray, lb/hr
XDM	-	parameter for calculating entrainment leaving brine surface
XDPL	-	parameter for calculating pressure drop through demister

XLDM - thickness of demister, ft

XLIQDM - second parameter for calculating pressure drop through demister

XYØRL - parameter for calculating allowable velocity through demister

YYØRK - parameter for calculating allowable velocity through demister.

6. PØWERU

AE - recovery condenser area of an effect, ft^2

ALEV - number of plant levels

AMBDAS - heat of vaporization of the steam, Btu/lb

AMØDU - number of modules

APTSE - recovery tube sheet area of an effect, ft^2

APTSR - reject tube sheet area of an effect, ft^2

AR - reject condenser area of an effect, ft^2

AS - stage condenser area, ft^2

CDETS - charge for drilling the end tube sheets, $/hole

CDITS - charge for drilling the intermediate tube sheets, $/hole

CETSE - cost of plant recovery end tube sheets, $

CETSR - cost of plant reject end tube sheets, $

CITSE - plant recovery intermediate tube sheet cost, $

CITSR - plant reject intermediate tube sheet cost, $

CTUBEE - recovery tubing cost for an effect, $

CTUBER - reject tubing cost for an effect, $

DØ - tube outside diameter, in.

DØE - plant recovery tubes outside diameter, in.

DØR - plant reject tubes outside diameter, in.

E - number of effects

ELE - recovery length of an effect, ft

ENE - number of tubes in the recovery of an effect

ENITSE - number of intermediate tube sheets in the recovery of an effect

ENITSR	-	number of intermediate tube sheets in the reject of an effect
HST	-	height of a level, ft
I	-	stage number
M	-	effect number
NK	-	number of stages in the recovery of an effect
NNK	-	number of stages in the reject of an effect
NTØTAL	-	total number of stages in an effect
RLR	-	length of the reject of an effect, ft
RNR	-	number of tubes in the reject of an effect
SLS	-	stage length, ft
SMA1	-	plant recovery tube cost, $\$/ft^2$
SMA2	-	plant reject tube cost, $\$/ft^2$
TSTEM	-	steam temperature, °F
TSTH	-	intermediate tube sheet thickness, in.
UBAR	-	heat transfer coefficient of a stage, $Btu/hr\text{-}ft^2\text{-}°F$
UBARA	-	average heat transfer coefficient for an effect, $Btu/hr\text{-}ft^2\text{-}°F$
UBARE	-	average heat transfer coefficient for the recovery of an effect, $Btu/hr\text{-}ft^2\text{-}°F$
UBARR	-	average heat transfer coefficient for the reject of an effect, $Btu/hr\text{-}ft^2\text{-}°F$
Z	-	stage length, ft.

7. CØSTS

Heads and Power

DIE	-	plant recovery tube inside diameter, in.
DIH	-	heater tube inside diameter, in.
DIR	-	plant reject tube inside diameter, in.
ELES	-	recovery length of an effect, ft
HBL	-	blowdown pumping head, ft
HD	-	pumping head to the plant site, ft
HDEL	-	delivery pump head, ft
HE	-	height of the recovery, ft

HH - head loss in headers between the heater and the evaporator, ft

HLH - length of the heater, ft

HMKUP - make-up pump head. ft

HPR - product pump head, ft

HR - height of the reject

HREC - pumping head for the recycle pump of an effect, ft

HS1S - pressure difference between the first and last stages of an effect, ft

M - effect number

PØ - total power requirement for the plant, megawatts

PØ3 - deaerator power requirement, megawatts

PØBLD - blowdown pump power requirement, megawatts

PØDEL - delivery pump power requirement, megawatts

PØMKUP - make-up pump power requirement, megawatts

PØPRD - product pump power requirement, megawatts

PØREC - recycle pump power requirement, megawatts

RLRS - reject length of an effect, ft

SMALLE - pump efficiency, fraction

SMALLF - friction factor

TBE - plant blowdown temperature, °F

VE - plant recovery tube side velocity, ft/sec

VH - heater tube side velocity, ft/sec

VR - plant reject tube side velocity, ft/sec

WBE - plant blowdown flow, lb/hr

WFS - recovery tube side flow of an effect, lb/hr

WØS - reject tube side flow of an effect, lb/hr

WPE - plant production rate, lb/hr

WRS - recycle flow of an effect, lb/hr

Costs Equations

A3 - unit cost of heater tubing and tube sheets, $\$/ft^2$

A4 - unit cost of heater shell, $\$/ft^2$

ACID - annual cost for acid treatment, $/year

AES - recovery condenser area in an effect, ft^2

AH	-	brine heater condenser area, ft^2
AJ	-	indirect capital cost factor
ALEV	-	number of plant levels
AMØDU	-	number of plant modules
AMSC1	-	cost of maintenance and supplies, $/Kgal
AMSC2	-	annual cost of maintenance and supplies, $/year
ANS	-	number of stages in an effect
ARS	-	reject condenser area in an effect, ft^2
BHC	-	brine heater cost, $
BHC1	-	brine heater cost, $/Kgal
BHC2	-	brine heater annual cost, $/year
CAPF	-	plant load factor
CAPI1	-	total capital investment, $
CAPI2	-	total capital investment, $/gpd
CAPI3	-	total capital investment, $/Kgal
CAUSTC	-	annual cost for caustic treatment, $/year
CC1	-	total chemical treatment cost, $/Kgal
CC2	-	annual chemical treatment cost, $/year
CD	-	direct capital investment, $10^6$$
CDETS	-	charge for drilling end tube sheets, $/hole
CDITS	-	charge for drilling intermediate tube sheets, $/hole
CETSE	-	cost of recovery end tube sheets for an effect, $
CETSR	-	cost of reject end tube sheets for an effect, $
CIBC	-	cost of miscellaneous buildings and equipment, $
CIBC1	-	cost of miscellaneous buildings and equipment, $/Kgal
CIBC2	-	annual cost of miscellaneous buildings and equipment, $/year
CITSE	-	recovery intermediate tube sheet cost for an effect, $
CITSR	-	reject intermediate tube sheet cost for an effect, $
CLØRIN	-	chlorine treatment cost, $
CØ	-	ocean salt concentration, weight fraction
CR	-	ratio of blowdown to ocean salt concentration
DEACST	-	cost of deaerator and drive, $
DEACS1	-	cost of deaerator, $

DEACS2	-	cost of deaerator drive, $
DEA1	-	cost of deaerator and drive, $/Kgal
DEA2	-	annual cost of deaerator and drive, $/year
DEFØM	-	annual cost of defoaming treatment, $/year
DØE	-	plant recovery tubes outside diameter, in.
DØR	-	plant reject tubes outside diameter, in.
E	-	number of effects
EA	-	direct capital cost of evaporator condenser tubing and tube sheets, $
EA1	-	cost of evaporator condenser tubing and tube sheets, $/Kgal
EA2	-	annual cost of evaporator condenser tubing and tube sheets, $/year
EEC	-	electrical equipment direct capital cost, $
EEC1	-	electrical equipment cost, $/Kgal
EEC2	-	annual electrical equipment cost, $/year
ES	-	direct capital cost of evaporator shell, $
ES1	-	cost of evaporator shell, $/Kgal
ES2	-	annual cost of evaporator shell, $/year
G	-	product rate, gpd
HC1	-	heat cost, $/Kgal
HC2	-	annual heat cost, $/year
LFACID	-	acid plant load factor
ØP1	-	operating cost, $/Kgal
ØP2	-	annual operating cost, $/year
PMC	-	direct capital cost of pumps and motors, $
PMC1	-	pump and motor cost, $/Kgal
PMC2	-	annual pump and motor cost, $/year
PMCFLØ	-	cost of pumps, $
PMCPØ	-	cost of motors, $
PØ3	-	power required by the deaerator, megawatts
PØCST1	-	power cost, $/Kgal
PØCST2	-	annual power cost, $/year
RETUB1	-	retubing cost, $/Kgal

RETUB2	-	retubing cost, $/year
RPE	-	plant performance ratio
SITE	-	direct capital cost for site and site work, $
SITE1	-	cost of site and site work, $/Kgal
SITE2	-	annual cost of site and site work, $/year
SMALLB	-	unit cost of heat, $/$10^6$ Btu
SMALLD	-	unit cost of power, $/kw-hr
SMALLP	-	annual capital charge factor, yr^{-1}
SMAPPH	-	annual capital charge for retubing heater, yr^{-1}
SMAPPP	-	annual capital charge for retubing evaporator, yr^{-1}
TBE	-	blowdown temperature, °F
TC1	-	total product cost, $/Kgal
TC2	-	total annual cost, $/year
TNACDY	-	tons of 93% H_2SO_4 required per day for acid plant
UNCHEM	-	unit chemical treatment cost, $/gpm
UDEAWM	-	unit cost of deaerator, $/gpm
UDEAHP	-	unit cost of deaerator drive, $/hp
UNPUMP	-	unit cost of all the pumps, $/gpm
UNDRVE	-	unit cost of pump motors, $/hp
UNELCT	-	unit cost of electrical equipment, $/kw
UNPIPE	-	unit cost of valves and piping, $/gpm
UINTAK	-	unit cost of water intake system, $/gpm
UNSITE	-	unit cost of site and site work, $/gpm
UNARAE	-	unit cost of recovery tubes and tube sheets, $/$ft^2$
UNARAR	-	unit cost of reject tubes and tube sheets, $/$ft^2$
UNARHT	-	unit cost of heater tubes and tube sheets, $/$ft^2$
UNSHHT	-	unit cost of heater shell, $/$ft^2$
USHELV	-	unit cost of evaporator shell, $/$ft^3$
USHELN	-	unit cost of adding a stage, $/stage
UNMSCL	-	unit cost of miscellaneous buildings and equipment, $/gpm
UNØPR	-	unit cost of operating expenses, $/gpm
UNMAIN	-	unit cost of maintenance and supplies, $/$ of capital
VØLUME	-	total shell volume (all modules) of the plant, ft^3

VPC	-	direct capital cost of valves and piping, $
VPC1	-	cost of valves and piping, $/Kgal
VPC2	-	annual cost of valves and piping, $/year
WAIT	-	direct capital cost of water intake system, $
WAIT1	-	cost of water intake system, $/Kgal
WAIT2	-	annual cost of water intake system, $/year
WBE	-	blowdown flow, lb/hr
WBLØW	-	blowdown flow, gpm
WFS	-	recovery tube flow, lb/hr
WMAKUP	-	make-up flow, gpm
WØS	-	seawater flow, lb/hr
WPE	-	product rate, lb/hr
WPRØD	-	production rate, gpm
WPUMP	-	total throughput of all pumps, gpm
WRECØV	-	recovery tube flow, gpm
WREJCT	-	seawater flow, gpm

USAGE

Input

1. Description of Cards

The data items are listed in the table below in the order that they must appear on each card.

TABLE I

Card									
1	G	CR	TS	TA	CØ	CP	VR	VE	VH
2	HD	HR	HE	HH	HBL	HPR	FFHL	SSF1	DØR
3	DIR	DØE	DIE	DØH	DIH	RSR	RE	RH	SR
4	SE	SH	BIKTR	BIKTE	BIKTH	CAPF	ACACID	FACID	
5	SMALLE	SMALLD	SMALLB	SMALLP	SMA1	SMA2	A3	A4	
6	RATEIN	WPL	CSLTBP	CSLTBH	CØEFA	DTPD	CL		
7	AMØDU	ALEV	TSTH	FREBD	TWFA	SPL	BDEPH	HST	
8	CASE	RPE	E	TBE	TØE	CDITS	CDETS	UMAX	UALP
9	THS(1)	RS(1)	ANS(1)	THS(2)	RS(2)	ANS(2)	THS(3)	RS(3)	ANS(3)
N	THS(M)	RS(M)	ANS(M)	TØTALR					

The number of data cards (N) required depends on the number of effects in the plant. For instance, a two-effect plant requires only nine data cards. A three-effect plant requires ten cards since another card is needed to enter TØTALR.

The items in the table above are defined as follows:

Card 1:

G	-	plant production rate, gpd
CR	-	ratio of blowdown to ocean salt concentration
TS	-	steam temperature, °F
TA	-	ambient temperature, °F
CØ	-	ocean salt concentration, weight fraction
CP	-	product salt concentration, weight fraction
VR	-	plant reject tube side velocity, ft/sec
VE	-	plant recovery tube side velocity, ft/sec
VH	-	brine heater tube side velocity, ft/sec

Card 2:

HD	-	pumping head to the plant site, ft
HR	-	height of the plant reject, ft
HE	-	height of the plant recovery, ft
HH	-	header losses between the evaporator and the heater, ft
HBL	-	blowdown pump head, ft
HPR	-	product pump head, ft
FFHL	-	heat loss to the ambient from the evaporator, fraction
SSF1	-	heat loss to the ambient from the heater, fraction
DØR	-	reject tube outside diameter, in.

Card 3:

DIR	-	reject tube inside diameter, in.
DØE	-	recovery tube outside diameter, in.
DIE	-	recovery tube inside diameter, in
DØH	-	heater tube outside diameter, in.

DIH - heater tube inside diameter, in

RSR - reject fouling factor, Btu^{-1}-hr-ft^2-°F

RE - recovery fouling factor, Btu^{-1}-hr-ft^2-°F

RH - heater fouling factor, Btu^{-1}-hr-ft^2-°F

SR - reject flooding factor.

Card 4:

SE - recovery flooding factor

SH - heater flooding factor

BIKTR - reject tube metal thermal conductivity, Btu/hr-ft-°F

BIKTE - recovery tube metal thermal conductivity, Btu/hr-ft-°F

BIKTH - heater tube metal thermal conductivity, Btu/hr-ft-°F

CAPF - plant load factor

ACACID - acid plant annual capital charge rate, yr^{-1}

FACID - acid plant load factor.

Card 5:

SMALLE - pump efficiency

SMALLD - power cost, $/kw-hr

SMALLB - heat cost, $/$10^6$ Btu

SMALLP - annual charge rate for the water plant, yr^{-1}

SMA1 - recovery condenser area cost, $/$ft^2$

SMA2 - reject condenser area cost, $/$ft^2$

A3 - heater area and tube sheet cost, $/$ft^2$

A4 - heater shell cost, $/$ft^2$

Card 6:

RATEIN - interest rate, fraction

WPL - plant life, years

CSLTBP - evaporator tube life, years

CSLTBH - heater tube life, years

CØEFA - orifice coefficient

DTPD - temperature loss due to pressure drop through the tube bundle, °F

CL - orifice velocity head loss.

Card 7:

AMØDU	-	number of modules
ALEV	-	number of plant levels
TSTH	-	intermediate tube sheet thickness, in.
FREBD	-	vertical distance available for vapor escape from the trays, ft
TWFA	-	tray width factor
SPL	-	splash plate length, ft
BDEPH	-	brine depth, ft
HST	-	height of each level, ft

Card 8:

CASE	-	case number
RPE	-	total plant performance ratio, lb-product/10^3 Btu
E	-	number of effects
TBE	-	blowdown temperature, °F
TØE	-	ocean temperature, °F
CDITS	-	cost of drilling intermediate tube sheets, $/hole
CDETS	-	cost of drilling the end tube sheets, $/hole
UMAX	-	maximum superficial velocity desired through the demister, ft/sec
UALP	-	maximum velocity to be used in the calculation of α for the demister, ft/sec

Card 9:

THS(I)	-	maximum brine temperature in effect I, °F
RS(I)	-	performance ratio of effect I, lb-product/10^3 Btu
ANS(I)	-	number of stages in effect I
TØTALR	-	number of stages in the plant reject

2. Format

All data items except CASE are assigned a field of F8.5. CASE is assigned a field of F8.0. The data items are arranged on the data cards as shown in Table I in the fields specified.

3. Choice of Variable

TØTALR is treated as an independent variable if it is entered. Otherwise, it is treated as a dependent variable. All other input variables are treated as independent variables and must be entered unless the value of the variable is meant to be zero.

Output

The output contains all the input variables in addition to the calculated plant characteristics of interest. The computed information includes an overall description of each effect, plant power requirements, costs and a detailed description of each stage in the plant. The descriptive information includes temperatures, flow rates, geometry and heat transfer characteristics.

Operating Instructions

The program consists of a main program and several subroutines. The program is loaded on the machine by stacking the subroutines and main program, in any order, followed by an end-of-file card and the data cards. There are no programmed stops or pauses. The computation stops when an end-of-file condition is detected on the input tape. The program takes its input from logical tape 10, and writes its output on logical tape 9. Card-to-tape translation of input onto tape 10 is done off-line. Tape 9 is listed off-line under program control.

In summary

Read input cards on tape (off-line)
Mount the following tapes:
  Input 10
  Output 9
Clear keys
Load program
After final stop, write (off-line) from tape 9.

Example

The following example is calculation for a plant with an overall performance ratio of 15, salt concentration ratio of 2, and a 91.75° blowdown temperature. The input and output for the example case are given in Figures 2 and 3.

CODING INFORMATION

Time Requirements

The calculation requires approximately two minutes of machine time for each case. This time, of course, will vary with the number of stages and/or effects in the plant.

Flow Charts and Source Program

Figures 4, 5, 6, and 7 give the flow charts for the overall Multi-Effect Multi-Stage Flash Program and subroutines GSC, TCVAL, and STAGEG, respectively. The source program is given in Figure 8.

80 COLUMN ENTRY

PROGRAMMER I. R. PARSLEY PROBLEM EXAMPLE CASE DATE PAGE 1 OF 1

1–5	6–10	11–15	16–20	21–25	26–30	31–35	36–40	41–45	46–50	51–55	56–60	61–65	66–70	71	73–80
250	.E62.		295.			.03	36	.0000	1 6.		6.	6			
	79	.8		2	5.			92.				.75			
.68	.75		.68	1	.	.93		.0005	.0003		.0003	1			
1.	1.		26.	2	6.	26.		.9	.1		.9				
.836	.0033		.114	.	056	2.02		2.02	3.38		1.47				
.0313	30	.	15.	1	5..	1.		.5	3.						
5.	8.		.75	1	.6	.9		12.	1.		5.6				
61	901.15	.	3.	9	2.	65.		.0282	.094		40.	30.			
290.	4.	203	20.	2	50.	6.7	26	30.	16	0.	4.07	1 1	6.		
2.															

FIGURE 2. DATA INPUT TO CODE

CASE	61901.	RP	15.00000	CR	2.00000	P	0.	Q	0.	TB	0.
N	0.	ROE	0.								
0.	0.				0.10265840E 08		0.22282665E 07		0.38612495E 07		0.66000000E 02

PLANT PRODUCT RATE GPD	0.24999999E 09	PLANT PRODUCT RATE LB/HR	0.86107999E 08	BRINE DEPTH FT	0.09999999E 01
PLANT PERFORMANCE RATIO	0.15000000E 02	PLANT BLOWDOWN FLOW LB/HR	0.86082370E 08	LEVEL HEIGHT FT	0.55999999E 01
TOTAL NO STAGES	66.	STEAM FLOW LB/HR	0.62735732E 07	TRAY WIDTH FACTOR	0.
OCEAN SALT CONC	0.03360	NO OF MODULES	5.00	STAGE ORIFICE COEF	1.000
PRODUCT SALT CONC	0.00001	NO OF TRAY LEVELS	8.0	MODULE SHELL VOL	0.73469119E 06
SALT CONC RATIO	2.000	TUBE SHEET THICKNESS IN	0.750	REACTOR THERMAL EFF	0.
STEAM TEMPERATURE	295.00	VAPOR ESCAPE HEIGHT FT	1.600	REACTOR SIZE M-W	0.16803248E 04
OCEAN TEMP	65.000			TOTAL MEGA WATTS ELEC	0.100956E 03
BLOWDOWN TEMP	92.00	SPLASH PLATE LENGTH IN	12.0000		

BRINE HEATER

FLOODING FACTOR	1.00000	TUBE OUTSIDE DIA	0.10000E 01	CONDENSER AREA	0.64227930E 06
FOULING FACTOR	0.00030	TUBE INSIDE DIA	0.93000	HEATER LENGTH	0.25536890E 02
TUBE METAL CONDUCTIVITY	26.000	TUBE FLOW LB/HR	0.58000708E 09	NO CONDENSER TUBES	0.960700E 05
TUBE VELOCITY	6.000	HEAT TRANSFER COEF	0.98101944E 03		

EFFECT NO 1

	EVAPORATOR RECOVERY	EVAPORATOR REJECT		
FLOODING FACTOR	1.00	1.00	PERFORMANCE RATIO	4.20300
FOULING FACTOR	0.000300	0.000300	RECOVERY RATIO P	0.041558
TUBE VELOCITY	6.000	6.000	RATIO OF WO TO WF	0.810197
TUBE METAL CONDUCTIVITY	26.00	26.00	MAX BRINE TEMP SHELL SIDE	0.29000000E 03
TUBE OUTSIDE DIAMETER	0.75000	0.75000	MAX BRINE TEMP TUBE SIDE	0.27999198E 03
TUBE INSIDE DIAMETER	0.680000	0.680000	BLOWDOWN TEMP F	0.24999908E 03
TEMP DROP PER STAGE	1.98962	2.03133	COOLANT TEMP F	237.476917
TUBE FLOW LB/HR	0.58000708E 09	0.46990163E 09	BLOWDOWN FLOW LB/HR	0.14811908E 09
NO OF STAGES	15	5	PRODUCT RATE LB/HR	0.24103989E 08
HEAT TRANSFER COEF	0.88443102E 03	0.97933502E 03	RECYCLE FLOW LB/HR	0.40783010E 09
CONDENSER AREA	0.26880661E 07	0.71422679E 06	RETURN FLOW LB/HR	0.29769670E 09
TUBE LENGTH	0.76578771E 02	0.25778849E 02		
NO OF TUBES	0.17877304E 06	0.14110522E 06	AVERAGE THERMAL FORCE	0.75896358E 01
			AVERAGE HEAT TRANSFER COEF	0.90438126E 03

EFFECT NO 2

	EVAPORATOR RECOVERY	EVAPORATOR REJECT		
FLOODING FACTOR	1.00	1.00	PERFORMANCE RATIO	6.72600
FOULING FACTOR	0.000300	0.000300	RECOVERY RATIO P	0.082118
TUBE VELOCITY	6.000	6.000	RATIO OF WO TO WF	0.931338
TUBE METAL CONDUCTIVITY	26.00	26.00	MAX BRINE TEMP SHELL SIDE	0.25000000E 03
TUBE OUTSIDE DIAMETER	0.75000	0.75000	MAX BRINE TEMP TUBE SIDE	0.23747692E 03
TUBE INSIDE DIAMETER	0.680000	0.680000	BLOWDOWN TEMP F	0.15999226E 03
TEMP DROP PER STAGE	2.97427	3.16920	COOLANT TEMP F	146.281515
TUBE FLOW LB/HR	0.46990590E 09	0.43759594E 09	BLOWDOWN FLOW LB/HR	0.10951689E 09
NO OF STAGES	26	4	PRODUCT RATE LB/HR	0.38587796E 08
HEAT TRANSFER COEF	0.91179382E 03	0.83984940E 03	RECYCLE FLOW LB/HR	0.29771127E 09
CONDENSER AREA	0.43672886E 07	0.73830715E 06	RETURN FLOW LB/HR	0.26543261E 09
TUBE LENGTH	0.15763480E 03	0.29748722E 02		
NO OF TUBES	0.14110105E 06	0.12639771E 06	AVERAGE THERMAL FORCE	0.91300636E 01
			AVERAGE HEAT TRANSFER COEF	0.90135770E 03

FIGURE 3. OUTPUT FOR EXAMPLE PROBLEM

EFFECT NO 3

	EVAPORATOR RECOVERY	EVAPORATOR REJECT		
FLOODING FACTOR	1.00	1.00	PERFORMANCE RATIO	4.07100
FOULING FACTOR	0.000300	0.000500	RECOVERY RATIO P	0.053508
TUBE VELOCITY	6.000	6.000	RATIO OF WO TO WF	0.504478
TUBE METAL CONDUCTIVITY	26.00	26.00	MAX BRINE TEMP SHELL SIDE	0.16000000E 03
TUBE OUTSIDE DIAMETER	0.75000	0.75000	MAX BRINE TEMP TUBE SIDE	0.14628151E 03
TUBE INSIDE DIAMETER	0.680000	0.680000	BLOWDOWN TEMP F	0.91999999E 02
TEMP DROP PER STAGE	3.87007	6.90948	COOLANT TEMP F	65.000000
TUBE FLOW LB/HR	0.43762139E 09	0.22076861E 09	BLOWDOWN FLOW LB/HR	0.86082366E 08
NO OF STAGES	14	2	PRODUCT RATE LB/HR	0.23416210E 08
HEAT TRANSFER COEF	0.76248036E 03	0.59316255E 03	RECYCLE FLOW LB/HR	0.26540558E 09
CONDENSER AREA	0.32104854E 07	0.77573257E 06	RETURN FLOW LB/HR	0.48580008E 08
TUBE LENGTH	0.12936646E 03	0.61892389E 02		
NO OF TUBES	0.12639196E 06	0.63833001E 05	AVERAGE THERMAL FORCE	0.10075006E 02
			AVERAGE HEAT TRANSFER COEF	0.72938987E 03

HEADS AND POWER

PUMP EFFICIENCY	0.83600000E 00				
DELIVERY HEAD	-0.	REJECT HEAD	0.79799999E 02	HEATER HEAD	0.25000000E 02
BLOWDOWN HEAD	-0.	PRODUCT HEAD	0.91999999E 02		
EVAPORATOR HEAD	0.44799999E 02				

	HEAD(FT)	POWER MEGA-WATTS
DELIVERY PUMP	0.92713560E 02	0.92246083E 01
MAKE-UP PUMP	0.21898916E 03	0.16994125E 02
RECYCLE PUMP EFFECT 1	0.14752209E 03	0.27113742E 02
2	0.13551564E 03	0.18182435E 02
3	0.85787659E 02	0.10261296E 02
BLOWDOWN PUMP	-0.	-0.
PRODUCT PUMP	0.91999999E 02	0.35702504E 01
DEAERATOR		0.38473424E 01
TOTAL PLANT REQUIREMENT		0.89193798E 02

0UNIT COSTS

DEAERATOR $/GPM	0.36321107E 01	PUMPS AND MOTORS $/GPM	0.10084815E 01	ELECTRICAL EQUIP $/KW	0.10300E 02
$/HP	0.12047900E 02	$/HP	0.20836895E 02		
VALVES AND PIPING $/GPM	0.50872175E 01	WATER INTAKE $/GPM	0.50000000E 00	SITE WORK $/GPM	0.54315212E 01
EVAPORATOR AREA $/FT2	0.20199999E 01	REJECT AREA $/FT2	0.20199999E 01	HEATER AREA $/FT2	0.338000E 01
HEATER SHELL $/FT2	0.14699999E 01	EVAP AND REJECT SHELL $/FT3	0.132600E 01	MISC CAPITAL $/GPM	0.143541E 02
		$/STAGE	0.58503781E 05		
CHEMICAL $/GPM-YR	0.37139829E 01	OPERATING $/GPM	0.31651263E 01	MAINT. AND SUPPLIES $/YR-$-CAP	0.1700E-02
POWER $1KW-HR	0.00330000	HEAT $/MBTU	0.11399999E-00	ANNUAL CAP CHG 1/YR	0.0560
EVAP AND REJECT RETUBING	0.32675879E-01	HEATER RETUBING CHG	0.32675879E-01	INTEREST RATE	0.03130
INDIRECT CHARGE	0.12086751E 01	WATER PLANT LOAD FACTOR	0.90	ACID PLANT LOAD FACTOR	0.900
ACID PLANT CAP CHG 1/YR	0.10				

COSTS

	$-DIRECT	$/YEAR	$/KGAL
PUMPS AND MOTORS	0.59729419E 07	0.40428337E 06	0.49227808E-02
SITE WORK	0.24981445E 07	0.16908891E 06	0.20589215E-02
SEA INTAKE	0.22996730E 06	0.15565521E 05	0.18953451E-03
EVAPORATOR SHELL	0.98455929E 07	0.66640686E 06	0.81145433E-02
EVAPORATOR AREA	0.25238094E 08	0.25329377E 07	0.30842469E-01
BRINE HEATER	0.31150546E 07	0.28178117E 06	0.34311254E-02
VALVES AND PIPING	0.12027824E 07	0.81411295E 05	0.99130955E-03
ELEC EQUIPMENT	0.91869610E 06	0.62182683E 05	0.75717120E-03

FIGURE 3 (Continued)

CRANES,BLDG,CONCRETE,ETC	0.25749999E 07	0.17429094E 06	0.21222641E-02
DEAERATOR	0.13650814E 07	0.92396631E 05	0.11250731E-02
HEAT		0.51594532E 07	0.62824395E-01
CHEMICAL		0.13323168E 07	0.16223036E-01
POWER		0.23205727E 07	0.28256594E-01
OPERATING		0.56779727E 06	0.69138177E-02
MAINTENANCE AND SUPPLIES		0.10882221E 06	0.13250802E-02
TOTAL		0.13969307E 08	0.17009810E-00

	$-DIRECT AND INDIRECT	$/GPD	$/YEAR	$/KGAL
CAPITAL INVESTMENT	0.64013068E 08	0.25605227E-00		0.43649703E-01
REACTOR COST	0.72475583E 08			
TURBO GENERATOR COST	0.72763938E 07			
RETUBING COST			0.40638155E 06	0.49483295E-02

FIGURE 3 (Continued)

EFFECT 3

STAGE	TTD	CT	C1	C2	QN	UBAR	HI	HO	OM	AS	LS	TUBE NO
1	7.5637	0.05399	0.06301	0.06324	0.16912146E 10	822.03	1833.63	5070.14	9.40	0.218797E 06	8.816	0.126392E 06
2	7.6489	0.05399	0.06324	0.06348	0.16572343E 10	813.50	1801.69	5017.09	9.45	0.215464E 06	8.682	0.126392E 06
3	7.6546	0.05399	0.06348	0.06371	0.16572078E 10	805.08	1769.89	4970.90	9.46	0.217581E 06	8.767	0.126392E 06
4	7.6602	0.05399	0.06371	0.06395	0.16571630E 10	796.51	1737.95	4923.96	9.47	0.219785E 06	8.856	0.126392E 06
5	7.6862	0.05399	0.06395	0.06419	0.16556773E 10	787.72	1705.93	4873.47	9.49	0.221460E 06	8.924	0.126392E 06
6	7.7077	0.05399	0.06419	0.06442	0.16556480E 10	778.78	1673.81	4822.79	9.51	0.223484E 06	9.005	0.126392E 06
7	7.7288	0.05399	0.06442	0.06466	0.16555863E 10	769.70	1641.61	4771.51	9.53	0.225605E 06	9.091	0.126392E 06
8	7.7497	0.05399	0.06466	0.06490	0.16555010E 10	760.47	1609.35	4719.65	9.56	0.227829E 06	9.180	0.126392E 06
9	7.7702	0.05399	0.06490	0.06513	0.16554326E 10	751.09	1577.02	4667.23	9.58	0.230166E 06	9.275	0.126392E 06
10	7.7904	0.05399	0.06513	0.06537	0.16553444E 10	741.56	1544.67	4614.28	9.60	0.232617E 06	9.373	0.126392E 06
11	7.8102	0.05399	0.06537	0.06561	0.16552797E 10	731.88	1512.29	4560.80	9.62	0.235193E 06	9.477	0.126392E 06
12	7.8296	0.05399	0.06561	0.06585	0.16552033E 10	722.06	1479.91	4506.82	9.64	0.237896E 06	9.586	0.126392E 06
13	7.8487	0.05399	0.06585	0.06609	0.16551211E 10	712.10	1447.54	4452.36	9.66	0.240732E 06	9.700	0.126392E 06
14	7.8674	0.05399	0.06609	0.06633	0.16550726E 10	701.99	1415.20	4397.44	9.67	0.243713E 06	9.820	0.126392E 06
15	4.8962	0.03360	0.06633	0.06675	0.29516428E 10	608.41	1381.50	4395.89	10.20	0.475855E 06	37.966	0.638330E 05
16	11.4857	0.03360	0.06675	0.06718	0.29562519E 10	568.90	1273.94	3646.32	17.37	0.299095E 06	23.863	0.638330E 05

FIGURE 3 (Continued)

EFFECT 3

STAGE	WV	WS2	WP2	TV2	TS1	TS2	T1	T2	BRINE CFM	PROD CFM
1	0.14026179E 07	0.37399159E 09	0.64094403E 08	153.86	160.00	156.13	142.34	146.30	0.198090E 07	0.122749E 06
2	0.13939241E 07	0.37259766E 09	0.65488327E 08	149.99	156.13	152.26	138.47	142.34	0.214906E 07	0.324002E 06
3	0.13853270E 07	0.37121233E 09	0.66873653E 08	146.12	152.26	148.39	134.59	138.47	0.233439E 07	0.363688E 06
4	0.13767944E 07	0.36983554E 09	0.68250447E 08	142.25	148.39	144.52	130.71	134.59	0.253888E 07	0.408526E 06
5	0.13683325E 07	0.36846720E 09	0.69618779E 08	138.40	144.52	140.65	126.84	130.71	0.276486E 07	0.456591E 06
6	0.13599513E 07	0.36710725E 09	0.70978730E 08	134.55	140.65	136.78	122.97	126.84	0.301500E 07	0.513589E 06
7	0.13516650E 07	0.36575558E 09	0.72330395E 08	130.70	136.78	132.91	119.10	122.97	0.329238E 07	0.578111E 06
8	0.13434395E 07	0.36441214E 09	0.73673834E 08	126.85	132.91	129.04	115.23	119.10	0.360038E 07	0.651359E 06
9	0.13353007E 07	0.36307684E 09	0.75009134E 08	123.00	129.04	125.17	111.36	115.23	0.394307E 07	0.734669E 06
10	0.13272189E 07	0.36174962E 09	0.76336352E 08	119.15	125.17	121.30	107.48	111.36	0.432498E 07	0.829565E 06
11	0.13192331E 07	0.36043038E 09	0.77655585E 08	115.29	121.30	117.43	103.61	107.48	0.475157E 07	0.937850E 06
12	0.13113005E 07	0.35911908E 09	0.78966885E 08	111.44	117.43	113.56	99.74	103.61	0.522888E 07	0.106167E 07
13	0.13034374E 07	0.35781564E 09	0.80270322E 08	107.59	113.56	109.69	95.87	99.74	0.576418E 07	0.120350E 07
14	0.12956729E 07	0.35651997E 09	0.81565994E 08	103.74	109.69	105.82	92.00	95.87	0.636605E 07	0.136633E 07
15	0.22955334E 07	0.35422443E 09	0.83861527E 08	96.90	105.82	98.91	78.51	92.00	0.136767E 08	0.301534E 07
16	0.22713263E 07	0.35195310E 09	0.86132853E 08	90.00	98.91	92.00	65.00	78.51	0.165199E 08	0.385582E 07

FIGURE 3 (Continued)

EFFECT 3

ONE LEVEL OF ONE MODULE

STAGE	VAPOR VEL FT/SEC	TRAY FLOW LB/HR FT	TRAY WIDTH FT	RES TIME SEC	PV	DELP AVAILABLE	DELP REQUIRED	A	ALPHA	DTPD
1	30.783196	0.500000E 06	18.769711	3.843421	0.40910E 01	0.37084E-00	0.17428E-00	0.55656E 01	2.269	0.79
2	33.940341	0.500000E 06	18.699580	3.786995	0.37202E 01	0.34208E-00	0.17274E-00	0.57693E 01	2.269	0.80
3	36.489733	0.500000E 06	18.629883	3.831332	0.33781E 01	0.31518E-00	0.17122E-00	0.59841E 01	2.269	0.82
4	39.267506	0.500000E 06	18.560617	3.877323	0.30629E 01	0.28857E-00	0.16973E-00	0.62266E 01	2.269	0.84
5	42.422630	0.500000E 06	18.491777	3.913506	0.27744E 01	0.26539E-00	0.16825E-00	0.64646E 01	2.249	0.83
6	45.820348	0.500000E 06	18.423360	3.956195	0.25090E 01	0.24370E-00	0.16679E-00	0.67169E 01	2.229	0.83
7	49.541468	0.500000E 06	18.355363	4.000718	0.22653E 01	0.22345E-00	0.16536E-00	0.69845E 01	2.210	0.82
8	53.620896	0.500000E 06	18.287779	4.047170	0.20418E 01	0.20455E-00	0.16394E-00	0.72687E 01	2.191	0.82
9	58.098718	0.500000E 06	18.220607	4.095781	0.18373E 01	0.18690E-00	0.16254E-00	0.75717E 01	2.172	0.82
10	63.021574	0.500000E 06	18.153842	4.146542	0.16504E 01	0.17041E-00	0.16115E-00	0.78958E 01	2.153	0.81
11	68.442631	0.500000E 06	18.087481	4.199669	0.14800E 01	0.15499E-00	0.15979E-00	0.82443E 01	2.135	0.81
12	74.421314	0.500000E 06	18.021519	4.255208	0.13250E 01	0.14053E-00	0.15844E-00	0.86214E 01	2.117	0.81
13	81.028063	0.500000E 06	17.955954	4.313280	0.11845E 01	0.12695E-00	0.15711E-00	0.90328E 01	2.099	0.81
14	88.342905	0.500000E 06	17.890782	4.374125	0.10575E 01	0.19434E-00	0.15580E-00	0.72702E 01	2.081	0.80
15	47.452007	0.500000E 06	17.825998	17.514543	0.86317E 00	0.15866E-00	0.17129E-00	0.80093E 01	2.013	0.77
16	91.822251	0.500000E 06	17.711221	10.953794	0.70451E 00	0.	0.16877E-00	0.	2.003	0.79

FIGURE 3 (Continued)

EFFECT 3

STAGE	AREA DM	DPTDM	DTDM	CPROD	WIDDM
1	0.22242193E 02	0.30388641E-01	0.28874207E-00	0.26995629E-05	0.26164709E 01
2	0.23478901E 02	0.29610334E-01	0.30468750E-00	0.29346770E-05	0.27740311E 01
3	0.24707286E 02	0.29032193E-01	0.32395172E-00	0.31576872E-05	0.28935985E 01
4	0.26265358E 02	0.27847189E-01	0.33731842E-00	0.33943720E-05	0.30487875E 01
5	0.28609587E 02	0.25281657E-01	0.33287048E-00	0.36516581E-05	0.32903608E 01
6	0.31207912E 02	0.22932694E-01	0.32860565E-00	0.39339480E-05	0.35549803E 01
7	0.34092779E 02	0.20784061E-01	0.32463074E-00	0.42452621E-05	0.38452137E 01
8	0.37299594E 02	0.18820498E-01	0.32084656E-00	0.45897863E-05	0.41639064E 01
9	0.40871057E 02	0.17027736E-01	0.31731415E-00	0.49721632E-05	0.45142919E 01
10	0.44854841E 02	0.15392458E-01	0.31400299E-00	0.53976497E-05	0.49000201E 01
11	0.49306037E 02	0.13902215E-01	0.31089783E-00	0.58722601E-05	0.53252027E 01
12	0.54288008E 02	0.12545408E-01	0.30807495E-00	0.64029290E-05	0.57945098E 01
13	0.59873863E 02	0.11311212E-01	0.30547333E-00	0.69976742E-05	0.63132147E 01
14	0.66147739E 02	0.10189582E-01	0.30312347E-00	0.76658038E-05	0.68873177E 01
15	0.13527246E 03	0.78513830E-02	0.26778412E-00	0.71461472E-05	0.36524310E 01
16	0.16287155E 03	0.69870619E-02	0.28543091E-00	0.77255605E-05	0.69472852E 01

FIGURE 3 (Continued)

EFFECT 2

STAGE	TTD	CT	C1	C2	QN	UBAR	HI	HO	OM	AS	LS	TUBE NO
1	7.5592	0.04578	0.04826	0.04841	0.13826072E 10	966.98	2460.62	5947.27	8.97	0.159332E 06	5.751	0.141101E 06
2	7.5806	0.04578	0.04841	0.04856	0.13753386E 10	963.31	2442.14	5927.76	8.99	0.158842E 06	5.733	0.141101E 06
3	7.5862	0.04578	0.04856	0.04870	0.13753046E 10	959.60	2423.46	5909.44	8.99	0.159351E 06	5.752	0.141101E 06
4	7.6222	0.04578	0.04870	0.04885	0.13743867E 10	955.67	2404.55	5884.57	9.03	0.159273E 06	5.749	0.141101E 06
5	7.6258	0.04578	0.04885	0.04900	0.13752191E 10	951.81	2385.39	5865.24	9.03	0.159938E 06	5.773	0.141101E 06
6	7.6311	0.04578	0.04900	0.04915	0.13752058E 10	947.85	2365.98	5845.07	9.04	0.160507E 06	5.793	0.141101E 06
7	7.6640	0.04578	0.04915	0.04930	0.13742603E 10	943.68	2346.36	5819.05	9.07	0.160533E 06	5.794	0.141101E 06
8	7.6673	0.04578	0.04930	0.04945	0.13751260E 10	939.57	2326.49	5797.88	9.08	0.161264E 06	5.821	0.141101E 06
9	7.6725	0.04578	0.04945	0.04959	0.13751192E 10	935.36	2306.39	5775.87	9.08	0.161896E 06	5.844	0.141101E 06
10	7.7052	0.04578	0.04959	0.04974	0.13740323E 10	930.94	2286.10	5748.15	9.11	0.161966E 06	5.846	0.141101E 06
11	7.7080	0.04578	0.04974	0.04989	0.13750464E 10	926.56	2265.58	5725.21	9.12	0.162782E 06	5.876	0.141101E 06
12	7.7130	0.04578	0.04989	0.05004	0.13750111E 10	922.10	2244.83	5701.41	9.12	0.163476E 06	5.901	0.141101E 06
13	7.7456	0.04578	0.05004	0.05019	0.13738339E 10	917.42	2223.91	5672.04	9.15	0.163600E 06	5.905	0.141101E 06
14	7.6225	0.04578	0.05019	0.05034	0.13803679E 10	913.35	2202.63	5669.89	9.04	0.167265E 06	6.037	0.141101E 06
15	7.6390	0.04578	0.05034	0.05049	0.13750868E 10	908.57	2181.24	5642.88	9.05	0.167287E 06	6.038	0.141101E 06
16	7.6441	0.04578	0.05049	0.05064	0.13750671E 10	903.75	2159.70	5616.53	9.05	0.168082E 06	6.067	0.141101E 06
17	7.6492	0.04578	0.05064	0.05079	0.13750348E 10	898.84	2137.97	5589.60	9.06	0.168903E 06	6.096	0.141101E 06
18	7.6541	0.04578	0.05079	0.05094	0.13750344E 10	893.83	2116.06	5562.10	9.06	0.169754E 06	6.127	0.141101E 06
19	7.6591	0.04578	0.05094	0.05109	0.13750017E 10	888.74	2093.98	5534.02	9.07	0.170628E 06	6.159	0.141101E 06
20	7.6640	0.04578	0.05109	0.05124	0.13749804E 10	883.56	2071.72	5505.38	9.07	0.171533E 06	6.191	0.141101E 06
21	7.6888	0.04578	0.05124	0.05139	0.13739165E 10	878.21	2049.33	5472.79	9.10	0.171992E 06	6.208	0.141101E 06
22	7.6913	0.04578	0.05139	0.05154	0.13749232E 10	872.85	2026.76	5443.30	9.10	0.173106E 06	6.248	0.141101E 06
23	7.6960	0.04578	0.05154	0.05170	0.13748929E 10	867.40	2004.03	5413.03	9.10	0.174099E 06	6.284	0.141101E 06
24	7.7007	0.04578	0.05170	0.05185	0.13748886E 10	861.86	1981.15	5382.22	9.11	0.175127E 06	6.321	0.141101E 06
25	7.7054	0.04578	0.05185	0.05200	0.13748495E 10	856.23	1958.13	5350.87	9.11	0.176184E 06	6.359	0.141101E 06
26	7.7099	0.04578	0.05200	0.05215	0.13748459E 10	850.50	1934.97	5319.00	9.12	0.177280E 06	6.399	0.141101E 06
27	7.5196	0.05397	0.05215	0.05231	0.14649265E 10	851.54	1945.96	5268.89	9.13	0.188498E 06	7.595	0.126398E 06
28	7.7783	0.05397	0.05231	0.05247	0.14648996E 10	843.67	1918.79	5188.85	9.39	0.184949E 06	7.452	0.126398E 06
29	8.0370	0.05397	0.05247	0.05264	0.14648906E 10	835.74	1891.48	5110.57	9.65	0.181645E 06	7.319	0.126398E 06
30	8.2957	0.05397	0.05264	0.05280	0.14648557E 10	827.73	1864.02	5033.92	9.91	0.178562E 06	7.195	0.126398E 06

FIGURE 3 (Continued)

EFFECT 2

STAGE	WV	WS2	WP2	TV2	TS1	TS2	T1	T2	BRINE CFM	PROD CFM
1	0.13727736E 07	0.44443204E 09	0.25476762E 08	245.03	250.00	247.03	234.47	237.47	0.331357E 06	0.229286E 05
2	0.13655517E 07	0.44306649E 09	0.26842314E 08	242.05	247.03	244.05	231.49	234.47	0.346505E 06	0.145170E 05
3	0.13583677E 07	0.44170813E 09	0.28200682E 08	239.08	244.05	241.08	228.51	231.49	0.362521E 06	0.161389E 05
4	0.13512637E 07	0.44035686E 09	0.29551945E 08	236.13	241.08	238.10	225.53	228.51	0.379474E 06	0.177069E 05
5	0.13442009E 07	0.43901265E 09	0.30896146E 08	233.16	238.10	235.13	222.55	225.53	0.397414E 06	0.198013E 05
6	0.13372313E 07	0.43767542E 09	0.32233377E 08	230.18	235.13	232.15	219.57	222.55	0.416427E 06	0.218772E 05
7	0.13303136E 07	0.43634511E 09	0.33563691E 08	227.24	232.15	229.18	216.60	219.57	0.436570E 06	0.238966E 05
8	0.13234437E 07	0.43502166E 09	0.34887134E 08	224.26	229.18	226.21	213.62	216.60	0.457923E 06	0.265683E 05
9	0.13166619E 07	0.43370500E 09	0.36203796E 08	221.29	226.21	223.23	210.64	213.62	0.480582E 06	0.292290E 05
10	0.13098951E 07	0.43239510E 09	0.37513690E 08	218.34	223.23	220.26	207.66	210.64	0.504612E 06	0.318058E 05
11	0.13032384E 07	0.43109187E 09	0.38816928E 08	215.37	220.26	217.28	204.68	207.66	0.530148E 06	0.352457E 05
12	0.12966007E 07	0.42979526E 09	0.40113529E 08	212.39	217.28	214.31	201.70	204.68	0.557261E 06	0.386621E 05
13	0.12900297E 07	0.42850523E 09	0.41403558E 08	209.45	214.31	211.33	198.73	201.70	0.586083E 06	0.419604E 05
14	0.12835740E 07	0.42722165E 09	0.42687132E 08	206.35	211.33	208.36	195.73	198.73	0.616763E 06	0.484743E 05
15	0.12771352E 07	0.42594451E 09	0.43964268E 08	203.37	208.36	205.39	192.76	195.73	0.649389E 06	0.509212E 05
16	0.12707359E 07	0.42467378E 09	0.45235003E 08	200.40	205.39	202.41	189.78	192.76	0.684117E 06	0.557210E 05
17	0.12643788E 07	0.42340940E 09	0.46499381E 08	197.43	202.41	199.44	186.80	189.78	0.721105E 06	0.609479E 05
18	0.12581043E 07	0.42215129E 09	0.47757486E 08	194.45	199.44	196.46	183.82	186.80	0.760545E 06	0.666418E 05
19	0.12518509E 07	0.42089944E 09	0.49009336E 08	191.48	196.46	193.49	180.84	183.82	0.802588E 06	0.728466E 05
20	0.12456588E 07	0.41965378E 09	0.50254995E 08	188.50	193.49	190.51	177.86	180.84	0.847458E 06	0.796107E 05
21	0.12395044E 07	0.41841427E 09	0.51494499E 08	185.55	190.51	187.54	174.88	177.86	0.895358E 06	0.863686E 05
22	0.12334261E 07	0.41718084E 09	0.52727924E 08	182.57	187.54	184.57	171.90	174.88	0.946554E 06	0.949942E 05
23	0.12273730E 07	0.41595346E 09	0.53955297E 08	179.60	184.57	181.59	168.92	171.90	0.100127E 07	0.103774E 06
24	0.12213955E 07	0.41473207E 09	0.55176692E 08	176.63	181.59	178.62	165.95	168.92	0.105982E 07	0.113361E 06
25	0.12154295E 07	0.41351664E 09	0.56392122E 08	173.65	178.62	175.64	162.97	165.95	0.112247E 07	0.123835E 06
26	0.12095456E 07	0.41230709E 09	0.57601667E 08	170.68	175.64	172.67	159.99	162.97	0.118961E 07	0.135283E 06
27	0.12824258E 07	0.41102467E 09	0.58884093E 08	167.51	172.67	169.50	156.56	159.99	0.134972E 07	0.158188E 06
28	0.12758299E 07	0.40974883E 09	0.60159922E 08	164.34	169.50	166.33	153.13	156.56	0.143798E 07	0.173863E 06
29	0.12693058E 07	0.40847953E 09	0.61429228E 08	161.17	166.33	163.16	149.70	153.13	0.153318E 07	0.191127E 06
30	0.12628091E 07	0.40721671E 09	0.62692037E 08	158.00	163.16	159.99	146.28	149.70	0.163592E 07	0.210153E 06

FIGURE 3 (Continued)

EFFECT 2

ONE LEVEL OF ONE MODULE

STAGE	VAPOR VEL FT/SEC	TRAY FLOW LB/HR FT	TRAY WIDTH FT	RES TIME SEC	PV	DELP AVAILABLE	DELP REQUIRED	A	ALPHA	DTPD
1	8.119955	0.500000E 06	22.290241	2.330198	0.27325E 02	0.14131E 01	0.18229E-00	0.34627E 01	2.000	0.50
2	8.519526	0.500000E 06	22.221602	2.325800	0.25912E 02	0.13530E 01	0.18091E-00	0.35254E 01	2.000	0.50
3	8.882511	0.500000E 06	22.153325	2.337204	0.24559E 02	0.12818E 01	0.17954E-00	0.36083E 01	2.000	0.50
4	9.302803	0.500000E 06	22.085406	2.339276	0.23277E 02	0.12390E 01	0.17819E-00	0.36563E 01	1.970	0.50
5	9.698795	0.500000E 06	22.017843	2.353142	0.22038E 02	0.11845E 01	0.17685E-00	0.37255E 01	1.970	0.50
6	10.123781	0.500000E 06	21.950633	2.365485	0.20854E 02	0.11215E 01	0.17553E-00	0.38143E 01	1.970	0.50
7	10.611644	0.500000E 06	21.883771	2.369149	0.19732E 02	0.10812E 01	0.17422E-00	0.38702E 01	1.942	0.50
8	11.076121	0.500000E 06	21.817255	2.384049	0.18651E 02	0.10320E 01	0.17293E-00	0.39468E 01	1.942	0.50
9	11.575162	0.500000E 06	21.751083	2.397369	0.17619E 02	0.97553E 00	0.17165E-00	0.40444E 01	1.942	0.50
10	12.148285	0.500000E 06	21.685250	2.401682	0.16643E 02	0.93900E 00	0.17039E-00	0.41071E 01	1.914	0.50
11	12.693913	0.500000E 06	21.619755	2.417945	0.15704E 02	0.89474E 00	0.16914E-00	0.41920E 01	1.914	0.50
12	13.281865	0.500000E 06	21.554593	2.432258	0.14810E 02	0.84434E 00	0.16790E-00	0.42996E 01	1.914	0.50
13	13.957423	0.500000E 06	21.489763	2.437384	0.13965E 02	0.84471E 00	0.16668E-00	0.42830E 01	1.887	0.50
14	14.341111	0.500000E 06	21.425261	2.499535	0.13121E 02	0.77014E 00	0.16546E-00	0.44692E 01	2.012	0.63
15	15.097606	0.500000E 06	21.361083	2.503048	0.12350E 02	0.73212E 00	0.16427E-00	0.45672E 01	2.012	0.64
16	15.823863	0.500000E 06	21.297226	2.519024	0.11618E 02	0.69556E 00	0.16308E-00	0.46688E 01	2.012	0.65
17	16.592112	0.500000E 06	21.233689	2.535403	0.10923E 02	0.66043E 00	0.16191E-00	0.47742E 01	2.012	0.65
18	17.405119	0.500000E 06	21.170470	2.552282	0.10262E 02	0.62669E 00	0.16075E-00	0.48835E 01	2.012	0.66
19	18.265916	0.500000E 06	21.107565	2.569545	0.96356E 01	0.59430E 00	0.15961E-00	0.49969E 01	2.012	0.66
20	19.177633	0.500000E 06	21.044972	2.587301	0.90413E 01	0.55958E 00	0.15847E-00	0.51313E 01	2.012	0.67
21	20.203498	0.500000E 06	20.982689	2.597807	0.84817E 01	0.53367E 00	0.15735E-00	0.52358E 01	1.992	0.68
22	21.210930	0.500000E 06	20.920714	2.618966	0.79480E 01	0.50515E 00	0.15624E-00	0.53626E 01	1.992	0.69
23	22.299400	0.500000E 06	20.859042	2.638169	0.74429E 01	0.47785E-00	0.15514E-00	0.54942E 01	1.992	0.70
24	23.454539	0.500000E 06	20.797673	2.657952	0.69650E 01	0.45174E-00	0.15405E-00	0.56309E 01	1.992	0.70
25	24.680931	0.500000E 06	20.736604	2.678206	0.65133E 01	0.42679E-00	0.15298E-00	0.57730E 01	1.992	0.71
26	25.983699	0.500000E 06	20.675832	2.699099	0.60865E 01	0.42856E-00	0.15191E-00	0.57410E 01	1.992	0.72
27	24.553324	0.500000E 06	20.615355	3.244357	0.56579E 01	0.40281E-00	0.17637E-00	0.59009E 01	1.992	0.75
28	26.692081	0.500000E 06	20.551233	3.183228	0.52551E 01	0.37833E-00	0.17507E-00	0.60665E 01	1.992	0.75
29	29.010013	0.500000E 06	20.487442	3.126382	0.48768E 01	0.35507E-00	0.17378E-00	0.62390E 01	1.992	0.76
30	31.523041	0.500000E 06	20.423976	3.073419	0.45217E 01	0.	0.17251E-00	0.	1.992	0.77

FIGURE 3 (Continued)

EFFECT 2

STAGE	AREA DM	DPTDM	DTDM	CPROD	WIDDM
1	0.	0.	0.	0.20405639E-03	0.13871479E 01
2	0.	0.	0.	0.20279183E-03	0.14136158E 01
3	0.	0.	0.	0.20172396E-03	0.14323888E 01
4	0.	0.	0.	0.20062026E-03	0.14568701E 01
5	0.	0.	0.	0.19958463E-03	0.14757834E 01
6	0.	0.	0.	0.19857212E-03	0.14962951E 01
7	0.	0.	0.	0.19752889E-03	0.15225133E 01
8	0.	0.	0.	0.19651418E-03	0.15431824E 01
9	0.	0.	0.	0.19667247E-03	0.15731715E 01
10	0.	0.	0.	0.19856653E-03	0.16158503E 01
11	0.	0.	0.	0.20163955E-03	0.16511675E 01
12	0.	0.	0.	0.20576398E-03	0.16895992E 01
13	0.	0.	0.	0.21102032E-03	0.17373231E 01
14	0.10555774E 02	0.36808719E-01	0.13402557E-00	0.19655973E-03	0.17767844E 01
15	0.10862663E 02	0.36503416E-01	0.13971710E-00	0.18402116E-03	0.18199287E 01
16	0.11194105E 02	0.36140385E-01	0.14549255E-00	0.17304635E-03	0.18734498E 01
17	0.11527266E 02	0.35833685E-01	0.15177917E-00	0.16335942E-03	0.19176987E 01
18	0.11879205E 02	0.35505205E-01	0.15830994E-00	0.15474661E-03	0.19662814E 01
19	0.12260450E 02	0.35115581E-01	0.16495514E-00	0.14703939E-03	0.20264908E 01
20	0.12643593E 02	0.34788278E-01	0.17225647E-00	0.14010160E-03	0.20762783E 01
21	0.13049141E 02	0.34437390E-01	0.17983246E-00	0.13382389E-03	0.21311667E 01
22	0.13489497E 02	0.34022148E-01	0.18751526E-00	0.12811700E-03	0.21991327E 01
23	0.13932022E 02	0.33675207E-01	0.19600677E-00	0.12290613E-03	0.22553582E 01
24	0.14412325E 02	0.33263377E-01	0.20459747E-00	0.11813260E-03	0.23253481E 01
25	0.14902737E 02	0.32897331E-01	0.21394348E-00	0.11374392E-03	0.23877578E 01
26	0.15434042E 02	0.32470389E-01	0.22347260E-00	0.10969669E-03	0.24639606E 01
27	0.16489574E 02	0.33658788E-01	0.24572754E-00	0.10571426E-03	0.22180960E 01
28	0.17258183E 02	0.32814004E-01	0.25476837E-00	0.10203990E-03	0.23728212E 01
29	0.18057394E 02	0.32015643E-01	0.26454163E-00	0.98640763E-04	0.25255151E 01
30	0.18929662E 02	0.31151238E-01	0.27417755E-00	0.95489870E-04	0.27005094E 01

EFFECT 1

STAGE	TTD	CT	C1	C2	QN	UBAR	HI	HO	OM	AS	LS	TUBE NO
1	6.3093	0.03744	0.03744	0.03752	0.11428861E 10	602.95	2676.54	7772.22	7.26	0.261070E 06	7.437	0.178773E 06
2	6.3131	0.03744	0.03752	0.03760	0.11429103E 10	656.24	2667.05	7545.57	7.26	0.239746E 06	6.830	0.178773E 06
3	6.3171	0.03744	0.03760	0.03768	0.11428868E 10	719.60	2657.48	7306.87	7.27	0.218513E 06	6.225	0.178773E 06
4	6.3210	0.03744	0.03768	0.03776	0.11428537E 10	796.14	2647.85	7054.40	7.27	0.197395E 06	5.623	0.178773E 06
5	6.3248	0.03744	0.03776	0.03784	0.11428841E 10	890.32	2638.18	6785.98	7.28	0.176425E 06	5.026	0.178773E 06
6	6.3581	0.03744	0.03784	0.03792	0.11426154E 10	1008.64	2628.52	6490.66	7.31	0.154982E 06	4.415	0.178773E 06
7	6.3616	0.03744	0.03792	0.03800	0.11428025E 10	1006.77	2618.18	6483.03	7.31	0.155219E 06	4.422	0.178773E 06
8	6.3653	0.03744	0.03800	0.03808	0.11428021E 10	1004.86	2607.70	6475.02	7.32	0.155433E 06	4.428	0.178773E 06
9	6.3690	0.03744	0.03808	0.03816	0.11427762E 10	1002.92	2597.11	6466.69	7.32	0.155651E 06	4.434	0.178773E 06
10	6.3401	0.03744	0.03816	0.03824	0.11431814E 10	1001.16	2586.36	6466.96	7.29	0.156595E 06	4.461	0.178773E 06
11	6.3445	0.03744	0.03824	0.03832	0.11427974E 10	999.14	2575.52	6457.86	7.30	0.156770E 06	4.466	0.178773E 06
12	6.3483	0.03744	0.03832	0.03840	0.11428107E 10	997.10	2564.55	6448.54	7.30	0.157013E 06	4.473	0.178773E 06
13	6.3520	0.03744	0.03840	0.03848	0.11427846E 10	995.01	2553.46	6438.91	7.30	0.157257E 06	4.480	0.178773E 06
14	6.3557	0.03744	0.03848	0.03856	0.11427748E 10	992.89	2542.25	6428.96	7.31	0.157511E 06	4.487	0.178773E 06
15	6.3594	0.03744	0.03856	0.03864	0.11427668E 10	990.74	2530.92	6418.69	7.31	0.157772E 06	4.495	0.178773E 06
16	6.3214	0.04576	0.03864	0.03873	0.11667168E 10	989.93	2535.87	6350.33	7.50	0.157045E 06	5.668	0.141105E 06
17	6.7960	0.04576	0.03873	0.03881	0.11666845E 10	984.28	2521.63	6218.27	7.98	0.148471E 06	5.359	0.141105E 06
18	7.2968	0.04576	0.03881	0.03889	0.11661237E 10	978.60	2507.22	6090.08	8.49	0.140396E 06	5.067	0.141105E 06
19	7.7702	0.04576	0.03889	0.03897	0.11666381E 10	973.17	2492.62	5976.49	8.96	0.133724E 06	4.827	0.141105E 06
20	8.2446	0.04576	0.03897	0.03906	0.11666490E 10	967.82	2477.84	5870.00	9.44	0.127665E 06	4.608	0.141105E 06

FIGURE 3 (Continued)

EFFECT 1

STAGE	WV	WS2	WP2	TV2	TS1	TS2	T1	T2	BRINE CFM	PROD CFM
1	0.12416350E 07	0.57881962E 09	0.12416350E 07	286.21	290.00	288.01	277.91	279.90	0.157824E 06	-0.835104E 05
2	0.12370314E 07	0.57758259E 09	0.24786664E 07	284.22	288.01	286.02	275.91	277.91	0.161890E 06	0.232887E 03
3	0.12324088E 07	0.57635017E 09	0.37110752E 07	282.23	286.02	284.03	273.92	275.91	0.166089E 06	0.479707E 03
4	0.12278030E 07	0.57512236E 09	0.49388782E 07	280.24	284.03	282.04	271.93	273.92	0.170430E 06	0.741232E 03
5	0.12232985E 07	0.57389906E 09	0.61621767E 07	278.25	282.04	280.05	269.93	271.93	0.174932E 06	0.101828E 04
6	0.12187272E 07	0.57268033E 09	0.73809039E 07	276.29	280.05	278.06	267.94	269.93	0.179576E 06	0.129170E 04
7	0.12142543E 07	0.57146607E 09	0.85951581E 07	274.30	278.06	276.07	265.95	267.94	0.184392E 06	0.162175E 04
8	0.12098014E 07	0.57025627E 09	0.98049595E 07	272.31	276.07	274.08	263.95	265.95	0.189377E 06	0.195067E 04
9	0.12053544E 07	0.56905091E 09	0.11010314E 08	270.32	274.08	272.09	261.96	263.95	0.194533E 06	0.229891E 04
10	0.12009777E 07	0.56784993E 09	0.12211291E 08	268.30	272.09	270.10	259.97	261.96	0.199880E 06	0.271272E 04
11	0.11965929E 07	0.56665333E 09	0.13407884E 08	266.31	270.10	268.11	257.97	259.97	0.205411E 06	0.305943E 04
12	0.11922732E 07	0.56546105E 09	0.14600157E 08	264.32	268.11	266.12	255.98	257.97	0.211147E 06	0.347265E 04
13	0.11879400E 07	0.56427310E 09	0.15788097E 08	262.33	266.12	264.13	253.99	255.98	0.217083E 06	0.390997E 04
14	0.11836483E 07	0.56308945E 09	0.16971745E 08	260.34	264.13	262.15	251.99	253.99	0.223236E 06	0.437274E 04
15	0.11793886E 07	0.56191006E 09	0.18151134E 08	258.35	262.15	260.16	250.00	251.99	0.229615E 06	0.486241E 04
16	0.11997554E 07	0.56071029E 09	0.19350889E 08	256.32	260.16	258.12	247.49	250.00	0.241334E 06	0.549723E 04
17	0.11953458E 07	0.55951494E 09	0.20546235E 08	254.29	258.12	256.09	244.99	247.49	0.248483E 06	0.606939E 04
18	0.11910073E 07	0.55832393E 09	0.21737242E 08	252.28	256.09	254.06	242.48	244.99	0.255911E 06	0.658609E 04
19	0.11866496E 07	0.55713727E 09	0.22923892E 08	250.25	254.06	252.03	239.98	242.48	0.263612E 06	0.731392E 04
20	0.11823688E 07	0.55595490E 09	0.24106260E 08	248.22	252.03	250.00	237.47	239.98	0.271618E 06	0.799342E 04

EFFECT 1

ONE LEVEL OF ONE MODULE

STAGE	VAPOR VEL FT/SEC	TRAY FLOW LB/HR FT	TRAY WIDTH FT	RES TIME SEC	PV	DELP AVAILABLE	DELP REQUIRED	A	ALPHA	DTPD
1	2.935736	0.500000E 06	29.003063	2.986259	0.54183E 02	0.16555E 01	0.18739E-00	0.42212E 01	1.801	0.50
2	3.297531	0.500000E 06	28.940981	2.730100	0.52527E 02	0.16149E 01	0.18638E-00	0.42625E 01	1.801	0.50
3	3.736648	0.500000E 06	28.879129	2.474449	0.50912E 02	0.15750E 01	0.18538E-00	0.43046E 01	1.801	0.50
4	4.279123	0.500000E 06	28.817509	2.219637	0.49337E 02	0.15358E 01	0.18439E-00	0.43475E 01	1.801	0.50
5	4.963968	0.500000E 06	28.756118	1.966062	0.47802E 02	0.14754E 01	0.18341E-00	0.44238E 01	1.801	0.50
6	5.878335	0.500000E 06	28.694953	1.706142	0.46326E 02	0.14600E 01	0.18244E-00	0.44352E 01	1.771	0.50
7	6.025782	0.500000E 06	28.634017	1.710852	0.44866E 02	0.14229E 01	0.18147E-00	0.44807E 01	1.771	0.50
8	6.179208	0.500000E 06	28.573304	1.715281	0.43443E 02	0.13865E 01	0.18051E-00	0.45272E 01	1.771	0.50
9	6.337628	0.500000E 06	28.512813	1.719747	0.42057E 02	0.13726E 01	0.17956E-00	0.45381E 01	1.771	0.50
10	6.468253	0.500000E 06	28.452545	1.733133	0.40684E 02	0.13151E 01	0.17861E-00	0.46241E 01	1.804	0.55
11	6.639052	0.500000E 06	28.392496	1.737069	0.39369E 02	0.12806E 01	0.17768E-00	0.46735E 01	1.804	0.55
12	6.812753	0.500000E 06	28.332666	1.741841	0.38088E 02	0.12469E 01	0.17675E-00	0.47240E 01	1.804	0.56
13	6.992212	0.500000E 06	28.273052	1.746627	0.36842E 02	0.12138E 01	0.17582E-00	0.47755E 01	1.804	0.56
14	7.177560	0.500000E 06	28.213655	1.751529	0.35628E 02	0.11813E 01	0.17491E-00	0.48281E 01	1.804	0.56
15	7.369079	0.500000E 06	28.154472	1.756521	0.34446E 02	0.11732E 01	0.17400E-00	0.48321E 01	1.804	0.56
16	6.007450	0.500000E 06	28.095503	2.266887	0.33273E 02	0.11407E 01	0.18446E-00	0.48878E 01	1.804	0.56
17	6.574358	0.500000E 06	28.035515	2.134941	0.32133E 02	0.10947E 01	0.18349E-00	0.49762E 01	1.804	0.56
18	7.197170	0.500000E 06	27.975747	2.010520	0.31038E 02	0.10780E 01	0.18252E-00	0.50014E 01	1.777	0.57
19	7.820505	0.500000E 06	27.916197	1.907857	0.29960E 02	0.10475E 01	0.18156E-00	0.50605E 01	1.777	0.57
20	8.480560	0.500000E 06	27.856864	1.814603	0.28912E 02	0.	0.18061E-00	0.	1.777	0.57

EFFECT 1

STAGE	AREA DM	DPTDM	DTDM	CPROD	WIDDM
1	0.	0.	0.	0.25673961E-03	0.77204482E 00
2	0.	0.	0.	0.25099991E-03	0.84339525E 00
3	0.	0.	0.	0.24516102E-03	0.92808404E 00
4	0.	0.	0.	0.23921103E-03	0.10301550E 01
5	0.	0.	0.	0.23313618E-03	0.11554217E 01
6	0.	0.	0.	0.22685908E-03	0.13176041E 01
7	0.	0.	0.	0.22222082E-03	0.13271390E 01
8	0.	0.	0.	0.21860510E-03	0.13370831E 01
9	0.	0.	0.	0.21567113E-03	0.13472121E 01
10	0.60290720E 01	0.35862184E-01	0.52192688E-01	0.19477996E-03	0.13575219E 01
11	0.60847612E 01	0.35974732E-01	0.53764343E-01	0.17766015E-03	0.13680199E 01
12	0.61404931E 01	0.36097791E-01	0.55465698E-01	0.16337269E-03	0.13842475E 01
13	0.61988457E 01	0.36207758E-01	0.57136536E-01	0.15126742E-03	0.13946322E 01
14	0.62584034E 01	0.36318058E-01	0.58914185E-01	0.14087868E-03	0.14057465E 01
15	0.63195522E 01	0.36427597E-01	0.60691833E-01	0.13186430E-03	0.14170695E 01
16	0.65812054E 01	0.35989011E-01	0.61668396E-01	0.12382798E-03	0.11701036E 01
17	0.66293242E 01	0.36254596E-01	0.63888550E-01	0.11674260E-03	0.12461771E 01
18	0.66789947E 01	0.36516478E-01	0.66230774E-01	0.11044805E-03	0.13278959E 01
19	0.67328639E 01	0.36753888E-01	0.68618774E-01	0.10481872E-03	0.14047536E 01
20	0.67892807E 01	0.36981712E-01	0.71044922E-01	0.99753970E-04	0.14832756E 01

FIGURE 3 (Continued)

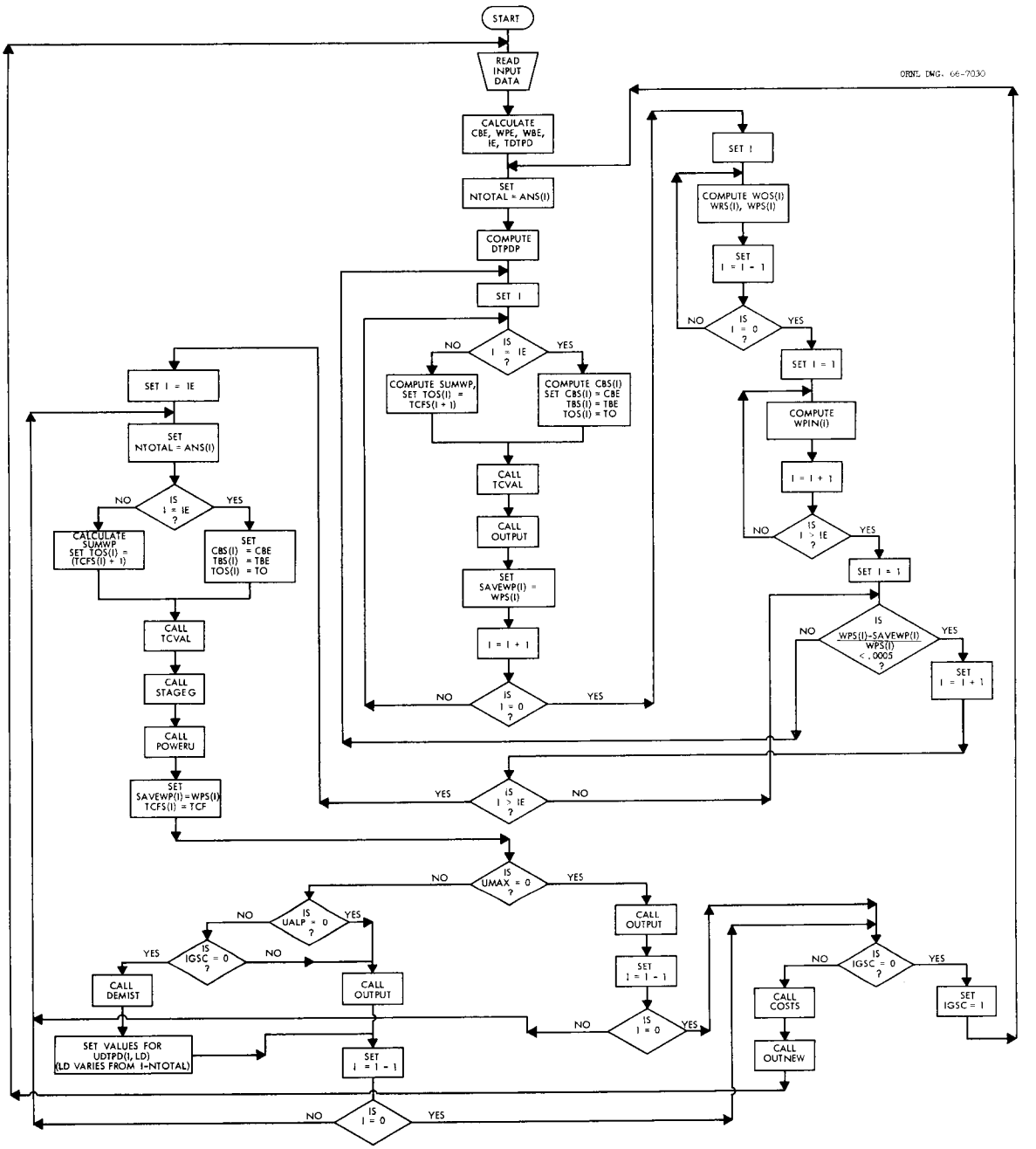

FIGURE 4. MULTI-EFFECT MULTI-EFFECT STAGE FLASH PROGRAM

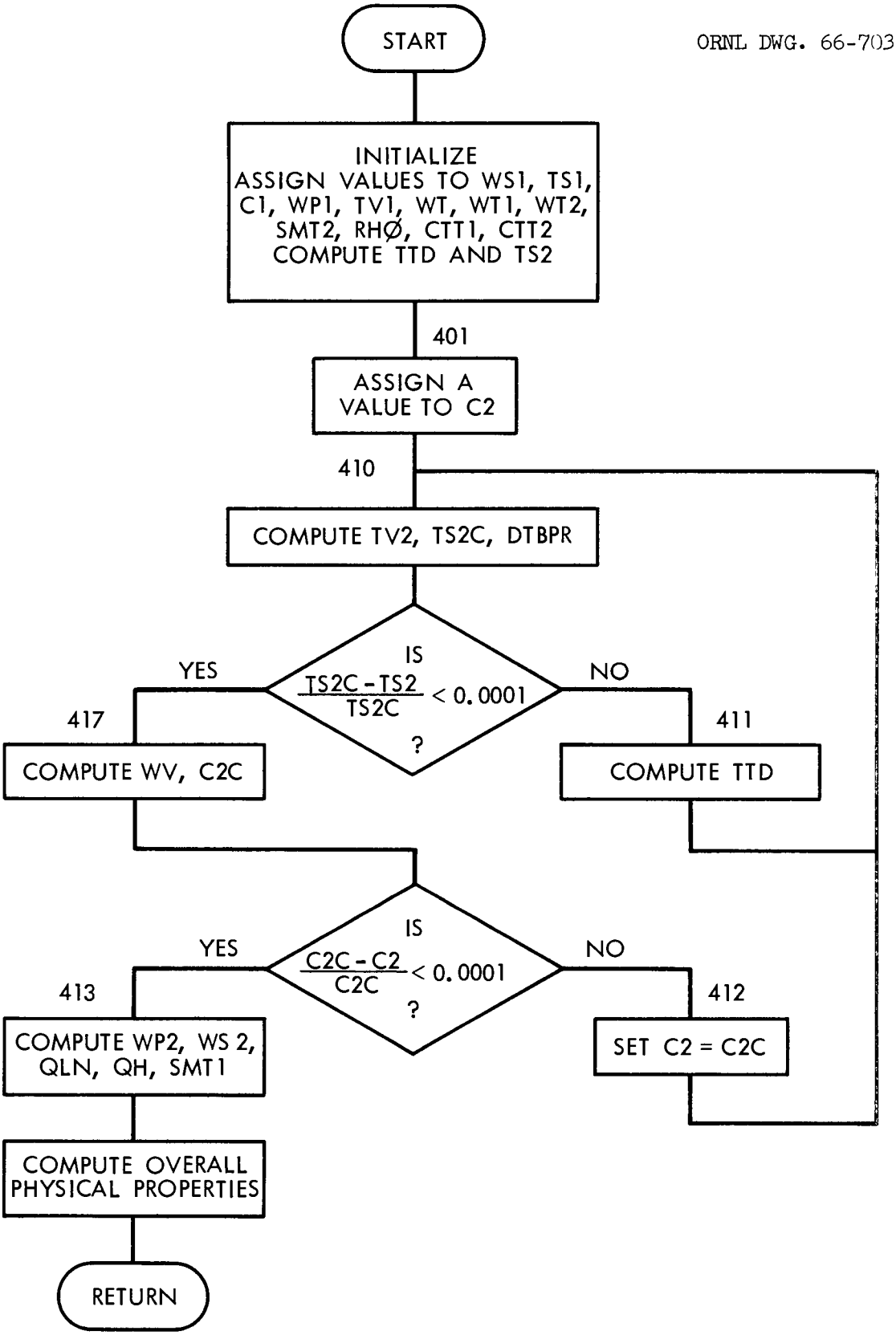

FIGURE 5. SUBROUTINE GSC

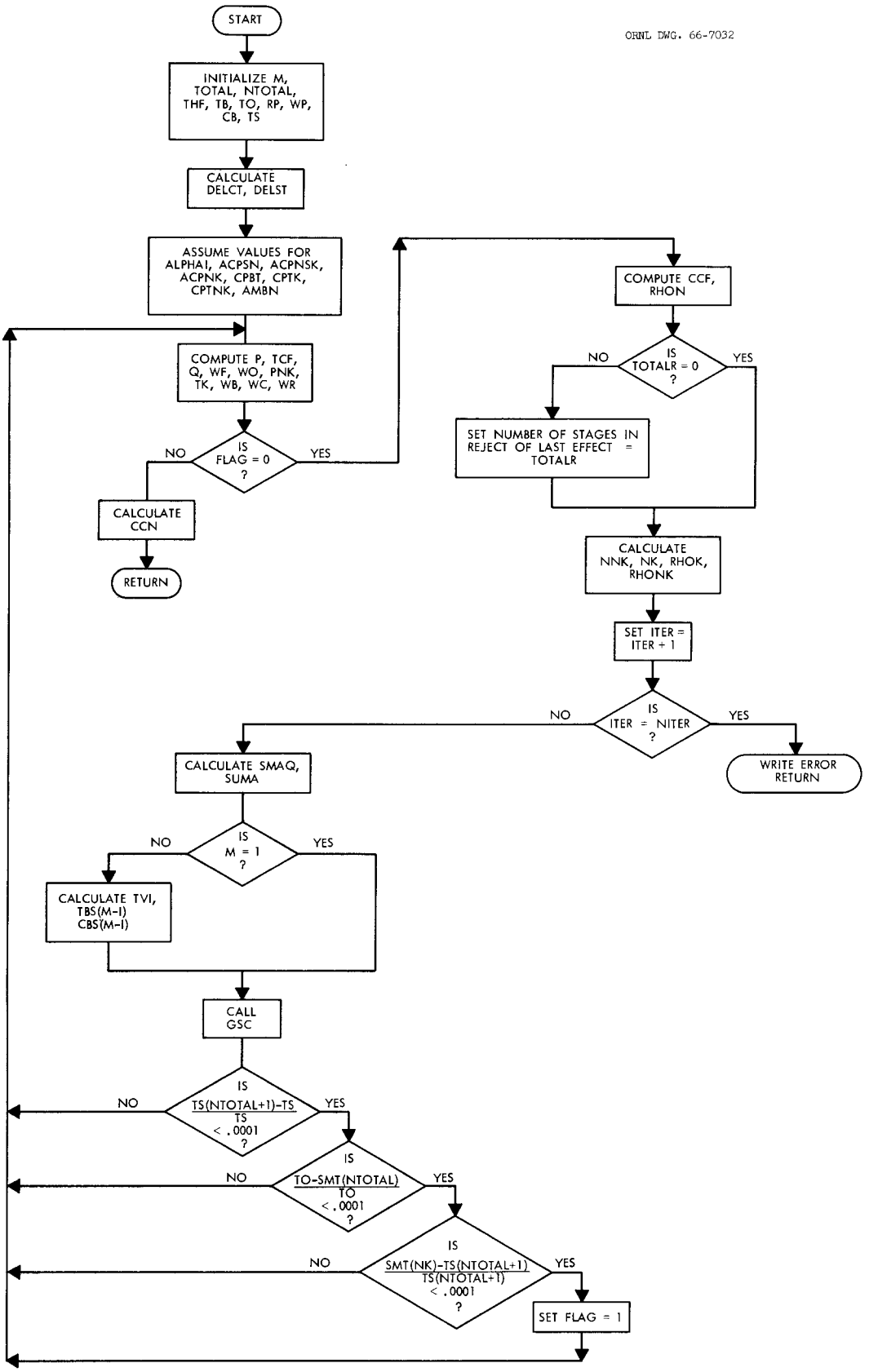

FIGURE 6. SUBROUTINE TCVAL

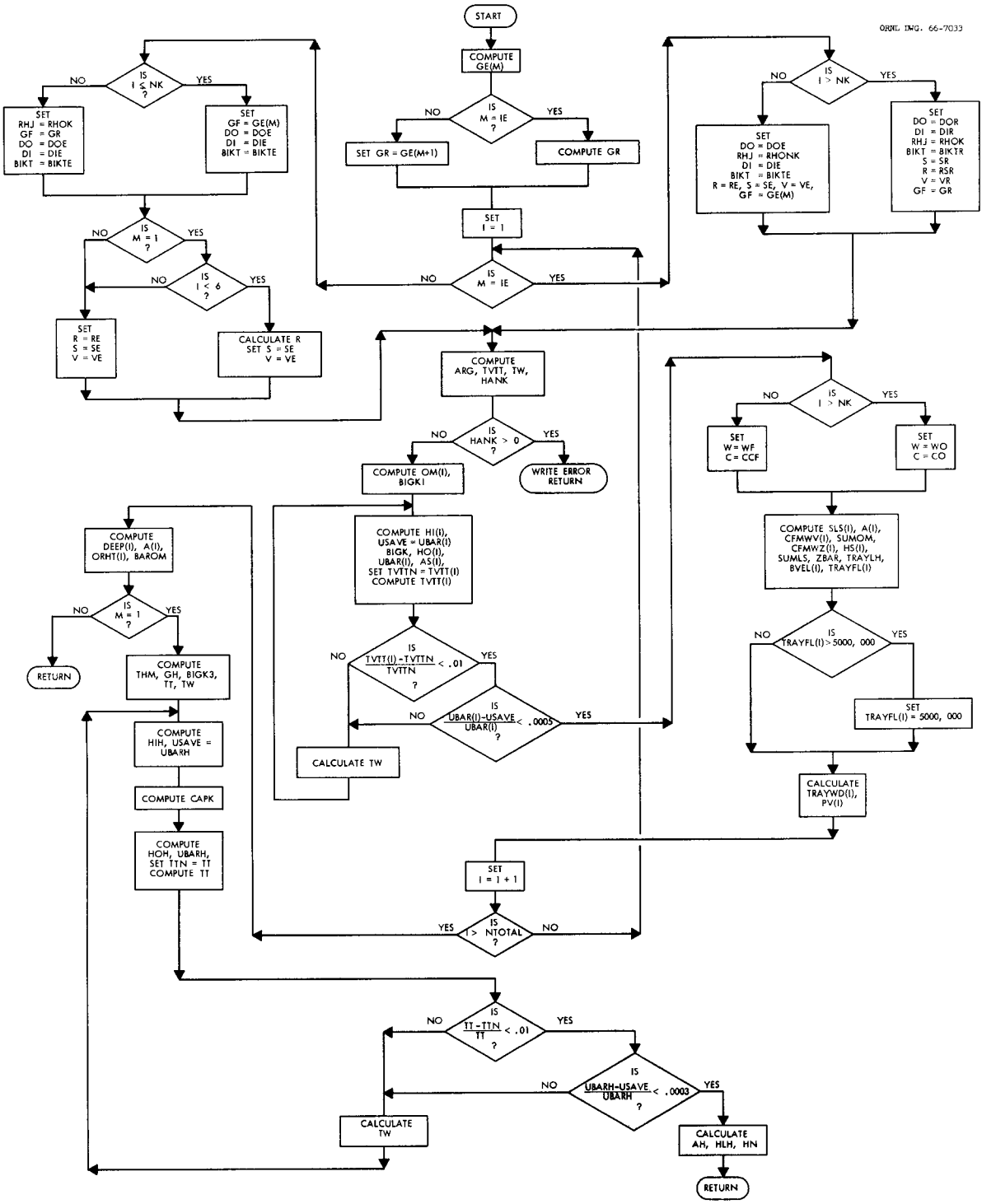

FIGURE 7. SUBROUTINE STAGEG

```
*ID  MOTHERSHDDEMISTER FOR TERRY VERSION 2            8/20/65
*CHARGE(4025)
*DUMP(60000,77461,D)
*TAPE(10,INPUT)(9,OUTPUT)
*TAPE( 5,INPUT)(6,OUTPUT)
*TAPE(7,POOL)
*ASSIGN(7,A7)
*TAPE(8,POOL)
*ASSIGN(8,A8)
*DUMP*(57700,77461,D)
*EXECUTE
*     LABEL                                                          MAN0001
C     MULTI-EFFECT MULTI-FLASH PROGRAM  3/9/65    PARSLEY            MAN0002
C     MAIN PROG FOR MULTI-EFFECT MULTI STAGE 3-18-65 PARSLEY AND MOTHERSMAN0003
      COMMON X,Y,W                                                    MAN0004
      COMMON DATANO                                                   MAN0005
      DIMENSIONX(150,4),Y(150)                                        MAN0006
      EQUIVALENCE(II,II)                                              MAN0007
      EQUIVALENCE        (Y(1),CR),       (Y(2),RP),       (Y(3),HC1),      MAN0008
     1(Y(4),CC1),        (Y(5),PCR1),     (Y(6),PCE1),     (Y(7),PCBH1),    MAN0009
     2(Y(8),PCM1),       (Y(9),PMC1),     (Y(10),SITE1),   (Y(11),WAIT1),   MAN0010
     3(Y(12),ES1),       (Y(13),FA1),     (Y(14),BHC1),    (Y(15),VPC1),    MAN0011
     4(Y(16),EEC1),      (Y(17),OC1),     (Y(18),SCM1),    (Y(19),CIBC1),   MAN0012
     5(Y(20),DEA1),      (Y(21),TC1)                                      MAN0013
      EQUIVALENCE        (Y(25),G),       (Y(26),TOTAL),   (Y(27),TSTEAM),  MAN0014
     1(Y(28),THF),       (Y(29),TO),      (Y(30),TA),      (Y(31),CO),      MAN0015
     2(Y(32),CP),                         (Y(34),O),                        MAN0016
     3(Y(36),U)                                                            MAN0017
      EQUIVALENCE        (Y(40),FFHL),    (Y(41),CAPF),    (Y(42),SMALLE),  MAN0018
     1(Y(43),HD),        (Y(44),HR),      (Y(45),HE),      (Y(46),HH),      MAN0019
     2(Y(47),HBL),       (Y(48),HPR),     (Y(49),SMALLD),(Y(50),SMALLB),    MAN0020
     3(Y(51),SMALLP),    (Y(52),SMAPPP),  (Y(53),SMAPPH),(Y(54),SMA1),      MAN0021
     4(Y(55),SMA2),      (Y(56),A3),      (Y(57),A4),      (Y(58),RATEIN),  MAN0022
     5(Y(59),TP)                                                           MAN0023
      EQUIVALENCE        (Y(75),PN),      (Y(76),RPN),     (Y(77),ALPBAR),  MAN0024
     1(Y(78),BAROM),     (Y(79),TB),      (Y(80),TCF),     (Y(81),AMBN),    MAN0025
     2(Y(82),CSUBP),     (Y(83),ACPSN),   (Y(84),ACPTNK),(Y(85),UBPH),     MAN0026
     3(Y(86),PO),        (Y(87),WX),      (Y(88),WR),      (Y(89),WC),      MAN0027
     4(Y(90),WB),        (Y(91),WY)                                        MAN0028
      EQUIVALENCE        (Y(100),SH),     (Y(101),SE),     (Y(102),SR),     MAN0029
     1(Y(103),BIKTH),    (Y(104),BIKTE),  (Y(105),BIKTR),(Y(106),VH),      MAN0030
     2(Y(107),VE),       (Y(108),VR),     (Y(109),DOH),    (Y(110),DOE),    MAN0031
     3(Y(111),DOR),      (Y(112),DIH),    (Y(113),DIE),    (Y(114),DIR),    MAN0032
     4(Y(115),RH),       (Y(116),RE),     (Y(117),RSR),    (Y(118),RHONK),  MAN0033
     5(Y(119),RHOK),     (Y(120),WF),                      (Y(122),WO),     MAN0034
     6(Y(123),NK),       (Y(124),NNK),    (Y(125),UBARH),(Y(126),UBARE),    MAN0035
     7(Y(127),UBARR),     (Y(128),AH),     (Y(129),AE),     (Y(130),AR),    MAN0036
     8(Y(131),HLH),      (Y(132),ELE),    (Y(133),RLR),    (Y(134),HN),     MAN0037
     9(Y(135),ENE),(Y(136),RNR),(Y(137),HBH),(Y(138),HFE),(Y(139),HFR)     MAN0038
      COMMONNTOTAL,TS,THF,TO,CO,CP,CR,V,G,SMAPP,SMALLD,SMALLE,DO,DI,       MAN0039
     1H,SMALLB,SMALLP,SMA1,SMA2,O,U,ERR,II,JJ,KK                           MAN0040
      COMMON HP,CT,C,QH,SMT,TTABLE,TTD,TV,WP,WS,WV                         MAN0041
      COMMON DELST,DELCT,CB,RHO,SUMQH,TB,TCF,TK,TOTAL,T,WB,WC,WF,WO,      MAN0042
     1WPN,WR,AMBDA                                                         MAN0043
       COMMON AS ,SLS, UBAR, OM , HO, HI, TVTT, Z                          MAN0044
      COMMON TAU,CCF,NK,PNK,RHOK,RHONK,ALPHA1,ACPTNK,CPTNK,                MAN0045
     1ACPSN,CPTK,ACPSNK,RHONK                                              MAN0046
      DIMENSION TTABLE(20),WS(100),TS(100),C(100),WP(100),TV(100),HP(100MAN0047
     1),CT(100),TTD(100), SMT(100)                                         MAN0048
```

FIGURE 8. SOURCE PROGRAM

```
 DIMENSION WV(100),QH(100)      ,CFM(100)                                MAN0049
 DIMENSIONAS(100),SLS(100),        UBAR(100),OM(100),HO(100),TVTT(10MAN0050
10),Z(100),HI(100)                                                      MAN0051
 COMMON CPSNK, AMBN, AMBNK, HFG, CPT, CI, ALPBAR, SMT2                  MAN0052
1,R,S,HR,HE,HH ,PI                                                      MAN0053
 DIMENSION SMT2(100)                                                    MAN0054
 COMMON CFM,  HC,EC,CPSN,CC,                                            MAN0055
1       A1,A2,PCD,PCPMC,PCPR,PN,WIDTH,      SUM21,                      MAN0056
2SUM22,SUM24,SUM26,SUMALP,TZ,TSTEAM,WPNK  ,WX,WY                        MAN0057
 COMMON DIH, DOH, AIH,A2H                                               MAN0058
1 ,   HLH, BHC, AH, PCH,UBARH, UBPH, HN, NH                             MAN0059
  COMMON SUMN, SUMAS, SUMLS, PR ,BIK    ,NITER                          MAN0060
 COMMON BIKTE, BIKTH, DOE, DIE, SE,VE, BAROM, PO, SH, VH                MAN0061
 COMMONHC1,HC2,CC1,CC2,PCR1,PCR2,PCE1,PCBH1,PCBH2,PCM1,PCM2,PMC1,       MAN0062
1PMC2,SSC1,SSC2,EC1,EC2,VPC1,VPC2,EEC1,EEC2,BHC1,BHC2,OC1,OC2,SCM1,MAN0063
2SCM2,TCO1,TCO2,TC1,TC2,HD,HBL,HPR,CAPF,AJ,XM,E,A3,A4,A5,A6,A7,A8, MAN0064
3HELP                                                                   MAN0065
3   ,PCE2,CAPI1,CAPI2,CIBC1,CIBC2      ,AP,CSUBP                        MAN0066
 COMMONRH,RF  ,CPBT                                                     MAN0067
 COMMON EBEL          ,XCR,RP                                           MAN0068
 DIMENSION EBEL(100,6)                                                  MAN0069
 COMMONDOR,DIR,BIKTR,SR,RSR,VR,TA,FF,HFE,HFR,HBH                        MAN0070
1 ,CFMWZ,CFMWV,HS,HV,FFHL,SUMA,SMAQ,QLN   ,AE,AR,ELE,RLR,ENE,RNR        MAN0071
2 ,XRP  ,UBARE,UBARR,RPN,SSF,SSFI                                       MAN0072
 DIMENSIONCFMWZ(100),HS(100),CFMWV(100)                                 MAN0073
1,FOUT(100),DHOUT(100)                                                  MAN0074
 COMMONXTB,ORITE                                                        MAN0075
 COMMONSITE,SITEI,SITE2,WAIT,WAIT1,WAIT2,ES,ES1,ES2,                    MAN0076
1EA,EA1,EA2                                                             MAN0077
 COMMON PO3,HS1,PMC,EEC,VPC,CIBC                                        MAN0078
 COMMONACID,TNACDY,CLORIN,CAUSTC,DEFOM                                  MAN0079
 COMMONACACID,FACID,WT,WTRAY,RESTM                                      MAN0080
1     , AT,FE,FH,FR,H2,PO1,PO22,PO2,PSTAI,RHOE,RHOR,RHOH,CHRIS          MAN0081
2,ROE                                                                   MAN0082
 COMMONTP,AIO,WCO,UTHE,ATHE,THEL,THEN,HT,CTHE1,CTHE2,                   MAN0083
1CTHE3,PCTHE1,PCTHE2,THEK,THES,THER,SMALLR,THERC,THEFT,CTHE4,VTHE       MAN0084
2   ,BOBH,FMOD,BOBDH,FOUT,DHOUT,FBOB1,FBOB2,FBOB3,FSTAR1,FSTAR2,        MAN0085
3FSTAR3 ,BOBAC,BOBFA                                                    MAN0086
 COMMON DEACST,DEA2,DEA1,DYEAR,DKGAL    ,RATEIN                         MAN0087
1,WPL,CSLTBP                                                            MAN0088
 COMMONVVEV,TRAYFL,WBS,TRAYWD,RESIDT,                                   MAN0089
1TSTH,FREBD,AMODU,ALEV,TWFA,SPL,BDEPH,                                  MAN0090
2CTA,HST  ,ESHELL,RSHFLL ,CSLTBH,SMAPPP,SMAPPH   ,SSF2                  MAN0091
 DIMENSIONVVEV(100),TRAYFL(100),WBS(100),                               MAN0092
1TRAYWD(100),RESIDT(100)                                                MAN0093
1,ALPHA(100)                                                            MAN0094
 COMMON PV,A,ORHT,DELP,DENBR ,COEFA                                     MAN0095
 DIMENSION PV(100),A(100),ORHT(100),DELP(100),DENBR(100)                MAN0096
 COMMON REASIZ,REACST,TOELEC,TURCST,CAPI3,RETUB2,RETUB1,THERM           MAN0097
 COMMON WPS,RS,WPIN,CBS,TBS,TOS,ANS,THS,WBE,WPE,E,IE, ALPHA             MAN0098
1,SUMWP                                                                 MAN0099
 COMMON CBE,RPE,TBE ,SSFI                                               MAN0100
 DIMENSION WPS(25),RS(25),WPIN(25),CBS(25),TBS(25),TOS(25),ANS(25),MAN0101
1THS(25)                                                                MAN0102
 DIMENSION PODEL(25),HREC(25),POREC(25),WOS(25),WFS(25),HSUB(25),       MAN0103
1 ELES(25),RLRS(25),WRS(25),HSIS(25)                                    MAN0104
2 ,AES(25)  ,VOLMS(25),ARS(25)                                          MAN0105
1,HLHS(25)                                                              MAN0106
 COMMON ARS,ELES,HREC,HSIS,HSUB,PODEL,POREC,RLRS,VOLMS,                 MAN0107
```

FIGURE 8 (Continued)

```
     1WFS,WOS,WRS,AMBDAS,POCST1,POCST2,SUMLE,SUMLR,SUMPOR,SUMWR,WTME,    MAN0108
     2WTMR ,AES                                                          MAN0109
     1,HLHS                                                              MAN0110
      COMMONTOE, HDEL, POBLD,VOLM,HMKUP,POMKUP,WZZ,POPRD,AMSC1,AMSC2,    MAN0111
     1CD,DEACS1,DEACS2,PMCFLO,PMCPO                                      MAN0112
      COMMON UDEAHP,UDEAWM,UINTAK,UNARAE,UNARAR,UNARHT,UNCHEM,           MAN0113
     1UNDRVE,UNELCT,UNMAIN,UNMSCL,UNOPR,UNPIPE,UNPUMP,                   MAN0114
     2UNSHHT,UNSITE,USHELN,VOLUME,WBLOW,WMAKUP,WPROD,WPUMP,WRECOV,WREJCTMAN0115
      DIMENSION PS(25),QS(25),TCFS(25)                                   MAN0120
      DIMENSION RHOKS(25),RHONKS(25),BAROMS(25),WCS(25),NKS(25),         MAN0121
     1ENES(25),NNKS(25),RNRS(25),UES(25),URS(25) ,WBSU(25)    ,UBARA(25) MAN0122
      COMMON RHOKS,RHONKS,PS,QS,RPS,TCFS,BAROMS,WCS,NKS                  MAN0116
      COMMON ENES,NNKS,RNRS,UES,URS  ,WBSU ,USHELV,APLANT,ATOT,UBARA     MAN0117
      COMMON DTPD,CL                                                     MAN0118
      COMMON TOTALR
      COMMON CTUBEE,CETSE,CTUBER,CETSR,CITSE,CITSR,CDITS,CDETS
      DIMENSIONCTUBEF(25),CETSE(25),CTUBER(25),CETSR(25),CITSE(25),CITSR40250001
     1(25)
      DIMENSION                SUMQ(25)     ,PDQ(25),SAVEWP(25)           MAN0119
C$******YORK TYPE DEMISTER
      COMMON UMAX, SUMDMA,  DTPDP, COSTDM
      COMMON UALP,DTPDPS
      COMMON AREADM,DPTDM,DTDM,CPROD,WIDDM
      DIMENSION AREADM(100),DPTDM(100),DTDM(100),CPROD(100),WIDDM(100)
     1,DTPDPS(100)  ,DTPDP(100),  SUMDMA(25)
      COMMON YDTPD
      DIMENSION YDTPD(8,100).
      COMMONDPREQ
      DIMENSION DPREQ(100)
 180  FORMAT(9E8.5/      9E8.5/9E8.5/   8E8.5/8E8.5/7E8.5)
      TPCT#0.005                                                         MAN0123
      NITER#25
C     IF ORITE IS NOT EQUAL TO 0  THE STAGE BY STAGE OUTPUT IS OMITTED
      ORITE#0.0
 210  FORMAT(I2,2F8.0       )                                            MAN0125
      READINPUTTAPE10,180,     G,              CR,TS(1),                 MAN0131
     1          TA,CO,CP,VR,VE,VH,                                       MAN0132
     2HD,HR,HE,HH,HBL,HPR,FFHL,SSFI,DOR,                                 MAN0133
     4DIR,DOE,DIE,DOH,DIH,RSR,RE,RH,SR,                                  MAN0134
     5 SE,SH,BIKTR,BIKTE,BIKTH,CAPF,ACACID,FACID,                        MAN0135
     6 SMALLE,SMALLD,SMALLB,       SMALLP,SMA1,SMA2,A3,A4    ,           MAN0136
     7,RATEIN,WPL,CSLTRP,CSLTBH            ,COEFA,        DTPD,CL        MAN0137
      READ INPUT TAPE 10,200,AMODU,ALEV,TSTH,FREBD,TWFA,SPL,BDEPH,HST    MAN0138
      A1#SMA1                                                            MAN0146
      A2#SMA2                                                            MAN0147
      SSF#1.0                                                            MAN0148
      XCR#CR                                                             MAN0149
      XU#U                                                               MAN0150
      XO#0                                                               MAN0151
      P   #0                                                             MAN0157
      TSTEAM#TS(1)                                                       MAN0158
      STEAMT#TSTEAM
1115  READINPUT TAPE 10,200,CASE,RPE,F,TBE,TOE,CDITS,CDETS,UMAX,UALP
 200  FORMAT (9F8.0)                                                     MAN0130
      WRITE OUTPUT TAPE 9 ,47,CASE,RPE,CR,O,U     ,TB                    MAN0142
     1,TOTAL,ROE                                                         MAN0143
  47  FORMAT(5HICASE F10.0,3X 2HRP F10.5, 3X 2HCR F10.5,3X 1HP F10.5,3X MAN0144
     1 1HQ  F10.5, 3X 2HTB F12.5,3X,1HN F5.0,3X3HROEF8.3)                MAN0145
      IGSC#0
```

FIGURE 8 (Continued)

```
      IE# E                                                             MAN0128
      READ INPUT TAPE 10,200,(THS(I),RS(I),ANS(I),I#1,IE)  ,TOTALR      MAN0129
      NTOTAL# ANS(IE) +0.01                                             MAN0140
      HP#HD
      H#HD
      XTO#TOE                                                           MAN0141
      IF(HR)1625,1625,1626                                              MAN0152
 1625 HR#ALEV*HST                                                       MAN0153
 1626 IF(HE)1627,1627,1361                                              MAN0154
 1627 HE#ALEV*HST                                                       MAN0155
 1361 Q   #U                                                            MAN0156
      TS(1)#STEAMT
      TSTEAM#STEAMT
      ERR#0.0                                                           MAN0159
      SUMWP#0.0                                                         MAN0160
    1 CBE#CR*CO                                                         MAN0161
      IE#E                                                              MAN0162
      WPE#G*0.344432                                                    MAN0163
      DO 11 J#1,IE
      NTOTAL#ANS(J)
      DO 11 KK#1,NTOTAL
   11 YDTPD(J,KK)#DTPD
    3 WBE#WPE*(CO-CP)/(CBE-CO)                                          MAN0164
      REWIND 7                                                          MAN0127
      REWIND 8
      SUMWP#0.0
      SPDQ#0.0                                                          MAN0165
      SUMQ(IE+1)#1.0                                                    MAN0166
      I#IE                                                              MAN0167
      DO 300 J#1,IE                                                     MAN0168
      IF(I-IE)302,301,302                                               MAN0169
  301 TBS(I)#TBE                                                        MAN0170
      TOS(I)#TO                                                         MAN0171
      SUMQ(I+1)#1.0                                                     MAN0172
      GO TO 303                                                         MAN0173
  302 TBS(I)#THS(I+1)                                                   MAN0174
      TOS(I)#TCFS(I+1)                                                  MAN0175
  303 PS(I)#(THS(I)-TBS(I))/1100.                                       MAN0176
      TCFS(I)#THS(I)-1000.0*PS(I)/(0.95*RS(I))                          MAN0177
      QS(I)#(1100.0*PS(I)-TCFS(I)+TBS(I))/(TBS(I)-TOS(I))               MAN0178
      SUMQ(I)#SUMQ(I+1)*QS(I)                                           MAN0179
      PDQ(I)#PS(I)/SUMQ(I)                                              MAN0180
      SPDQ#SPDQ+PDQ(I)                                                  MAN0181
      I#I-1                                                             MAN0182
  300 CONTINUE                                                          MAN0183
      I#IE                                                              MAN0184
      SUMWP#0.0                                                         MAN0185
      DO 100 J#1,IE                                                     MAN0186
      IF(I-IE)101,102,101                                               MAN0187
  102 WOS(I)#WPE/SPDQ                                                   MAN0188
      GO TO 304                                                         MAN0189
  101 WOS(I)#WRS(I+1)+WBE+WPE                                           MAN0190
  304 WRS(I)#WOS(I)/QS(I)-WBE-WPE                                       MAN0191
      WPS(I)#PS(I)*(WRS(I)+WBE+WPE)                                     MAN0192
      SUMWP#SUMWP+WPS(I)                                                MAN0193
      I#I-1                                                             MAN0194
  100 CONTINUE                                                          MAN0195
      DO 321 I#1,IE                                                     MAN0196
      IF(I-1)1103,1102,1103                                             MAN0197
```

FIGURE 8 (Continued)

```
 1102 WPIN(I)#0.0                                                       MAN0198
      GO TO 321                                                         MAN0199
 1103 WPIN(I)#WPIN(I-1)+WPS(I-1)                                        MAN0200
  321 CONTINUE                                                          MAN0201
  316 I#IE                                                              MAN0202
      WPIN(IE+1)#WPIN(IE)+WPS(IE)                                       MAN0203
      SPDQ#0.0                                                          MAN0204
  315 DO 120 J#1,IE                                                     MAN0205
      NTOTAL#ANS(I)
      DO 12 KK#1,NTOTAL
   12 DTPDP(KK)#YDTPD(I,KK)
      IF(IE-I)103,104,103                                               MAN0206
  104 CBS(I)#CBE                                                        MAN0207
      TBS(I)#TBE                                                        MAN0208
      TOS(I)#XTO                                                        MAN0209
      GOTO105                                                           MAN0210
  103 SUMWP#SUMWP-WPS(I+1)                                              MAN0211
      TOS(I)#TCFS(I+1)                                                  MAN0212
  105 CALL TCVAL (I)                                                    MAN0213
C     CALL OUTPUT                                                       MAN0214
      SAVEWP(I)#WPS(I)                                                  MAN0215
      PS(I)#0                                                           MAN0216
      QS(I)#U                                                           MAN0217
      TCFS(I)#TCF                                                       MAN0218
      SUMQ(I)#SUMQ(I+1)*QS(I)                                           MAN0219
      PDQ(I)#PS(I)/SUMQ(I)                                              MAN0220
      SPDQ#SPDQ+PDQ(I)                                                  MAN0221
      I#I-1                                                             MAN0222
  120 CONTINUE                                                          MAN0223
      SUMWP#0.0                                                         MAN0224
      I#IE                                                              MAN0225
      DO310 J#1,IE                                                      MAN0226
      IF(I-IE)311,312,311                                               MAN0227
  312 WOS(I)#WPE/SPDQ                                                   MAN0228
      GO TO 4                                                           MAN0229
  311 WOS(I)#WRS(I+1)+WBE+WPE                                           MAN0230
    4 WRS(I)#WOS(I)/QS(I)-WBE-WPE                                       MAN0231
      WPS(I)#PS(I)*(WRS(I)+WBE+WPE)                                     MAN0232
      SUMWP#SUMWP+WPS(I)                                                MAN0233
      I#I-1                                                             MAN0234
  310 CONTINUE                                                          MAN0235
      DO 1313 I#1,IE                                                    MAN0236
      IF(I-1)1311,1312,1311                                             MAN0237
 1312 WPIN(I)#0.0                                                       MAN0238
      GO TO 1313                                                        MAN0239
 1311 WPIN(I)#WPIN(I-1)+WPS(I-1)                                        MAN0240
 1313 CONTINUE                                                          MAN0241
      WPIN(IE+1)#WPIN(IE)+WPS(IE)                                       MAN0242
  201 FORMAT( 3E16.8/ (  7E16.8))                                       MAN0243
      DO 320 I#1,IE                                                     MAN0244
      IF(ABSF((WPS(I)-SAVEWP(I))/WPS(I))-0.0005)320,316,316             MAN0245
  320 CONTINUE                                                          MAN0246
      SUMPOR#0.0                                                        MAN0247
      I#IE                                                              MAN0248
      DO 221 J#1,IE                                                     MAN0249
      NTOTAL#ANS(I)
      DO 14 LD#1,NTOTAL
   14 DTPDP(LD)#YDTPD(I   ,LD)
      IF(IE-I)2103,2104,2103                                            MAN0250
```

FIGURE 8 (Continued)

```
2104 CBS(I)#CBE                                                        MAN0251
     TBS(I)#TBE                                                        MAN0252
     TOS(I)#XTO                                                        MAN0253
     GO TO 2105                                                        MAN0254
2103 SUMWP#SUMWP-WPS(I+1)                                              MAN0255
     TOS(I)#TCFS(I+1)                                                  MAN0256
2105 CALL TCVAL (I)                                                    MAN0257
     CALL STAGEG(I)
     IF(ERR)600,605,600
 605 CALL POWERU(I)                                                    MAN0259
     SAVEWP(I)#WPS(I)                                                  MAN0260
     TCFS(I)#TCF                                                       MAN0261
     KK#I                                                              MAN0262
     IF(UMAX)2,851,2
   2 IF(UALP)5,851,5
   5 IF(IGSC)851,6,851
   6 CALL DEMIST(I)
     WRITE        TAPE 8,     (IK,AREADM(IK),DPTDM(IK),DTDM(IK),
    1CPROD(IK),WIDDM(IK),IK#1,NTOTAL)
     DO 7 LD #1,NTOTAL
     YDTPD(I,LD)#DTPDP(LD)
     IF(I-1)7,7,15
  15 DTPDP(LD)#YDTPD(I-1,LD)
   7 CONTINUE
     GO TO 8
 851 CALL OUTPUT                                                       MAN0263
   8 I#I-1                                                             MAN0264
 221 CONTINUE                                                          MAN0265
     IF(IGSC)9,10,9
  10 IGSC#1
     GO TO 3
   9  CALL COST                                                        MAN0266
     KK#0                                                              MAN0267
     CALL OUTNEW                                                       MAN0268
 600 IF(JEAN)113,1115,113                                              MAN0269
 113 CALLEXIT                                                          MAN0270
     END                                                               MAN0271
```

FIGURE 8 (Continued)

```
*     LABEL                                                             TCV0001
      SUBROUTINE TCVAL(NMAIN)                                           TCV0002
      COMMON X,Y,W                                                      TCV0003
      COMMON DATANO                                                     TCV0004
      DIMENSIONX(150,4),Y(150)                                          TCV0005
      EQUIVALENCE(II,II)                                                TCV0006
      EQUIVALENCE        (Y(1),CR),       (Y(2),RP),       (Y(3),HC1),  TCV0007
     1(Y(4),CC1),        (Y(5),PCR1),     (Y(6),PCE1),     (Y(7),PCBH1), TCV0008
     2(Y(8),PCM1),       (Y(9),PMC1),     (Y(10),SITE1),   (Y(11),WAIT1), TCV0009
     3(Y(12),ES1),       (Y(13),EA1),     (Y(14),BHC1),    (Y(15),VPC1), TCV0010
     4(Y(16),EEC1),      (Y(17),OC1),     (Y(18),SCM1),    (Y(19),CIBC1), TCV0011
     5(Y(20),DEA1),      (Y(21),TC1)                                    TCV0012
      EQUIVALENCE        (Y(25),G),       (Y(26),TOTAL),   (Y(27),TSTEAM), TCV0013
     1(Y(28),THF),       (Y(29),TO),      (Y(30),TA),      (Y(31),CO),  TCV0014
     2(Y(32),CP),                         (Y(34),P),                    TCV0015
     3(Y(36),Q)                                                         TCV0016
      EQUIVALENCE        (Y(40),FFHL),    (Y(41),CAPF),    (Y(42),SMALLE), TCV0017
     1(Y(43),HD),        (Y(44),HR),      (Y(45),HE),      (Y(46),HH),  TCV0018
     2(Y(47),HBL),       (Y(48),HPR),     (Y(49),SMALLD),(Y(50),SMALLB), TCV0019
     3(Y(51),SMALLP),    (Y(52),SMAPPP),  (Y(53),SMAPPH),(Y(54),SMA1),  TCV0020
     4(Y(55),SMA2),      (Y(56),A3),      (Y(57),A4),      (Y(58),RATEIN), TCV0021
     5(Y(59),TP)                                                        TCV0022
      EQUIVALENCE        (Y(75),PN),      (Y(76),RPN),     (Y(77),ALPBAR), TCV0023
     1(Y(78),BARCM),     (Y(79),TB),      (Y(80),TCF),     (Y(81),AMBN), TCV0024
     2(Y(82),CSUBP),     (Y(83),ACPSN),   (Y(84),ACPTNK),(Y(85),UBPH),  TCV0025
     3(Y(86),PO),        (Y(87),WX),      (Y(88),WR),      (Y(89),WC),  TCV0026
     4(Y(90),WB),        (Y(91),WY)                                     TCV0027
      EQUIVALENCE        (Y(100),SH),     (Y(101),SF),     (Y(102),SR), TCV0028
     1(Y(103),BIKTH),    (Y(104),BIKTE),  (Y(105),BIKTR),(Y(106),VH),   TCV0029
     2(Y(107),VE),       (Y(108),VR),     (Y(109),DOH),    (Y(110),DOE), TCV0030
     3(Y(111),DOR),      (Y(112),DIH),    (Y(113),DIE),    (Y(114),DIR), TCV0031
     4(Y(115),RH),       (Y(116),RE),     (Y(117),RSR),    (Y(118),RHONK), TCV0032
     5(Y(119),RHOK),     (Y(120),WF),                      (Y(122),WO),  TCV0033
     6(Y(123),NK),       (Y(124),NNK),    (Y(125),UBARH),(Y(126),UBARE), TCV0034
     7(Y(127),UBARR),     (Y(128),AH),     (Y(129),AE),     (Y(130),AR), TCV0035
     8(Y(131),HLH),      (Y(132),ELE),    (Y(133),RLR),    (Y(134),HN), TCV0036
     9(Y(135),ENE),(Y(136),RNR),(Y(137),HBH),(Y(138),HFE),(Y(139),HFR) TCV0037
      COMMONNTOTAL,TS,THF,TO,CO,CP,CR,V,G,SMAPP,SMALLD,SMALLE,DO,DI,    TCV0038
     1H,SMALLB,SMALLP,SMA1,SMA2,P,Q,ERR,II,JJ,KK                        TCV0039
      COMMON HP,CT,C,OH,SMT,TTABLE,TTD,TV,WP,WS,WV                      TCV0040
      COMMON DELST,DELCT,CB,RHO,SUMQH,TB,TCF,TK,TOTAL,T,WB,WC,WF,WO,    TCV0041
     1WPN,WR,AMBDA                                                      TCV0042
       COMMON AS ,SLS, UBAR, OM , HO, HI, TVTT, Z                       TCV0043
      COMMON TAU,CCF,NK,PNK,RHOK,RHONK,ALPHA1,ACPTNK,CPTNK,             TCV0044
     1ACPSN,CPTK,ACPSNK,RHONK                                           TCV0045
      DIMENSION TTABLE(20),WS(100),TS(100),C(100),WP(100),TV(100),HP(100TCV0046
     1),CT(100),TTD(100), SMT(100)                                      TCV0047
      DIMENSION WV(100),QH(100)  ,CFM(100 )                             TCV0048
      DIMENSIONAS(100),SLS(100),        UBAR(100),OM(100),HO(100),      TCV0049
     1TVTT(100),Z(100),HI(100)                                          TCV0050
      COMMON CPSNK, AMBN, AMBNK, HFG, CPT, C1, ALPBAR, SMT2             TCV0051
     1,R,S,HR,HE,HH    ,PI                                              TCV0052
      DIMENSION SMT2(100)                                               TCV0053
      COMMON CFM,  HC,EC,CPSN,CC,                                       TCV0054
     1       A1,A2,PCD,PCPMC,PCPR,PN,WIDTH,      SUM21,                 TCV0055
     2SUM22,SUM24,SUM26,SUMALP,TC,TSTEAM,WPNK  ,WX,WY                   TCV0056
      COMMON DIH, DOH, A1H,A2H                                          TCV0057
     1 ,   HLH, BHC, AH, PCH,UBARH, UBPH, HN, NH                        TCV0058
       COMMON SUMN, SUMAS, SUMLS, PR ,BIK              ,NITER            TCV0059
```

FIGURE 8 (Continued)

```
 COMMON BIKTE, BIKTH, DOE, DIE, SE,VE, BAROM, PO, SH, VH                TCV0060
 COMMONHC1,HC2,CC1,CC2,PCR1,PCR2,PCE1,PCBH1,PCBH2,PCM1,PCM2,PMC1,       TCV0061
1PMC2,SSC1,SSC2,EC1,EC2,VPC1,VPC2,EEC1,EEC2,BHC1,BHC2,OC1,OC2,SCM1,TCV0062
2SCM2,TCO1,TCO2,TC1,TC2,HD,HBL,HPR,CAPF,AJ,XM,E,A3,A4,A5,A6,A7,A8,      TCV0063
3 A9,PCE2,CAPI1,CAPI2,CIBC1,CIBC2      ,AP,CSUBP                        TCV0064
 COMMONRH,RF   ,CPBT                                                    TCV0065
 COMMON EBEL          ,XCR,RP                                           TCV0066
 DIMENSION EBEL(100,6)                                                  TCV0067
 COMMONDOR,DIR,BIKTR,SR,RSR,VR,TA,FF,HFE,HFR,HBH                        TCV0068
1 ,CFMWZ,CFMWV,HS,HV,FFHL,SUMA,SMAQ,QLN   ,AE,AR,ELE,RLR,ENE,RNR        TCV0069
2 ,XRP  ,UBARE,UBARR,RPN,SSF,SSF1                                       TCV0070
 DIMENSIONCFMWZ(100),HS(100),CFMWV(100)                                 TCV0071
1,FOUT(100),DHOUT(100)                                                  TCV0072
 COMMONXTB,ORITE                                                        TCV0073
 COMMONSITE,SITE1,SITE2,WAIT,WAIT1,WAIT2,ES,ES1,ES2,                    TCV0074
1EA,EA1,EA2                                                             TCV0075
 COMMON PO3,HS1,PMC,EEC,VPC,CIBC                                        TCV0076
 COMMONACID,TNACDY,CLORIN,CAUSTC,DEFOM                                  TCV0077
 COMMONACACID,FACID,WT,WTRAY,RESTM                                      TCV0078
1     , AT,FE,FH,FR,H2,PO1,PO22,PO2,PSTAI,RHOE,RHOR,RHOH,CHRIS          TCV0079
2,ROE                                                                   TCV0080
 COMMONTP,AIO,WCO,UTHE,ATHE,THEL,THEN,THEHT,    CTHE1,CTHE2,             TCV0081
1CTHE3,PCTHE1,PCTHE2,THEK,THES,THER,SMALLR,THERC,THEFT,CTHE4,VTHE       TCV0082
2    ,BOBH,FMOD,BOBDH,FOUT,DHOUT,FBOB1,FBOB2,FBOB3,FSTAR1,FSTAR2,       TCV0083
3FSTAR3  ,BOBAC,BOBFA                                                   TCV0084
 COMMON DEACST,DEA2,DEA1,DYEAR,DKGAL    ,RATEIN ,WPL,CSLTBP             TCV0085
 COMMONVVEV,TRAYFL,WBS,TRAYWD,RESIDT,                                   TCV0086
1TSTH,FREBD,AMODU,ALEV,TWFA,SPL,BDEPH,                                  TCV0087
2CTA,HST   ,ESHELL,RSHELL ,CSLTBH,SMAPPP,SMAPPH   ,SSF2                 TCV0088
 DIMENSIONVVEV(100),TRAYFL(100),WBS(100),                               TCV0089
1TRAYWD(100),RESIDT(100)                                                TCV0090
1,ALPHA(100)                                                            TCV0091
 DIMENSION PV(100),A(100),ORHT(100),DELP(100),DENBR(100)                TCV0092
 COMMON PV,A,ORHT,DELP,DENBR ,COEFA                                     TCV0093
 COMMON REASIZ,REACST,TOELEC,TURCST,CAPI3,RETUB2,RETUB1,THERM           TCV0094
 COMMON WPS,RS,WPIN,CBS,TBS,TOS,ANS,THS,WBE,WPE,E,IE, ALPHA             TCV0095
1,SUMWP                                                                 TCV0096
 COMMON CBE,RPE,TBE ,SSF1                                               TCV0097
 DIMENSION WPS(25),RS(25),WPIN(25),CBS(25),TBS(25),TOS(25),ANS(25),TCV0098
1THS(25)                                                                TCV0099
 DIMENSION PODEL(25),HREC(25),POREC(25),WOS(25),WFS(25),HSUB(25),       TCV0100
1 ELES(25),RLRS(25),WRS(25),HSIS(25)                                    TCV0101
2 ,AES(25)   ,VOLMS(25),ARS(25)                                         TCV0102
1,HLHS(25)                                                              TCV0103
 COMMON ARS,ELES,HREC,HSIS,HSUB,PODEL,POREC,RLRS,VOLMS,                 TCV0104
1WFS,WOS,WRS,AMBDAS,POCST1,POCST2,SUMLE,SUMLR,SUMPOR,SUMWR,WTME,        TCV0105
2WTMR  ,AES                                                             TCV0106
1,HLHS                                                                  TCV0107
 COMMONTOE, HDEL, POBLD,VOLM,HMKUP,POMKUP,WZZ,POPRD,AMSC1,AMSC2,        TCV0108
1CD,DEACS1,DEACS2,PMCFLO,PMCPO                                          TCV0109
 COMMON UDEAHP,UDEAWM,UINTAK,UNARAE,UNARAR,UNARHT,UNCHEM,               TCV0110
1UNDRVE,UNELCT,UNMAIN,UNMSCL,UNOPR,UNPIPE,UNPUMP,                       TCV0111
2UNSHHT,UNSITE,USHELN,VOLUME,WBLOW,WMAKUP,WPROD,WPUMP,WRECOV,WREJCTTCV0112
 DIMENSION PS(25),QS(25),TCFS(25)                                       TCV0113
 DIMENSION RHOKS(25),RHONKS(25),BAROMS(25),WCS(25),NKS(25),             TCV0114
1ENES(25),NNKS(25),RNRS(25),UES(25),URS(25)  ,WBSU(25)    ,UBARA(25)    TCV0115
 COMMON RHOKS,RHONKS,PS,QS,RPS,TCFS,BAROMS,WCS,NKS                      TCV0116
 COMMON ENES,NNKS,RNRS,UES,URS   ,WBSU  ,USHELV,APLANT,ATOT,UBARA       TCV0117
 COMMON DTPD,CL                                                         TCV0118
```

FIGURE 8 (Continued)

```
      COMMON TOTALR
      COMMON CTUBEE,CETSE,CTUBER,CETSR,CITSE,CITSR,CDITS,CDETS
      DIMENSIONCTUBEE(25),CETSE(25),CTUBER(25),CETSR(25),CITSE(25),CITSR40250001
     1(25)
C$******YORK TYPE DEMISTER
      COMMON UMAX, SUMDMA,  DTPDP, COSTDM
      COMMON UALP,DTPDPS
      COMMON AREADM,DPTDM,DTDM,CPROD,WIDDM
      DIMENSION AREADM(100),DPTDM(100),DTDM(100),CPROD(100),WIDDM(100)
     1,DTPDPS(100)  ,DTPDP(100),  SUMDMA(25)
      FLAG#0.0                                                          TCV0119
      M#NMAIN                                                           TCV0120
      TOTAL #ANS(NMAIN)                                                 TCV0121
      NTOTAL#TOTAL+0.1                                                  TCV0139
      SUMWPN#SUMWP                                                      TCV0122
      THF#THS(NMAIN)                                                    TCV0123
      TB#TBS(NMAIN)                                                     TCV0124
      TO#TOS(NMAIN)                                                     TCV0125
      RP#R S(NMAIN)                                                     TCV0126
      WP#WPS(NMAIN)                                                     TCV0127
      WX#WP                                                             TCV0128
      CB#CBS(NMAIN)                                                     TCV0129
      XRP#RP                                                            TCV0130
      XTB#TB                                                            TCV0131
      IF(ERR)209,360,209                                                TCV0132
  360 TJEAN#1.0/(1.0+SSFI)                                              TCV0133
      TER5#1.0+SSFI                                                     TCV0134
      A9#0.0                                                            TCV0135
      TS#TSTEAM                                                         TCV0136
      ITER#0                                                            TCV0137
      I#1                                                               TCV0138
      DELCT#TS-TO                                                       TCV0140
      DELST#TS-THF                                                      TCV0141
      ALPHA1#2.0                                                        TCV0142
      ACPSN#1050.                                                       TCV0143
      ACPSNK#1050.                                                      TCV0144
      ACPTNK#1050.                                                      TCV0145
      CPBT#0.92                                                         TCV0146
      CPTK#0.96                                                         TCV0147
      CPTNK#0.90                                                        TCV0148
      AMBN#1000.0                                                       TCV0149
       ANWP#344.432*G                                                   TCV0150
      IF(XTB)1510, 309,1510                                             TCV0151
 1510 TB#XTB                                                            TCV0152
      P   #(THF-TB)/ACPSN                                               TCV0153
       WP#WX                                                            TCV0154
      PN#P                                                              TCV0155
      TSTA#TSTEAM-TA                                                    TCV0156
      TCF#THF-  1.0E+3*P   /(RP*CPBT      *(1.0+SSFI))                  TCV0157
      Q   #(AMBN*P   /CPTNK-TCF+TB)/                                    TCV0158
     1(CPTK*(TB-TO)/CPTNK)                                              TCV0159
      WF#WP/P                                                           TCV0160
      WO#Q   *WF                                                        TCV0161
      PNK#(TCF-TB)/ACPTNK                                               TCV0162
      TK#THF-PNK*ACPSNK                                                 TCV0163
      IF(XCR)1520,1521,1520                                             TCV0164
 1521 CR#(CP/CO-1.0/P   )/(1.0-1.0/P   )                                TCV0165
      CB#CR*CO                                                          TCV0166
      ITER#NITER+1                                                      TCV0167
```

FIGURE 8 (Continued)

```
      ERR#10.                                                           TCV0168
      GO TO 209                                                         TCV0169
 1520 WC#WO-SUMWPN*(CB-CP)/(CB-CO)                                      TCV0170
      IF(M-IE)711,710,711                                               TCV0171
710   CBS(M+1)#CO                                                       TCV0172
      CCN#CO                                                            TCV0173
711   CONTINUE                                                          TCV0174
      WB#(WO*(CBS(M+1)-CCN)-(WPIN(M)+WP)*(CBS(M+1)-CP))/(CBS(M+1)-CBS(M)TCV0175
     1)                                                                 TCV0176
      WC#WO-WB-(WPIN(M)+WP)                                             TCV0177
      WR#WF-WB-(WPIN(M)+WP)                                             TCV0178
      IF(FLAG)206,712,206                                               TCV0179
712   CONTINUE                                                          TCV0210
      CCF#((WF -WPIN(M+1)     )*CB+WP*CP)/(WF -WPIN(M))                 TCV0211
      RHON#RHO                                                          TCV0212
      IF(M-IE)821,300,821
  300 IF(TOTALR)821,821,301
  301 RHOK#(TK-TB)/TOTALR
      NNK#TOTALR
      NK#NTOTAL-NNK
      ZNK#NK
      RHONK#(THF-TK)/ZNK
      GO TO 823
821   TAU#(THF-TK)*TOTAL/(THF-TB)+1.
      NK#TAU                                                            TCV0214
      ZNK#NK                                                            TCV0215
      RHONK#(THF-TK)/ZNK                                                TCV0216
       DENN#NTOTAL-NK                                                   TCV0217
       RHOK#(TK-TB)/DENN                                                TCV0218
  823 ITER#ITER+1                                                       TCV0219
      TTD(I)#THF-TCF-(RHONK+ALPHA1  )                                   TCV0220
      IF(ITER-NITER)1204, 309, 309                                      TCV0221
 1204 SMAQ#WF*CPBT*(THF-TCF)*FFHL                                       TCV0222
      SUMNK# 0.0                                                        TCV0223
      SUMNNK #0.0                                                       TCV0224
      NK1#NK-1                                                          TCV0225
      DO3J#1,NK1                                                        TCV0226
    3 SUMNK#SUMNK+FLOATF(J)                                             TCV0227
      J#NTOTAL-NK -1                                                    TCV0228
      DO4K#1,J                                                          TCV0229
    4 SUMNNK#SUMNNK+FLOATF(K)                                           TCV0230
      SUMA#TOTAL*(THF-TA)-RHONK                                         TCV0231
     1*SUMNK-RHONK*SUMNNK      -(TOTAL-ZNK)*ZNK*RHONK                   TCV0232
      IF(M-1)42,42,341                                                  TCV0233
  341 TBS(M-1)#THF +1.0                                                 TCV0234
      I#M-1                                                             TCV0235
      CBS(I)#((WBE+WPE- WPIN(I+1)-WPS(I+1))                             TCV0236
     1                        *CBS(I+1)+WPS(I+1)*CP)/(WBE+WPE-WPIN(I+1)) TCV0237
      COUNT#0.0                                                         TCV0238
      II#2                                                              TCV0239
      CALL DINTPL(THF,CCF,HE1)                                          TCV0240
      CALL DINTPL(THF,CB,HE2)                                           TCV0241
      CALLDINTPL(THF,CBS(M-1),HE3)                                      TCV0242
   41 II# 2                                                             TCV0243
      THX#TBS(M-1)                                                      TCV0244
      CALL DINTPL(TBS(M-1),CBS(M-1),HE4)                                TCV0245
      CPBM#(HE4-HE3)/(TBS(M-1)- THF)                                    TCV0246
      TBS(NMAIN-1)#(WR*(HE1-HE2)-(WBE+WPE- WPIN(M)        )*(HE3-HE1 ))/ TCV0247
     1((WBE+WPE- WPIN(M)        )*CPBM)     +THF                        TCV0248
```

FIGURE 8 (Continued)

```
      COUNT#COUNT+1.                                                    TCV0249
      IF(COUNT-20.)350,309,309                                          TCV0250
  350 IF(ABSF(TBS(M-1)-THX)/THX - .0005)40,41,41                        TCV0251
   40 TV1#TBS(M-1)                                                      TCV0252
      COUNT#0.0                                                         TCV0254
   43 II# 4                                                             TCV0255
      TVX#TV1                                                           TCV0256
      CALL DINTPL( TV1,CBS(M-1),BPR)                                    TCV0257
      TV1#TBS(M-1)- BPR -DTPD                                           TCV0258
      IF(ABSF(TVX-TV1       )/ TV1      -0.0005) 42,43,43               TCV0259
   42 TV(1)#TV1                                                         TCV0260
   44 CALL GSC (NMAIN)                                                  TCV0261
      IZ#NTOTAL+1                                                       TCV0262
      IF(XTB)1530,1531,1530                                             TCV0263
 1530 RPN#PN*1.0E3/(CFBT*(THF-TCF))  *TJEAN                             TCV0264
      IF(ABSF(TS(NTOTAL+1)-TB)/TB-0.0001)1532,1510,1510                 TCV0265
 1532 IF(ABSF(TO-SMT(NTOTAL))/TO-0.0001)1533,1510,1510                  TCV0266
 1533 IF(ABSF(SMT(NK)-TS(IZ))/TS(IZ)-0.0001)1534,1510,1510              TCV0267
1534  CONTINUE                                                          TCV0268
C     CCN#(WR*CB+(WF-WR)*CO)/WF                                         TCV0269
48    FLAG#1.
      GO TO 1510                                                        TCV0271
 1531 GO TO 309                                                         TCV0272
  206 BITER#NITER                                                       TCV0274
C4200 FORMAT(3H0PN E16.8,3E16.8)                                        TCV0275
      CCN#(WR*CB+(WF-WR)*CO)/WF                                         TCV0275
  209 RETURN                                                            TCV0276
  309 A9#99.0                                                           TCV0277
      WRITE OUTPUT TAPE 9,310,NITER                                     TCV0278
  310 FORMAT(35H THIS CASE WILL NOT CONVERGE AFTER   I5,  11H ITERATIONSTCV0279
     1        17H*****************     )                                TCV0280
      ERR#10.                                                           TCV0281
      RETURN                                                            TCV0282
      END                                                               TCV0283
```

FIGURE 8 (Continued)

```
*     LABEL
C     SUBROUTINE OUTNEW                                                NEW0002
      SUBROUTINE OUTNEW                                                NEW0003
      COMMON X,Y,W                                                     NEW0004
      COMMON DATANO                                                    NEW0005
      DIMENSIONX(150,4),Y(150)                                         NEW0006
      EQUIVALENCE(II,II)                                               NEW0007
      EQUIVALENCE        (Y(1),CR),       (Y(2),RP),       (Y(3),HCI),  NEW0008
     1(Y(4),CCI),        (Y(5),PCRI),     (Y(6),PCEI),     (Y(7),PCBHI), NEW0009
     2(Y(8),PCMI),       (Y(9),PMCI),     (Y(10),SITEI),   (Y(11),WAITI), NEW0010
     3(Y(12),ESI),       (Y(13),EAI),     (Y(14),BHCI),    (Y(15),VPCI), NEW0011
     4(Y(16),EECI),      (Y(17),OCI),     (Y(18),SCMI),    (Y(19),CIBCI), NEW0012
     5(Y(20),DEAI),      (Y(21),TCI)                                   NEW0013
      EQUIVALENCE        (Y(25),G),       (Y(26),TOTAL),   (Y(27),TSTEAM), NEW0014
     1(Y(28),THF),       (Y(29),TO),      (Y(30),TA),      (Y(31),CO),  NEW0015
     2(Y(32),CP),                         (Y(34),P),                    NEW0016
     3(Y(36),Q)                                                         NEW0017
      EQUIVALENCE        (Y(40),FFHL),    (Y(41),CAPF),    (Y(42),SMALLE), NEW0018
     1(Y(43),HD),        (Y(44),HR),      (Y(45),HE),      (Y(46),HH),  NEW0019
     2(Y(47),HBL),       (Y(48),HPR),     (Y(49),SMALLD),(Y(50),SMALLB), NEW0020
     3(Y(51),SMALLP),    (Y(52),SMAPPP),  (Y(53),SMAPPH),(Y(54),SMA1),  NEW0021
     4(Y(55),SMA2),      (Y(56),A3),      (Y(57),A4),      (Y(58),RATEIN), NEW0022
     5(Y(59),TP)                                                        NEW0023
      EQUIVALENCE        (Y(75),PN),      (Y(76),RPN),     (Y(77),ALPBAR), NEW0024
     1(Y(78),BAROM),     (Y(79),TB),      (Y(80),TCF),     (Y(81),AMBN), NEW0025
     2(Y(82),CSUBP),     (Y(83),ACPSN),   (Y(84),ACPTNK),(Y(85),UBPH),  NEW0026
     3(Y(86),PO),        (Y(87),WX),      (Y(88),WP),      (Y(89),WC),  NEW0027
     4(Y(90),WB),        (Y(91),WY)                                    NEW0028
      EQUIVALENCE        (Y(100),SH),     (Y(101),SF),     (Y(102),SR), NEW0029
     1(Y(103),BIKTH),    (Y(104),BIKTE),  (Y(105),BIKTR),(Y(106),VH),  NEW0030
     2(Y(107),VE),       (Y(108),VR),     (Y(109),DOH),    (Y(110),DOE), NEW0031
     3(Y(111),DOR),      (Y(112),DIH),    (Y(113),DIE),    (Y(114),DIR), NEW0032
     4(Y(115),RH),       (Y(116),RE),     (Y(117),RSR),    (Y(118),RHONK), NEW0033
     5(Y(119),RHOK),     (Y(120),WF),                      (Y(122),WO),  NEW0034
     6(Y(123),NK),       (Y(124),NNK),    (Y(125),UBARH),(Y(126),UBARE), NEW0035
     7(Y(127),UBARR),     (Y(128),AH),     (Y(129),AE),     (Y(130),AR), NEW0036
     8(Y(131),HLH),      (Y(132),ELE),    (Y(133),PLR),    (Y(134),HN), NEW0037
     9(Y(135),ENE),(Y(136),RNR),(Y(137),HBH),(Y(138),HFE),(Y(139),HFR) NEW0038
      COMMONNTOTAL,TS,THF,TO,CO,CP,CR,V,G,SMAPP,SMALLD,SMALLE,DO,DI,    NEW0039
     1H,SMALLB,SMALLP,SMA1,SMA2,P,Q,EPR,II,JJ,KK                        NEW0040
      COMMON HP,CT,C,QH,SMT,TTABLE,TTD,TV,WP,WS,WV                      NEW0041
      COMMON DELST,DELCT,CB,RHO,SUMQH,TB,TCF,TK,TOTAL,T,WB,WC,WF,WO,    NEW0042
     1WPN,WR,AMBDA                                                      NEW0043
       COMMON AS ,SLS, UBAR, OM , HO, HI, TVTT, Z                       NEW0044
      COMMON TAU,CCF,NK,PNK,RHOK,RHONK,ALPHAI,ACPTNK,CPTNK,             NEW0045
     1ACPSN,CPTK,ACPSNK,RHONK                                           NEW0046
      DIMENSION TTABLE(20),WS(100),TS(100),C(100),WP(100),TV(100),HP(100NEW0047
     1),CT(100),TTD(100), SMT(100)                                      NEW0048
      DIMENSION WV(100),QH(100)  ,CFM(100 )                             NEW0049
      DIMENSIONAS(100),SLS(100),       UBAR(100),OM(100),HO(100),       NEW0050
     1TVTT(100),Z(100),HI(100)                                          NEW0051
      COMMON CPSNK, AMBN, AMBNK, HFG, CPT, CI, ALPBAR, SMT2             NEW0052
     1,R,S,HR,HE,HH    ,PI                                              NEW0053
      COMMON CFM,  HC,EC,CPSN,CC,                                       NEW0054
     1       A1,A2,PCD,PCPMC,PCPR,PN,WIDTH,      SUM21,                 NEW0055
     2SUM22,SUM24,SUM26,SUMALP,TC,TSTEAM,WPNK   ,WX,WY                  NEW0056
      DIMENSION SMT2(100)                                               NEW0057
      COMMON DIH, DOH, A1H,A2H                                          NEW0058
     1 ,   HLH, BHC, AH, PCH,UBARH, UBPH, HN, NH                        NEW0059
```

FIGURE 8 (Continued)

```
  COMMON SUMN, SUMAS, SUMLS, PR ,BIK                ,NITER                NEW0060
 COMMON BIKTE, BIKTH, DOE, DIE, SE,VE, BAROM, PO, SH, VH                  NEW0061
 COMMONHCI,HC2,CCI,CC2,PCRI,PCR2,PCEI,PCBHI,PCBH2,PCMI,PCM2,PMCI,         NEW0062
1PMC2,SSCI,SSC2,ECI,EC2,VPCI,VPC2,EECI,EEC2,BHCI,BHC2,OCI,OC2,SCMI,NEW0063
2SCM2,TCOI,TCO2,TCI,TC2,HD,HBL,HPR,CAPF,AJ,XM,E,A3,A4,A5,A6,A7,A8, NEW0064
3 A9,PCE2,CAPII,CAPI2,CIBCI,CIBC2      ,AP,CSUBP                          NEW0065
 COMMONRH,RE   ,CPBT                                                      NEW0066
 COMMON EBEL          ,XCR,RP                                             NEW0067
 DIMENSION EBEL(100,6)                                                    NEW0068
 COMMONDOR,DIR,BIKTR,SR,RSR,VR,TA,FF,HFE,HFR,HBH                          NEW0069
1 ,CFMWZ,CFMWV,HS,HV,FFHL,SUMA,SMAQ,QLN   ,AE,AR,ELE,RLR,ENE,RNR          NEW0070
2 ,XRP  ,UBARE,UBARR,RPN,SSF,SSFI                                         NEW0071
 DIMENSIONCFMWZ(100),HS(100),CFMWV(100)                                   NEW0072
1,FOUT(100),DHOUT(100)                                                    NEW0073
 COMMONXTB,ORITE                                                          NEW0074
 COMMONSITE,SITEI,SITE2,WAIT,WAITI,WAIT2,ES,ESI,ES2,                      NEW0075
1EA,EAI,EA2                                                               NEW0076
 COMMON PO3,HSI,PMC,EEC,VPC,CIBC                                          NEW0077
 COMMONACID,TNACDY,CLORIN,CAUSTC,DEFOM                                    NEW0078
 COMMONACACID,FACID,WT,WTRAY,RESTM                                        NEW0079
1     , AT,FE,FH,FR,H2,PO1,PO22,PO2,PSTAI,RHOE,RHOR,RHOH,CHRIS            NEW0080
2,ROE                                                                     NEW0081
 COMMONTP,AID,WCD,UTHE,ATHE,THEL,THEN,THEHT,    CTHEI,CTHE2,              NEW0082
1CTHE3,PCTHEI,PCTHE2,THEK,THES,THER,SMALLR,THERC,THEFT,CTHE4,VTHE         NEW0083
2    ,BOBH,FMOD,BOBDH,FOUT,DHOUT,FBOBI,FBOB2,FBOB3,FSTARI,FSTAR2,         NEW0084
3FSTAR3 ,BOBAC,BOBFA                                                      NEW0085
 COMMON DEACST,DEA2,DEAI,DYEAR,DKGAL    ,RATEIN                           NEW0086
1,WPL,CSLTBP                                                              NEW0087
 COMMONVVEV,TRAYFL,WBS,TRAYWD,RESIDT,                                     NEW0088
1TSTH,FREBD,AMODH,ALEV,TWFA,SPL,BDEPH,                                    NEW0089
2CTA,HST   ,ESHELL,RSHELL ,CSLTBH,SMAPPP,SMAPPH ,SSF2                     NEW0090
 DIMENSIONVVEV(100),TRAYFL(100),WBS(100),                                 NEW0091
1TRAYWD(100),RESIDT(100)                                                  NEW0092
1,ALPHA(100)                                                              NEW0093
 COMMON PV,A,ORHT,DELP,DENBR ,COEFA                                       NEW0094
 DIMENSION PV(100),A(100),ORHT(100),DELP(100),DENBR(100)                  NEW0095
 COMMON REASIZ,REACST,TOELEC,TURCST,CAPI3,RETUB2,RETUBI,THERM             NEW0096
 COMMON WPS,RS,WPIN,CBS,TBS,TOS,ANS,THS,WBE,WPE,E,IE, ALPHA               NEW0097
1,SUMWP                                                                   NEW0098
 COMMON CBE,RPE,TBE  ,SSFI                                                NEW0099
 DIMENSION WPS(25),RS(25),WPIN(25),CBS(25),TBS(25),TOS(25),ANS(25),NEW0100
1THS(25)                                                                  NEW0101
 DIMENSION PODEL(25),HREC(25),POREC(25),WOS(25),WFS(25),HSUB(25),         NEW0102
1 ELES(25),RLRS(25),WRS(25),HSIS(25)                                      NEW0103
2 ,AES(25)   ,VOLMS(25),ARS(25)                                           NEW0104
1,HLHS(25)                                                                NEW0105
 COMMON ARS,ELES,HREC,HSIS,HSUB,PODEL,POREC,RLRS,VOLMS,                   NEW0106
1WFS,WOS,WRS,AMBDAS,POCSTI,POCST2,SUMLE,SUMLR,SUMPOR,SUMWR,WTME,         NEW0107
2WTMR  ,AES                                                               NEW0108
1,HLHS                                                                    NEW0109
 COMMONTCE, HDEL, POBLD,VOLM,HMKUP,POMKUP,WZZ,POPRD,AMSCI,AMSC2,          NEW0110
1CD,DEACSI,DEACS2,PMCFLO,PMCPO                                            NEW0111
 COMMON UDEAHP,UDEAWM,UINTAK,UNARAE,UNARAR,UNARHT,UNCHEM,                 NEW0112
1UNDRVE,UNELCT,UNMAIN,UNMSCL,UNOPR,UNPIPE,UNPUMP,                         NEW0113
2UNSHHT,UNSITE,USHELN,VOLUME,WBLOW,WMAKUP,WPROD,WPUMP,WRECOV,WREJCTNEW0114
 DIMENSION PS(25),QS(25),TCFS(25)                                         NEW0115
 DIMENSION RHOKS(25),RHONKS(25),BAROMS(25),WCS(25),NKS(25),               NEW0116
1ENES(25),NNKS(25),RNRS(25),UES(25),URS(25)  ,WBSU(25)    ,UBARA(25) NEW0117
 COMMON RHOKS,RHONKS,PS,QS,RPS,TCFS,BAROMS,WCS,NKS                        NEW0118
```

FIGURE 8 (Continued)

```
      COMMON ENES,NNKS,RNRS,UES,URS   ,WBSU ,USHELV,APLANT,ATOT,UBARA     NEW0119
      COMMON DTPD,CL                                                     NEW0120
      COMMON TOTALR
      COMMON CTUBEE,CETSE,CTUBER,CETSR,CITSE,CITSR,CDITS,CDETS
      DIMENSIONCTUBEE(25),CETSE(25),CTUBER(25),CETSR(25),CITSE(25),CITSR40250001
     1(25)                                                               40250003
C$******YORK TYPE DEMISTER
      COMMON UMAX, SUMDMA,  DTPDP, COSTDM
      COMMON UALP,DTPDPS
      COMMON AREADM,DPTDM,DTDM,CPROD,WIDDM
      DIMENSION AREADM(100),DPTDM(100),DTDM(100),CPROD(100),WIDDM(100)
     1,DTPDPS(100)  ,DTPDP(100),  SUMDMA(25)
      WRITE OUTPUT TAPE 6,1,G, WPE, BDEPH, RPE, WRE, HST , SUMN , WY,    NEW0121
     1SSF2,  CO, AMODU, COEFA, CP, ALEV, VOLUME                          NEW0122
      TOE#TOS(IE)                                                        NEW0123
      WRITE OUTPUT TAPE 6,2, CR,TSTH, THERM, TSTEAM, FREBD, REASIZ, TOE,NEW0124
     1TOELEC,                                                            NEW0125
     1      TBE, SPL                                                     NEW0126
      WRITE OUTPUT TAPE 6,3,SH,DOH,AH, R H, DIH, HLH, BIKTH,WFS(I), HN   NEW0127
     1,VH,UBARH                                                          NEW0128
      DO 30 I#1,IE                                                       NEW0129
      IF(I-IE)260,261,260
  261 WRITE OUTPUT TAPE 6,4,I, SE,SR,  R S(I),RE, RSR, PS(I), VE, VR,    NEW0130
     1QS(I),BIKTE,BIKTR, THS(I), DOE, DOR,TCFS(I),DIE,DIR,TBS(I),        NEW0131
     2RHONKS(I), RHO KS(I), TOS(I)                                       NEW0132
      GO TO 262
  260 WRITE OUTPUT TAPE 6,4,I, SE,SE,  R S(I),RE, RE , PS(I), VE, VE,    NEW0130
     1QS(I),BIKTE,BIKTE, THS(I), DOE, DOE,TCFS(I),DIF,DIE,TBS(I),        NEW0131
     2RHONKS(I), RHO KS(I), TOS(I)                                       NEW0132
  262 WRITE OUTPUT TAPE 6, 5, WFS(I), WOS(I), WBSU(I), NKS(I), NNKS(I), NEW0133
     1 WPS(I),  UES(I), URS(I),  WRS(I), AES(I), ARS(I), WCS(I), ELFS(I)NEW0134
     2, RLRS(I), ENES(I), RNRS(I), BAROMS(I), UBARA (I)                  NEW0135
   30 CONTINUE                                                           NEW0136
    1 FORMAT(24H0PLANT PRODUCT RATE  GPD 1X E16.8, 3X24HPLANT PRODUCT RANEW0137
     1TE LB/HR 1X E16.8,3X  15HBRINE DEPTH  FT 1X E16.8/                 NEW0138
     224H PLANT PERFORMANCE RATIO 1X E16.8, 3X 25HPLANT BLOWDOWN FLOW LBNEW0139
     3/HR E16.8,3X  15HLEVEL HEIGHT FT  1X E16.8/                        NEW0140
     416H TOTAL NO STAGES 9X F16.0, 3X 16HSTEAM FLOW LB/HR 9X E16.8, 3X NEW0141
     517HTRAY WIDTH FACTOR E15.8/                                        NEW0142
     616H OCEAN SALT CONC  9X F16.5,3X 13HNO OF MODULES 12X F16.2, 3X   NEW0143
     718HSTAGE ORIFICE COEF  F14.3/                                      NEW0144
     818H PRODUCT SALT CONC  7X F16.5,  3X 17HNO OF TRAY LEVELS 8X F16.1NEW0145
     9,3X16HMODULE SHELL VOL  E16.8)                                     NEW0146
    2 FORMAT(16H SALT CONC RATIO 9X F16.3, 3X 23HTUBE SHEET THICKNESS INNEW0147
     12X F16.3, 3X 19HREACTOR THERMAL EFF  F13.5/                        NEW0148
     218H STEAM TEMPERATURE 7X  F16.2, 3X 22HVAPOR ESCAPE HEIGHT FT 3X  NEW0149
     3F16.3,3X  16HREACTOR SIZE M-W E16.8/ 11H OCEAN TEMP 14X F16.3, 44XNEW0150
     421HTOTAL MEGA WATTS ELEC  E14.6     /                              NEW0151
     514H BLOWDOWN TEMP 11X F16.2, 3X 22HSPLASH PLATE LENGTH IN 3X F16.4NEW0152
     6/1H )                                                              NEW0153
    3 FORMAT(13H BRINE HEATER  /16H0FLOODING FACTOR  9X F16.5, 3X       NEW0154
     116HTUBE OUTSIDE DIA 9X E16.5, 3X  14HCONDENSER AREA E17.8/        NEW0155
     215H FOULING FACTOR 10X F16.5, 3X 15HTUBE INSIDE DIA 10X F16.5, 3X NEW0156
     313HHEATER LENGTH  3X E16.8/24H TUBE METAL CONDUCTIVITY 1X F16.3,3XNEW0157
     415HTUBE FLOW LB/HR 10X E16.8,3X 18HNO CONDENSER TUBES E14.6/      NEW0158
     514H TUBE VELOCITY  11X F16.3, 3X 18HHEAT TRANSFER COEF E21.8)     NEW0159
    4 FORMAT(1H0/10H0EFFECT NO  I5/ 25X  19HEVAPORATOR RECOVERY  5X     NEW0160
     117HEVAPORATOR REJECT / 16H FLOODING FACTOR  9X 2F20.2,3X 17HPERFORNEW0161
     2MANCE RATIO  F15.5/ 15H FOULING FACTOR 10X 2F20.6,3X 16HRECOVERY RNEW0162
```

FIGURE 8 (Continued)

```
  3ATIC P  F16.6/14H TUBE VELOCITY 11X  2F20.3,3X 17HRATIO OF WO TO WNEW0163
  4F F15.6/25H TUBE METAL CONDUCTIVITY   2F20.2, 3X 25HMAX BRINE TEMPNEW0164
  5 SHELL SIDE  E16.8/22H TUBE OUTSIDE DIAMETER 3X 2F20.5,      3X    NEW0165
  624HMAX BRINE TEMP TUBE SIDE  E16.8/ 21H TUBE INSIDE DIAMETER  4X  NEW0166
  72F20.6, 3X  15HBLOWDOWN TEMP F  E16.8/ 20H TEMP DROP PER STAGE    NEW0167
  85X,2F20.5, 3X   14HCOOLANT TEMP F  F17.6)                          NEW0168
 5 FORMAT(17H TUBE FLOW  LB/HR 8X  2E20.8, 3X 19HBLOWDOWN FLOW LB/HR NEW0169
  13XE16.8/ 13H NO OF STAGES 12X 2I20, 3X 18HPRODUCT RATE LB/HR  8X, NEW0170
  2E16.8/ 19H HEAT TRANSFER COEF 6X 2E20.8,3X 18HRECYCLE FLOW LB/HR  NEW0171
  38X,E16.8/ 15H CONDENSER AREA 10X, 2E20.8,3X 17HRETURN FLOW LB/HR  NEW0172
  4 9X E16.8/ 12H TUBE LENGTH 13X 2E20.8, /                           NEW0173
  512H NO OF TUBES 13X  2E20.8, 3X 26HAVERAGE THERMAL FORCE           NEW0174
  6E16.8/ 65X                    3X 26HAVERAGE HEAT TRANSFER COEF     NEW0175
  7 E16.8)                                                            NEW0176
 6 FORMAT(16H0HEADS AND POWER / 16H PUMP EFFICIENCY 9X E16.8, 3X    /NEW0177
  114H DELIVERY HEAD 11X E16.8, 3X 11HREJECT HEAD 14X E 16.8,3X      NEW0178
  211HHEATER HEAD  5X E16.8/ 14H BLOWDOWN HEAD 11X E16.8, 3X         NEW0179
  312HPRODUCT HEAD  13X E16.8)                                        NEW0180
 7 FORMAT(25H EVAPORATOR HEAD                          E16.8)         NEW0181
 8 FORMAT(1H0 28X  8HHEAD(FT) 8X 16HPOWER MEGA-WATTS /                NEW0182
  114H DELIVERY PUMP 11X  2E20.8/ 13H MAKE-UP PUMP 12X 2E20.8/       NEW0183
  221H RECYCLE PUMP  EFFECT,I2, 2X 2E20.8/(21X I2,2X 2E20.8))        NEW0184
 9 FORMAT(14H BLOWDOWN PUMP 11X 2E20.8/ 13H PRODUCT PUMP 12X 2E20.8/ NEW0185
  110H DEAERATOR  35X E20.8/ 24H TOTAL PLANT REQUIREMENT  21X E20.8) NEW0186
10 FORMAT(1H0)1H0UNIT COSTS / 17H DEAERATOR  $/GPM 8X E16.8,3X       NEW0187
  122HPUMPS AND MOTORS $/GPM 3X E16.8, 3X21HELECTRICAL EQUIP $/KW    NEW0188
  2E11.5 / 12X 5H$/HP 3X E16.8,  20X 5H$/HP  3XE16.8/25H0VALVES AND PNEW0189
  3IPING  $/GPM  E16.8, 3X 19HWATER INTAKE  $/GPM 6X E16.8, 3X       NEW0190
  416HSITE WORK  $/GPM  E16.8/ 22H EVAPORATOR AREA $/FT2 3X E16.8, 3XNEW0191
  518HREJECT AREA  $/FT2 7X E16.8, 3X 18HHEATER AREA  $/FT2 E14.6/   NEW0192
  619H HEATER SHELL $/FT2 6X E16.8, 3X 27HEVAP AND REJECT SHELL $/FT3NEW0193
  7E14.6, 3X  18HMISC CAPITAL $/GPM E14.6/ 44X  18X 7H$/STAGE  E16.8/NEW0194
  818H CHEMICAL $/GPM-YR  7X  E16.8, 3X 16HOPERATING  $/GPM 1X E16.8,NEW0195
  930HMAINT. AND SUPPLIES $/YR-$-CAP  E10.4)                          NEW0196
   WRITE OUTPUT TAPE 6, 6,SMALLE,HD, HR, HH, HBL, HPR                 NEW0197
   WRITE OUTPUT TAPE 6, 7, HE                                         NEW0198
   WRITE OUTPUT TAPE 6, 8, HDEL, PODEL(1), HMKUP, POMKUP,(I,HREC(I), NEW0199
  1POREC(I), I#1,IE)                                                  NEW0200
   WRITE OUTPUT TAPE 6, 9, HBL, POBLD, HPR, POPRD, PO3, PC            NEW0201
   WRITE OUTPUT TAPE 6,10, UDEAWM, UNPUMP, UNELCT, UDEAHP,UNDRVE,     NEW0202
  1UNPIPE, UINTAK, UNSITE, UNARAE, UNARAR, UNARHT, UNSHHT,USHELV,    NEW0203
  2UNMSCL, USHELN, UNCHEM,  UNOPR, UNMAIN                             NEW0204
20 FORMAT(15H POWER  $1KW-HR  10X F16.8, 3X 12HHEAT  $/MBTU  13X     NEW0205
  1E16.8, 3X 20HANNUAL CAP CHG  1/YR  F12.4/ 25H EVAP AND REJECT RETUNEW0206
  2BING E16.8, 3X 19HHEATER RETUBING CHG  6X E16.8, 3X13HINTEREST RATNEW0207
  3E 3X F16.5/ 16H INDIRECT CHARGE  9X  E16.8, 3X 23HWATER PLANT LOADNEW0208
  4 FACTOR 2X F16.2, 3X 22HACID PLANT LOAD FACTOR F10.3/              NEW0209
  524H ACID PLANT CAP CHG 1/YR  1X F16.2)                             NEW0210
   WRITE OUTPUT TAPE 6, 20, SMALLD, SMALLB, SMALLP, SMAPPP, SMAPPH,  NEW0211
  1RATEIN, AJ, CAPF,  FACID, ACACID                                   NEW0212
21 FORMAT( 6H0COSTS / 1H0 30X  8H$-DIRECT 13X  6H$/YEAR 14X 6H$/KGAL/NEW0213
  117H PUMPS AND MOTORS   8X  3E20.8/  10H SITE WORK  15X 3E20.8/    NEW0214
  211H SEA INTAKE        14X  3E20.8/  17H EVAPORATOR SHELL 8X3E20.8/NEW0215
  316H EVAPORATOR AREA    9X  3E20.8/  13H BRINE HEATER    12X3E20.8/NEW0216
  418H VALVES AND PIPING  7X  3E20.8/  15H ELEC EQUIPMENT  10X3E20.8/NEW0217
  525H CRANES,BLDG,CONCRETE,ETC    3E20.8/10H DEAERATOR    15X3E20.8/NEW0218
  6 5H HEAT              40X  2E20.8/  9H CHEMICAL  16X   20X 2E20.8/NEW0219
  76H POWER              39X  2E20.8/ 10H OPERATING 35X       2E20.8/NEW0220
  825H MAINTENANCE AND SUPPLIES 20X 2E20.8/  6H0TOTAL  39X 2E20.8)   NEW0221
```

FIGURE 8 (Continued)

```
22 FORMAT(1H0 23X 21H$-DIRECT AND INDIRECT    7X  5H$/GPD 15X 6H$/YEARNEW0222
  114X  6H$/KGAL /                                                    NEW0223
  219H CAPITAL INVESTMENT      6X   2E20.8,  20X    E20.8/            NEW0224
  313H REACTOR COST           12X    E20.8/                          NEW0225
  421H TURBO GENERATOR COST    4X    E20.8/                          NEW0226
  514H RETUBING COST          11X     40X   2E20.8)                  NEW0227
   WRITE OUTPUT TAPE 6, 21,PMC,PMC2,PMC1, SITE, SITE2, SITE1, WAIT,  NEW0228
  1WAIT2, WAIT1, ES, ES2, ES1, EA, EA2, EA1, BHC, BHC2, BHC1, VPC,   NEW0229
  2VPC2,  VPC1, EEC, EEC2, EEC1, CIBC, CIBC2, CIBC1, DEACST, DEA2,   NEW0230
  3DEA1, HC2, HC1, CC2, CC1, POCST2, POCST1, OC2, OC1, AMSC2,        NEW0231
  4AMSC1,  TC2, TC1                                                  NEW0232
   WRITE OUT PUT TAPE 6, 22, CAPI1,CAPI2, CAPI3, REACST, TURCST,     NEW0233
  1RETUB2, RETUB1                                                    NEW0234
   KK#0                                                              NEW0235
   CALL OUTPUT                                                       NEW0236
   RETURN                                                            NEW0237
   END                                                               NEW0238
```

FIGURE 8 (Continued)

```
*     LABEL                                                             CST0001
C     MULTI-EFFECT MULTI-FLASH COSTS                                    CST0002
      SUBROUTINE COST                                                   CST0003
      GTV2F(TVZ)                                                        CST0004
     1      #2.1786818-0.70443622E-1*TVZ     +0.93941286E-3*TVZ     **2  CST0005
     2-0.53958083E-5 *TVZ     **3 +0.18139197E-7*TVZ     **4             CST0006
      SMALLFF(D,V)#(.0056+0.02436/(D*V)**0.32)*SSF                      CST0007
      FGADF(XD    )#    EXPF(0.0748067*LOGF(XD)+0.2138177*(LOGF(XD))**2) CST0008
      FLADF(XD    )#0.74391    /SQRTF(XD)                               CST0009
      COMMON X,Y,W                                                      CST0010
      COMMON DATANO                                                     CST0011
      DIMENSIONX(150,4),Y(150)                                          CST0012
      EQUIVALENCE(II,II)                                                CST0013
      EQUIVALENCE        (Y(1),CR),       (Y(2),RP),       (Y(3),HCI),  CST0014
     1(Y(4),CCI),        (Y(5),PCRI),     (Y(6),PCEI),     (Y(7),PCBHI), CST0015
     2(Y(8),PCMI),       (Y(9),PMCI),     (Y(10),SITEI),   (Y(11),WAITI), CST0016
     3(Y(12),ESI),       (Y(13),EAI),     (Y(14),BHCI),    (Y(15),VPCI), CST0017
     4(Y(16),EECI),      (Y(17),OCI),     (Y(18),SCMI),    (Y(19),CIBCI), CST0018
     5(Y(20),DEAI),      (Y(21),TCI)                                    CST0019
      EQUIVALENCE        (Y(25),G),       (Y(26),TOTAL),   (Y(27),TSTEAM), CST0020
     1(Y(28),THF),       (Y(29),TO),      (Y(30),TA),      (Y(31),CO),  CST0021
     2(Y(32),CP),                         (Y(34),P),                    CST0022
     3(Y(36),Q)                                                         CST0023
      EQUIVALENCE        (Y(40),FFHL),    (Y(41),CAPF),    (Y(42),SMALLE), CST0024
     1(Y(43),HD),        (Y(44),HR),      (Y(45),HE),      (Y(46),HH),  CST0025
     2(Y(47),HBL),       (Y(48),HPR),     (Y(49),SMALLD),  (Y(50),SMALLB), CST0026
     3(Y(51),SMALLP),    (Y(52),SMAPPP),  (Y(53),SMAPPH),  (Y(54),SMA1), CST0027
     4(Y(55),SMA2),      (Y(56),A3),      (Y(57),A4),      (Y(58),RATEIN), CST0028
     5(Y(59),TP)                                                        CST0029
      EQUIVALENCE        (Y(75),PN),      (Y(76),RPN),     (Y(77),ALPBAR), CST0030
     1(Y(78),BAROM),     (Y(79),TB),      (Y(80),TCF),     (Y(81),AMBN), CST0031
     2(Y(82),CSUBP),     (Y(83),ACPSN),   (Y(84),ACPTNK),  (Y(85),UBPH), CST0032
     3(Y(86),PO),        (Y(87),WX),      (Y(88),WR),      (Y(89),WC),  CST0033
     4(Y(90),WB),        (Y(91),WY)                                     CST0034
      EQUIVALENCE        (Y(100),SH),     (Y(101),SF),     (Y(102),SR), CST0035
     1(Y(103),BIKTH),    (Y(104),BIKTE),  (Y(105),BIKTR),  (Y(106),VH), CST0036
     2(Y(107),VE),       (Y(108),VR),     (Y(109),DOH),    (Y(110),DOE), CST0037
     3(Y(111),DOR),      (Y(112),DIH),    (Y(113),DIE),    (Y(114),DIR), CST0038
     4(Y(115),RH),       (Y(116),RE),     (Y(117),RSR),    (Y(118),RHONK), CST0039
     5(Y(119),RHOK),     (Y(120),WF),                      (Y(122),WO),  CST0040
     6(Y(123),NK),       (Y(124),NNK),    (Y(125),UBARH),  (Y(126),UBARE), CST0041
     7(Y(127),UBARR),     (Y(128),AH),     (Y(129),AE),     (Y(130),AR), CST0042
     8(Y(131),HLH),      (Y(132),ELE),    (Y(133),RLR),    (Y(134),HN),  CST0043
     9(Y(135),ENE),(Y(136),RNR),(Y(137),HBH),(Y(138),HFE),(Y(139),HFR)  CST0044
      COMMONNTOTAL,TS,THF,TO,CO,CP,CR,V,G,SMAPP,SMALLD,SMALLE,DO,DI,    CST0045
     1H,SMALLB,SMALLP,SMA1,SMA2,P,Q,ERR,II,JJ,KK                        CST0046
      COMMON HP,CT,C,QH,SMT,TTABLE,TTD,TV,WP,WS,WV                      CST0047
      COMMON DELST,DELCT,CB,RHO,SUMQH,TB,TCF,TK,TOTAL,T,WB,WC,WF,WO,    CST0048
     1WPN,WR,AMBDA                                                      CST0049
       COMMON AS ,SLS, UBAR, OM , HO, HI, TVTT, Z                       CST0050
      COMMON TAU,CCF,NK,PNK,RHOK,RHONK,ALPHA1,ACPTNK,CPTNK,             CST0051
     1ACPSN,CPTK,ACPSNK,RHONK                                           CST0052
      DIMENSION TTABLE(20),WS(100),TS(100),C(100),WP(100),TV(100),HP(100CST0053
     1),CT(100),TTD(100), SMT(100)                                      CST0054
      DIMENSION WV(100),QH(100)  ,CFM(100 )                             CST0055
      DIMENSIONAS(100),SLS(100),       UBAR(100),OM(100),HO(100),       CST0056
     1TVTT(100),Z(100),HI(100)                                          CST0057
      COMMON CPSNK, AMBN, AMBNK, HFG, CPT, CI, ALPBAR, SMT2             CST0058
     1,R,S,HR,HE,HH    ,PI                                              CST0059
```

FIGURE 8 (Continued)

```
 DIMENSION SMT2(100)                                                    CST0060
 COMMON CFM,  HC,EC,CPSN,CC,                                            CST0061
1       A1,A2,PCD,PCPMC,PCPR,PN,WIDTH,      SUM21,                     CST0062
2SUM22,SUM24,SUM26,SUMALP,TC,TSTEAM,WPNK   ,WX,WY                      CST0063
 COMMON DIH, DOH, AIH,A2H                                               CST0064
1 ,   HLH, BHC, AH, PCH,UBARH, UBPH, HN, NH                             CST0065
  COMMON SUMN, SUMAS, SUMLS, PR ,BIK                ,NITER              CST0066
 COMMON BIKTE, BIKTH, DOE, DIE, SE,VE, BAROM, PO, SH, VH                CST0067
 COMMONHC1,HC2,CC1,CC2,PCR1,PCR2,PCE1,PCBH1,PCBH2,PCM1,PCM2,PMC1,       CST0068
1PMC2,SSC1,SSC2,TC1,EC2,VPC1,VPC2,EEC1,EEC2,BHC1,BHC2,OC1,OC2,SCM1,CST0069
2SCM2,TCO1,TCO2,TC1,TC2,HD,HBL,HPR,CAPF,AJ,XM,E,A3,A4,A5,A6,A7,A8,      CST0070
3 A9,PCE2,CAPI1,CAPI2,CIBC1,CIBC2      ,AP,CSUBP                        CST0071
 COMMONRH,RE   ,CPBT                                                    CST0072
 COMMON EBEL          ,XCR,RP                                           CST0073
 DIMENSION EBEL(100,6)                                                  CST0074
 COMMONDOR,DIR,BIKTR,SR,RSR,VR,TA,FF,HFE,HFR,HBH                        CST0075
1 ,CFMWZ,CFMWV,HS,HV,FFHL,SUMA,SMAQ,QLN   ,AE,AR,ELE,RLR,ENE,RNR        CST0076
2 ,XRP  ,UBARE,UBARR,RPN,SSF,SSF1                                       CST0077
 DIMENSIONCFMWZ(100),HS(100),CFMWV(100)                                 CST0078
1,FOUT(100),DHOUT(100)                                                  CST0079
 COMMONXTB,ORITE                                                        CST0080
 COMMONSITE,SITE1,SITE2,WAIT,WAIT1,WAIT2,ES,ES1,ES2,                    CST0081
1EA,EA1,EA2                                                             CST0082
 COMMON PO3,HS1,PMC,EEC,VPC,CIBC                                        CST0083
 COMMONACID,TNACDY,CLORIN,CAUSTC,DEFOM                                  CST0084
 COMMONACACID,FACID,WT,WTRAY,RESTM                                      CST0085
1     , AT,FE,FH,FR,H2,PO1,PO22,PO2,PSTA1,RHOE,RHOR,RHOH,CHRIS          CST0086
2,ROE                                                                   CST0087
 COMMONTP,AIO,WCO,UTHE,ATHE,THEL,THEN,THEHT,    CTHE1,CTHE2,            CST0088
1CTHE3,PCTHE1,PCTHE2,THEK,THES,THER,SMALLR,THERC,THEFT,CTHE4,VTHE       CST0089
2    ,BOBH,FMOD,BOBDH,FOUT,DHOUT,FBOB1,FBOB2,FBOB3,FSTAR1,FSTAR2,       CST0090
3FSTAR3 ,BOBAC,BOBFA                                                    CST0091
 COMMON DEACST,DEA2,DEA1,DYEAR,DKGAL    ,RATEIN ,WPL,CSLTBP             CST0092
 COMMONVVEV,TRAYFL,WBS,TRAYWD,RESIDT,                                   CST0093
1TSTH,FREBD,AMODU,ALEV,TWFA,SPL,BDEPH,                                  CST0094
2CTA,HST   ,ESHELL,RSHELL ,CSLTBH,SMAPPP,SMAPPH   ,SSF2                 CST0095
 DIMENSIONVVEV(100),TRAYFL(100),WBS(100),                               CST0096
1TRAYWD(100),RESIDT(100)                                                CST0097
1,ALPHA(100)                                                            CST0098
 DIMENSION PV(100),A(100),ORHT(100),DELP(100),DENBR(100)                CST0099
 COMMON PV,A,ORHT,DELP,DENBR ,COEFA                                     CST0100
 COMMON REASIZ,REACST,TOELEC,TURCST,CAPI3,RETUB2,RETUB1,THERM           CST0101
 COMMON WPS,RS,WPIN,CBS,TBS,TOS,ANS,THS,WBE,WPE,E,IE, ALPHA             CST0102
1,SUMWP                                                                 CST0103
 COMMON CBE,RPE,TBE ,SSF1                                               CST0104
 DIMENSION WPS(25),RS(25),WPIN(25),CBS(25),TBS(25),TOS(25),ANS(25),CST0105
1THS(25)                                                                CST0106
 DIMENSION PODEL(25),HREC(25),POREC(25),WOS(25),WFS(25),HSUB(25),       CST0107
1 ELES(25),RLRS(25),WRS(25),HSIS(25)                                    CST0108
2 ,AES(25)   ,VOLMS(25),ARS(25)                                         CST0109
1,HLHS(25)                                                              CST0110
 COMMON ARS,ELES,HREC,HSIS,HSUB,PODEL,POREC,RLRS,VOLMS,                 CST0111
1WFS,WOS,WRS,AMBDAS,POCST1,POCST2,SUMLE,SUMLR,SUMPOR,SUMWR,WTME,        CST0112
2WTMR ,AES                                                              CST0113
1,HLHS                                                                  CST0114
 COMMONTOE, HDEL, POBLD,VOLM,HMKUP,POMKUP,WZZ,POPRD,AMSC1,AMSC2,        CST0115
1CD,DEACS1,DEACS2,PMCFLO,PMCPO                                          CST0116
 COMMON UDEAHP,UDEAWM,UINTAK,UNARAE,UNARAR,UNARHT,UNCHEM,               CST0117
1UNDRVE,UNELCT,UNMAIN,UNMSCL,UNOPR,UNPIPE,UNPUMP,                       CST0118
```

FIGURE 8 (Continued)

```
     2UNSHHT,UNSITE,USHELN,VOLUME,WBLOW,WMAKUP,WPROD,WPUMP,WRECOV,WREJCTCST0119
      DIMENSION PS(25),QS(25),TCFS(25)                                  CST0120
      DIMENSION RHOKS(25),RHONKS(25),BAROMS(25),WCS(25),NKS(25),        CST0121
     1ENES(25),NNKS(25),RNRS(25),UES(25),URS(25)  ,WBSU(25)   ,UBARA(25) CST0122
      COMMON RHOKS,RHONKS,PS,QS,RPS,TCFS,BAROMS,WCS,NKS                 CST0123
      COMMON ENES,NNKS,RNRS,UES,URS   ,WBSU  ,USHELV,APLANT,ATOT,UBARA  CST0124
      COMMON DTPD,CL                                                    CST0125
      COMMON TOTALR
      COMMON CTUBEE,CETSE,CTUBER,CETSR,CITSE,CITSR,CDITS,CDETS
      DIMENSIONCTUBEE(25),CETSE(25),CTUBER(25),CETSR(25),CITSE(25),CITSR40250001
     1(25)
C$******YORK TYPE DEMISTER
      COMMON UMAX, SUMDMA,  DTPDP, COSTDM
      COMMON UALP,DTPDPS
      COMMON AREADM,DPTDM,DTDM,CPROD,WIDDM
      DIMENSION AREADM(100),DPTDM(100),DTDM(100),CPROD(100),WIDDM(100)
     1,DTPDPS(100)  ,DTPDP(100),  SUMDMA(25)
      NN#NTOTAL                                                         CST0126
      NNK#NN-NK                                                         CST0127
      COSTDM#0.
      DO500J#1,IE
500   COSTDM#SUMDMA(J)*10.5*ALEV*AMODU*.333/.25+COSTDM
C     DELIVERY PUMPS                                                    CST0128
C                                                                       CST0129
      I#IE                                                              CST0130
      HDEL#HD+HR+6.0*SMALLFF(DIR,VR)* RLRS(I)*VR**2/(DIR*32.174)        CST0131
      PODEL   #3.7676768E-10 *HDEL   *WOS(I)/SMALLE                     CST0132
C                                                                       CST0133
      SUMLR#0.0                                                         CST0134
      SUMLE#0.0                                                         CST0135
      DO300J#1,IE
      SUMLE#SUMLE+ELES(J)
      HSUB(J)#HE
300   CONTINUE
      IE1#IE-1
      DO301J#1,IE1
      SUMLR#SUMLR+RLRS(J)
301   CONTINUE
      SUMPOR#0.0                                                        CST0142
       DO 123 M#1,IE                                                    CST0143
      IF(M-1)121,121,122                                                CST0144
  122 HREC(M)#HSUB(M)+6.0*SMALLFF(DIE,VE)*(ELES(M)+RLRS(M-1))*VE**2/ (  CST0145
     1DIE*32.174)       +HS1 S(M)                                      CST0146
      POREC(M)#3.7676768E-10* HREC(M)* WRS(M)/SMALLE                    CST0147
      GO TO123                                                          CST0148
  121 HREC(1)#HSUB(1)+HH+HSIS(1)+ 6.0*SMALLFF(DIE,VE)*ELES(1)*VE**2/    CST0149
     1(DIE*32.174) +6.0*SMALLFF(DIH,VH)*HLH        *VH**2/(DIH   *32.174)CST015
      POREC(1)#3.7676768E-10*HREC(1)*(WFS(1)-WBE-WPE)/SMALLE
  123 SUMPOR# SUM POR+POREC(M)                                          CST0152
C     MAKE-UP PUMP                                                      CST0153
C                                                                       CST0154
C     BLOWDOWN PUMP                                                     CST0155
      IF(IE-1)400,401,400                                               CST0156
  401 HMKUP#0.0                                                         CST0157
      POMKUP#0.0                                                        CST0158
      GOTO402                                                           CST0159
  400 HMKUP#HSUB(IE)+6.0*SMALLFF(DIE,VE)*(SUMLE+SUMLR)*VE**2/(DIE*32.174CST0160
     1)+HSIS(1)+HH+6.*SMALLFF(DIH,VH)*HLH*VH**2/(DIH*32.174)
      POMKUP#3.7676768E-10*HMKUP*(WPE    +WBE)/SMALLE                   CST0162
```

FIGURE 8 (Continued)

```
C                                                                       CST0163
C     RECYCLE PUMPS                                                     CST0164
C                                                                       CST0165
  402 POBLD# 3.7676768E-10* HBL*WBE/SMALLE                              CST0166
C                                                                       CST0167
C     PRODUCT PUMP                                                      CST0168
C                                                                       CST0169
      SME3# 3.7676768E-10/SMALLE                                        CST0170
      POPRD# SME3*HPR* WPE                                              CST0171
C     HEADS AND POWER                                                   CST0172
C                                                                       CST0173
C     DEAERATOR                                                         CST0174
      PO3#(WPE+WBE)*EXPF(0.0137*TBE-6.121)/ 0.34667E+6                  CST0175
C     TOTAL POWER                                                       CST0176
      PO# PODEL+POMKUP+SUMPOR +POBLD +POPRD +PO3                        CST0177
C     COSTS                                                             CST0178
C     POWER                                                             CST0179
C                                                                       CST0180
C     PUMPS AND MOTORS                                                  CST0181
      WPEWBE#WPE+WBE                                                    CST0182
      WMAKUP#(WPE WBE)/480.0                                            CST0183
      SUMCER#0.0
      SUMWF#0.0                                                         CST0184
      SUMWR#0.0                                                         CST0185
      VOLUME#0.0                                                        CST0186
      SUMAE#0.00                                                        CST0187
      SUMAR#0.00                                                        CST0188
      SUMN #0.00                                                        CST0189
      DO 101 I#1,IE                                                     CST0190
      VOLUME#VOLMS(I)+VOLUME                                            CST0191
      SUMAE#SUMAE+AES(I)                                                CST0192
      SUMN#SUMN+ANS(I)                                                  CST0193
      SUMCER#SUMCER+CITSE(I)+CITSR(I)+CETSE(I)+CETSR(I)
      SUMAR#SUMAR+ARS(I)                                                CST0194
      SUMWR#SUMWR+WRS(I)                                                CST0195
      SUMWF#SUMWF+WFS(I)                                                CST0196
  101 CONTINUE                                                          CST0197
      H2#HH+HS1                                                         CST0198
      FG#CAPF*G                                                         CST0199
      GE#G*SMALLE                                                       CST0200
      WRECOV# SUMWF/(E*480.0)                                           CST0201
      WBLOW#WBE/480.                                                    CST0202
      WPROD#WPE/480.0                                                   CST0203
      WREJCT#WOS(IE)/480.                                               CST0204
      IF(M-1)451,450,451                                                CST0205
  450 WPUMP#(WOS(1)+WBE+WPE+WFS(1))/480.                                CST0205
      GO TO 452                                                         CST0205
  451 WPUMP#(WOS(IE)+2.0* WPEWBE + SUMWR   -WRS(1)+WFS(1))/480.         CST0205
  452 UDEAWM#0.0                                                        CST0205
      UDEAWM#0.0                                                        CST0206
      APLANT#SUMAE+SUMAR                                                CST0207
      ATOT#APLANT+AH                                                    CST0208
      UDEAHP#0.0                                                        CST0209
      UNPUMP#0.0                                                        CST0210
      UNDRVE#0.0                                                        CST0211
      UNELCT#0.0                                                        CST0212
      UNPIPE#0.0                                                        CST0213
      UINTAK#0.0                                                        CST0214
      UNSITE#0.0                                                        CST0215
```

FIGURE 8 (Continued)

```
      UNMAIN#0.0                                                        CST0216
      UNARAE#0.0                                                        CST0217
      UNOPR#0.0                                                         CST0218
      UNARAR#0.0                                                        CST0219
      UNCHEM#0.0                                                        CST0220
      UNARHT#0.0                                                        CST0221
      UNMSCL#0.0                                                        CST0222
      UNSHHT#0.0                                                        CST0223
      USHELN#0.0                                                        CST0224
      USHELV#0.0                                                        CST0225
      FG#G*CAPF                                                         CST0226
      IF(UNCHEM)2,1,2                                                   CST0227
    1 TNACDY#15.68*CO*(CR/(CR-1.0))*G*1.0E-6                            CST0228
      IF(G*1.0E-6-25.0)102,102,103                                      CST0229
  103 ACID#10000.0+32000.0*ACACID*TNACDY**0.686+12000.0*TNACDY**0.3     CST0230
     1+8.39*TNACDY*365.0*FACID                                          CST0231
      GOTO 104                                                          CST0232
  102 ACID#9125.0*FACID*TNACDY                                          CST0233
  104 CLORIN#363.5E-6*(0.25*WOS(IE)+WPE)*CAPF                           CST0234
      CAUSTC#146.117E-6* FG* (CR/(CR-1.0))                              CST0235
      DEFOM#608.82E-6*FG *CR/(CR-1.0)                                   CST0236
      CC2#ACID+CLORIN+CAUSTC+DEFOM                                      CST0237
      UNCHEM#CC2/WMAKUP                                                 CST0238
    2 IF(UDEAWM)4,3,4                                                   CST0239
    3 DEACS1#0.024518995*WPEWBE/TBE**0.26                               CST0240
      UDEAWM#DEACS1/WMAKUP                                              CST0241
    4 IF(UDEAHP)6,5,6                                                   CST0242
    5 DEACS2#16150.0*PO3                                                CST0243
      UDEAHP#DEACS2/(1340.4826*PO3)                                     CST0244
    6 IF(UNPUMP)8,7,8                                                   CST0245
    7 TERM2#0.0                                                         CST0246
      TERM3#0.0                                                         CST0247
      IF(IE-1)403,404,403                                               CST0248
  403 DO307J#2,IE                                                       CST0249
      TERM2#(0.9+0.00175*HREC(J))*WRS(J)/480. +TERM2                    CST0250
  307 CONTINUE                                                          CST0251
      TERM3#(0.54+0.00175*HMKUP)*(WBE+WPE)                              CST0252
     1/480.0                                                            CST0253
  404 PMCFLO#(0.54+00.00175*HDEL)*WREJCT + TERM2 +(0.9+0.00175*HREC(1)) CST0254
     1*WFS(1)/480.0 + (0.63+ 0.00175*HBL)*WBLOW +(0.6+0.00175*HPR)*WPRODCST0255
     2+TERM3                                                            CST0256
      UNPUMP#PMCFLO/WPUMP                                               CST0257
    8 IF(UNDRVE)10,9,10                                                 CST0258
    9 PMCPO#1340.4826*(20.57*(PODEL+POMKUP+POBLD+POPRD)+20.98* SUMPOR)  CST0259
      UNDRVE#PMCPO/(1340.4826*(PO-PO3))                                 CST0260
   10 IF(UNELCT)12,11,12                                                CST0261
C  11 EEC#10308.311*PO                                                  CST0262
C     UNELCT#EEC/(1000.0*PO)                                            CST0263
   11 UNELCT#10.3                                                       CST0263
   12 IF(UNPIPE)14,13,14                                                CST0264
   13 VPC#236.0*(WRECOV*480.0)**0.5                                     CST0265
      UNPIPE#VPC/WRECOV                                                 CST0266
   14 IF(UINTAK)16,15,16                                                CST0267
   15 WAIT#0.5*WREJCT                                                   CST0268
      UINTAK#WAIT/WREJCT                                                CST0269
   16 IF(UNSITE)18,17,18                                                CST0270
   17 SITE#1.0E3*WREJCT**0.6                                            CST0271
      UNSITE#SITE/WREJCT                                                CST0272
   18 IF(DOE-.5)181,131,182                                             CST0273
```

FIGURE 8 (Continued)

```
  181 FDOE#FLADF(DOE)                                                   CST0274
      GOTO185                                                           CST0275
  182 FDOE#FGADF(DOE)                                                   CST0276
  185 IF(DOR-.5)183,183,184                                             CST0277
  183 FDOR#FLADF(DOR)                                                   CST0278
      GOTO186                                                           CST0279
  184 FDOR#FGADF(DOR)                                                   CST0280
  186 IF(DOH-0.5)187,187,188                                            CST0281
  187 FDOH#FLADF(DOH)                                                   CST0282
      GOTO189                                                           CST0283
  188 FDOH#FGADF(DOH)                                                   CST0284
  189 IF(UNARAE)192,191,192                                             CST0286
191   UNARAE#SMA1
  192 IF(UNARAR)194,193,194                                             CST0288
193   UNARAR#SMA2
  194 IF(UNARHT)24,196,24                                               CST0290
  196 UNARHT#A3
   24 IF(UNSHHT)26,25,26                                                CST0299
   25 UNSHHT#A4                                                         CST0300
   26 IF(USHELV)28,27,28                                                CST0301
   27 USHELV#1.474-0.0185*ALEV                                          CST0302
   28 IF(USHELN)30,29,30                                                CST0303
   29 USHELN#0.0                                                        CST0304
      USHELN#SUMCER/SUMN                                                40250025
   30 IF(UNMSCL)32,31,32                                                CST0305
   31 UNMSCL#(1.0E6+0.0063*G)/WPROD                                     CST0306
   32 IF(UNOPR)34,33,34                                                 CST0307
   33 UNOPR#(0.13E+6*(G*1.0E-6)**0.267)/WPROD                           CST0308
   34 IF(UNMAIN)36,35,36                                                CST0309
   35 UNMAIN#0.0017                                                     CST0310
   36 AJ#0.0                                                            CST0311
      CC2#0.0                                                           CST0312
      DEACST#0.0                                                        CST0313
      PMC#0.0                                                           CST0314
      EEC#0.0                                                           CST0315
      VPC#0.0                                                           CST0316
      WAIT#0.0                                                          CST0317
      SITE#0.0                                                          CST0318
      EA#0.0                                                            CST0319
      BHC#0.0                                                           CST0320
      ES#0.0                                                            CST0321
      CIBC#0.0                                                          CST0322
      OC2#0.0                                                           CST0323
      AMSC2#0.0                                                         CST0324
   37 IF(CC2)39,38,39                                                   CST0325
   38 CC2#UNCHEM*WMAKUP                                                 CST0326
   39 IF(DEACST)41,40,41                                                CST0327
   40 DEACST#UDEAWM*WMAKUP+UDEAHP*1340.4826 *P03                        CST0328
   41 IF(PMC)43,42,43                                                   CST0329
   42 PMC#UNPUMP*WPUMP+UNDRVE*1340.4826*(PO-P03)                        CST0330
   43 IF(EEC)45,44,45                                                   CST0331
   44 EEC#UNELCT*PO*1000.                                               CST0332
   45 IF(VPC)47,46,47                                                   CST0333
   46 VPC# (.8854-0.017846*ALEV)*WRECOV+(0.50969-0.0049231*ALEV) *WREJCTCST0334
     1+(0.70854-0.024385*ALEV)*WPROD +(0.0074615*ALEV     +0.24315)*WBLOWCST0335
     2+(0.0033076*ALEV+0.17677)*WMAKUP                                  CST0336
   47 IF(WAIT)49,48,49                                                  CST0337
   48 WAIT#UINTAK*WREJCT                                                CST0338
   49 IF(SITE)51,50,51                                                  CST0339
```

FIGURE 8 (Continued)

```
   50 SITE#UNSITE*WREJCT                                                CST0340
   51 IF(EA)53,52,53                                                    CST0341
   52 EA#UNARAE*(SUMAE+SUMAR-ARS(IE))+ UNARAR*ARS(IE)                   CST0342
   53 IF(BHC)55,54,55                                                   CST0343
   54 BHC#AH*(UNARHT+UNSHHT)                                            CST0344
   55 IF(ES)57,56,57                                                    CST0345
56    ES#USHELV*VOLUME*AMODU+USHELN*SUMN+COSTDM
   57 IF(CIBC)59,58,59                                                  CST0347
   58 CIBC#UNMSCL*WPROD                                                 CST0348
   59 IF(OC2)61,60,61                                                   CST0349
   60 OC2#UNOPR*WPROD                                                   CST0350
   61 CD#(PMC+SITE +WAIT +EA  +ES  +VPC +DEACST   +EEC +BHC +CIBC)*1.0E CST0351
     1-6                                                                CST0352
   62 IF(AJ)64,63,64                                                    CST0353
   63 CALL SUBAJ (CD,RATEIN,AJ)                                         CST0354
   64 CAPI1#CD*1.0E6*AJ                                                 CST0355
      CAPI2#CAPI1/G                                                     CST0356
      CAPI3#SMALLP* CAPI1/(0.365*FG)                                    CST0357
   65 IF(AMSC2)67,66,67                                                 CST0358
   66 AMSC2#UNMAIN*CAPI1                                                CST0359
   67 POCST1#24.0E+6*SMALLD*PO/G                                        CST0360
      POCST2#0.365*FG*POCST1                                            CST0361
   68 HC1#24.0*SMALLB*WPE/(RPE*G)                                       CST0362
      FG365#0.365*FG                                                    CST0363
      HC2#FG365*HC1                                                     CST0364
      CC1#CC2/FG365                                                     CST0365
      OC1#OC2/FG365                                                     CST0366
      AMSC1#AMSC2/FG365                                                 CST0367
      PAJ#SMALLP*AJ                                                     CST0368
      DEA2#DEACST*PAJ                                                   CST0369
      PMC2# PMC*PAJ                                                     CST0370
      EEC2#EEC*PAJ                                                      CST0371
      VPC2#VPC*PAJ                                                      CST0372
      WAIT2#WAIT*PAJ                                                    CST0373
      SITE2#SITE*PAJ                                                    CST0374
      EA2#EA *(PAJ+ SMAPPP)                                             CST0375
      BHC2#BHC*PAJ+ SMAPPH*(BHC-UNSHHT*AH)                              CST0376
      ES2#ES* PAJ                                                       CST0377
      CIBC2#CIBC*PAJ                                                    CST0378
      DEA1#DEA2/FG365                                                   CST0379
      PMC1#PMC2/FG365                                                   CST0380
      EEC1#EEC2/FG365                                                   CST0381
      VPC1#VPC2/FG365                                                   CST0382
      WAIT1#WAIT2/FG365                                                 CST0383
      SITE1#SITE2/FG365                                                 CST0384
      EA1#EA2/FG365                                                     CST0385
      BHC1# BHC2/FG365                                                  CST0386
      ES1# ES2/ FG365                                                   CST0387
      CIBC1#CIBC2/FG365                                                 CST0388
      TC1#HC1+CC1+POCST1+PMC1+SITE1+WAIT1+ES1+EA1+VPC1+EEC1+BHC1+OC1    CST0389
     1+AMSC1+CIBC1+DEA1                                                 CST0390
      TC2#TC1* 0.365*FG                                                 CST0391
      REASIZ#(PO/THERM +WX/(3413.*RP))/(1.0-0.007/THERM)                CST0392
      REACST#54.0*(REASIZ/1.0E3)**0.567                                 CST0393
      TOELEC#PO+0.7*REASIZ/100.00                                       CST0394
      TURCST#45.0*(TOELEC/1000.0)**0.829+5.47*TOELEC/1000.0             CST0395
      RETUB2#SMAPPP*SUMAE+SMAPPH*(BHC-UNSHHT*AH)                        CST0396
      RETUB1#       RETUB2/FG365                                        CST0397
      REACST#REACST *1.0E+6                                             CST0398
```

FIGURE 8 (Continued)

```
      TURCST#TURCST*1.0E+6                                              CST0399
      TC#TC1                                                            CST0400
      WRITE OUTPUT TAPE 9,23,SUMCCE,SUMCCR,SUMAE,SUMAR,SUMCER,SUMN
   23 FORMAT(7E16.8)
      RETURN                                                            CST0401
      END                                                               CST0402
```

FIGURE 8 (Continued)

```
*     LABEL                                                             GSC0001
      SUBROUTINEGSC (M)                                                 GSC0003
C     GSC                                                               GSC0002
      COMMON X,Y,W                                                      GSC0004
      COMMON DATANO                                                     GSC0005
      DIMENSIONX(150,4),Y(150)                                          GSC0006
      EQUIVALENCE(II,II)                                                GSC0007
      EQUIVALENCE        (Y(1),CR),       (Y(2),RP),       (Y(3),HC1),  GSC0008
     1(Y(4),CC1),        (Y(5),PCR1),     (Y(6),PCE1),     (Y(7),PCBH1), GSC0009
     2(Y(8),PCM1),       (Y(9),PMC1),     (Y(10),SITE1),   (Y(11),WAIT1), GSC0010
     3(Y(12),ES1),       (Y(13),EA1),     (Y(14),BHC1),    (Y(15),VPC1), GSC0011
     4(Y(16),EEC1),      (Y(17),OC1),     (Y(18),SCM1),    (Y(19),CIBC1), GSC0012
     5(Y(20),DEA1),      (Y(21),TC1)                                    GSC0013
      EQUIVALENCE        (Y(25),G),       (Y(26),TOTAL),   (Y(27),TSTEAM), GSC0014
     1(Y(28),THF),       (Y(29),TO),      (Y(30),TA),      (Y(31),CO),  GSC0015
     2(Y(32),CP),                         (Y(34),P),                    GSC0016
     3(Y(36),Q)                                                         GSC0017
      EQUIVALENCE        (Y(40),FFHL),    (Y(41),CAPF),    (Y(42),SMALLE), GSC0018
     1(Y(43),HD),        (Y(44),HR),      (Y(45),HE),      (Y(46),HH),  GSC0019
     2(Y(47),HBL),       (Y(48),HPR),     (Y(49),SMALLD),(Y(50),SMALLB), GSC0020
     3(Y(51),SMALLP),    (Y(52),SMAPPP),  (Y(53),SMAPPH),(Y(54),SMA1),  GSC0021
     4(Y(55),SMA2),      (Y(56),A3),      (Y(57),A4),      (Y(58),RATEIN), GSC0022
     5(Y(59),TP)                                                        GSC0023
      EQUIVALENCF        (Y(75),PN),      (Y(76),RPN),     (Y(77),ALPBAR), GSC0024
     1(Y(78),BAROM),     (Y(79),TB),      (Y(80),TCF),     (Y(81),AMBN), GSC0025
     2(Y(82),CSUBP),     (Y(83),ACPSN),   (Y(84),ACPTNK),(Y(85),UBPH),  GSC0026
     3(Y(86),PO),        (Y(87),WX),      (Y(88),WR),      (Y(89),WC),  GSC0027
     4(Y(90),WB),        (Y(91),WY)                                     GSC0028
      EQUIVALENCE        (Y(100),SH),     (Y(101),SE),     (Y(102),SR), GSC0029
     1(Y(103),BIKTH),    (Y(104),BIKTE),  (Y(105),BIKTR),(Y(106),VH),   GSC0030
     2(Y(107),VE),       (Y(108),VR),     (Y(109),DOH),    (Y(110),DOE), GSC0031
     3(Y(111),DOR),      (Y(112),DIH),    (Y(113),DIE),    (Y(114),DIR), GSC0032
     4(Y(115),RH),       (Y(116),RE),     (Y(117),RSR),    (Y(118),RHONK), GSC0033
     5(Y(119),RHOK),     (Y(120),WF),                      (Y(122),WO),  GSC0034
     6(Y(123),NK),       (Y(124),NNK),    (Y(125),UBARH),(Y(126),UBARE), GSC0035
     7(Y(127),UBARR),     (Y(128),AH),     (Y(129),AE),     (Y(130),AR), GSC0036
     8(Y(131),HLH),      (Y(132),ELE),    (Y(133),RLR),    (Y(134),HN), GSC0037
     9(Y(135),ENE),(Y(136),RNR),(Y(137),HBH),(Y(138),HFE),(Y(139),HFR) GSC0038
      COMMONNTOTAL,TS,THF,TO,CO,CP,CR,V,G,SMAPP,SMALLD,SMALLE,DO,DI,    GSC0039
     1H,SMALLB,SMALLP,SMA1,SMA2,P,Q,ERR,II,JJ,KK                        GSC0040
      COMMON HP,CT,C,QH,SMT,TTABLE,TTD,TV,WP,WS,WV                      GSC0041
      COMMON DELST,DELCT,CB,RHO,SUMQH,TB,TCF,TK,TOTAL,T,WB,WC,WF,WO,    GSC0042
     1WPN,WR,AMBDA                                                      GSC0043
       COMMON AS ,SLS, UBAR, OM , HO, HI, TVTT, Z                       GSC0044
      COMMON TAU,CCF,NK,PNK,RHOK,RHONK,ALPHA1,ACPTNK,CPTNK,             GSC0045
     1ACPSN,CPTK,ACPSNK,RHONK                                           GSC0046
      DIMENSION TTABLE(20),WS(100),TS(100),C(100),WP(100),TV(100),HP(100GSC0047
     1),CT(100),TTD(100), SMT(100)                                      GSC0048
      DIMENSION WV(100),QH(100)  ,CFM(100 )                             GSC0049
      DIMENSIONAS(100),SLS(100),        UBAR(100),OM(100),HO(100),      GSC0050
     1TVTT(100),Z(100),HI(100)                                          GSC0051
      COMMON CPSNK, AMBN, AMBNK, HFG, CPT, CI, ALPBAR, SMT2             GSC0052
     1,R,S,HR,HE,HH    ,PI                                              GSC0053
      DIMENSION SMT2(100)                                               GSC0054
      COMMON CFM,  HC,EC,CPSN,CC,                                       GSC0055
     1       A1,A2,PCD,PCPMC,PCPR,PN,WIDTH,      SUM21,                 GSC0056
     2SUM22,SUM24,SUM26,SUMALP,TC,TSTEAM,WPNK   ,WX,WY                  GSC0057
      COMMON DIH, DOH, A1H,A2H                                          GSC0058
     1 ,   HLH, BHC, AH, PCH,UBARH, UBPH, HN, NH                        GSC0059
```

FIGURE 8 (Continued)

```
 COMMON SUMN, SUMAS, SUMLS, PR ,BIK                ,NITER                GSC0060
 COMMON BIKTE, BIKTH, DOE, DIE, SE,VE, BAROM, PO, SH, VH                 GSC0061
 COMMONHC1,HC2,CC1,CC2,PCR1,PCR2,PCE1,PCBH1,PCBH2,PCM1,PCM2,PMC1,        GSC0062
1PMC2,SSC1,SSC2,EC1,EC2,VPC1,VPC2,EEC1,EEC2,BHC1,BHC2,OC1,OC2,SCM1,GSC0063
2SCM2,TCO1,TCO2,TC1,TC2,HD,HBL,HPR,CAPF,AJ,XM,E,A3,A4,A5,A6,A7,A8,      GSC0064
3 A9,PCE2,CAPI1,CAPI2,CIBC1,CIBC2      ,AP,CSUBP                        GSC0065
 COMMONRH,RF   ,CPBT                                                     GSC0066
 COMMON EBEL          ,XCR,RP                                            GSC0067
 DIMENSION EBEL(100,6)                                                   GSC0068
 COMMONDOR,DIR,BIKTR,SR,RSR,VR,TA,FF,HFE,HFR,HBH                         GSC0069
1 ,CFMWZ,CFMWV,HS,HV,FFHL,SUMA,SMAQ,QLN   ,AE,AR,ELE,RLR,ENE,RNR         GSC0070
2 ,XRP  ,UBARE,UBARR,RPN,SSF,SSF1                                        GSC0071
 DIMENSIONCFMWZ(100),HS(100),CFMWV(100)                                  GSC0072
1,FOUT(100),DHOUT(100)                                                   GSC0073
 COMMONXTB,ORITE                                                         GSC0074
 COMMONSITE,SITE1,SITE2,WAIT,WAIT1,WAIT2,ES,ES1,ES2,                     GSC0075
1EA,EA1,EA2                                                              GSC0076
 COMMON PO3,HS1,PMC,EEC,VPC,CIBC                                         GSC0077
 COMMONACID,TNACDY,CLORIN,CAUSTC,DEFOM                                   GSC0078
 COMMONACACID,FACID,WT,WTRAY,RESTM                                       GSC0079
1     , AT,FE,FH,FR,H2,PO1,PO22,PO2,PSTA1,RHOE,RHOR,RHOH,CHRIS           GSC0080
2,ROE                                                                    GSC0081
 COMMONTP,A10,WCO,UTHE,ATHE,THEL,THEN,THEHT,    CTHE1,CTHE2,              GSC0082
1CTHE3,PCTHE1,PCTHE2,THEK,THES,THER,SMALLR,THERC,THEFT,CTHE4,VTHE        GSC0083
2    ,BOBH,FMOD,BOBDH,FOUT,DHOUT,FBOB1,FBOB2,FBOB3,FSTAR1,FSTAR2,        GSC0084
3FSTAR3  ,BOBAC,BOBFA                                                    GSC0085
 COMMON DEACST,DEA2,DEA1,DYEAR,DKGAL    ,RATEIN  ,WPL,CSLTBP             GSC0086
 COMMONVVEV,TRAYFL,WBS,TRAYWD,RESIDT,                                    GSC0087
1TSTH,FREBD,AMODU,ALEV,TWFA,SPL,BDEPH,                                   GSC0088
2CTA,HST   ,ESHELL,RSHELL  ,CSLTBH,SMAPPP,SMAPPH   ,SSF2                 GSC0089
 DIMENSIONVVEV(100),TRAYFL(100),WBS(100),                                GSC0090
1TRAYWD(100),RESIDT(100)                                                 GSC0091
1,ALPHA(100)                                                             GSC0092
 DIMENSION PV(100),A(100),ORHT(100),DELP(100),DENBR(100)                 GSC0093
 COMMON PV,A,ORHT,DELP,DENBR  ,COEFA                                     GSC0094
 COMMON REASIZ,REACST,TOELEC,TURCST,CAPI3,RETUB2,RETUB1,THERM            GSC0095
 COMMON WPS,RS,WPIN,CBS,TBS,TOS,ANS,THS,WBE,WPE,E,IE, ALPHA              GSC0096
1,SUMWP                                                                  GSC0097
 COMMON CBE,RPE,TBE  ,SSF1                                               GSC0098
 DIMENSION WPS(25),RS(25),WPIN(25),CBS(25),TBS(25),TOS(25),ANS(25),GSC0099
1THS(25)                                                                 GSC0100
 DIMENSION PODEL(25),HREC(25),POREC(25),WOS(25),WFS(25),HSUB(25),        GSC0101
1 ELES(25),RLRS(25),WRS(25),HSIS(25)                                     GSC0102
2 ,AES(25)   ,VOLMS(25),ARS(25)                                          GSC0103
1,HLHS(25)                                                               GSC0104
 COMMON ARS,ELES,HREC,HSIS,HSUB,PODEL,POREC,RLRS,VOLMS,                  GSC0105
1WFS,WOS,WRS,AMBDAS,POCST1,POCST2,SUMLE,SUMLR,SUMPOR,SUMWR,WTME,         GSC0106
2WTMR  ,AES                                                              GSC0107
1,HLHS                                                                   GSC0108
 COMMONTOE, HDEL, POBLD,VOLM,HMKUP,POMKUP,WZZ,POPRD,AMSC1,AMSC2,         GSC0109
1CD,DEACS1,DEACS2,PMCFLO,PMCPO                                           GSC0110
 COMMON UDEAHP,UDEAWM,UINTAK,UNARAE,UNARAR,UNARHT,UNCHEM,                GSC0111
1UNDRVE,UNELCT,UNMAIN,UNMSCL,UNOPR,UNPIPE,UNPUMP,                        GSC0112
2UNSHHT,UNSITE,USHELN,VOLUME,WBLOW,WMAKUP,WPROD,WPUMP,WRECOV,WREJCTGSC0113
 DIMENSION PS(25),QS(25),TCFS(25)                                        GSC0114
 DIMENSION RHOKS(25),RHONKS(25),BAROMS(25),WCS(25),NKS(25),              GSC0115
1ENES(25),NNKS(25),RNRS(25),UES(25),URS(25)  ,WBSU(25)    ,UBARA(25)     GSC0116
 COMMON RHOKS,RHONKS,PS,QS,RPS,TCFS,BAROMS,WCS,NKS                       GSC0117
 COMMON ENES,NNKS,RNRS,UES,URS   ,WBSU  ,USHELV,APLANT,ATOT,UBARA        GSC0118
```

FIGURE 8 (Continued)

```
      COMMON DTPD,CL                                                    GSC0119
      COMMON TOTALR
      COMMON CTUBEE,CETSE,CTUBER,CETSR,CITSE,CITSR,CDITS,CDETS
      DIMENSIONCTUBEE(25),CETSE(25),CTUBER(25),CETSR(25),CITSE(25),CITSR40250001
     1(25)
C$******YORK TYPE DEMISTER
      COMMON UMAX, SUMDMA,  DTPDP, COSTDM
      COMMON UALP,DTPDPS
      COMMON AREADM,DPTDM,DTDM,CPROD,WIDDM
      DIMENSION AREADM(100),DPTDM(100),DTDM(100),CPROD(100),WIDDM(100)
     1,DTPDPS(100)   ,DTPDP(100),  SUMDMA(25)
      XPCT#0.0001                                                       GSC0120
      DIMENSION  WT1(25), WT2(25)                                       GSC0121
      NK#NK                                                             GSC0122
      NTOTAL#NTOTAL                                                     GSC0123
      SUMALP#0.0                                                        GSC0124
      SUM23#0.0                                                         GSC0125
      SUM25#0.0                                                         GSC0126
      SUMQH#0.0                                                         GSC0127
      SUM21#0.0                                                         GSC0128
      SUM22#0.0                                                         GSC0129
      SUM24#0.0                                                         GSC0130
      SUM26#0.0                                                         GSC0131
      DO499I#1,NTOTAL                                                   GSC0132
      IF(I-1)492,492,493                                                GSC0133
  493 II#1                                                              GSC0134
      SMT(I+1)#SMT1                                                     GSC0135
      SMT2(I )#SMT1                                                     GSC0136
      IF(ERR)490,1420,490                                               GSC0137
 1420 IF(I    -NK)1421,1421,1422                                        GSC0138
 1421 WT#WF                                                             GSC0139
      RHO#RHONK                                                         GSC0140
      WT1(M)# WR                                                        GSC0141
      WT2(M)# WT-WT1(M)                                                 GSC0142
      TTD(I)#TS(I)-SMT1-RHO-(TS(I)-TV(I))                               GSC0143
      TS(I+1)#TS(I)-RHO                                                 GSC0144
      GO TO 49                                                          GSC0145
 1422 WT#WO                                                             GSC0146
      WT1(M)# WC                                                        GSC0147
      WT2(M)# WT-WT1(M)                                                 GSC0148
      RHO#RHOK                                                          GSC0149
      IF(M-IE)40,41,40                                                  GSC0150
   41 CT(I)#(WT1(M)+WT2(M))*CO       /WT                              GSC0151
      GO TO 42                                                          GSC0152
   40 CT(I)#(WT1(M)*CBS(M+1)+WT2(M)*CO    )/WT                         GSC0153
   42 CT(I+1)#CT(I)                                                     GSC0154
 1423 TTD(I)#TS(I)-SMT1-RHO-(TS(I)-TV(I))                               GSC0155
      TS(I+1)#TS(I)-RHO                                                 GSC0156
      GOTO401                                                           GSC0157
 492  WS(I)#WF-WPIN(M)                                                  GSC0158
      TS(I)#THF                                                         GSC0159
      C(I)#CCF                                                          GSC0160
      WP(I)# WPIN(M )                                                   GSC0161
      WT#WF                                                             GSC0162
      WT1(M)# WR                                                        GSC0163
      WT2(M)# WT-WT1(M)                                                 GSC0164
      TTD(I)#THF-TCF-RHONK-ALPHA1                                       GSC0165
      HP(I)#0.0                                                         GSC0166
      SMT(I+1)#TCF                                                      GSC0167
```

FIGURE 8 (Continued)

```
      SMT2(I )#TCF                                                      GSC0168
      RHO#RHONK                                                         GSC0169
      TS(I+1)#TS(I)-RHO                                                 GSC0170
   49 IF(M -1)50,51,50                                                  GSC0171
   51 CT(I)#(WT1(M)+WT2(M))*CCF     /WT                               GSC0172
      CT(I+1)#CT(I)                                                     GSC0173
      GO TO 401                                                         GSC0174
   50 CT(I)#(WT1(M)*CBS(M)+WT2(M)*CO   )/WT                             GSC0175
      CT(I+1)#CT(I)                                                     GSC0176
  401 C(I+1)#C(I)                                                       GSC0177
  410 TV(I+1)#SMT(I+1)+TTD(I)                                           GSC0178
      II#4                                                              GSC0179
      TAB#TV(I+1)+DTPDP(I)                                              GSC0180
      CALLDINTPL(TAB,C(I+1),DTBPR)                                      GSC0181
      TS2C#TV(I+1)+DTBPR+DTPDP(I)
      IF(ABSF(TS2C-TS(I+1))/TS2C-XPCT)417,411,411                       GSC0183
411   TTD(I)#TS(I+1)-DTBPR-DTPDP(I)-SMT2(I)
      GOTO410                                                           GSC0185
  417 II#2                                                              GSC0186
      CALLDINTPL(TV(I+1),CP,HF)                                         GSC0187
      HF#HF-200.                                                        GSC0188
      HFG#1093.88-.5703*TV(I+1)+1.2819E-4*TV(I+1)**2-.8824E-6*TV(I+1)**3GSC0189
      CALLDINTPL(TS(I),C(I),HS1)                                        GSC0190
      HS1#HS1-200.                                                      GSC0191
      CALLDINTPL(TS(I+1),C(I+1),HS2)                                    GSC0192
      HS2#HS2-200.                                                      GSC0193
      WV(I)#WS(I)*(HS1-HS2)/(HF+HFG-HS2)                                GSC0194
      C2C#(WS(I)*C(I)-WV(I)*CP)/(WS(I)-WV(I))                           GSC0195
      IF(ABSF(C2C-C(I+1))/C2C-XPCT)413,412,412                          GSC0196
  412 C(I+1)#C2C                                                        GSC0197
      GOTO410                                                           GSC0198
  413 WP(I+1)#WP(I)+WV(I)                                               GSC0199
      CALLDINTPL(TV(I),CP,HP1)                                          GSC0200
      HP1#HP1-200.                                                      GSC0201
      CALLDINTPL(TV(I+1),CP,HP2)                                        GSC0202
      HP2#HP2-200.                                                      GSC0203
      WS(I+1)#WS(I)-WV(I)                                               GSC0204
      QLN#(SMAQ*(TS(I)-TA))/SUMA                                        GSC0205
      QH(I)#WS(I)*HS1-WS(I+1)*HS2+WP(I)*HP1-WP(I+1)*HP2-QLN             GSC0206
  419 II#1                                                              GSC0207
      ARG#SMT(I+1)-(TS(I)-TS(I+1))*0.5                                  GSC0208
      ARG#SMT2(I)- (TS(I)- TS(I+1))*0.5                                 GSC0209
      CALL DINTPL(ARG,CT  (I),CPT1)                                     GSC0210
      CALL DINTPL(ARG,CT(I+1),CPT2)                                     GSC0211
      CPT#(CPT1*WT1(M)+CPT2*WT2(M))/WT                                  GSC0212
      SMT(I)#SMT(I+1)-QH(I)/(WT*CPT)                                    GSC0213
      SMT1#SMT(I)                                                       GSC0214
      DEL#TS(I)-TS(I+1)                                                 GSC0215
  414 AMBDA#QH(I)/WV(I)                                                 GSC0216
      CPS#WV(I)*AMBDA/(WS(I)*DEL)                                       GSC0217
      IF(I-NK)421,421,428                                               GSC0218
  421 SUM21#WV(I)+SUM21                                                 GSC0219
      SUM24#CPT*(SMT2(I )-SMT(I))+SUM24                                 GSC0220
      SUM26#SUM26+WV(I)   *AMBDA                                        GSC0221
      SUMQH#SUMQH+QH(I)*WV(I)                                           GSC0222
      SUMALP#SUMALP+TS(I+1)-TV(I+1)                                     GSC0223
      IF(I-NK)499,422,499                                               GSC0224
  422 WPNK#SUM21                                                        GSC0225
      CPTNK#SUM24/(TCF-SMT(NK))                                         GSC0226
```

FIGURE 8 (Continued)

```
      AMBNK#(SUM26        )/WPNK                                    GSC0227
      CPSNK#AMBNK*WPNK/(WF*(THF-TS(NK+1)))                          GSC0228
      ACPSNK#AMBNK/CPSNK                                            GSC0229
      ACPTNK#AMBNK/CPTNK                                            GSC0230
      GOTO499                                                       GSC0231
  428 SUM21#SUM21+WV(I)                                             GSC0232
      SUM25#SUM25+CPT*(SMT2(I )-SMT(I))                             GSC0233
      SUM26#SUM26+WV(I)  *AMBDA                                     GSC0234
      SUMQH#QH(I)*WV(I)+SUMQH                                       GSC0235
      SUMALP#SUMALP+TS(I+1)-TV(I+1)                                 GSC0236
  499 CONTINUE                                                      GSC0237
      WPN#SUM21                                                     GSC0238
      CPTK#SUM25/(SMT2(NK+1)-SMT(NTOTAL))                           GSC0239
      AMBN#SUM26/WPN                                                GSC0240
      CPSN#AMBN*WPN/(WF*(THF-  TS(NTOTAL+1)))                       GSC0241
      ACPSN#AMBN/CPSN                                               GSC0242
  431 ALPHA1#TS(2)-TV(2)                                            GSC0243
      SUMQH#SUMQH/WPN                                               GSC0244
      ALPBAR#SUMALP/TOTAL                                           GSC0245
C     2E                                                            GSC0246
      II#2                                                          GSC0247
      CALL DINTPL(THF,CCF,HCFTH)                                    GSC0248
      IF(IE-1)1,2,1                                                 GSC0249
    1 CALL DINTPL(TCF,CO,HCOTCF)                                    GSC0249
      CALL DINTPL(TV(1),CP,HCPV1)                                   GSC0250
      CALL DINTPL(TCF,CB,HCBCF)                                     GSC0251
      CPBT#(WF*(HCFTH-HCOTCF)+WPIN(M)*(HCPV1-HCFTH)                 GSC0252
     1+WR*(HCOTCF-HCBCF))/(WF*(THF-TCF))                            GSC0253
      GO TO 490                                                      GSC0253
    2 CALL DINTPL(TCF,CCF,HCOTCF)                                     GSC0253
      CPBT#    (HCFTH-HCOTCF)/ (THF-TCF)                             GSC0254
  490 RETURN                                                        GSC0254
      END                                                           GSC0255
```

FIGURE 8 (Continued)

```
*     LABEL                                                          AJ 0001
      SUBROUTINE SUBAJ(CD,RATEIN,AJ)                                 AJ 0002
      IF(CD-80.0)1000,1001,1001                                      AJ 0003
 1000 AJTS#1.02-1.25*CD*1.0E-4                                       AJ 0004
      GO TO 1002                                                     AJ 0005
 1001 AJTS#1.01                                                      AJ 0006
 1002 IF(CD-200.0)1003,1004,1004                                     AJ 0007
 1003 AJCT#1.113-0.0165*CD/100.0                                     AJ 0008
      AJSD#1.0629-0.349E-3*CD+0.9300E-6*CD**2                        AJ 0009
      GO TO 1005                                                     AJ 0010
 1004 AJCT#1.08                                                      AJ 0011
      AJSD#1.03                                                      AJ 0012
 1005 IF(CD-40.0)1006,1007,1007                                      AJ 0013
 1006 TIME#12.0+12.0*CD/40.0                                         AJ 0014
      GO TO 1010                                                     AJ 0015
 1007 IF(CD-200.0)1008,1009,1009                                     AJ 0016
 1008 TIME #24.0+36.0*(CD-40.0)/160.0                                AJ 0017
      GO TO 1010                                                     AJ 0018
 1009 TIME#48.0                                                      AJ 0019
 1010 AJIC#1.0+0.0375*TIME*RATEIN                                    AJ 0020
      AJ#AJTS*AJSD*AJCT*AJIC                                         AJ 0021
      RETURN                                                         AJ 0022
      END                                                            AJ 0023
```

FIGURE 8 (Continued)

```
*     LABEL                                                             PUT0001
      SUBROUTINE OUTPUT                                                 PUT0002
      COMMON X,Y,W                                                      PUT0003
      COMMON DATANO                                                     PUT0004
      DIMENSIONX(150,4),Y(150)                                          PUT0005
      EQUIVALENCE(II,II)                                                PUT0006
      EQUIVALENCE        (Y(1),CR),       (Y(2),RP),       (Y(3),HC1),  PUT0007
     1(Y(4),CC1),        (Y(5),PCR1),     (Y(6),PCE1),     (Y(7),PCBH1), PUT0008
     2(Y(8),PCM1),       (Y(9),PMC1),     (Y(10),SITE1),   (Y(11),WAIT1), PUT0009
     3(Y(12),ES1),       (Y(13),EA1),     (Y(14),BHC1),    (Y(15),VPC1), PUT0010
     4(Y(16),EEC1),      (Y(17),OC1),     (Y(18),SCM1),    (Y(19),CIBC1), PUT0011
     5(Y(20),DEA1),      (Y(21),TC1)                                    PUT0012
      EQUIVALENCE        (Y(25),G),       (Y(26),TOTAL),   (Y(27),TSTEAM), PUT0013
     1(Y(28),THF),       (Y(29),TO),      (Y(30),TA),      (Y(31),CO),  PUT0014
     2(Y(32),CP),                         (Y(34),P),                    PUT0015
     3(Y(36),Q)                                                         PUT0016
      EQUIVALENCE        (Y(40),FFHL),    (Y(41),CAPF),    (Y(42),SMALLE), PUT0017
     1(Y(43),HD),        (Y(44),HR),      (Y(45),HE),      (Y(46),HH),  PUT0018
     2(Y(47),HBL),       (Y(48),HPR),     (Y(49),SMALLD),(Y(50),SMALLB), PUT0019
     3(Y(51),SMALLP),    (Y(52),SMAPPP),  (Y(53),SMAPPH),(Y(54),SMA1),  PUT0020
     4(Y(55),SMA2),      (Y(56),A3),      (Y(57),A4),      (Y(58),RATEIN), PUT0021
     5(Y(59),TP)                                                        PUT0022
      EQUIVALENCE        (Y(75),PN),      (Y(76),RPN),     (Y(77),ALPBAR), PUT0023
     1(Y(78),BAROM),     (Y(79),TB),      (Y(80),TCF),     (Y(81),AMBN), PUT0024
     2(Y(82),CSUBP),     (Y(83),ACPSN),   (Y(84),ACPTNK),(Y(85),UBPH),  PUT0025
     3(Y(86),PO),        (Y(87),WX),      (Y(88),WR),      (Y(89),WC),  PUT0026
     4(Y(90),WB),        (Y(91),WY)                                     PUT0027
      EQUIVALENCE        (Y(100),SH),     (Y(101),SE),     (Y(102),SR), PUT0028
     1(Y(103),BIKTH),    (Y(104),BIKTE),  (Y(105),BIKTR),(Y(106),VH),   PUT0029
     2(Y(107),VE),       (Y(108),VR),     (Y(109),DOH),    (Y(110),DOE), PUT0030
     3(Y(111),DOR),      (Y(112),DIH),    (Y(113),DIE),    (Y(114),DIR), PUT0031
     4(Y(115),RH),       (Y(116),RE),     (Y(117),RSR),    (Y(118),RHONK), PUT0032
     5(Y(119),RHOK),     (Y(120),WF),                      (Y(122),WO),  PUT0033
     6(Y(123),NK),       (Y(124),NNK),    (Y(125),UBARH),(Y(126),UBARE), PUT0034
     7(Y(127),UBARR),     (Y(128),AH),     (Y(129),AE),     (Y(130),AR), PUT0035
     8(Y(131),HLH),      (Y(132),ELE),    (Y(133),RLR),    (Y(134),HN), PUT0036
     9(Y(135),ENE),(Y(136),RNR),(Y(137),HBH),(Y(138),HFE),(Y(139),HFR)  PUT0037
      COMMONNTOTAL,TS,THF,TO,CO,CP,CR,V,G,SMAPP,SMALLD,SMALLE,DO,DI,    PUT0038
     1H,SMALLB,SMALLP,SMA1,SMA2,P,Q,ERR,II,JJ,KK                        PUT0039
      COMMON HP,CT,C,OH,SMT,TTABLE,TTD,TV,WP,WS,WV                      PUT0040
      COMMON DELST,DELCT,CB,RHO,SUMQH,TB,TCF,TK,TOTAL,T,WB,WC,WF,WO,    PUT0041
     1WPN,WR,AMBDA                                                      PUT0042
       COMMON AS ,SLS, UBAR, OM , HO, HI, TVTT, Z                       PUT0043
      COMMON TAU,CCF,NK,PNK,RHOK,RHONK,ALPHA1,ACPTNK,CPTNK,             PUT0044
     1ACPSN,CPTK,ACPSNK,RHONK                                           PUT0045
      DIMENSION TTABLE(20),WS(100),TS(100),C(100),WP(100),TV(100),HP(100PUT0046
     1),CT(100),TTD(100), SMT(100)                                      PUT0047
      DIMENSION WV(100),QH(100)  ,CFM(100 )                             PUT0048
      DIMENSIONAS(100),SLS(100),        UBAR(100),OM(100),HO(100),      PUT0049
     1TVTT(100),Z(100),HI(100)                                          PUT0050
      COMMON CPSNK, AMBN, AMBNK, HFG, CPT, CI, ALPBAR, SMT2             PUT0051
     1,R,S,HR,HE,HH    ,PI                                              PUT0052
      COMMON CFM,  HC,EC,CPSN,CC,                                       PUT0053
     1       A1,A2,PCD,PCPMC,PCPR,PN,WIDTH,      SUM21,                 PUT0054
     2SUM22,SUM24,SUM26,SUMALP,TC,TSTEAM,WPNK   ,WX,WY                  PUT0055
      DIMENSION SMT2(100)                                               PUT0056
      COMMON DIH, DOH, A1H,A2H                                          PUT0057
     1 ,   HLH, BHC, AH, PCH,UBARH, UBPH, HN, NH                        PUT0058
       COMMON SUMN, SUMAS, SUMLS, PR ,BIK              ,NITER            PUT0059
```

FIGURE 8 (Continued)

```
 COMMON BIKTE, BIKTH, DOE, DIE, SE,VE, BAROM, PO, SH, VH                PUT0060
 COMMONHC1,HC2,CC1,CC2,PCR1,PCR2,PCE1,PCBH1,PCBH2,PCM1,PCM2,PMC1,       PUT0061
1PMC2,SSC1,SSC2,EC1,EC2,VPC1,VPC2,EEC1,EEC2,BHC1,BHC2,OC1,OC2,SCM1,PUT0062
2SCM2,TCC1,TCO2,TC1,TC2,HD,HBL,HPR,CAPF,AJ,XM,E,A3,A4,A5,A6,A7,A8,  PUT0063
3 A9,PCE2,CAPI1,CAPI2,CIBC1,CIBC2      ,AP,CSUBP                        PUT0064
 COMMONRH,RF   ,CPBT                                                    PUT0065
 COMMON EBEL          ,XCR,RP                                           PUT0066
 DIMENSION EBEL(100,6)                                                  PUT0067
 COMMONDOR,DIR,BIKTR,SR,RSR,VR,TA,FF,HFE,HFR,HBH                        PUT0068
1  ,CFMWZ,CFMWV,HS,HV,FFHL,SUMA,SMAQ,QLN   ,AE,AR,ELE,RLR,ENE,RNR      PUT0069
2  ,XRP  ,UBARE,UBARR,RPN,SSF,SSF1                                      PUT0070
 DIMENSIONCFMWZ(100),HS(100),CFMWV(100)                                 PUT0071
1,FOUT(100),DHOUT(100)                                                  PUT0072
 COMMONXTB,ORITE                                                        PUT0073
 COMMONSITE,SITE1,SITE2,WAIT,WAIT1,WAIT2,ES,ES1,ES2,                    PUT0074
1EA,EA1,EA2                                                             PUT0075
 COMMON PO3,HS1,PMC,EEC,VPC,CIBC                                        PUT0076
 COMMONACID,TNACDY,CLORIN,CAUSTC,DEFOM                                  PUT0077
 COMMONACACID,FACID,WT,WTRAY,RESTM                                      PUT0078
1     , AT,FE,FH,FR,H2,PO1,PO22,PO2,PSTA1,RHOE,RHOR,RHOH,CHRIS         PUT0079
2,ROE                                                                   PUT0080
 COMMONTP,A10,WCO,UTHE,ATHE,THEL,THEN,THEHT,    CTHE1,CTHE2,            PUT0081
1CTHE3,PCTHE1,PCTHE2,THEK,THES,THER,SMALLR,THERC,THEFT,CTHE4,VTHE      PUT0082
2    ,BOBH,FMOD,BOBDH,FOUT,DHOUT,FBOB1,FBOB2,FBOB3,FSTAR1,FSTAR2,      PUT0083
3FSTAR3 ,BOBAC,BOBFA                                                    PUT0084
 COMMON DEACST,DEA2,DEA1,DYEAR,DKGAL    ,RATEIN                         PUT0085
1,WPL,CSLTBP                                                            PUT0086
 COMMONVVEV,TRAYFL,WBS,TRAYWD,RESIDT,                                   PUT0087
1TSTH,FREBD,AMODJ,ALEV,TWFA,SPL,BDEPH,                                  PUT0088
2CTA,HST   ,ESHELL,RSHELL ,CSLTBH,SMAPPP,SMAPPH ,SSF2                   PUT0089
 DIMENSIONVVEV(100),TRAYFL(100),WBS(100),                               PUT0090
1TRAYWD(100),RESIDT(100)                                                PUT0091
1,ALPHA(100)                                                            PUT0092
 COMMON PV,A,ORHT,DELP,DENBR ,COEFA                                     PUT0093
 DIMENSION PV(100),A(100),ORHT(100),DELP(100),DENBR(100)                PUT0094
 COMMON REASIZ,REACST,TOELEC,TURCST,CAPI3,RETUB2,RETUB1,THERM           PUT0095
 COMMON WPS,RS,WPIN,CBS,TBS,TOS,ANS,THS,WBE,WPE,E,IE, ALPHA             PUT0096
1,SUMWP                                                                 PUT0097
 COMMON CBE,RPE,TBE ,SSF1                                               PUT0098
 DIMENSION WPS(25),RS(25),WPIN(25),CBS(25),TBS(25),TOS(25),ANS(25),PUT0099
1THS(25)                                                                PUT0100
 DIMENSION PODEL(25),HREC(25),POREC(25),WOS(25),WFS(25),HSUB(25),       PUT0101
1 ELES(25),RLRS(25),WRS(25),HSIS(25)                                    PUT0102
2 ,AES(25)   ,VOLMS(25),ARS(25)                                         PUT0103
1,HLHS(25)                                                              PUT0104
 COMMON ARS,ELES,HREC,HSIS,HSUB,PODEL,POREC,RLRS,VOLMS,                 PUT0105
1WFS,WOS,WRS,AMBDAS,POCST1,POCST2,SUMLE,SUMLR,SUMPOR,SUMWR,WTME,        PUT0106
2WTMR ,AES                                                              PUT0107
1,HLHS                                                                  PUT0108
 COMMONTOE, HDEL, POBLD,VOLM,HMKUP,POMKUP,WZZ,POPRD,AMSC1,AMSC2,        PUT0109
1CD,DEACS1,DEACS2,PMCFLO,PMCPO                                          PUT0110
 COMMON UDEAHP,UDEAWM,UINTAK,UNARAE,UNARAR,UNARHT,UNCHEM,               PUT0111
1UNDRVE,UNELCT,UNMAIN,UNMSCL,UNOPR,UNPIPE,UNPUMP,                       PUT0112
2UNSHHT,UNSITE,USHELN,VOLUME,WBLOW,WMAKUP,WPROD,WPUMP,WRECOV,WREJCTPUT0113
 DIMENSION PS(25),QS(25),TCFS(25)                                       PUT0114
 DIMENSION RHOKS(25),RHONKS(25),BAROMS(25),WCS(25),NKS(25),             PUT0115
1ENES(25),NNKS(25),RNRS(25),UES(25),URS(25)  ,WBSU(25)    ,UBARA(25) PUT0116
 COMMON RHOKS,RHONKS,PS,QS,RPS,TCFS,BAROMS,WCS,NKS                      PUT0117
 COMMON ENES,NNKS,RNRS,UES,URS   ,WBSU  ,USHELV,APLANT,ATOT,UBARA       PUT0118
```

FIGURE 8 (Continued)

```
      COMMON DTPD,CL                                                    PUT0119
      COMMON TOTALR
      COMMON CTUBEE,CETSE,CTUBER,CETSR,CITSE,CITSR,CDITS,CDETS
      DIMENSIONCTUBEE(25),CETSE(25),CTUBER(25),CETSR(25),CITSE(25),CITSR4025000I
     I(25)
C$******YORK TYPE DEMISTER
      COMMON UMAX, SUMDMA,  DTPDP, COSTDM
      COMMON UALP,DTPDPS
      COMMON AREADM,DPTDM,DTDM,CPROD,WIDDM
      DIMENSION AREADM(100),DPTDM(100),DTDM(100),CPROD(100),WIDDM(100)
     I,DTPDPS(100)  ,DTPDP(100),  SUMDMA(25)
      COMMON YDTPD
      DIMENSION YDTPD(8,100)
      COMMONDPREQ
      DIMENSION DPREQ(100)                                              PUT0120
      NN#NTOTAL                                                         PUT0121
      NNK#NN-NK                                                         PUT0122
      IF(KK)1,2,1                                                       PUT0132
    1 WRITE          TAPE 7,     (I,TTD(I),CT(I),C(I),C(I+1),QH(I),     PUT0133
     IUBAR(I),HI(I),HO(I),OM(I),AS(I),SLS(I),Z(I),I#1,NTOTAL)           PUT0134
      WRITE          TAPE7,      (I,WV(I),WS(I+1),WP(I+1),TV(I+1),TS(I), TSPUT0135
     I(I+1),SMT(I),SMT2(I ),CFMWV(I),CFMWZ(I),I#1,NTOTAL)               PUT0136
      WRITE          TAPE 7,    (I,VVEV(I),TRAYFL(I),TRAYWD(I),RESIDT(I),  PUT0150
     IPV(I),DELP(I),DPREQ(I),A(I),ALPHA(I),YDTPD(KK,I),I#1,NTOTAL)
   15 RETURN                                                            PUT0152
    2 IF(ORITE)15,16,15                                                 PUT0153
   16 II#IE                                                             PUT0154
      REWIND 7                                                          PUT0155
      REWIND 8
      DO 3 K#1,IE                                                       PUT0156
      WRITE OUTPUT TAPE6,4,II                                           PUT0157
    4 FORMAT(7H1EFFECT   5X   I5)                                       PUT0158
      NTOTAL#ANS(II)                                                    PUT0159
      WRITEOUTPUTTAPE9,212                                              PUT0160
  212 FORMAT(6H0STAGE 2X 3HTTD6X2HCT5X2HC16X2HC210X2HQN                 PUT0161
     I9X4HUBAR5X2HHI6X2HHO7X2HOM9X2HAS7X2HLS6X7HTUBE NO                 PUT0162
     2/1H )                                                             PUT0163
  213 FORMAT(6H0STAGE5X2HWV14X3HWS213X3HWP210X3HTV25X 3HTS1 5X          PUT0164
     I3HTS25X2HT16X2HT23X9HBRINE CFM  3X 9HPROD CFM     /1H  )         PUT0165
      READ           TAPE 7,     (I,TTD(I),CT(I),C(I),C(I+1),QH(I),     PUT0166
     IUBAR(I),HI(I),HO(I),OM(I),AS(I),SLS(I),Z(I),I#1,NTOTAL)           PUT0167
      WRITE OUTPUT TAPE 9,210,(I,TTD(I),CT(I),C(I),C(I+1),QH(I),        PUT0168
     IUBAR(I),HI(I),HO(I),OM(I),AS(I),SLS(I),Z(I),I#1,NTOTAL)           PUT0169
      WRITE OUTPUT TAPE6,4,II                                           PUT0170
      WRITEOUTPUTTAPE9,213                                              PUT0171
      READ           TAPE7,      (I,WV(I),WS(I+1),WP(I+1),TV(I+1),TS(I), TSPUT0172
     I(I+1),SMT(I),SMT2(I ),CFMWV(I),CFMWZ(I),I#1,NTOTAL)               PUT0173
      WRITE OUTPUT TAPE9, 211,(I,WV(I),WS(I+1),WP(I+1),TV(I+1),TS(I), TSPUT0174
     I(I+1),SMT(I),SMT2(I ),CFMWV(I),CFMWZ(I),I#1,NTOTAL)               PUT0175
  210 FORMAT(I4,F8.4,3F8.5,E16.8,4F8.2,E14.6,F8.3,E14.6)                PUT0176
  211 FORMAT(I4,3E16.8,5F8.2, 2E14.6)                                   PUT0177
      READ           TAPE 7,    (I,VVEV(I),TRAYFL(I),TRAYWD(I),RESIDT(I),  PUT0178
     IPV(I),DELP(I),DPREQ(I),A(I),ALPHA(I),DTPDPS(I),I#1,NTOTAL)            PUT
      WRITE OUTPUT TAPE6,4,II                                           PUT0180
      WRITE OUTPUT TAPE 9,21,(I,VVEV(I),TRAYFL(I),TRAYWD(I),RESIDT(I),  PUT0181
     IPV(I),DELP(I),DPREQ(I),A(I),ALPHA(I),DTPDPS(I),I#1,NTOTAL)
   21 FORMAT(24H0ONE LEVEL OF ONE MODULE  /7X 10HVAPOR VEL      2X 9HTRAPUT0183
     IY FLOW 3X 10HTRAY WIDTH  3X 8HRES TIME16X 4HDELP 8X 4HDELP/       PUT0184
     I                                          6H STAGE 3X 6HFT/SPUT0185
```

FIGURE 8 (Continued)

```
    2EC 6X 8HLB/HR FT  6X 2HFT   7X 3HSEC 10X 2HPV 6X9HAVAILABLE 4X     PUT0186
    18HREQUIRED 8X 1HA 8X    5HALPHA 2X 4HDTPD                          PUT0187
    3          /1H /(I4,F12.6,E14.6,2F11.6,4E12.5,F8.3,F5.2))           PUT0188
     IF(UMAX)12,851,12
   12 IF(UALP)5,851,5
    5 READ          TAPE 8,     (I,AREADM(I),DPTDM(I),DTDM(I),
    1CPROD(I),WIDDM(I),I#1,NTOTAL)
     WRITE OUTPUT TAPE6,4,II
     WRITE OUTPUT TAPE 6, 1404
     WRITE OUTPUT TAPE 6,1403,(I,AREADM(I),DPTDM(I),DTDM(I),
    1CPROD(I),WIDDM(I),I#1,NTOTAL)
 1403 FORMAT(I6,5E16.8)
 1404 FORMAT(6H STAGE 5X 7HAREA DM 12X 5HDPTDM  12X  4HDTDM  12X
    1 5HCPROD  12X   5HWIDDM   )
  851 II#II-1
    3 CONTINUE                                                          PUT0190
     RETURN                                                             PUT0191
     END                                                                PUT0192
```

FIGURE 8 (Continued)

```
*     LABEL                                                             BPR0001
      SUBROUTINEBOPR(T,C,BPR)                                           BPR0002
      A1#0.1014380E-1                                                   BPR0003
      A2#0.1021815E+2                                                   BPR0004
      A3#-.6386588E-4                                                   BPR0005
      A4#0.6118005E-1                                                   BPR0006
      A5#0.8809554E+1                                                   BPR0007
      A6#0.2386759E-6                                                   BPR0008
      A7#0.2214495E-4                                                   BPR0009
      A8#0.1714722                                                      BPR0010
      A9#0.7173776E+2                                                   BPR0011
      A10#0.1170617E-9                                                  BPR0012
      A11#0.1042795E-6                                                  BPR0013
      A12#0.3620461                                                     BPR0014
      A13#0.7823281E-4                                                  BPR0015
      A14#-.5218751E-6                                                  BPR0016
      IF(C-0.12)500,500,50                                              BPR0017
  500 IF(C-0.02)1000,1000,10                                            BPR0018
 1000 CX#.02                                                            BPR0019
      GOTO20                                                            BPR0020
   10 CX#C                                                              BPR0021
   20 CONTINUE                                                          BPR0022
      BPX#A1+A2*CX+A3*T+A4*CX*T+A5*CX**2                                BPR0023
     1 +A6*T**2+A7*CX*T**2+A8*CX**2*T                                   BPR0024
     2 +A9*CX**3+A10*T**3+A11*CX*T**3                                   BPR0025
     3 +A12*CX**3*T+A13*CX**2*T**2                                      BPR0026
     4 +A14*CX**2*T**3                                                  BPR0027
      IF(C-0.02)30,300,300                                              BPR0028
  300 BPR#BPX                                                           BPR0029
      GOTO40                                                            BPR0030
   30 BPR#C*BPX/.02                                                     BPR0031
      GOTO40                                                            BPR0032
   50 CONTINUE                                                          BPR0033
      A1#-.1441403E1                                                    BPR0034
      A2#.3791963E2                                                     BPR0035
      A3#.1081565E-1                                                    BPR0036
      A4#-.1253869                                                      BPR0037
      A5#-.1679212E3                                                    BPR0038
      A6#-.4486056E-4                                                   BPR0039
      A7#.7590168E-3                                                    BPR0040
      A8#.1200749E1                                                     BPR0041
      A9#.4579313E3                                                     BPR0042
      A10#.4010406E-7                                                   BPR0043
      A11#-.439359E-6                                                   BPR0044
      A12#-.1505255E1                                                   BPR0045
      A13#-.3665256E-2                                                  BPR0046
      A14#.1280709E-5                                                   BPR0047
      A15#.5852867E-2                                                   BPR0048
      A16#0.                                                            BPR0049
      CX#C                                                              BPR0050
      BPX#A1+A2*CX+A3*T+A4*CX*T+A5*CX**2+A6*T**2                        BPR0051
     1+A7*CX*T**2+A8*CX**2*T+A9*CX**3+A10*T**3+                         BPR0052
     2A11*CX*T**3+A12*CX**3*T+A13*CX**2*T**2+A14*CX**2*                 BPR0053
     3T**3+A15*CX**3*T**2+A16*CX**3*T**3                                BPR0054
      BPR#BPX                                                           BPR0055
   40 RETURN                                                            BPR0056
      END                                                               BPR0057
```

FIGURE 8 (Continued)

```
*     LABEL
      SUBROUTINE SMAP (WPL,CSLTUB,RATEIN,SMAPP)
      IF(WPL-CSLTUB)790,791,790
  791 SMAPP#0.0
      GO TO 792
  790 TERP#WPL/CSLTUB
      SUMI#0.0
      ITERP#TERP
      IF(TERP-FLOATF(ITERP))799,798,799
  798 ITERP#ITERP-1
  799 DO 797 I#1,ITERP
  797 SUMI#SUMI+(1.0+RATEIN)**(WPL-FLOATF(I)*CSLTUB)
      SMAPP#RATEIN*SUMI/((1.0+RATEIN)**WPL-1.0)
  792 RETURN
      END
```

FIGURE 8 (Continued)

```
*     LABEL
      SUBROUTINE DINTPL(ARG,ARU,AXY)
      COMMON II
      EQUIVALENCE(II,II)
      ERR#0.0
      I#II
      SAVET#T
      SAVEC#C
      C#ARU
      T#ARG
      GOTO(1,2,7,4,5,6,7),II
    1 XX#((1.-C)/18.)/((1.-C)/18.+C/58.45)
      CP#-.12512372E1+.22664212E1*XX
      AXY#CP
      GO TO 10
C     II#2
C     ENTHALPY OF SALINE SOLUTION  RANGE OF DATA WAS 0 - 24 PERCENT
C     CONCENTRATION AND 40 - 300 DEGREES FARENHEIT.
C
    2 XX#((1.-C)/18.)/((1.-C)/18.+C/58.45)
      H#200.+.11000455E4-.22560686E4*XX+.11227276E4*XX**2
     1-.12512372E1*T+.22664212E1*XX*T
      AXY#H
      GO TO10
C     II#4
C     BOILING POINT ELEVATION FOR SALINE SOLUTION .  RANGE OF DATA WAS
C     2 - 28 PERCENT CONCENTRATION AND 77 - 392 DEGREES FARENHEIT.
    4 CALL BOPR(T,C,AXY)
      GOTO 10
C     II#5
C     DENSITY OF SALINE SOLUTION.  RANGE OF DATA WAS 0 - 26 PERCENT
C     CONCENTRATION AND 40 - 300 DEGREES FARENHEIT.
C
5     AXY#62.707172+49.364088*C-.43955304E-2*T
     1-.32554667E-1*C*T-.46076921E-4*T**2+.63240299E-4
     2*T**2*C
      GOTO 10
C     II#6   THERMAL CONDUCTIVITY OF SALINE SOLUTION.  RANGE OF DATA
C            0 - 24 PERCENT CONCENTRATION AND 40 - 300 DEGREES FARENHEIT.
C
6     AXY#(.30157913+.697989E-3*T-.12506E-5*T**2
     1-.2072E-10*T**3)*(-.1687109*C+1.)
      GO TO 10
C     II#7
C     VISCOSITY OF SALINE SOLUTION.  RANGE OF DATA WAS 0 - 24 PERCENT
C     CONCENTRATION AND 40 - 210 DEGREES FARENHEIT.
C
7     R#T+459.69
      AXY#EXPF(-10.592566+.4606532E-2*R-11.591155*C
     1+.12602329E-1*C*R+4759.5941/R+3863.7378*C/R)
   10 C#SAVEC
      T#SAVET
      RETURN
      END
```

FIGURE 8 (Continued)

```
*     LABEL                                                             STA0001
      SUBROUTINE DEMIST(M)
C$******YORK TYPE DEMISTER
      COMMON X,Y,W                                                      STA0005
      COMMON DATANO                                                     STA0006
      DIMENSIONX(150,4),Y(150)                                          STA0007
      EQUIVALENCE(II,II)                                                STA0008
      EQUIVALENCE        (Y(1),CR),       (Y(2),RP),       (Y(3),HC1),   STA0009
     1(Y(4),CC1),        (Y(5),PCR1),     (Y(6),PCE1),     (Y(7),PCBH1), STA0010
     2(Y(8),PCM1),       (Y(9),PMC1),     (Y(10),SITE1),   (Y(11),WAIT1), STA0011
     3(Y(12),ES1),       (Y(13),EA1),     (Y(14),BHC1),    (Y(15),VPC1), STA0012
     4(Y(16),EEC1),      (Y(17),OC1),     (Y(18),SCM1),    (Y(19),CIBC1), STA0013
     5(Y(20),DEA1),      (Y(21),TC1)                                    STA0014
      EQUIVALENCE        (Y(25),G),       (Y(26),TOTAL),   (Y(27),TSTEAM), STA0015
     1(Y(28),THF),       (Y(29),TO),      (Y(30),TA),      (Y(31),CO),   STA0016
     2(Y(32),CP),                         (Y(34),P),                     STA0017
     3(Y(36),Q)                                                         STA0018
      EQUIVALENCE        (Y(40),FFHL),    (Y(41),CAPF),    (Y(42),SMALLE), STA0019
     1(Y(43),HD),        (Y(44),HR),      (Y(45),HE),      (Y(46),HH),   STA0020
     2(Y(47),HBL),       (Y(48),HPR),     (Y(49),SMALLD),(Y(50),SMALLB), STA0021
     3(Y(51),SMALLP),    (Y(52),SMAPPP),  (Y(53),SMAPPH),(Y(54),SMA1),  STA0022
     4(Y(55),SMA2),      (Y(56),A3),      (Y(57),A4),      (Y(58),RATEIN), STA0023
     5(Y(59),TP)                                                        STA0024
      EQUIVALENCE        (Y(75),PN),      (Y(76),RPN),     (Y(77),ALPBAR), STA0025
     1(Y(78),BAROM),     (Y(79),TB),      (Y(80),TCF),     (Y(81),AMBN), STA0026
     2(Y(82),CSUBP),     (Y(83),ACPSN),   (Y(84),ACPTNK),(Y(85),UBPH),  STA0027
     3(Y(86),PO),        (Y(87),WX),      (Y(88),WR),      (Y(89),WC),   STA0028
     4(Y(90),WB),        (Y(91),WY)                                     STA0029
      EQUIVALENCE        (Y(100),SH),     (Y(101),SE),     (Y(102),SR),  STA0030
     1(Y(103),BIKTH),    (Y(104),BIKTE),  (Y(105),BIKTR),(Y(106),VH),   STA0031
     2(Y(107),VE),       (Y(108),VR),     (Y(109),DOH),    (Y(110),DOE), STA0032
     3(Y(111),DOR),      (Y(112),DIH),    (Y(113),DIF),    (Y(114),DIR), STA0033
     4(Y(115),RH),       (Y(116),RE),     (Y(117),RSR),    (Y(118),RHONK), STA0034
     5(Y(119),RHOK),     (Y(120),WF),                      (Y(122),WO),  STA0035
     6(Y(123),NK),       (Y(124),NNK),    (Y(125),UBARH),(Y(126),UBARE), STA0036
     7(Y(127),UBARR),     (Y(128),AH),     (Y(129),AE),     (Y(130),AR), STA0037
     8(Y(131),HLH),      (Y(132),ELE),    (Y(133),RLR),    (Y(134),HN),  STA0038
     9(Y(135),ENE),(Y(136),RNR),(Y(137),HBH),(Y(138),HFE),(Y(139),HFR)  STA0039
      COMMONNTOTAL,TS,THF,TO,CO,CP,CR,V,G,EL,SMALLD,SMALLE,DC,DI,        STA0040
     1H,SMALLB,SMALLP,SMA1,SMA2,P,Q,ERR,II,JJ,KK                        STA0041
      COMMON HP,CT,C,QH,SMT,TTABLE,TTD,TV,WP,WS,WV                      STA0042
      COMMON DELST,DELCT,CB,RHO,SUMQH,TB,TCF,TK,TOTAL,T,WB,WC,WF,WO,    STA0043
     1WPN,WR,AMBDA                                                      STA0044
       COMMON AS ,SLS, UBAR, OM , HO, HI, TVTT, Z                       STA0045
      COMMON TAU,CCF,NK,PNK,RHOK,RHONK,ALPHA1,ACPTNK,CPTNK,             STA0046
     1ACPSN,CPTK,ACPSNK,RHONK                                           STA0047
      DIMENSION TTABLE(20),WS(100),TS(100),C(100),WP(100),TV(100),HP(100STA0048
     1),CT(100),TTD(100), SMT(100)                                      STA0049
      DIMENSION WV(100),QH(100)  ,CFM(100 )                             STA0050
      DIMENSIONAS(100),SLS(100),        UBAR(100),OM(100),HO(100),      STA0051
     1TVTT(100),Z(100),HI(100)                                          STA0052
      COMMON CPSNK, AMBN, AMBNK, HFG, CPT, CI, ALPBAR, SMT2             STA0053
     1,R,S,HR,HE,HH    ,PI                                              STA0054
      COMMON CFM,  HC,EC,CPSN,CC,                                       STA0055
     1       A1,A2,PCD,PCPMC,PCPR,PN,WIDTH,      SUM21,                 STA0056
     2SUM22,SUM24,SUM26,SUMALP,TC,TSTEAM,WPNK   ,WX,WY                  STA0057
      DIMENSION SMT2(100)                                               STA0058
      COMMON DIH, DOH, AIH,A2H                                          STA0059
     1 ,   HLH, BHC, AH, PCH,UBARH, UBPH, HN, NH                        STA0060
```

FIGURE 8 (Continued)

```
  COMMON SUMN, SUMAS, SUMLS, PR ,BIK                                    STA0061
1,NITER                                                                 STA0062
 COMMON BIKTE, BIKTH, DOE, DIE, SE,VE, BAROM, PO, SH, VH                STA0063
 COMMONHC1,HC2,CC1,CC2,PCR1,PCR2,PCE1,PCBH1,PCBH2,PCM1,PCM2,PMC1,       STA0064
1PMC2,SSC1,SSC2,EC1,EC2,VPC1,VPC2,EEC1,EEC2,BHC1,BHC2,OC1,OC2,SCM1,STA0065
2SCM2,TCO1,TCO2,TC1,TC2,HD,HBL,HPR,CAPF,AJ,XM,E,A3,A4,A5,A6,A7,A8,      STA0066
3 A9,PCE2,CAPI1,CAPI2,CIBC1,CIBC2      ,AP,CSUBP                        STA0067
 COMMONRH,RE   ,CPBT                                                    STA0068
 COMMON EBEL          ,XCR,RP                                           STA0069
 DIMENSION EBEL(100,6)                                                  STA0070
 COMMONDOR,DIR,BIKTR,SR,RSR,VR,TA,FF,HFE,HFR,HBH                        STA0071
1 ,CFMWZ,CFMWV,HS,HV,FFHL,SUMA,SMAQ,QLN   ,AE,AR,ELE,RLR,FNE,RNR        STA0072
2 ,XRP  ,UBARE,UBARR,RPN,SSF,SSF1                                       STA0073
 DIMENSIONCFMWZ(100),HS(100),CFMWV(100)                                 STA0074
1,FOUT(100),DHOUT(100)                                                  STA0075
 COMMONXTB,ORITE                                                        STA0076
 COMMONSITE,SITE1,SITE2,WAIT,WAIT1,WAIT2,ES,ES1,ES2,                    STA0077
1EA,EA1,EA2                                                             STA0078
 COMMON PO3,HS1,PMC,EEC,VPC,CIBC                                        STA0079
 COMMONACID,TNACDY,CLORIN,CAUSTC,DEFOM                                  STA0080
 COMMONACACID,FACID,WT,WTRAY,RESTM                                      STA0081
1     , AT,FE,FH,FR,H2,PO1,PO22,PO2,PSTA1,RHOE,RHOR,RHOH,CHRIS          STA0082
2,ROE                                                                   STA0083
 COMMONTP,A10,WCO,UTHE,ATHE,THEL,THEN,THEHT,    CTHE1,CTHE2,             STA0084
1CTHE3,PCTHE1,PCTHE2,THEK,THES,THER,SMALLR,THERC,THEFT,CTHE4,VTHE       STA0085
2    ,BOBH,FMOD,BOBDH,FOUT,DHOUT,FBOB1,FBOB2,FBOB3,FSTAR1,FSTAR2,       STA0086
3FSTAR3 ,BOBAC,BOBFA                                                    STA0087
 COMMON DEACST,DEA2,DEA1,DYEAR,DKGAL    ,RATEIN                         STA0088
1,WPL,CSLTUB                                                            STA0089
 COMMONVVEV,TRAYFL,WBS,TRAYWD,RESIDT,                                   STA0090
1TSTH,FREBD,AMODU,ALEV,TWFA,SPL,BDEPH,                                  STA0091
2CTA,HST   ,ESHELL,RSHELL ,CSLTBH,SMAPPP,SMAPPH   ,SSF2                 STA0092
 DIMENSIONVVEV(100),TRAYFL(100),WBS(100),                               STA0093
1TRAYWD(100),RESIDT(100)                                                STA0094
1,ALPHA(100)                                                            STA0095
 COMMON PV,A,ORHT,DELP,DENBR ,COEFA                                     STA0096
 DIMENSION PV(100),A(100),ORHT(100),DELP(100),DENBR(100)                STA0097
 COMMON REASIZ,REACST,TOELEC,TURCST,CAPI3,RETUB2,RETUB1,THERM           STA0098
 COMMON WPS,RS,WPIN,CBS,TBS,TOS,ANS,THS,WBE,WPE,E,IE, ALPHA             STA0099
1,SUMWP                                                                 STA0100
 COMMON CBE,RPE,TBE ,SSF1                                               STA0101
 DIMENSION WPS(25),RS(25),WPIN(25),CBS(25),TBS(25),TOS(25),ANS(25),STA0102
1THS(25)                                                                STA0103
 DIMENSION PODEL(25),HREC(25),POREC(25),WOS(25),WFS(25),HSUB(25),       STA0104
1 ELES(25),RLRS(25),WRS(25),HSIS(25)                                    STA0105
2 ,AES(25)   ,VOLMS(25),ARS(25)                                         STA0106
1,HLHS(25)                                                              STA0107
 COMMON ARS,ELES,HREC,HSIS,HSUP,PODEL,POREC,RLRS,VOLMS,                 STA0108
1WFS,WOS,WRS,AMBDAS,POCST1,POCST2,SUMLE,SUMLR,SUMPOR,SUMWR,WTME,        STA0109
2WTMR ,AES                                                              STA0110
1,HLHS                                                                  STA0111
 COMMONTOE, HDEL, POBLD,VOLM,HMKUP,POMKUP,WZZ,POPRD,AMSC1,AMSC2,        MAN0111
1CD,DEACS1,DEACS2,PMCFLO,PMCPO                                          MAN0112
 COMMON UDEAHP,UDEAWM,UINTAK,UNARAE,UNARAR,UNARHT,UNCHEM,               MAN0113
1UNDRVE,UNELCT,UNMAIN,UNMSCL,UNOPR,UNPIPE,UNPUMP,                       MAN0114
2UNSHHT,UNSITE,USHELN,VOLUME,WBLOW,WMAKUP,WPROD,WPUMP,WRECOV,WREJCTMAN0115
 DIMENSION PS(25),QS(25),TCFS(25)
 DIMENSION RHOKS(25),RHONKS(25),BAROMS(25),WCS(25),NKS(25),             MAN0121
1ENES(25),NNKS(25),RNRS(25),UES(25),URS(25)  ,WBSU(25)    ,UBARA(25)    MAN0122
```

FIGURE 8 (Continued)

```
      COMMON RHOKS,RHONKS,PS,QS,RPS,TCFS,BAROMS,WCS,NKS                 MAN0116
      COMMON ENES,NNKS,RNRS,UES,URS   ,WBSU ,USHELV,APLANT,ATOT,UBARA   MAN0117
      COMMON DTPD,CL                                                    MAN0118
      COMMON TOTALR
      COMMON CTUBEE,CETSE,CTUBER,CETSR,CITSE,CITSR,CDITS,CDETS
      DIMENSIONCTUBEE(25),CETSE(25),CTUBER(25),CETSR(25),CITSE(25),CITSR40250001
     1(25)
      COMMON UMAX, SUMDMA,  DTPDP, COSTDM
      COMMON UALP,DTPDPS
      COMMON AREADM,DPTDM,DTDM,CPROD,WIDDM
      DIMENSION AREADM(100),DPTDM(100),DTDM(100),CPROD(100),WIDDM(100)
     1,DTPDPS(100)  ,DTPDP(100),  SUMDMA(25)
      DIMENSION EINDM(100),WVST(100),            WPRODM(100),SMPRD(100),
     1WSALT(100),SMSALT(100)
      NTOTAL#NTOTAL
      SUMDMA(M)#0.0
      DTPDS# DTPD
      PI#3.14159                                                        STA0112
      IF(UMAX)450,451,450
  450 IF(UALP)452,451,452
  451 DO 453 I#1,NTOTAL
  453 DTPDPS(I)#DTPDP(I)
      RETURN
  452 DO 402 I#1,NTOTAL
      TSAVG  #(TS(I) + TS(I+1)) * 0.5
      TSAVE  #  TSAVG                    + 459.69
      CAVE#(C(I)+C(I+1))*0.5
      GDM   # WV(I)/ (AMODU *ALEV *SLS(I)*TRAYWD(I))
      II#4
      CALL DINTPL(TSAVG,CAVE,BPR)
      BIGTE#TSAVE-BPR
      PS   # EXPF(14.150119 - 6452.5621/ BIGTE  - 837533.21 /BIGTE**2)
      VG # 10.729 * TSAVE          /(18.015 *PS   )
      XDM   # GDM   **3* VG **2 *1.0E-8
      XDMLN # LOGF( XDM   )
      IF(XDMLN -4.4)  399, 400,400
  399 EINDM(I) # EXPF(8.941-0.1570*XDMLN)
      GOTO401
  400 EINDM(I)#  EXPF(4.42+0.870*XDMLN)
  401 XLDM #0.333
      EFFDM#1.0-100./(EINDM(I)*CAVE)
      IF(EFFDM)406,406,405
  406 EOUTMX#EINDM*CAVE
      AREADM(I)#0.0
      DPTDM(I)#0.0
      DTDM(I)#0.0
  407 WRITE OUTPUT TAPE 6,1407,I,EOUTMX
 1407 FORMAT(31H0NO DEMISTER REQUIRED, STAGE NO  I2, 25H MAX ENTRAINMENT#
     1 #        E13.6)
      GO TO 408
  405 II#5
      CALL DINTPL(TSAVG, CAVE, RHOY)
      VL# 1.0/RHOY
      XYORK # LOGF(EINDM(I) *1.0E-6  *(VL/VG) **0.5    )
      YYORK #  EXPF(  -4.99499 + (-0.725195 - 0.0301573 *XYORK) *XYORK)
      II# 7
      CALL DINTPL( TSAVG, CAVE,VIS)
      UPL # VIS/2.42
      UYORK #(YYORK * .67920928 *VG  / ( VL * UPL ** 0.2)) ** 0.5
```

FIGURE 8 (Continued)

```
      IF(UYORK-UMAX)1450,1451,1451
 1451 UYORK#UMAX
 1450 UDMIN#   UYORK
      AREADM(I) #  WV(I)* VG / (AMODU * ALEV * 3600.0 * UDMIN)
      ADMMAX#SLS(I)*TRAYWD(I)
      IF(AREADM(I)-ADMMAX)420,420,421
  421 WRITE OUTPUT TAPE 6,1421,I,AREADM(I),ADMMAX
 1421 FORMAT(42H0AREA DM IS GREATER THAN ADMMAX.  STAGE #    I8,
     12E16.8)
      AREADM(I)#ADMMAX
      UDMIN #WV(I)*VG/(AMODU*ALEV*3600.0*AREADM(I))
      ALPDM#0.666*LOGF(UDMIN )-0.656
      EOUTDM#EINDM(I) *EXPF(ALPDM*XLDM*(-1.0))
      COUTDM    #EOUTDM*CAVE
      EFFDM#1.0-EOUTDM/EINDM(I)
  420 SUMDMA(M)#SUMDMA(M)+AREADM(I)
      UG# 1.0E-5 *(0.122 + 1.001 E-3 * TSAVE + 2.892E-7 * TSAVE **2
     1-7.693 E-11 * TSAVE **3 )
      WIDDM(I)#AREADM(I)/SLS(I)
      ANRE DM #UDMIN /(46.0* VG * UG)
      FFDM    #EXPF( 0.450494)* ANREDM **(-0.2747)
      DPDDM    # FFDM    * XLDM *46.0 * UDMIN  **2  /  (4499.0824 * VG)
      XDPL #UDMIN/  SQRTF(VG/VL- 1.0)
      XLIQDM # WV(I) *EIN DM(I) *1.0E -6 / (ALEV * AMODU * AREADM(I))
      DPWDM   # 0.0361*(EXPF(.573379)* XDPL ** 2.6583 * XLIQDM ** 0.14847)
     17)
      DPTDM(I) # DPDDM    + DPWDM
      POUT DM #  PS   - DPTDM(I)
      TOUTDM#1675066.42/(-6452.5621 +SQRTF(41635557.+3353132.8*(14.150119
     19-LOGF(POUTDM    ))))   -459.69
      TSP   #1675066.42/(-6452.5621 +SQRTF(41635557.+3353132.8*(14.150119
     19-LOGF(PS        ))))   -459.69
      DTDM(I)# TSP   -TOUTDM
      DTPDPS(I)#DTPDP(I)
  408 DTPDP(I)# DTPDS + DTDM  (I)
      WVST(I)#WV(I)/(AMODU*ALEV)
      IF(UYORK-UALP)1453,1453,1452
 1452 ALPDM#0.666*LOGF(UALP)-0.656
      GO TO 1454
 1453 ALPDM#0.666*LOGF(UYORK)-0.656
 1454 EOUTDM#EINDM(I)*EXPF(-1.0*ALPDM*XLDM*12.0)
      COUTDM   #(EOUTDM*1.0E-6*CAVE)/(1.0+EOUTDM*1.0E-6)
      WPRODM(I)#WVST(I)*(1.0+EOUTDM*1.0E-6)
      IF(I-1)430,430,431
  430 SMPRD(I)#WPRODM(I)
      WSALT(I)#WPRODM(I)*COUTDM
      SMSALT(I)#WSALT(I)
      GO TO 432
  431 SMPRD(I)#SMPRD(I-1)+WPRODM(I)
      WSALT(I)#WPRODM(I)*COUTDM
      SMSALT(I)#SMSALT(I-1)+WSALT(I)
  432 CPROD(I)#SMSALT(I)/SMPRD(I)
  403 FORMAT(1H0I4,7E16.8)
  404 FORMAT(5X 7E16.8)
  402 CONTINUE
      I#0
  434 IF(CPROD(NTOTAL)-100.0E-6)        433,435,435
  433 I#I+1
      WPRSAV#WPRODM(I)
```

FIGURE 8 (Continued)

```
      WSALSV#WSALT(I)
      EOUTDM#EINDM(I)
      CNCSAV    #(C(I)+C(I+1))*0.5
      COUTDM      # EINDM (I) * 1.0E-6 * CNCSAV      / (1.0 +
     1 EINDM (I) * 1.0 E-6)
      WPRODM(I)#WVST(I)*(1.0+EOUTDM*1.0E-6)
      WSALT(I)#WPRODM(I)*COUTDM
      IF(I-1)436,436,437
  436 SMSALT(I)#WSALT(I)
      SMPRD  (I) # WPRODM (I)
      GO TO 438
  437 SMSALT(I)#SMSALT(I-1)+WSALT(I)
      SMPRD (I) # SMPRD (I-1) + WPRODM (I)
  438 CPROD(I)#SMSALT(I)/SMPRD(I)
      SMSALT(NTOTAL)#SMSALT(NTOTAL)     +WSALT(I)-WSALSV
      SMPRD(NTOTAL)#SMPRD(NTOTAL)       +WPRODM(I)-WPRSAV
      CPROD(NTOTAL)#SMSALT(NTOTAL)/SMPRD(NTOTAL)
      IF (CPROD (NTOTAL) - 100.E-6) 440, 440, 441
  441 WPRODM (I) # WPRSAV
      WSALT (I) # WSALSV
      DO 442 K # I, NTOTAL
      SMPRD (K) # SMPRD (K-1) + WPRODM (K)
      SMSALT (K) # SMSALT (K-1) + WSALT (K)
      CPROD (K) # SMSALT (K) / SMPRD (K)
      SUMDMA(M)#SUMDMA(M)+AREADM(K)
  442 CONTINUE
      GO TO 435
  440 DTDM(I)#0.0
      SUMDMA(M)#0.0
      AREADM(I)#0.0
      DPTDM(I)#0.0
      DTDM(I)#0.0
      DTPDP(I)#DTPDS
      IF(I-NTOTAL) 433,435,435
  435 COSTDM # SUMDMA * 10.5   *ALEV*AMODU
     1*XLDM/0.25
  102 RETURN                                                        STA0315
      END                                                           STA0316
```

FIGURE 8 (Continued)

```
*     LABEL                                                              POW0001
      SUBROUTINE POWERU(M)                                               POW0002
      GTV2F(TVZ)                                                         POW0003
     1     #2.1786818-0.70443622E-1*TVZ     +0.93941286E-3*TVZ     **2   POW0004
     2-0.53958083E-5 *TVZ     **3 +0.18139197E-7*TVZ     **4             POW0005
      SMALLFF(D,V)#(.0056+0.02436/(D*V)**0.32)*SSF                       POW0006
      COMMON X,Y,W                                                       POW0007
      COMMON DATANO                                                      POW0008
      DIMENSIONX(150,4),Y(150)                                           POW0009
      EQUIVALENCE(II,II)                                                 POW0010
      EQUIVALENCE        (Y(1),CR),       (Y(2),RP),       (Y(3),HC1),   POW0011
     1(Y(4),CC1),        (Y(5),PCR1),     (Y(6),PCE1),     (Y(7),PCBH1),  POW0012
     2(Y(8),PCM1),       (Y(9),PMC1),     (Y(10),SITE1),   (Y(11),WAIT1), POW0013
     3(Y(12),ES1),       (Y(13),EA1),     (Y(14),BHC1),    (Y(15),VPC1),  POW0014
     4(Y(16),EEC1),      (Y(17),OC1),     (Y(18),SCM1),    (Y(19),CIBC1), POW0015
     5(Y(20),DEA1),      (Y(21),TC1)                                     POW0016
      EQUIVALENCE        (Y(25),G),       (Y(26),TOTAL),   (Y(27),TSTEAM), POW0017
     1(Y(28),THF),       (Y(29),TO),      (Y(30),TA),      (Y(31),CO),   POW0018
     2(Y(32),CP),                         (Y(34),P),                     POW0019
     3(Y(36),Q)                                                          POW0020
      EQUIVALENCE        (Y(40),FFHL),    (Y(41),CAPF),    (Y(42),SMALLE), POW0021
     1(Y(43),HD),        (Y(44),HR),      (Y(45),HE),      (Y(46),HH),   POW0022
     2(Y(47),HBL),       (Y(48),HPR),     (Y(49),SMALLD),  (Y(50),SMALLB), POW0023
     3(Y(51),SMALLP),    (Y(52),SMAPPP),  (Y(53),SMAPPH),  (Y(54),SMA1),  POW0024
     4(Y(55),SMA2),      (Y(56),A3),      (Y(57),A4),      (Y(58),RATEIN), POW0025
     5(Y(59),TP)                                                         POW0026
      EQUIVALENCE        (Y(75),PN),      (Y(76),RPN),     (Y(77),ALPBAR), POW0027
     1(Y(78),BAROM),     (Y(79),TB),      (Y(80),TCF),     (Y(81),AMBN),  POW0028
     2(Y(82),CSUBP),     (Y(83),ACPSN),   (Y(84),ACPTNK),  (Y(85),UBPH),  POW0029
     3(Y(86),PO),        (Y(87),WX),      (Y(88),WR),      (Y(89),WC),   POW0030
     4(Y(90),WB),        (Y(91),WY)                                      POW0031
      EQUIVALENCE        (Y(100),SH),     (Y(101),SE),     (Y(102),SR),  POW0032
     1(Y(103),BIKTH),    (Y(104),BIKTE),  (Y(105),BIKTR),  (Y(106),VH),  POW0033
     2(Y(107),VE),       (Y(108),VR),     (Y(109),DOH),    (Y(110),DOE),  POW0034
     3(Y(111),DOR),      (Y(112),DIH),    (Y(113),DIE),    (Y(114),DIR),  POW0035
     4(Y(115),RH),       (Y(116),RE),     (Y(117),RSR),    (Y(118),RHONK), POW0036
     5(Y(119),RHOK),     (Y(120),WF),                      (Y(122),WO),   POW0037
     6(Y(123),NK),       (Y(124),NNK),    (Y(125),UBARH),  (Y(126),UBARE), POW0038
     7(Y(127),UBARR),     (Y(128),AH),     (Y(129),AE),     (Y(130),AR),  POW0039
     8(Y(131),HLH),      (Y(132),ELE),    (Y(133),RLR),    (Y(134),HN),  POW0040
     9(Y(135),ENE),(Y(136),RNR),(Y(137),HBH),(Y(138),HFE),(Y(139),HFR)   POW0041
      COMMONNTOTAL,TS,THF,TO,CO,CP,CR,V,G,SMAPP,SMALLD,SMALLE,DO,DI,     POW0042
     1H,SMALLB,SMALLP,SMA1,SMA2,P,Q,ERR,II,JJ,KK                         POW0043
      COMMON HP,CT,C,QH,SMT,TTABLE,TTD,TV,WP,WS,WV                       POW0044
      COMMON DELST,DELCT,CB,RHO,SUMQH,TB,TCF,TK,TOTAL,T,WB,WC,WF,WO,    POW0045
     1WPN,WR,AMBDA                                                       POW0046
       COMMON AS ,SLS, UBAR, OM , HO, HI, TVTT, Z                        POW0047
      COMMON TAU,CCF,NK,PNK,RHOK,RHONK,ALPHA1,ACPTNK,CPTNK,              POW0048
     1ACPSN,CPTK,ACPSNK,RHONK                                            POW0049
      DIMENSION TTABLE(20),WS(100),TS(100),C(100),WP(100),TV(100),HP(100POW0050
     1),CT(100),TTD(100), SMT(100)                                       POW0051
      DIMENSION WV(100),QH(100)  ,CFM(100 )                              POW0052
      DIMENSIONAS(100),SLS(100),        UBAR(100),OM(100),HO(100),       POW0053
     1TVTT(100),Z(100),HI(100)                                           POW0054
      COMMON CPSNK, AMBN, AMBNK, HFG, CPT, CI, ALPBAR, SMT2              POW0055
     1,R,S,HR,HE,HH    ,PI                                               POW0056
      COMMON CFM,  HC,EC,CPSN,CC,                                        POW0057
     1       A1,A2,PCD,PCPMC,PCPR,PN,WIDTH,      SUM21,                  POW0058
     2SUM22,SUM24,SUM26,SUMALP,TC,TSTEAM,WPNK  ,WX,WY                    POW0059
```

FIGURE 8 (Continued)

```
 DIMENSION SMT2(100)                                                    POW0060
 COMMON DIH, DOH, AIH,A2H                                               POW0061
1 ,   HLH, BHC, AH, PCH,UBARH, UBPH, HN, NH                             POW0062
  COMMON SUMN, SUMAS, SUMLS, PR ,BIK                                    POW0063
1,NITER                                                                 POW0064
 COMMON BIKTE, BIKTH, DOE, DIE, SE,VE, BAROM, PO, SH, VH                POW0065
 COMMONHC1,HC2,CC1,CC2,PCR1,PCR2,PCE1,PCBH1,PCBH2,PCM1,PCM2,PMC1,       POW0066
1PMC2,SSC1,SSC2,EC1,EC2,VPC1,VPC2,EEC1,EEC2,BHC1,BHC2,OC1,OC2,SCM1,POW0067
2SCM2,TCO1,TCO2,TC1,TC2,HD,HBL,HPR,CAPF,AJ,XM,E,A3,A4,A5,A6,A7,A8,      POW0068
3 A9,PCE2,CAPI1,CAPI2,CIBC1,CIBC2      ,AP,CSUBP                        POW0069
 COMMONRH,RE   ,CPBT                                                    POW0070
 COMMON EBEL          ,XCR,RP                                           POW0071
 DIMENSION EBEL(100,6)                                                  POW0072
 COMMONDOR,DIR,BIKTR,SR,RSR,VR,TA,FF,HFE,HFR,HBH                        POW0073
1 ,CFMWZ,CFMWV,HS,HV,FFHL,SUMA,SMAQ,GLN   ,AE,AR,ELE,RLR,ENE,RNR        POW0074
2 ,XRP  ,UBARE,UBARR,RPN,SSF,SSF1                                       POW0075
 DIMENSIONCFMWZ(100),HS(100),CFMWV(100)                                 POW0076
1,FOUT(100),DHOUT(100)                                                  POW0077
 COMMONXTB,ORITE                                                        POW0078
 COMMONSITE,SITE1,SITE2,WAIT,WAIT1,WAIT2,ES,ES1,ES2,                    POW0079
1EA,EA1,EA2                                                             POW0080
 COMMON PO3,HS1,PMC,EEC,VPC,CIBC                                        POW0081
 COMMONACID,TNACDY,CLORIN,CAUSTC,DEFOM                                  POW0082
 COMMONACACID,FACID,WT,WTRAY,RESTM                                      POW0083
1     , AT,FE,FH,FR,H2,PO1,PO22,PO2,PSTA1,RHOE,RHOR,RHOH,CHRIS          POW0084
2,ROE                                                                   POW0085
 COMMONTP,AIO,WCO,UTHE,ATHE,THEL,THEN,THEHT,    CTHE1,CTHE2,            POW0086
1CTHE3,PCTHE1,PCTHE2,THEK,THES,THER,SMALLR,THERC,THEFT,CTHE4,VTHE       POW0087
2    ,BOBH,FMOD,BOBDH,FOUT,DHOUT,FBOB1,FBOB2,FBOB3,FSTAR1,FSTAR2,       POW0088
3FSTAR3  ,BOBAC,BOBFA                                                   POW0089
 COMMON DEACST,DEA2,DEA1,DYEAR,DKGAL    ,RATEIN                         POW0090
1,WPL,CSLTBP                                                            POW0091
 COMMONVVEV,TRAYFL,WBS,TRAYWD,RESIDT,                                   POW0092
1TSTH,FREBD,AMODU,ALEV,TWFA,SPL,BDEPH,                                  POW0093
2CTA,HST   ,ESHELL,RSHELL  ,CSLTBH,SMAPPP,SMAPPH   ,SSF2                POW0094
 DIMENSIONVVEV(100),TRAYFL(100),WBS(100),                               POW0095
1TRAYWD(100),RESIDT(100)                                                POW0096
1,ALPHA(100)                                                            POW0097
 COMMON PV,A,ORHT,DELP,DENBR  ,COEFA                                    POW0098
 DIMENSION PV(100),A(100),ORHT(100),DELP(100),DENBR(100)                POW0099
 COMMON REASIZ,REACST,TOELEC,TURCST,CAPI3,RETUB2,RETUB1,THERM           POW0100
 COMMON WPS,RS,WPIN,CBS,TBS,TOS,ANS,THS,WBE,WPE,E,IE, ALPHA             POW0101
1,SUMWP                                                                 POW0102
 COMMON CBE,RPE,TBE  ,SSF1                                              POW0103
 DIMENSION WPS(25),RS(25),WPIN(25),CBS(25),TBS(25),TOS(25),ANS(25),POW0104
1THS(25)                                                                POW0105
 DIMENSION PODEL(25),HREC(25),POREC(25),WOS(25),WFS(25),HSUB(25),       POW0106
1 ELES(25),RLRS(25),WRS(25),HSIS(25)                                    POW0107
2 ,AES(25)   ,VOLMS(25),ARS(25)                                         POW0108
1,HLHS(25)                                                              POW0109
 COMMON ARS,ELES,HREC,HSIS,HSUB,PODEL,POREC,RLRS,VOLMS,                 POW0110
1WFS,WOS,WRS,AMBDAS,POCST1,POCST2,SUMLE,SUMLR,SUMPOR,SUMWR,WTME,        POW0111
2WTMR  ,AES                                                             POW0112
1,HLHS                                                                  POW0113
 COMMONTOE, HDEL, POBLD,VOLM,HMKUP,POMKUP,WZZ,POPRD,AMSC1,AMSC2,        POW0114
1CD,DEACS1,DEACS2,PMCFLO,PMCPO                                          POW0115
 COMMON UDEAHP,UDEAWM,UINTAK,UNARAE,UNARAR,UNARHT,UNCHEM,               POW0116
1UNDRVE,UNELCT,UNMAIN,UNMSCL,UNOPR,UNPIPE,UNPUMP,                       POW0117
2UNSHHT,UNSITE,USHELN,VOLUME,WBLOW,WMAKUP,WPROD,WPUMP,WRECOV,WREJCTPOW0118
```

FIGURE 8 (Continued)

```
      DIMENSION PS(25),QS(25),TCFS(25)                                  POW0119
      DIMENSION RHOKS(25),RHONKS(25),BAROMS(25),WCS(25),NKS(25),        POW0120
     1ENES(25),NNKS(25),RNRS(25),UES(25),URS(25)  ,WBSU(25)    ,UBARA(25) POW0121
      COMMON RHOKS,RHONKS,PS,QS,RPS,TCFS,BAROMS,WCS,NKS                 POW0122
      COMMON ENES,NNKS,RNRS,UES,URS   ,WBSU ,USHELV,APLANT,ATOT,UBARA   POW0123
      COMMON DTPD,CL                                                    POW0124
      COMMON TOTALR
      COMMON CTUBEE,CETSE,CTUBER,CETSR,CITSE,CITSR,CDITS,CDETS
      DIMENSIONCTUBEE(25),CETSE(25),CTUBER(25),CETSR(25),CITSE(25),CITSR40250001
     1(25)                                                              40250003
C$******YORK TYPE DEMISTER
      COMMON UMAX, SUMDMA,  DTPDP, COSTDM
      COMMON UALP,DTPDPS
      COMMON AREADM,DPTDM,DTDM,CPROD,WIDDM
      DIMENSION AREADM(100),DPTDM(100),DTDM(100),CPROD(100),WIDDM(100)
     1,DTPDPS(100)   ,DTPDP(100),  SUMDMA(25)
C     HEADS AND POWER                                                   POW0125
C                                                                       POW0126
      PI#3.14159                                                        POW0129
      HOG#1.0                                                           POW0130
      CALL SMAP(WPL,CSLTBP,RATEIN,SMAPPP)                               POW0131
      CALL SMAP(WPL,CSLTBH,RATEIN,SMAPPH)                               POW0132
C     COSTS                                                             POW0135
      SUBA2#0.0                                                         POW0136
      SUBA1#0.0                                                         POW0137
      SUMAS1#0.0                                                        POW0138
      HFE#0.0                                                           POW0139
      HFR#0.0                                                           POW0140
      AE#0.0                                                            POW0141
      AR#0.0                                                            POW0142
      ELE#0.0                                                           POW0143
      RLR#0.0                                                           POW0144
      ENE#0.0                                                           POW0145
      RNR#0.0                                                           POW0146
      TSTEM#TSTEAM                                                      POW0147
      GF#G*CAPF                                                         POW0148
      AMBDAS#1093.88-0.5703*TSTEM+1.2819E-4*TSTEM**2-0.8824E-6*TSTEM**3 POW0149
      SUMAS#0.0                                                         POW0150
      J#NK+1                                                            POW0151
      DO960I#J,NTOTAL                                                   POW0152
      HFR#HFR+HS(I)                                                     POW0153
      RLR#RLR+SLS(I)                                                    POW0154
      RNR#RNR+Z(I)                                                      POW0155
  120 SUBA2#SUBA2+UBAR(I)*AS(I)                                         POW0156
  960 SUMAS#SUMAS+AS(I)                                                 POW0159
      DO961I#1,NK                                                       POW0160
      HFE#HFE+HS(I)                                                     POW0161
      ELE#ELE+SLS(I)                                                    POW0162
      ENE#ENE+Z(I)                                                      POW0163
      SUBA1#SUBA1+UBAR(I)*AS(I)                                         POW0164
  961 SUMAS1#SUMAS1+AS(I)                                               POW0167
      SUBAS#SUBA1+SUBA2                                                 POW0168
      UBARE#SUBA1/SUMAS1                                                POW0169
      UBARR#SUBA2/SUMAS                                                 POW0170
      ZNK#NK                                                            POW0171
      RNR#RNR/(TOTAL-ZNK)                                               POW0172
      ENE#ENE/ZNK                                                       POW0173
      ELE#ELE+FLOATF(NK-1)*TSTH/12.0                                    POW0174
      AE#PI*DOE*ELE*ENE/12.0                                            POW0175
```

FIGURE 8 (Continued)

```
      RASB#FLOATF(NTOTAL-NK-1)*TSTH/12.0                                POW0176
      RLR#RLR+RASB                                                      POW0177
      IF(M-IE)501,502,501
501   DO#DOE
      GOTO503
502   DO#DOR
503   CONTINUE
      AR#PI*DO *RLR*RNR/12.0                                            POW0178
      ESHELL#(CTA*PI*DOE**2*ENE*ELE)                                    POW0179
     1/(576.0*AMODU)+HST*ALEV*WTME*ELE                                  POW0180
      RSHELL#(CTA*PI*DO **2*RNR*RLR)                                    POW0181
     1/(576.0*AMODU)+HST*ALEV*WTMR*RLR                                  POW0182
      VOLM#ESHELL+RSHELL                                                POW0183
      RLRS(M)#RLR                                                       POW0184
      ELES(M)#ELE                                                       POW0185
      AES(M)#AE                                                         POW0186
      WBSU(M)#WB                                                        POW0187
      ARS(M)#AR                                                         POW0188
      VOLMS(M)#VOLM                                                     POW0189
      HLHS(M)#HLH                                                       POW0190
      GTV21#GTV2F(TV(2))                                                POW0191
      GTV2N#GTV2F(TV(NTOTAL+1))                                         POW0192
      HS1#2.3*(GTV21-GTV2N)                                             POW0193
      HS1S(M)#HS1                                                       POW0194
      WFS(M)#WF                                                         POW0195
      RHOKS(M)#RHOK                                                     POW0196
      RHONKS(M)#RHONK                                                   POW0197
      BAROMS(M)#BAROM                                                   POW0198
      WCS(M)#WC                                                         POW0199
      NKS(M)#NK                                                         POW0200
      ENES(M)#ENE                                                       POW0201
      NNKS(M)#NTOTAL-NK                                                 POW0202
      RNRS(M)#RNR                                                       POW0203
      UES(M)#UBARE                                                      POW0204
      URS(M)#UBARR                                                      POW0205
      UBARA(M)#SUBAS/(SUMAS+SUMAS1)                                     POW0206
      QS(M)#Q                                                           POW0207
      PS(M)#P                                                           POW0208
      TCFS(M)#TCF                                                       POW0209
C     SURFACE AREA COST                                                 40250021
      IF(M-IE)256,257,256                                               40250022
  256 CTUBER(M)#AR*SMA1                                                 40250023
      GOTO258                                                           40250024
  257 CTUBER(M)#AR*SMA2                                                 40250025
  258 CONTINUE                                                          40250001
      IF(DOE-1.0)250,251,251                                            40250006
  250 ENITSE#NK                                                         40250008
      GOTO252                                                           40250010
251   ENITSE#2.*FLOATF(NK)-1.
252   IF(DO -1.)253,254,254
253   ENITSR#NNKS(M)
      GOTO255
254   ENITSR#2.0*FLOATF(NNK) -1.
255   CONTINUE
      ALEMO#ALEV*AMODU
      ALEMO2#2.0*ALEMO                                                  40250024
C     TUBE SHEET AREA
      APTSE#3.8191*DOE**2*ENE/(288.*ALEMO)+3.*HST
C     INTERMEDIATE TUBE SHEET COST
```

FIGURE 8 (Continued)

```
      CITSE(M)#2.*ALEMO*ENITSE*(APTSE*7.343+ENE*CDITS/(2.*ALEMO))
C     END TUBE SHEET COST
      CETSE(M)#4.0*ALEMO*(APTSE*44.772+ENE*CDETS/(2.0*ALEMO))          40250020
C     SURFACE AREA COST                                                40250001
      CTUBEE(M)#AE*SMAI                                                40250003
C     REJECT SECTION                                                   40250001
C     TUBE SHEET AREA                                                  40250003
      APTSR#3.8191*DO**2*RNR/(288.0*ALEMO)+3.0*HST                        40250
C     INTERMEDIATE TUBE SHEET COST                                     40250013
      CITSR(M)#ALEMO2*ENITSR*(APTSR*7.343+RNR*CDITS/ALEMO2)            40250011
C     END TUBE SHEET COST                                              40250015
      CETSR(M)#4.0*ALEMO*(APTSR*44.772+RNR*CDETS/ALEMO2)               40250017
      RETURN                                                           POW0210
      END                                                              POW0211
```

FIGURE 8 (Continued)

```
*     LABEL                                                             STA0001
C     STAGEGEOM                                                         STA0002
      SUBROUTINESTAGEG (M)                                              STA0003
C     STAGE-GEOMETRY-CALCULATIONS REVISIONS 4-21-64                     STA0004
      COMMON X,Y,W                                                      STA0005
      COMMON DATANO                                                     STA0006
      DIMENSIONX(150,4),Y(150)                                          STA0007
      EQUIVALENCE(II,II)                                                STA0008
      EQUIVALENCE        (Y(1),CR),       (Y(2),RP),       (Y(3),HC1),  STA0009
     1(Y(4),CC1),        (Y(5),PCR1),     (Y(6),PCE1),     (Y(7),PCBH1), STA0010
     2(Y(8),PCM1),       (Y(9),PMC1),     (Y(10),SITE1),   (Y(11),WAIT1), STA0011
     3(Y(12),ES1),       (Y(13),EA1),     (Y(14),BHC1),    (Y(15),VPC1), STA0012
     4(Y(16),EEC1),      (Y(17),OC1),     (Y(18),SCM1),    (Y(19),CIBC1), STA0013
     5(Y(20),DEA1),      (Y(21),TC1)                                    STA0014
      EQUIVALENCE        (Y(25),G),       (Y(26),TOTAL),   (Y(27),TSTEAM), STA0015
     1(Y(28),THF),       (Y(29),TO),      (Y(30),TA),      (Y(31),CO),  STA0016
     2(Y(32),CP),                         (Y(34),P),                    STA0017
     3(Y(36),Q)                                                         STA0018
      EQUIVALENCE        (Y(40),FFHL),    (Y(41),CAPF),    (Y(42),SMALLE), STA0019
     1(Y(43),HD),        (Y(44),HR),      (Y(45),HE),      (Y(46),HH),  STA0020
     2(Y(47),HBL),       (Y(48),HPR),     (Y(49),SMALLD),(Y(50),SMALLB), STA0021
     3(Y(51),SMALLP),    (Y(52),SMAPPP),  (Y(53),SMAPPH),(Y(54),SMA1),  STA0022
     4(Y(55),SMA2),      (Y(56),A3),      (Y(57),A4),      (Y(58),RATEIN), STA0023
     5(Y(59),TP)                                                        STA0024
      EQUIVALENCE        (Y(75),PN),      (Y(76),RPN),     (Y(77),ALPBAR), STA0025
     1(Y(78),BAROM),     (Y(79),TB),      (Y(80),TCF),     (Y(81),AMBN), STA0026
     2(Y(82),CSUBP),     (Y(83),ACPSN),   (Y(84),ACPTNK),(Y(85),UBPH),  STA0027
     3(Y(86),PO),        (Y(87),WX),      (Y(88),WR),      (Y(89),WC),  STA0028
     4(Y(90),WB),        (Y(91),WY)                                     STA0029
      EQUIVALENCE        (Y(100),SH),     (Y(101),SE),     (Y(102),SR), STA0030
     1(Y(103),BIKTH),    (Y(104),BIKTE),  (Y(105),BIKTR),(Y(106),VH),   STA0031
     2(Y(107),VE),       (Y(108),VR),     (Y(109),DCH),    (Y(110),DOE), STA0032
     3(Y(111),DOR),      (Y(112),DIH),    (Y(113),DIE),    (Y(114),DIR), STA0033
     4(Y(115),RH),       (Y(116),RE),     (Y(117),RSR),    (Y(118),RHONK), STA0034
     5(Y(119),RHOK),     (Y(120),WF),                      (Y(122),WO),  STA0035
     6(Y(123),NK),       (Y(124),NNK),    (Y(125),UBARH),(Y(126),UBARE), STA0036
     7(Y(127),UBARR),     (Y(128),AH),     (Y(129),AE),     (Y(130),AR), STA0037
     8(Y(131),HLH),      (Y(132),ELE),    (Y(133),RLR),    (Y(134),HN), STA0038
     9(Y(135),ENE),(Y(136),RNR),(Y(137),HBH),(Y(138),HFE),(Y(139),HFR) STA0039
      COMMONNTOTAL,TS,THF,TO,CO,CP,CR,V,G,EL,SMALLD,SMALLE,DO,DI,       STA0040
     1H,SMALLB,SMALLP,SMA1,SMA2,P,Q,ERR,II,JJ,KK                        STA0041
      COMMON HP,CT,C,QH,SMT,TTABLE,TTD,TV,WP,WS,WV                      STA0042
      COMMON DELST,DELCT,CB,RHO,SUMQH,TB,TCF,TK,TOTAL,T,WB,WC,WF,WO,    STA0043
     1WPN,WR,AMBDA                                                      STA0044
       COMMON AS ,SLS, UBAR, OM , HO, HI, TVTT, Z                       STA0045
      COMMON TAU,CCF,NK,PNK,RHOK,RHONK,ALPHA1,ACPTNK,CPTNK,             STA0046
     1ACPSN,CPTK,ACPSNK,RHONK                                           STA0047
      DIMENSION TTABLE(20),WS(100),TS(100),C(100),WP(100),TV(100),HP(100STA0048
     1),CT(100),TTD(100), SMT(100)                                      STA0049
      DIMENSION WV(100),QH(100)   ,CFM(100 )                            STA0050
      DIMENSIONAS(100),SLS(100),        UBAR(100),OM(100),HO(100),      STA0051
     1TVTT(100),Z(100),HI(100)                                          STA0052
      COMMON CPSNK, AMBN, AMBNK, HFG, CPT, CI, ALPBAR, SMT2             STA0053
     1,R,S,HR,HE,HH    ,PI                                              STA0054
      COMMON CFM,  HC,EC,CPSN,CC,                                       STA0055
     1       A1,A2,PCD,PCPMC,PCPR,PN,WIDTH,      SUM21,                 STA0056
     2SUM22,SUM24,SUM26,SUMALP,TC,TSTEAM,WPNK   ,WX,WY                  STA0057
      DIMENSION SMT2(100)                                               STA0058
      COMMON DIH, DOH, A1H,A2H                                          STA0059
```

FIGURE 8 (Continued)

```
1 ,   HLH, BHC, AH, PCH,UBARH, UBPH, HN, NH                          STA0060
  COMMON SUMN, SUMAS, SUMLS, PR ,BIK                                 STA0061
1,NITER                                                              STA0062
 COMMON BIKTE, BIKTH, DOE, DIE, SE,VE, BAROM, PO, SH, VH             STA0063
 COMMONHC1,HC2,CC1,CC2,PCR1,PCR2,PCE1,PCBH1,PCBH2,PCM1,PCM2,PMC1,    STA0064
1PMC2,SSC1,SSC2,EC1,EC2,VPC1,VPC2,EEC1,EEC2,BHC1,BHC2,OC1,OC2,SCM1,STA0065
2SCM2,TCO1,TCO2,TC1,TC2,HD,HBL,HPR,CAPF,AJ,XM,E,A3,A4,A5,A6,A7,A8,  STA0066
3 A9,PCE2,CAPI1,CAPI2,CIBC1,CIBC2      ,AP,CSUBP                     STA0067
 COMMONRH,RE   ,CPBT                                                 STA0068
 COMMON EBEL          ,XCR,RP                                        STA0069
 DIMENSION EBEL(100,6)                                               STA0070
 COMMONDOR,DIR,BIKTR,SR,RSR,VR,TA,FF,HFE,HFR,HBH                     STA0071
1 ,CFMWZ,CFMWV,HS,HV,FFHL,SUMA,SMAQ,QLN   ,AE,AR,ELE,RLR,ENE,RNR     STA0072
2 ,XRP  ,UBARE,UBARR,RPN,SSF,SSF1                                    STA0073
 DIMENSIONCFMWZ(100),HS(100),CFMWV(100)                              STA0074
1,FOUT(100),DHOUT(100)                                               STA0075
 COMMONXTB,ORITE                                                     STA0076
 COMMONSITE,SITE1,SITE2,WAIT,WAIT1,WAIT2,ES,ES1,ES2,                 STA0077
1EA,EA1,EA2                                                          STA0078
 COMMON PO3,HS1,PMC,EEC,VPC,CIBC                                     STA0079
 COMMONACID,TNACDY,CLORIN,CAUSTC,DEFOM                               STA0080
 COMMONACACID,FACID,WT,WTRAY,RESTM                                   STA0081
1     , AT,FE,FH,FR,H2,PO1,PO22,PO2,PSTA1,RHOE,RHOR,RHOH,CHRIS       STA0082
2,ROE                                                                STA0083
 COMMONTP,A10,WCO,UTHE,ATHE,THEL,THEN,THEHT,    CTHE1,CTHE2,         STA0084
1CTHE3,PCTHE1,PCTHE2,THEK,THES,THER,SMALLR,THERC,THEFT,CTHE4,VTHE    STA0085
2    ,BOBH,FMOD,BOBDH,FOUT,DHOUT,FBOB1,FBOB2,FBOB3,FSTAR1,FSTAR2,    STA0086
3FSTAR3 ,BOBAC,BOBFA                                                 STA0087
 COMMON DEACST,DEA2,DEA1,DYEAR,DKGAL    ,RATEIN                      STA0088
1,WPL,CSLTUB                                                         STA0089
 COMMONVVEV,TRAYFL,WBS,TRAYWD,RESIDT,                                STA0090
1TSTH,FREBD,AMODU,ALEV,TWFA,SPL,BDEPH,                               STA0091
2CTA,HST   ,ESHELL,RSHELL ,CSLTBH,SMAPPP,SMAPPH   ,SSF2              STA0092
 DIMENSIONVVEV(100),TRAYFL(100),WBS(100),                            STA0093
1TRAYWD(100),RESIDT(100)                                             STA0094
1,ALPHA(100)                                                         STA0095
 COMMON PV,A,ORHT,DELP,DENBR ,COEFA                                  STA0096
 DIMENSION PV(100),A(100),ORHT(100),DELP(100),DENBR(100)             STA0097
 COMMON REASIZ,REACST,TOELEC,TURCST,CAPI3,RETUB2,RETUB1,THERM        STA0098
 COMMON WPS,RS,WPIN,CBS,TBS,TOS,ANS,THS,WBE,WPE,E,IE, ALPHA          STA0099
1,SUMWP                                                              STA0100
 COMMON CBE,RPE,TBE ,SSF1                                            STA0101
 DIMENSION WPS(25),RS(25),WPIN(25),CBS(25),TBS(25),TOS(25),ANS(25),STA0102
1THS(25)                                                             STA0103
 DIMENSION PODEL(25),HREC(25),POREC(25),WOS(25),WFS(25),HSUB(25),    STA0104
1 ELES(25),RLRS(25),WRS(25),HS1S(25)                                 STA0105
2 ,AES(25)   ,VOLMS(25),ARS(25)                                      STA0106
1,HLHS(25)                                                           STA0107
 COMMON ARS,ELES,HREC,HS1S,HSUB,PODEL,POREC,RLRS,VOLMS,              STA0108
1WFS,WOS,WRS,AMBDAS,POCST1,POCST2,SUMLE,SUMLR,SUMPOR,SUMWR,WTME,     STA0109
2WTMR ,AES                                                           STA0110
1,HLHS                                                               STA0111
 COMMONTOE, HDEL, POBLD,VOLM,HMKUP,POMKUP,WZZ,POPRD,AMSC1,AMSC2,     TCV0108
1CD,DEACS1,DEACS2,PMCFLO,PMCPO                                       TCV0109
 COMMON UDEAHP,UDEAWM,UINTAK,UNARAE,UNARAR,UNARHT,UNCHEM,            TCV0110
1UNDRVE,UNELCT,UNMAIN,UNMSCL,UNOPR,UNPIPE,UNPUMP,                    TCV0111
2UNSHHT,UNSITE,USHELN,VOLUME,WBLOW,WMAKUP,WPROD,WPUMP,WRECOV,WREJCTTCV0112
 DIMENSION PS(25),QS(25),TCFS(25)                                    TCV0113
 DIMENSION RHOKS(25),RHONKS(25),BAROMS(25),WCS(25),NKS(25),          TCV0114
```

FIGURE 8 (Continued)

```
     1ENES(25),NNKS(25),RNRS(25),UES(25),URS(25) ,WBSU(25)    ,UBARA(25) TCV0115
      COMMON RHOKS,RHONKS,PS,QS,RPS,TCFS,BAROMS,WCS,NKS                   TCV0116
      COMMON ENES,NNKS,RNRS,UES,URS   ,WBSU  ,USHELV,APLANT,ATOT,UBARA    TCV0117
      COMMON DTPD,CL                                                      TCV0118
      COMMON TOTALR
      COMMON CTUBEE,CETSE,CTUBER,CETSR,CITSE,CITSR,CDITS,CDETS
      DIMENSIONCTUBEE(25),CETSE(25),CTUBER(25),CETSR(25),CITSE(25),CITSR40250001
     1(25)                                                                40250003
C$******YORK TYPE DEMISTER
      COMMON UMAX, SUMDMA,  DTPDP, COSTDM
      COMMON UALP,DTPDPS
      COMMON AREADM,DPTDM,DTDM,CPROD,WIDDM
      DIMENSION AREADM(100),DPTDM(100),DTDM(100),CPROD(100),WIDDM(100)
     1,DTPDPS(100)   ,DTPDP(100),  SUMDMA(25)
      COMMON YDTPD
      DIMENSION YDTPD(8,100)
      COMMONDPREQ
      DIMENSION DPREQ(100)
      PI#3.14159                                                          STA0112
      CTA#6.65                                                            STA0113
      SUMLS#0.                                                            STA0114
      ZBAR#0.                                                             STA0115
      SUMOM#0.0                                                           STA0116
      TER5#1.0+SSF1                                                       STA0117
      II#5                                                                STA0118
      CALLDINTPL(TCF,CT(1),RHOE1)                                         STA0119
      DIMENSION GE(25)                                                    STA0120
      GE(M)#3600.*RHOE1*VE                                                STA0121
      IF(M-IE)130,31,130                                                  STA0122
   31 CALLDINTPL(TB,CO,RHOR1)                                             STA0123
      GR#3600.*RHOR1*VR                                                   STA0124
      GO TO 32                                                            STA0125
  130 GR#GE(M+1)                                                          STA0126
   32 DO121 I#1,NTOTAL                                                    STA0127
      IF(M-IE)260,261,260
260   IF(I-NK)262,262,263
262   RHJ#RHONK
      GF#GE(M)
      GOTO264
263   RHJ#RHOK
      GF#GR
264   DO#DOE
      DI#DIE
      BIKT#BIKTE
      IF(M-1)321,318,321
  318 IF (I-6)320,321,321
  320 R # .0010 - .00014 * FLOATF (I-1)
      GO TO 319
  321 R#RE
  319 S#SE                                                                STA0134
      V#VE
      GOTO12
261   IF(I-NK)10,10,11
   10 DO#DOE                                                              STA0129
      RHJ#RHONK                                                           STA0130
      DI#DIE                                                              STA0131
      BIKT#BIKTE                                                          STA0132
      IF(M-1)221,219,221
  219 IF (I-6)220,221,221
```

FIGURE 8 (Continued)

```
220 R # .0010 - .00014 * FLOATF (I-1)
    GO TO 19
221 R#RE                                                                STA0133
 19 S#SE                                                                STA0134
    V#VE                                                                STA0135
    GF#GE (M)                                                           STA0136
    GOTO12                                                              STA0137
 11 DO#DOR                                                              STA0138
    DI#DIR                                                              STA0139
    RHJ#RHOK                                                            STA0140
    BIKT#BIKTR                                                          STA0141
    S#SR                                                                STA0142
    R#RSR                                                               STA0143
    V#VR                                                                STA0144
    GF#GR                                                               STA0145
 12 ARG#(SMT2(I) +SMT(I))*0.5                                           STA0146
    UBAR(I)#0.0                                                         STA0147
    TVTT(I)#0.35*(TV(I+1)-ARG)                                          STA0148
    TW#0.65*(TV(I+1)-ARG)+ARG                                           STA0149
    HANK#                          (TV(I+1)-SMT(I))/(TV(I+1)-SMT2(I) )  STA0150
    IF(HANK)1,1,2                                                       STA0151
  1 CALL PDUMP(THERM,II,1)                                              STA0152
    ERR#1.0                                                             STA0153
    RETURN                                                              STA0154
  2 OM(I)#(SMT2(I) -SMT(I))/LOGF(HANK)                                  STA0155
    PCT#CP                                                              STA0156
    II#6                                                                STA0157
    CALLDINTPL(ARG,CT(I),AK)                                            STA0158
    II#5                                                                STA0159
    CALLDINTPL(ARG,CT(I),RHO)                                           STA0160
    II#7                                                                STA0161
    CALLDINTPL(ARG,CT(I),U)                                             STA0162
    II#1                                                                STA0163
    CALLDINTPL(ARG,CT(I),CZ)                                            STA0164
    BIGK1#(0.027*CZ*U**0.14*GF)/((GF*DI/(12.0*U))**0.2*                 STA0165
   1(U*CZ/AK)**0.66666667)                                              STA0166
  3 II#7                                                                STA0167
    CALL DINTPL(TW,CT(I),UW)                                            STA0168
    HI(I)# BIGK1/UW**0.14                                               STA0169
    USAVE#UBAR(I)                                                       STA0170
    DODI#DO /DI                                                         STA0171
    BIK24#24.0*BIKT                                                     STA0172
    REST#DO /BIK24*LOGF(DODI)+R                                         STA0173
    II#5                                                                STA0174
701 CALLDINTPL(TV(I+1),PCT,RHO)                                         STA0175
    II#6                                                                STA0176
    CALLDINTPL(TV(I+1),PCT,SMK)                                         STA0177
    II#7                                                                STA0178
    CALLDINTPL(TV(I+1),PCT,U)                                           STA0179
    HFG#1093.88-0.5703*TV(I+1)+1.2819E-4*TV(I+1)**2-0.8824E-6           STA0180
   1*TV(I+1)**3                                                         STA0181
 17 BIGK#0.728*((50.04E+8*RHO**2*SMK**3*(HFG+0.375*TVTT(I)))/           STA0182
   1(U*S ))**0.25*(1.2379476 + .35360826E-1*S - .15703466E-2*S**2 )     STA0183
 18 HO(I)#BIGK/(DO **0.25*TVTT(I)**0.25)                                STA0184
    UBAR1#DODI/HI(I)+REST+1.0/HO(I)                                     STA0185
    UBAR(I)#1.0/UBAR1                                                   STA0186
    AS(I)#QH(I)/(UBAR(I)*OM(I))                                         STA0187
    TVTTN#TVTT(I)                                                       STA0188
    TVTT(I)#UBAR(I)*OM(I)/HO(I)                                         STA0189
```

FIGURE 8 (Continued)

```
      IF(ABSF(TVTT(I)-TVTTN)/TVTTN-0.01)5,4,4                           STA0190
    4 TW#ARG+UBAR(I)*OM(I)*DO/(HI(I)*DI)                                STA0191
      GO TO 3                                                           STA0192
    5 IF(ABSF(UBAR(I)-USAVE)/UBAR(I)-0.0005)120,4,4                     STA0193
  120 IF(I    -NK)821,821,822                                           STA0194
  821 W#WF                                                              STA0195
      C#CCF                                                             STA0196
      GOTO823                                                           STA0197
  822 W#WO                                                              STA0198
      C#CO                                                              STA0199
  823 ARG#(SMT2(I) +SMT(I))*0.5                                         STA0200
      II#5                                                              STA0201
      CALLDINTPL(ARG,C,RHO)                                             STA0202
      SLS(I)#12.*AS(I)*DI**2*GF/(576.*DO*W)                             STA0203
      Z(I)#12.0*AS(I)/(DO *PI*SLS(I))                                   STA0204
C     CFM   IS REALLY CFMWV                                             STA0205
      CFMWV(I)#WV(I)/(60.0*TS(I+1))*EXPF(12.4636-0.021987*TS(I+1)+      STA0206
     10.18849E-4*TS(I+1)**2)                                            STA0207
      HV#1.00125*TV(I+1)-32.125+1093.88-0.5703*TV(I+1)+1.2819E-4*TV(I+1)STA0208
     1**2-0.8824E-6*TV(I+1)**3                                          STA0209
      HP1#1.00125*TV(I)-32.125                                          STA0210
      HP2#1.00125*TV(I+1)-32.125                                        STA0211
      CFMWZ(I)#WP(I)*(HP1-HP2)/(60.0*(HV+HP2)*TV(I+1))*EXPF(12.4632-    STA0212
     10.021987*TV(I+1)+1.8849E-5*TV(I+1)**2)                            STA0213
      HS(I)#(.0056+.02436/ (DI*V)** 0.32)*SLS(I)*12.0*V**2/(DI*64.348)  STA0214
     1*SSF                                                              STA0215
      SUMOM#SUMOM+OM(I)                                                 STA0216
      SUMLS#SUMLS+SLS(I)                                                STA0217
  428 ZBAR#ZBAR+Z(I)                                                    STA0218
      TRAYLH#SLS(I)+TSTH/12.0-0.5
      VVEV(I)#CFMWV(I)/(120.0*TRAYLH*FREBD*                             STA0219
     1AMODU*ALEV)                                                       STA0220
      TRAYFL(I)# (12.0*TWFA*TRAYLH-3.6-.63*SPL)                         STA0221
     1*1.0E+4/((610.0/(TS(I)+459.69))**3.12*                            STA0222
     2(RHJ /3.0)**0.6)+85000.0                                          STA0223
      IF(TRAYFL(I)-500000.0)20,20,21
   21 TRAYFL(I)#500000.0
   20 WBS(I)#WS(I)/(AMODU*ALEV)
      TRAYWD(I)#WBS(I)/TRAYFL(I)                                        STA0225
      II#5                                                              STA0226
      CALLDINTPL(TS(I),C(I),RHORES)                                     STA0227
      IF(I-1)1600,1600,1601                                             STA0228
 1601 DENBR(I-1)#RHORES                                                 STA0229
 1600 RESIDT(I)#(TRAYWD(I)*TRAYLH*BDEPH*                                STA0230
     1RHORES*3600.0)/WBS(I)                                             STA0231
      PV(I)#2.1786818-0.70443622E-1*TV(I+1)+0.93941286E-3*TV(I+1)**2    STA0232
     1-0.53958083E-5 *TV(I+1)**3 +0.18139197E-7*TV(I+1)**4              STA0233
  121 CONTINUE                                                          STA0234
      N#NTOTAL                                                          STA0235
      NL1#N-1                                                           STA0236
      DELP(N)#0.0                                                       STA0237
      A(N)#0.0                                                          STA0238
      ORHT(N)#0.0                                                       STA0239
      COFA1#COEFA*3600.                                                 STA0240
      DO 30 I#1,NL1                                                     STA0241
      DELP(I)#PV(I)-PV(I+1)                                             STA0242
      A(I)#(TRAYFL(I)*TRAYWD(I))/(COFA1*SQRTF(DENBR(I)*DELP(I)*9273.6)) STA0243
      ORHT(I)#A(I)/TRAYWD(I)                                            STA0244
   30 CONTINUE                                                          STA0245
```

FIGURE 8 (Continued)

```
      II#2                                                              STA0246
      CALLDINTPL(THF,CCF,HHF)                                           STA0247
      CALLDINTPL(TCF,CCF,HCF)                                           STA0248
      TSTEM#TSTEAM                                                      STA0249
      AMBDAS#1093.88-0.5703*TSTEM+1.2819E-4*TSTEM**2-0.8824E-6*TSTEM**3 STA0250
      WSY  #WF*(THF-TCF)/AMBDAS          *CPBT*TER5                     STA0251
      WY#WSY                                                            STA0252
      PR#WPN*1.0E+3/(AMBDAS*WY)                                         STA0253
      BARCM#SUMOM/ANS(M)
C     BRINEHEATER                                                       STA0257
      WTME#0.0                                                          POW0127
      WTMR#0.0                                                          POW0128
      J#NK+1
      DO 960 I#J,NTOTAL
      IF(WTMR-TRAYWD(I))988,960,960                                     POW0157
  988 WTMR#TRAYWD(I)                                                    POW0158
  960 CONTINUE
      DO 961 I#1,NK
      IF(WTME-TRAYWD(I))989,961,961                                     POW0165
  989 WTME#TRAYWD(I)                                                    POW0166
  961 CONTINUE
      C(1)#CCF                                                          PUT0124
      AME#WTME*(BDEPH-0.25)                                             PUT0130
      AMR#WTMR*(BDEPH-0.25)                                             PUT0131
      DO 500 I#1,NTOTAL                                                 PUT0137
  500 ALPHA(I)#TS(I+1)-TV(I+1)                                          PUT0138
      DO519 I#1,NK                                                      PUT0139
      II#5                                                              PUT0140
      CALL DINTPL(TS(I),C(I),RHOB)                                      PUT0141
      DPREQ(I)#CL/(9266.112*RHOB)*(WS(I)/(3600.0*AME*AMODU*ALEV))**2    PUT0142
  519 CONTINUE                                                          PUT0143
      JNK#NK+1                                                          PUT0144
      DO518I#JNK,NTOTAL                                                 PUT0145
      II#5                                                              PUT0146
      CALL DINTPL(TS(I),C(I),RHOB)                                      PUT0147
      DPREQ(I)#CL/(9266.112*RHOB)*(WS(I)/(3600.0*AMR*AMODU*ALEV))**2    PUT0148
  518 CONTINUE                                                          PUT0149
      EFSA#TRAYWD(NK)*ELE*ALEV*AMODU                                    PUT0128
      RFSA#TRAYWD(NTOTAL)*RLR*ALEV*AMODU                                PUT0129
      IF(M-1)102,101,102                                                STA0258
  101 THM#(THF-TCF)/LOGF((TSTEAM-TCF)/(TSTEAM-THF))                     STA0259
      ARG#(TCF+THF)*0.5                                                 STA0260
      II#5                                                              STA0261
      CALL DINTPL(THF,CCF,RHO)                                          STA0262
      GH#3600.0*VH*RHO                                                  STA0263
      TT#0.35*(TSTEAM-ARG)                                              STA0264
      TW#0.65*(TSTEAM-ARG)+ARG                                          STA0265
      II#6                                                              STA0266
      CALLDINTPL(ARG,CCF,AK)                                            STA0267
      II#5                                                              STA0268
      CALLDINTPL(ARG,CCF,RHO)                                           STA0269
      II#7                                                              STA0270
      CALLDINTPL(ARG,CCF,U)                                             STA0271
      II#1                                                              STA0272
      CALLDINTPL(ARG,CCF,CZ)                                            STA0273
      BIGK3#(0.027*CZ*U**0.14*GH)/((GH*DIH/(12.0*U))**0.2*              STA0274
     1(U*CZ/AK)**0.66666667)                                            STA0275
    6 II#7                                                              STA0276
      CALLDINTPL(TW,CCF,UW)                                             STA0277
```

FIGURE 8 (Continued)

```
      HIH#BIGK3/UW**0.14                                                STA0278
      USAVE#UBARH                                                       STA0279
      PCT#0.0                                                           STA0280
      HFG#1093.88-0.5703*TSTEM  +1.2819E-4*TSTEM  **2-0.8824E-6*TSTEM**3STA0281
      II#5                                                              STA0282
      CALLDINTPL(TSTEAM,PCT,RHO)                                        STA0283
      II#6                                                              STA0284
      CALLDINTPL(TSTEAM,PCT,AK)                                         STA0285
      II#7                                                              STA0286
      CALLDINTPL(TSTEAM,PCT,U)                                          STA0287
      DOHDIH#DOH/DIH                                                    STA0288
      BIK24#24.0*BIKTH                                                  STA0289
      PARTU#DOH/BIK24 *LOGF(DOHDIH)+RH                                  STA0290
 1001 CAPK#0.728*((50.04E+8*RHO**2*AK**3*(HFG+0.375*TT))/(SH*U))**0.25  STA0291
     1  *  (1.2379476 + .35360826E-1*SH- .15703466E-2*SH**2 )           STA0292
  231 HOH#CAPK/(DOH**0.25*TT**0.25)                                     STA0293
      UBARI#DOHDIH/HIH+PARTU+1.0/HOH                                    STA0294
      TTN#TT                                                            STA0295
      UBARH#1.0/UBARI                                                   STA0296
      TT#UBARH*THM/HOH                                                  STA0297
      IF(ABSF((TT-TTN)/TT)-0 .01)8,7,7                                  STA0298
    7 TW#ARG+UBARH*THM*DOH/HIH                                          STA0299
      GO TO 6                                                           STA0300
    8 IF(ABSF(UBARH-USAVE)/UBARH-0.0005)1000,7,7                        STA0301
 1000 II#2                                                              STA0302
      CALLDINTPL(THF,CCF,HHF)                                           STA0303
      CALLDINTPL(TCF,CCF,HCF)                                           STA0304
      AH#(HHF-HCF)*WF/(UBARH*THM)                                       STA0305
      ARG#(TCF+THF)*0.5                                                 STA0306
      II#5                                                              STA0307
      CALLDINTPL(ARG,CCF,RHO2)                                          STA0308
      HLH#12.0*AH*DIH**2*GH/(576.0*DOH*WF)                              STA0309
      HN#12.0*AH/(PI*DOH*HLH)                                           STA0310
  102 RETURN
      END                                                               STA0316
```

FIGURE 8 (Continued)

BIBLIOGRAPHY

1. Briggs, D. E. and Young, E. H., The Condensing of Low Pressure Steam on Horizontal Titanium Tubes, The University of Michigan, Department of Chemical and Metallurgical Engineering Heat Transfer Laboratory, Report No. 55, December 1963.

2. Keenan, J. H. and Keyes, F. G., Thermodynamic Properties of Steam, New York: John Wiley & Sons, Inc., May 1949.

3. Oak Ridge National Laboratory Desalination Cost Notebook, Unpublished.

4. Stoughton, R. W. and Lietzke, M. H., "Calculation of Some Thermodynamic Properties of Sea Salt Solutions at Elevated Temperatures from Data on NaCl Solutions," J. Chem. Eng. Data, 10:254 (July 1965).

5. Unterberg, W., Thermophysical Properties of Aqueous Sodium Chloride Solutions, University of California, Los Angeles, Report No. 64-21, May 1964.

Internal Distribution

1. S. E. Beall
2-31. C. C. Burwell
32. F. L. Culler
33. R. A. Ebel (K-25)
34. D. M. Eissenberg
35. A. P. Fraas
36. R. P. Hammond
37. P. N. Haubenreich
38. D. M. Lang (K-25)
39. C. E. Larson (K-25)
40. M. I. Lundin
41. R. N. Lyon
42. H. G. MacPherson
43. R. E. MacPherson
44. H. C. McCurdy
45. A. J. Miller
46. C. T. Mothershed (K-25)
47. J. C. Moyers
48. H. M. Noritake (K-25)
49. J. A. Parsons (K-25)
50. L. P. Pasquier (K-25)
51. A. M. Perry
52. M. J. Skinner
53. I. Spiewak
54. D. B. Trauger
55. G. D. Whitman
56. R. Van Winkle
57. A. M. Weinberg
58. R. B. Winsbro (K-25)
59. G. Young
60-61. Central Research Library (CRL)
62-63. Y-12 Document Reference Section (DRS)
64-66. Laboratory Records Department (LRD)
67. Laboratory Records Department – Record Copy (LRD-RC)

External Distribution

68. R. L. Clark, Bechtel Corporation, San Francisco
69-73. F. C. Di Luzio, OSW, Washington
74. D. Gallen, Bechtel Corporation, San Francisco
75. Herbert S. Isbin, University of Minnesota
76. T. A. Johnston, General Atomic
77. W. N. Johnson, Bechtel Corporation, Los Angeles
78. B. G. Jones, University of Illinois
79. Brian Mar, Boeing Company, Seattle
80. D. R. McIlvain, Catalytic Construction Company
81. I. W. Nealon, Bechtel Corporation, San Francisco
82. P. M. Rapier, Bechtel Corporation, San Francisco

83-87. W.A. Williams, AEC, Washington
88. M. Zizza, Burns & Roe, Incorporated, New York
89-103. Division of Technical Information Extension (DTIE)
104. Research and Development Division, ORO
105-106. Reactor Division, ORO