OAK RIDGE NATIONAL LABORATORY LIBRARIES

3 4456 0566276 1

CENTRAL RESEARCH LIBRARY
DOCUMENT COLLECTION

3

ORNL-3041
UC-32 – Mathematics and Computers

SDC, A SHIELDING-DESIGN CALCULATION CODE FOR FUEL-HANDLING FACILITIES

E. D. Arnold
B. F. Maskewitz

OAK RIDGE NATIONAL LABORATORY
operated by
UNION CARBIDE CORPORATION
for the
U.S. ATOMIC ENERGY COMMISSION

Printed in USA. Price $3.00. Available from the Clearinghouse for Federal Scientific and Technical Information, National Bureau of Standards, U.S. Department of Commerce, Springfield, Virginia

LEGAL NOTICE

This report was prepared as an account of Government sponsored work. Neither the United States, nor the Commission, nor any person acting on behalf of the Commission:

A. Makes any warranty or representation, expressed or implied, with respect to the accuracy, completeness, or usefulness of the information contained in this report, or that the use of any information, apparatus, method, or process disclosed in this report may not infringe privately owned rights; or

B. Assumes any liabilities with respect to the use of, or for damages resulting from the use of any information, apparatus, method, or process disclosed in this report.

As used in the above, "person acting on behalf of the Commission" includes any employee or contractor of the Commission, or employee of such contractor, to the extent that such employee or contractor of the Commission, or employee of such contractor prepares, disseminates, or provides access to, any information pursuant to his employment or contract with the Commission, or his employment with such contractor.

ORNL-3041

Contract No. W-7405-eng-26

CHEMICAL TECHNOLOGY AND NEUTRON PHYSICS DIVISIONS

SDC, A SHIELDING-DESIGN CALCULATION CODE FOR FUEL-HANDLING FACILITIES

E. D. Arnold
B. F. Maskewitz

MARCH 1966

OAK RIDGE NATIONAL LABORATORY
Oak Ridge, Tennessee
operated by
UNION CARBIDE CORPORATION
for the
U.S. ATOMIC ENERGY COMMISSION

CONTENTS

		Page
	Abstract	1
1.	Introduction and Summary	2
2.	Formulas and Graphs for Geometries	3
	2.1 Equations for Uncollided Flux	4
	2.2 Buildup Factors	19
	2.3 Self-Absorption Parameters for Cylinders and Spheres	22
3.	Evaluation of Miscellaneous Functions	29
	3.1 Exponential Integral $E_n(x)$	29
	3.2 Function $F(\theta,\mu t)$	31
	3.3 Functions Fitted to Curves	31
	3.4 Riemann Function	31
4.	Data-Library Utilization	34
5.	Input Preparation	60
	5.1 Number Formats	60
	5.2 Input Data Cards	60
6.	Operation	68
	References	70

SDC, A SHIELDING-DESIGN CALCULATION CODE FOR FUEL-HANDLING FACILITIES

E. D. Arnold
B. F. Maskewitz

ABSTRACT

A simplified computer code, SDC, is presented for calculating the gamma-shielding requirements for chemical processing, fabrication, or fuel-handling facilities. It is a FORTRAN code designed for the IBM 7090 computer.

SDC was designed to handle 13 source geometries (point, line, disk, plane, slab, cylinder with shield at side, cylinder with shield at end, sphere, ring, rod cluster, skew line, annular cylinder with shield at side, and annular cylinder with shield at end) either unshielded or shielded by slab shields.

Materials of construction for shield, cladding, or source volume may be selected from a list of 17.

As many as 12 gamma-energy groups, covering an energy range of 0.10 to 10 Mev, with corresponding source strengths, may be used to describe the gamma spectrum.

Integration of the basic exponential attenuation-point kernel over the various geometries was the method chosen for calculating the uncollided gamma flux. Biological dose rate was obtained by multiplying this uncollided flux by the product of a flux-weighted buildup factor and a dose-conversion factor.

SDC has been used successfully to evaluate shield thickness and, or, dose rates for several design jobs, with an average machine time of less than 0.01 hr per case. Dose-rate determinations, where compared with experiment or other calculations, have been conservative (+ 0-50%).

Complete documentation and a code package is available from the Radiation Shielding Information Center. Inquiries or requests for the code package may be mailed to:

Codes Coordinator
Radiation Shielding Information Center
Oak Ridge National Laboratory
Post Office Box X
Oak Ridge, Tennessee 37830

or telephoned to:

Area Code 615, 483-8611, ext. 3-6944, or to
FTS XX-615-483-6944.

1. INTRODUCTION AND SUMMARY

The Shielding-Design Calculation Code (SDC), as its name implies, was developed for performing shielding-design calculations for chemical and fabrication facilities. It is a FORTRAN code designed for the IBM 7090 computer and was written to perform basic gamma-shielding calculations. SDC eliminates most of the tedium of performing shielding computations by hand without the subsequent substitution of complex instructions for data preparation or machine handling. The simplified data sheet should allow use of this code by almost anyone connected with fuel handling even if he has had little or no experience with shielding or computers.

The code was designed to handle 13 source geometries shielded by slab shields. Space was allotted for 17 materials that may be selected for shield, cladding, source, or fill. Two major options in the code permit calculation of (1) required shield thickness when a dose-rate target is specified, or (2) dose rate when the shield thickness is given. (Calculation of dose rates from unshielded sources as well as surface intensities for cylinders and spheres is also included.) As many as 12 gamma energy groups, covering an energy range of 0.10 to 10 Mev, with corresponding source strengths, may be included in the calculation. The source strengths may be varied for a given source-shield geometry by adding new source cards.

SDC supplies many calculational features as built-in data: (1) E and F functions were calculated by special subroutines. (2) Self-absorption coefficients for large distances from the source (cylinders and spheres) were evaluated from the data and fitted to a polynomial by the method of least squares. (3) Self-absorption factors for small distances from the source were obtained from the curves presented in several references,[1-4] the values were tabulated, and a double interpolation subroutine was written to evaluate the self-absorption coefficient. (4) Total linear attenuation coefficients were taken from various sources for the listed material options. Linear interpolation is used to find intermediate values from these tables. (5) Dose-buildup factors were obtained either directly from the literature or calculated and/or estimated from other data in the literature, with double interpolation used to obtain intermediate values.

The basic makeup of the code consists of (1) a calling program, (2) the calculation subroutines that perform the individual source-geometry calculations, (3) standard and special mathematical subroutines, (4) standard and special input-output subroutines, and (5) a double-interpolation subroutine to perform table-lookup operations. Linear fractional iteration is used to find the required thickness of shield when a dose-rate target is given.

SDC has been used successfully to evaluate shield thickness and, or, dose rates for several design jobs at Oak Ridge National Laboratory. The average machine time was less than 0.01 hr per case. This report presents the following subjects: formulas and graphs for the 13 geometries, including equations for the uncollided flux and buildup factors; evaluation of miscellaneous functions necessary to perform the calculations; data library utilization along with an output of the basic data; input preparation and discussion of the data sheet; and operation.

2. FORMULAS AND GRAPHS FOR GEOMETRIES

In this section, the formulas, geometric descriptions, and graphs (where necessary) are given for the uncollided flux of radiation from certain sources and shields. Simple attenuation kernels are assumed. The buildup factor and other conversion factors are then applied to this flux value to obtain dose rate.

In the succeeding formulas, graphs, and tables the following terms and symbols will be used:

<u>Sources</u>: S, total source or isotropic point source (sec^{-1}); S_L, isotropic line source (sec^{-1} cm^{-1}); S_A, isotropic surface source (sec^{-1} cm^{-2}); S_V, isotropic volume source (sec^{-1} cm^{-3}).

<u>Distances</u>: t, shield thickness (cm); t_c, volume source self-absorption distance (cm); Z, distance from source to inside face of shield (cm); R, distance from source to detector (cm); and D, distance from outside face of shield to detector (cm). Thus, $R = Z + t + D$.

Attenuation coefficients: μ, attenuation coefficient for shield (cm^{-1}); μ_c, attenuation coefficient for volume source (cm^{-1}).

2.1 Equations for Uncollided Flux

The mathematical expressions that give the value of the uncollided flux (without buildup factor) in terms of source strength, shielding properties, and type of geometry are given in Figs. 1 through 13, all shown at the end of this subsection. The figure numbers also refer to the corresponding geometry source option listed in the data sheet. In general, the subroutine in which each geometry option is considered is named, in parentheses, in the geometry descriptions which follow.

1. Point Source: Figure 1 illustrates two positions for the source-detector relationship, that is, the line joining them in relation to the perpendicular to the shield face.

2. Line Source (LINE): Figure 2 shows the equations for the flux at four positions emanating from a line source either parallel or perpendicular to a slab shield. The subscripts on the P term correspond to the numbers used for P* (col 3 card 2) on the data sheet (Sect. 5). The dimensions, H_L, H_1, Z, D, and t, are illustrated in the manner representative of the way they are to be used in filling out the data sheet. The reader should particularly note the difference in use of the terms Z and H_1 between P_4 and the other dose points. A discussion of the function $F(\theta,\mu t)$ is given in Sect. 3.

3. Disk Source (DISKS): Figure 3 lists the equations for the flux from a disk source at two positions of the dose point. Dose point P_1 is directly opposite the center of the disk, while P_2 is displaced from P_1. The equation for ϕ_1 involves the E_1 exponential integral, discussed in Sect. 3. The equation for ϕ_2 is somewhat more complex and requires a numerical double integration. Displacement is handled by filling in a value for D_p in cols 49-53 of card 2 on the data sheet (see Sect. 5).

4. Plane Source (PLANE): Figure 4 illustrates the manner in which two types of plane sources are handled in SDC: (1) an infinite plane and (2) a finite plane. The equation for the flux from an infinite plane is straightforward and is given by ϕ_∞. The flux from a finite plane of height H_L (specified in cols 32 through 36, card 2, of the data sheet) and area A is obtained by assuming that the plane is divided into N line sources, H_L cm long by 1 cm wide (used to convert S_A to equivalent S_L' values such that $NH_L S_L' = AS_A$), and the flux from each line is obtained in the normal manner with R and μt corrected by the proper angles. The total flux is then obtained by summing the N partial fluxes. To distinguish between an infinite plane and a finite plane, a value of H_L is given on the data sheet for a finite plane (H_L is left blank for an infinite plane). In both cases the area is given in order to calculate S_A.

5. Slab Source (SLAB): Figure 5 illustrates the manner in which two types of slab sources are handled. These two are (1) a slab of finite thickness but infinite in height and width and (2) a slab of finite thickness and also finite in height and width. The equation for the flux from the infinite slab is straightforward and is given by ϕ_∞. A new function, E_2 (second exponential integral), is introduced and is discussed in Sect. 3. The flux from the finite slab is obtained by calculating an equivalent plane source located at the midplane of the slab and reduced in intensity by a self-absorption factor. The self-absorption factor (SAF/G) is made up of two terms: (1) the self-absorption factor (SAF) for an infinite slab source, and (2) a small geometric correction factor G which corrects for source-to-detector distances in a manner very similar to that for the self-absorption parameters for a cylindrical source. The final calculation from the equivalent plane is then performed in the same way as that from the finite plane described above. The infinite slab is handled on the data sheet by giving a value for the volume in order to obtain a correct value for S_V. The finite slab must have values of volume,

area, and H_L given, from which t_s can be calculated. The value of t_s may also be given as input by filling in columns 44-48 (R_o) of card 2 (item 10, Sect. 5).

6. Cylindrical Source, Shield at Side (CYLSAS): Figure 6 lists the equations for the flux at two positions emanating from a cylindrical source with slab shield parallel to the axis of the cylinder. The procedure for obtaining the flux is first to obtain a "self-absorption distance," which is the distance from the near-curved cylindrical surface to an interior line source which would give the same dose. The total source strengths per unit length for cylinder and line are the same. Data of Taylor and Obenshain,[5] which were refitted by Purohit[4] to obtain more accurate results, are presented by three curves for obtaining the "self-absorption distance." The datum points of these curves are presented as tables or functions in SDC (see Sects. 3 and 4). The self-absorption distance t_c is determined as follows:

   1. For $Z/a \geq 10$, obtain $\mu_c t_c$ from Fig. 14 (Sect. 2.3) and solve for t_c.
   2. For $Z/a < 10$, obtain $\mu_c t_c/m$ from Fig. 15, obtain m from Fig. 16, and solve for t_c.

7. Cylindrical Source, Shield at End (CYLSAE): Figure 7a gives the equation for the flux at a point on the extended axis of the cylinder. The shield is perpendicular to this axis. This equation involves the E_2 function. The equation as listed is the so-called "upper-limit equation," which calculates the flux for a point at the apex of a truncated cone whose near face coincides with that of the cylinder, the cone and cylinder being of the same height, H_L. The upper-limit equation was used since this is the usual practice in design. In addition to the flux along the axis, it is possible to calculate the flux at a point displaced from the axis. This is accomplished in the program by assuming that the total source strength can be divided into two parts: (1) $S_A'*\pi R_o^2$ distributed over the upper base of the cylinder and (2) $S_L'*H_L = S - (S_A'*\pi R_o^2)$ distributed along an equivalent line parallel to the axis and displaced a distance t_c

from the outer surface. The equivalent surface source S'_A is first determined by equilibrating the unshielded flux from the actual cylinder [where the cylinder has a source strength $S(S_V = S/V)$] at a point P_A on the axis to that from a disk source of the same area as the base and back calculating S'_A. The source strength to be allocated to the equivalent line is then $S - S'_A * \pi R_O^2$. The source per unit length of line would then become $S'_L = (S - S'_A * \pi R_O^2)/H_L$. The total flux at point P_D is then equal to the sum of the flux for the equivalent displaced disk and the flux from the line located a distance t_c from the outside surface of the cylinder. The distance t_c is obtained in the way described for the cylinder with shield at the side. Figure 7b illustrates the geometrical arrangement for this option.

8. Spherical Source (SPHERE): Figure 8 lists the equation used to calculate the flux from a spherical volume source with slab shield. The actual calculation assumes that the gamma rays are produced by a disk source having the same radius as the sphere but located a distance t_c from the nearest point. Values of $\mu_c t_c$ and t_c are found from the data of Figs. 17 and 18 (Sect. 2.3), using a calculated value of μ_c.

9. Ring Source (RING): Figure 9 gives the geometrical representation and flux equation for the ring source. The drawing and equation are self-explanatory.

10. Rod-Cluster Source (ROD): The flux and dose rate from a rod-cluster source may be calculated with shielding at the side or at the end. The actual computation utilizes the equations for the cylinders having the corresponding shield arrangements. The flux with shield at the side is calculated if a 1 or 2 is given for P* in card 2, col 3; while the flux with shield at the end is calculated if P* is blank or zero. The computation proceeds by homogenizing the rod-cluster source into an equivalent cylinder having the same volume, height, cross-sectional area, and mass. The rod cluster is assumed to consist of N_{asb} assemblies each having N_{rod} rods. An assembly can have either a square, equilaterial triangle, or regular polygon cross-section. The rod-cluster calculation may utilize several different materials

in the homogenization process. The homogenization process considers the volume and material of rods, rod cladding, and space between rods. Geometrical representation and definitions are given in Fig. 10.

The homogenization is accomplished as follows:

1. Find volume and weight of fuel in each assembly; thus,

$$V_{fuel} = N_{rods}\ \pi r_{rod}^2\ H_L \ ,$$

$$W_{fuel} = V_{fuel}\ \rho_{fuel} \ .$$

2. Find volume and weight of rod cladding (rc) in each assembly; thus,

$$V_{clad} = 2\pi(r_{rod} + t_{rc}/2)t_{rc}\ H_L\ N_{rods} \ ,$$

$$W_{clad} = V_{clad}\ \rho_{clad} \ .$$

3. Find volume of one assembly. If assembly is square,

$$V_{asb} = H_L E_B^2 \ .$$

If assembly is a triangle or polygon, it is necessary to define an area for the assembly called the "rubber-band" (rb) area (i.e., the area enclosed by a rubber band stretched around the assembly), thus

$$A_{rb} = \frac{1}{4}\, n(2R_A \sin\frac{\pi}{n})^2\ (\mathrm{ctn}\ \frac{\pi}{n}) + n2R_A \sin\frac{\pi}{n}\ (r_{rod} + t_{rc}) + \pi(r_{rod} + t_{rc})^2$$

then,

$$V_{asb} = H_L A_{rb} \ .$$

4. Find weight of fill material (material which fills space between rods):

$$W_{fill} = (V_{asb} - V_{fuel} - V_{clad})\ \rho_{fill} \ .$$

5. Find total weight:

$$W_{total} = (W_{fuel} + W_{clad} + W_{fill})\ N_{asb} \ .$$

6. Find total volume:

$$V_{total} = V_{asb} N_{asb} .$$

7. Find effective density:

$$\rho_{eff} = W_{total}/V_{total} .$$

8. Find effective radius of equivalent cylinder:

$$R_o' = \sqrt{V_{total}/(\pi H_L)} .$$

9. Find effective value of $(\frac{\mu}{\rho})^{\xi}$ and μ_c^{ξ} :

$$(\frac{\mu}{\rho})^{\xi} = \frac{\left[(\frac{\mu}{\rho})_{fuel} W_{fuel} + (\frac{\mu}{\rho})_{clad} W_{clad} + (\frac{\mu}{\rho})_{fill} W_{fill}\right]}{W_{fuel} + W_{clad} + W_{fill}} ,$$

$$\mu_c^{\xi} = (\frac{\mu}{\rho})^{\xi} \rho_{eff} .$$

These nine steps have converted the rod cluster to an equivalent cylinder of radius R_o' having an effective density ρ_{eff} and an effective linear absorption coefficient μ_c^{ξ} .

One difference in input between the rod cluster and the cylinder (both with shield at side) is that the term Z in the rod cluster case is measured from the center of the cluster rather than from the outside surface. Any assembly-box material or spacer plates are considered to be clad around each assembly in the array. If additional cladding material is to be used on the inside face of the shield, the user must re-evaluate the thickness of this cladding by distributing its thickness to each of the assemblies so that the total path length through the cladding material is correctly used. Of course, if the array is made up of one assembly, then the shield cladding is the same as the assembly cladding. In general, any extra cladding will be assumed to be placed around the entire rod cluster at some distance R_c from the center of the cluster. For this condition, in order to correct for the thickness of the external cladding (ec), t_{ec}, it will be necessary to add a thickness, Δt_{bc}, to the assembly cladding. The value of Δt_{bc} can be found from

$$\Delta t_{bc} = \pi R_c \, t_{ec} / (2E'_B \, N_{asb}) \quad ,$$

and then

$$t'_{clad} = t_{bc} + \Delta t_{bc} \quad ,$$

where

t_{bc} = thickness of assembly box cladding,

t'_{clad} = effective total cladding thickness, read as <u>clad thickness</u> in cols 52-56, card 2,

Δt_{bc} = additional assembly-box cladding equivalent to external cladding,

t_{ec} = thickness of external cladding,

R_c = effective radius of external cladding,

N_{asb} = number of assemblies in cluster,

E'_B = effective edge dimension of assembly.

If assembly is square, then

$$E'_B = E_B \text{ (where } E_B = \text{actual edge dimension)} \; .$$

If assembly is an equilateral triangle or a regular polygon, then

$$E'_B = 2(R_A + r_{rod} + t_{rc})(\sin \tfrac{\pi}{n}) \quad ,$$

where

R_A = outside radius of polygon or triangle (to center of outermost rod in assembly),

r_{rod} = radius of fuel part of rod,

t_{rc} = thickness of rod clad,

n = number of sides in polygon or triangle.

The effective cladding thickness to be used in the shielding calculation is then found as follows:

1. Find the weight of cladding for one assembly:

   (a) If square assembly:

$$W_{asb\text{-}clad} = 4E'_B t'_{clad} H_L \rho_{clad} + 4(t'_{clad})^2 \, H_L \rho_{clad}$$

(b) If triangle or polygonal assembly:

$$W_{asb\text{-}clad} = nE'_B t'_{clad} H_L \rho_{clad} + nt'_{clad} \tan\left(\frac{\pi}{n}\right) H_L \rho_{clad}$$

2. Find the total weight of cladding:

$$W_{total\ clad} = W_{asb\ clad} N_{asb}$$

3. Then the effective cladding thickness is:

$$t_{clad\ eff} = \frac{W_{total\ clad}}{\rho_{clad}\ 2R'_o\ H_L}$$

11. Skew-Line Source (SKEW): The geometrical representation and equations for the flux from a line source which is skew to the shield face is illustrated in Fig. 11. This figure shows a skew line with clockwise rotation (with respect to the top of the line). Counterclockwise rotation is also handled if an entry is made in cols 66-67 of card 2 (item 17, Sect. 5). The only difference between the two rotations is in the definition of the angles ψ. These angles are found from H_L, H_1, R, and θ (the angle of rotation) as follows:

At P_1:

Clockwise rotation

$$\psi_1 = \tan^{-1}\left[\frac{(H_1 - H_L)\cos\theta}{R}\right],$$

$$\psi_2 = \tan^{-1}\left[\frac{H_1 \cos\theta}{R + H_L \sin\theta}\right],$$

Counterclockwise rotation

$$\psi_1 = \tan^{-1}\left[\frac{(H_1 - H_L)\cos\theta}{R}\right],$$

$$\psi_2 = \tan^{-1}\left[\frac{H_1 \cos\theta}{R - H_L \sin\theta}\right],$$

At P_2:

Clockwise rotation

$$\psi_1 = \tan^{-1}\left[\frac{(H_L - H_1)\cos\theta}{R - (H_L - H_1)\sin\theta}\right],$$

$$\psi_2 = \tan^{-1}\left[\frac{H_1\cos\theta}{R + H_1\sin\theta}\right],$$

Counterclockwise rotation

$$\psi_1 = \tan^{-1}\left[\frac{(H_L - H_1)\cos\theta}{R + (H_L - H_1)\sin\theta}\right],$$

$$\psi_2 = \tan^{-1}\left[\frac{H_1\cos\theta}{R - H_1\sin\theta}\right].$$

At P_3:

Clockwise rotation

$$\psi_1 = \tan^{-1}\left[\frac{H_L\cos\theta}{R - H_L\sin\theta}\right],$$

Counterclockwise rotation

$$\psi_2 = \tan^{-1}\left[\frac{H_L\cos\theta}{R + H_L\sin\theta}\right].$$

12. Annular Cylinder, Shield at Side (ANCLAS): Figure 12 illustrates the manner in which the radiation dose rate is calculated from an annular cylinder with the shield at side. The method can be simply described by saying that the dose rate from the annular cylinder is equal to the dose rate from a cylinder of the same specific activity and outside radius minus the dose rate from the smaller cylinder of radius R_A and source strength S_V but shielded by the material and thickness of the annulus as well as the shield material. The calculation is accomplished by first calculating the uncollided flux from each of the cylinders to get the net flux, and then calculating the dose rate from each cylinder to obtain the net dose rate. The individual calculations are obtained by the same methods described for geometry 6.

13. Annular Cylinder, Shield at End (ANCLAE): The geometrical representations for this scheme are given in Fig. 13. The flux from this geometry consists of two contributions: (1) flux from the upper surface of the annulus and (2) flux from the inside surface of the annulus. The flux from the upper surface is obtained by subtracting the flux equivalent due to the small cylinder from the flux due to

the large cylinder. The equation can be obtained by combining the equations for two cylinders with shield at end. The resulting equation is then:

$$\phi_e = \frac{S_V}{2\mu_c}\left\{\frac{E_2\left[(\mu t + \mu_c H_L)\ \sqrt{1 + (R_o/R)^2}\right]}{\sqrt{1 + (R_o/R)^2}} - \frac{E_2\left[\mu t\sqrt{1 + (R_o/R)^2}\right]}{\sqrt{1 + (R_o/R)^2}}\right.$$

$$\left. - \frac{E_2\left[(\mu t + \mu_c H_L)\ \sqrt{1 + (R_A/R)^2}\right]}{\sqrt{1 + (R_A/R)^2}} + \frac{E_2\left[\mu t\sqrt{1 + (R_A/R)^2}\right]}{\sqrt{1 + (R_A/R)^2}}\right\} .$$

The flux from the inside surface of the cylinder is found by assuming that the annulus can be broken up into several wedges and that the total flux is equal to the sum of the fluxes from the wedges. To do this we assume that each wedge can be converted into a small cylinder that has a diameter equal to the annular thickness and a cross-sectional area equal to the wedge section of the annulus. The number of wedges can be found from the following equations:

$$A_{wedge} = A_{cyl}$$

$$A_{wedge} = 1/2\ \theta(R_o^2 - R_A^2)$$

$$A_{cyl} = \frac{\pi}{4}(R_o - R_A)^2$$

$$\therefore\ 1/2\ \theta\pi(R_o^2 - R_A^2) = \pi/4\ (R_o - R_A)^2$$

$$\theta = \frac{\pi}{2}\frac{R_o - R_A}{R_o + R_A}$$

$$\text{No. of wedges} = N_{wedges} = \frac{2\pi}{\theta} = \frac{2\pi}{\frac{\pi}{2}\left(\frac{R_o - R_A}{R_o + R_A}\right)} = 4\left(\frac{R_o + R_A}{R_o - R_A}\right)$$

The total radiation by this contribution at P will be equal to N_{wedges} times the radiation at P from one equivalent cylinder. The source strength for each equivalent cylinder is assumed to be distributed along a line source located a distance t_{ce} in from the surface. This distance t_{ce} is found in the normal manner for a cylinder using R_A as the distance from source to dose point. Since the shield is perpendicular to this line, the average penetration through source material is found by multiplying t_{ce} by the cosecant of the average angle between the line and dose point. The flux from one equivalent cylinder may then be found from the following:

1. The source per unit length of equivalent line is

   $$S_{Le} = S_V R_E^2 \pi \ .$$

2. The equation for the flux (ϕ_{wedge}) from one wedge is:

   $$\phi_{wedge} = \frac{S_{Le}}{4\pi(R_A + t_{ce})} \left[F(\theta_2, b_e) - F(\theta_1, b_e)\right] \ ,$$

   where

   $$b_e = \mu_s t_s + (\mu_{clad}\ t_{clad} + \mu_c\ t_{ce}) \csc\left(\frac{\theta_1 + \theta_2}{2}\right) \ .$$

The total flux from the annular cylinder with shield at the end would then by:

$$\phi_e + N_{wedges}\phi_{wedge} \ .$$

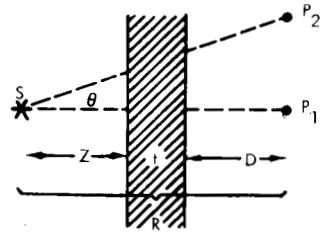

The Flux at P_1 is Given by:

$$\Phi_1 = \frac{Se^{-\mu t}}{4\pi R^2}$$

The Flux at P_2 is Given by:

$$\Phi_2 = \frac{Se^{-\mu t \sec\theta}}{4\pi (R \sec\theta)^2}$$

Fig. 1 Point Source

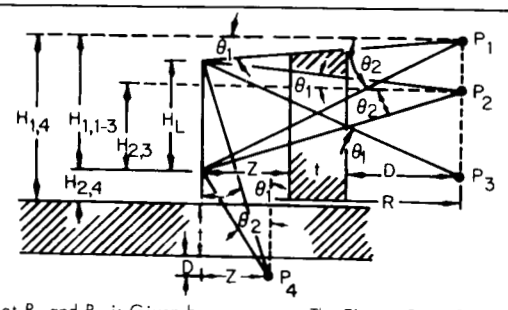

The Flux at P_1 and P_4 is Given by:

$$\phi_1 = \frac{S_L}{4\pi R}\left[F(\theta_2, \mu t) - F(\theta_1, \mu t)\right]$$

The Flux at P_2 is Given by:

$$\phi_2 = \frac{S_L}{4\pi R}\left[F(\theta_1, \mu t) + F(\theta_2, \mu t)\right]$$

The Flux at P_3 is Given by:

$$\phi_3 = \frac{S_L}{4\pi R}\left[F(\theta_1, \mu t)\right]$$

The Flux at P_4 is Given by:

$$\phi_4 = \frac{S_L}{4\pi Z}\left[F(\theta_2, \mu t) - F(\theta_1, \mu t)\right]$$

Fig. 2 Line Source

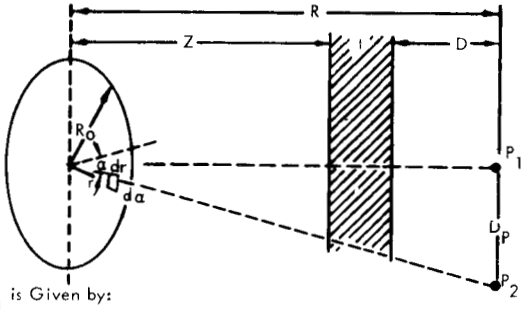

The Flux at P_1 is Given by:

$$\phi_1 = \frac{S_A}{2}\left\{E_1(\mu t) - E_1\left[\mu t\sqrt{1 + \left(\frac{R_o}{R}\right)^2}\right]\right\}$$

The Flux at P_2 is Given by:

$$\phi_2 = \frac{S_A}{4\pi}\int_0^{R_o}\int_0^{2\pi} \frac{\exp\left[-\frac{\mu t}{R}(R^2 + r^2 + D_P^2 - 2rD_P \cos\alpha)^{1/2}\right]}{(R^2 + r^2 + D_P^2 - 2rD_P \cos\alpha)}\, r\,dr\,d\alpha$$

Fig. 3 Disk Source

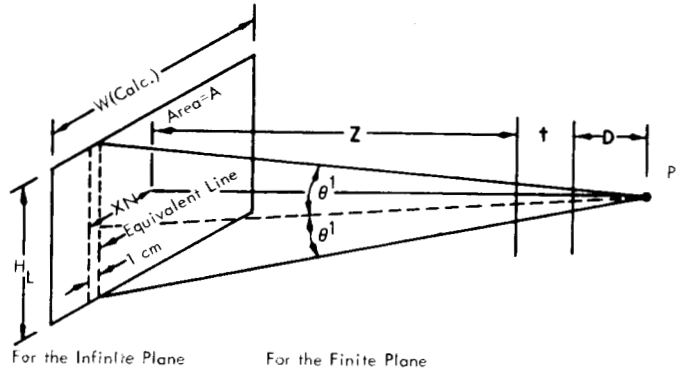

For the Infinite Plane

$$\Phi_\infty = \frac{SA}{2} E_1(\mu t)$$

For the Finite Plane

$$\Phi^1 = \frac{SA}{2\pi\sqrt{R^2 + (XN - 0.5)^2}}\left[F(\theta^1, (\mu t)^1)\right]$$

$$\Phi_{tp} = \frac{\Sigma}{N}\Phi^1$$

Fig. 4 Plane Sources

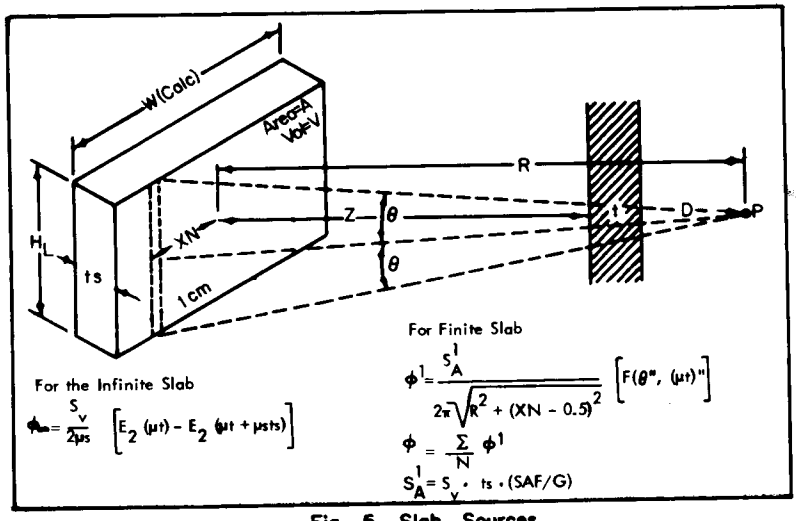

Fig. 5 Slab Sources

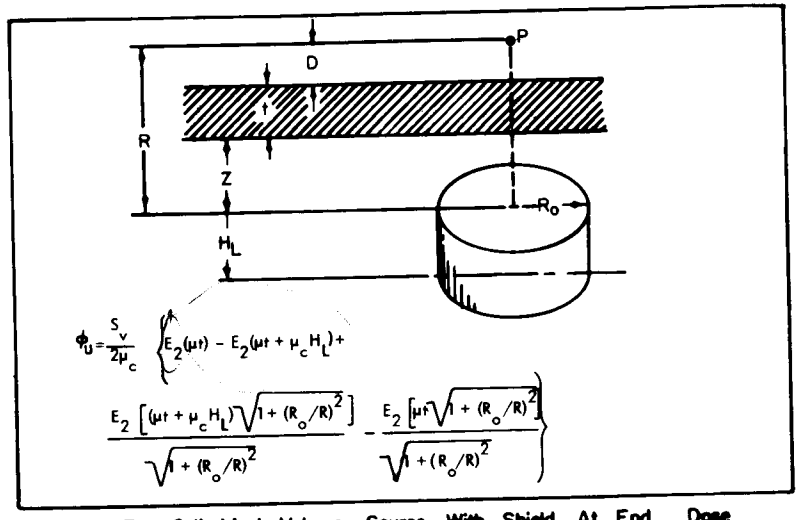

Fig. 7a Cylindrical Volume Source With Shield At End. Dose Point On Cylindrical Axis.

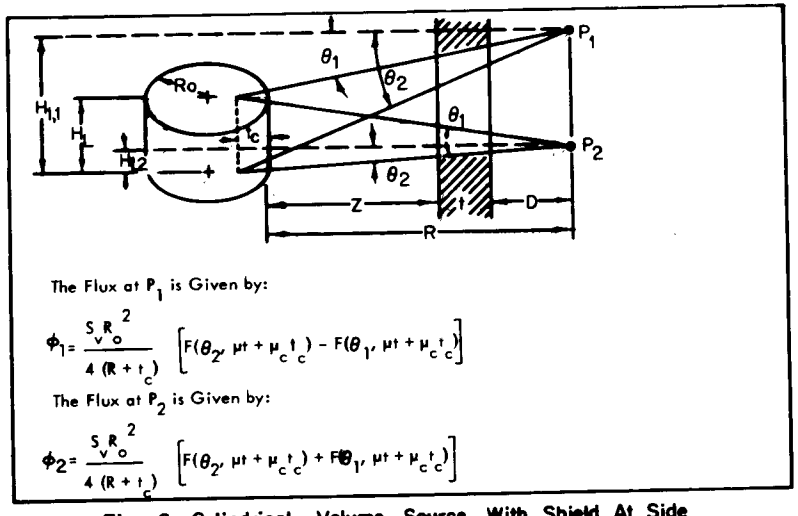

Fig. 6 Cylindrical Volume Source With Shield At Side

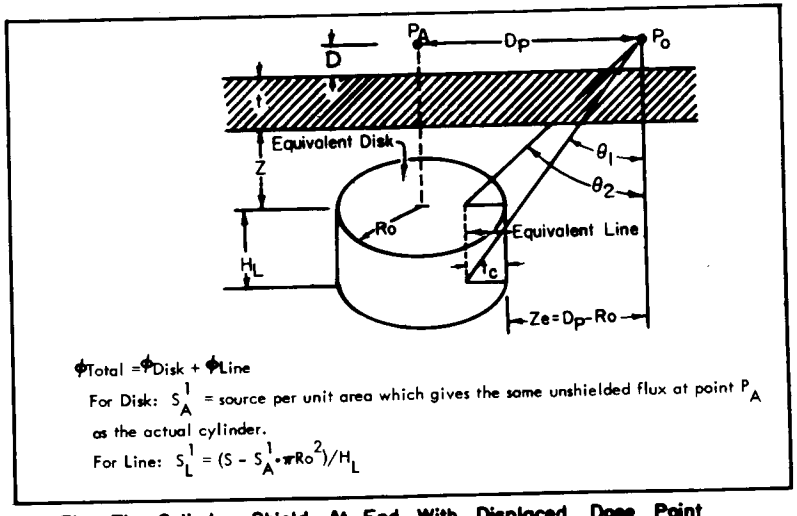

Fig. 7b Cylinder, Shield At End With Displaced Dose Point

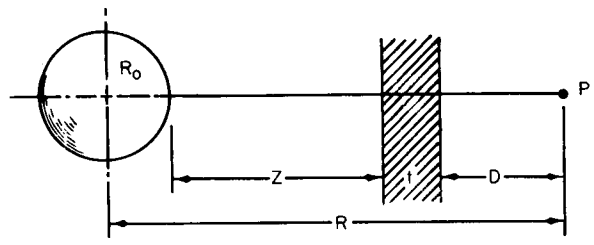

$$\phi = \frac{2}{3} S_v R_o \left\{ E_1(\mu t + \mu_c t_c) - E_1 \left[(\mu t + \mu_c t_c) \sqrt{1 + \left(\frac{R_o}{R + t_c}\right)^2} \right] \right\}$$

Fig. 8 Spherical Volume Source

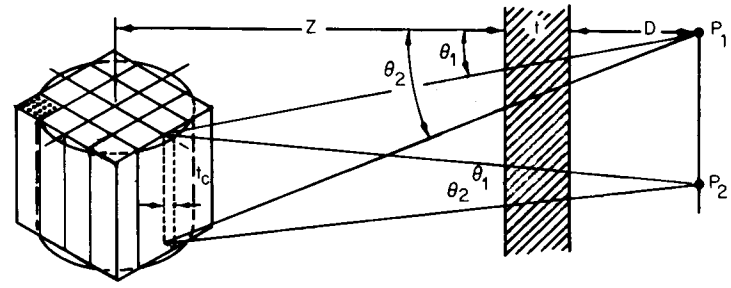

Fig 10 Rod Cluster Source

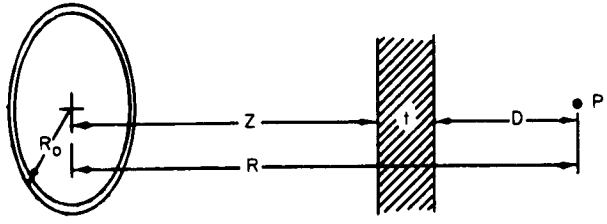

$$\phi = \frac{S_L R_o}{2(R_o^2 + R^2)} e^{-\mu t}$$

Fig 9 Ring Source

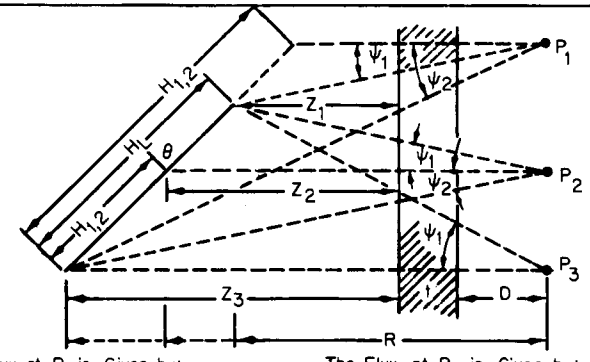

The Flux at P_1 is Given by:

$$\phi_1 = \frac{S_L}{4\pi R_1 \cos\theta} \left[F(\psi_2, \mu t) - F(\psi_1, \mu t) \right]$$

The Flux at P_2 is Given by:

$$\phi_2 = \frac{S_L}{4\pi R_2 \cos\theta} \left[F(\psi_2, \mu t) + F(\psi_1, \mu t) \right]$$

$$\phi_3 = \frac{S_L}{4\pi R_3 \cos\theta} F(\psi_1, \mu t)$$

Fig 11 Skew Line Source

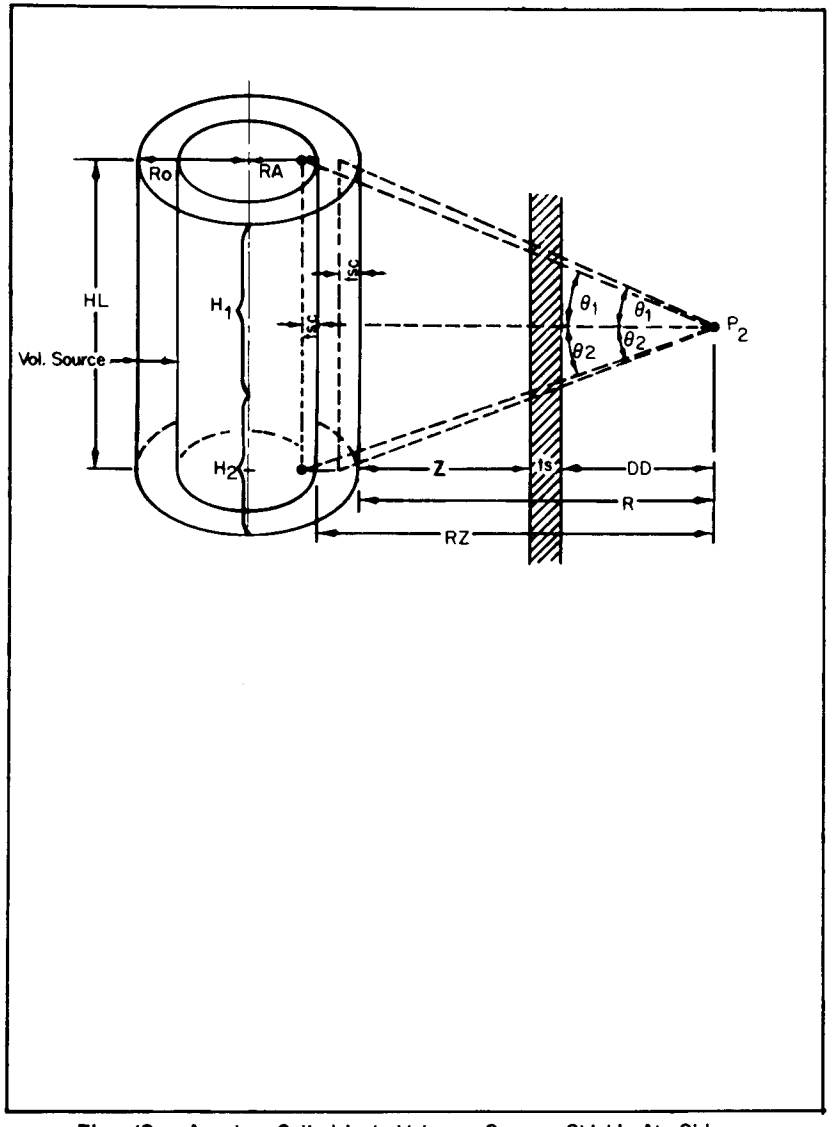

Fig. 12 Annular Cylindrical Volume Source, Shield At Side

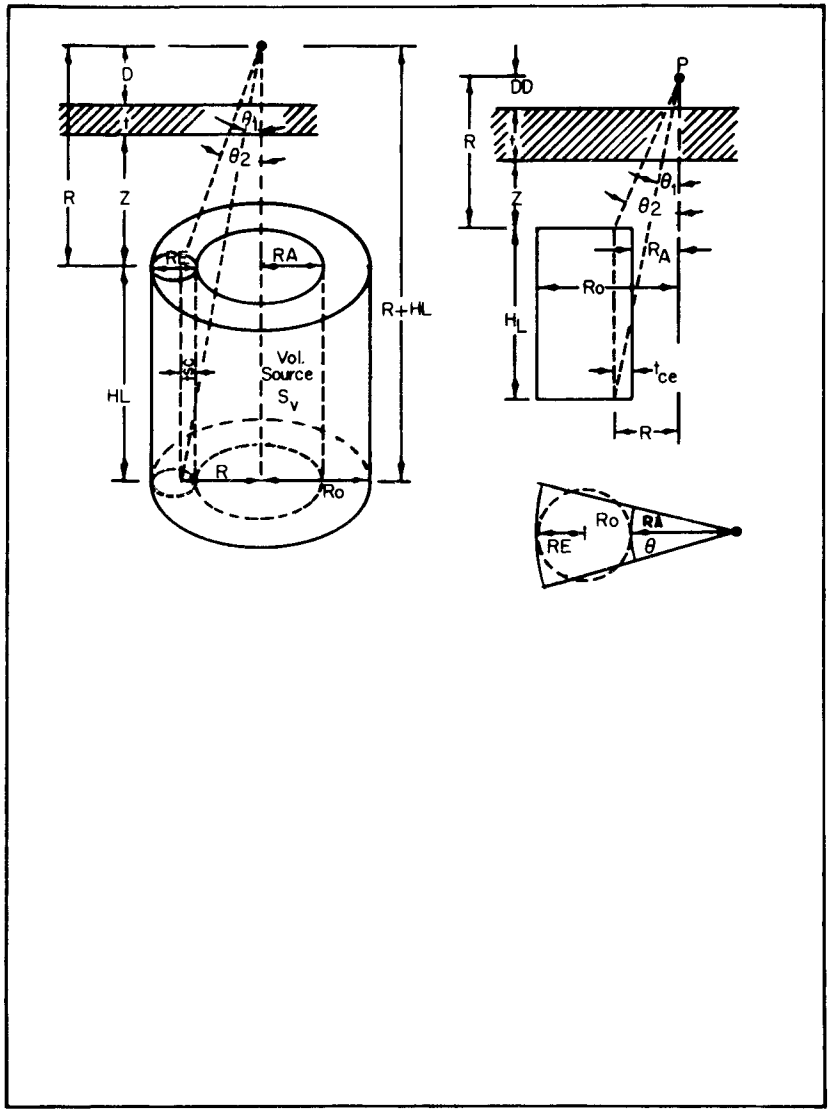

Fig. 13 Annular Cylindrical Volume Source, Shield At End

2.2 "Buildup Factors"

For any specific instrument for gamma-ray detection and measurement at any location, and with a given amount of shielding between the source and the instrument, its actual response may be considered a result of all the gamma rays, and its ideal response a result of the primary or uncollided gamma rays only. The ratio of these two responses is the buildup factor pertaining to the given instrument and to its location and amount of shielding.

The total dose rate D(R), including buildup, is given by the expression:

$$D(R) = 5.76 \times 10^{-5} \frac{\mu_a}{\rho} E_o \phi_o(R,t) B(E_o, \mu t), \text{ in rads/hr,}$$

where

E_o = photon energy of source, Mev,

(μ_a/ρ) = energy absorption mass attenuation coefficient for material in which dose is to be calculated, cm^2/g,

$\phi_o(R,t)$ = calculated uncollided photon flux, photons/cm^{-2} sec^{-1}

$B(E_o,\mu t)$ = dose-buildup factor for a given initial energy E_o and shield thickness μt for a given shield material.

The data of the SDC program incorporates two types of dose-buildup factors: "point-isotropic" and "plane-collimated." If the source is embedded in or immediately adjacent to the shield, the point-isotropic buildup factor is used. If a small (in linear dimensions) source is far from the shield, so that the radiation is nearly collimated, the plane-collimated buildup factor is used. In case the sources are spread over a large surface near the shield but not on it, an integration over the entire surface must be made.

To decide whether the point-isotropic or plane-collimated buildup factor is to be used, it is necessary to define the principal cone of radiation. This cone, the apex of which is at the outer shield surface, includes all rays through the shield for which $\mu\ell \leq \mu t + 1$, t being the shield thickness, μ the attenuation coefficient, and ℓ the length of ray through the shield. This cone is shown in the sketch below. Plane-

collimated buildup factors are used if all the radiation incident on the shield within the base of this cone arrives at an angle to the shield-normal no greater than the cone half-angle. Expressed mathematically, if

$$\frac{a}{d-t} < \frac{2\mu t + 1}{\mu t} ,$$

and

$$d > t ,$$

use the plane-collimated buildup factor. In all other cases where either or both of the above requirements are not met, then use the point-isotropic buildup factor.

In these expressions

d = distance from source array to shield,

a = maximum radius of source array, measured perpendicular to d,

t = shield thickness.

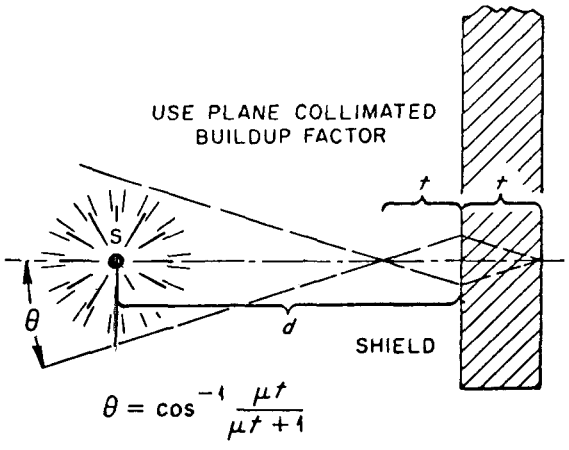

Pictorial Representation
of Principal Cone of Radiation

The SDC program incorporates an integrated averaging technique for buildup factors for all surface, volume, and linear sources. The buildup factors are weighted in terms of attenuation distance and uncollided flux from each elemental length or area. Elemental volume is not used since volume sources are reduced to equivalent line or area sources using the appropriate self-absorption factors or exponents. In this way the calculated buildup factors are slightly higher than would be calculated by using the minimum perpendicular μt distance. On the other hand, we have not taken in consideration the effects of "short circuiting" and gamma rays which enter a finite shield at an angle to the surface. In other words, the averaging technique for a finite shield is accomplished in the same way as that for an infinite medium.

For example, the effective value of the buildup factor for a line source is obtained by finding the flux-averaged value of $\mu t \sec \theta'$ and looking up the buildup factor at this value. This would be done as follows:

Given a line source of length H_L, divide this line source into increments $\Delta \ell$ which are assumed to be point sources from which the flux would be:

$$\Delta \phi = \frac{S_L \Delta \ell \, e^{-t \sec \theta'}}{4\pi (R \sec \theta')^2} \quad .$$

From this we can get the flux-averaged value of $(\mu t)_B$ from:

$$(\mu t)_B = \frac{\sum_n (\mu t)_n \Delta \phi_n}{\sum_n \Delta \phi_n}$$

$$(\mu t)_B = \frac{\sum_n \frac{(\mu t)_n S_L \, \Delta\ell \, e^{-(\mu t)_n \sec \theta_n}}{4\pi(R \sec \theta_n)^2}}{\sum_n \frac{S_L \, \Delta\ell \, e^{-(\mu t)_n \sec \theta_n}}{4\pi(R \sec \theta_n)^2}} ,$$

$$= \frac{\sum_n \frac{(\mu t)_n \, e^{-(\mu t)_n \sec \theta_n}}{(\sec \theta_n)^2}}{\sum_n \frac{e^{-(\mu t)_n \sec \theta_n}}{(\sec \theta_n)^2}} .$$

Similar averaging techniques are also performed for surface sources.

2.3 Self-Absorption Parameters for Cylinders and Spheres

Several graphs were taken from reference 4 and converted to tables or polynomials for use in the program. The curve in Fig. 14, which gives the cylinder self-absorption exponent $\mu_c t_c$ as a function of $\mu_c R_o$ for $R/R_o \geq 10$, was fitted by the following polynomial:

$$\mu_c t_c = 7.794289*10^{-4}\, x^3 - 3.3071095*10^{-2}\, x^2 + 5.6308275*10^{-1}\, x + 3.4685315*10^{-2} ,$$

where

$$x = \mu_c R_o .$$

In those cases where $R/R_o \geq 10$, it becomes necessary to use Figs. 15 and 16 to obtain the cylinder self-absorption exponent $\mu_c t_c$. In this case, obtain $\mu_c t_c/m$ from Fig. 15, obtain m from Fig. 16, and solve for t_c. These graphs were converted into tabular form and are listed here as Tables 7 and 8 (see end of Sect. 4 for all tables).

The curve in Fig. 17, which gives the spherical self-absorption exponent $\mu_c t_c$ as a function of $\mu_c R_o$ for $\mu_c R_o \geq 1$, was fitted by the following polynomial:

$$\mu_c t_c = 9.4150918*10^{-7}\ x^5 - 9.6912089*10^{-5}\ x^4 + 3.7782781*10^{-3}\ x^3$$

$$- 6.9951235*10^{-2}\ x^2 + 6.7588203*10^{-1}\ x - 7.8635556\ x\ 10^{-4}\ .$$

In those cases where $R/R_o < 1$, it becomes necessary to use Fig. 18 to obtain the self-absorption distance t_c and the self-absorption exponent $\mu_c t_c$ for the spherical volume source. The graph plots the ratio of t_c/R_o as a function of $\mu_c(R_o + R)$ for several values of R/R_o. This graph was converted into tabular form and is listed here as Table 6.

In several cases, especially those involving surface intensities, it was necessary to resort to self-absorption correction factors obtained in a manner different from those just reported for cylinders and spheres. The general expression for self-absorption is as follows:

Let I_o = intensity of radiation received by the detector, with no source self-absorption. The term I represents the actual intensity received by the detector, with source self-absorption; then $F_\rho(\mu R_o) = I/I_o$ = self-absorption factor, with

$$F_\rho(X) = \frac{\Gamma(\rho + 1)}{\Gamma(3/2)\Gamma(\rho + 1/2)} \int_0^{\pi/2} e^{-2X \cos\theta} \sin^{2\rho}\theta\, d\theta\ ,$$

where

$\rho \equiv 1/2$ for linear (slab) source,

$\rho \equiv 1$ for cylindrical source,

$\rho \equiv 3/2$ for spherical source,

$X = \mu R_o$,

μ = linear absorption coefficient,

R_o = radius of cylinder or sphere or half-thickness of slab.

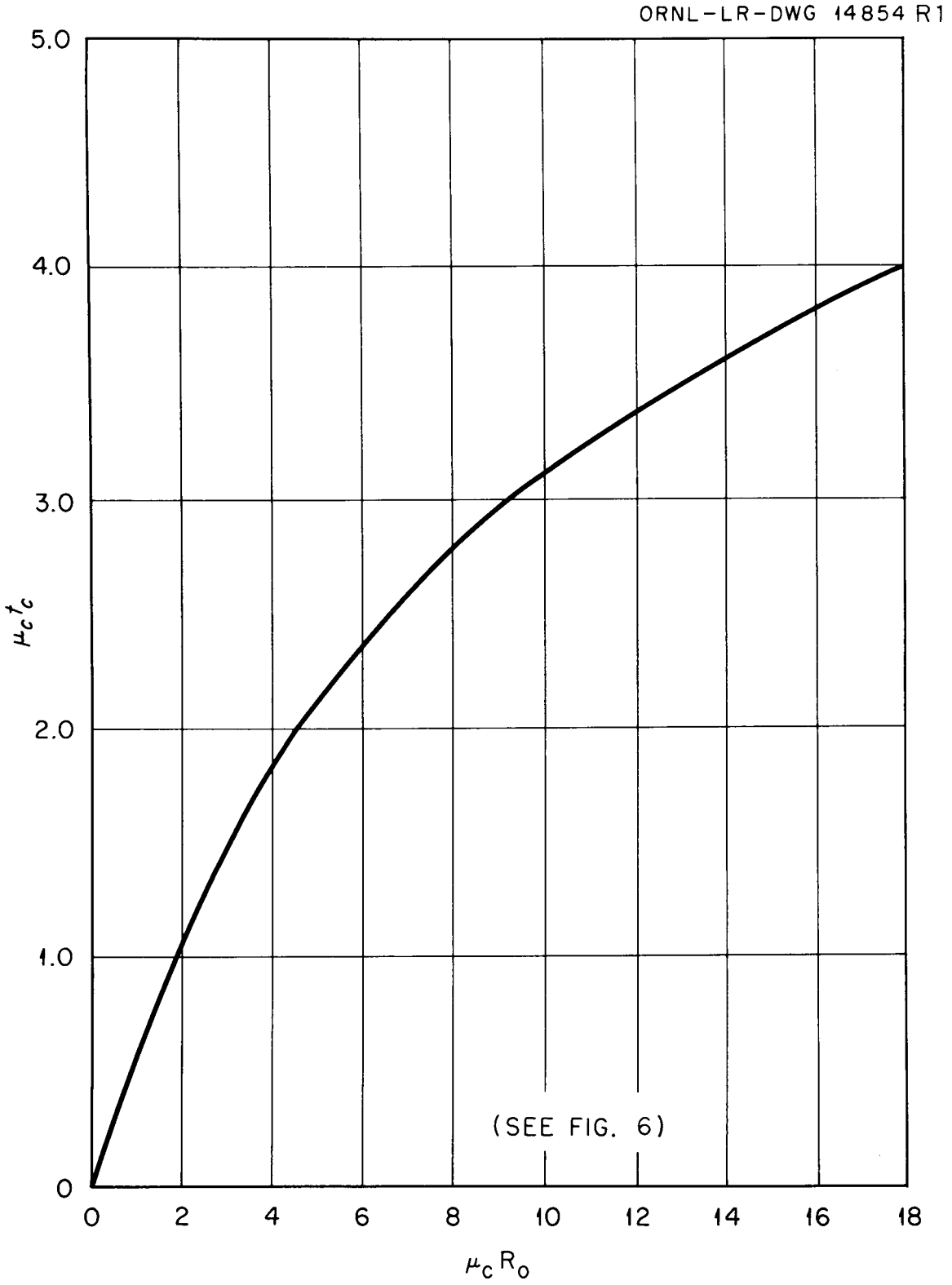

Fig. 14. Cylinder Self-Absorption Exponent $\mu_c t_c$ as a Function of $\mu_c R_o$ for $R/R_o \geq 10$

t a

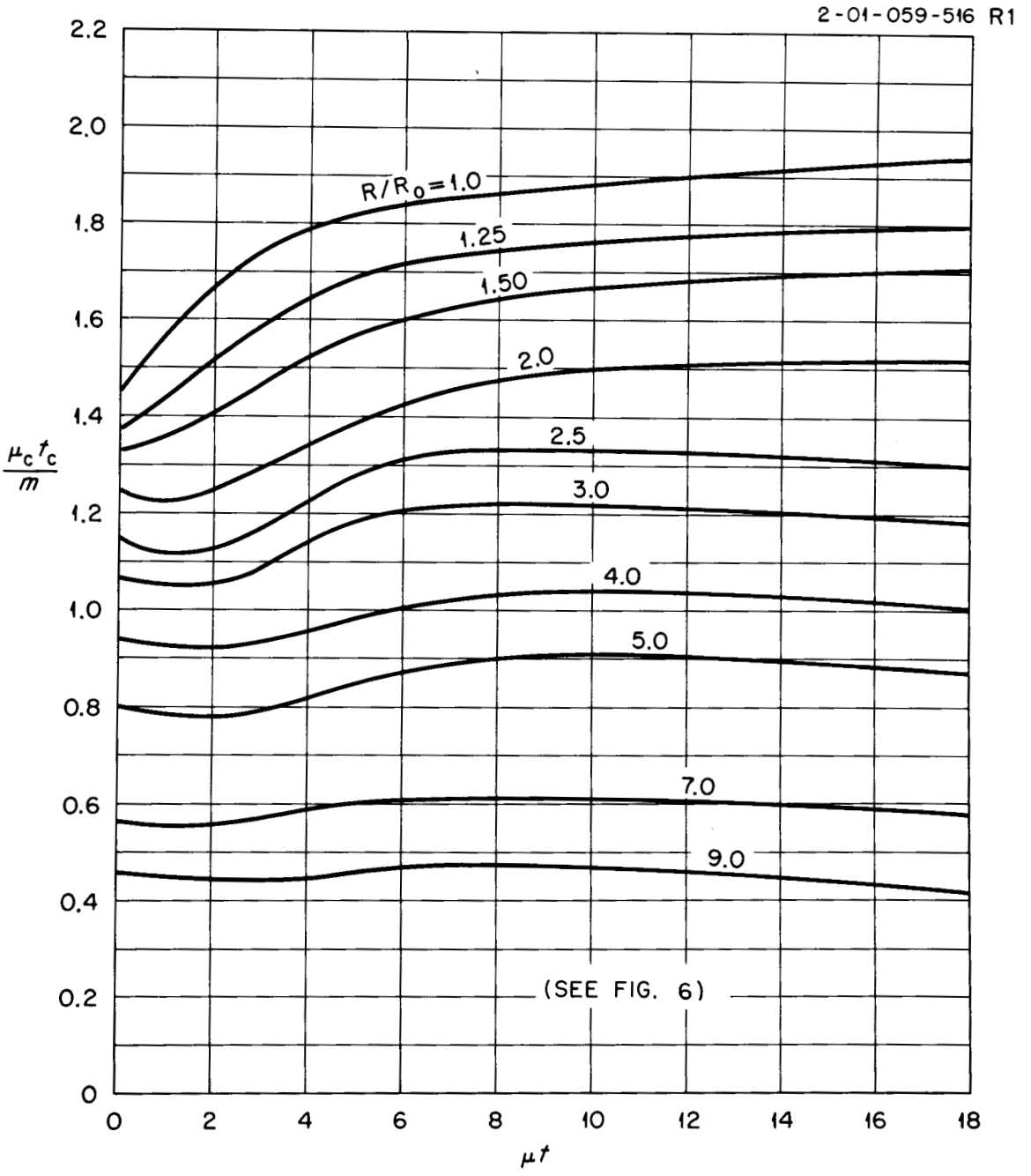

Fig. 15. Cylinder Self-Absorption Exponent $\mu_c t_c$ Divided by Parameter m (refer to Fig. 16) as a Function of Number of Shield Relaxation Lengths μt for $R/R_o < 10$

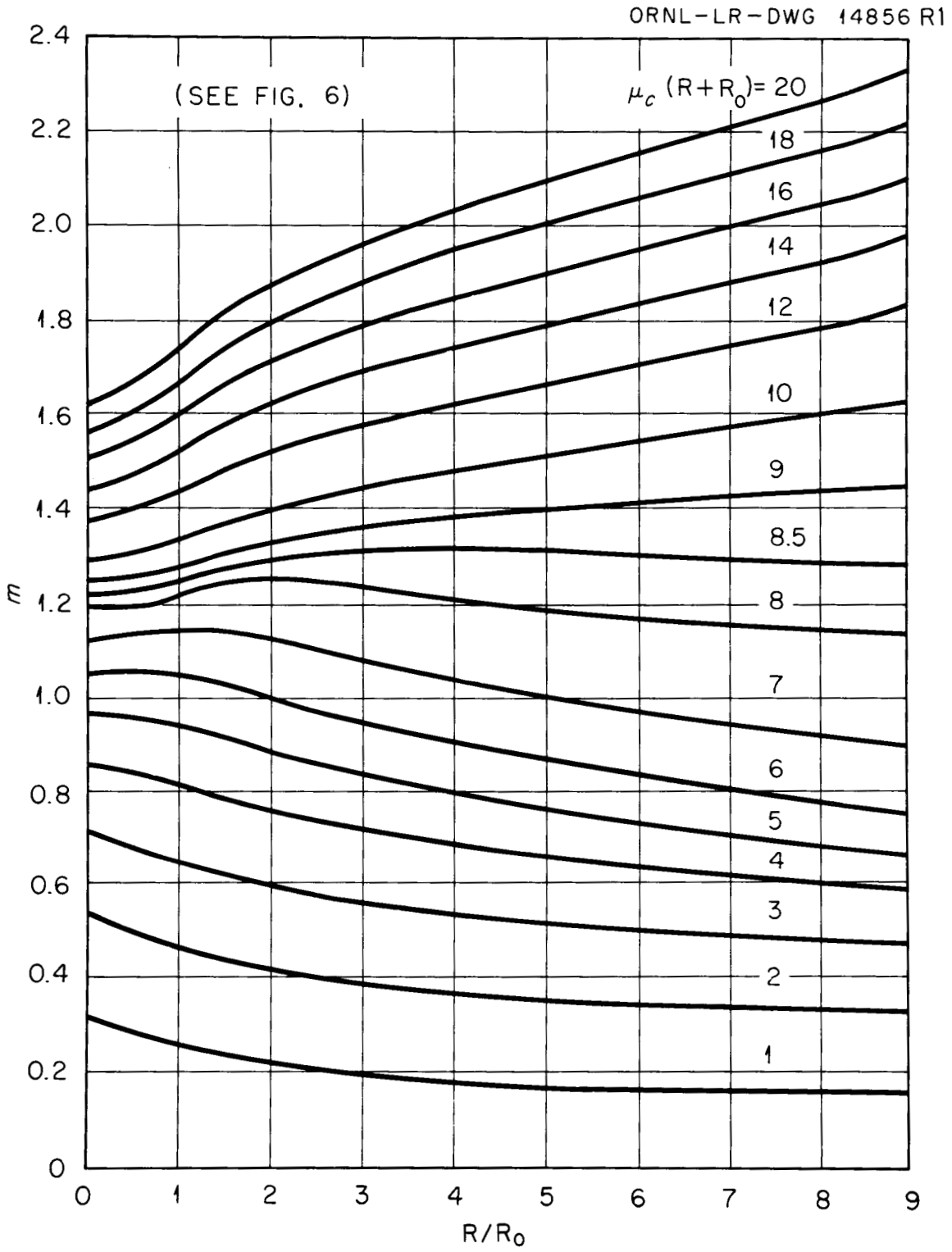

Fig. 16. Cylinder Self-Absorption Parameter m as a Function of R/R_0 for Various Values of $\mu_c(R + R_0)$

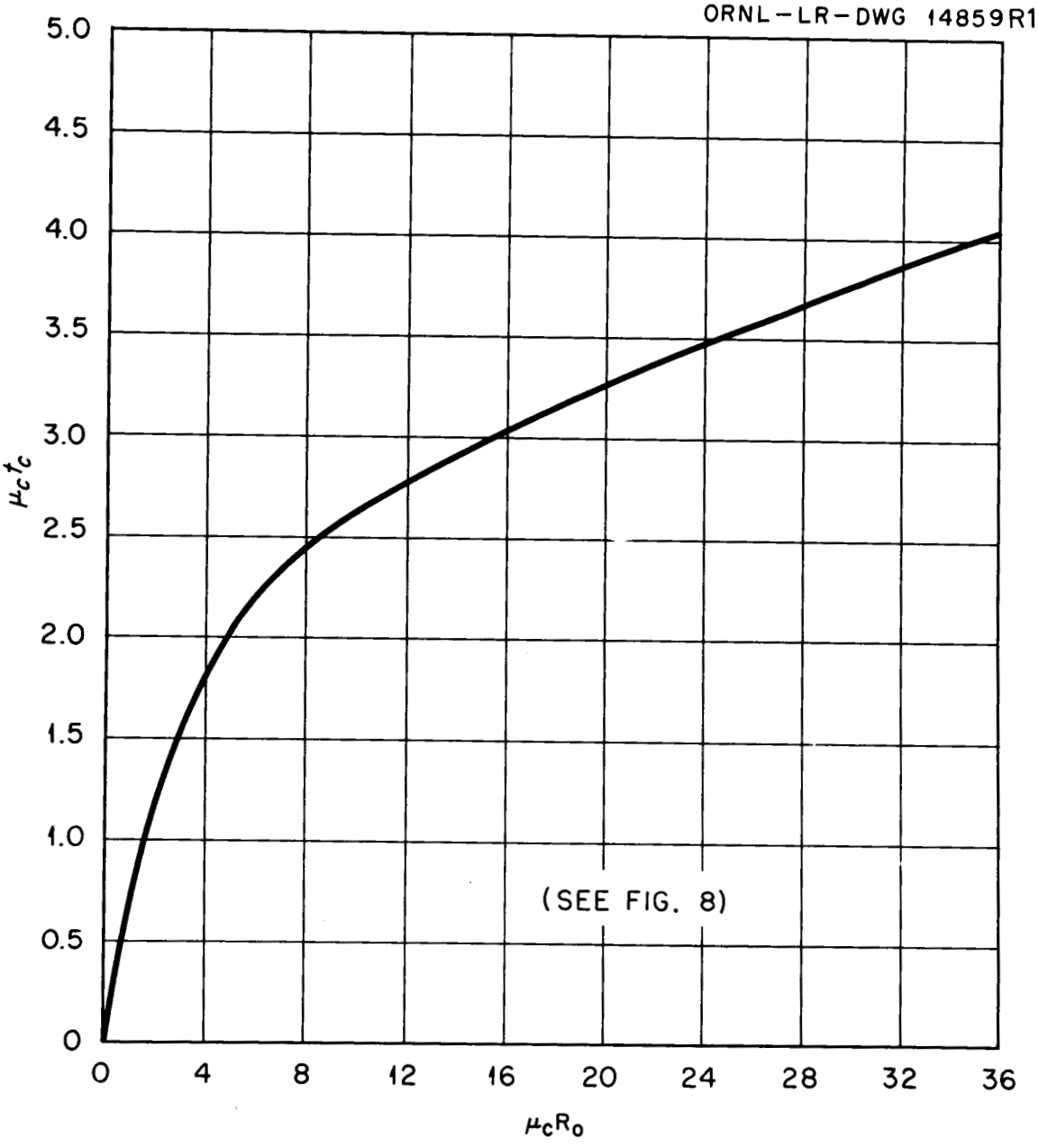

Fig. 17. Sphere Self-Absorption Exponent $\mu_c t_c$ as a Function of $\mu_c R_o$ for $R/R_o \geq 1$

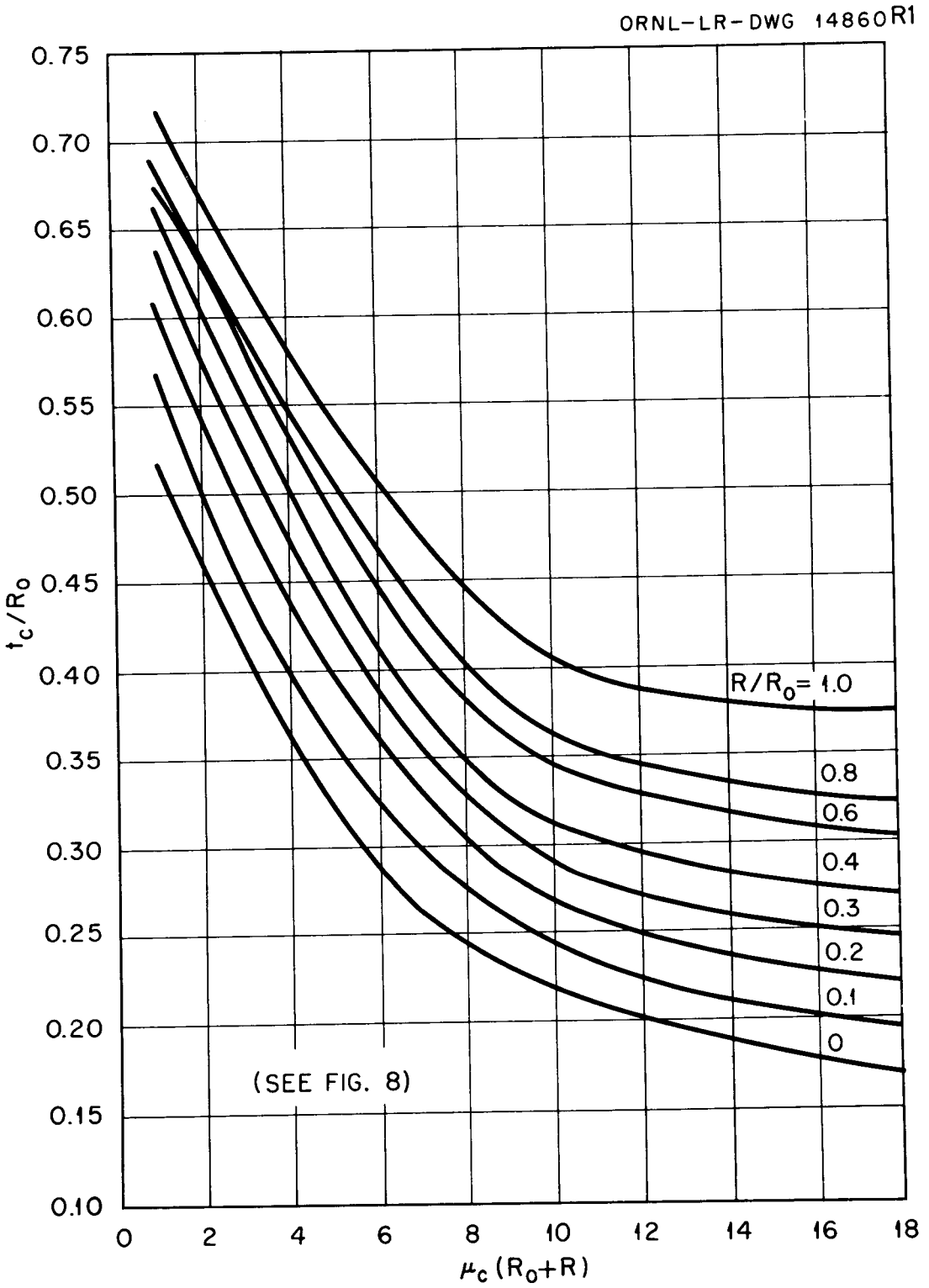

Fig. 18. Ratio of Self-Absorption Distance to Radius t_c/R_o for a Sphere as a Function of $\mu_c(R_o + R)$ for $R/R_o < 1$

3. EVALUATION OF MISCELLANEOUS FUNCTIONS

3.1 Exponential Integral $E_n(x)$

The exponential integrals $E_1(\mu t)$ and $E_2(\mu t)$ were used in the calculation of the flux for the disk source, for infinite slab source, the cylindrical volume source with shield at the end, and the spherical volume source. Subroutine E1E2 computes the necessary values. The expressions evaluated are as follows:

$$E_n(X) = X^{n-1} \int_X^{\infty} \frac{e^{-x}}{x^n} dx \quad .$$

For n = 1, Burington's[6] integral No. 307 was used to evaluate

$$E_1(\mu t) = \int_{\mu t}^{\infty} \frac{e^{-x}}{x} dx \ .$$

$$A(x) = \int \frac{e^{ax}}{x} dx = \log x + ax + \frac{ax^2}{2 \cdot 2!} + \frac{ax^3}{3 \cdot 3!} + \cdots \quad .$$

With a = -1, it becomes:

$$A(x) = \int \frac{e^{-x}}{x} dx = \log x - x + \frac{x^2}{2 \cdot 2!} - \frac{x^3}{3 \cdot 3!} + \cdots \quad . \qquad \text{(A)}$$

For $\mu t < 1$:

$$E_1(\mu t) = \underbrace{\int_{\mu t}^{1.0} \frac{e^{-x}}{x} dx}_{\text{(B)}} + \underbrace{\int_{1.0}^{\infty} \frac{e^{-x}}{x} dx}_{\text{(C)}} \quad ,$$

where the expression in (B) is evaluated by the series in (A) as

$$\int_{\mu t}^{1.0} \frac{e^{-x}}{x} dx = [A(1) - A(\mu t)] \ ,$$

and expression (C) is evaluated by the approximations in (D) below:

Hastings approximation:[7]

$$-E_i(-x) = \int_x^\infty \frac{e^{-t}}{t}\, dt \quad .$$

For $1 \leq x < \infty$:

$$-E_i(-x) = \frac{e^{-x}}{x}\left[\frac{a_0 + a_1x + a_2x^2 + x^3}{b_0 + b_1x + b_2x^2 + x^3}\right] \quad .$$

For $\mu t \geq 1.0$, then

$$E_1(\mu t) = \int_{\mu t}^\infty \frac{e^{-x}}{x}\, dx \quad ,$$

$$E_1(\mu t) = \frac{e^{-\mu t}}{\mu t}\left[\frac{a_0 + a_1\mu t + a_2(\mu t)^2 + (\mu t)^3}{b_0 + b_1\mu t + b_2(\mu t)^2 + (\mu t)^3}\right] \quad , \qquad \text{(D)}$$

where

$$a_0 = 0.23729050 \ , \qquad b_0 = 2.47663307 \ ,$$
$$a_1 = 4.53079235 \ , \qquad b_1 = 8.66601262 \ ,$$
$$a_2 = 5.12669020 \ , \qquad b_2 = 6.12652717 \ .$$

For $\mu t \geq 1.0$, the calculation is done by (D) directly.
For $n = 2$, Burington's[6] integral no. 308 was used:

$$B(x) = \int \frac{e^{ax}}{x^n}\, dx = \frac{1}{n-1}\left[-\frac{e^{ax}}{x^{n-1}} + a\int \frac{e^{ax}}{x^{n-1}}\, dx\right] \qquad n > 1 \ .$$

With $a = -1$, the expression becomes

$$B(x) = \int \frac{e^{-x}}{x^2}\, dx = \left[-\frac{e^{-x}}{x} - \int \frac{e^{-x}}{x}\, dx\right] \quad ,$$

and

$$E_2(\mu t) = \int_{\mu t}^{\infty} \frac{e^{-x}}{x^2}\, dx = \left[\frac{e^{-\mu t}}{\mu t} - \int_{\mu t}^{\infty} \frac{e^{-x}}{x}\, dx\right] \mu t \quad ,$$

or

$$E_2(\mu t) = \left[\frac{e^{-\mu t}}{\mu t} - E_1(\mu t)\right] \mu t \quad .$$

3.2 Function $F(\theta,\mu t)$

The F function is used in computing the flux for the following source geometries: line, plane, slab, cylinders with shield at side, and skew line. The expression

$$F(\theta,\mu t) = \int_0^{\theta} e^{-\mu t \sec \theta'}\, d\theta'$$

is evaluated directly by Simpson's Rule in Function F routine.

3.3 Functions Fitted to Curves

A least-squares polynomial was fitted to certain curves used in the code. These are described in Sect. 2.3.

3.4 Riemann Function

In several of the geometry options (as in SLAB, CYLSAS, and SPHERE), numerical integration is accomplished by use of a function subroutine that uses midpoint procedure with preferential interval placement. This function demands a functional value f at a specified number of points, estimates the second derivative of f at each point, and then places integration intervals so as to achieve the accuracy specified by the user. The integration is then done in one step.

Let f be a function defined on the interval (a,b). Suppose it is required to integrate f over the interval (a,b) with the absolute error not to exceed some number E. We first divide (a,b) into n equal subintervals and evaluate f at the midpoint of each of the subintervals. Having done this we can estimate $\left/\frac{d^2f}{dx^2}\right. = D^2f$ at each of these points by the formula:

$$D^2f(y) \approx \frac{f(y+h) - 2f(y) + f(y-h)}{h^2} ,$$

where h is the length of each of the subintervals, and y is the midpoint of a typical subinterval.

If we were to do the integration by the midpoint procedure using the present subintervals, our error would be $n(1/24)[D^2f(\lambda)]h^3$. To see this, let (x_1,x_2) be a typical subinterval, and let y be its midpoint. Using Taylor's Formula we see that

$$\int_{x_1}^{x_2} f\,dx = \int_{y}^{x_2} f\,dx - \int_{y}^{x_1} f\,dx$$

$$= f(y)[(x_2 - y) - (x_1 - y)] + Df(y)\,\frac{(x_2 - y)^2 - (x_1 - y)^2}{2!}$$

$$+ \frac{D^2f(\xi_2)(x_2 - y)^3 - D^2f(\xi_1)(x_1 - y)^3}{3!}$$

for some ξ_2 such that $x_2 \geq \xi_2 \geq y$, and for some ξ_1 such that $y \geq \xi_1 \geq x_1$. Recalling that $x_2 - y = h/2$ and that $x_1 - y = -h/2$, we find that for some ξ such that $\xi_2 \geq \xi \geq \xi_1$,

$$\int_{x_1}^{x_2} f dx = f(y)\,h + D^2f(\xi)\,\frac{h^3}{24}$$

which gives the result we stated for some λ such that $a \leq \lambda \leq b$. The desired accuracy is achieved if the magnitude of the error in

each of the present subintervals does not exceed E/n. We shall therefore again subdivide each subinterval that has too large an error into a smaller subinterval of length h_1, where h_1 is determined as follows:

It is clear that in each new subinterval of length h_1 our error must not exceed $E/[n(h/h_1)]$. Since the absolute error in each subinterval using the midpoint procedure varies roughly as the third power of the length of the interval (the second derivative of the function remaining reasonably constant), we choose h_1 by the formula:

$$\left(\frac{h_1}{h}\right)^3 = \frac{E/[n(h/h_1)]}{e} ,$$

where

$$e = D^2f(\xi)\,\frac{h^3}{24}$$

whence

$$h_1 = h[(E/n)/e]^{1/2} .$$

In the program, h_1 is chosen by dividing h by the smallest odd integer greater than or equal to $1/[(E/n)/e]^{1/2}$ so that the previously computed values of the function can be used in the integration.

The subprogram RIEMAN is called as a part of an arithmetical statement in FORTRAN II language. Example:

F = RIEMAN (A1, A2, N, EPS, II) ,

where A1 and A2 are the lower and upper bounds for the integration, respectively. N is the number of points at which the program is to estimate the second derivative of the function and decide upon new subinterval lengths. $N \geq 3$. EPS is the absolute limit of error for the integration. II is an index to be passed on to the function subprogram VALUE (X,II), which RIEMAN calls in turn to evaluate the function at each point.

As mentioned above, RIEMAN calls VALUE (X,II) to evaluate the function at each point. VALUE (X,II) must be a FORTRAN II function subprogram supplied by the user.

The integer N supplied to RIEMAN is important. For most functions, over a reasonably short interval, N = 10 is sufficient. If, however, the function is badly behaved in the interval, or if the interval is very long, N should be increased accordingly.

Because of roundoff, RIEMAN can rarely eliminate relative errors smaller than 1×10^{-6}.

4. DATA LIBRARY UTILIZATION

A library of data is available with SDC. Unless otherwise specified, the data was taken from Sect. 7-3 of reference 1. The data is written as alphanumeric information and may easily be changed by the user. It is punched into cards and made a part of the work deck. Input is accomplished through Subroutine TABLES. Values may be changed at will. However, if the tables of data are either reduced or enlarged in size, Subroutine TABLES must be recompiled with the new parameters. Dimension statements would need to be changed in every routine.

Each item of data is described in this section in the order in which it is read. Number formats are explained in Sect. 5. The items are:

1. E, source energies, 12 values ranging from 0.1 to 10.0 Mev. They are written as Format (12F6.4), twelve possible fields, XX.XXXX. All energy-dependent data in the library are tabulated at these energies.
2. IBM, an integer (I2) denoting number of materials in the library. Currently, data for 14 materials are supplied:

Number Code	Material	Density, ρ
1	Water	1.0
2	Aluminum	2.7
3	Iron	7.87
4	Lead	11.34
5	Uranium	18.6
6	Ordinary concrete	2.35
7	Barytes concrete	3.46
8	Magnetite concrete	3.62

Number Code	Material	Density, ρ
9	Ferrophos concrete	4.68
10	Glass (plate)	2.67
11	Glass (3.2 density, lead)	3.27
12	Glass (6.2 density, lead)	6.22
13	Zinc bromide	2.61
14	Air	0.00129
15-17	Optional	

3. GMU, total linear attenuation coefficients μ, cm^2/g. (See Table 1, page 7-62 of reference 1). Values of μ are given for each material, IBM, at the energy points, E, indicated in item 1 above. For each material, two cards are punched, at energy values 1 through 6 on card 1, 7 through 12 on card 2. They are written as Format (6F11.7), six fields on a card, XXXX.XXXXXXX.

4. T, tissue. The energy absorption mass attenuation coefficients μ_a/ρ, (cm^2/g) for the average composition of man, is read as a special case, Format (6F11.7), and is not counted as one of the materials in IBM. However, tabulation is accomplished as in GMU, item 3 above. If the user wishes to calculate dose rates in a material other than tissue, he may substitute the corresponding μ_a/ρ values for the new material.

5. TMB, eight μt values for buildup factor tabulation, where μ stands for the attenuation coefficient and t for the thickness of shield. They are written by Format (16F3.1), eight fields, XX.X.

6. B, dose buildup factor by material, thickness of shield times attenuation coefficient (TMB), for point-isotropic source energies (E). (See Table 4, page 7-67 of reference 1). They are written as Format (I2, 9F5.2) and read as M(K), ((B(I,J,K), I*=1,12), J = 1,8), K = 1, IBM: the number

*Exception to the format: B is defined by the subroutine to be 1.0 at the first three energy points - 0.1, 0.15, and 0.2.

assigned to the material as in item 2 (punched in the first two columns of each card), and then for that material at each μt in item 5 and at each energy point in item 1 buildup factors are tabled. Each card consists of the number of the material, XX, and 9 fields, each written as XXX.XX.

7. TM17, μt values selected for use in tabulation of self-absorption exponent divided by the self-absorption parameter $\mu_c t_c/m$ as a function of μt for $R/R_o > 10$ (Fig. 15). They are written as Format (16F3.1), 16 values of XX.X on one card.

8. RRO, R/R_o, as depicted in Fig. 15. R is the linear separation between the source element and receiver, and R_o is the radius of the volume source. Twenty-five values are tabled by Format (18F4.2), 18 values on one card, the remaining seven on a second card. In the four-column field, each R/R_o value is written as XX.XX, with no decimal punched.

9. TMM17, self-absorption exponent divided by self-absorption parameter $\mu_c t_c/m$ in Fig. 15. Points are entered for a given R/R_o (25, as in item 8 above) at each μt (16, as in item 7) for a total of 16 x 25 values. They are punched as Format (16F4.2), one card for each R/R_o point, a value of $\mu_c t_c/m$ for each of the 16 μt points on the card. The tables are read as TMM17 (I,J), I=1,16), J=1,25. In the four-column field they are written as XX.XX, with no decimal punched.

10. ZAM, $\mu_c(R + R_o)$ in Fig. 16. Sixteen values are tabled as Format (16F3.1), XX.X.

11. ZM, self-absorption parameter m for a cylinder as a function of its radius R_o for $R/R_o < 10$, as in Fig. 16. ZM is tabled as Format (16F4.3), is punched in a four-column field as X.XXX, with the decimal point not punched. It is read by the code as: ZM (I,J), I=1,16), J=1, 25. At each R/R_o, a card is punched with 16 values of ZM, X.XXX, tabulated at each of the ZAM points in item 10 above.

12. X22, $\mu_c(R + R_o)$, as in Fig. 18. Eighteen values are tabled as Format (18F4.0). The values are: 1, 2, 3, 4, 5, 6, 7, 8, 9, 10, 11, 12, 13, 14, 15, 16, 17, 18 - each punched in the rightmost columns of a four-column field, with no decimal punched.

13. Y22, R/R_o in Fig. 18. There are eight points, ranging in value from 0.0 to 1.0, tabled by Format (8F4.1), XXX.X.

14. Z22, t_c/R_o, ratio of self-absorption distance to radius for a sphere as a function of distance to its center, $R + R_o$, multiplied by μ_c for $R/R_o < 1$. The values are punched by Format (18F4.4), .XXXX, with the decimal not punched. They are read as Z22 (I,J), I=1,18), J=1,8. In other words, for each of eight points of Y22 (as in item 13), at 18 points of X22 (as in item 12), values of Z22 are read. They are punched on eight cards, 18 values on each card.

15. RHO, material density for use in rod-cluster geometry. A density for each material is entered as Format (10F7.5), XX.XXXXX, with no decimal punched.

16. BR, dose buildup factor by material, thickness of the shield times attenuation coefficient, for plane-collimated source energies as in Table 5, page 7-68 of reference 1 and in other sources. The values are tabled by Format (9F5.2), XXX.XX, with no decimal punched. They are entered as follows: one card for each of the eight values of TMB in item 5, nine values per card corresponding to energies 4 through 12 in item 1. The build-up factors for the three lowest energies (0.1, 0.15, and 0.2) for each material and at each TMB, is defined to be 1.0 by the code.

17. M and RH - a table with two parameters in Format (8(I2,F7.5)), material number and density arranged in ascending order according to the value of the density for a table lookup in the rod-cluster subroutine to compute μ_{vol}.

The SDC data library consists of data compiled by users at ORNL during the several years that this code was being developed. No claim is made by the authors that the data is necessarily the most recent or the most accurate available at present, and the user is urged to change any data as the need arises. The techniques for making these changes have been described earlier in this section. The library is listed in the following tables. These tables, with the information they contain are:

Table 1. Energies

Table 2. Energy Absorption Coefficient (μ_a/ρ) for Tissue

Table 3. Total Linear Attenuation Coefficient (μ) for Each Material

Table 4. Dose Build-up Factors - Point Isotropic Source vs Energy and μt

Table 5. Dose Build-up Factors - Plane Collimated Source vs Energy and μt

Table 6. (The function given by Fig. 18.) Ratio of Self-Absorption Distance to Radius t_c/R_o for a Sphere as a Function of $\mu_c(R_o + R)$ for $R/R_o < 1$

Table 7. (The function given by Fig. 15.) Cylinder Self-Absorption Exponent $\mu_c t_c$ Divided by Parameter m as a Function of Number of Shield Relaxation Lengths μt for $R/R_o < 10$

Table 8. (The function given by Fig. 16.) Cylinder Self-Absorption Parameter m as a Function of R/R_o for Various Values of $\mu_c(R + R_o)$

SDC DATA LIBRARY

TABLE 1

ENERGIES

1	2	3	4	5	6	7	8	9	10	11	12
0.1	0.15	0.2	0.25	0.5	1.	2.	3.	4.	6.	8.	10.

TABLE 2

MU(A)/RHO FOR TISSUE

1	2	3	4	5	6
0.0271	0.0282	0.0293	0.0303	0.0320	0.0300

7	8	9	10	11	12
0.0256	0.0220	0.0206	0.0182	0.0168	0.0160

TABLE 3

GMU AT 12 ENERGY POINTS FOR EACH MATERIAL

MATERIAL 1

1	2	3	4	5	6
1.6700E-01	1.4900E-01	1.3600E-01	1.2700E-01	9.6600E-02	7.0600E-02

7	8	9	10	11	12
4.9300E-02	3.9600E-02	3.3900E-02	2.7500E-02	2.4000E-02	2.1900E-02

MATERIAL 2

1	2	3	4	5	6
3.7030E-01	3.0820E-01	2.7600E-01	2.5645E-01	1.9320E-01	1.4122E-01

7	8	9	10	11	12
9.9360E-02	8.1190E-02	7.1300E-02	6.0720E-02	5.5430E-02	5.2670E-02

SDC DATA LIBRARY

TABLE 3 CONTINUED

GMU AT 12 ENERGY POINTS FOR EACH MATERIAL

MATERIAL 3

1	2	3	4	5	6
2.7038E 00	1.4384E 00	1.0847E 00	9.5892E-01	6.5081E-01	4.6767E-01
7	8	9	10	11	12
3.3326E-01	2.8375E-01	2.5938E-01	2.3894E-01	2.3187E-01	2.3108E-01

MATERIAL 4

1	2	3	4	5	6
5.9777E 01	2.0792E 01	1.0125E 01	7.0738E 00	1.6385E 00	7.7292E-01
7	8	9	10	11	12
5.1641E-01	4.7573E-01	4.7460E-01	4.9268E-01	5.1867E-01	5.5257E-01

MATERIAL 5

1	2	3	4	5	6
1.9822E 01	4.5254E 01	2.1879E 01	1.5166E 01	3.2912E 00	1.4156E 00
7	8	9	10	11	12
9.0508E-01	8.3215E-01	8.2280E-01	8.5085E-01	8.9573E-01	9.5557E-01

MATERIAL 6

1	2	3	4	5	6
3.9715E-01	3.2665E-01	2.9140E-01	2.7143E-01	2.0445E-01	1.4923E-01
7	8	9	10	11	12
1.0458E-01	8.5310E-02	7.4500E-02	6.2980E-02	5.7110E-02	5.3820E-02

SDC DATA LIBRARY

TABLE 3 CONTINUED

GMU AT 12 ENERGY POINTS FOR EACH MATERIAL

MATERIAL 7

1	2	3	4	5	6
5.8305E-01	4.7955E-01	4.2780E-01	3.9848E-01	3.0015E-01	2.1908E-01
7	8	9	10	11	12
1.5353E-01	1.2524E-01	1.0937E-01	9.2460E-02	8.3840E-02	7.9010E-02

MATERIAL 8

1	2	3	4	5	6
6.1178E-01	5.0318E-01	4.4888E-01	4.1811E-01	3.1494E-01	2.2987E-01
7	8	9	10	11	12
1.6109E-01	1.3141E-01	1.1475E-01	9.7020E-02	8.7970E-02	8.2900E-02

MATERIAL 9

1	2	3	4	5	6
7.9092E-01	6.5052E-01	5.8032E-01	5.4054E-01	4.0716E-01	2.9718E-01
7	8	9	10	11	12
2.0826E-01	1.6988E-01	1.4836E-01	1.2542E-01	1.1372E-01	1.0717E-01

MATERIAL 10

1	2	3	4	5	6
1.1240E 00	6.2500E 00	3.0150E 00	3.5300E-01	2.3400E-01	1.6500E-01
7	8	9	10	11	12
1.1800E-01	1.0200E-01	8.7000E-02	7.3000E-02	6.9000E-02	6.6000E-02

SDC DATA LIBRARY

TABLE 3 CONTINUED

GMU AT 12 ENERGY POINTS FOR EACH MATERIAL

MATERIAL 11

1	2	3	4	5	6
5.7000E 00	2.5100E 00	1.6920E 00	8.7400E-01	3.5500E-01	2.1200E-01
7	8	9	10	11	12
1.4600E-01	1.2800E-01	1.1000E-01	1.0500E-01	1.0300E-01	1.0300E-01

MATERIAL 12

1	2	3	4	5	6
2.5600E 01	1.0500E 01	6.7850E 00	3.0700E 00	8.7100E-01	4.2700E-01
7	8	9	10	11	12
2.7700E-01	2.5800E-01	2.4200E-01	2.4800E-01	2.5600E-01	2.6900E-01

MATERIAL 13

1	2	3	4	5	6
1.4097E 00	6.5120E-01	4.4390E-01	3.7500E-01	2.2460E-01	1.5740E-01
7	8	9	10	11	12
1.1160E-01	9.5100E-02	8.7100E-02	8.0800E-02	7.9000E-02	7.8700E-02

MATERIAL 14

1	2	3	4	5	6
1.9500E-02	1.7300E-02	1.5900E-02	1.4700E-02	1.1200E-02	8.4000E-03
7	8	9	10	11	12
5.7400E-03	4.6100E-03	3.9600E-03	3.2300E-03	2.8400E-03	2.6100E-03

SDC DATA LIBRARY

TABLE 4

DOSE BUILDUP FACTORS - POINT ISOTROPIC SOURCE
VS
ENERGY AND MU*T

MATERIAL 1

ENERGY MEV	MU*T -0.	1.0	2.0	4.0	7.0	10.0	15.0	20.0
0.10	1.00	1.00	1.00	1.00	1.00	1.00	1.00	1.00
0.15	1.00	1.00	1.00	1.00	1.00	1.00	1.00	1.00
0.20	1.00	1.00	1.00	1.00	1.00	1.00	1.00	1.00
0.25	1.00	3.09	7.14	23.00	72.90	166.00	456.00	982.00
0.50	1.00	2.52	5.14	14.30	38.80	77.60	178.00	334.00
1.00	1.00	2.13	3.71	7.68	16.20	27.10	50.40	82.20
2.00	1.00	1.83	2.77	4.88	8.46	12.40	19.50	27.70
3.00	1.00	1.69	2.42	3.91	6.23	8.63	12.80	17.00
4.00	1.00	1.58	2.17	3.34	5.13	6.94	9.97	12.90
6.00	1.00	1.46	1.91	2.76	3.99	5.18	7.09	8.85
8.00	1.00	1.38	1.74	2.40	3.34	4.25	5.66	6.95
10.00	1.00	1.33	1.63	2.19	2.97	3.72	4.90	5.98

MATERIAL 2

ENERGY MEV	MU*T -0.	1.0	2.0	4.0	7.0	10.0	15.0	20.0
0.10	1.00	1.00	1.00	1.00	1.00	1.00	1.00	1.00
0.15	1.00	1.00	1.00	1.00	1.00	1.00	1.00	1.00
0.20	1.00	1.00	1.00	1.00	1.00	1.00	1.00	1.00
0.25	1.00	2.75	5.28	13.05	32.38	63.16	142.78	265.23
0.50	1.00	2.37	4.24	9.47	21.50	38.90	80.80	141.00
1.00	1.00	2.02	3.31	6.57	13.10	21.20	37.90	58.50
2.00	1.00	1.75	2.61	4.62	8.05	11.90	18.70	26.30
3.00	1.00	1.64	2.32	3.78	6.14	8.65	13.00	17.70
4.00	1.00	1.53	2.08	3.22	5.01	6.88	10.10	13.40
6.00	1.00	1.42	1.85	2.70	4.06	5.49	7.97	10.40
8.00	1.00	1.34	1.68	2.37	3.45	4.58	6.56	8.52
10.00	1.00	1.28	1.55	2.12	3.01	3.96	5.63	7.32

SDC DATA LIBRARY

TABLE 4 CONTINUED

DOSE BUILDUP FACTORS - POINT ISOTROPIC SOURCE
VS
ENERGY AND MU*T

MATERIAL 3

ENERGY MEV	MU*T -0.	1.0	2.0	4.0	7.0	10.0	15.0	20.0
0.10	1.00	1.00	1.00	1.00	1.00	1.00	1.00	1.00
0.15	1.00	1.00	1.00	1.00	1.00	1.00	1.00	1.00
0.20	1.00	1.00	1.00	1.00	1.00	1.00	1.00	1.00
0.25	1.00	2.22	3.03	5.77	11.44	19.38	37.08	60.23
0.50	1.00	1.98	3.09	5.98	11.70	19.20	35.40	55.60
1.00	1.00	1.87	2.89	5.39	10.20	16.20	28.30	42.70
2.00	1.00	1.76	2.43	4.13	7.25	10.90	17.60	25.10
3.00	1.00	1.55	2.15	3.51	5.85	8.51	13.50	19.10
4.00	1.00	1.45	1.94	3.03	4.91	7.11	11.20	16.00
6.00	1.00	1.34	1.72	2.58	4.14	6.02	9.89	14.70
8.00	1.00	1.27	1.56	2.23	3.49	5.07	8.50	13.00
10.00	1.00	1.20	1.42	1.95	2.99	4.35	7.54	12.40

MATERIAL 4

ENERGY MEV	MU*T -0.	1.0	2.0	4.0	7.0	10.0	15.0	20.0
0.10	1.00	1.00	1.00	1.00	1.00	1.00	1.00	1.00
0.15	1.00	1.00	1.00	1.00	1.00	1.00	1.00	1.00
0.20	1.00	1.00	1.00	1.00	1.00	1.00	1.00	1.00
0.25	1.00	1.17	1.28	1.40	1.53	1.67	1.82	1.98
0.50	1.00	1.24	1.42	1.69	2.00	2.27	2.65	2.73
1.00	1.00	1.37	1.69	2.26	3.02	3.74	4.81	5.86
2.00	1.00	1.39	1.76	2.51	3.66	4.84	6.87	9.00
3.00	1.00	1.34	1.68	2.43	3.75	5.30	8.44	12.30
4.00	1.00	1.27	1.56	2.25	3.61	5.44	9.80	16.30
6.00	1.00	1.18	1.40	1.97	3.34	5.69	13.80	32.70
8.00	1.00	1.14	1.30	1.74	2.89	5.07	14.10	44.60
10.00	1.00	1.11	1.23	1.58	2.52	4.34	12.50	39.20

SDC DATA LIBRARY

TABLE 4 CONTINUED

DOSE BUILDUP FACTORS - POINT ISOTROPIC SOURCE
VS
ENERGY AND MU*T

MATERIAL 5

ENERGY MEV	MU*T -0.	1.0	2.0	4.0	7.0	10.0	15.0	20.0
0.10	1.00	1.00	1.00	1.00	1.00	1.00	1.00	1.00
0.15	1.00	1.00	1.00	1.00	1.00	1.00	1.00	1.00
0.20	1.00	1.00	1.00	1.00	1.00	1.00	1.00	1.00
0.25	1.00	1.05	1.08	1.16	1.25	1.33	1.43	1.50
0.50	1.00	1.17	1.30	1.48	1.67	1.85	2.08	2.20
1.00	1.00	1.31	1.56	1.98	2.50	2.97	3.67	4.20
2.00	1.00	1.33	1.64	2.23	3.09	3.95	5.36	6.48
3.00	1.00	1.29	1.58	2.21	3.27	4.51	6.97	9.88
4.00	1.00	1.24	1.50	2.09	3.21	4.66	8.01	12.70
6.00	1.00	1.16	1.36	1.85	2.96	4.80	10.80	23.00
8.00	1.00	1.12	1.27	1.66	2.61	4.36	11.20	28.00
10.00	1.00	1.09	1.20	1.51	2.26	3.78	10.50	28.50

MATERIAL 6

ENERGY MEV	MU*T -0.	1.0	2.0	4.0	7.0	10.0	15.0	20.0
0.10	1.00	1.00	1.00	1.00	1.00	1.00	1.00	1.00
0.15	1.00	1.00	1.00	1.00	1.00	1.00	1.00	1.00
0.20	1.00	1.00	1.00	1.00	1.00	1.00	1.00	1.00
0.25	1.00	3.02	5.52	18.20	45.18	97.42	220.18	409.00
0.50	1.00	2.60	5.05	13.20	30.00	60.00	124.60	217.48
1.00	1.00	2.05	3.59	7.73	15.25	24.15	43.20	70.00
2.00	1.00	1.80	2.75	4.82	8.35	12.33	19.45	26.95
3.00	1.00	1.73	2.32	3.78	6.24	8.65	12.80	17.00
4.00	1.00	1.63	2.22	3.29	4.98	6.81	9.95	13.00
6.00	1.00	1.52	1.88	2.72	4.01	5.23	7.25	9.15
8.00	1.00	1.42	1.75	2.38	3.32	4.28	5.80	9.32
10.00	1.00	1.36	1.65	2.20	3.01	3.82	5.12	6.32

SDC DATA LIBRARY

TABLE 4 CONTINUED

DOSE BUILDUP FACTORS - POINT ISOTROPIC SOURCE
VS
ENERGY AND MU*T

MATERIAL 7

ENERGY MEV	MU*T -0.	1.0	2.0	4.0	7.0	10.0	15.0	20.0
0.10	1.00	1.00	1.00	1.00	1.00	1.00	1.00	1.00
0.15	1.00	1.00	1.00	1.00	1.00	1.00	1.00	1.00
0.20	1.00	1.00	1.00	1.00	1.00	1.00	1.00	1.00
0.25	1.00	2.35	4.01	8.41	17.92	31.66	57.24	95.93
0.50	1.00	2.03	3.22	6.10	11.90	19.50	34.80	51.00
1.00	1.00	1.85	2.85	5.33	10.10	16.50	29.60	42.00
2.00	1.00	1.72	2.51	4.28	7.40	11.00	17.40	25.00
3.00	1.00	1.60	2.22	3.46	5.79	8.45	13.15	17.90
4.00	1.00	1.45	2.00	3.20	5.05	7.18	11.10	15.75
6.00	1.00	1.34	1.75	2.68	4.33	6.20	10.00	15.00
8.00	1.00	1.30	1.63	2.30	3.55	5.10	8.70	14.12
10.00	1.00	1.22	1.45	1.95	3.00	4.40	7.70	13.00

MATERIAL 8

ENERGY MEV	MU*T -0.	1.0	2.0	4.0	7.0	10.0	15.0	20.0
0.10	1.00	1.00	1.00	1.00	1.00	1.00	1.00	1.00
0.15	1.00	1.00	1.00	1.00	1.00	1.00	1.00	1.00
0.20	1.00	1.00	1.00	1.00	1.00	1.00	1.00	1.00
0.25	1.00	2.61	4.67	11.85	28.61	53.58	114.86	188.11
0.50	1.00	2.35	3.75	8.60	19.00	33.00	65.00	100.00
1.00	1.00	2.02	3.31	6.60	13.20	20.50	35.00	52.30
2.00	1.00	1.80	2.69	4.65	8.09	11.75	18.45	25.90
3.00	1.00	1.64	2.10	3.72	6.10	8.55	13.00	17.90
4.00	1.00	1.54	2.05	3.18	5.01	6.92	10.25	14.00
6.00	1.00	1.45	1.88	2.72	4.13	5.60	8.15	10.80
8.00	1.00	1.38	1.66	2.31	3.42	4.58	7.56	8.92
10.00	1.00	1.28	1.56	2.11	3.02	4.04	6.83	8.32

SDC DATA LIBRARY

TABLE 4 CONTINUED

DOSE BUILDUP FACTORS - POINT ISOTROPIC SOURCE
VS
ENERGY AND MU*T

MATERIAL 9

ENERGY MEV	MU*T -0.	1.0	2.0	4.0	7.0	10.0	15.0	20.0
0.10	1.00	1.00	1.00	1.00	1.00	1.00	1.00	1.00
0.15	1.00	1.00	1.00	1.00	1.00	1.00	1.00	1.00
0.20	1.00	1.00	1.00	1.00	1.00	1.00	1.00	1.00
0.25	1.00	2.35	4.36	10.61	23.80	42.22	189.77	152.37
0.50	1.00	2.02	3.50	7.70	15.80	26.00	50.80	81.00
1.00	1.00	1.96	3.05	6.22	14.10	18.70	31.80	48.00
2.00	1.00	1.75	2.62	4.52	7.75	11.30	18.00	26.00
3.00	1.00	1.65	2.30	3.72	6.00	8.65	13.20	18.00
4.00	1.00	1.53	2.03	3.20	5.07	7.05	10.80	15.30
6.00	1.00	1.45	1.85	2.70	4.14	5.73	8.90	13.00
8.00	1.00	1.35	1.66	2.33	3.48	4.78	7.42	10.92
10.00	1.00	1.27	1.53	2.10	3.05	4.21	6.63	10.00

MATERIAL 10

ENERGY MEV	MU*T -0.	1.0	2.0	4.0	7.0	10.0	15.0	20.0
0.10	1.00	1.00	1.00	1.00	1.00	1.00	1.00	1.00
0.15	1.00	1.00	1.00	1.00	1.00	1.00	1.00	1.00
0.20	1.00	1.00	1.00	1.00	1.00	1.00	1.00	1.00
0.25	1.00	2.40	5.00	12.50	32.00	62.00	140.00	220.00
0.50	1.00	2.20	4.30	10.60	26.00	49.50	108.40	196.00
1.00	1.00	1.98	3.30	6.60	13.00	21.10	38.30	54.80
2.00	1.00	1.80	2.60	4.60	8.00	11.80	18.60	25.70
3.00	1.00	1.65	2.30	3.80	6.10	8.60	13.00	17.80
4.00	1.00	1.55	2.10	3.30	5.10	7.00	10.40	14.00
6.00	1.00	1.45	1.90	2.80	4.10	5.60	8.20	11.00
8.00	1.00	1.35	1.70	2.40	3.50	4.70	6.90	9.40
10.00	1.00	1.30	1.60	2.20	3.10	4.00	5.90	8.70

SDC DATA LIBRARY

TABLE 4 CONTINUED

DOSE BUILDUP FACTORS - POINT ISOTROPIC SOURCE
VS
ENERGY AND MU*T

MATERIAL 11

ENERGY MEV	MU*T -0.	1.0	2.0	4.0	7.0	10.0	15.0	20.0
0.10	1.00	1.00	1.00	1.00	1.00	1.00	1.00	1.00
0.15	1.00	1.00	1.00	1.00	1.00	1.00	1.00	1.00
0.20	1.00	1.00	1.00	1.00	1.00	1.00	1.00	1.00
0.25	1.00	2.10	4.00	10.00	25.00	48.00	110.00	180.00
0.50	1.00	2.02	3.60	8.30	20.30	38.60	84.60	141.20
1.00	1.00	1.95	2.80	5.30	10.20	16.00	29.00	44.80
2.00	1.00	1.65	2.40	4.00	6.70	9.80	15.20	21.10
3.00	1.00	1.53	2.20	3.40	5.40	7.60	11.60	16.50
4.00	1.00	1.50	2.00	3.00	4.60	6.50	10.20	15.20
6.00	1.00	1.35	1.70	2.50	3.90	5.60	9.80	15.00
8.00	1.00	1.30	1.60	2.20	3.30	4.80	8.90	14.20
10.00	1.00	1.25	1.50	2.00	2.90	4.10	7.80	13.50

MATERIAL 12

ENERGY MEV	MU*T -0.	1.0	2.0	4.0	7.0	10.0	15.0	20.0
0.10	1.00	1.00	1.00	1.00	1.00	1.00	1.00	1.00
0.15	1.00	1.00	1.00	1.00	1.00	1.00	1.00	1.00
0.20	1.00	1.00	1.00	1.00	1.00	1.00	1.00	1.00
0.25	1.00	1.70	2.30	4.80	10.00	22.00	60.00	95.00
0.50	1.00	1.60	2.20	4.10	8.60	15.30	40.00	67.10
1.00	1.00	1.55	2.10	3.40	5.70	8.40	12.30	16.10
2.00	1.00	1.49	2.00	3.10	4.80	6.70	9.90	13.80
3.00	1.00	1.44	1.90	2.80	4.40	6.10	9.60	13.50
4.00	1.00	1.35	1.70	2.50	4.00	5.80	9.90	13.90
6.00	1.00	1.25	1.50	2.20	3.50	5.60	12.30	22.40
8.00	1.00	1.18	1.40	1.90	3.10	5.00	12.20	28.70
10.00	1.00	1.15	1.30	1.70	2.70	4.20	10.80	31.40

SDC DATA LIBRARY

TABLE 4 CONTINUED

DOSE BUILDUP FACTORS - POINT ISCTROPIC SOURCE
VS
ENERGY AND MU*T

MATERIAL 13

ENERGY MEV	MU*T -0.	1.0	2.0	4.0	7.0	10.0	15.0	20.0
0.10	1.00	1.00	1.00	1.00	1.00	1.00	1.00	1.00
0.15	1.00	1.00	1.00	1.00	1.00	1.00	1.00	1.00
0.20	1.00	1.00	1.00	1.00	1.00	1.00	1.00	1.00
0.25	1.00	2.75	5.28	13.05	32.38	63.16	142.78	265.23
0.50	1.00	2.37	4.24	9.47	21.50	38.90	80.80	141.00
1.00	1.00	2.02	3.31	6.57	13.10	21.20	37.90	58.50
2.00	1.00	1.75	2.61	4.62	8.05	11.90	18.70	26.30
3.00	1.00	1.64	2.32	3.78	6.14	8.65	13.00	17.70
4.00	1.00	1.53	2.08	3.22	5.01	6.88	10.10	13.40
6.00	1.00	1.42	1.85	2.70	4.06	5.49	7.97	10.40
8.00	1.00	1.34	1.68	2.37	3.45	4.58	6.56	8.52
10.00	1.00	1.28	1.55	2.12	3.01	3.96	5.63	7.32

MATERIAL 14

ENERGY MEV	MU*T -0.	1.0	2.0	4.0	7.0	10.0	15.0	20.0
0.10	1.00	1.00	1.00	1.00	1.00	1.00	1.00	1.00
0.15	1.00	1.00	1.00	1.00	1.00	1.00	1.00	1.00
0.20	1.00	1.00	1.00	1.00	1.00	1.00	1.00	1.00
0.25	1.00	3.09	7.14	23.00	72.90	166.00	456.00	982.00
0.50	1.00	2.52	5.14	14.30	38.80	77.60	178.00	334.00
1.00	1.00	2.13	3.71	7.68	16.20	27.10	50.40	82.20
2.00	1.00	1.83	2.77	4.88	8.46	12.40	19.50	27.70
3.00	1.00	1.69	2.42	3.91	6.23	8.63	12.80	17.00
4.00	1.00	1.58	2.17	3.34	5.13	6.94	9.97	12.90
6.00	1.00	1.46	1.91	2.76	3.99	5.18	7.09	8.85
8.00	1.00	1.38	1.74	2.40	3.34	4.25	5.66	6.95
10.00	1.00	1.33	1.63	2.19	2.97	3.72	4.90	5.98

SDC DATA LIBRARY

TABLE 5

DOSE BUILDUP FACTORS - PLANE COLLIMATED SOURCE
VS
ENERGY AND MU*T

MATERIAL 1

ENERGY MEV	MU*T -0.	1.0	2.0	4.0	7.0	10.0	15.0	20.0
0.10	1.00	1.00	1.00	1.00	1.00	1.00	1.00	1.00
0.15	1.00	1.00	1.00	1.00	1.00	1.00	1.00	1.00
0.20	1.00	1.00	1.00	1.00	1.00	1.00	1.00	1.00
0.25	1.00	3.09	7.14	23.00	72.90	166.00	456.00	982.00
0.50	1.00	2.63	4.29	9.05	20.00	35.90	74.90	155.00
1.00	1.00	2.26	3.39	6.27	11.50	18.00	30.80	82.20
2.00	1.00	1.84	2.63	4.28	6.96	9.87	14.40	27.70
3.00	1.00	1.69	2.31	3.57	5.51	7.48	10.80	17.00
4.00	1.00	1.58	2.10	3.12	4.63	6.19	8.54	12.90
6.00	1.00	1.45	1.86	2.63	3.76	4.86	6.78	8.85
8.00	1.00	1.36	1.69	2.30	3.16	4.00	5.47	6.95
10.00	1.00	1.33	1.63	2.19	2.97	3.72	4.90	5.98

MATERIAL 2

ENERGY MEV	MU*T -0.	1.0	2.0	4.0	7.0	10.0	15.0	20.0
0.10	1.00	1.00	1.00	1.00	1.00	1.00	1.00	1.00
0.15	1.00	1.00	1.00	1.00	1.00	1.00	1.00	1.00
0.20	1.00	1.00	1.00	1.00	1.00	1.00	1.00	1.00
0.25	1.00	2.88	4.66	9.21	19.14	33.69	69.00	131.28
0.50	1.00	2.48	3.74	6.68	12.71	20.75	39.05	69.79
1.00	1.00	2.11	3.07	5.45	9.61	14.54	24.06	33.80
2.00	1.00	1.73	2.50	4.12	6.69	9.52	14.12	18.79
3.00	1.00	1.65	2.25	3.50	5.47	7.51	10.97	14.45
4.00	1.00	1.54	2.02	3.06	4.60	6.19	8.78	11.02
6.00	1.00	1.42	1.82	2.58	3.79	5.03	7.24	9.19
8.00	1.00	1.33	1.65	2.29	3.25	4.24	6.04	7.87
10.00	1.00	1.29	1.56	2.12	2.97	3.85	5.35	6.24

SDC DATA LIBRARY

TABLE 5 CONTINUED

DOSE BUILDUP FACTORS - PLANE COLLIMATED SOURCE
VS
ENERGY AND MU*T

MATERIAL 3

ENERGY MEV	MU*T -0.	1.0	2.0	4.0	7.0	10.0	15.0	20.0
0.10	1.00	1.00	1.00	1.00	1.00	1.00	1.00	1.00
0.15	1.00	1.00	1.00	1.00	1.00	1.00	1.00	1.00
0.20	1.00	1.00	1.00	1.00	1.00	1.00	1.00	1.00
0.25	1.00	2.22	3.03	5.77	11.44	19.38	37.08	60.23
0.50	1.00	2.07	2.94	4.87	8.31	12.40	20.60	30.00
1.00	1.00	1.92	2.74	4.57	7.81	11.60	18.90	27.00
2.00	1.00	1.69	2.35	3.76	6.11	8.78	13.70	18.80
3.00	1.00	1.58	2.13	3.32	5.26	7.41	11.40	15.40
4.00	1.00	1.48	1.90	2.95	4.61	6.46	9.92	13.50
6.00	1.00	1.35	1.71	2.48	3.81	5.35	8.39	11.90
8.00	1.00	1.27	1.55	2.17	3.27	4.58	7.33	10.60
10.00	1.00	1.22	1.44	1.95	2.89	4.07	6.70	9.68

MATERIAL 4

ENERGY MEV	MU*T -0.	1.0	2.0	4.0	7.0	10.0	15.0	20.0
0.10	1.00	1.00	1.00	1.00	1.00	1.00	1.00	1.00
0.15	1.00	1.00	1.00	1.00	1.00	1.00	1.00	1.00
0.20	1.00	1.00	1.00	1.00	1.00	1.00	1.00	1.00
0.25	1.00	1.17	1.28	1.40	1.53	1.67	1.82	1.98
0.50	1.00	1.24	1.39	1.63	1.87	2.08	2.65	2.59
1.00	1.00	1.38	1.68	2.18	2.80	3.40	4.20	5.15
2.00	1.00	1.40	1.76	2.41	3.36	4.35	5.94	7.07
3.00	1.00	1.36	1.71	2.42	3.55	4.82	7.18	9.52
4.00	1.00	1.28	1.56	2.18	3.29	4.69	7.70	11.00
6.00	1.00	1.19	1.40	1.87	2.97	4.69	9.53	18.00
8.00	1.00	1.14	1.30	1.69	2.61	4.18	9.08	18.80
10.00	1.00	1.11	1.24	1.54	2.27	3.54	7.70	16.40

SDC DATA LIBRARY

TABLE 5 CONTINUED

DOSE BUILDUP FACTORS - PLANE COLLIMATED SOURCE
VS
ENERGY AND MU*T

MATERIAL 5

ENERGY MEV	MU*T -0.	1.0	2.0	4.0	7.0	10.0	15.0	20.0
0.10	1.00	1.00	1.00	1.00	1.00	1.00	1.00	1.00
0.15	1.00	1.00	1.00	1.00	1.00	1.00	1.00	1.00
0.20	1.00	1.00	1.00	1.00	1.00	1.00	1.00	1.00
0.25	1.00	1.05	1.08	1.16	1.25	1.33	1.43	1.50
0.50	1.00	1.17	1.28	1.45	1.60	1.73	1.93	2.04
1.00	1.00	1.30	1.53	1.90	2.32	2.70	3.60	4.12
2.00	1.00	1.33	1.62	2.15	2.87	3.56	4.89	5.95
3.00	1.00	1.29	1.57	2.13	3.02	3.99	5.94	8.42
4.00	1.00	1.25	1.49	2.02	2.94	4.06	6.47	10.25
6.00	1.00	1.18	1.37	1.82	2.74	4.12	7.79	16.59
8.00	1.00	1.13	1.27	1.61	2.39	3.65	7.36	18.40
10.00	1.00	1.10	1.21	1.48	2.12	3.21	6.58	17.86

MATERIAL 6

ENERGY MEV	MU*T -0.	1.0	2.0	4.0	7.0	10.0	15.0	20.0
0.10	1.00	1.00	1.00	1.00	1.00	1.00	1.00	1.00
0.15	1.00	1.00	1.00	1.00	1.00	1.00	1.00	1.00
0.20	1.00	1.00	1.00	1.00	1.00	1.00	1.00	1.00
0.25	1.00	3.16	5.49	12.54	25.96	50.46	103.40	199.80
0.50	1.00	2.72	4.41	9.10	17.24	31.08	58.52	106.22
1.00	1.00	2.15	3.32	6.39	11.11	16.45	27.21	39.89
2.00	1.00	1.78	2.63	4.28	6.93	9.85	14.62	19.11
3.00	1.00	1.74	2.24	3.49	5.55	7.51	10.80	13.90
4.00	1.00	1.64	2.16	3.12	4.56	6.11	8.62	10.64
6.00	1.00	1.52	1.84	2.60	3.75	4.82	6.66	8.20
8.00	1.00	1.41	1.71	2.29	3.13	3.97	5.39	6.90
10.00	1.00	1.37	1.66	2.20	2.98	3.73	4.92	5.47

SDC DATA LIBRARY

TABLE 5 CONTINUED

DOSE BUILDUP FACTORS - PLANE COLLIMATED SOURCE
VS
ENERGY AND MU*T

MATERIAL 7

ENERGY MEV	MU*T -0.	1.0	2.0	4.0	7.0	10.0	15.0	20.0
0.10	1.00	1.00	1.00	1.00	1.00	1.00	1.00	1.00
0.15	1.00	1.00	1.00	1.00	1.00	1.00	1.00	1.00
0.20	1.00	1.00	1.00	1.00	1.00	1.00	1.00	1.00
0.25	1.00	2.46	4.17	6.78	12.58	20.20	35.36	51.47
0.50	1.00	2.12	3.05	4.92	8.35	12.44	20.01	27.36
1.00	1.00	1.90	2.70	4.51	7.71	11.78	19.70	26.40
2.00	1.00	1.65	2.43	3.89	6.23	8.86	13.52	18.67
3.00	1.00	1.63	2.20	3.27	5.20	7.36	11.10	14.44
4.00	1.00	1.48	1.96	3.11	4.73	6.52	9.82	13.27
6.00	1.00	1.35	1.74	2.58	3.99	5.52	8.52	12.12
8.00	1.00	1.30	1.62	2.24	3.33	4.61	7.53	11.61
10.00	1.00	1.24	1.47	1.95	2.90	4.13	6.87	10.21

MATERIAL 8

ENERGY MEV	MU*T -0.	1.0	2.0	4.0	7.0	10.0	15.0	20.0
0.10	1.00	1.00	1.00	1.00	1.00	1.00	1.00	1.00
0.15	1.00	1.00	1.00	1.00	1.00	1.00	1.00	1.00
0.20	1.00	1.00	1.00	1.00	1.00	1.00	1.00	1.00
0.25	1.00	2.73	4.22	8.74	17.89	30.31	58.77	95.61
0.50	1.00	2.35	3.39	6.34	11.88	18.67	33.26	50.83
1.00	1.00	2.10	3.09	5.51	9.81	14.25	22.57	31.07
2.00	1.00	1.76	2.58	4.17	6.75	9.42	14.06	18.77
3.00	1.00	1.66	2.05	3.47	5.45	7.43	10.97	14.55
4.00	1.00	1.56	2.00	3.05	4.63	6.24	8.96	11.60
6.00	1.00	1.45	1.85	2.61	3.84	5.08	7.25	9.26
8.00	1.00	1.37	1.63	2.23	3.22	4.21	6.82	7.93
10.00	1.00	1.29	1.56	2.11	2.96	3.88	6.36	6.91

SDC DATA LIBRARY

TABLE 5 CONTINUED

DOSE BUILDUP FACTORS - PLANE COLLIMATED SOURCE
VS
ENERGY AND MU*T

MATERIAL 9

ENERGY MEV	MU*T -0.	1.0	2.0	4.0	7.0	10.0	15.0	20.0
0.10	1.00	1.00	1.00	1.00	1.00	1.00	1.00	1.00
0.15	1.00	1.00	1.00	1.00	1.00	1.00	1.00	1.00
0.20	1.00	1.00	1.00	1.00	1.00	1.00	1.00	1.00
0.25	1.00	2.45	4.03	8.17	15.75	25.33	48.63	79.53
0.50	1.00	2.11	3.24	5.93	10.46	15.60	27.52	42.28
1.00	1.00	2.02	2.87	5.23	9.11	13.17	20.83	29.32
2.00	1.00	1.70	2.52	4.08	6.50	9.08	13.85	19.12
3.00	1.00	1.67	2.26	3.49	5.38	7.52	11.14	14.58
4.00	1.00	1.55	1.98	3.09	4.72	6.38	9.50	12.78
6.00	1.00	1.46	1.83	2.59	3.83	5.15	7.75	10.83
8.00	1.00	1.35	1.64	2.26	3.27	4.36	6.56	9.34
10.00	1.00	1.29	1.55	2.10	2.97	4.00	6.05	8.08

MATERIAL 10

ENERGY MEV	MU*T -0.	1.0	2.0	4.0	7.0	10.0	15.0	20.0
0.10	1.00	1.00	1.00	1.00	1.00	1.00	1.00	1.00
0.15	1.00	1.00	1.00	1.00	1.00	1.00	1.00	1.00
0.20	1.00	1.00	1.00	1.00	1.00	1.00	1.00	1.00
0.25	1.00	2.40	5.00	12.50	32.00	62.00	140.00	220.00
0.50	1.00	2.20	4.30	10.60	26.00	49.50	108.40	196.00
1.00	1.00	1.98	3.30	6.60	13.00	21.10	38.30	54.80
2.00	1.00	1.80	2.60	4.60	8.00	11.80	18.60	25.70
3.00	1.00	1.65	2.30	3.80	6.10	8.60	13.00	17.80
4.00	1.00	1.55	2.10	3.30	5.10	7.00	10.40	14.00
6.00	1.00	1.45	1.90	2.80	4.10	5.60	8.20	11.00
8.00	1.00	1.35	1.70	2.40	3.50	4.70	6.90	9.40
10.00	1.00	1.30	1.60	2.20	3.10	4.00	5.90	8.70

SDC DATA LIBRARY

TABLE 5 CONTINUED

DOSE BUILDUP FACTORS - PLANE COLLIMATED SOURCE
VS
ENERGY AND MU*T

MATERIAL 11

ENERGY MEV	MU*T -0.	1.0	2.0	4.0	7.0	10.0	15.0	20.0
0.10	1.00	1.00	1.00	1.00	1.00	1.00	1.00	1.00
0.15	1.00	1.00	1.00	1.00	1.00	1.00	1.00	1.00
0.20	1.00	1.00	1.00	1.00	1.00	1.00	1.00	1.00
0.25	1.00	2.10	4.00	10.00	25.00	48.00	110.00	180.00
0.50	1.00	2.02	3.60	8.30	20.30	38.60	84.60	141.20
1.00	1.00	1.95	2.80	5.30	10.20	16.00	29.00	44.80
2.00	1.00	1.65	2.40	4.00	6.70	9.80	15.20	21.10
3.00	1.00	1.53	2.20	3.40	5.40	7.60	11.60	16.50
4.00	1.00	1.50	2.00	3.00	4.60	6.50	10.20	15.20
6.00	1.00	1.35	1.70	2.50	3.90	5.60	9.80	15.00
8.00	1.00	1.30	1.60	2.20	3.30	4.80	8.90	14.20
10.00	1.00	1.25	1.50	2.00	2.90	4.10	7.80	13.50

MATERIAL 12

ENERGY MEV	MU*T -0.	1.0	2.0	4.0	7.0	10.0	15.0	20.0
0.10	1.00	1.00	1.00	1.00	1.00	1.00	1.00	1.00
0.15	1.00	1.00	1.00	1.00	1.00	1.00	1.00	1.00
0.20	1.00	1.00	1.00	1.00	1.00	1.00	1.00	1.00
0.25	1.00	1.70	2.30	4.80	10.00	22.00	60.00	95.00
0.50	1.00	1.60	2.20	4.10	8.60	15.30	40.00	67.10
1.00	1.00	1.55	2.10	3.40	5.70	8.40	12.30	16.10
2.00	1.00	1.49	2.00	3.10	4.80	6.70	9.90	13.80
3.00	1.00	1.44	1.90	2.80	4.40	6.10	9.60	13.50
4.00	1.00	1.35	1.70	2.50	4.00	5.80	9.90	13.90
6.00	1.00	1.25	1.50	2.20	3.50	5.60	12.30	22.40
8.00	1.00	1.18	1.40	1.90	3.10	5.00	12.20	28.70
10.00	1.00	1.15	1.30	1.70	2.70	4.20	10.80	31.40

SDC DATA LIBRARY

TABLE 5 CONTINUED

DOSE BUILDUP FACTORS - PLANE COLLIMATED SOURCE
VS
ENERGY AND MU*T

MATERIAL 13

ENERGY MEV	MU*T -0.	1.0	2.0	4.0	7.0	10.0	15.0	20.0
0.10	1.00	1.00	1.00	1.00	1.00	1.00	1.00	1.00
0.15	1.00	1.00	1.00	1.00	1.00	1.00	1.00	1.00
0.20	1.00	1.00	1.00	1.00	1.00	1.00	1.00	1.00
0.25	1.00	2.75	5.28	13.05	32.38	63.16	142.78	265.23
0.50	1.00	2.37	4.24	9.47	21.50	38.90	80.80	141.00
1.00	1.00	2.02	3.31	6.57	13.10	21.20	37.90	58.50
2.00	1.00	1.75	2.61	4.62	8.05	11.90	18.70	26.30
3.00	1.00	1.64	2.32	3.78	6.14	8.65	13.00	17.70
4.00	1.00	1.53	2.08	3.22	5.01	6.88	10.10	13.40
6.00	1.00	1.42	1.85	2.70	4.06	5.49	7.97	10.40
8.00	1.00	1.34	1.68	2.37	3.45	4.58	6.56	8.52
10.00	1.00	1.28	1.55	2.12	3.01	3.96	5.63	7.32

MATERIAL 14

ENERGY MEV	MU*T -0.	1.0	2.0	4.0	7.0	10.0	15.0	20.0
0.10	1.00	1.00	1.00	1.00	1.00	1.00	1.00	1.00
0.15	1.00	1.00	1.00	1.00	1.00	1.00	1.00	1.00
0.20	1.00	1.00	1.00	1.00	1.00	1.00	1.00	1.00
0.25	1.00	3.09	7.14	23.00	72.90	166.00	456.00	982.00
0.50	1.00	2.63	4.29	9.05	20.00	35.90	74.90	334.00
1.00	1.00	2.26	3.39	6.27	11.50	18.00	30.80	82.20
2.00	1.00	1.84	2.63	4.28	6.96	9.87	14.40	27.70
3.00	1.00	1.69	2.31	3.57	5.51	7.48	10.80	17.00
4.00	1.00	1.58	2.10	3.12	4.63	6.19	8.54	12.90
6.00	1.00	1.45	1.86	2.63	3.76	4.86	6.78	8.85
8.00	1.00	1.36	1.69	2.30	3.16	4.00	5.47	6.95
10.00	1.00	1.33	1.63	2.19	2.97	3.72	4.90	5.98

SDC DATA LIBRARY

TABLE 6

TC/RO VS MC(A+Z) AND R/RO

MC	R/RO							
(A+Z)	0.	0.1	0.2	0.3	0.4	0.6	0.8	1.0
1.0	0.517	0.568	0.609	0.637	0.659	0.673	0.687	0.723
2.0	0.459	0.500	0.546	0.573	0.609	0.650	0.637	0.673
3.0	0.409	0.446	0.491	0.523	0.555	0.587	0.596	0.628
4.0	0.359	0.400	0.441	0.468	0.509	0.537	0.550	0.587
5.0	0.323	0.359	0.396	0.428	0.455	0.487	0.505	0.541
6.0	0.287	0.328	0.364	0.387	0.414	0.446	0.468	0.505
7.0	0.264	0.296	0.332	0.355	0.378	0.409	0.437	0.478
8.0	0.246	0.278	0.304	0.328	0.350	0.387	0.405	0.446
9.0	0.232	0.259	0.287	0.309	0.332	0.364	0.382	0.423
10.0	0.218	0.246	0.268	0.291	0.314	0.346	0.364	0.405
11.0	0.209	0.233	0.259	0.278	0.305	0.337	0.355	0.396
12.0	0.200	0.223	0.250	0.273	0.296	0.328	0.346	0.387
13.0	0.196	0.218	0.241	0.264	0.287	0.323	0.341	0.382
14.0	0.191	0.209	0.237	0.259	0.282	0.318	0.337	0.378
15.0	0.182	0.205	0.232	0.255	0.278	0.314	0.332	0.378
16.0	0.178	0.200	0.228	0.250	0.273	0.309	0.328	0.373
17.0	0.173	0.200	0.223	0.250	0.273	0.305	0.323	0.373
18.0	0.168	0.196	0.218	0.246	0.268	0.305	0.323	0.373

TABLE 7

MCTC/M VS R/RO AND MU*T

R/RO	MU*T -0.	1.	2.	3.	4.	5.	6.	8.	10.	12.	14.	16.	18.	20.	22.	24.
0.	2.35	2.77	2.93	3.06	3.15	3.21	3.26	3.32	3.37	3.45	3.55	3.65	3.75	3.85	3.95	4.06
0.25	2.00	2.40	2.58	2.66	2.75	2.80	2.80	2.87	2.90	2.97	3.10	3.25	3.34	3.43	3.54	3.62
0.50	1.76	2.10	2.22	2.30	2.35	2.40	2.42	2.44	2.48	2.53	2.68	2.85	2.94	3.02	3.10	3.17
0.75	1.61	1.82	1.94	2.00	2.02	2.06	2.08	2.10	2.16	2.20	2.28	2.45	2.54	2.60	2.66	2.70
1.00	1.50	1.65	1.74	1.80	1.78	1.80	1.82	1.86	1.90	1.96	2.03	2.08	2.12	2.17	2.24	2.28
1.25	1.40	1.52	1.60	1.64	1.63	1.62	1.62	1.64	1.70	1.79	1.84	1.87	1.90	1.96	2.01	2.07
1.50	1.32	1.41	1.50	1.52	1.50	1.48	1.46	1.46	1.55	1.66	1.73	1.76	1.80	1.84	1.88	1.94
1.75	1.26	1.33	1.41	1.43	1.41	1.37	1.34	1.33	1.43	1.56	1.64	1.67	1.73	1.75	1.80	1.84
2.00	1.20	1.26	1.33	1.36	1.34	1.28	1.24	1.24	1.34	1.48	1.58	1.60	1.65	1.68	1.71	1.76
2.25	1.14	1.20	1.27	1.29	1.27	1.22	1.18	1.17	1.27	1.41	1.52	1.54	1.59	1.61	1.65	1.70
2.50	1.10	1.16	1.21	1.23	1.20	1.16	1.13	1.12	1.21	1.35	1.46	1.49	1.52	1.55	1.60	1.64
2.75	1.06	1.12	1.16	1.18	1.17	1.12	1.10	1.08	1.17	1.31	1.40	1.44	1.46	1.50	1.54	1.59
3.00	1.04	1.08	1.12	1.14	1.13	1.09	1.07	1.05	1.13	1.26	1.35	1.40	1.41	1.45	1.50	1.54
3.50	0.98	1.02	1.06	1.07	1.06	1.02	1.01	0.98	1.06	1.18	1.26	1.29	1.32	1.36	1.40	1.44
4.00	0.94	0.96	1.00	1.02	1.00	0.98	0.96	0.93	0.99	1.10	1.18	1.20	1.23	1.28	1.31	1.36
4.50	0.89	0.91	0.95	0.98	0.96	0.95	0.93	0.88	0.93	1.02	1.10	1.12	1.15	1.19	1.23	1.28
5.00	0.84	0.86	0.92	0.95	0.94	0.93	0.90	0.83	0.87	0.96	1.03	1.05	1.07	1.10	1.16	1.20
5.50	0.80	0.81	0.86	0.88	0.87	0.86	0.84	0.78	0.81	0.89	0.96	0.97	0.99	1.03	1.08	1.12
6.00	0.76	0.76	0.80	0.62	0.82	0.81	0.78	0.74	0.76	0.82	0.89	0.90	0.92	0.96	1.01	1.04
6.50	0.73	0.72	0.75	0.78	0.76	0.76	0.73	0.69	0.70	0.76	0.82	0.83	0.84	0.89	0.94	0.98
7.00	0.70	0.67	0.70	0.73	0.72	0.71	0.68	0.64	0.65	0.70	0.75	0.76	0.78	0.82	0.86	0.90
7.50	0.66	0.62	0.66	0.69	0.68	0.67	0.63	0.60	0.60	0.64	0.68	0.69	0.70	0.74	0.79	0.82
8.00	0.63	0.58	0.62	0.65	0.64	0.63	0.58	0.55	0.54	0.58	0.61	0.62	0.63	0.67	0.71	0.75
8.50	0.60	0.54	0.58	0.61	0.60	0.59	0.54	0.50	0.50	0.52	0.54	0.55	0.56	0.60	0.64	0.68
9.00	0.57	0.50	0.55	0.58	0.57	0.55	0.50	0.45	0.45	0.47	0.48	0.48	0.50	0.52	0.57	0.61

SDC DATA LIBRARY

TABLE 8

M VS R/RO AND MC(A+Z)

R/RO	MC(A+Z) 1.	2.	3.	4.	5.	6.	7.	8.	9.	9.	10.	12.	14.	16.	18.	20.
0.	0.31	0.52	0.71	0.86	0.97	1.05	1.12	1.20	1.23	1.26	1.30	1.38	1.44	1.51	1.56	1.62
0.25	0.30	0.51	0.70	0.86	0.97	1.05	1.13	1.20	1.23	1.26	1.31	1.38	1.45	1.52	1.58	1.63
0.50	0.29	0.49	0.68	0.85	0.96	1.06	1.13	1.20	1.23	1.27	1.31	1.40	1.47	1.55	1.60	1.66
0.75	0.27	0.48	0.66	0.83	0.95	1.06	1.13	1.20	1.24	1.27	1.33	1.41	1.50	1.57	1.63	1.70
1.00	0.26	0.47	0.65	0.82	0.94	1.05	1.14	1.22	1.25	1.28	1.34	1.43	1.52	1.60	1.66	1.74
1.25	0.24	0.45	0.63	0.80	0.93	1.04	1.15	1.24	1.27	1.30	1.35	1.47	1.55	1.63	1.70	1.79
1.50	0.23	0.44	0.62	0.79	0.91	1.03	1.15	1.25	1.28	1.31	1.37	1.49	1.58	1.66	1.74	1.81
1.75	0.22	0.42	0.60	0.77	0.90	1.02	1.13	1.26	1.29	1.32	1.39	1.50	1.60	1.70	1.78	1.85
2.00	0.22	0.42	0.60	0.76	0.88	1.00	1.13	1.27	1.30	1.33	1.40	1.52	1.63	1.71	1.80	1.87
2.25	0.21	0.41	0.59	0.75	0.88	0.99	1.11	1.27	1.30	1.34	1.40	1.53	1.64	1.73	1.82	1.90
2.50	0.20	0.40	0.58	0.74	0.86	0.97	1.10	1.26	1.31	1.35	1.42	1.56	1.66	1.76	1.84	1.91
2.75	0.20	0.39	0.57	0.73	0.85	0.96	1.09	1.25	1.31	1.35	1.43	1.57	1.68	1.77	1.86	1.94
3.00	0.19	0.39	0.56	0.73	0.84	0.95	1.08	1.24	1.32	1.36	1.46	1.58	1.69	1.79	1.88	1.96
3.50	0.19	0.38	0.54	0.71	0.82	0.92	1.07	1.23	1.32	1.38	1.47	1.60	1.71	1.82	1.91	2.00
4.00	0.18	0.38	0.53	0.70	0.80	0.90	1.04	1.21	1.32	1.38	1.48	1.62	1.74	1.84	1.95	2.03
4.50	0.17	0.37	0.52	0.68	0.79	0.89	1.02	1.20	1.32	1.39	1.50	1.63	1.77	1.87	1.98	2.06
5.00	0.17	0.36	0.51	0.67	0.77	0.87	1.00	1.19	1.31	1.40	1.51	1.66	1.79	1.89	2.00	2.08
5.50	0.16	0.35	0.50	0.65	0.76	0.85	0.99	1.18	1.30	1.40	1.53	1.69	1.81	1.92	2.03	2.11
6.00	0.16	0.35	0.50	0.64	0.74	0.84	0.97	1.17	1.30	1.41	1.55	1.70	1.83	1.95	2.05	2.15
6.50	0.16	0.34	0.49	0.63	0.73	0.82	0.96	1.17	1.30	1.42	1.56	1.72	1.86	1.97	2.07	2.18
7.00	0.16	0.34	0.49	0.61	0.72	0.80	0.94	1.16	1.30	1.42	1.57	1.75	1.88	2.00	2.10	2.21
7.50	0.16	0.34	0.48	0.60	0.71	0.79	0.93	1.15	1.29	1.43	1.58	1.77	1.90	2.02	2.12	2.24
8.00	0.16	0.33	0.48	0.60	0.70	0.78	0.91	1.14	1.29	1.43	1.60	1.78	1.91	2.05	2.15	2.27
8.50	0.16	0.33	0.47	0.59	0.69	0.77	0.90	1.14	1.28	1.43	1.61	1.80	1.94	2.07	2.19	2.30
9.00	0.16	0.33	0.47	0.59	0.67	0.76	0.90	1.13	1.28	1.50	1.62	1.83	1.98	2.09	2.21	2.33

5. INPUT PREPARATION

5.1 Number Formats

The input for SDC requires both integers and decimal numbers. Integers are written without a decimal point and occupy the extreme right-hand columns of the field. All numbers used in the input are assumed to be positive so that there is no necessity for a sign. Zeroes may be represented by blanks. For example, the permissible format for the integer 5 in a field of three columns is [| | 5].

The position of the decimal point in a decimal field is indicated on the data sheet, is so interpreted in the code, and is not punched into the data card. Information for data card 1 is to be alphanumeric; that for card 2 is fixed point; cards 5 and 6 are in floating point; and card 3 is mixed, the first two fields in floating-point and the other fields in fixed-point formats.

In the floating-point fields, the decimal point is assumed to be between the first two columns of the field. The last two columns following the E contain the power of ten. For example, permissible formats: the number 1555 in a field of seven is written as [1|5|5|5|E|0|3], and the number of 1×10^{25} as [1|0|0|0|E|2|5]. If a number is zero, the entire field may be left blank.

5.2 Input Data Cards

Figure 19 shows an input data form. Four types of data cards are required for input to SDC: (1) title card; (2-3) control parameters and geometry specifications; (4) energy, mev, for each group; and (5-6) source strengths, photons/sec, for point, line, surface, or volume source, for each group.

5.2.1 Title Card

The first column of the title card is used for program control. Columns 2 through 72 may contain any desired information, alphabetic or numeric or any combination. Spacing is achieved by leaving columns blank. Columns 73-80 are not read by the machine, but may be used for identification.

ORNL DWG. 66-57

NAME: ______ JOB: ______ REQUEST: ______ DATE: ______

Card 1:

1 Job Description ... 72	80
0	1

Geometry — Card 2:

1 Type Geom	P*	4 Materials: Sh'd	Clad	Vol	Fill	12 Dose Target Mrad/Hr	19 Shield Thickness	24 Z, Distance to shield	29 Dist. from shield to P	34 H_L, Length of source	39 H_1 **	44 Ro Radius +	49 Dsplcment Distance	54 Clad Thickness	59 Angle θ Point Skew Line	T_a P_e	63 No. Grps.	V_a r_y	CCW Rotn.	P_N	Rd. 3	Fix R	Test	80
																								2

Card 3:

1 Area	9 Volume	17 Fact V	21 R(Rod)	26 N (Rod)	31 N(Asb)	36 T_{rc}	40 E (Asb)	45 Fill Dens.	Mat_{rc}	52 R_A or R_{Poly}	57 An. Clad Th	62 EMM	ENN	80
E	E													3

Energy, Mev, (Maximum of 12 Groups), see Columns 63-64. Never less than 0.1.

1 E (1)	6 E (2)	11 E (3)	16 E (4)	21 E (5)	26 E (6)	31 E (7)	36 E (8)	41 E (9)	46 E (10)	51 E (11)	56 E (12)	80
												4

Source Strength Photons/Second for point, line, surface, or volume source (Maximum of 12/Study as per Columns 63-64, Card 2).

1 S (1) / S (11)	8 S (2) / S (12)	15 S (3)	22 S (4)	29 S(5)	36 S (6)	43 S (7)	50 S (8)	57 S (9)	64 S (10)	80
E	E	E	E	E	E	E	E	E	E	5
E	E									6
E	E	E	E	E	E	E	E	E	E	5
E	E									6
E	E	E	E	E	E	E	E	E	E	5
E	E									6
E	E	E	E	E	E	E	E	E	E	5
E	E									6
E	E	E	E	E	E	E	E	E	E	5
E	E									6
E	E	E	E	E	E	E	E	E	E	5
E	E									6

Geometry Source Options, Col. 1-2, Card 2

1 Point
2 Line
3 Disk
4 Plane
5 Slab
6 Cylinder, Shield at Side
7 Cylinder, Shield at End
8 Sphere
9 Ring
10 Rod Cluster
11 Skew Line
12 Annular Cyl, SAS
13 Annular Cyl, SAE

To Fix R, Punch 1 in Col. 71, Card 2, and Enter R as Z in Cols. 24-28.

Material Options, Cols. 4-11, Card 2

1 Water
2 Aluminum
3 Iron
4 Lead
5 Uranium
6 Ordinary Concrete
7 Barytes Concrete
8 Magnetite Concrete
9 Ferrophos Concrete
10 Glass (Plate)
11 Glass (3.2 density, lead)
12 Glass (6.2 density, lead)
13 Zinc bromide
14 Air
15-17 Optional

Col. 65, Card 2: If user wishes to run same study, varying only the source, enter 1 here and new source strengths in card types 5-6. In such cases, the following setup applies:

Stack on: 1 blank for Card 5 only
2 blanks for Cards 5 and 6.

If Card 3 is to be read, there must be a 1 punched in Col. 70 of Card 2.

Note: Dimensions are in cm.

Tape: Normal output on 6 when Col. 62, Card 2 is blank. If output to be saved, enter 9 in this column.

Keypunch: Punch E's on Cards 5 and 6 only when a number is written to the left.

---

*P = dose point

**H_1 defined in report (ORNL-3041)

\+ Radius of disk, cylinder, ring or sphere, thickness of finite slab

Fig. 19. Shielding Design Calculation Data Sheet

5.2.2 Card 2

Input on this card is a mixture of integers and decimal numbers. The control parameters and geometry specifications are as follows.

1. Type of Geometry (Type Geom) columns 1-2: A choice of source-shield geometries is made.

   Permissible options are:

Code	Type Geom
1	Point source
2	Line source
3	Disk source
4	Infinite-plane source
5	Thick-slab volume source
6	Cylindrical volume source with shield at side
7	Cylindrical volume source with shield at end
8	Spherical volume source
9	Ring source
10	Rod-cluster source
11	Skew line
12	Annular cylinder, shield at side
13	Annular cylinder, shield at end

2. P*, column 3: A choice of points, 1, 2, 3, or 4, at which the flux is calculated for the line source as in Fig. 2, and for the cylindrical volume source with shield at side as in Fig. 6.

3. Materials, columns 4-5, 6-7, 8-9, 10-11: A choice is made from 17 options for the attenuation material considered for the shield, the clad, the volume source, and for fill. The material for the volume is that from which a volume source is fabricated or that which more nearly represents the volume material (see Fact V, item 3, card 3). The fill material is that which fills space between rods of a rod-cluster source. The parameters are entered as integers and are right-adjusted in the field.

Permissible options:

1	Water	8	Magnetite concrete
2	Aluminum	9	Ferrophos concrete
3	Iron	10	Glass (plate)
4	Lead	11	Glass (3.2 density, lead)
5	Uranium	12	Glass (6.2 density, lead)
6	Ordinary concrete	13	Zinc bromide
7	Barytes concrete	14	Air
		15-17	Optional

Currently, 14 of these options are available. Fifteen through seventeen may be used by supplying to the code tables of values described in Sect. 4, "Data Library Utilization." Any desired change in materials may be made simply by changing the specific tables concerned.

4. Dose Target, columns 12-18: Design dose rate in millirads/hr for which the shield is designed is entered here as a fixed-point number, XXXX.XXX. An iterative calculation is made to find the shield thickness that will produce the target dose. These columns are left blank, or enter zero when the dose rate is to be calculated.

5. Shield Thickness, columns 19-23: The shield thickness, in centimeters of shield material (see item 3), is entered here as a fixed-point number, XXXX.X. In a given study, either the target dose (item 4), or the shield thickness is given, but never both. The one omitted is left blank, or zero is entered.

6. Z, Distance to the Shield, columns 24-28: The distance in centimeters is measured from the surface of the source (center in case of rod cluster only) to the inside face of the shield. When the total distance from the source to the dose point is fixed (see item 20), the distance will be entered here as Z, and a 1 punch will be entered in column 71. This fixed point number is given as XXXX.X.

7. Distance from the Shield to P, columns 29-33: Measurement, in centimeters, from the outside surface of the shield to the point P (item 2) at which dose rate is to be calculated. It is given as a fixed-point number, XXXX.X, for each geometry option.

8. H_L, Length of Source, columns 34-38: Overall length or height (centimeters) of line, finite plane, finite slab, cylinder, rod cluster, skew line, or annular cylinder source. H_L is entered as a fixed-point number, XXXX.X.

9. H_1, columns 39-43: The distance (centimeters) from the bottom of a line, cylinder (CYLSAS), rod cluster, skew line, or annular cylinder (ANCLAS) source to a line drawn perpendicular to the source, or the extension of the source, from the dose point, or point of observation, as described in Figs. 2, 6, 10, 11, and 12. This distance is given as a fixed-point number, XXXX.X.

10. R_o, Radius, columns 44-48: The radius of the ring, disk source, spherical source, cylindrical volume source, or the outside radius of an annular cylinder is given, in centimeters, as a fixed-point number, XXXX.X.

11. Displacement Distance, columns 49-53: Used for disk and cylinder shield at end sources (CYLSAE). This is the distance (centimeters) from the projected centerline of the source to the dose point, that is, the distance through which the dose point is displaced from a normal position on the projected centerline. It is given as a fixed-point number, XXXX.X.

12. Clad Thickness, columns 54-58: Thickness of the cladding material that surrounds the volume source in the slab, sphere, or cylinder, is given, in centimeters, as a fixed-point number, XX.XXX.

13. Angle θ, columns 59-61: For the point source, this is defined to be the angle formed by a line drawn perpendicular to the shield from the source point and another line connecting the source point to the dose point, as in Fig. 1. For geometry option 11, this is the angle made by the skew line with the line parallel to the shield, as in Fig. 11. It is given, in degrees, as a fixed-point number, XX.X.

14. Tape, column 62: For normal purposes, output from SDC is written on logical 6, the IBM FORTRAN standard output tape. If for any

reason the user wishes to hold the output on tape, any available logical tape number, 0-9, may be written in this column. Otherwise, leave it blank.

15. Number of Groups (No. Grps), columns 63-64: The number of gamma-energy source groups into which the source is broken. This can be a maximum of 12 groups. A fission-product-source distribution of 9 to 12 groups can be obtained from the output of the PHOEBE code[8] for any given set of irradiation and decay conditions. NG is written as an integer, right-adjusted in the field.

16. Vary, column 65: If the user wishes to vary only the source strengths for a series of studies, he may do so by entering 1 in this column and writing additional sets of source strengths in cards 5 and 6. The last set of source-strength cards must be followed by a blank card (two blank cards if there are more than ten groups) to return the read cycle to card 1 if there are additional cases to be run. This is the only option in which the stacking of additional cases is done on blank cards. The normal procedure is to stack one case after the other, without blank cards.

17. Counterclockwise Rotation (CCW Rotn), columns 66-67: The normal rotation of the skew line is assumed to be clockwise (top toward shield), in which case the field is left blank. If rotation is counterclockwise, then an 11 is placed in the field.

18. P_N, columns 68-69: The number of sides in a polygonal rod cluster source is entered here as a fixed-point number, XX. P_N is defined to be the number of sides in a polygon (or triangle) assumed to represent one rod-cluster assembly: Leave blank if the assembly has a square cross-section.

19. Rd3, column 70: Card 3 is needed only when information that may be punched into it is needed. It will not be read unless a 1 is punched in this column. Leave blank if card 3 is not needed.

20. FIXR, column 71: Put a 1 in this column if total distance from the source to the dose point is to be fixed. When using this option, enter the total distance as Z, item 6.

21. Test, column 72: A number entered here will give an edit of many intermediate calculated values, useful for checking purposes only.

5.2.3 Card 3

This card will be read only if there is a 1 entered in column 70, card 2 (see item 19). It contains a mixture of floating-point and fixed-point data. A description of the parameters and geometry specifications follows.

1. Area, columns 1-8: Surface area (cm^2) for plane, slab, and disk sources. The value of area entered in this field is used to compute source-per-unit-area values rather than that calculated from dimensions. If the field is left blank, dimensions are used to calculate the area. The area is entered as a floating-point number, X.XXXXEXX.

2. Volume, columns 9-16: Volume (cm^3) for slab, cylinder, sphere, and annular cylinder sources. This value is used to calculate source-per-unit-volume values unless the field is blank. The volume is entered as a floating-point number, X.XXXXEXX.

3. Fact V, columns 17-20: When using a material within the volume mixture that does not have the correct values within the density tables, a correction to the density may be made. It may be defined to be the ratio of actual density of volume source material to density of material listed in cols 8 and 9 of card 2 (item 3). Fact V is a dimensionless fixed-point number, X.XXX, and is given with all volume sources. If a better number is not known, enter 1.0 when choosing these source options.

4. R (Rod), columns 21-25: Radius (centimeters) of one rod in a rod-cluster source. It is entered as a fixed-point number, XX.XXX.

5. N (Rod), columns 26-30: Number of rods per assembly, entered as a fixed-point number, XXXX.X.

6. N (Asb), columns 31-35: Number of assemblies in a rod cluster, entered as a fixed point number, XXX.XX.

7. T_{rc}, columns 36-39: Thickness, in centimeters, of rod cladding, entered as a fixed-point number X.XXX.

8. E (Asb), columns 40-44: Width, in centimeters, of a side or edge of a square assembly. It is used only if rod-cluster assemblies are square.

9. Fill Dens, columns 45-49: Density of material that fills space between rods in a rod cluster, entered as a fixed-point number, XX.XXX.

10. Mat_{rc}, columns 50-51: Rod-cladding material, entered as an integer, right-adjusted, from the material list in item 3, card 2.

11. R_A or R_{poly} columns 52-56: Radius, in centimeters, of annulus for an annular cylinder or radius determined by vertices of a polygon for rod-cluster source. This is a fixed-point number, entered as XXXX.X.

12. An. Clad Th, columns 57-61: Thickness of cladding on inside of annular cylinder, in centimeters, entered as XX.XXX.

13. EMM, columns 62-63, and ENN, columns 64-65: The number of intervals desired, for α and r respectively, in the double integral evaluated to compute the flux for the disk with displacement option. These values are used in DUBINT which is called by DISKS. See items 1 and 11 of card 2, geometry-option 3 description, and Fig. 3.

5.2.4 Card 4

Twelve fields, X.XXXX. Columns 1-5, 6-10, etc., are available to enter gamma photon energy in Mev for each group used to describe the source-energy distribution. The range $0.1 \leq E \leq 10.0$ Mev may be used with a maximum of 12 groups allotted to cover the energy range selected, regardless of size. (The number of values of energy must agree with the number of groups, item 15, card 2.)

5.2.5 Cards 5 and 6

Ten fields on card 5 and two fields on card 6, columns 1-7, 8-14, etc., are available for floating-point numbers, X.XXXEXX, defining the source strengths in photons/sec for each energy group for the total source. The source strengths for radiation from mixed fission products can be obtained from the results of a PHOEBE[8] program calculation for a given set of irradiation time, fission rate, and decay-time conditions. Card 6 is used only if 11 or 12 groups are used to describe the source. The number of values entered for source strengths must agree with the number of groups, item 15, card 2. These cards are repeated as many times as necessary if the source strengths for a given geometry and configuration are varied (see item 16, card 2).

Figure 20 shows an input data form for cards 5 and 6 if more than six of these types are required to cover the range of source strengths needed for a given case.

When running more than one case, the sets of cards 1-6 are stacked one behind the other. If, for a given case, several sets of source strengths are run, a blank card follows the last set if the number of groups is $\geq$ 10; use two blank cards for more than ten groups. The blank cards serve to return the read cycle to the title, card 1.

6. OPERATION

The code was written in FORTRAN II for the IBM 7090 computer. Only input, output, and the system tapes are used.

ORNL DWG. 66-58

NAME _____ REQUEST _____ DATE _____

Source Strength Photons/Sec., for point, line, surface, or volume source (Max. of 12/Study as Per Col. 63-4, Card 2)

1 S(1)/S(11)	8 S(2)/S(12)	15 S(3)	22 S(4)	29 S(5)	36 S(6)	43 S(7)	50 S(8)	57 S(9)	64 S(10)	73 80
▲ E	▲ E	▲ E	▲ E	▲ E	▲ E	▲ E	▲ E	▲ E	▲ E	
▲ E	▲ E									
▲ E	▲ E	▲ E	▲ E	▲ E	▲ E	▲ E	▲ E	▲ E	▲ E	
▲ E	▲ E									
▲ E	▲ E	▲ E	▲ E	▲ E	▲ E	▲ E	▲ E	▲ E	▲ E	
▲ E	▲ E									
▲ E	▲ E	▲ E	▲ E	▲ E	▲ E	▲ E	▲ E	▲ E	▲ E	
▲ E	▲ E									
▲ E	▲ E	▲ E	▲ E	▲ E	▲ E	▲ E	▲ E	▲ E	▲ E	
▲ E	▲ E									
▲ E	▲ E	▲ E	▲ E	▲ E	▲ E	▲ E	▲ E	▲ E	▲ E	
▲ E	▲ E									
▲ E	▲ E	▲ E	▲ E	▲ E	▲ E	▲ E	▲ E	▲ E	▲ E	
▲ E	▲ E									
▲ E	▲ E	▲ E	▲ E	▲ E	▲ E	▲ E	▲ E	▲ E	▲ E	
▲ E	▲ E									
▲ E	▲ E	▲ E	▲ E	▲ E	▲ E	▲ E	▲ E	▲ E	▲ E	
▲ E	▲ E									
▲ E	▲ E	▲ E	▲ E	▲ E	▲ E	▲ E	▲ E	▲ E	▲ E	
▲ E	▲ E									
▲ E	▲ E	▲ E	▲ E	▲ E	▲ E	▲ E	▲ E	▲ E	▲ E	
▲ E	▲ E									
▲ E	▲ E	▲ E	▲ E	▲ E	▲ E	▲ E	▲ E	▲ E	▲ E	
▲ E	▲ E									
▲ E	▲ E	▲ E	▲ E	▲ E	▲ E	▲ E	▲ E	▲ E	▲ E	
▲ E	▲ E									
▲ E	▲ E	▲ E	▲ E	▲ E	▲ E	▲ E	▲ E	▲ E	▲ E	
▲ E	▲ E									
▲ E	▲ E	▲ E	▲ E	▲ E	▲ E	▲ E	▲ E	▲ E	▲ E	
▲ E	▲ E									
▲ E	▲ E	▲ E	▲ E	▲ E	▲ E	▲ E	▲ E	▲ E	▲ E	
▲ E	▲ E									
▲ E	▲ E	▲ E	▲ E	▲ E	▲ E	▲ E	▲ E	▲ E	▲ E	
▲ E	▲ E									
▲ E	▲ E	▲ E	▲ E	▲ E	▲ E	▲ E	▲ E	▲ E	▲ E	
▲ E	▲ E									
▲ E	▲ E	▲ E	▲ E	▲ E	▲ E	▲ E	▲ E	▲ E	▲ E	
▲ E	▲ E									
▲ E	▲ E	▲ E	▲ E	▲ E	▲ E	▲ E	▲ E	▲ E	▲ E	
▲ E	▲ E									
▲ E	▲ E	▲ E	▲ E	▲ E	▲ E	▲ E	▲ E	▲ E	▲ E	
▲ E	▲ E									
▲ E	▲ E	▲ E	▲ E	▲ E	▲ E	▲ E	▲ E	▲ E	▲ E	
▲ E	▲ E									
▲ E	▲ E	▲ E	▲ E	▲ E	▲ E	▲ E	▲ E	▲ E	▲ E	
▲ E	▲ E									
▲ E	▲ E	▲ E	▲ E	▲ E	▲ E	▲ E	▲ E	▲ E	▲ E	
▲ E	▲ E									
▲ E	▲ E	▲ E	▲ E	▲ E	▲ E	▲ E	▲ E	▲ E	▲ E	
▲ E	▲ E									
▲ E	▲ E	▲ E	▲ E	▲ E	▲ E	▲ E	▲ E	▲ E	▲ E	
▲ E	▲ E									
▲ E	▲ E	▲ E	▲ E	▲ E	▲ E	▲ E	▲ E	▲ E	▲ E	
▲ E	▲ E									
▲ E	▲ E	▲ E	▲ E	▲ E	▲ E	▲ E	▲ E	▲ E	▲ E	
▲ E	▲ E									
▲ E	▲ E	▲ E	▲ E	▲ E	▲ E	▲ E	▲ E	▲ E	▲ E	
▲ E	▲ E									
▲ E	▲ E	▲ E	▲ E	▲ E	▲ E	▲ E	▲ E	▲ E	▲ E	
▲ E	▲ E									
▲ E	▲ E	▲ E	▲ E	▲ E	▲ E	▲ E	▲ E	▲ E	▲ E	
▲ E	▲ E									
▲ E	▲ E	▲ E	▲ E	▲ E	▲ E	▲ E	▲ E	▲ E	▲ E	
▲ E	▲ E									
▲ E	▲ E	▲ E	▲ E	▲ E	▲ E	▲ E	▲ E	▲ E	▲ E	
▲ E	▲ E									
▲ E	▲ E	▲ E	▲ E	▲ E	▲ E	▲ E	▲ E	▲ E	▲ E	
▲ E	▲ E									
▲ E	▲ E	▲ E	▲ E	▲ E	▲ E	▲ E	▲ E	▲ E	▲ E	
▲ E	▲ E									
▲ E	▲ E	▲ E	▲ E	▲ E	▲ E	▲ E	▲ E	▲ E	▲ E	
▲ E	▲ E									
▲ E	▲ E	▲ E	▲ E	▲ E	▲ E	▲ E	▲ E	▲ E	▲ E	
▲ E	▲ E									
▲ E	▲ E	▲ E	▲ E	▲ E	▲ E	▲ E	▲ E	▲ E	▲ E	
▲ E	▲ E									
▲ E	▲ E	▲ E	▲ E	▲ E	▲ E	▲ E	▲ E	▲ E	▲ E	
▲ E	▲ E									
▲ E	▲ E	▲ E	▲ E	▲ E	▲ E	▲ E	▲ E	▲ E	▲ E	

32

UCN-4513
(3 4-63)

Fig. 20. Shielding Design Calculation Source Strength Data Sheet

REFERENCES

1. E. P. Blizard, "Nuclear Radiation Shielding," Nuclear Engineering Handbook, H. Etherington, ed., Sect. 7-3, pp 7-60 to 7-116, McGraw-Hill, New York, 1958.

2. T. Rockwell, Reactor Shielding Design Manual, TID-7004 (1956).

3. J. Moteff, Miscellaneous Data for Shielding Calculations, APEX-176 (1954).

4. E. P. Blizard and L. S. Abbott, Reactor Handbook, Vol. III, Part B, "Shielding," Interscience Publishers, New York (1962).

5. J. J. Taylor and F. E. Obenshain, Flux from Homogeneous Cylinders Containing Uniform Source Distributions, WAPD-RM-213 (December 1953).

6. R. S. Burington, Handbook of Mathematical Tables and Formulas, Third Edition, Part One, Sect. VII, "Table of Integrals," Handbook Publishers, Inc., Sandusky, Ohio, 1957.

7. C. Hastings, Approximations for Digital Computers, Princeton University Press, 1955.

8. E. D. Arnold, PHOEBE - A Code for Calculating Beta and Gamma Activity and Spectra for ^{235}U Fission Products, ORNL-3931 (to be published).

ORNL-3041
UC-32 — Mathematics and Computers

INTERNAL DISTRIBUTION

1. Biology Library
2-4. Central Research Library
5. Reactor Division Library
6-7. ORNL — Y-12 Technical Library Document Reference Section
8-207. Laboratory Records Department
208. Laboratory Records, ORNL R.C.
209-218. E. D. Arnold
219. F. L. Culler
220. D. E. Ferguson
221. W. H. Jordan
222. C. E. Larson
223. H. G. MacPherson
224. F. C. Maienschein
225-284. B. F. Maskewitz
285. S. K. Penny
286. M. J. Skinner
287. A. M. Weinberg
288. P. H. Emmett (consultant)
289. J. J. Katz (consultant)
290. C. W. J. Wende (consultant)
291. C. E. Winters (consultant)
292. G. Dessauer (consultant)
293. M. L. Goldberger (consultant)
294. M. H. Kalos (consultant)
295. L. V. Spencer (consultant)

EXTERNAL DISTRIBUTION

296. John H. Barrett, Mathematics Department, University of Tennessee
297. J. A. Swartout, 270 Park Avenue, New York 17, New York
298. Research and Development Division, AEC, ORO
299-645. Given distribution as shown in TID-4500 under Mathematics and Computers category (75 copies — CFSTI)