ORNL
MASTER COPY

143

ORNL-3997
UC-4 – Chemistry

X-RAY DIFFRACTION DATA ON LIQUID WATER IN THE TEMPERATURE RANGE 4 TO 200°C

A. H. Narten
M. D. Danford
H. A. Levy

OAK RIDGE NATIONAL LABORATORY
operated by
UNION CARBIDE CORPORATION
for the
U.S. ATOMIC ENERGY COMMISSION

Printed in USA. Price $5.00. Available from the Clearinghouse for Federal Scientific and Technical Information, National Bureau of Standards, U.S. Department of Commerce, Springfield, Virginia 22151.

LEGAL NOTICE

This report was prepared as an account of Government sponsored work. Neither the United States, nor the Commission, nor any person acting on behalf of the Commission:

A. Makes any warranty or representation, expressed or implied, with respect to the accuracy, completeness, or usefulness of the information contained in this report, or that the use of any information, apparatus, method, or process disclosed in this report may not infringe privately owned rights; or

B. Assumes any liabilities with respect to the use of, or for damages resulting from the use of any information, apparatus, method, or process disclosed in this report.

As used in the above, "person acting on behalf of the Commission" includes any employee or contractor of the Commission, or employee of such contractor, to the extent that such employee or contractor of the Commission, or employee of such contractor prepares, disseminates, or provides access to, any information pursuant to his employment or contract with the Commission, or his employment with such contractor.

ORNL-3997

Contract No. W-7405-eng-26

CHEMISTRY DIVISION

X-RAY DIFFRACTION DATA ON LIQUID WATER IN THE TEMPERATURE RANGE 4 TO 200°C

A. H. Narten

M. D. Danford

H. A. Levy

SEPTEMBER 1966

OAK RIDGE NATIONAL LABORATORY
Oak Ridge, Tennessee
operated by
UNION CARBIDE CORPORATION
for the
U.S. ATOMIC ENERGY COMMISSION

ABSTRACT

The scattering of x-rays from the free surface of liquid water in equilibrium with water vapor has been measured and analyzed at 4, 25, 50, 75, 100, 150, and 200°C. Deuterium oxide at 4°C was also studied. The diffractometer used was specially designed for the study of liquid samples. At each scattering angle, up to 600,000 counts were recorded to assure meaningful counting statistics, and data collection was extended to values of 16 in $s = (4\pi/\lambda) \sin\theta$. In this report, both the raw data and the intensity and radial distribution functions derived from them are presented in tabulated form. The experimental radial distribution functions are in agreement with most of the previously published work on water, showing, however, much higher resolution. They show deviations from a uniform distribution of distances out to 8 Å at room temperature, and significant but gradual changes occur with increasing temperature.

Interpretation of the x-ray scattering in terms of a model of the structure of water will be presented in a later report.

CONTENTS

ABSTRACT iii

1. INTRODUCTION 1

2. EXPERIMENTAL 2

2.1 Diffractometer 2

2.2 Materials and Sample Holders 2

2.3 Data Collection 5

3. RESULTS 5

3.1 Raw Data 5

3.2 Reduced Intensity and Radial Distribution Functions 99

4. DISCUSSION 144

4.1 Reduced Intensities 144

4.2 Radial Distribution Functions 144

4.3 Comparison with Previous Work 148

4.4 Conclusions 148

5. REFERENCES 151

1. INTRODUCTION

The first x-ray diffraction patterns from liquid water were obtained by Meyer (1930)[1], Stewart (1931)[2] and Amaldi (1931)[3]. This work, together with the known properties of the isolated water molecule and the ice lattice, led Bernal and Fowler (1933)[11] to propose their fruitful model of water structure.

Katzoff (1934)[4] was the first to apply to water the method of Fourier analysis. Morgan and Warren (1938)[5] analyzed the x-ray scattering from liquid water at five temperatures between the melting and boiling points. Their classical work lead to the eventual abandonment of the Bernal and Fowler model of water structure.

Since 1938 various x-ray diffraction studies of water have been published[6-10]; these investigations (with one exception[9,10], to be discussed in section 4) have confirmed Morgan and Warren's results, without giving much more insight into the average spatial arrangement of the molecules in liquid water. Models of water structure have been proposed in increasing number[13] since the pioneer work of Bernal and Fowler. Diffraction data alone yield, for liquid systems, only the probability of finding atoms at a radial distance r from any origin atom. On the other hand, any complete model of water structure must lend itself to the calculation of a radial distribution curve in agreement with that derived from diffraction data. It has been the purpose of our work to obtain a set of x-ray diffraction data on liquid water which extends and improves upon Morgan and Warren's work both in resolution and temperature range. Our results are presented in tabulated form in this report.

A model of water structure, in quantitative agreement with the diffraction data over the whole range in temperature and scattering angle covered by our experiments, will be presented elsewhere.[14]

2. EXPERIMENTAL

The diffractometer, the procedure for data collection, the various corrections applied to the raw data, and their final evaluation have been discussed in detail elsewhere[12]. Only a short outline will be given in this section.

2.1 Diffractometer. The diffraction measurements were made with a diffractometer specially designed for the study of liquids. The diffraction pattern from the horizontal surface of the liquid sample was obtained with a divergent beam technique similar to the Bragg-Brentano system used for powder samples. The instrument provides for simultaneous angular motion of the x-ray tube and detector about a horizontal axis lying in the liquid surface. This method eliminates sample holder absorption and scattering. Monochromatic MoKα radiation is obtained through the use of a bent and ground crystal monochromator mounted in the diffracted beam.

2.2 Materials and Sample Holders. Triple distilled water of normal isotopic composition was used in the experiments. Heavy water (99.25% D, 1.65% O-18, 0.12% O-17) was studied at one temperature (4°C).

Two different sample containers were used. At 4 and 25°C, the samples were contained in a lucite tray approximately 3.75" long, 1" wide, and 1.75" deep (Fig. 1). A coil of 0.375" copper tubing around the inside of this tray was connected to a constant temperature bath. Temperature control was within 0.5°C. An air-tight cover with a window of lucite foil prevented evaporation of the sample.

ORNL-DWG. 66-6279

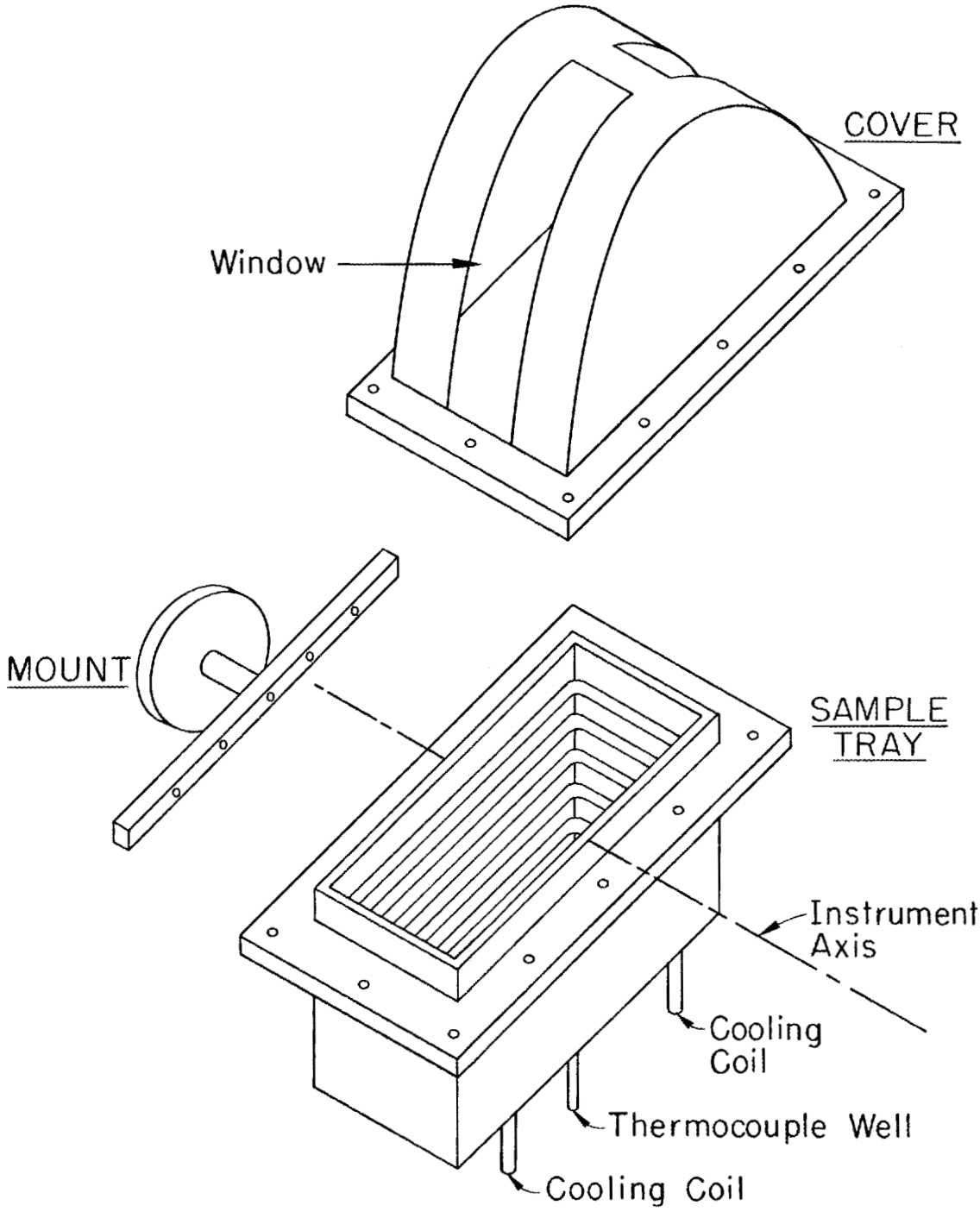

Fig. 1. Sample Holder for Work at Low Temperature.

For the high temperature experiments, cylindrical beryllium cups (1.625" I.D.) were used. A tightly fitting teflon liner (0.030" wall) protected the inside of the beryllium cups from corrosion. The arrangement of sample cup and furnace is shown in Fig. 2. The inside of the sample container was filled with water to a sample depth of 0.8". The experiments below 100°C were performed at atomopheric pressure; above 100°C, the sample was contained under its own vapor pressure. The wall thickness of the beryllium cups was 0.020" up to 150°C, and 0.040" at 200°C. Temperature control was approximately 1°C at 200°C, and closer at the lower temperatures.

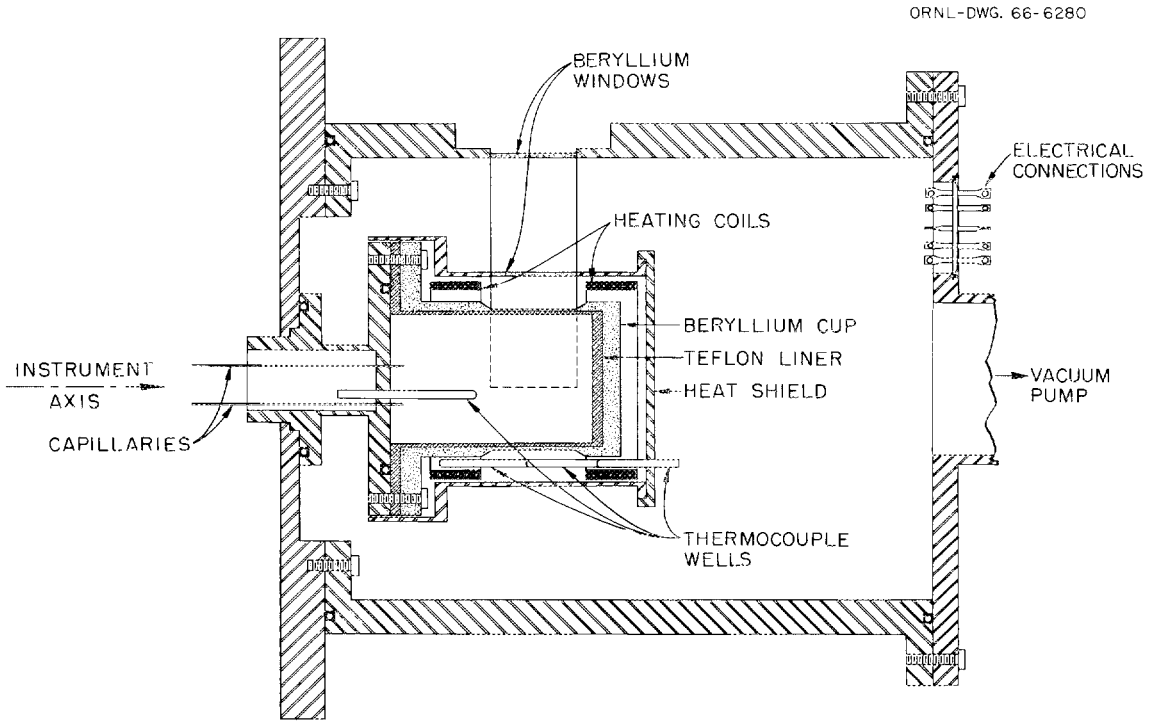

Fig. 2. Sample Holder and Furnace for Work at High Temperature.

2.3 Data Collection. Scattered intensities were measured with various beam divergences, ranging from 0.5 degrees at the lowest scattering angles to 4 degrees at the highest angles. The times for a fixed number of counts, ranging from 100,000 to 600,000, were measured at 0.25 to 1 degree intervals in scattering angle. The accumulated counts were chosen to hold statistical errors in the reduced intensity function approximately uniform. As the diffraction pattern showed interference throughout the observable range of the instrument[12] (to $s_{max} \equiv (4\pi/\lambda) \sin \theta_{max} = 16$, θ being the half-scattering angle), the data are appreciably more extensive than the earlier ones[1-10].

3. RESULTS

In this section the experimental data and the results derived from them are tabulated in the format of the computer programs used. The procedure for data treatment falls into two stages. In the first, the raw data in various scattering angle ranges are placed on a consistent scale and appropriate corrections are applied[12]. In the second, data reduction and Fourier inversion are carried out. A brief description of each program is given in order to explain its function and clarify the nomenclature.

3.1 Raw Data. The output of this program is divided into four parts. The first two parts present the experimental data under the headings of Data, and Summary of Data and Corrections Before Normalization. The third part describes how the sections were normalized to a certain size divergence slit, and the fourth part gives the computed relative intensities[12].

In the following table the definitions of various terms are given in the order of appearance (some are omitted since they are self explanatory).

3.1.1 DATA

SECTION	refers to the portion of scattering angles covered.
RUN	is the sequence number of the run over a particular section.
DEG. DIV.	is the size of the divergence slit.
T	is the time in minutes necessary to record a fixed number of accumulated counts for a given scattering angle (Format 9F8.2).
NUMBER OF T	is the number of angles contained in a section. Sections containing more than one run overlap adjacent sections; here each run goes over (number of T)/(number of runs) angles.

3.1.2 SUMMARY OF DATA AND CORRECTIONS BEFORE NORMALIZATION

NUMBER OF RUNS	is the number of repeat runs over a particular section.
NUMBER OF THETAS	is the number of angles contained in the section.
DELTA THETA	is the angular increment.
THETA MIN,THETA MAX	are the angles at which a section starts and ends.
NUMBER OF COUNTS	is the accumulated count taken at each θ
BACKGROUND	is the background in counts per minute.
2*ALPHA*MU	is the input for the penetration correction[12], $2\alpha\mu$, with α the width of the beam at the sample surface, and μ the linear absorption coefficient.

3.1.3 NORMALIZATION

SECTION	refers here to all portions of scattering angles covered with the same size divergence slit.
R	is the factor which scales a section to a standard size divergence slit.

3.1.4 RELATIVE INTENSITIES

S	is the value $(4\pi/\lambda)\sin\theta$.
THETA	is half the scattering angle in degrees.
DI	is the relative intensity, not as yet normalized to the independent atomic scattering, but corrected for penetration, polarization and background radiation[12]. The atomic absorption coefficients for oxygen and hydrogen were obtained from the literature[15].
ERROR	is the statistical error associated with DI.

DATA FOR D_2O at 4°C

GROUP

SECTION 1, RUN 1, 1/2 DEG. DIV.

NUMBER OF T IS 33

T	T	T	T	T	T	T	T	T	T
21.74	18.61	15.92	13.28	10.96	9.09	7.72	6.79	6.34	6.25
6.48	7.03	7.71	8.58	9.41	10.17	10.74	11.17	11.51	11.62
11.74	11.79	12.16	13.14	14.67	16.79	19.52	22.88	26.19	29.25
32.30	34.41	36.14							

GROUP 2

SECTION 1, RUN 2, 1/2 DEG. DIV.

NUMBER OF T IS 33

T	T	T	T	T	T	T	T	T	T
22.98	19.87	16.74	14.04	11.54	9.67	8.13	7.17	6.66	6.65
6.94	7.50	8.20	9.10	9.94	10.75	11.36	11.77	12.12	12.23
12.37	12.48	12.97	13.76	15.51	17.72	20.55	24.24	27.53	31.09
33.80	36.09	37.84							

GROUP 3

SECTION 2, RUNS 1 AND 2, 1/2 DEG. DIV.

NUMBER OF T IS 8

T	T	T	T	T	T	T	T	T	T
38.80	39.73	40.48	40.86	40.39	41.43	42.33	43.08		

GROUP 4

SECTION 3, RUN 1, 2 DEG. DIV.

NUMBER OF T IS 35

T	T	T	T	T	T	T	T	T	T
10.64	11.11	11.29	11.43	11.58	11.87	12.34	12.97	13.39	15.03
16.22	17.74	19.36	20.94	22.56	24.16	25.32	26.49	27.59	28.34
29.54	30.92	32.03	33.79	35.60	38.14	40.39	43.49	46.32	49.96
53.33	56.84	60.88	64.20	67.34					

GROUP 5

SECTION 3, RUN 2, 2 DEG. DIV.

NUMBER OF T IS 35

T	T	T	T	T	T	T	T	T	T
9.89	10.29	10.45	10.59	10.79	11.00	11.47	12.12	12.92	13.93
15.15	16.49	18.00	19.38	21.00	22.57	23.56	24.59	25.30	25.36
27.39	28.53	30.02	31.44	33.33	35.50	37.90	40.59	43.38	45.80
50.21	53.61	56.77	60.02	63.52					

GROUP 6

SECTION 3, RUN 3, 2 DEG. DIV.

NUMBER OF T IS 35

T	T	T	T	T	T	T	T	T	T
10.11	10.51	10.64	10.74	10.85	11.15	11.66	12.20	12.98	14.14
15.32	16.69	18.24	19.80	21.39	22.69	23.96	25.01	25.96	27.01
27.92	29.10	30.31	31.76	33.53	35.68	38.20	40.67	43.69	45.94
50.30	53.24	56.73	59.93	62.58					

GROUP 7

SECTION 4, RUNS 1,2,3, 2 DEG. DIV.

NUMBER OF T IS 9

T	T	T	T	T	T	T	T	T	T
70.67	73.90	77.94	66.26	69.31	72.16	65.50	69.02	71.72	

GROUP 8

SECTION 5, RUN 1, 4 DEG. DIV.

NUMBER OF T IS 42

T	T	T	T	T	T	T	T	T	T
12.35	12.91	13.49	14.20	14.84	15.42	16.26	17.24	18.21	19.21
20.19	21.23	22.21	22.97	24.03	25.07	25.74	26.27	27.56	27.79
28.39	29.13	29.64	30.22	30.98	31.64	32.18	32.84	33.90	34.20
34.84	35.28	35.45	36.03	36.64	37.12	37.31	37.26	37.52	37.30
37.66	37.07								

GROUP 9

SECTION 5, RUN 2, 4 DEG. DIV.

NUMBER OF T IS 42

T	T	T	T	T	T	T	T	T	T
12.43	13.05	13.40	14.29	14.82	15.44	16.28	17.23	18.15	19.07
19.99	21.06	21.79	23.07	24.09	24.74	25.21	26.01	27.00	27.37
28.17	28.80	29.25	30.00	30.81	31.55	32.00	32.81	33.40	33.86
34.84	35.31	35.73	35.88	36.37	36.21	36.79	36.96	37.21	37.40
37.14	37.11								

GROUP 10

SECTION 5, RUN 3, 4 DEG. DIV.

NUMBER OF T IS 42

T	T	T	T	T	T	T	T	T	T
12.39	12.98	13.60	14.22	14.91	15.60	16.34	17.33	18.00	19.06
20.07	21.04	22.03	23.02	24.03	24.89	25.55	26.42	27.03	27.69
28.40	29.22	29.48	30.41	30.86	31.68	32.23	32.88	33.34	34.29
34.98	35.28	35.55	36.20	36.49	36.90	37.10	37.04	37.52	37.43
37.02	37.46								

GROUP 11

SECTION 5, RUN 4, 4 DEG. DIV.

NUMBER OF T IS 42

T	T	T	T	T	T	T	T	T	T
12.27	12.84	13.33	14.07	14.62	15.42	16.01	17.05	17.37	18.74
19.56	20.77	21.42	22.44	23.34	24.21	24.83	25.37	26.20	26.81
27.35	27.75	28.65	28.99	29.45	30.20	30.60	31.25	31.32	32.65
33.28	33.62	34.10	34.66	34.93	34.86	35.24	35.24	35.30	35.57
35.72	35.47								

GROUP 12

SECTION 5, RUN 5, 4 DEG. DIV.

NUMBER OF T IS 42

T	T	T	T	T	T	T	T	T	T
12.33	13.03	13.53	14.08	14.77	15.53	16.35	17.09	18.05	19.09
19.89	20.79	21.92	22.96	23.88	24.67	25.54	26.32	27.07	27.52
28.11	28.80	29.61	29.97	30.62	31.29	32.03	32.46	33.36	33.75
34.29	34.63	35.49	35.50	36.00	36.24	36.61	36.64	37.02	37.21
36.99	36.96								

GROUP 13

SECTION 5, RUN 6, 4 DEG. DIV.

T	T	T	T	T	T	T	T	T	T
12.62	13.19	13.64	14.34	14.99	15.74	16.60	17.40	18.34	19.13
20.19	21.21	22.38	23.51	24.31	25.00	25.86	26.65	27.23	28.12
28.52	29.30	30.07	30.48	31.26	32.03	32.54	33.03	34.09	34.57
34.89	35.94	36.26	36.44	36.80	37.25	37.47	37.43	37.78	37.41
37.56	37.46								

GROUP 14

SECTION 5, RUN 7, 4 DEG. DIV.

NUMBER OF T IS 42

T	T	T	T	T	T	T	T	T	T
12.52	13.14	13.68	14.25	15.09	15.68	16.49	17.39	18.27	19.01
20.08	21.09	22.14	23.28	24.21	24.87	25.79	26.25	27.22	27.82
28.39	28.75	29.47	30.16	30.73	31.56	32.22	33.02	33.51	34.13
34.73	35.18	35.68	36.37	36.10	36.54	36.99	37.01	37.14	37.28
37.31	37.35								

GROUP 15

SECTION 5, RUN 8, 4 DEG. DIV.

NUMBER OF T IS 42

T	T	T	T	T	T	T	T	T	T
12.48	12.99	13.61	14.18	14.92	15.58	16.49	17.25	18.27	19.09
20.21	21.04	22.07	23.04	23.85	24.40	25.33	26.28	26.85	27.62
28.04	28.52	29.18	30.03	30.42	31.14	31.70	32.69	33.19	33.80
34.34	34.97	35.37	36.04	36.40	36.45	36.72	36.97	36.58	36.96
36.98	37.28								

GROUP 16

SECTION 5, RUN 9, 4 DEG. DIV.

NUMBER OF T IS 42

T	T	T	T	T	T	T	T	T	T
12.47	13.05	13.59	14.31	14.77	15.64	16.51	17.32	18.19	19.22
20.34	21.30	22.23	23.28	23.97	24.85	25.65	26.47	27.03	27.67
28.25	28.89	29.59	30.06	31.08	31.09	32.07	32.84	33.45	34.00
34.87	35.14	35.68	36.10	36.61	37.04	37.46	37.08	37.52	37.27
37.22	37.50								

GROUP 17

SECTION 5, RUN 10, 4 DEG. DIV.

NUMBER OF T IS 42

T	T	T	T	T	T	T	T	T	T
12.60	13.18	13.64	14.54	15.12	15.89	16.62	17.64	18.30	19.37
20.41	21.61	22.41	23.48	24.41	25.21	26.10	26.61	27.17	28.12
28.64	29.42	29.92	30.57	31.12	31.85	32.69	33.32	33.37	34.63
35.17	35.68	36.19	36.74	37.07	37.65	37.45	37.53	38.02	38.08
38.00	38.17								

GROUP 18

SECTION 6, RUNS 1 - 10, 4 DEG. DIV.

NUMBER OF T IS 30

T	T	T	T	T	T	T	T	T	T
37.78	37.38	37.53	37.19	37.25	36.87	37.00	37.11	36.91	35.34
35.20	35.12	36.84	35.91	36.53	37.64	37.81	37.51	36.36	35.94
37.02	36.93	36.94	36.43	37.38	37.46	37.06	38.00	37.34	37.52

GROUP 19

SECTION 7, RUN 1, 4 DEG. DIV.

NUMBER OF T IS 15

T	T	T	T	T	T	T	T	T	T
75.47	75.36	74.57	74.27	73.91	73.38	72.48	71.68	70.75	69.21
68.08	66.76	65.12	63.26	61.36					

GROUP 20

SECTION 7, RUN 2, 4 DEG. DIV.

NUMBER OF T IS 15

T	T	T	T	T	T	T	T	T	T
74.35	73.97	73.86	73.43	73.09	72.56	72.04	71.26	69.59	68.54
66.85	65.98	64.21	62.69	61.48					

GROUP 21

SECTION 7, RUN 3, 4 DEG. DIV.

NUMBER OF T IS 15

T	T	T	T	T	T	T	T	T	T
74.68	74.20	74.42	73.25	72.92	72.51	71.68	70.99	70.23	69.07
67.44	66.29	64.46	62.78	61.41					

GROUP 22

SECTION 7, RUN 4, 4 DEG. DIV.

NUMBER OF T IS 15

T	T	T	T	T	T	T	T	T	T
76.10	75.64	75.00	74.69	74.10	73.49	72.99	72.04	71.19	69.81
68.68	66.99	65.50	63.30	61.40					

GROUP 23

SECTION 7, RUN 5, 4 DEG. DIV.

NUMBER OF T IS 15

T	T	T	T	T	T	T	T	T	T
75.14	75.50	74.60	73.87	72.99	72.40	72.03	71.64	70.44	68.80
67.61	66.04	64.60	62.74	60.88					

SUMMARY OF DATA AND CORRECTIONS BEFORE NORMALIZATION

SECTION 1

NUMBER OF RUNS IS 2

NUMBER OF THETAS IS 33

DELTA THETA .250

THETA MIN 4.000

THETA MAX 12.000

NUMBER OF COUNTS IS 100000.00

BACKGROUND 1.87

CORRECTED FOR POLARIZATION

FACTOR FOR PENETRATION CORRECTION(2*ALPHA*MU) IS .33000

SECTION 2

NUMBER OF RUNS IS 2

NUMBER OF THETAS IS 4

DELTA THETA .500

THETA MIN 12.500

THETA MAX 14.000

NUMBER OF COUNTS IS 100000.00

BACKGROUND 1.87

CORRECTED FOR POLARIZATION

FACTOR FOR PENETRATION CORRECTION(2*ALPHA*MU) IS .33000

SECTION 3

NUMBER OF RUNS IS 3

NUMBER OF THETAS IS 36

DELTA THETA .500

THETA MIN 12.000

THETA MAX 29.000

NUMBER OF COUNTS IS 300000.00

BACKGROUND 2.79

CORRECTED FOR POLARIZATION

FACTOR FOR PENETRATION CORRECTION(2*ALPHA*MU) IS 1.32000

SECTION 4

NUMBER OF RUNS IS 3

NUMBER OF THETAS IS 3

DELTA THETA .500

THETA MIN 29.500

D_2O at 4°C

THETA MAX 30.500

NUMBER OF COUNTS IS 300000.00

BACKGROUND 2.79

CORRECTED FOR POLARIZATION

FACTOR FOR PENETRATION CORRECTION(2*ALPHA*MU) IS 1.32000

SECTION 5

NUMBER OF RUNS IS 10

NUMBER OF THETAS IS 42

DELTA THETA .500

THETA MIN 29.500

THETA MAX 50.000

NUMBER OF COUNTS IS 500000.00

BACKGROUND 2.60

CORRECTED FOR POLARIZATION

FACTOR FOR PENETRATION CORRECTION(2*ALPHA*MU) IS 2.64000

SECTION 6

NUMBER OF RUNS IS 10

NUMBER OF THETAS IS 3

DELTA THETA 1.000

THETA MIN 50.500

THETA MAX 52.500

NUMBER OF COUNTS IS 500000.00

BACKGROUND 2.60

CORRECTED FOR POLARIZATION

FACTOR FOR PENETRATION CORRECTION(2*ALPHA*MU) IS 2.64000

SECTION 7

NUMBER OF RUNS IS 5

NUMBER OF THETAS IS 15

DELTA THETA 1.000

THETA MIN 50.500

THETA MAX 64.500

NUMBER OF COUNTS IS 500000.00

BACKGROUND 2.28

CORRECTED FOR POLARIZATION

FACTOR FOR PENETRATION CORRECTION(2*ALPHA*MU) IS 2.64000

```
                    NORMALIZATION
NUMBER OF SECTIONS NORMALIZED TO SUCCEEDING SECTIONS IS    1
NUMBER OF SECTIONS REQUIRING NO NORMALIZATION IS     1
NUMBER OF SECTIONS NORMALIZED TO PRECEDING SECTIONS IS    2
        NORMALIZATION TO SUCCEEDING SECTIONS
                SECTION    1
NUMBER OF THETAS IS    37
NUMBER OF OVERLAP POINTS WITH FOLLOWING SECTION    5
NUMBER OF OVERLAP POINTS WITH PRECEDING SECTION IS    0
R IS    3.25412
        SECTIONS WITH NO NORMALIZATION
                SECTION    1
NUMBER OF THETAS IS    38
NUMBER OF OVERLAP POINTS WITH FOLLOWING SECTION    3
NUMBER OF OVERLAP POINTS WITH PRECEDING SECTION IS    5
        NORMALIZATION TO PRECEDING SECTIONS
                SECTION    1
NUMBER OF THETAS IS    45
NUMBER OF OVERLAP POINTS WITH FOLLOWING SECTION    3
NUMBER OF OVERLAP POINTS WITH PRECEDING SECTION IS    3
R IS    .51902
                SECTION    2
NUMBER OF THETAS IS    15
NUMBER OF OVERLAP POINTS WITH FOLLOWING SECTION    0
NUMBER OF OVERLAP POINTS WITH PRECEDING SECTION IS    3
R IS    .52480
```

D_2O at 4°C

S	DI	THETA	ERROR
1.233	12266.18	4.00	40.4192
1.310	14690.77	4.25	14.8941
1.387	17828.12	4.50	18.0981
1.464	21940.85	4.75	22.3034
1.541	27411.62	5.00	27.9043
1.618	33809.14	5.25	34.4686
1.695	41130.16	5.50	41.9985
1.771	47973.62	5.75	49.0672
1.848	52896.13	6.00	54.1949
1.925	54707.16	6.25	56.1508
2.002	53943.98	6.50	55.4707
2.078	51084.93	6.75	52.6324
2.155	47814.67	7.00	49.3619
2.231	44079.56	7.25	45.6005
2.308	41243.16	7.50	42.7579
2.384	39049.53	7.75	40.5736
2.461	37824.16	8.00	39.3904
2.537	37273.23	8.25	38.9083
2.614	37000.23	8.50	38.7172
2.690	37472.63	8.75	39.3096
2.766	37878.93	9.00	39.8380
2.842	38439.82	9.25	40.5346
2.918	37912.03	9.50	40.0864
2.994	36157.72	9.75	38.3377
3.070	32891.41	10.00	34.9737
3.146	29347.96	10.25	31.2969
3.222	25781.03	10.50	27.5751
3.298	22355.69	10.75	23.9844
3.374	19990.69	11.00	21.5140
3.450	18139.51	11.25	19.5839
3.525	16873.43	11.50	18.2763
3.601	16117.75	11.75	17.5157
3.676	15624.69	12.00	31.9671
3.827	15229.71	12.50	31.5703
3.978	15364.16	13.00	32.0099
4.128	15552.08	13.50	32.5617
4.278	15771.48	14.00	33.0573
4.427	15631.69	14.50	33.2405
4.576	15316.60	15.00	32.8386
4.725	14883.93	15.50	32.1814
4.874	14250.19	16.00	31.0794
5.022	13439.89	16.50	29.5741
5.170	12674.19	17.00	28.1447
5.317	11871.75	17.50	26.6099
5.464	11106.37	18.00	25.1331
5.610	10491.96	18.50	23.9752
5.757	9919.83	19.00	22.8942
5.902	9479.49	19.50	22.1006
6.047	9227.08	20.00	21.7350
6.192	9020.73	20.50	21.4728
6.337	8833.34	21.00	21.2517
6.480	8759.23	21.50	21.3022
6.624	8612.21	22.00	21.1751
6.766	8424.73	22.50	20.9449
6.909	8244.99	23.00	20.7289
7.051	8013.46	23.50	20.3760
7.192	7741.14	24.00	19.9096
7.332	7402.93	24.50	19.2600
7.473	7087.46	25.00	18.6540
7.612	6750.52	25.50	17.9753
7.751	6414.27	26.00	17.2809
7.890	6093.55	26.50	16.6105
8.027	5802.28	27.00	16.0034
8.164	5557.66	27.50	15.5100
8.301	5315.68	28.00	15.0099
8.437	5127.67	28.50	14.5497
8.572	4971.29	29.00	14.3696
8.707	4835.97	29.50	10.9526
8.841	4691.89	30.00	10.7427
8.974	4575.19	30.50	10.6135

D_2O at 4°C

S	DI	THETA	ERROR
9.107	4420.99	31.00	10.3631
9.239	4294.50	31.50	10.1797
9.370	4158.79	32.00	9.9672
9.500	4041.83	32.50	9.7197
9.630	3856.05	33.00	9.4421
9.759	3720.81	33.50	9.2064
9.887	3585.39	34.00	8.9620
10.015	3451.47	34.50	8.7132
10.142	3325.07	35.00	8.4753
10.268	3220.34	35.50	8.2852
10.393	3109.84	36.00	8.0732
10.517	3025.16	36.50	7.9216
10.641	2960.76	37.00	7.8175
10.764	2900.23	37.50	7.7164
10.886	2848.93	38.00	7.6388
11.007	2792.14	38.50	7.5397
11.127	2752.42	39.00	7.4818
11.247	2717.24	39.50	7.4318
11.366	2676.49	40.00	7.3621
11.483	2636.33	40.50	7.2894
11.600	2598.46	41.00	7.2185
11.716	2557.08	41.50	7.1332
11.831	2513.70	42.00	7.0377
11.946	2474.15	42.50	6.9485
12.059	2429.64	43.00	6.8409
12.171	2385.99	43.50	6.7313
12.283	2348.26	44.00	6.5343
12.393	2307.54	44.50	6.5249

S	DI	THETA	ERROR
12.503	2276.73	45.00	6.4396
12.611	2247.26	45.50	6.3544
12.719	2217.03	46.00	6.2636
12.826	2192.13	46.50	6.1843
12.932	2169.69	47.00	6.1089
13.036	2145.99	47.50	6.0269
13.140	2137.69	48.00	5.9850
13.243	2113.48	48.50	5.8957
13.345	2101.48	49.00	5.8379
13.445	2091.06	49.50	5.7818
13.545	2076.34	50.00	5.7113
13.644	2064.97	50.50	5.6435
13.838	2035.65	51.50	5.4995
14.028	2011.11	52.50	5.3538
14.214	1986.86	53.50	5.2027
14.395	1956.17	54.50	5.0328
14.572	1923.44	55.50	4.8557
14.744	1890.51	56.50	4.6779
14.913	1858.28	57.50	4.5022
15.076	1833.13	58.50	4.3453
15.235	1814.34	59.50	4.2063
15.389	1795.17	60.50	4.0663
15.539	1774.06	61.50	3.9260
15.684	1761.24	62.50	3.8073
15.824	1754.00	63.50	3.7035
15.959	1742.55	64.50	3.5942

NUMBER OF POINTS IS 124

D_2O at 4°C

DATA FOR H_2O at 4°C

GROUP 1

SECTION 1, RUN 1. 1/2 DEG. DIV.

NUMBER OF T IS 32

T	T	T	T	T	T	T	T	T	T
19.65	17.24	14.54	12.27	10.18	8.52	7.13	6.25	5.73	5.64
5.83	6.26	6.90	7.75	8.31	8.96	9.52	9.98	10.27	10.42
10.56	10.84	11.22	12.08	13.33	15.49	18.14	21.11	24.19	26.88
29.23	31.30								

GROUP 2

SECTION 1, RUN 2. 1/2 DEG. DIV.

NUMBER OF T IS 32

T	T	T	T	T	T	T	T	T	T
20.01	17.76	15.11	12.73	10.63	8.87	7.48	6.58	6.05	5.91
6.10	6.54	7.25	7.99	8.72	9.47	10.14	10.60	10.94	11.13
11.32	11.57	12.12	12.92	14.52	16.57	19.37	22.66	25.30	29.01
31.77	34.07								

GROUP 3

SECTION 2, RUNS 1 AND 2, 1/2 DEG. DIV.

NUMBER OF T IS 8

T	T	T	T	T	T	T	T	T	T
33.02	34.84	36.39	37.35	36.00	38.73	40.04	41.62		

GROUP 4

SECTION 3, RUN1, 2 DEG. DIV.

NUMBER OF T IS 35

T	T	T	T	T	T	T	T	T	T
9.75	10.01	10.27	10.46	10.60	10.98	11.28	12.05	12.33	13.89
15.14	16.48	18.04	19.58	21.13	22.57	23.73	24.98	25.33	26.83
28.03	29.19	30.56	32.58	34.33	36.72	39.23	42.44	45.31	48.98
52.63	56.05	59.40	62.64	65.17					

GROUP 5

SECTION 3, RUN 2. 2 DEG. DIV.

NUMBER OF T IS 35

T	T	T	T	T	T	T	T	T	T
9.53	9.60	9.72	9.83	10.00	10.32	10.73	11.41	12.51	13.05
14.27	15.61	17.11	18.53	20.05	21.47	22.54	23.67	24.62	25.64
26.64	27.61	29.11	30.69	32.62	34.36	37.16	39.75	43.29	45.63
49.55	52.79	56.04	59.19	62.42					

GROUP 6

SECTION 3, RUN 3. 2 DEG. DIV.

NUMBER OF T IS 35

T	T	T	T	T	T	T	T	T	T
9.73	10.12	10.29	10.46	10.62	10.91	11.34	12.14	12.81	13.84
15.09	16.43	17.93	19.46	20.89	22.39	23.54	24.90	25.67	26.88
27.76	28.98	30.33	32.14	34.12	36.33	38.85	41.95	45.10	48.53
52.11	55.77	59.01	61.90	65.74					

GROUP 7

SECTION 4, RUNS 1, 2, 3, 2 DEG. DIV.

NUMBER OF T IS 9

T	T	T	T	T	T	T	T	T	T
67.58	70.50	73.76	65.75	68.43	72.30	68.53	71.71	74.98	

GROUP 8

SECTION 5, RUN 1, 4 DEG. DIV.

NUMBER OF T IS 42

T	T	T	T	T	T	T	T	T	T
12.05	12.61	13.15	13.89	14.42	15.05	15.82	16.58	17.44	18.38
19.45	20.09	21.07	22.08	22.81	23.93	24.16	25.09	25.79	26.33
26.85	27.49	27.91	28.47	29.02	29.73	30.37	30.80	31.59	31.99
32.52	33.04	33.24	34.09	34.18	34.44	34.72	34.84	34.71	35.00
35.10	34.56								

GROUP 9

SECTION 5, RUN 2, 4 DEG. DIV.

NUMBER OF T IS 42

T	T	T	T	T	T	T	T	T	T
12.07	12.59	13.26	13.72	14.54	15.09	15.83	16.61	17.52	18.38
19.19	20.25	20.99	21.96	22.79	23.70	24.25	24.83	25.53	25.26
27.00	27.12	28.03	28.66	29.18	29.65	30.27	30.84	31.46	31.83
32.51	32.91	33.57	34.01	34.19	34.19	34.72	34.73	34.56	34.91
34.87	34.89								

GROUP 10

SECTION 5, RUN 3, 4 DEG. DIV.

NUMBER OF T IS 42

T	T	T	T	T	T	T	T	T	T
23.93	24.99	26.12	27.13	28.57	29.89	31.38	32.79	34.74	36.57
37.93	40.26	42.17	43.89	45.24	46.94	48.18	49.79	50.72	52.02
52.93	53.88	54.93	56.05	57.08	58.37	59.37	60.78	61.99	63.43
64.52	65.39	66.60	67.52	68.05	68.70	69.05	69.25	69.43	69.71
69.50	69.31								

GROUP 11

SECTION 5, RUN 4, 4 DEG. DIV.

NUMBER OF T IS 42

T	T	T	T	T	T	T	T	T	T
12.01	12.53	13.02	13.65	14.26	14.85	15.73	16.47	17.36	18.40
19.08	19.99	21.07	21.82	22.52	23.37	24.09	24.92	25.41	25.96
26.41	27.08	27.67	28.29	28.76	29.48	30.02	30.40	31.13	31.87
32.19	32.94	32.93	33.45	33.90	34.03	34.38	34.64	34.35	34.67
34.64	34.51								

GROUP 12

SECTION 5, RUN 5, 4 DEG. DIV.

NUMBER OF T IS 42

T	T	T	T	T	T	T	T	T	T
12.03	12.57	13.15	13.74	14.34	15.04	15.75	16.47	17.37	18.25
19.18	20.24	21.11	21.93	22.63	23.45	24.27	24.96	25.36	26.13
26.62	27.14	27.76	28.34	28.87	29.57	30.07	30.67	31.16	31.80
32.25	32.61	33.15	33.34	34.22	34.14	34.35	34.50	34.52	34.83
34.57	34.62								

H_2O at 4°C

GROUP 13

SECTION 5, RUN 6, 4 DEG. DIV.

NUMBER OF T IS 42

T	T	T	T	T	T	T	T	T	T
11.91	12.42	12.94	13.54	14.13	14.81	15.56	16.37	17.24	18.07
18.94	19.93	20.85	21.59	22.54	23.16	24.19	24.32	25.23	25.01
26.29	26.79	27.49	28.09	28.59	28.97	29.82	30.25	30.82	31.16
32.26	32.42	32.70	33.20	33.70	33.77	33.79	33.81	34.13	34.44
34.32	34.35								

GROUP 14

SECTION 5, RUN 7, 4 DEG. DIV.

NUMBER OF T IS 42

T	T	T	T	T	T	T	T	T	T
12.15	12.71	13.19	13.77	14.67	15.22	16.06	16.81	17.36	18.60
19.41	20.45	21.25	22.15	23.03	23.80	24.58	25.27	26.15	26.52
27.29	27.73	28.38	29.01	29.91	30.09	30.68	31.50	31.90	32.63
32.82	33.47	33.95	34.22	34.85	34.74	35.06	35.46	35.17	35.29
35.34	35.43								

GROUP 15

SECTION 5, RUN 8, 4 DEG. DIV.

NUMBER OF T IS 42

T	T	T	T	T	T	T	T	T	T
11.92	12.43	12.99	13.38	14.20	14.83	15.52	16.52	17.20	18.15
18.87	19.97	20.90	21.90	22.46	23.39	23.97	24.75	25.44	25.85
26.26	27.03	27.44	27.88	28.67	29.55	29.66	30.53	31.05	31.68
32.49	32.52	32.97	33.39	34.05	34.27	34.42	34.53	34.32	34.45
34.92	34.39								

GROUP 16

SECTION 6, RUNS 1-8, 4 DEG. DIV.

NUMBER OF T IS 24

T	T	T	T	T	T	T	T	T	T
34.88	34.61	34.67	34.49	34.56	34.46	59.57	68.21	68.71	34.34
34.53	34.19	34.59	34.56	34.31	34.06	33.90	33.87	35.30	35.32
35.13	34.26	34.41	34.23						

GROUP 17

SECTION 7, RUN 1, 4 DEG. DIV.

NUMBER OF T IS 15

T	T	T	T	T	T	T	T	T	T
68.86	68.45	68.34	67.79	67.12	66.76	66.35	65.22	64.02	62.90
61.43	60.35	58.37	57.27	55.74					

GROUP 18

SECTION 7, RUN 2, 4 DEG. DIV.

NUMBER OF T IS 15

T	T	T	T	T	T	T	T	T	T
68.20	68.62	68.12	68.03	67.79	67.45	66.64	65.66	64.35	63.25
62.00	60.76	59.53	57.69	56.15					

GROUP 19

SECTION 7, ROW 3, 4 DEG. DIV.

NUMBER OF T IS 15

69.71	69.25	68.26	69.15	68.60	67.66	67.23	66.43	65.29	64.03
62.75	61.65	60.76	58.27	56.73					

GROUP 20

SECTION 7, ROW 4, 4 DEG. DIV.

NUMBER OF T IS 15

68.12	68.02	67.74	67.50	67.00	66.42	65.92	65.33	63.91	63.27
61.76	60.50	56.32	57.68	56.28					

GROUP 21

SECTION 7, ROW 5, 4 DEG. DIV.

NUMBER OF T IS 15

69.59	69.10	68.28	68.80	68.32	67.87	67.01	66.30	64.34	64.13
62.67	61.52	59.72	58.69	56.74					

SUMMARY OF DATA AND CORRECTIONS BEFORE NORMALIZATION

SECTION 1

NUMBER OF RINGS IS 2

NUMBER OF THETAS IS 32

DELTA THETA .250

THETA MIN 4.000

THETA MAX 11.750

NUMBER OF COUNTS IS 100000.00

BACKGROUND 3.61

CORRECTED FOR POLARIZATION

FACTOR FOR DEHETEATION CORRECTION(2*ALPHA*MU) IS .35538

SECTION 2

NUMBER OF RINGS IS 2

NUMBER OF THETAS IS 4

DELTA THETA .800

THETA MIN 12.000

THETA MAX 13.500

NUMBER OF COUNTS IS 100000.00

H_2O at 4°C

BACKGROUND 5.61

CORRECTED FOR POLARIZATION

FACTOR FOR PENETRATION CORRECTION(2*ALPHA*MU) IS .35538

SECTION 3

NUMBER OF RUNS IS 3

NUMBER OF THETAS IS 35

DELTA THETA .500

THETA MIN 19.000

THETA MAX 29.000

NUMBER OF COUNTS IS 300000.00

BACKGROUND 7.28

CORRECTED FOR POLARIZATION

FACTOR FOR PENETRATION CORRECTION(2*ALPHA*MU) IS 1.42150

SECTION 4

NUMBER OF RUNS IS 3

NUMBER OF THETAS IS 3

DELTA THETA .500

THETA MIN 29.500

THETA MAX 30.500

NUMBER OF COUNTS IS 300000.00

BACKGROUND 7.28

CORRECTED FOR POLARIZATION

FACTOR FOR PENETRATION CORRECTION(2*ALPHA*MU) IS 1.42150

SECTION 5

NUMBER OF RUNS IS 8

NUMBER OF THETAS IS 42

DELTA THETA .500

THETA MIN 29.500

THETA MAX 50.000

NUMBER OF COUNTS IS 450000.00

BACKGROUND 7.78

CORRECTED FOR POLARIZATION

FACTOR FOR PENETRATION CORRECTION(2*ALPHA*MU) IS 2.84301

SECTION 6

NUMBER OF RUNS IS 8

NUMBER OF THETAS IS 3

```
DELTA THETA  1.000
THETA MIN 50.500
THETA MAX 52.500
NUMBER OF COUNTS IS  450000.00
BACKGROUND  7.78
CORRECTED FOR POLARIZATION
FACTOR FOR PENETRATION CORRECTION(2*ALPHA*MU) IS    2.84301
                    SECTION    7
NUMBER OF RINS IS    5
NUMBER OF THETAS IS   15
DELTA THETA  1.000
THETA MIN 50.500
THETA MAX 64.500
NUMBER OF COUNTS IS  600000.00
BACKGROUND  7.78
CORRECTED FOR POLARIZATION
FACTOR FOR PENETRATION CORRECTION(2*ALPHA*MU) IS    2.84301


                    NORMALIZATION
NUMBER OF SECTIONS NORMALIZED TO SUCCEEDING SECTIONS IS    1
NUMBER OF SECTIONS REQUIRING NO NORMALIZATION IS    1
NUMBER OF SECTIONS NORMALIZED TO PRECEDING SECTIONS IS    2
        NORMALIZATION TO SUCCEEDING SECTIONS
                    SECTION    1
NUMBER OF THETAS IS   34
NUMBER OF OVERLAP POINTS WITH FOLLOWING SECTION    4
NUMBER OF OVERLAP POINTS WITH PRECEDING SECTION IS    0
R IS    3.34278
        SECTIONS WITH NO NORMALIZATION
                    SECTION    1
NUMBER OF THETAS IS   34
NUMBER OF OVERLAP POINTS WITH FOLLOWING SECTION    3
NUMBER OF OVERLAP POINTS WITH PRECEDING SECTION IS    4
```

NORMALIZATION TO PRECEDING SECTIONS

SECTION 1

NUMBER OF THETAS IS 45

NUMBER OF OVERLAP POINTS WITH FOLLOWING SECTION 3

NUMBER OF OVERLAP POINTS WITH PRECEDING SECTION IS 3

R IS .49365

SECTION 2

NUMBER OF THETAS IS 15

NUMBER OF OVERLAP POINTS WITH FOLLOWING SECTION 0

NUMBER OF OVERLAP POINTS WITH PRECEDING SECTION IS 3

R IS .49166

S	DI	THETA	ERROR
1.233	13081.29	4.00	45.7412
1.310	16188.62	4.25	15.7885
1.387	19659.95	4.50	19.1986
1.464	23978.78	4.75	23.4460
1.541	29606.03	5.00	28.9920
1.618	36395.80	5.25	35.6955
1.695	44485.27	5.50	43.6969
1.771	51991.22	5.75	51.1539
1.848	58089.48	6.00	57.2523
1.925	60749.73	6.25	59.9814
2.002	60280.38	6.50	59.6289
2.078	57558.65	6.75	57.0468
2.155	53319.63	7.00	52.9515
2.231	49067.21	7.25	48.8297
2.308	46406.80	7.50	46.2814
2.384	43864.54	7.75	43.8431
2.461	42048.47	8.00	42.1244
2.537	41062.90	8.25	41.2340
2.614	40717.40	8.50	40.9864
2.690	40942.13	8.75	41.3157
2.766	41184.73	9.00	41.6674

S	DI	THETA	ERROR
2.842	41055.90	9.25	41.6467
2.918	40236.29	9.50	40.9259
2.994	38330.41	9.75	39.0957
3.070	35097.74	10.00	35.9004
3.146	31089.76	10.25	31.8935
3.222	27087.73	10.50	27.8700
3.298	23656.92	10.75	24.4151
3.374	21104.12	11.00	21.8484
3.450	19228.36	11.25	19.9699
3.525	17943.11	11.50	18.6957
3.601	17050.10	11.75	17.8242
3.676	16325.78	12.00	33.2086
3.827	15981.12	12.50	32.9653
3.978	15974.03	13.00	33.2824
4.128	16023.89	13.50	33.6902
4.278	16179.82	14.00	34.1333
4.427	16008.40	14.50	34.0415
4.576	15783.19	15.00	33.8390
4.725	15093.76	15.50	32.8351
4.874	14378.68	16.00	31.3597
5.022	13732.21	16.50	30.2174

H_2O at 4°C

S	DI	THETA	ERROR
5.170	12846.79	17.00	28.5280
5.317	12028.15	17.50	26.9605
5.464	11223.94	18.00	25.3991
5.610	10578.78	18.50	24.1734
5.757	10001.98	19.00	23.0838
5.902	9539.64	19.50	22.2409
6.047	9266.17	20.00	21.8271
6.192	8977.01	20.50	21.3687
6.337	8853.18	21.00	21.2995
6.480	8667.82	21.50	21.0794
6.624	8514.85	22.00	20.9357
6.766	8349.34	22.50	20.7574
6.909	8114.43	23.00	20.4016
7.051	7819.90	23.50	19.8839
7.192	7523.51	24.00	19.3498
7.332	7220.17	24.50	18.7845
7.473	6862.17	25.00	18.0611
7.612	6494.53	25.50	17.2937
7.751	6146.73	26.00	16.5601
7.890	5810.58	26.50	15.8391
8.027	5531.12	27.00	15.2556
8.164	5281.41	27.50	14.7391
8.301	5075.73	28.00	14.3324
8.437	4907.44	28.50	14.0208
8.572	4747.75	29.00	13.7234
8.707	4629.30	29.50	11.0589
8.841	4508.02	30.00	10.8778
8.974	4378.10	30.50	10.6972
9.107	4252.91	31.00	10.5320
9.239	4113.05	31.50	10.2770
9.370	3996.79	32.00	10.0971
9.500	3855.93	32.50	9.8473
9.630	3725.10	33.00	9.6149
9.759	3581.42	33.50	9.3408
9.887	3447.70	34.00	9.0840

S	DI	THETA	ERROR
10.015	3343.73	34.50	8.8978
10.142	3213.54	35.00	8.6341
10.268	3109.56	35.50	8.4329
10.393	3018.66	36.00	8.2604
10.517	2950.78	36.50	8.1448
10.641	2872.31	37.00	7.9942
10.764	2821.07	37.50	7.9138
10.886	2767.74	38.00	7.8226
11.007	2722.46	38.50	7.7492
11.127	2680.92	39.00	7.6816
11.247	2649.41	39.50	7.6309
11.366	2617.63	40.00	7.5897
11.483	2577.66	40.50	7.5127
11.600	2539.67	41.00	7.4368
11.716	2500.41	41.50	7.3524
11.831	2460.38	42.00	7.2625
11.946	2425.66	42.50	7.1808
12.059	2384.36	43.00	7.0765
12.171	2343.77	43.50	6.9699
12.283	2306.73	44.00	6.8694
12.393	2266.36	44.50	6.7551
12.503	2238.29	45.00	6.6733
12.611	2208.86	45.50	6.5837
12.719	2176.50	46.00	6.4817
12.826	2144.85	46.50	6.3783
12.932	2131.71	47.00	6.3267
13.036	2109.90	47.50	6.2460
13.140	2093.33	48.00	6.1778
13.243	2088.54	48.50	6.1354
13.345	2063.20	49.00	6.0416
13.445	2051.65	49.50	5.9796
13.545	2046.53	50.00	5.9337
13.644	2036.01	50.50	5.5723
13.838	2012.30	51.50	5.4315
14.028	1980.17	52.50	5.2686

H_2O at 4°C

S	DI	THETA	ERROR
14.214	1948.66	53.50	5.1027
14.395	1919.37	54.50	4.9381
14.572	1889.55	55.50	4.7701
14.744	1858.72	56.50	4.5990
14.913	1832.60	57.50	4.4399
15.076	1817.90	58.50	4.3092
15.235	1792.39	59.50	4.1542

S	DI	THETA	ERROR
15.389	1778.21	60.50	4.0279
15.539	1754.51	61.50	3.8872
15.684	1748.93	62.50	3.7807
15.824	1738.28	63.50	3.6640
15.959	1727.52	64.50	3.5632

NUMBER OF POINTS IS 124

H_2O at 4°C

DATA FOR H_2O at 25°C

GROUP 1

SECTION 1, RUN 1, 1/12 DEGREE DIV., .006 REC.

NUMBER OF T IS 16

T	T	T	T	T	T	T	T	T	T
1.55	3.24	5.60	9.20	15.15	25.10	42.17	72.00	125.50	223.50
411.00	760.50	1256.00	1944.50	2491.67	2888.33				

GROUP 2

SECTION 2, RUN 1, 1/6 DEGREE DIV., .006 REC.

NUMBER OF T IS 17

T	T	T	T	T	T	T	T	T	T
5.44	6.72	8.17	9.26	9.80	9.87	10.13	10.07	10.29	10.56
10.73	11.10	11.49	11.94	12.26	13.00	13.76			

GROUP 3

SECTION 2, RUN 2, 1/6 DEGREE DIV., .006 REC.

NUMBER OF T IS 17

T	T	T	T	T	T	T	T	T	T
7.37	8.87	9.23	9.38	9.23	9.18	9.15	9.31	9.91	10.19
10.36	11.10	11.79	12.25	12.98	13.60	14.63			

GROUP 4

SECTION 3, RUNS 1 AND 2, 1/6 DEGREE DIV., .006 REC.

NUMBER OF T IS 8

T	T	T	T	T	T	T	T	T	T
14.59	16.73	18.52	20.36	15.11	17.44	19.20	20.59		

GROUP 5

SECTION 4, RUN 1, 1/2 DEGREE DIV., .006 REC.

NUMBER OF T IS 34

T	T	T	T	T	T	T	T	T	T
9.61	9.71	9.85	10.16	10.20	10.36	10.46	10.63	10.52	10.52
10.59	10.60	10.69	10.76	10.59	10.47	10.59	10.73	10.65	10.51
10.28	10.30	10.06	9.84	9.56	9.46	9.17	9.01	8.70	8.47
8.12	8.02	7.53	7.22						

GROUP 6

SECTION 4, RUN 2, 1/2 DEGREE DIV., .006 REC.

NUMBER OF T IS 34

T	T	T	T	T	T	T	T	T	T
9.26	9.60	9.85	10.06	10.16	10.42	10.47	10.59	10.55	10.83
10.81	10.90	10.90	10.98	10.98	11.05	11.07	10.89	10.88	10.71
10.82	10.62	10.40	10.34	10.18	10.09	9.70	9.58	9.43	9.04
8.74	8.57	8.07	7.53						

GROUP 7

SECTION 4, RUN 3, 1/2 DEGREE DIV., .006 REC.

NUMBER OF T IS 34

T	T	T	T	T	T	T	T	T	T
9.11	9.46	9.73	10.16	10.18	10.33	10.42	10.56	10.57	10.54
10.55	10.61	10.47	10.52	10.66	10.57	10.48	10.47	10.45	10.31
10.28	10.17	9.95	9.80	9.56	9.33	9.20	9.00	8.80	8.63
8.41	7.95	7.77	7.53						

GROUP 8

SECTION 5, RUNS 1,2, AND 3, 1/2 DEGREE DIV., .006 REC.

NUMBER OF T IS 12

T	T	T	T	T	T	T	T	T	T
6.91	5.94	5.14	4.32	7.32	6.34	5.49	4.69	7.25	6.47
5.44	4.63								

GROUP 9

SECTION 6, RUN 1, 1/2 DEGREE DIV., .006 REC.

NUMBER OF T IS 24

T	T	T	T	T	T	T	T	T	T
13.07	11.54	10.16	8.55	7.25	6.14	5.27	4.62	4.26	4.11
4.15	4.41	4.78	5.24	5.72	6.12	6.54	7.01	7.25	7.51
7.74	8.03	8.60	9.43						

GROUP 10

SECTION 6, RUN 2, 1/2 DEGREE DIV., .006 REC.

NUMBER OF T IS 24

T	T	T	T	T	T	T	T	T	T
13.19	11.69	10.03	8.57	7.25	6.19	5.25	4.64	4.21	4.12
4.11	4.39	4.73	5.23	5.71	6.25	6.75	6.99	7.20	7.46
7.72	8.04	8.62	9.48						

GROUP 11

SECTION 7, RUNS 1 AND 2, 1/2 DEGREE DIV., .006 REC.

NUMBER OF T IS 8

T	T	T	T	T	T	T	T	T	T
10.49	13.95	18.33	22.35	10.45	14.05	18.50	22.79		

GROUP 12

SECTION 8, RUN 1, 2 DEGREE DIV., .006 REC.

NUMBER OF T IS 33

T	T	T	T	T	T	T	T	T	T
3.58	4.66	5.91	6.90	7.55	7.90	8.15	8.27	8.50	8.84
9.42	10.03	10.88	12.01	13.26	14.79	16.37	18.20	19.92	21.73
23.01	24.45	25.68	27.05	28.67	29.77	31.41	33.49	36.10	38.51
41.60	45.39	49.08							

GROUP 13

SECTION 8, RUN 2, 2 DEGREE DIV., .006 REC.

NUMBER OF T IS 33

T	T	T	T	T	T	T	T	T	T
3.07	4.03	5.09	5.94	6.48	6.89	7.06	7.22	7.36	7.64
8.14	8.64	9.37	10.26	11.48	12.73	14.02	15.66	17.20	18.56
19.87	20.91	22.01	23.02	24.07	25.25	26.78	28.34	30.35	32.64
35.25	38.02	41.51							

GROUP 14

SECTION 9, RUN 1, 4 DEGREE DIV., .006 REC

NUMBER OF T IS 26

T	T	T	T	T	T	T	T	T	T
4.76	5.23	5.68	5.92	6.29	6.82	7.15	7.48	7.80	8.15
8.41	8.76	9.13	9.48	9.99	10.34	10.86	11.31	11.90	12.20
12.88	13.22	13.70	14.24	14.66	14.99				

GROUP 15

SECTION 9, RUN 2, 4 DEGREE DIV., .006 REC.

NUMBER OF T IS 26

T	T	T	T	T	T	T	T	T	T
4.77	5.12	5.51	5.98	6.33	6.70	7.07	7.42	7.77	8.12
8.52	8.76	9.10	9.49	9.86	10.25	10.83	11.21	11.72	12.31
12.84	13.31	13.59	14.19	14.67	14.96				

GROUP 16

SECTION 9, RUN 3, 4 DEGREE DIV., .006 REC.

NUMBER OF T IS 26

T	T	T	T	T	T	T	T	T	T
4.79	5.12	5.52	5.96	6.24	6.73	7.15	7.39	7.98	8.02
8.39	8.63	9.09	9.57	9.85	10.37	10.72	11.29	11.59	12.30
12.65	13.38	13.73	14.29	14.64	15.01				

GROUP 17

SECTION 9, RUN 4, 4 DEGREE DIV., .006 REC.

NUMBER OF T IS 26

T	T	T	T	T	T	T	T	T	T
9.44	10.08	10.94	11.55	12.38	13.03	13.91	14.57	15.14	15.75
16.45	17.25	17.99	18.60	19.35	20.22	20.91	22.07	23.18	24.17
25.37	26.42	27.27	28.27	28.64	29.64				

GROUP 18

SECTION 9, RUN 5, 4 DEGREE DIV., .006 REC.

NUMBER OF T IS 26

T	T	T	T	T	T	T	T	T	T
11.68	12.59	13.50	14.54	15.65	16.58	17.54	18.28	19.14	19.86
20.83	21.47	22.34	23.28	24.22	25.30	26.68	27.64	29.31	30.62
31.62	33.26	34.09	35.49	36.10	37.56				

GROUP 19

SECTION 9, RUN 6, 4 DEGREE DIV., .006 REC.

NUMBER OF T IS 26

T	T	T	T	T	T	T	T	T	T
11.85	12.76	13.62	14.64	15.56	16.67	17.54	18.31	19.21	20.00
20.88	21.65	22.37	23.33	24.39	25.73	26.45	27.80	29.08	30.69
31.75	32.85	34.32	35.77	36.81	37.57				

GROUP 20

SECTION 10, RUN 1, 4 DEGREE DIV., .006 REC.

NUMBER OF T IS 25

T	T	T	T	T	T	T	T	T	T
27.15	28.04	28.95	30.20	30.49	31.40	32.00	32.55	33.27	34.02
34.12	35.13	35.53	36.27	37.65	37.91	38.76	39.06	39.93	39.96
40.56	40.71	41.31	41.60	41.96					

GROUP 21

SECTION 10, RUN 2, 4 DEGREE DIV., .006 REC.

NUMBER OF T IS 25

T	T	T	T	T	T	T	T	T	T
13.73	14.29	14.64	15.01	15.39	15.62	15.86	16.20	16.36	16.83
16.85	17.15	17.56	17.83	18.22	18.76	18.99	19.21	19.55	19.70
19.74	20.28	20.27	20.58	20.49					

GROUP 22

SECTION 10, RUN 3, 4 DEGREE DIV., .006 REC.

NUMBER OF T IS 25

T	T	T	T	T	T	T	T	T	T
27.27	28.27	28.64	29.64	30.48	31.16	31.93	32.44	33.00	33.32
34.08	34.72	35.18	36.03	36.39	37.48	37.59	38.49	38.92	39.62
39.69	40.41	40.98	40.77	41.00					

GROUP 23

SECTION 10, RUN 4, 4 DEGREE DIV., .006 REC.

NUMBER OF T IS 25

T	T	T	T	T	T	T	T	T	T
33.85	34.93	36.05	37.01	37.92	38.62	39.81	40.37	41.05	41.83
42.51	43.10	44.08	45.05	46.06	46.34	47.36	48.39	48.91	49.20
50.20	50.61	50.84	51.09	51.69					

GROUP 24

SECTION 10, RUN 5, 4 DEGREE DIV., .006 REC.

NUMBER OF T IS 25

T	T	T	T	T	T	T	T	T	T
33.80	35.22	36.15	36.96	37.80	38.66	40.04	40.47	41.40	41.83
42.83	43.80	44.56	45.15	46.28	46.95	47.95	48.56	49.66	49.94
50.33	50.69	51.25	51.23	51.41					

GROUP 25

SECTION 10, RUN 6, 4 DEGREE DIV., .006 REC.

NUMBER OF T IS 25

T	T	T	T	T	T	T	T	T	T
33.64	34.34	35.87	36.58	37.79	38.45	39.34	40.15	41.01	41.47
42.46	43.34	43.82	45.00	45.93	46.57	47.33	48.37	49.06	49.71
49.93	50.71	50.84	51.91	51.24					

GROUP 26

SECTION 11, RUNS 1-6, 4 DEGREE DIV., .006 REC)

NUMBER OF T IS 18

T	T	T	T	T	T	T	T	T	T
20.29	20.85	20.72	41.04	41.33	41.45	52.10	52.24	51.98	51.62
52.19	51.64	51.39	51.39	51.23	41.78	41.52	41.72		

GROUP 27

SECTION 12, RUN 1, 4 DEGREE DIV., .006 REC.

NUMBER OF T IS 17

T	T	T	T	T	T	T	T	T	T
49.66	49.85	50.11	49.57	49.98	49.30	48.30	48.70	48.03	47.34
46.67	45.46	44.69	43.40	42.59	41.36	39.91			

GROUP 28

SECTION 12, RUN 2, 4 DEGREE DIV., .006 REC.

NUMBER OF T IS 17

T	T	T	T	T	T	T	T	T	T
99.65	100.42	101.02	100.60	100.31	99.77	98.67	98.42	97.22	96.05
94.78	92.44	89.78	87.85	86.26	83.47	80.83			

GROUP 29

SECTION 12, RUN 3, 4 DEGREE DIV., .006 REC.

NUMBER OF T IS 17

T	T	T	T	T	T	T	T	T	T
99.51	100.25	100.65	100.55	99.84	98.90	98.48	97.77	96.83	95.40
93.56	91.92	90.22	87.93	85.50	83.27	81.03			

GROUP 30

SECTION 12, RUN 4, 4 DEGREE DIV., .006 REC.

NUMBER OF T IS 17

T	T	T	T	T	T	T	T	T	T
99.12	99.85	99.96	99.03	99.84	98.88	98.43	97.02	96.01	95.09
93.34	91.61	90.22	88.09	85.24	83.46	80.74			

GROUP 31

SECTION 12, RUN 5, 4 DEGREE DIV., .006 REC.

NUMBER OF T IS 17

T	T	T	T	T	T	T	T	T	T
100.23	100.08	100.86	100.56	99.76	100.00	99.18	97.81	97.87	96.29
95.60	93.13	90.86	89.13	86.45	84.43	81.75			

```
SUMMARY OF DATA AND CORRECTIONS BEFORE NORMALIZATION
                SECTION    1
NUMBER OF RUNS IS   1
NUMBER OF THETAS IS  16
DELTA THETA   .033
THETA MIN   .167
THETA MAX   .667
NUMBER OF COUNTS IS  500000.00
BACKGROUND  1.00
CORRECTED FOR POLARIZATION
FACTOR FOR PENETRATION CORRECTION(2*ALPHA*MU) IS      .05905
                SECTION    2
NUMBER OF RUNS IS   2
NUMBER OF THETAS IS  17
DELTA THETA   .033
THETA MIN   .600
THETA MAX  1.133
NUMBER OF COUNTS IS   10000.00
BACKGROUND  1.00
CORRECTED FOR POLARIZATION
FACTOR FOR PENETRATION CORRECTION(2*ALPHA*MU) IS      .11810
                SECTION    3
NUMBER OF RUNS IS   2
NUMBER OF THETAS IS   4
DELTA THETA   .083
THETA MIN  1.167
THETA MAX  1.417
NUMBER OF COUNTS IS   10000.00
BACKGROUND  1.00
CORRECTED FOR POLARIZATION
FACTOR FOR PENETRATION CORRECTION(2*ALPHA*MU) IS      .11810
                SECTION    4
NUMBER OF RUNS IS   3
NUMBER OF THETAS IS  34
DELTA THETA   .083
THETA MIN  1.167
```

```
THETA MAX  3.917
NUMBER OF COUNTS IS   60000.00
BACKGROUND  1.00
CORRECTED FOR POLARIZATION
FACTOR FOR PENETRATION CORRECTION(2*ALPHA*MU) IS      .35431
                SECTION    5
NUMBER OF RUNS IS   3
NUMBER OF THETAS IS   4
DELTA THETA   .250
THETA MIN  4.000
THETA MAX  4.750
NUMBER OF COUNTS IS   60000.00
BACKGROUND  1.00
CORRECTED FOR POLARIZATION
FACTOR FOR PENETRATION CORRECTION(2*ALPHA*MU) IS      .35431
                SECTION    6
NUMBER OF RUNS IS   2
NUMBER OF THETAS IS  24
DELTA THETA   .250
THETA MIN  4.000
THETA MAX  9.750
NUMBER OF COUNTS IS   80000.00
BACKGROUND  1.00
CORRECTED FOR POLARIZATION
FACTOR FOR PENETRATION CORRECTION(2*ALPHA*MU) IS      .35431
                SECTION    7
NUMBER OF RUNS IS   2
NUMBER OF THETAS IS   4
DELTA THETA   .500
THETA MIN 10.000
THETA MAX 11.500
NUMBER OF COUNTS IS   80000.00
BACKGROUND  1.00
CORRECTED FOR POLARIZATION
FACTOR FOR PENETRATION CORRECTION(2*ALPHA*MU) IS      .35431
```

```
                SECTION     8
NUMBER OF RUNS IS    2
NUMBER OF THETAS IS  33
DELTA THETA    .500
THETA MIN 10.000
THETA MAX 26.000
NUMBER OF COUNTS IS  150000.00
BACKGROUND  1.00
CORRECTED FOR POLARIZATION
FACTOR FOR PENETRATION CORRECTION(2*ALPHA*MU) IS     1.41724
                SECTION     9
NUMBER OF RUNS IS    6
NUMBER OF THETAS IS  26
DELTA THETA    .500
THETA MIN 25.000
THETA MAX 37.500
NUMBER OF COUNTS IS  200000.00
BACKGROUND  1.00
CORRECTED FOR POLARIZATION
FACTOR FOR PENETRATION CORRECTION(2*ALPHA*MU) IS     2.83448
                SECTION    10
NUMBER OF RUNS IS    6
NUMBER OF THETAS IS  25
DELTA THETA    .500
THETA MIN 36.000
THETA MAX 48.000
NUMBER OF COUNTS IS  250000.00
BACKGROUND  1.00
CORRECTED FOR POLARIZATION
FACTOR FOR PENETRATION CORRECTION(2*ALPHA*MU) IS     2.83448
                SECTION    11
NUMBER OF RUNS IS    6
NUMBER OF THETAS IS   3
DELTA THETA  1.000
THETA MIN 48.500
THETA MAX 50.500
```

H_2O at 25°C

```
NUMBER OF COUNTS IS  250000.00
BACKGROUND  1.00
CORRECTED FOR POLARIZATION
FACTOR FOR PENETRATION CORRECTION(2*ALPHA*MU) IS    2.83448
              SECTION   12
NUMBER OF RUNS IS   5
NUMBER OF THETAS IS  17
DELTA THETA  1.000
THETA MIN 48.500
THETA MAX 64.500
NUMBER OF COUNTS IS  450000.00
BACKGROUND  1.00
CORRECTED FOR POLARIZATION
FACTOR FOR PENETRATION CORRECTION(2*ALPHA*MU) IS    2.83448


                    NORMALIZATION
NUMBER OF SECTIONS NORMALIZED TO SUCCEEDING SECTIONS IS   4
NUMBER OF SECTIONS REQUIRING NO NORMALIZATION IS    1
NUMBER OF SECTIONS NORMALIZED TO PRECEDING SECTIONS IS    3
        NORMALIZATION TO SUCCEEDING SECTIONS
              SECTION    1
NUMBER OF THETAS IS   16
NUMBER OF OVERLAP POINTS WITH FOLLOWING SECTION    3
NUMBER OF OVERLAP POINTS WITH PRECEDING SECTION IS    0
R IS    2.55770
              SECTION    2
NUMBER OF THETAS IS   21
NUMBER OF OVERLAP POINTS WITH FOLLOWING SECTION    4
NUMBER OF OVERLAP POINTS WITH PRECEDING SECTION IS    3
R IS    5.42733
              SECTION    3
NUMBER OF THETAS IS   38
NUMBER OF OVERLAP POINTS WITH FOLLOWING SECTION    4
NUMBER OF OVERLAP POINTS WITH PRECEDING SECTION IS    4
R IS    1.07262
```

H_2O at 25°C

```
                SECTION     4
NUMBER OF THETAS IS    28
NUMBER OF OVERLAP POINTS WITH FOLLOWING SECTION     4
NUMBER OF OVERLAP POINTS WITH PRECEDING SECTION IS     4
R IS     2.98338
        SECTIONS WITH NO NORMALIZATION
                SECTION     1
NUMBER OF THETAS IS    33
NUMBER OF OVERLAP POINTS WITH FOLLOWING SECTION     3
NUMBER OF OVERLAP POINTS WITH PRECEDING SECTION IS     4
        NORMALIZATION TO PRECEDING SECTIONS
                SECTION     1
NUMBER OF THETAS IS    26
NUMBER OF OVERLAP POINTS WITH FOLLOWING SECTION     4
NUMBER OF OVERLAP POINTS WITH PRECEDING SECTION IS     3
R IS      .62063
                SECTION     2
NUMBER OF THETAS IS    28
NUMBER OF OVERLAP POINTS WITH FOLLOWING SECTION     3
NUMBER OF OVERLAP POINTS WITH PRECEDING SECTION IS     4
R IS      .61412
                SECTION     3
NUMBER OF THETAS IS    17
NUMBER OF OVERLAP POINTS WITH FOLLOWING SECTION     0
NUMBER OF OVERLAP POINTS WITH PRECEDING SECTION IS     3
R IS      .59367
```

S	DI	THETA	ERROR
.051	16408312.10	.17	23953.7936
.062	8024894.87	.20	263.7321
.072	4748707.39	.23	156.0640
.082	2957498.53	.27	97.1977
.093	1838180.76	.30	60.4122
.103	1135844.83	.33	37.3302
.113	692221.92	.37	22.7506
.123	415142.30	.40	13.6443
.134	243864.67	.43	8.0151
.144	140189.12	.47	4.6077
.154	78022.84	.50	2.5645
.165	43134.53	.53	1.4178
.175	26704.30	.57	.8778
.185	17303.01	.60	10.0947
.195	14084.43	.63	8.3904
.206	12591.70	.67	7.6055
.216	12082.41	.70	7.1834
.226	11975.50	.73	7.1200
.237	12105.86	.77	7.1977
.247	12104.25	.80	7.1970
.257	12185.74	.83	7.2457
.267	11829.90	.87	7.0343
.278	11653.25	.90	6.9295
.288	11601.68	.93	6.8991
.298	11151.45	.97	6.6316
.309	10759.06	1.00	6.3985
.319	10475.74	1.03	6.2303
.329	10157.09	1.07	6.0410
.339	9749.44	1.10	5.7988
.350	9239.67	1.13	5.4958
.360	8469.55	1.17	10.5512
.386	7922.88	1.25	10.3596
.411	7597.55	1.33	10.2250
.437	7314.14	1.42	10.0017
.463	7619.15	1.50	10.0471
.489	7552.48	1.58	9.9607
.514	7568.27	1.67	9.9831
.540	7539.61	1.75	9.9470
.566	7648.24	1.83	10.0921
.591	7664.02	1.92	10.1148
.617	7726.31	2.00	10.1989
.643	7765.12	2.08	10.2522
.668	7855.69	2.17	10.3740
.694	7885.90	2.25	10.4161
.720	7973.18	2.33	10.5338
.746	8089.17	2.42	10.6895
.771	8158.51	2.50	10.7837
.797	8254.12	2.58	10.9128
.823	8366.53	2.67	11.0643
.848	8571.99	2.75	11.3390
.874	8700.16	2.83	11.5117
.900	8870.10	2.92	11.7399
.925	9160.01	3.00	12.1271
.951	9384.95	3.08	12.4286
.977	9699.25	3.17	12.8488
1.002	9938.86	3.25	13.1703
1.028	10327.83	3.33	13.6902
1.054	10612.07	3.42	14.0716
1.079	10980.00	3.50	14.5644
1.105	11423.64	3.58	15.1582
1.131	11933.29	3.67	15.8400
1.156	12408.73	3.75	16.4771
1.182	13157.25	3.83	17.4775
1.208	13935.13	3.92	18.5179
1.233	14716.73	4.00	18.3250
1.310	17233.03	4.25	21.3422
1.387	20537.96	4.50	25.2900
1.464	24889.93	4.75	30.7058
1.541	30054.83	5.00	37.3106
1.618	36305.99	5.25	45.1386

H_2O at 25°C

S	DI	THETA	ERROR
1,695	43690,84	5,50	54,4057
1,771	50940,91	5,75	63,5383
1,848	57131,56	6,00	71,3824
1,925	60291,33	6,25	75,4653
2,002	61572,81	6,50	77,2129
2,078	59213,82	6,75	74,3984
2,155	56116,54	7,00	70,6483
2,231	52182,36	7,25	65,8319
2,308	48917,33	7,50	61,8454
2,384	46240,51	7,75	58,5909
2,461	44014,95	8,00	55,8987
2,537	42715,50	8,25	54,3764
2,614	42295,53	8,50	53,9727
2,690	41711,19	8,75	53,3602
2,766	41252,02	9,00	52,9085
2,842	40522,02	9,25	52,1094
2,918	38601,13	9,50	49,7737
2,994	35871,18	9,75	46,3821
3,070	32707,64	10,00	91,4433
3,222	25483,43	10,50	71,7952
3,374	20331,09	11,00	58,2171
3,525	17495,36	11,50	51,2136
3,676	16618,56	12,00	48,1472
3,827	16088,08	12,50	46,9355
3,978	15966,40	13,00	46,9175
4,128	16002,38	13,50	47,3755
4,278	15953,74	14,00	47,5973
4,427	15673,39	14,50	47,1345
4,576	15016,53	15,00	45,5310
4,725	14419,15	15,50	44,0902
4,874	13572,50	16,00	41,8627
5,022	12600,05	16,50	39,2106
5,170	11579,86	17,00	36,3659
5,317	10628,33	17,50	33,6906
5,464	9826,29	18,00	31,4469
5,610	9003,92	18,50	29,0972
5,757	8384,92	19,00	27,3675
5,902	7886,50	19,50	26,0027
6,047	7564,59	20,00	25,1998
6,192	7299,69	20,50	24,5735
6,337	7087,01	21,00	24,1128
6,480	6889,63	21,50	23,6957
6,624	6675,47	22,00	23,2118
6,766	6530,01	22,50	22,9589
6,909	6300,19	23,00	22,4003
7,051	6049,55	23,50	21,7539
7,192	5742,39	24,00	20,8865
7,332	5470,44	24,50	20,1275
7,473	5151,17	25,00	16,5591
7,612	4852,05	25,50	15,8211
7,751	4568,96	26,00	15,1201
7,890	4353,56	26,50	14,5346
8,027	4150,81	27,00	14,0215
8,164	3959,12	27,50	13,5321
8,301	3803,56	28,00	13,1539
8,437	3701,39	28,50	12,9514
8,572	3584,35	29,00	12,6891
8,707	3509,76	29,50	12,5701
8,841	3410,76	30,00	12,3572
8,974	3340,68	30,50	12,2424
9,107	3258,58	31,00	12,0773
9,239	3174,68	31,50	11,8985
9,370	3091,28	32,00	11,7142
9,500	2995,13	32,50	11,4735
9,630	2915,28	33,00	11,2870
9,759	2825,01	33,50	11,0520
9,887	2727,94	34,00	10,7813
10,015	2637,88	34,50	10,5292
10,142	2568,84	35,00	10,3528
10,268	2494,48	35,50	10,1473

H_2O at 25°C

S	DI	THETA	ERROR
10,393	2441,56	36,00	8,9543
10,517	2380,07	36,50	8,8355
10,641	2342,96	37,00	8,7412
10,764	2300,22	37,50	8,6526
10,886	2265,78	38,00	8,5917
11,007	2238,02	38,50	8,5466
11,127	2198,85	39,00	8,4529
11,247	2180,52	39,50	8,4342
11,366	2154,12	40,00	8,3796
11,483	2134,62	40,50	8,3470
11,600	2111,09	41,00	8,2937
11,716	2078,97	41,50	8,2017
11,831	2055,19	42,00	8,1374
11,946	2020,82	42,50	8,0261
12,059	1981,34	43,00	7,8894
12,171	1956,58	43,50	7,8063
12,283	1927,25	44,00	7,7002
12,393	1896,55	44,50	7,5841
12,503	1866,73	45,00	7,4669
12,611	1850,27	45,50	7,3990
12,719	1831,20	46,00	7,3164
12,826	1806,65	46,50	7,2081
12,932	1787,59	47,00	7,1179
13,036	1770,33	47,50	7,0312
13,140	1759,47	48,00	6,9665
13,243	1751,01	48,50	5,1555
13,445	1723,25	49,50	5,0293
13,644	1699,02	50,50	4,8854
13,838	1676,54	51,50	4,7721
14,028	1648,70	52,50	4,6250
14,214	1626,24	53,50	4,4888
14,395	1604,31	54,50	4,3508
14,572	1578,34	55,50	4,2000
14,744	1551,88	56,50	4,0475
14,913	1530,97	57,50	3,9098
15,076	1510,22	58,50	3,7735
15,235	1499,83	59,50	3,6642
15,389	1486,67	60,50	3,5497
15,539	1475,33	61,50	3,4415
15,684	1467,73	62,50	3,3444
15,824	1459,31	63,50	3,2480
15,959	1458,16	64,50	3,1703

NUMBER OF POINTS IS 182

H_2O at 25°C

DATA FOR H_2O at 50°C

GROUP 1

SECTION 1, RUN 1, 1/2 DEG. DIV.

NUMBER OF T IS 24

T	T	T	T	T	T	T	T	T	T
24.63	23.83	20.85	18.15	15.25	13.55	11.68	10.26	9.36	8.91
8.85	9.28	9.77	10.63	11.45	12.35	13.26	14.21	14.92	15.62
16.48	17.65	19.09	21.36						

GROUP 2

SECTION 1, RUN 2, 1/2 DEG. DIV.

NUMBER OF T IS 24

T	T	T	T	T	T	T	T	T	T
24.50	23.80	21.19	18.54	15.85	14.00	12.24	10.82	9.96	9.55
9.59	10.05	10.60	11.61	12.58	13.69	14.70	15.64	16.39	17.37
18.13	19.30	20.82	22.99						

GROUP 3

SECTION 1, RUN 3, 1/2 DEG. DIV.

NUMBER OF T IS 24

T	T	T	T	T	T	T	T	T	T
25.25	24.29	21.35	18.77	15.88	13.93	12.24	10.74	9.88	9.40
9.44	9.74	10.43	11.31	12.33	13.52	14.45	15.43	16.47	17.22
18.41	19.85	21.44	23.93						

GROUP 4

SECTION 2, RUNS 1,2 AND 3, 1/2 DEG. DIV.

NUMBER OF T IS 9

T	T	T	T	T	T	T	T	T	T
24.37	32.74	43.59	25.85	33.82	43.35	26.78	34.96	44.77	

GROUP 5

SECTION 3, RUN 1, 1 DEG. DIV.

NUMBER OF T IS 20

T	T	T	T	T	T	T	T	T	T
15.94	20.27	25.47	29.82	32.72	34.55	35.93	37.17	38.57	40.57
42.95	46.61	50.28	55.36	61.67	68.10	75.05	82.77	91.07	98.13

GROUP 6

SECTION 3, RUN 2, 1 DEG. DIV.

NUMBER OF T IS 20

T	T	T	T	T	T	T	T	T	T
15.98	20.58	25.77	30.15	33.24	35.46	37.16	38.41	40.01	41.98
44.63	47.99	52.33	57.96	62.98	69.45	77.40	84.53	92.44	100.90

GROUP 7

SECTION 4, RUNS 1 AND 2, 1 DEG. DIV.

NUMBER OF T IS 6

T	T	T	T	T	T	T	T	T	T
105.53	113.12	120.63	107.61	115.22	122.52				

GROUP 8

SECTION 5, RUN 1, 2 DEG. DIV.

NUMBER OF T IS 30

T	T	T	T	T	T	T	T	T	T
14.56	15.15	15.89	16.65	17.29	18.16	19.03	19.99	21.03	22.77
24.09	25.90	27.74	29.52	31.65	33.73	36.00	37.92	40.27	42.41
44.01	46.80	49.13	52.17	54.39	58.01	60.97	64.42	68.46	72.29

GROUP 9

SECTION 5, RUN 2, 2 DEG. DIV.

NUMBER OF T IS 30

T	T	T	T	T	T	T	T	T	T
14.34	14.85	15.60	16.15	16.86	17.69	18.25	19.65	20.92	22.21
23.66	25.42	27.30	29.30	31.10	33.30	35.31	37.36	39.41	41.60
43.58	45.72	47.75	50.67	53.24	57.20	59.41	62.82	66.80	70.58

GROUP 10

SECTION 5, RUN 3, 2 DEG. DIV.

NUMBER OF T IS 30

T	T	T	T	T	T	T	T	T	T
15.43	16.22	16.87	17.49	18.13	18.92	19.95	21.00	22.31	23.78
25.55	27.30	29.48	31.29	33.62	35.68	38.17	40.24	42.37	44.67
47.10	49.36	52.02	55.60	58.21	61.21	65.06	69.28	72.81	76.88

GROUP 11

SECTION 5, RUN 4, 2 DEG. DIV.

NUMBER OF T IS 30

T	T	T	T	T	T	T	T	T	T
15.79	16.51	17.18	17.85	18.73	19.32	20.36	21.88	22.88	24.53
26.23	27.93	30.22	32.39	34.90	36.59	39.00	41.33	44.39	46.71
48.72	50.65	53.99	56.34	59.23	62.55	66.05	70.40	74.70	78.92

GROUP 12

SECTION 5, RUN 5, 2 DEG. DIV.

NUMBER OF T IS 30

T	T	T	T	T	T	T	T	T	T
14.90	15.45	16.18	16.84	17.62	18.23	19.27	20.56	21.79	23.48
24.77	26.60	28.59	30.41	32.34	34.82	36.60	38.94	41.06	43.44
45.47	47.99	50.95	53.30	55.80	59.24	62.18	66.30	70.07	73.64

GROUP 13

SECTION 5, RUN6, 2 DEG. DIV.

NUMBER OF T IS 30

T	T	T	T	T	T	T	T	T	T
15.26	15.94	16.71	17.37	18.22	19.14	19.99	21.32	22.15	23.89
25.83	27.45	29.19	31.53	33.59	35.95	37.87	40.30	42.29	44.26
47.03	49.76	51.79	54.85	57.58	60.62	64.32	67.67	71.94	76.25

GROUP 14

SECTION 5, RUN 7, 2 DEG. DIV.

NUMBER OF T IS 30

T	T	T	T	T	T	T	T	T	T
15.43	16.09	16.96	17.66	18.39	19.11	20.22	21.44	22.76	24.33
26.21	27.91	30.02	31.81	33.91	36.01	38.31	40.78	42.97	45.31
47.73	50.33	52.73	55.88	58.66	62.47	65.67	69.37	73.81	77.27

GROUP 15

SECTION 5, RUN 8, 2 DEG. DIV.

NUMBER OF T IS 30

T	T	T	T	T	T	T	T	T	T
16.67	17.52	18.23	18.97	19.91	20.42	21.72	23.05	24.34	26.26
27.64	29.63	31.96	33.70	36.48	38.93	41.07	43.59	45.97	48.51
50.70	53.34	55.50	59.32	62.69	66.07	69.39	74.39	78.30	82.37

GROUP 16

SECTION 6, RUNS 1,2,3,4,5,6,7,8, 2 DEG. DIV.

NUMBER OF T IS 32

T	T	T	T	T	T	T	T	T	T
75.76	80.05	84.41	88.10	74.42	77.86	81.72	85.13	81.70	85.76
90.74	94.24	83.32	86.96	91.66	96.16	77.47	82.09	86.07	89.43
80.02	83.53	88.62	92.24	81.91	86.34	90.35	94.40	86.94	91.12
94.88	99.41								

GROUP 17

SECTION 7, RUN 1, 4 DEG. DIV.

NUMBER OF T IS 31

T	T	T	T	T	T	T	T	T	T
23.96	25.05	26.16	27.37	28.49	29.60	30.05	31.43	32.23	33.24
33.70	34.52	35.68	36.15	37.16	38.00	38.55	39.27	39.92	41.15
41.49	42.09	42.63	42.97	43.24	43.71	44.26	44.21	44.28	44.68
44.13									

GROUP 18

SECTION 7, RUN 2, 4 DEG. DIV.

NUMBER OF T IS 31

T	T	T	T	T	T	T	T	T	T
24.19	24.97	26.13	27.20	28.25	29.42	29.79	30.88	31.99	32.70
33.88	34.29	34.96	35.76	36.66	37.31	38.02	38.74	39.55	40.43
40.96	41.50	42.37	42.25	42.75	42.93	43.23	43.20	43.78	43.96
43.89									

GROUP 19

SECTION 7, RUN 3, 4 DEG. DIV.

NUMBER OF T IS 31

T	T	T	T	T	T	T	T	T	T
23.80	24.71	25.95	26.77	27.70	28.77	29.70	30.61	31.40	32.01
33.12	33.52	34.13	35.02	36.32	36.66	37.07	38.15	38.99	39.68
40.39	40.98	41.97	41.86	42.16	42.61	43.29	43.22	43.59	44.09
43.91									

GROUP 20

SECTION 7, RUN 4, 4 DEG. DIV.

NUMBER OF T IS 31

T	T	T	T	T	T	T	T	T	T
24.26	25.30	26.67	27.86	28.84	29.57	30.55	31.60	32.20	33.34
33.96	34.73	35.86	36.46	37.41	38.19	38.96	39.96	40.66	40.96
41.73	42.26	42.83	43.67	43.66	44.39	44.37	44.43	44.38	44.81
44.61									

GROUP 21

SECTION 7, RUN 5, 4 DEG. DIV.

NUMBER OF T IS 31

T	T	T	T	T	T	T	T	T	T
24.25	25.47	26.30	27.54	28.44	29.34	30.29	30.98	31.84	32.65
33.19	34.25	34.84	35.89	36.70	37.63	37.92	39.04	39.64	40.09
41.21	41.25	42.22	42.37	42.67	43.00	43.29	43.55	43.62	43.37
43.81									

GROUP 22

SECTION 7, RUN 6, 4 DEG. DIV.

NUMBER OF T IS 31

T	T	T	T	T	T	T	T	T	T
24.67	25.83	26.93	27.89	29.18	30.15	31.41	32.02	32.94	33.80
34.87	35.43	36.36	37.24	38.21	39.01	39.68	40.67	41.57	41.89
42.44	43.81	43.87	44.28	44.89	45.47	45.46	46.02	46.05	46.14
46.27									

GROUP 23

SECTION 7, RUN 7, 4 DEG. DIV.

NUMBER OF T IS 31

T	T	T	T	T	T	T	T	T	T
23.93	25.11	26.26	27.26	28.21	29.39	30.36	31.19	32.34	32.98
33.78	34.22	35.26	36.29	37.03	37.91	38.65	39.82	40.29	40.95
41.51	42.44	42.93	43.72	43.69	44.21	44.21	44.89	45.26	44.90
44.93									

GROUP 24

SECTION 7, RUN 8, 4 DEG. DIV.

NUMBER OF T IS 31

T	T	T	T	T	T	T	T	T	T
26.16	27.31	28.21	29.48	30.76	31.40	32.40	33.44	34.15	35.02
35.85	36.60	37.67	38.34	39.52	40.35	41.09	41.81	42.64	42.93
44.22	44.56	44.93	45.95	46.23	46.50	46.55	46.90	47.17	47.12
47.17									

GROUP 25

SECTION 7, RUN 9, 4 DEG. DIV.

NUMBER OF T IS 31

T	T	T	T	T	T	T	T	T	T
23.45	24.49	25.71	26.74	27.82	28.84	29.72	30.57	31.18	32.17
33.04	33.88	34.60	35.64	36.47	37.07	37.77	38.55	39.22	40.14
40.54	41.43	42.09	42.17	43.30	43.49	43.14	43.47	43.82	44.19
43.96									

GROUP 26

SECTION 7, RUN 10, 4 DEG. DIV.

NUMBER OF T IS 31

T	T	T	T	T	T	T	T	T	T
23.57	24.78	25.92	27.27	28.00	28.96	29.90	31.06	31.69	32.30
33.25	33.97	34.93	35.71	36.69	37.54	38.24	38.55	39.22	40.14
40.54	41.43	42.09	42.17	43.30	43.36	43.61	44.06	44.08	44.31
44.65									

GROUP 27

SECTION 8, RUN 1, 4 DEG. DIV.

NUMBER OF T IS 15

T	T	T	T	T	T	T	T	T	T
44.26	44.26	43.68	43.61	42.84	42.87	42.06	41.99	41.05	40.51
39.61	38.66	37.86	36.70	35.69					

GROUP 28

SECTION 8, RUN 2, 4 DEG. DIV.

NUMBER OF T IS 15

T	T	T	T	T	T	T	T	T	T
43.61	43.96	43.38	43.15	43.02	42.87	42.25	42.11	41.20	40.29
39.59	38.59	37.34	36.70	35.61					

GROUP 29

SECTION 8, RUN 3, 4 DEG. DIV.

NUMBER OF T IS 15

T	T	T	T	T	T	T	T	T	T
43.71	43.84	43.46	43.55	43.13	42.35	42.32	41.46	40.71	40.08
39.02	38.54	37.33	36.74	35.74					

GROUP 30

SECTION 8, RUN 4, 4 DEG. DIV.

NUMBER OF T IS 15

T	T	T	T	T	T	T	T	T	T
45.07	44.96	44.98	44.61	44.22	43.72	42.97	42.58	42.25	41.42
40.47	39.46	38.59	37.68	36.60					

GROUP 31

SECTION 8, RUN 5, 4 DEG. DIV.

NUMBER OF T IS 15

T	T	T	T	T	T	T	T	T	T
43.75	43.54	43.31	43.23	42.97	42.50	42.35	41.57	41.42	40.51
39.64	38.62	38.06	36.93	36.00					

GROUP 32

SECTION 8, RUN 6, 4 DEG. DIV.

NUMBER OF T IS 15

T	T	T	T	T	T	T	T	T	T
46.63	46.51	46.58	46.50	46.47	45.62	45.22	44.79	44.21	43.61
42.67	41.44	40.88	39.89	38.68					

GROUP 33

SECTION 8, RUN 7, 4 DEG. DIV.

NUMBER OF T IS 15

T	T	T	T	T	T	T	T	T	T
45.35	45.09	45.30	45.16	45.28	44.06	44.77	43.90	43.59	42.72
42.28	41.48	40.47	39.32	38.40					

GROUP 34

SECTION 8, RUN 8, 4 DEG. DIV.

NUMBER OF T IS 15

T	T	T	T	T	T	T	T	T	T
47.49	47.17	47.05	46.85	46.84	46.30	45.64	45.31	44.34	43.32
42.88	41.62	40.61	39.66	38.36					

GROUP 35

SECTION 8, RUN 9, 4 DEG. DIV.

NUMBER OF T IS 15

T	T	T	T	T	T	T	T	T	T
44.13	44.56	44.34	44.30	44.45	44.26	43.81	43.50	42.76	42.11
41.47	40.39	39.81	38.73	37.91					

GROUP 36

SECTION 8, RUN 10, 4 DEG. DIV.

NUMBER OF T IS 15

T	T	T	T	T	T	T	T	T	T
44.46	44.72	44.98	44.62	44.70	44.25	43.97	43.71	42.98	42.40
41.59	41.16	40.23	39.47	38.80					

SUMMARY OF DATA AND CORRECTIONS BEFORE NORMALIZATION

SECTION 1

NUMBER OF RUNS IS 3

NUMBER OF THETAS IS 24

DELTA THETA .250

THETA MIN 4.000

THETA MAX 9.750

NUMBER OF COUNTS IS 150000.00

BACKGROUND 4.70

CORRECTED FOR POLARIZATION

FACTOR FOR PENETRATION CORRECTION(2*ALPHA*MU) IS .31700

SECTION 2

NUMBER OF RUNS IS 3

NUMBER OF THETAS IS 3

DELTA THETA .500

```
THETA MIN 10.000
THETA MAX 11.000
NUMBER OF COUNTS IS  150000.00
BACKGROUND  4.70
CORRECTED FOR POLARIZATION
FACTOR FOR PENETRATION CORRECTION(2*ALPHA*MU) IS      .31700
                SECTION    3
NUMBER OF RUNS IS   2
NUMBER OF THETAS IS  20
DELTA THETA   .500
THETA MIN 10.000
THETA MAX 19.500
NUMBER OF COUNTS IS  200000.00
BACKGROUND  3.18
CORRECTED FOR POLARIZATION
FACTOR FOR PENETRATION CORRECTION(2*ALPHA*MU) IS      .63390
                SECTION    4
NUMBER OF RUNS IS   2
NUMBER OF THETAS IS   3
DELTA THETA   .500
THETA MIN 20.000
THETA MAX 21.000
NUMBER OF COUNTS IS  200000.00
BACKGROUND  3.18
CORRECTED FOR POLARIZATION
FACTOR FOR PENETRATION CORRECTION(2*ALPHA*MU) IS      .63390
                SECTION    5
NUMBER OF RUNS IS   8
NUMBER OF THETAS IS  30
DELTA THETA   .500
THETA MIN 20.000
THETA MAX 34.500
NUMBER OF COUNTS IS  400000.00
BACKGROUND  3.26
CORRECTED FOR POLARIZATION
FACTOR FOR PENETRATION CORRECTION(2*ALPHA*MU) IS     1.26780
```

H_2O at 50°C

SECTION 6

NUMBER OF RUNS IS 8

NUMBER OF THETAS IS 4

DELTA THETA .500

THETA MIN 35.000

THETA MAX 36.500

NUMBER OF COUNTS IS 400000.00

BACKGROUND 3.26

CORRECTED FOR POLARIZATION

FACTOR FOR PENETRATION CORRECTION(2*ALPHA*MU) IS 1.26780

SECTION 7

NUMBER OF RUNS IS 10

NUMBER OF THETAS IS 31

DELTA THETA .500

THETA MIN 35.000

THETA MAX 50.000

NUMBER OF COUNTS IS 500000.00

BACKGROUND 5.17

CORRECTED FOR POLARIZATION

FACTOR FOR PENETRATION CORRECTION(2*ALPHA*MU) IS 2.53560

SECTION 8

NUMBER OF RUNS IS 10

NUMBER OF THETAS IS 15

DELTA THETA 1.000

THETA MIN 50.500

THETA MAX 64.500

NUMBER OF COUNTS IS 500000.00

BACKGROUND 3.03

CORRECTED FOR POLARIZATION

FACTOR FOR PENETRATION CORRECTION(2*ALPHA*MU) IS 2.53560

NORMALIZATION

NUMBER OF SECTIONS NORMALIZED TO SUCCEEDING SECTIONS IS 2

NUMBER OF SECTIONS REQUIRING NO NORMALIZATION IS 1

NUMBER OF SECTIONS NORMALIZED TO PRECEDING SECTIONS IS 1

H_2O at 50°C

NORMALIZATION TO SUCCEEDING SECTIONS

SECTION 1

NUMBER OF THETAS IS 27

NUMBER OF OVERLAP POINTS WITH FOLLOWING SECTION 3

NUMBER OF OVERLAP POINTS WITH PRECEDING SECTION IS 0

R IS 2.10726

SECTION 2

NUMBER OF THETAS IS 23

NUMBER OF OVERLAP POINTS WITH FOLLOWING SECTION 3

NUMBER OF OVERLAP POINTS WITH PRECEDING SECTION IS 3

R IS 2.30162

SECTIONS WITH NO NORMALIZATION

SECTION 1

NUMBER OF THETAS IS 34

NUMBER OF OVERLAP POINTS WITH FOLLOWING SECTION 4

NUMBER OF OVERLAP POINTS WITH PRECEDING SECTION IS 3

NORMALIZATION TO PRECEDING SECTIONS

SECTION 1

NUMBER OF THETAS IS 46

NUMBER OF OVERLAP POINTS WITH FOLLOWING SECTION 0

NUMBER OF OVERLAP POINTS WITH PRECEDING SECTION IS 4

R IS .43433

S	DI	THETA	ERROR
1.233	16780.16	4.00	45.1469
1.310	17897.70	4.25	9.9404
1.387	20934.27	4.50	11.6418
1.464	24653.34	4.75	13.7287
1.541	29969.70	5.00	16.7131
1.618	34931.27	5.25	19.5092
1.695	41213.85	5.50	23.0544
1.771	48144.35	5.75	26.9755
1.848	53899.93	6.00	30.2523
1.925	58006.89	6.25	32.6158

S	DI	THETA	ERROR
2.002	59487.75	6.50	33.5108
2.078	58521.34	6.75	33.0302
2.155	56629.48	7.00	32.0265
2.231	53275.80	7.25	30.1925
2.308	50355.03	7.50	28.5985
2.384	47386.40	7.75	26.9734
2.461	45243.40	8.00	25.8115
2.537	43355.80	8.25	24.7930
2.614	42022.69	8.50	24.0891
2.690	40885.01	8.75	23.4955

H_2O at 50°C

S	DI	THETA	ERROR
2.766	39571.84	9.00	22.7993
2.842	37739.32	9.25	21.8009
2.918	35685.91	9.50	20.6706
2.994	32735.75	9.75	19.0144
3.070	29282.47	10.00	30.7625
3.222	23360.21	10.50	24.9571
3.374	18962.56	11.00	20.6538
3.525	16915.30	11.50	18.3167
3.676	15854.73	12.00	17.2836
3.827	15393.93	12.50	16.8983
3.978	15190.23	13.00	16.7953
4.128	15127.72	13.50	16.8515
4.278	14978.54	14.00	16.8146
4.427	14672.72	14.50	16.6029
4.576	14227.15	15.00	16.2313
4.725	13544.85	15.50	15.5838
4.874	12837.39	16.00	14.8984
5.022	11945.68	16.50	13.9875
5.170	11156.94	17.00	13.1836
5.317	10383.93	17.50	12.3852
5.464	9619.32	18.00	11.5832
5.610	8997.20	18.50	10.9402
5.757	8416.83	19.00	10.3367
5.902	7961.31	19.50	9.8768
6.047	7550.29	20.00	15.2505
6.192	7307.20	20.50	15.0833
6.337	7084.57	21.00	14.8848
6.480	7015.01	21.50	14.7747
6.624	6859.33	22.00	14.6057
6.766	6733.19	22.50	14.4968
6.909	6536.67	23.00	14.2322
7.051	6273.67	23.50	13.8150
7.192	6069.52	24.00	13.5189
7.332	5770.60	24.50	13.0018
7.473	5520.44	25.00	12.5831
7.612	5265.33	25.50	12.1421
7.751	4996.29	26.00	11.6573
7.890	4779.96	26.50	11.2841
8.027	4551.92	27.00	10.8728
8.164	4356.06	27.50	10.5280
8.301	4184.64	28.00	10.2331
8.437	4021.96	28.50	9.9512
8.572	3875.35	29.00	9.7010
8.707	3744.85	29.50	9.4838
8.841	3634.34	30.00	9.3106
8.974	3514.01	30.50	9.1058
9.107	3402.46	31.00	8.9170
9.239	3267.96	31.50	8.6607
9.370	3165.11	32.00	8.4810
9.500	3033.78	32.50	8.2177
9.630	2926.82	33.00	8.0127
9.759	2798.59	33.50	7.7418
9.887	2680.82	34.00	7.4919
10.015	2578.78	34.50	7.2785
10.142	2470.60	35.00	6.2783
10.268	2388.49	35.50	6.1394
10.393	2306.56	36.00	5.9997
10.517	2237.49	36.50	5.8707
10.641	2183.65	37.00	5.7656
10.764	2132.58	37.50	5.6754
10.886	2090.86	38.00	5.6062
11.007	2044.73	38.50	5.5214
11.127	2009.26	39.00	5.4617
11.247	1974.08	39.50	5.3992
11.366	1938.50	40.00	5.3322
11.483	1912.73	40.50	5.2887
11.600	1875.54	41.00	5.2102
11.716	1842.44	41.50	5.1396
11.831	1802.51	42.00	5.0466
11.946	1773.57	42.50	4.9809

H_2O at 50°C

S	DI	THETA	ERROR
12.059	1750.11	43.00	4.9276
12.171	1715.99	43.50	4.8411
12.283	1688.34	44.00	4.7699
12.393	1662.45	44.50	4.7008
12.503	1636.19	45.00	4.6279
12.611	1609.44	45.50	4.5509
12.719	1584.42	46.00	4.4763
12.826	1568.81	46.50	4.4259
12.932	1548.80	47.00	4.3608
13.036	1530.58	47.50	4.2985
13.140	1518.68	48.00	4.2519
13.243	1503.14	48.50	4.1931
13.345	1488.36	49.00	4.1346
13.445	1474.58	49.50	4.0772
13.545	1465.84	50.00	4.0320
13.644	1454.57	50.50	3.9784
13.838	1431.26	51.50	3.8649
14.028	1409.81	52.50	3.7519
14.214	1385.16	53.50	3.6271
14.395	1360.01	54.50	3.4990
14.572	1342.81	55.50	3.3899
14.744	1318.69	56.50	3.2628
14.913	1296.16	57.50	3.1403
15.076	1278.38	58.50	3.0303
15.235	1263.10	59.50	2.9275
15.389	1247.81	60.50	2.8264
15.539	1236.78	61.50	2.7370
15.684	1224.16	62.50	2.6463
15.824	1213.46	63.50	2.5622
15.959	1205.26	64.50	2.4860

NUMBER OF POINTS IS 120

H_2O at 50°C

DATA FOR H_2O at 75°C

GROUP 1

SECTION 1, RUN 1, 1/2 DEG. DIV.,4.0,0.25,9.75, 50K, 3 RUNS.

NUMBER OF T IS 24

T	T	T	T	T	T	T	T	T	T
28.82	27.62	24.63	21.60	18.62	16.68	14.65	12.80	11.91	11.11
11.07	11.33	11.92	13.04	13.81	15.41	16.62	17.75	18.75	20.05
21.76	23.56	25.43	28.86						

GROUP 2

SECTION 1, RUN 2.

NUMBER OF T IS 24

T	T	T	T	T	T	T	T	T	T
30.17	29.64	25.49	22.32	19.76	17.43	15.36	13.78	12.14	11.30
11.29	11.76	12.65	12.96	14.36	15.58	16.19	17.73	18.96	20.06
22.25	23.43	26.57	28.75						

GROUP 3

SECTION 1, RUN 3.

NUMBER OF T IS 24

T	T	T	T	T	T	T	T	T	T
30.36	28.19	24.86	22.46	19.32	16.98	14.60	12.84	11.71	11.25
11.41	11.72	11.99	12.13	13.50	14.87	15.76	16.99	17.91	18.96
19.84	21.69	23.85	26.36						

GROUP 4

SECTION 2. RUNS 1,2,3, 1/2 DEG. DIV.,10.0,0.5,13.0, 50K, 3 RUNS.

NUMBER OF T IS 21

T	T	T	T	T	T	T	T	T	T
33.18	42.20	54.24	66.10	74.42	80.42	88.06	33.87	43.34	54.37
65.57	72.96	80.12	85.31	29.39	38.46	48.53	55.98	63.14	67.88
70.43									

GROUP 5

SECTION 3, RUN 1, 1 DEG. DIV., 10.0,0.5,22.5, 50K, 4 RUNS.

NUMBER OF T IS 26

T	T	T	T	T	T	T	T	T	T
9.91	12.61	15.50	18.08	20.10	21.09	21.89	22.73	23.46	24.71
26.40	28.01	30.93	34.19	37.23	41.64	46.07	50.50	55.54	60.11
64.23	67.20	71.16	75.29	79.80	83.03				

GROUP 6

SECTION 3, RUN 2.

NUMBER OF T IS 26

T	T	T	T	T	T	T	T	T	T
10.15	12.92	15.86	18.39	20.18	21.18	21.99	23.04	23.77	25.17
26.55	28.49	31.45	34.50	37.82	42.35	47.08	51.97	56.08	60.94
64.42	69.42	72.73	76.09	79.42	84.05				

GROUP 7

SECTION 3, RUN 3.

NUMBER OF T IS 26

T	T	T	T	T	T	T	T	T	T
9.85	12.51	15.12	17.81	19.49	20.55	21.38	22.34	23.03	24.70
25.82	27.68	30.43	33.48	37.33	40.75	45.22	49.69	54.54	58.96
62.91	66.35	70.12	73.40	78.45	81.58				

GROUP 8

SECTION 3, RUN4.

NUMBER OF T IS 26

T	T	T	T	T	T	T	T	T	T
9.76	12.49	15.49	17.70	19.11	20.48	21.14	22.09	23.10	24.07
25.57	27.85	30.19	33.50	36.51	40.20	45.16	49.32	53.56	57.40
61.59	64.87	68.44	72.21	75.71	78.98				

GROUP 9

SECTION 4, RUNS 1,2,3,4, 1 DEG. DIV., 23.0,0.5,24.0, 50K, 4 RUNS,

NUMBER OF T IS 12

T	T	T	T	T	T	T	T	T	T
87.08	92.59	99.22	89.39	95.42	101.98	86.43	91.95	97.72	84.83
89.87	95.75								

GROUP 10

SECTION 5, RUN 1, 2 DEG. DIV., 23.0,0.5,38.0, 50K, 10 RUNS.

NUMBER OF T IS 31

T	T	T	T	T	T	T	T	T	T
30.94	32.99	35.16	37.35	40.48	43.55	46.51	49.31	53.79	56.07
59.98	62.55	66.05	68.74	71.54	74.88	78.50	81.77	84.36	89.81
92.44	97.18	102.39	107.42	112.94	116.95	121.06	125.96	130.52	133.81
137.24									

GROUP 11

SECTION 5, RUN 2.

NUMBER OF T IS 31

T	T	T	T	T	T	T	T	T	T
29.17	31.09	32.87	35.31	37.97	40.28	43.58	46.39	49.50	52.26
55.68	58.40	60.94	64.13	66.83	69.68	72.21	75.61	79.12	82.33
86.01	90.01	94.54	98.51	102.32	106.62	111.69	114.65	118.57	122.01
125.06									

GROUP 12

SECTION 5, RUN 3.

NUMBER OF T IS 31

T	T	T	T	T	T	T	T	T	T
28.03	29.64	31.87	34.04	36.15	39.38	41.90	45.00	47.99	50.67
53.68	56.58	59.18	61.46	64.59	67.48	69.67	73.08	75.92	79.16
83.00	86.36	90.68	94.49	99.11	103.85	107.05	110.59	114.96	117.22
120.93									

GROUP 13

SECTION 5, RUN 4.

NUMBER OF T IS 31

T	T	T	T	T	T	T	T	T	T
29.60	31.19	33.26	35.66	37.90	41.06	44.08	47.29	50.58	53.08
56.39	59.31	62.20	64.76	68.30	71.54	74.10	76.62	81.18	84.99
88.51	93.09	97.63	101.08	105.92	110.05	112.76	118.40	120.57	124.37
126.65									

GROUP 14

SECTION 5, RUN 5.

NUMBER OF T IS 31

T	T	T	T	T	T	T	T	T	T
28.95	30.69	32.46	34.75	37.32	39.93	42.56	45.69	48.92	51.68
54.75	57.96	61.36	63.41	65.63	68.91	71.70	74.79	78.37	81.44
86.23	90.45	94.91	97.69	102.55	106.74	110.26	114.39	119.38	121.96
125.34									

GROUP 15

SECTION 5, RUN 6.

NUMBER OF T IS 31

T	T	T	T	T	T	T	T	T	T
28.71	30.68	32.81	35.17	37.35	40.60	43.14	46.46	49.19	52.34
55.51	58.58	61.41	64.69	66.45	69.39	72.31	74.94	78.71	82.74
86.44	90.14	94.30	99.17	103.12	108.87	111.70	116.73	120.20	122.32
127.07									

GROUP 16

SECTION 5, RUN 7.

NUMBER OF T IS 31

T	T	T	T	T	T	T	T	T	T
29.35	30.82	33.29	35.66	37.91	41.05	43.64	47.00	50.25	53.23
56.45	59.66	62.00	64.92	67.40	70.56	73.44	76.62	80.53	84.20
86.94	91.56	95.60	100.32	104.23	109.48	112.30	116.80	118.80	123.55
127.04									

GROUP 17

SECTION 5, RUN 8.

NUMBER OF T IS 31

T	T	T	T	T	T	T	T	T	T
29.20	31.43	33.28	35.45	38.37	40.87	43.77	46.83	50.02	52.95
56.13	59.05	62.15	65.34	67.18	70.74	73.57	77.32	79.71	83.12
87.02	91.37	95.39	100.47	103.73	107.96	112.54	115.61	119.95	122.84
126.99									

GROUP 18

SECTION 5, RUN 9.

NUMBER OF T IS 31

T	T	T	T	T	T	T	T	T	T
28.78	30.51	32.79	34.70	37.48	40.60	43.22	46.15	49.22	52.14
55.05	56.59	57.11	60.70	62.69	65.49	67.96	70.52	74.06	77.29
80.95	84.54	88.77	92.66	97.43	101.27	105.06	109.03	112.29	115.45
118.08									

GROUP 19

SECTION 5, RUN 10.

NUMBER OF T IS 31

T	T	T	T	T	T	T	T	T	T
29.96	31.77	33.67	35.95	38.38	41.15	44.48	47.69	50.79	54.03
57.11	60.16	63.12	65.23	68.81	71.75	74.47	77.13	81.13	84.20
87.84	91.99	96.10	100.53	104.13	108.93	113.35	118.36	119.98	124.06
126.48									

GROUP 20

SECTION 6, RUNS 1 THROUGH 10, 2 DEG.DIV.,38.5,0.5,39.5, 50K, 10 RUNS.

NUMBER OF T IS 30

T	T	T	T	T	T	T	T	T	T
141.46	143.61	147.61	128.94	131.71	134.75	123.47	127.76	129.70	132.10
134.60	138.91	128.05	130.18	134.01	129.09	132.05	134.65	130.55	132.49
134.26	129.20	131.96	134.58	122.25	123.36	127.01	129.99	132.28	135.45

GROUP 21

SECTION 7, RUN1, 4 DEG.DIV., 38.5,0.5,50.5, 50K, 10 RUNS.

NUMBER OF T IS 25

T	T	T	T	T	T	T	T	T	T
53.31	54.31	55.34	57.53	58.36	59.72	61.21	62.24	63.27	64.91
66.10	66.94	68.76	68.52	70.72	70.97	71.37	72.51	72.48	72.80
72.79	73.31	73.72	73.89	73.76					

GROUP 22

SECTION 7, RUN 2.

NUMBER OF T IS 25

T	T	T	T	T	T	T	T	T	T
52.70	53.52	54.45	56.16	57.12	58.22	59.78	61.15	62.18	63.36
64.88	65.73	66.54	67.13	68.25	68.92	69.02	70.02	71.34	70.82
71.99	71.63	72.05	72.13	71.87					

GROUP 23

SECTION 7, RUN 3.

NUMBER OF T IS 25

T	T	T	T	T	T	T	T	T	T
54.09	55.29	56.78	58.04	59.35	60.23	61.76	62.64	64.52	65.80
66.44	67.98	68.87	70.06	70.90	71.16	72.52	72.52	73.53	73.42
73.64	73.54	74.89	74.56	74.63					

GROUP 24

SECTION 7, RUN 4.

NUMBER OF T IS 25

T	T	T	T	T	T	T	T	T	T
51.62	53.67	54.72	56.29	57.21	58.90	59.96	61.38	63.03	63.88
65.29	66.81	67.77	69.29	69.88	70.74	71.21	73.00	72.86	73.27
73.43	74.11	73.28	73.33	74.18					

GROUP 25

SECTION 7, RUN 5.

NUMBER OF T IS 25

T	T	T	T	T	T	T	T	T	T
52.03	53.70	54.75	56.36	57.36	59.17	60.28	61.55	62.83	64.43
66.31	67.09	67.69	68.42	69.96	70.55	70.97	71.65	72.94	72.97
73.43	72.14	73.18	73.71	74.03					

GROUP 26

SECTION 7, RUN 6.

NUMBER OF T IS 25

T	T	T	T	T	T	T	T	T	T
51.59	52.89	53.87	54.92	56.42	58.28	59.01	60.23	61.80	63.08
64.12	65.42	66.94	67.16	68.49	69.03	69.52	70.73	70.52	71.55
71.38	71.78	71.55	71.76	71.28					

GROUP 27

SECTION 7, RUN 7.

NUMBER OF T IS 25

T	T	T	T	T	T	T	T	T	T
51.60	52.87	54.11	55.56	56.68	57.88	59.76	60.75	62.00	63.41
64.33	66.15	67.15	68.40	68.38	69.07	70.58	71.11	71.77	72.44
72.08	72.09	71.73	72.71	72.51					

GROUP 28

SECTION 7, RUN 8.

NUMBER OF T IS 25

T	T	T	T	T	T	T	T	T	T
51.70	52.98	54.19	55.27	57.20	58.25	59.66	60.90	61.98	63.76
65.14	66.05	67.07	68.29	68.53	70.17	70.10	70.71	71.28	71.56
72.55	72.38	72.51	71.66	72.09					

GROUP 29

SECTION 7, RUN 9.

NUMBER OF T IS 25

T	T	T	T	T	T	T	T	T	T
51.66	53.12	54.97	56.23	57.02	58.44	60.07	60.63	62.67	63.35
65.38	65.75	66.97	67.89	69.09	69.59	70.59	71.39	72.18	71.23
72.47	72.24	71.93	72.36	72.34					

GROUP 30

SECTION 7, RUN 10.

NUMBER OF T IS 25

T	T	T	T	T	T	T	T	T	T
52.02	53.37	54.71	55.69	56.91	58.27	60.58	61.75	63.15	64.26
64.68	65.95	67.36	68.03	68.36	69.78	71.27	71.11	71.93	72.64
72.62	72.74	72.74	72.71	73.06					

GROUP 31

SECTION 8, RUN 1, 4 DEG.DIV., 51.5,1.0,64.5, 50K, 10 RUNS.

NUMBER OF T IS 14

73.62	74.13	73.64	73.08	72.47	71.59	70.24	69.06	68.07	66.69
65.37	64.09	63.03	61.38						

GROUP 32

SECTION 8, RUN 2.

NUMBER OF T IS 14

71.65	72.22	71.16	71.63	70.40	69.69	68.99	67.91	66.57	65.33
63.87	62.77	61.22	59.85						

GROUP 33

SECTION 8, RUN 3.

NUMBER OF T IS 14

74.54	73.36	73.59	73.47	73.20	71.98	71.29	70.01	69.21	67.08
66.46	64.94	63.44	61.96						

GROUP 34

SECTION 8, RUN 4.

NUMBER OF T IS 14

73.60	72.96	72.67	72.70	71.53	71.12	70.19	69.57	68.58	66.05
64.99	63.86	61.87	60.68						

GROUP 35

SECTION 8, RUN 5.

NUMBER OF T IS 14

73.20	73.99	73.68	72.82	71.96	71.59	70.27	69.57	68.47	66.68
65.67	63.74	62.19	60.67						

GROUP 36

SECTION 8, RUN 6.

NUMBER OF T IS 14

71.45	71.78	70.87	70.44	70.01	69.52	68.38	67.11	66.57	65.11
63.44	62.37	60.60	58.93						

GROUP 37

SECTION 8, RUN 7.

NUMBER OF T IS 14

73.13	71.94	71.53	70.75	70.99	69.99	69.22	68.42	66.49	65.19
63.74	62.39	60.94	59.54						

GROUP 38

SECTION 8, RUN 8.

NUMBER OF T IS 14

T	T	T	T	T	T	T	T	T	T
72.63	71.92	71.86	71.70	70.48	70.41	69.10	68.30	66.73	65.03
63.85	63.10	60.51	59.58						

GROUP 39

SECTION 8, RUN 9.

NUMBER OF T IS 14

T	T	T	T	T	T	T	T	T	T
72.20	71.66	71.64	71.84	70.40	69.50	68.81	67.12	66.00	65.35
63.69	62.92	61.49	59.50						

GROUP 40

SECTION 8, RUN 10.

NUMBER OF T IS 14

T	T	T	T	T	T	T	T	T	T
72.91	72.52	72.57	71.83	70.74	70.01	70.02	67.88	66.59	65.64
64.04	63.15	61.19	59.70						

SUMMARY OF DATA AND CORRECTIONS BEFORE NORMALIZATION

SECTION 1

NUMBER OF RUNS IS 3

NUMBER OF THETAS IS 24

DELTA THETA .250

THETA MIN 4.000

THETA MAX 9.750

NUMBER OF COUNTS IS 150000.00

BACKGROUND 4.55

CORRECTED FOR POLARIZATION

FACTOR FOR PENETRATION CORRECTION(2*ALPHA*MU) IS .31270

SECTION 2

NUMBER OF RUNS IS 3

NUMBER OF THETAS IS 7

DELTA THETA .500

THETA MIN 10.000

THETA MAX 13.000

NUMBER OF COUNTS IS 150000.00

BACKGROUND 4.55

```
CORRECTED FOR POLARIZATION
FACTOR FOR PENETRATION CORRECTION(2*ALPHA*MU) IS      .31270
                SECTION    3
NUMBER OF RUNS IS   4
NUMBER OF THETAS IS  26
DELTA THETA   .500
THETA MIN 10.000
THETA MAX 22.500
NUMBER OF COUNTS IS  200000.00
BACKGROUND  3.20
CORRECTED FOR POLARIZATION
FACTOR FOR PENETRATION CORRECTION(2*ALPHA*MU) IS      .62540
                SECTION    4
NUMBER OF RUNS IS   4
NUMBER OF THETAS IS   3
DELTA THETA   .500
THETA MIN 23.000
THETA MAX 24.000
NUMBER OF COUNTS IS  200000.00
BACKGROUND  3.20
CORRECTED FOR POLARIZATION
FACTOR FOR PENETRATION CORRECTION(2*ALPHA*MU) IS      .62540
                SECTION    5
NUMBER OF RUNS IS  10
NUMBER OF THETAS IS  31
DELTA THETA   .500
THETA MIN 23.000
THETA MAX 38.000
NUMBER OF COUNTS IS  500000.00
BACKGROUND  2.47
CORRECTED FOR POLARIZATION
FACTOR FOR PENETRATION CORRECTION(2*ALPHA*MU) IS     1.25080
                SECTION    6
NUMBER OF RUNS IS  10
NUMBER OF THETAS IS   3
DELTA THETA   .500
```

```
THETA MIN 38.500
THETA MAX 39.500
NUMBER OF COUNTS IS  500000.00
BACKGROUND  2.47
CORRECTED FOR POLARIZATION
FACTOR FOR PENETRATION CORRECTION(2*ALPHA*MU) IS     1.25080
                SECTION     7
NUMBER OF RUNS IS  10
NUMBER OF THETAS IS  25
DELTA THETA    .500
THETA MIN 38.500
THETA MAX 50.500
NUMBER OF COUNTS IS  500000.00
BACKGROUND  5.00
CORRECTED FOR POLARIZATION
FACTOR FOR PENETRATION CORRECTION(2*ALPHA*MU) IS     2.50160
                SECTION     8
NUMBER OF RUNS IS  10
NUMBER OF THETAS IS  14
DELTA THETA   1.000
THETA MIN 51.500
THETA MAX 64.500
NUMBER OF COUNTS IS  500000.00
BACKGROUND  2.80
CORRECTED FOR POLARIZATION
FACTOR FOR PENETRATION CORRECTION(2*ALPHA*MU) IS     2.50160


                    NORMALIZATION
NUMBER OF SECTIONS NORMALIZED TO SUCCEEDING SECTIONS IS    2
NUMBER OF SECTIONS REQUIRING NO NORMALIZATION IS    1
NUMBER OF SECTIONS NORMALIZED TO PRECEDING SECTIONS IS    1
        NORMALIZATION TO SUCCEEDING SECTIONS
                SECTION     1
NUMBER OF THETAS IS   31
NUMBER OF OVERLAP POINTS WITH FOLLOWING SECTION     7
```

H_2O at 75°C

NUMBER OF OVERLAP POINTS WITH PRECEDING SECTION IS 0

R IS 2.17342

SECTION 2

NUMBER OF THETAS IS 29

NUMBER OF OVERLAP POINTS WITH FOLLOWING SECTION 3

NUMBER OF OVERLAP POINTS WITH PRECEDING SECTION IS 7

R IS 1.87967

SECTIONS WITH NO NORMALIZATION

SECTION 1

NUMBER OF THETAS IS 34

NUMBER OF OVERLAP POINTS WITH FOLLOWING SECTION 3

NUMBER OF OVERLAP POINTS WITH PRECEDING SECTION IS 3

NORMALIZATION TO PRECEDING SECTIONS

SECTION 1

NUMBER OF THETAS IS 39

NUMBER OF OVERLAP POINTS WITH FOLLOWING SECTION 0

NUMBER OF OVERLAP POINTS WITH PRECEDING SECTION IS 3

R IS .59341

S	DI	THETA	ERROR
1.233	11839.49	4.00	31.8541
1.310	12771.57	4.25	8.4212
1.387	15009.74	4.50	9.9098
1.464	17472.90	4.75	11.5517
1.541	20704.27	5.00	13.7075
1.618	24069.02	5.25	15.9592
1.695	28358.08	5.50	18.8327
1.771	32995.42	5.75	21.9485
1.848	37375.27	6.00	24.9047
1.925	40778.94	6.25	27.2214
2.002	41719.83	6.50	27.9014
2.078	41521.45	6.75	27.8224
2.155	40538.06	7.00	27.2180
2.231	39838.53	7.25	26.8039
2.308	37345.19	7.50	25.1803
2.384	34747.49	7.75	23.4808
2.461	33584.17	8.00	22.7467
2.537	31809.30	8.25	21.5954
2.614	30693.44	8.50	20.8885
2.690	29550.31	8.75	20.1608
2.766	27941.75	9.00	19.1124
2.842	26541.49	9.25	18.2028
2.918	24545.48	9.50	16.8793
2.994	22637.50	9.75	15.6105
3.070	19835.55	10.00	24.9338
3.222	15902.11	10.50	20.3270
3.374	13206.57	11.00	17.2083
3.525	11604.14	11.50	15.3798
3.676	10825.38	12.00	14.5675
3.827	10456.29	12.50	14.3172

H_2O at 75°C

S	DI	THETA	ERROR
3.978	10270.93	13.00	14.3250
4.128	10438.37	13.50	14.2381
4.278	10383.25	14.00	14.2726
4.427	10113.13	14.50	14.0123
4.576	9837.19	15.00	13.7422
4.725	9422.60	15.50	13.2746
4.874	8823.15	16.00	12.5384
5.022	8220.98	16.50	11.7870
5.170	7696.39	17.00	11.1359
5.317	7135.53	17.50	10.4212
5.464	6584.21	18.00	9.7082
5.610	6156.32	18.50	9.1662
5.757	5790.39	19.00	8.7075
5.902	5500.29	19.50	8.3554
6.047	5290.72	20.00	8.1204
6.192	5127.65	20.50	7.9530
6.337	4984.72	21.00	7.8140
6.480	4858.65	21.50	7.6991
6.624	4717.75	22.00	7.5581
6.766	4622.31	22.50	7.4876
6.909	4462.92	23.00	8.6974
7.051	4293.03	23.50	8.4565
7.192	4112.88	24.00	8.1868
7.332	3926.42	24.50	7.9127
7.473	3739.48	25.00	7.6238
7.612	3542.56	25.50	7.3069
7.751	3378.36	26.00	7.0502
7.890	3217.35	26.50	6.7934
8.027	3066.87	27.00	6.5522
8.164	2959.91	27.50	6.3984
8.301	2842.67	28.00	6.2176
8.437	2757.89	28.50	6.1032
8.572	2687.28	29.00	6.0168
8.707	2617.81	29.50	5.9297
8.841	2561.12	30.00	5.8685
8.974	2490.81	30.50	5.7730
9.107	2438.04	31.00	5.7149
9.239	2379.58	31.50	5.6406
9.370	2312.97	32.00	5.5434
9.500	2247.56	32.50	5.4453
9.630	2187.43	33.00	5.3563
9.759	2119.48	33.50	5.2442
9.887	2051.91	34.00	5.1289
10.015	1992.95	34.50	5.0311
10.142	1936.10	35.00	4.9349
10.268	1879.50	35.50	4.8355
10.393	1840.24	36.00	4.7773
10.517	1793.87	36.50	4.6974
10.641	1761.60	37.00	4.6513
10.764	1734.22	37.50	4.6153
10.886	1705.88	38.00	4.5740
11.007	1680.89	38.50	4.5498
11.127	1658.24	39.00	4.5022
11.247	1633.82	39.50	4.4633
11.366	1601.90	40.00	4.4063
11.483	1579.61	40.50	4.3676
11.600	1551.53	41.00	4.3101
11.716	1521.28	41.50	4.2437
11.831	1500.23	42.00	4.2003
11.946	1471.46	42.50	4.1325
12.059	1446.63	43.00	4.0731
12.171	1422.41	43.50	4.0129
12.283	1400.72	44.00	3.9573
12.393	1378.69	44.50	3.8984
12.503	1362.78	45.00	3.8545
12.611	1343.73	45.50	3.7996
12.719	1327.98	46.00	3.7518
12.826	1312.10	46.50	3.7017
12.932	1294.85	47.00	3.6458
13.036	1279.62	47.50	3.5937

H_2O at 75°C

S	DI	THETA	ERROR
13.140	1271.56	48.00	3.5600
13.243	1259.36	48.50	3.5131
13.345	1253.56	49.00	3.4824
13.445	1243.45	49.50	3.4381
13.545	1233.28	50.00	3.3923
13.644	1222.95	50.50	3.3449
13.838	1208.71	51.50	3.2639
14.028	1190.70	52.50	3.1688
14.214	1171.77	53.50	3.0684
14.395	1150.33	54.50	2.9595
14.572	1135.38	55.50	2.8662
14.744	1116.83	56.50	2.7633
14.913	1100.36	57.50	2.6659
15.076	1087.12	58.50	2.5769
15.235	1072.95	59.50	2.4868
15.389	1064.43	60.50	2.4111
15.539	1051.90	61.50	2.3279
15.684	1037.17	62.50	2.2420
15.824	1030.86	63.50	2.1766
15.959	1021.23	64.50	2.1064

NUMBER OF POINTS IS 120

H_2O at 75°C

DATA FOR H_2O at 100°C

GROUP 1

SECTION 1, RUN 1, 172 DEG.DIV., 4.0,0.25,9.75, 50K, 3 RUNS.

NUMBER OF T IS 24

T	T	T	T	T	T	T	T	T	T
32.19	29.69	26.24	23.19	20.47	18.26	15.81	14.36	13.04	12.32
11.76	11.91	12.41	12.99	13.82	15.90	17.43	18.86	20.26	21.47
22.84	24.73	26.35	28.78						

GROUP 2

SECTION 1, RUN 2.

NUMBER OF T IS 24

T	T	T	T	T	T	T	T	T	T
32.10	30.64	27.56	25.93	22.57	20.70	17.82	15.84	14.53	13.45
13.30	13.24	13.46	14.02	15.04	16.38	17.59	19.16	19.77	21.31
22.77	23.91	26.06	29.15						

GROUP 3

SECTION 1, RUN 3.

NUMBER OF T IS 24

T	T	T	T	T	T	T	T	T	T
34.58	32.24	29.10	25.69	22.08	20.58	17.61	15.99	14.34	14.83
14.34	14.74	15.67	16.44	17.31	18.71	19.90	21.16	21.53	23.08
24.50	26.60	28.63	31.83						

GROUP 4

SECTION 2, RUNS 1,2,3, 112 DEG.DIV.;10.0,0.5,13.0, 50K, 3 RUNS.

NUMBER OF T IS 21

T	T	T	T	T	T	T	T	T	T
31.81	41.38	49.52	60.76	54.44	65.92	67.00	33.49	40.59	48.97
54.14	60.65	64.22	69.91	35.33	45.00	53.41	59.82	65.84	69.76
71.73									

GROUP 5

SECTION 3, RUN 1, 1 DEG.DIV., 10.0,0.5,22.5, 50K, 4 RUNS.

NUMBER OF T IS 26

T	T	T	T	T	T	T	T	T	T
11.81	14.65	17.59	20.58	22.55	24.09	24.72	25.09	25.98	26.97
28.64	31.14	33.12	35.79	38.72	42.29	46.68	49.80	53.94	57.26
60.17	64.24	66.65	72.58	76.15	80.83				

GROUP 6

SECTION 3, RUN 2.

NUMBER OF T IS 26

T	T	T	T	T	T	T	T	T	T
11.66	14.62	17.57	20.13	21.67	23.07	23.69	24.38	25.52	26.80
28.46	30.21	33.00	36.23	39.29	42.41	46.57	49.64	53.44	56.67
58.21	61.36	63.63	69.09	76.00	79.10				

GROUP 7

SECTION 3, RUN 3.

NUMBER OF T IS 26

T	T	T	T	T	T	T	T	T	T
11.96	14.74	17.49	20.45	21.80	23.07	23.54	24.59	25.42	26.44
28.37	30.66	32.99	35.73	38.86	42.11	46.50	49.08	52.32	55.78
58.87	62.24	64.49	67.92	71.12	75.79				

GROUP 8

SECTION 3, RUN 4.

NUMBER OF T IS 26

T	T	T	T	T	T	T	T	T	T
11.45	14.20	17.25	19.36	20.94	22.12	22.81	23.44	24.20	25.37
26.63	28.85	31.14	33.74	36.42	40.91	43.60	47.24	50.74	53.52
56.25	58.74	61.41	65.42	70.11	74.02				

GROUP 9

SECTION 4, RUNS 1,2,3,4, 1DEG.DIV., 23.0,0.5,24.0, 50K, 4 RUNS.

NUMBER OF T IS 12

T	T	T	T	T	T	T	T	T	T
85.97	89.17	94.69	86.66	90.84	94.76	80.47	83.82	89.21	78.64
85.05	89.93								

GROUP 10

SECTION 5, RUN 1. 2 DEG.DIV., 23.0,0.5,38.0, 50K, 10 RUNS.

NUMBER OF T IS 31

T	T	T	T	T	T	T	T	T	T
29.92	31.24	33.43	35.45	37.41	40.49	42.85	46.06	48.32	51.78
54.66	57.99	61.57	64.63	68.53	73.05	76.43	80.85	84.27	88.42
93.48	99.05	103.68	107.25	112.65	117.64	123.93	128.57	132.42	135.96
140.04									

GROUP 11

SECTION 5, RUN 2.

NUMBER OF T IS 31

T	T	T	T	T	T	T	T	T	T
30.36	32.27	33.93	36.38	38.55	40.81	43.94	46.89	50.23	52.82
55.74	59.13	61.46	65.48	68.37	71.20	74.70	80.28	84.42	88.64
94.16	97.53	102.40	108.41	113.17	118.04	122.29	126.63	131.01	135.17
138.32									

GROUP 12

SECTION 5, RUN 3.

NUMBER OF T IS 31

T	T	T	T	T	T	T	T	T	T
30.77	32.81	34.46	36.47	39.45	41.61	44.92	47.82	51.39	54.37
56.81	60.83	63.52	66.87	70.47	73.05	77.38	80.92	86.20	91.89
94.24	99.54	105.63	109.87	115.73	122.00	127.34	130.93	138.55	141.44
145.55									

GROUP 13

SECTION 5, RUN 4.

NUMBER OF T IS 31

T	T	T	T	T	T	T	T	T	T
30.73	32.30	34.16	36.37	38.61	41.64	44.14	47.47	50.04	53.64
57.09	60.38	64.02	67.80	70.50	74.06	77.56	82.02	86.32	91.54
95.04	99.51	104.81	111.41	115.36	120.27	125.34	130.39	135.06	139.81
145.06									

GROUP 14

SECTION 5, RUN 5.

NUMBER OF T IS 31

T	T	T	T	T	T	T	T	T	T
30.81	32.93	34.57	36.72	39.06	41.83	44.48	48.55	52.25	54.51
57.39	60.44	64.11	66.72	70.65	73.47	77.65	81.07	85.31	91.28
94.23	99.60	104.54	109.51	114.24	118.37	124.55	128.44	133.39	138.46
141.45									

GROUP 15

SECTION 5, RUN 6.

NUMBER OF T IS 31

T	T	T	T	T	T	T	T	T	T
30.40	32.16	33.99	36.36	38.92	41.45	44.07	47.37	50.47	53.72
57.27	60.73	64.50	67.53	71.50	75.22	78.52	82.34	86.93	92.01
97.18	100.57	105.86	108.76	115.21	119.96	124.21	129.67	136.51	140.56
146.12									

GROUP 16

SECTION 5, RUN 7.

NUMBER OF T IS 31

T	T	T	T	T	T	T	T	T	T
30.39	31.78	33.84	35.88	37.98	40.70	43.56	46.77	49.48	52.69
55.70	59.14	62.24	65.15	68.23	71.66	75.07	77.54	84.12	89.12
92.30	97.58	102.41	108.24	113.70	118.87	122.59	128.75	133.11	137.22
142.69									

GROUP 17

SECTION 5, RUN 8.

NUMBER OF T IS 31

T	T	T	T	T	T	T	T	T	T
31.04	33.05	35.01	37.32	39.91	42.48	45.58	48.41	51.39	55.38
58.04	61.28	64.86	67.81	70.07	71.60	75.71	79.64	84.90	88.80
92.98	98.61	103.35	109.24	112.84	116.66	122.85	129.08	134.36	138.47
141.91									

GROUP 18

SECTION 5, RUN 9.

NUMBER OF T IS 31

T	T	T	T	T	T	T	T	T	T
30.88	32.34	34.39	36.73	39.24	41.43	44.78	47.90	50.55	54.15
57.12	60.17	62.44	66.29	69.40	73.69	78.68	81.83	84.97	90.05
94.71	99.89	104.92	109.77	115.64	119.73	125.59	131.69	134.84	139.27
143.51									

H_2O at 100°C

GROUP 19

SECTION 5, RUN 10.

NUMBER OF T IS 31

T	T	T	T	T	T	T	T	T	T
30.32	32.11	34.51	36.36	38.70	41.49	43.91	47.54	50.55	53.43
57.00	60.15	63.78	66.61	70.55	73.99	77.76	81.33	85.57	89.68
93.87	98.28	103.91	108.45	114.11	119.80	124.33	129.00	134.31	135.39
142.30									

GROUP 20

SECTION 6, RUNS 1 THROUGH 10, 2 DEG.DIV.,38.5,0.5,39.5, 50K, 10 RUNS.

NUMBER OF T IS 30

T	T	T	T	T	T	T	T	T	T
143.91	148.52	153.27	142.68	148.78	154.21	153.94	157.02	160.58	146.89
150.59	157.62	146.89	152.19	154.26	149.29	152.42	158.46	145.53	147.82
151.28	146.44	151.21	154.62	148.98	152.03	155.28	147.77	150.44	155.08

GROUP 21

SECTION 7, RUN 1, 4 DEG.DIV., 38.5,0.5,50.5, 50K, 10 RUNS.

NUMBER OF T IS 25

T	T	T	T	T	T	T	T	T	T
51.86	53.35	54.39	56.42	57.94	59.01	60.70	62.27	63.39	64.62
65.11	66.86	67.52	69.26	69.82	71.17	71.22	72.78	72.90	72.94
74.34	74.95	74.06	74.57	75.37					

GROUP 22

SECTION 7, RUN 2.

NUMBER OF T IS 25

T	T	T	T	T	T	T	T	T	T
53.95	54.85	56.60	57.97	59.56	59.88	61.79	62.96	64.35	65.35
67.13	68.61	69.72	71.04	71.25	72.39	73.05	73.41	74.20	75.25
75.23	75.55	76.07	75.99	76.07					

GROUP 23

SECTION 7, RUN 3.

NUMBER OF T IS 25

T	T	T	T	T	T	T	T	T	T
52.87	55.21	56.30	57.24	59.33	60.47	62.23	63.41	64.31	65.99
67.08	68.35	69.13	70.49	71.06	72.65	72.97	73.56	74.45	74.73
75.15	74.66	76.11	76.23	75.66					

GROUP 24

SECTION 7, RUN 4.

NUMBER OF T IS 25

T	T	T	T	T	T	T	T	T	T
52.83	54.14	55.72	57.45	59.36	59.69	61.61	62.70	63.90	65.77
66.62	67.87	68.43	69.75	70.71	71.57	72.27	73.56	73.91	75.29
74.67	75.08	75.86	75.41	75.28					

GROUP 25

SECTION 7, RUN 5.

NUMBER OF T IS 25

T	T	T	T	T	T	T	T	T	T
54.14	55.10	56.42	57.54	59.27	60.43	63.04	63.56	64.91	66.31
66.81	68.37	69.63	70.87	70.94	71.89	72.97	73.61	73.83	74.42
75.00	75.39	75.21	75.05	75.72					

GROUP 26

SECTION 7, RUN 6.

NUMBER OF T IS 25

T	T	T	T	T	T	T	T	T	T
53.29	54.37	55.02	57.39	59.01	59.90	61.41	62.10	63.68	65.80
67.03	68.10	69.08	69.55	70.80	71.79	71.72	72.96	73.50	74.20
74.38	74.08	74.78	74.06	74.87					

GROUP 27

SECTION 7, RUN 7.

NUMBER OF T IS 25

T	T	T	T	T	T	T	T	T	T
54.14	55.41	55.98	56.02	59.62	60.53	61.61	62.67	64.24	65.48
66.54	67.70	69.95	70.26	71.26	72.17	72.92	73.33	74.47	74.17
74.83	75.14	75.20	75.26	75.34					

GROUP 28

SECTION 7, RUN 8.

NUMBER OF T IS 25

T	T	T	T	T	T	T	T	T	T
54.13	55.43	56.34	55.49	59.78	61.30	62.25	63.57	65.33	67.08
68.16	69.48	69.83	71.08	72.99	73.65	73.36	74.32	75.19	74.88
75.53	76.13	76.41	76.13	76.04					

GROUP 29

SECTION 7, RUN 9.

NUMBER OF T IS 25

T	T	T	T	T	T	T	T	T	T
54.05	55.66	57.49	58.62	59.72	61.91	62.54	64.07	65.62	66.79
68.02	69.74	70.09	71.54	72.55	73.29	74.64	75.28	75.08	75.14
76.10	76.94	76.31	76.73	76.97					

GROUP 30

SECTION 7, RUN 10.

NUMBER OF T IS 25

T	T	T	T	T	T	T	T	T	T
53.39	54.57	56.24	57.51	58.20	59.99	61.09	62.51	64.13	64.88
66.30	67.53	69.08	69.22	70.98	72.18	73.02	73.30	73.24	73.51
74.63	74.22	74.75	74.86	74.92					

GROUP 31

SECTION 8, RUN 1, 4 DEG.DIV., 51.5,1.0,64.5, 50K, TO RUNS.

NUMBER OF T IS 14

T	T	T	T	T	T	T	T	T	T
74.89	74.20	74.91	73.91	73.18	72.56	70.43	70.18	68.50	66.97
65.99	64.16	62.68	61.35						

GROUP 32

SECTION 8, RUN 2.

NUMBER OF T IS 14

T	T	T	T	T	T	T	T	T	T
75.85	75.67	74.66	74.48	73.52	73.30	71.93	70.26	69.36	67.97
66.63	64.73	63.28	62.13						

GROUP 33

SECTION 8, RUN 3.

NUMBER OF T IS 14

T	T	T	T	T	T	T	T	T	T
75.52	75.58	75.22	74.03	73.88	73.01	71.68	70.90	69.62	67.85
66.08	64.55	63.66	61.70						

GROUP 34

SECTION 8, RUN 4.

NUMBER OF T IS 14

T	T	T	T	T	T	T	T	T	T
74.81	74.93	74.12	73.95	72.83	72.40	71.40	70.35	69.57	67.95
66.16	64.74	62.60	61.51						

GROUP 35

SECTION 8, RUN 5.

NUMBER OF T IS 14

T	T	T	T	T	T	T	T	T	T
75.52	75.04	74.96	74.49	73.23	73.10	70.90	70.40	69.25	67.63
65.97	64.74	63.46	61.86						

GROUP 36

SECTION 8, RUN 6.

NUMBER OF T IS 14

T	T	T	T	T	T	T	T	T	T
74.32	74.54	73.94	73.75	73.37	72.10	70.83	70.52	69.71	67.56
66.48	64.90	63.64	61.50						

GROUP 37

SECTION 8, RUN 7.

NUMBER OF T IS 14

T	T	T	T	T	T	T	T	T	T
75.51	75.29	74.76	75.18	73.40	72.71	71.72	70.60	69.26	68.18
66.65	64.87	63.03	61.97						

GROUP 38

SECTION 8, RUN 8.

NUMBER OF T IS 14

T	T	T	T	T	T	T	T	T	T
75.83	75.98	75.65	74.83	74.28	73.44	72.45	70.93	70.43	68.39
67.12	65.65	64.75	62.42						

GROUP 39

SECTION 8, RUN 9.

NUMBER OF T IS 14

T	T	T	T	T	T	T	T	T	T
76.70	76.31	76.24	75.33	74.62	74.25	72.77	71.46	70.34	69.10
67.56	65.69	64.79	63.51						

GROUP 40

SECTION 8, RUN 10.

NUMBER OF T IS 14

T	T	T	T	T	T	T	T	T	T
75.07	74.76	74.17	73.27	72.39	72.01	70.58	69.99	68.59	67.59
65.65	64.54	63.35	61.89						

SUMMARY OF DATA AND CORRECTIONS BEFORE NORMALIZATION

SECTION 1

NUMBER OF RUNS IS 3

NUMBER OF THETAS IS 24

DELTA THETA .250

THETA MIN 4.000

THETA MAX 9.750

NUMBER OF COUNTS IS 150000.00

BACKGROUND 2.59

CORRECTED FOR POLARIZATION

FACTOR FOR PENETRATION CORRECTION(2*ALPHA*MU) IS .30740

SECTION 2

NUMBER OF RUNS IS 3

NUMBER OF THETAS IS 7

DELTA THETA .500

THETA MIN 10.000

THETA MAX 13.000

NUMBER OF COUNTS IS 150000.00

BACKGROUND 2.59

H_2O at 100°C

CORRECTED FOR POLARIZATION

FACTOR FOR PENETRATION CORRECTION(2*ALPHA*MU) IS .30740

SECTION 3

NUMBER OF RUNS IS 4

NUMBER OF THETAS IS 26

DELTA THETA .500

THETA MIN 10.000

THETA MAX 22.500

NUMBER OF COUNTS IS 200000.00

BACKGROUND 3.82

CORRECTED FOR POLARIZATION

FACTOR FOR PENETRATION CORRECTION(2*ALPHA*MU) IS .61480

SECTION 4

NUMBER OF RUNS IS 4

NUMBER OF THETAS IS 3

DELTA THETA .500

THETA MIN 23.000

THETA MAX 24.000

NUMBER OF COUNTS IS 200000.00

BACKGROUND 3.82

CORRECTED FOR POLARIZATION

FACTOR FOR PENETRATION CORRECTION(2*ALPHA*MU) IS .61480

SECTION 5

NUMBER OF RUNS IS 10

NUMBER OF THETAS IS 31

DELTA THETA .500

THETA MIN 23.000

THETA MAX 38.000

NUMBER OF COUNTS IS 500000.00

BACKGROUND 2.55

CORRECTED FOR POLARIZATION

FACTOR FOR PENETRATION CORRECTION(2*ALPHA*MU) IS 1.22960

SECTION 6

NUMBER OF RUNS IS 10

NUMBER OF THETAS IS 3

DELTA THETA .500

THETA MIN 38.500

THETA MAX 39.500

NUMBER OF COUNTS IS 500000.00

BACKGROUND 2.55

CORRECTED FOR POLARIZATION

FACTOR FOR PENETRATION CORRECTION(2*ALPHA*MU) IS 1.22960

SECTION 7

NUMBER OF RINGS IS 10

NUMBER OF THETAS IS 25

DELTA THETA .500

THETA MIN 38.500

THETA MAX 50.500

NUMBER OF COUNTS IS 500000.00

BACKGROUND 5.05

CORRECTED FOR POLARIZATION

FACTOR FOR PENETRATION CORRECTION(2*ALPHA*MU) IS 2.45920

SECTION 8

NUMBER OF RINGS IS 10

NUMBER OF THETAS IS 14

DELTA THETA 1.000

THETA MIN 51.500

THETA MAX 64.500

NUMBER OF COUNTS IS 500000.00

BACKGROUND 2.05

CORRECTED FOR POLARIZATION

FACTOR FOR PENETRATION CORRECTION(2*ALPHA*MU) IS 2.45920

NORMALIZATION

NUMBER OF SECTIONS NORMALIZED TO SUCCEEDING SECTIONS IS 2

NUMBER OF SECTIONS REQUIRING NO NORMALIZATION IS 1

NUMBER OF SECTIONS NORMALIZED TO PRECEDING SECTIONS IS 1

NORMALIZATION TO SUCCEEDING SECTIONS

SECTION 1

NUMBER OF THETAS IS 31

NUMBER OF OVERLAP POINTS WITH FOLLOWING SECTION

H_2O at 100°C

NUMBER OF OVERLAP POINTS WITH PRECEDING SECTION IS 0

R IS 1.79859

SECTION 2

NUMBER OF THETAS IS 29

NUMBER OF OVERLAP POINTS WITH FOLLOWING SECTION 3

NUMBER OF OVERLAP POINTS WITH PRECEDING SECTION IS 7

R IS 1.70372

SECTIONS WITH NO NORMALIZATION

SECTION 1

NUMBER OF THETAS IS 34

NUMBER OF OVERLAP POINTS WITH FOLLOWING SECTION 3

NUMBER OF OVERLAP POINTS WITH PRECEDING SECTION IS 3

NORMALIZATION TO PRECEDING SECTIONS

SECTION 1

NUMBER OF THETAS IS 39

NUMBER OF OVERLAP POINTS WITH FOLLOWING SECTION 0

NUMBER OF OVERLAP POINTS WITH PRECEDING SECTION IS 3

R IS .53208

S	DI	THETA	ERROR
1.233	8100.85	4.00	21.7953
1.310	8928.84	4.25	7.8491
1.387	10283.53	4.50	9.0516
1.464	11746.12	4.75	10.3530
1.541	13901.10	5.00	12.2700
1.618	15652.32	5.25	13.8365
1.695	18714.28	5.50	16.5693
1.771	21348.25	5.75	18.9325
1.848	24181.27	6.00	21.4618
1.925	25639.35	6.25	22.8179
2.002	27123.88	6.50	24.1840
2.078	27409.92	6.75	24.5578
2.155	27073.63	7.00	24.2345
2.231	26533.76	7.25	23.8006

S	DI	THETA	ERROR
2.308	25586.31	7.50	23.0000
2.384	23728.07	7.75	21.3770
2.461	22554.16	8.00	20.3659
2.537	21420.01	8.25	19.3675
2.614	21066.09	8.50	19.1135
2.690	20136.16	8.75	18.3154
2.766	19336.73	9.00	17.6335
2.842	18413.07	9.25	16.8356
2.918	17463.93	9.50	16.0110
2.994	16283.23	9.75	14.9700
3.070	14744.95	10.00	21.2944
3.222	12214.42	10.50	17.8121
3.374	10558.48	11.00	15.4055
3.525	9496.03	11.50	13.6636

H_2O at 100°C

S	DI	THETA	ERROR
3.676	9044.74	12.00	13.3464
3.827	8870.78	12.50	13.0457
3.978	8946.24	13.00	13.1966
4.128	8845.20	13.50	13.3109
4.278	8773.25	14.00	13.3049
4.427	8657.63	14.50	13.2345
4.576	8389.98	15.00	12.9310
4.725	8010.63	15.50	12.4509
4.874	7836.39	16.00	11.9726
5.022	7225.45	16.50	11.4295
5.170	6852.76	17.00	10.9393
5.317	6433.28	17.50	10.3659
5.464	6042.81	18.00	9.8301
5.610	5810.35	18.50	9.5445
5.757	5533.88	19.00	9.1812
5.902	5341.40	19.50	8.9520
6.047	5261.86	20.00	8.9101
6.192	5109.72	20.50	8.7436
6.337	5042.58	21.00	8.7211
6.480	4813.94	21.50	8.4160
6.624	4623.37	22.00	8.1718
6.766	4485.73	22.50	8.0168
6.909	4303.55	23.00	8.4100
7.051	4173.37	23.50	8.2170
7.192	4031.39	24.00	8.0059
7.332	3956.48	24.50	7.7718
7.473	3803.95	25.00	7.5309
7.612	3531.13	25.50	7.2833
7.751	3371.42	26.00	7.0357
7.890	3202.51	26.50	6.7621
8.027	3067.65	27.00	6.5539
8.164	2945.68	27.50	6.3677
8.301	2841.37	28.00	6.2147
8.437	2734.18	28.50	6.0508
8.572	2642.45	29.00	5.9164
8.707	2559.65	29.50	5.7979
8.841	2481.03	30.00	5.6850
8.974	2411.74	30.50	5.5897
9.107	2330.67	31.00	5.4633
9.239	2257.45	31.50	5.3511
9.370	2171.76	32.00	5.2049
9.500	2089.28	32.50	5.0618
9.630	2030.17	33.00	4.9712
9.759	1962.30	33.50	4.8553
9.887	1891.73	34.00	4.7285
10.015	1831.78	34.50	4.6243
10.142	1772.78	35.00	4.5186
10.268	1722.74	35.50	4.4322
10.393	1671.95	36.00	4.3404
10.517	1626.53	36.50	4.2592
10.641	1582.76	37.00	4.1791
10.764	1554.29	37.50	4.1364
10.886	1522.75	38.00	4.0829
11.007	1488.48	38.50	4.0151
11.127	1463.70	39.00	3.9753
11.247	1438.22	39.50	3.9412
11.366	1410.45	40.00	3.8797
11.483	1383.13	40.50	3.8244
11.600	1365.00	41.00	3.7920
11.716	1338.28	41.50	3.7332
11.831	1319.58	42.00	3.6944
11.946	1294.38	42.50	3.6352
12.059	1271.45	43.00	3.5799
12.171	1254.02	43.50	3.5378
12.283	1230.65	44.00	3.4768
12.393	1214.31	44.50	3.4336
12.503	1196.30	45.00	3.3837
12.611	1180.15	45.50	3.3370
12.719	1167.83	46.00	3.2824
12.826	1151.12	46.50	3.2475

H_2O at 100°C

S	DI	THETA	ERROR
12.932	1135.76	47.00	3.1978
13.036	1125.14	47.50	3.1599
13.140	1114.95	48.00	3.1216
13.243	1101.95	48.50	3.0740
13.345	1092.88	49.00	3.0360
13.445	1082.66	49.50	2.9935
13.545	1076.33	50.00	2.9606
13.644	1065.90	50.50	2.9153
13.838	1056.77	51.50	2.8536
14.028	1039.84	52.50	2.7673
14.214	1023.63	53.50	2.6805
14.395	1008.03	54.50	2.5934

S	DI	THETA	ERROR
14.572	995.09	55.50	2.5121
14.744	977.16	56.50	2.4178
14.913	969.42	57.50	2.3487
15.076	953.89	58.50	2.2611
15.235	940.02	59.50	2.1787
15.389	932.08	60.50	2.1113
15.539	923.02	61.50	2.0426
15.684	914.97	62.50	1.9779
15.824	903.62	63.50	1.9080
15.959	896.14	64.50	1.8484

NUMBER OF POINTS IS 120

H_2O at 100°C

DATA FOR H_2O at 150°C

GROUP 1

SECTION 1, RUN 1, 0.5 DEG.DIV., 4.0,0.25,9.75, 50K, 3 RUNS,

NUMBER OF T IS 24

T	T	T	T	T	T	T	T	T	T
32.32	29.65	27.08	24.50	22.87	20.46	17.70	17.90	16.51	15.97
15.42	14.27	14.40	17.11	17.65	18.71	19.24	19.83	20.80	22.80
26.20	29.32	31.56	35.68						

GROUP 2

SECTION 1, RUN 2,

NUMBER OF T IS 24

T	T	T	T	T	T	T	T	T	T
30.59	29.53	26.26	22.72	21.78	19.65	16.74	14.91	13.62	13.09
12.55	12.02	12.49	12.67	12.96	13.61	15.69	17.65	19.40	22.91
26.42	27.34	28.74	30.86						

GROUP 3

SECTION 1, RUN 3,

NUMBER OF T IS 24

T	T	T	T	T	T	T	T	T	T
30.82	29.37	28.14	27.28	23.21	20.68	19.92	18.44	16.51	15.87
14.27	13.93	15.57	14.25	16.29	17.94	19.58	21.34	22.98	24.98
25.76	27.21	31.99	37.27						

GROUP 4

SECTION 2, RUNS 1,2,3, 0.5 DEG.DIV.,10.0,0.5,13.0, 50K, 3 RUNS,

NUMBER OF T IS 21

T	T	T	T	T	T	T	T	T	T
38.95	46.09	53.99	65.83	71.77	77.20	84.54	32.81	39.48	51.24
59.48	67.17	71.59	70.83	38.53	47.92	56.91	65.47	74.81	77.90
79.68									

GROUP 5

SECTION 3, RUN1, 1 DEG.DIV.,10.0,0.5,22.5, 50K, 4 RUNS,

NUMBER OF T IS 26

T	T	T	T	T	T	T	T	T	T
12.67	15.71	17.90	19.76	21.96	22.60	23.50	23.88	25.74	27.22
30.05	31.79	35.35	37.16	39.20	42.54	45.46	50.04	54.89	57.16
60.01	62.32	64.10	64.33	68.87	71.93				

GROUP 6

SECTION 3, RUN 2,

NUMBER OF T IS 26

T	T	T	T	T	T	T	T	T	T
14.42	16.58	19.63	22.30	24.12	25.91	26.04	26.52	29.03	29.77
31.64	33.40	35.97	39.64	44.09	46.65	49.41	53.30	59.52	63.32
66.00	68.55	73.01	75.87	82.96	84.56				

GROUP 7

SECTION 3, RUN 3,

NUMBER OF T IS 26

T	T	T	T	T	T	T	T	T	T
13.36	15.87	19.20	21.38	22.47	24.96	25.89	27.01	28.28	29.64
30.99	33.06	35.85	39.31	41.90	46.43	48.92	54.68	58.31	63.35
67.20	70.31	71.85	73.96	79.15	81.08				

GROUP 8

SECTION 3, RUN 4,

NUMBER OF T IS 26

T	T	T	T	T	T	T	T	T	T
13.12	16.31	19.13	20.31	22.09	23.04	23.76	24.35	26.33	27.64
31.76	33.65	35.50	37.73	41.17	46.30	50.45	52.82	57.40	58.29
61.74	65.99	67.23	74.02	77.77	80.00				

GROUP 9

SECTION 4, RUNS 1,2,3,4, 1 DEG.DIV., 23.0,0.5,24.0, 50K, 4 RUNS,

NUMBER OF T IS 12

T	T	T	T	T	T	T	T	T	T
76.16	80.94	85.00	88.89	90.68	100.14	90.76	95.23	99.98	86.04
87.00	94.24								

GROUP 10

SECTION 5, RUN 1, 2 DEG.DIV., 23.0,0.5,37.0, 50K, 10 RUNS,

NUMBER OF T IS 29

T	T	T	T	T	T	T	T	T	T
33.28	34.60	37.50	40.06	42.60	44.82	47.17	51.48	55.73	58.33
62.23	65.51	67.63	72.10	74.96	79.72	83.39	87.35	93.59	96.90
104.72	109.16	114.15	117.43	121.56	129.49	135.23	140.28	141.40	

GROUP 11

SECTION 5, RUN 2,

NUMBER OF T IS 29

T	T	T	T	T	T	T	T	T	T
32.99	34.47	36.81	38.92	42.07	44.62	47.84	51.21	54.23	57.54
59.09	64.46	68.79	71.78	73.68	78.13	83.85	87.79	92.18	97.78
102.64	106.95	112.04	117.03	123.07	126.15	131.44	137.76	143.22	

GROUP 12

SECTION 5, RUN 3,

NUMBER OF T IS 29

T	T	T	T	T	T	T	T	T	T
32.92	34.37	37.19	40.15	42.53	45.48	48.13	50.76	54.91	57.57
60.53	65.36	66.63	70.80	76.12	78.76	83.08	87.28	92.48	96.63
102.16	106.85	112.17	117.87	121.89	126.97	133.15	139.74	145.37	

GROUP 13

SECTION 5, RUN 4.

NUMBER OF T IS 29

T	T	T	T	T	T	T	T	T	T
33.13	36.58	38.61	40.57	41.83	47.27	49.60	52.68	54.78	59.57
62.32	65.33	69.98	73.53	77.75	84.01	84.93	89.12	95.96	97.48
104.20	110.01	114.44	121.44	127.58	129.91	137.05	143.72	146.91	

GROUP 14

SECTION 5, RUN 5.

NUMBER OF T IS 29

T	T	T	T	T	T	T	T	T	T
33.11	34.59	37.24	39.99	41.88	45.67	47.39	51.14	53.93	57.72
60.35	63.94	68.65	70.73	76.78	78.49	84.29	89.46	93.31	96.66
104.48	109.88	111.95	117.83	123.02	128.45	133.91	139.33	143.23	

GROUP 15

SECTION 5, RUN 6.

NUMBER OF T IS 29

T	T	T	T	T	T	T	T	T	T
33.11	35.20	41.05	41.50	43.10	45.39	48.92	50.86	54.67	57.50
61.06	64.19	67.43	72.55	76.55	79.25	84.44	87.94	93.46	97.92
102.77	110.47	114.65	119.32	124.02	128.75	134.22	142.19	142.36	

GROUP 16

SECTION 5, RUN 7.

NUMBER OF T IS 29

T	T	T	T	T	T	T	T	T	T
34.23	36.61	39.28	43.22	45.30	48.93	51.34	54.92	56.43	61.91
63.79	68.94	71.72	74.59	80.43	84.89	91.43	91.12	98.43	104.14
106.84	115.30	119.92	125.42	131.83	136.54	140.56	147.51	152.42	

GROUP 17

SECTION 5, RUN 8.

NUMBER OF T IS 29

T	T	T	T	T	T	T	T	T	T
34.20	37.54	38.52	40.44	42.92	46.90	48.44	53.83	58.20	59.78
63.01	68.40	70.35	74.55	78.36	82.56	87.10	91.66	96.96	104.21
107.36	111.74	117.90	122.76	130.38	134.96	139.25	147.49	151.39	

GROUP 18

SECTION 5, RUN 9.

NUMBER OF T IS 29

T	T	T	T	T	T	T	T	T	T
34.00	36.12	38.08	38.98	42.56	47.28	49.33	52.05	55.91	60.26
63.64	67.30	69.62	75.88	79.01	81.96	87.84	93.26	94.10	99.58
106.99	110.61	117.75	121.90	127.00	134.89	137.63	142.75	151.50	

GROUP 19

SECTION 5, RUN 10,

NUMBER OF T IS 29

T	T	T	T	T	T	T	T	T	T
34.00	35.57	39.82	42.30	43.61	47.00	49.64	54.40	57.51	61.02
63.06	67.72	73.01	75.47	79.18	84.04	88.17	94.61	96.71	103.11
108.65	113.41	118.97	124.84	133.55	137.13	141.64	148.01	153.98	

GROUP 20

SECTION 6, RUNS 1-10, 2 DEG.DIV., 37.5,0.5,38.5, 50K, 10 RUNS,

NUMBER OF T IS 30

T	T	T	T	T	T	T	T	T	T
151.53	154.01	159.96	144.12	149.59	152.85	149.08	153.79	157.39	152.30
159.10	160.02	149.96	154.71	160.02	148.28	152.99	158.64	157.99	164.87
167.48	158.73	157.98	166.15	154.11	158.54	163.56	158.69	164.15	168.22

GROUP 21

SECTION 7, RUN 1, 4 DEG.DIV., 37.5,0.5,49.5, 50K, 10 RUNS,

NUMBER OF T IS 25

T	T	T	T	T	T	T	T	T	T
54.06	56.68	58.17	59.39	61.60	63.71	64.65	65.54	67.23	68.57
70.01	71.55	73.58	74.07	74.87	76.30	77.14	78.01	79.46	80.04
80.49	80.62	80.58	80.36	81.56					

GROUP 22

SECTION 7, RUN 2,

NUMBER OF T IS 25

T	T	T	T	T	T	T	T	T	T
56.21	57.93	59.19	60.99	62.96	64.75	65.79	67.36	69.82	69.51
72.02	73.51	74.15	75.87	77.75	77.92	79.70	79.95	80.87	81.68
82.38	82.35	83.56	83.03	83.84					

GROUP 23

SECTION 7, RUN 3,

NUMBER OF T IS 25

T	T	T	T	T	T	T	T	T	T
55.68	57.29	59.46	60.65	62.09	63.67	64.92	66.87	68.43	69.72
71.07	72.17	74.22	74.49	75.94	76.37	78.38	79.17	79.75	80.45
80.51	81.61	81.31	81.99	82.78					

GROUP 24

SECTION 7, RUN 4,

NUMBER OF T IS 25

T	T	T	T	T	T	T	T	T	T
54.70	56.63	58.25	60.19	61.21	63.54	63.86	65.83	67.35	68.54
70.35	71.34	72.79	74.08	75.06	76.03	77.18	78.05	78.75	79.06
79.80	80.79	80.03	81.57	81.29					

GROUP 25

SECTION 7, RUN 5,

NUMBER OF T IS 25

T	T	T	T	T	T	T	T	T	T
57.36	59.33	60.29	62.54	64.03	65.15	67.99	68.33	70.15	72.43
73.26	74.86	76.81	77.92	78.65	79.96	81.67	81.76	81.95	83.13
83.40	84.58	84.72	85.28	85.55					

GROUP 26

SECTION 7, RUN 6,

NUMBER OF T IS 25

T	T	T	T	T	T	T	T	T	T
56.68	58.35	60.58	62.35	63.65	65.61	66.40	68.65	69.99	71.13
72.67	75.01	76.12	76.95	78.72	78.88	80.25	81.99	82.33	82.92
82.83	84.32	84.75	84.62	84.54					

GROUP 27

SECTION 7, RUN 7,

NUMBER OF T IS 25

T	T	T	T	T	T	T	T	T	T
57.24	59.14	60.90	62.36	63.81	65.50	67.18	68.51	70.14	71.53
73.14	74.37	75.84	77.34	78.20	79.59	80.75	81.04	82.99	82.88
84.17	83.69	84.56	85.34	84.83					

GROUP 28

SECTION 7, RUN 8,

NUMBER OF T IS 25

T	T	T	T	T	T	T	T	T	T
58.08	60.13	61.92	63.35	64.93	66.94	69.18	70.02	72.22	73.19
74.22	75.76	77.13	78.38	79.45	80.71	81.46	82.31	83.49	83.89
85.25	84.80	85.57	85.45	86.09					

GROUP 29

SECTION 7, RUN 9,

NUMBER OF T IS 25

T	T	T	T	T	T	T	T	T	T
57.44	59.19	60.68	62.77	64.09	65.67	67.30	69.16	70.36	71.21
72.90	75.01	75.98	77.64	78.74	79.92	80.80	81.84	82.32	83.50
83.87	83.43	84.13	85.16	84.84					

GROUP 30

SECTION 7, RUN 10,

NUMBER OF T IS 25

T	T	T	T	T	T	T	T	T	T
57.88	60.03	61.72	63.43	64.49	66.33	68.06	69.55	71.02	72.34
73.42	75.40	76.67	78.20	79.27	80.44	81.51	82.29	83.34	83.18
84.24	84.94	84.52	84.78	85.19					

GROUP 31

SECTION 8, RUN 1, 4 DEG,DIV, 50,5,1,0,64,5, 50K, 10 RUNS,

NUMBER OF T IS 15

T	T	T	T	T	T	T	T	T	T
81.31	81.57	81.45	80.34	80.55	80.07	78.78	77.73	76.08	75.12
73.71	71.58	70.34	68.60	67.15					

GROUP 32

SECTION 8, RUN 2,

NUMBER OF T IS 15

T	T	T	T	T	T	T	T	T	T
83.05	83.74	82.91	83.22	81.47	81.25	80.58	78.46	77.49	76.13
74.70	73.04	71.75	70.11	67.97					

GROUP 33

SECTION 8, RUN 3,

NUMBER OF T IS 15

T	T	T	T	T	T	T	T	T	T
82.54	82.24	81.54	81.60	80.21	80.16	79.16	77.93	76.46	74.70
73.09	72.38	70.15	68.35	68.21					

GROUP 34

SECTION 8, RUN 4,

NUMBER OF T IS 15

T	T	T	T	T	T	T	T	T	T
81.64	81.57	80.62	80.40	79.54	78.83	77.77	75.97	75.38	73.54
72.05	70.80	69.25	67.05	65.77					

GROUP 35

SECTION 8, RUN 5,

NUMBER OF T IS 15

T	T	T	T	T	T	T	T	T	T
85.75	84.66	85.18	84.84	83.97	82.44	82.59	80.75	79.69	77.80
76.24	74.67	73.23	71.88	69.52					

GROUP 36

SECTION 8, RUN 6,

NUMBER OF T IS 15

T	T	T	T	T	T	T	T	T	T
85.04	84.14	84.24	83.60	83.24	83.16	82.59	80.75	79.69	77.22
75.57	74.16	72.54	71.42	68.74					

GROUP 37

SECTION 8, RUN 7,

NUMBER OF T IS 15

T	T	T	T	T	T	T	T	T	T
85.16	84.93	85.12	84.58	83.63	82.49	82.31	81.34	79.89	78.73
76.97	74.55	73.08	71.73	70.01					

GROUP 38

SECTION 8, RUN 8,

NUMBER OF T IS 15

T	T	T	T	T	T	T	T	T	T
86.39	86.17	86.01	85.71	84.67	83.33	82.72	81.90	79.91	78.45
77.24	75.74	73.80	72.65	70.25					

GROUP 39

SECTION 8, RUN 9

NUMBER OF T IS 15

T	T	T	T	T	T	T	T	T	T
85.04	84.73	84.07	84.23	83.37	82.36	81.90	80.35	79.24	78.72
76.47	75.52	73.45	71.18	69.33					

GROUP 40

SECTION 8, RUN 10,

NUMBER OF T IS 15

T	T	T	T	T	T	T	T	T	T
85.31	85.98	85.06	83.92	83.44	84.05	82.36	81.49	79.26	77.85
76.21	74.79	72.56	70.93	69.68					

SUMMARY OF DATA AND CORRECTIONS BEFORE NORMALIZATION

SECTION 1

NUMBER OF RUNS IS 3

NUMBER OF THETAS IS 24

DELTA THETA .250

THETA MIN 4.000

THETA MAX 9.750

NUMBER OF COUNTS IS 150000.00

BACKGROUND 2.59

CORRECTED FOR POLARIZATION

FACTOR FOR PENETRATION CORRECTION(2*ALPHA*MU) IS .29400

SECTION 2

NUMBER OF RUNS IS 3

NUMBER OF THETAS IS 7

DELTA THETA .500

THETA MIN 10.000

THETA MAX 13.000

NUMBER OF COUNTS IS 150000.00

```
BACKGROUND  2,59
CORRECTED FOR POLARIZATION
FACTOR FOR PENETRATION CORRECTION(2*ALPHA*MU) IS      ,29400
                SECTION    3
NUMBER OF RUNS IS   4
NUMBER OF THETAS IS  26
DELTA THETA   ,500
THETA MIN 10,000
THETA MAX 22,500
NUMBER OF COUNTS IS  200000,00
BACKGROUND  3,82
CORRECTED FOR POLARIZATION
FACTOR FOR PENETRATION CORRECTION(2*ALPHA*MU) IS      ,58800
                SECTION    4
NUMBER OF RUNS IS   4
NUMBER OF THETAS IS   3
DELTA THETA   ,500
THETA MIN 23,000
THETA MAX 24,000
NUMBER OF COUNTS IS  200000,00
BACKGROUND  3,82
CORRECTED FOR POLARIZATION
FACTOR FOR PENETRATION CORRECTION(2*ALPHA*MU) IS      ,58800
                SECTION    5
NUMBER OF RUNS IS  10
NUMBER OF THETAS IS  29
DELTA THETA   ,500
THETA MIN 23,000
THETA MAX 37,000
NUMBER OF COUNTS IS  500000,00
BACKGROUND  2,55
CORRECTED FOR POLARIZATION
FACTOR FOR PENETRATION CORRECTION(2*ALPHA*MU) IS     1,17600
                SECTION    6
NUMBER OF RUNS IS  10
NUMBER OF THETAS IS   3
```

```
DELTA THETA    .500
THETA MIN 37.500
THETA MAX 38.500
NUMBER OF COUNTS IS  500000.00
BACKGROUND  2.55
CORRECTED FOR POLARIZATION
FACTOR FOR PENETRATION CORRECTION(2*ALPHA*MU) IS     1.17600
                SECTION    7
NUMBER OF RUNS IS  10
NUMBER OF THETAS IS  25
DELTA THETA    .500
THETA MIN 37.500
THETA MAX 49.500
NUMBER OF COUNTS IS  500000.00
BACKGROUND  5.05
CORRECTED FOR POLARIZATION
FACTOR FOR PENETRATION CORRECTION(2*ALPHA*MU) IS     2.35200
                SECTION    8
NUMBER OF RUNS IS  10
NUMBER OF THETAS IS  15
DELTA THETA  1.000
THETA MIN 50.500
THETA MAX 64.500
NUMBER OF COUNTS IS  500000.00
BACKGROUND  2.05
CORRECTED FOR POLARIZATION
FACTOR FOR PENETRATION CORRECTION(2*ALPHA*MU) IS     2.35200


                NORMALIZATION
NUMBER OF SECTIONS NORMALIZED TO SUCCEEDING SECTIONS IS   2
NUMBER OF SECTIONS REQUIRING NO NORMALIZATION IS    1
NUMBER OF SECTIONS NORMALIZED TO PRECEDING SECTIONS IS    1
      NORMALIZATION TO SUCCEEDING SECTIONS
                SECTION    1
NUMBER OF THETAS IS   31
NUMBER OF OVERLAP POINTS WITH FOLLOWING SECTION    7
```

H_2O at 150°C

NUMBER OF OVERLAP POINTS WITH PRECEDING SECTION IS 0

R IS 1.83458

SECTION 2

NUMBER OF THETAS IS 29

NUMBER OF OVERLAP POINTS WITH FOLLOWING SECTION 3

NUMBER OF OVERLAP POINTS WITH PRECEDING SECTION IS 7

R IS 1.56558

SECTIONS WITH NO NORMALIZATION

SECTION 1

NUMBER OF THETAS IS 32

NUMBER OF OVERLAP POINTS WITH FOLLOWING SECTION 3

NUMBER OF OVERLAP POINTS WITH PRECEDING SECTION IS 3

NORMALIZATION TO PRECEDING SECTIONS

SECTION 1

NUMBER OF THETAS IS 40

NUMBER OF OVERLAP POINTS WITH FOLLOWING SECTION 0

NUMBER OF OVERLAP POINTS WITH PRECEDING SECTION IS 3

R IS .55071

S	DI	THETA	ERROR
1.233	8189.95	4.00	22.0350
1.310	8953.84	4.25	8.3976
1.387	10044.06	4.50	9.4322
1.464	11331.30	4.75	10.6555
1.541	12823.71	5.00	12.0761
1.618	14747.39	5.25	13.9085
1.695	16979.13	5.50	16.0386
1.771	18529.53	5.75	17.5319
1.848	20937.44	6.00	19.8443
1.925	22336.02	6.25	21.2077
2.002	24403.52	6.50	23.2140
2.078	26311.08	6.75	25.0770
2.155	25571.55	7.00	24.4211
2.231	25289.59	7.25	24.2020
2.308	24336.69	7.50	23.3401
2.384	23268.05	7.75	22.3647
2.461	21971.67	8.00	21.1671
2.537	20844.57	8.25	20.1287
2.614	19858.50	8.50	19.2231
2.690	18154.67	8.75	17.6177
2.766	16741.81	9.00	16.2884
2.842	15992.90	9.25	15.6009
2.918	14850.38	9.50	14.5256
2.994	13484.90	9.75	13.2266
3.070	12593.66	10.00	19.1068
3.222	10825.59	10.50	16.5004
3.374	9383.42	11.00	14.5706
3.525	8526.60	11.50	13.7115

H_2O at 150°C

S	DI	THETA	ERROR
3,676	8017,06	12,00	13,1598
3,827	7803,99	12,50	12,8359
3,978	7816,49	13,00	12,9692
4,128	8014,84	13,50	13,1256
4,278	7680,57	14,00	12,6756
4,427	7570,34	14,50	12,5935
4,576	7154,85	15,00	12,0003
4,725	6945,40	15,50	11,7477
4,874	6604,12	16,00	11,2677
5,022	6297,05	16,50	10,8398
5,170	5985,02	17,00	10,3971
5,317	5623,18	17,50	9,8601
5,464	5409,63	18,00	9,5766
5,610	5117,20	18,50	9,1476
5,757	4812,40	19,00	8,6887
5,902	4694,11	19,50	8,5614
6,047	4573,71	20,00	8,4282
6,192	4476,73	20,50	8,3364
6,337	4440,91	21,00	8,3582
6,480	4363,19	21,50	8,3011
6,624	4173,11	22,00	8,0268
6,766	4157,23	22,50	8,0853
6,909	3998,75	23,00	7,8726
7,051	3900,36	23,50	7,6580
7,192	3705,40	24,00	7,3227
7,332	3548,73	24,50	7,1516
7,473	3433,76	25,00	7,0005
7,612	3239,46	25,50	6,6817
7,751	3139,47	26,00	6,5516
7,890	2984,79	26,50	6,3023
8,027	2863,39	27,00	6,1175
8,164	2746,93	27,50	5,9380
8,301	2673,83	28,00	5,8483
8,437	2551,12	28,50	5,6457
8,572	2476,51	29,00	5,5449
8,707	2390,50	29,50	5,4148
8,841	2305,02	30,00	5,2817
8,974	2233,19	30,50	5,1759
9,107	2148,26	31,00	5,0357
9,239	2084,98	31,50	4,9422
9,370	2013,00	32,00	4,8244
9,500	1948,33	32,50	4,7203
9,630	1872,64	33,00	4,5854
9,759	1808,94	33,50	4,4758
9,887	1756,83	34,00	4,3914
10,015	1705,22	34,50	4,3048
10,142	1649,24	35,00	4,2037
10,268	1608,31	35,50	4,1378
10,393	1568,03	36,00	4,0706
10,517	1515,07	36,50	3,9673
10,641	1487,84	37,00	3,9284
10,764	1454,64	37,50	3,8788
10,886	1423,64	38,00	3,8141
11,007	1397,35	38,50	3,7691
11,127	1368,94	39,00	3,7212
11,247	1347,12	39,50	3,6845
11,366	1319,06	40,00	3,6283
11,483	1298,69	40,50	3,5909
11,600	1278,34	41,00	3,5512
11,716	1253,69	41,50	3,4973
11,831	1238,91	42,00	3,4686
11,946	1217,93	42,50	3,4205
12,059	1195,31	43,00	3,3655
12,171	1175,35	43,50	3,3159
12,283	1159,38	44,00	3,2755
12,393	1142,98	44,50	3,2319
12,503	1129,51	45,00	3,1947
12,611	1110,98	45,50	3,1414
12,719	1099,29	46,00	3,1057
12,826	1085,34	46,50	3,0619

H_2O at 150°C

S	DI	THETA	ERROR
12,932	1075,35	47,00	3,0277
13,036	1063,81	47,50	2,9876
13,140	1054,30	48,00	2,9518
13,243	1046,20	48,50	2,9185
13,345	1035,90	49,00	2,8777
13,445	1026,18	49,50	2,8374
13,644	1016,45	50,50	2,7801
13,838	1001,88	51,50	2,7054
14,028	987,62	52,50	2,6283
14,214	971,71	53,50	2,5445
14,395	959,46	54,50	2,4685
14,572	942,92	55,50	2,3804
14,744	926,77	56,50	2,2931
14,913	917,26	57,50	2,2223
15,076	906,31	58,50	2,1483
15,235	896,15	59,50	2,0770
15,389	886,92	60,50	2,0090
15,539	876,23	61,50	1,9391
15,684	867,88	62,50	1,8761
15,824	858,57	63,50	1,8129
15,959	850,70	64,50	1,7547

NUMBER OF POINTS IS 119

H_2O at 150°C

DATA FOR H_2O at 200°C

GROUP 1

SECTION 5, RUN 1. 1/2 DEG.DIV., 4.0,8.25,12.75, 30K, 6 RUNS,

NUMBER OF T IS 36

T	T	T	T	T	T	T	T	T	T
19.96	17.01	15.85	16.99	16.17	15.10	13.84	12.77	11.93	12.01
11.28	11.34	11.45	11.92	12.55	13.09	13.89	15.47	16.81	18.21
20.01	22.91	25.32	27.74	30.55	34.32	38.75	41.48	45.70	49.97
53.14	57.17	58.59	62.97	63.25	67.66				

GROUP 2

SECTION 5, RUN 2.

NUMBER OF T IS 36

T	T	T	T	T	T	T	T	T	T
19.87	16.71	16.50	17.89	16.39	15.52	14.27	13.32	12.47	12.34
11.48	12.15	12.20	11.94	12.67	13.76	14.44	16.05	17.37	19.48
21.07	23.91	25.50	28.73	32.45	36.04	38.45	43.22	46.88	50.15
51.64	55.46	57.72	61.76	62.56	64.86				

GROUP 3

SECTION 5, RUN 3.

NUMBER OF T IS 36

T	T	T	T	T	T	T	T	T	T
20.14	16.95	17.12	17.54	16.53	15.43	14.53	13.18	12.68	12.18
11.82	11.83	11.55	12.39	12.60	13.14	14.56	15.73	17.12	19.45
21.06	23.37	25.87	28.00	33.04	35.67	39.31	42.58	45.41	49.31
52.27	56.36	57.25	62.04	63.23	65.06				

GROUP 4

SECTION 5, RUN 4.

NUMBER OF T IS 36

T	T	T	T	T	T	T	T	T	T
21.13	17.47	18.14	18.38	17.86	16.57	14.67	13.84	13.36	12.51
12.28	12.71	12.39	13.71	13.20	14.05	16.03	16.77	18.29	20.60
21.84	25.11	28.35	31.09	35.01	39.37	42.10	46.61	51.55	54.05
58.11	63.48	64.11	67.97	72.18	75.21				

GROUP 5

SECTION 5, RUN 5.

NUMBER OF T IS 36

T	T	T	T	T	T	T	T	T	T
20.55	16.89	16.84	17.99	16.67	15.61	14.50	13.79	13.23	12.52
11.52	11.84	12.22	12.67	13.26	14.63	16.46	18.53	18.11	21.17
25.96	30.00	31.84	35.88	40.01	43.10	44.91	50.31	54.34	58.98
61.70	62.68	65.43	69.66	72.59	73.57				

GROUP 6

SECTION 5, RUN 6.

NUMBER OF T IS 36

T	T	T	T	T	T	T	T	T	T
20.34	20.07	18.99	17.31	16.26	15.37	13.97	12.73	12.22	11.40
11.19	11.47	11.10	11.66	12.63	13.05	14.43	15.09	16.42	17.88
19.38	22.21	24.35	27.54	30.41	33.59	38.75	41.48	45.67	48.17
51.22	54.63	58.27	58.97	62.33	64.10				

GROUP 7

SECTION 6, RUNS 1-6, 1/2 DEG.DIV., 13.0,0.5,14.0, 30K, 6 RUNS.

NUMBER OF T IS 18

T	T	T	T	T	T	T	T	T	T
70.31	72.26	73.19	68.23	70.71	74.94	66.37	69.95	74.74	77.31
78.73	82.11	74.39	79.39	82.97	68.23	70.71	74.94		

GROUP 8

SECTION 7, RUN 1, 1 DEG.DIV, 13.0,0.5,23.5, 30K, 7 RUNS.

NUMBER OF T IS 22

T	T	T	T	T	T	T	T	T	T
21.06	22.28	23.22	24.56	26.33	28.75	31.94	34.23	37.81	41.15
44.50	48.79	52.08	55.67	58.94	62.25	65.97	69.96	73.94	77.99
83.56	89.01								

GROUP 9

SECTION 7, RUN 2.

NUMBER OF T IS 22

T	T	T	T	T	T	T	T	T	T
21.06	22.21	23.53	24.62	26.35	29.14	32.04	34.51	38.12	42.21
45.86	49.76	53.28	56.08	59.84	64.74	68.63	71.51	77.55	81.42
88.48	94.15								

GROUP 10

SECTION 7, RUN 3.

NUMBER OF T IS 22

T	T	T	T	T	T	T	T	T	T
22.29	23.31	24.61	25.69	28.21	30.48	32.83	36.31	39.91	43.50
48.01	52.10	56.15	60.06	64.74	67.55	71.87	76.43	81.12	86.03
90.50	103.06								

GROUP 11

SECTION 7, RUN 4.

NUMBER OF T IS 22

T	T	T	T	T	T	T	T	T	T
20.85	22.05	23.17	24.99	26.33	28.74	30.84	34.39	36.38	41.43
45.26	49.39	52.79	56.04	60.36	63.60	67.36	72.30	75.87	79.74
85.54	91.48								

GROUP 12

SECTION 7, RUN 5.

NUMBER OF T IS 22

T	T	T	T	T	T	T	T	T	T
22.27	23.10	24.03	25.78	27.20	30.56	33.22	35.64	39.15	43.40
47.60	51.71	54.86	60.06	63.26	66.84	71.33	76.31	81.24	85.77
91.74	96.90								

GROUP 13

SECTION 7, RUN 6.

NUMBER OF T IS 22

T	T	T	T	T	T	T	T	T	T
20.36	21.13	22.39	23.88	25.27	27.55	30.23	33.52	35.96	40.59
43.90	47.79	52.08	55.26	59.53	62.77	66.73	70.17	75.33	78.62
84.61	90.40								

GROUP 14

SECTION 7, RUN 7.

NUMBER OF T IS 22

T	T	T	T	T	T	T	T	T	T
21.15	22.96	23.46	25.10	26.95	28.90	32.29	34.62	39.54	42.07
46.23	50.73	55.20	59.39	62.77	66.52	69.57	74.64	78.99	84.30
88.85	95.52								

GROUP 15

SECTION 8, RUNS 1-7. 1 DEG.DIV., 24.8,0.5,25.0, 30K, 7 RUNS.

NUMBER OF T IS 21

T	T	T	T	T	T	T	T	T	T
95.68	101.77	110.89	99.98	107.90	115.38	108.27	114.56	123.39	100.66
120.86	127.04	105.33	112.02	120.26	98.61	105.05	110.38	101.99	108.57
116.40									

GROUP 16

SECTION 9, RUN 1. 2 DEG.DIV., 24.0,0.5,33.0, 30K, 10 RUNS.

NUMBER OF T IS 19

T	T	T	T	T	T	T	T	T	T
32.90	35.23	37.57	40.45	42.91	45.84	48.61	51.65	54.59	57.47
59.11	61.59	65.25	68.30	70.70	74.37	77.15	80.74	83.63	

GROUP 17

SECTION 9, RUN 2.

NUMBER OF T IS 19

T	T	T	T	T	T	T	T	T	T
33.35	35.83	38.08	40.78	43.11	45.76	48.67	51.28	54.08	56.87
60.04	63.53	67.40	69.99	73.44	77.39	80.49	82.54	88.00	

GROUP 18

SECTION 9, RUN 3.

NUMBER OF T IS 19

T	T	T	T	T	T	T	T	T	T
33.55	35.86	38.88	41.74	44.18	46.60	49.34	52.34	55.38	58.43
61.94	63.61	66.87	68.68	72.48	75.74	78.48	83.40	86.88	

GROUP 19

SECTION 9, RUN 4.

NUMBER OF T IS 19

T	T	T	T	T	T	T	T	T	T
33.51	35.38	38.85	41.05	43.91	46.66	49.32	52.40	54.95	58.45
60.32	64.43	66.34	68.39	72.25	75.39	78.58	82.18	85.71	

GROUP 20

SECTION 9, RUN 5.

NUMBER OF T IS 19

T	T	T	T	T	T	T	T	T	T
32.98	35.52	37.65	40.07	43.21	45.38	49.19	52.65	54.51	58.46
60.24	63.67	66.35	68.82	72.52	75.35	77.97	82.81	85.96	

GROUP 21

SECTION 9, RUN 6.

NUMBER OF T IS 19

T	T	T	T	T	T	T	T	T	T
33.18	35.63	37.51	41.26	44.53	46.87	48.91	51.76	54.91	58.54
60.74	63.58	66.98	70.48	72.77	76.63	80.37	83.23	86.82	

GROUP 22

SECTION 9, RUN 7.

NUMBER OF T IS 19

T	T	T	T	T	T	T	T	T	T
34.28	36.39	39.50	41.55	44.49	47.86	50.82	54.31	56.78	59.23
62.58	65.47	68.11	71.17	75.83	78.58	83.18	85.93	88.81	

GROUP 23

SECTION 9, RUN 8.

NUMBER OF T IS 19

T	T	T	T	T	T	T	T	T	T
32.18	34.18	37.05	40.11	42.79	45.43	47.72	50.28	53.07	55.21
58.37	62.13	64.82	67.54	70.03	73.92	77.28	81.57	84.72	

GROUP 24

SECTION 9, RUN 9.

NUMBER OF T IS 19

T	T	T	T	T	T	T	T	T	T
33.73	36.48	37.83	41.21	43.52	47.26	50.62	53.37	56.60	59.18
61.38	65.45	67.52	71.30	75.48	77.61	81.85	84.85	89.48	

GROUP 25

SECTION 9, RUN 10.

NUMBER OF T IS 19

T	T	T	T	T	T	T	T	T	T
33.73	36.52	39.39	41.68	44.16	47.60	50.47	53.08	55.94	60.44
62.70	65.64	69.37	71.91	74.52	78.15	83.44	85.98	89.36	

GROUP 26

SECTION 10, RUNS 1-10, 2 DEG.DIV., 33.5,0.5,34.5, 30K, 10 RUNS.

NUMBER OF T IS 30

T	T	T	T	T	T	T	T	T	T
87.18	90.77	94.22	92.29	93.83	97.68	91.06	92.67	96.35	88.08
93.51	96.04	88.97	92.75	95.95	89.95	93.85	97.93	93.13	96.25
99.37	87.54	92.99	97.65	92.55	96.26	98.69	93.54	96.44	101.33

H_2O at 200°C

GROUP 27

SECTION II, RUN 1. 4 DEG.DIV., 33.5,0.5,50.0, 50K, 10 RUNS.

NUMBER OF T IS 34

T	T	T	T	T	T	T	T	T	T
48.96	51.11	53.35	55.19	57.43	58.84	60.81	61.92	63.93	65.13
67.20	68.67	70.12	71.29	72.77	74.01	75.48	76.39	77.55	79.59
80.35	81.63	82.38	83.82	84.01	85.51	84.52	84.79	85.86	86.21
86.48	86.80	86.68	86.16						

GROUP 28

SECTION II, RUN 2.

NUMBER OF T IS 34

T	T	T	T	T	T	T	T	T	T
50.03	51.92	54.47	56.28	58.64	60.59	62.20	63.96	65.35	67.92
68.35	69.95	71.88	73.34	73.64	76.61	77.65	78.18	79.90	80.99
82.77	84.40	85.04	85.79	86.98	88.09	87.89	88.03	88.46	88.29
88.02	88.75	89.09	88.33						

GROUP 29

SECTION II, RUN 3.

NUMBER OF T IS 34

T	T	T	T	T	T	T	T	T	T
49.59	51.44	54.08	55.84	58.59	59.90	61.70	64.05	65.67	67.28
69.24	69.92	71.76	72.81	73.82	75.70	76.60	78.80	79.10	80.70
81.40	82.74	84.39	85.02	85.21	87.41	86.80	87.65	87.39	87.53
88.23	88.11	88.68	89.06						

GROUP 30

SECTION II, RUN 4.

NUMBER OF T IS 34

T	T	T	T	T	T	T	T	T	T
50.73	52.89	54.70	57.38	59.19	61.27	62.86	64.85	66.56	69.02
69.66	70.66	72.44	73.83	75.43	76.05	77.49	79.33	81.04	82.15
83.73	84.23	85.19	87.23	86.97	87.53	87.83	88.32	89.01	89.54
89.02	90.23	89.63	89.56						

GROUP 31

SECTION II, RUN 5.

NUMBER OF T IS 34

T	T	T	T	T	T	T	T	T	T
48.57	50.71	53.13	55.13	56.68	58.59	60.28	62.71	63.52	65.74
67.57	68.97	70.45	71.84	73.03	74.11	76.73	78.06	79.28	79.78
81.52	83.53	84.12	85.03	84.73	85.33	86.64	86.89	87.10	87.55
87.93	87.94	87.96	88.55						

GROUP 32

SECTION II, RUN 6.

NUMBER OF T IS 34

T	T	T	T	T	T	T	T	T	T
51.27	53.16	54.75	57.84	59.14	61.66	63.11	65.61	66.36	69.27
70.08	72.08	72.95	74.31	75.65	77.26	78.15	79.64	80.32	81.55
82.67	84.07	84.63	85.71	86.45	86.49	87.69	88.57	88.77	87.86
88.81	88.40	89.22	89.22						

GROUP 33

SECTION 11, RUN 7.

NUMBER OF T IS 34

T	T	T	T	T	T	T	T	T	T
51.45	53.34	55.58	57.59	59.52	61.44	62.90	64.93	67.03	68.54
69.92	71.30	72.37	73.88	75.36	76.59	77.60	78.87	81.15	82.28
82.82	84.43	85.70	85.85	87.09	87.60	88.11	88.86	88.58	89.28
89.91	88.98	89.09	89.18						

GROUP 34

SECTION 11, RUN 8.

NUMBER OF T IS 34

T	T	T	T	T	T	T	T	T	T
51.57	53.39	55.54	57.50	60.45	62.16	63.42	65.59	67.28	69.25
70.64	71.64	73.44	74.17	76.03	77.03	78.85	80.46	81.40	82.46
83.59	84.86	86.10	87.74	86.03	88.89	89.62	89.30	89.55	89.41
90.65	89.84	90.43	90.46						

GROUP 35

SECTION 11, RUN 9.

NUMBER OF T IS 34

T	T	T	T	T	T	T	T	T	T
52.64	55.22	56.97	59.22	61.49	63.39	65.62	67.03	69.45	70.37
72.30	73.86	75.91	77.04	78.01	79.38	81.29	81.83	83.35	84.09
86.20	87.78	88.89	89.82	90.44	91.99	92.41	92.23	93.06	92.33
93.94	93.25	93.17	92.81						

GROUP 36

SECTION 11, RUN 10.

NUMBER OF T IS 34

T	T	T	T	T	T	T	T	T	T
53.04	55.74	57.81	60.36	62.33	64.46	66.16	68.18	69.71	71.69
73.90	75.19	76.41	78.07	79.20	80.52	81.54	83.40	84.71	86.13
87.14	88.79	89.52	90.83	90.97	91.69	92.56	94.54	90.96	90.61
93.64	93.52	93.95	93.00						

GROUP 37

SECTION 12, RUNS 1-10. 4 DEG.DIV.,50.5,1.0,51.5, 50K, 10 RUNS.

NUMBER OF T IS 20

T	T	T	T	T	T	T	T	T	T
88.34	88.15	87.05	86.93	89.80	90.42	88.51	89.08	89.76	89.70
89.34	88.95	89.82	90.88	90.35	91.68	92.75	92.45	92.89	93.14

GROUP 38

SECTION 13, RUN 1. 4 DEG.DIV., 50.5,1.0,64.5, 50K, 10 RUNS.

NUMBER OF T IS 15

T	T	T	T	T	T	T	T	T	T
89.98	89.68	89.45	89.04	88.63	86.89	85.17	84.96	83.17	80.91
79.73	77.55	75.35	74.40	72.53					

GROUP 39

SECTION 13, RUN 2.

NUMBER OF T IS 15

T	T	T	T	T	T	T	T	T	T
89.59	89.97	89.02	86.90	86.00	86.30	84.05	82.70	81.29	79.55
77.17	76.15	74.74	72.80	70.28					

GROUP 40

SECTION 13, RUN 3.

NUMBER OF T IS 15

T	T	T	T	T	T	T	T	T	T
87.81	89.12	87.56	87.04	86.57	85.37	84.55	82.50	80.93	79.24
77.85	76.28	74.62	72.12	70.92					

GROUP 41

SECTION 13, RUN 4.

NUMBER OF T IS 15

T	T	T	T	T	T	T	T	T	T
90.54	91.82	90.52	89.55	88.79	87.37	85.61	84.89	83.31	82.02
80.89	78.12	76.51	74.83	72.32					

GROUP 42

SECTION 13, RUN 5.

NUMBER OF T IS 15

T	T	T	T	T	T	T	T	T	T
88.00	88.61	87.73	87.22	86.01	86.52	83.99	82.66	81.06	80.44
77.94	76.32	74.95	73.36	71.46					

GROUP 43

SECTION 13, RUN 6.

NUMBER OF T IS 15

T	T	T	T	T	T	T	T	T	T
90.35	91.68	90.12	88.57	88.76	87.54	85.83	84.97	83.77	81.94
80.21	78.89	77.42	75.55	74.16					

GROUP 44

SECTION 13, RUN 7.

NUMBER OF T IS 15

T	T	T	T	T	T	T	T	T	T
92.89	93.14	92.13	92.36	91.62	90.45	88.76	87.69	86.38	85.13
84.09	82.03	80.27	78.07	77.18					

GROUP 45

SECTION 13, RUN 8.

NUMBER OF T IS 15

T	T	T	T	T	T	T	T	T	T
96.00	95.95	94.12	93.46	91.82	91.61	90.17	89.02	87.40	85.85
84.51	82.50	79.83	78.55	77.79					

GROUP 46

SECTION 13, RUN 9.

NUMBER OF T IS 15

T	T	T	T	T	T	T	T	T	T
92.84	92.70	92.34	91.38	98.14	89.55	88.09	86.56	85.39	83.86
82.11	80.26	78.46	76.41	78.10					

GROUP 47

SECTION 13, RUN 10.

NUMBER OF T IS 15

T	T	T	T	T	T	T	T	T	T
96.61	97.87	95.01	94.17	92.21	91.89	90.08	89.35	88.08	85.78
84.03	82.17	81.36	79.56	77.69					

SUMMARY OF DATA AND CORRECTIONS BEFORE NORMALIZATION

SECTION 1

NUMBER OF RUNS IS 6

NUMBER OF THETAS IS 36

DELTA THETA .250

THETA MIN 4.000

THETA MAX 12.750

NUMBER OF COUNTS IS 180000.00

BACKGROUND 0

NO CORRECTION FOR POLARIZATION

NO CORRECTION FOR PENETRATION

SECTION 2

NUMBER OF RUNS IS 6

NUMBER OF THETAS IS 3

DELTA THETA .500

THETA MIN 13.000

THETA MAX 14.000

NUMBER OF COUNTS IS 180000.00

BACKGROUND 0

NO CORRECTION FOR POLARIZATION

NO CORRECTION FOR PENETRATION

SECTION 3

NUMBER OF RUNS IS 7

NUMBER OF THETAS IS 22

```
DELTA THETA    .500
THETA MIN 13.000
THETA MAX 23.500
NUMBER OF COUNTS IS  210000.00
BACKGROUND      0
NO CORRECTION FOR POLARIZATION
NO CORRECTION FOR PENETRATION
                SECTION     4
NUMBER OF RUNS IS    7
NUMBER OF THETAS IS    3
DELTA THETA    .500
THETA MIN 24.000
THETA MAX 25.000
NUMBER OF COUNTS IS  210000.00
BACKGROUND      0
NO CORRECTION FOR POLARIZATION
NO CORRECTION FOR PENETRATION
                SECTION     5
NUMBER OF RUNS IS   10
NUMBER OF THETAS IS   19
DELTA THETA    .500
THETA MIN 24.000
THETA MAX 33.000
NUMBER OF COUNTS IS  300000.00
BACKGROUND      0
NO CORRECTION FOR POLARIZATION
NO CORRECTION FOR PENETRATION
                SECTION     6
NUMBER OF RUNS IS   10
NUMBER OF THETAS IS    3
DELTA THETA    .500
THETA MIN 33.500
THETA MAX 34.500
NUMBER OF COUNTS IS  300000.00
BACKGROUND      0
NO CORRECTION FOR POLARIZATION
NO CORRECTION FOR PENETRATION
```

H_2O at 200°C

SECTION 7

NUMBER OF RUNS IS 10

NUMBER OF THETAS IS 34

DELTA THETA .500

THETA MIN 33.500

THETA MAX 50.000

NUMBER OF COUNTS IS 500000.00

BACKGROUND 0

NO CORRECTION FOR POLARIZATION

NO CORRECTION FOR PENETRATION

SECTION 8

NUMBER OF RUNS IS 10

NUMBER OF THETAS IS 2

DELTA THETA 1.000

THETA MIN 50.500

THETA MAX 51.500

NUMBER OF COUNTS IS 500000.00

BACKGROUND 0

NO CORRECTION FOR POLARIZATION

NO CORRECTION FOR PENETRATION

SECTION 9

NUMBER OF RUNS IS 10

NUMBER OF THETAS IS 15

DELTA THETA 1.000

THETA MIN 50.500

THETA MAX 64.500

NUMBER OF COUNTS IS 500000.00

BACKGROUND 0

NO CORRECTION FOR POLARIZATION

NO CORRECTION FOR PENETRATION

NORMALIZATION

NUMBER OF SECTIONS NORMALIZED TO SUCCEEDING SECTIONS IS 0

NUMBER OF SECTIONS REQUIRING NO NORMALIZATION IS 5

NUMBER OF SECTIONS NORMALIZED TO PRECEDING SECTIONS IS 0

SECTIONS WITH NO NORMALIZATION

SECTION 1

NUMBER OF THETAS IS 39

NUMBER OF OVERLAP POINTS WITH FOLLOWING SECTION 3

NUMBER OF OVERLAP POINTS WITH PRECEDING SECTION IS 0

SECTION 2

NUMBER OF THETAS IS 25

NUMBER OF OVERLAP POINTS WITH FOLLOWING SECTION 3

NUMBER OF OVERLAP POINTS WITH PRECEDING SECTION IS 3

SECTION 3

NUMBER OF THETAS IS 22

NUMBER OF OVERLAP POINTS WITH FOLLOWING SECTION 3

NUMBER OF OVERLAP POINTS WITH PRECEDING SECTION IS 3

SECTION 4

NUMBER OF THETAS IS 36

NUMBER OF OVERLAP POINTS WITH FOLLOWING SECTION 2

NUMBER OF OVERLAP POINTS WITH PRECEDING SECTION IS 3

SECTION 5

NUMBER OF THETAS IS 15

NUMBER OF OVERLAP POINTS WITH FOLLOWING SECTION 0

NUMBER OF OVERLAP POINTS WITH PRECEDING SECTION IS 2

S	DI	THETA	ERROR	S	DI	THETA	ERROR
1.233	1475.53	4.00	3.4779	2.078	2523.13	6.75	5.9471
1.310	1712.65	4.25	4.0368	2.155	2538.43	7.00	5.9831
1.387	1740.14	4.50	4.1015	2.231	2422.94	7.25	5.7109
1.464	1696.51	4.75	3.9987	2.308	2340.40	7.50	5.5164
1.541	1802.16	5.00	4.2477	2.384	2202.64	7.75	5.1917
1.618	1923.08	5.25	4.5327	2.461	2004.23	8.00	4.7240
1.695	2098.39	5.50	4.9460	2.537	1843.51	8.25	4.3452
1.771	2260.45	5.75	5.3279	2.614	1728.77	8.50	4.0748
1.848	2371.85	6.00	5.5905	2.690	1541.23	8.75	3.5327
1.925	2467.11	6.25	5.8150	2.766	1391.90	9.00	3.2807
2.002	2587.32	6.50	6.0984	2.842	1220.26	9.25	2.8762

H_2O at 200°C

S	DI	THETA	ERROR
2.918	1116.42	9.50	2.6314
2.994	1005.70	9.75	2.3705
3.070	893.43	10.00	2.1058
3.146	810.48	10.25	1.9103
3.222	742.97	10.50	1.7512
3.298	677.51	10.75	1.5969
3.374	621.65	11.00	1.4653
3.450	579.47	11.25	1.3658
3.525	548.65	11.50	1.2932
3.601	514.61	11.75	1.2129
3.676	498.10	12.00	1.1740
3.752	469.52	12.25	1.1067
3.827	454.38	12.50	1.0710
3.902	438.53	12.75	1.0336
3.978	423.69	13.00	.9986
4.128	407.47	13.50	.9604
4.278	388.86	14.00	.9166
3.978	1409.02	13.00	3.0747
4.128	1337.24	13.50	2.9181
4.278	1277.29	14.00	2.7873
4.427	1202.61	14.50	2.6243
4.576	1125.16	15.00	2.4553
4.725	1028.81	15.50	2.2450
4.874	940.06	16.00	2.0514
5.022	863.42	16.50	1.8841
5.170	785.43	17.00	1.7139
5.317	713.44	17.50	1.5568
5.464	653.47	18.00	1.4260
5.610	599.54	18.50	1.3083
5.757	557.86	19.00	1.2173
5.902	521.69	19.50	1.1384
6.047	489.01	20.00	1.0671
6.192	462.28	20.50	1.0088
6.337	436.17	21.00	.9518
6.480	410.70	21.50	.8962
6.624	386.00	22.00	.8423
6.766	365.94	22.50	.7985
6.909	342.42	23.00	.7472
7.051	317.93	23.50	.6938
7.192	295.56	24.00	.6450
7.332	272.47	24.50	.5946
7.473	254.87	25.00	.5562
7.192	899.85	24.00	1.6429
7.332	840.29	24.50	1.5342
7.473	784.70	25.00	1.4327
7.612	731.89	25.50	1.3362
7.751	686.80	26.00	1.2539
7.890	644.80	26.50	1.1772
8.027	607.69	27.00	1.1095
8.164	573.48	27.50	1.0470
8.301	544.55	28.00	.9942
8.437	514.33	28.50	.9390
8.572	493.89	29.00	.9017
8.707	469.41	29.50	.8570
8.841	448.42	30.00	.8187
8.974	430.68	30.50	.7863
9.107	410.95	31.00	.7503
9.239	393.12	31.50	.7177
9.370	375.57	32.00	.6857
9.500	360.04	32.50	.6573
9.630	345.08	33.00	.6300
9.759	331.75	33.50	.6057
9.887	319.38	34.00	.5831
10.015	307.63	34.50	.5616
9.759	984.54	33.50	1.3924
9.887	945.32	34.00	1.3369
10.015	908.46	34.50	1.2848
10.142	873.62	35.00	1.2355

H_2O at 200°C

S	DI	THETA	ERROR
10.268	842.53	35.50	1.1915
10.393	816.59	36.00	1.1548
10.517	794.84	36.50	1.1241
10.641	770.62	37.00	1.0898
10.764	751.92	37.50	1.0634
10.886	729.70	38.00	1.0320
11.007	715.45	38.50	1.0118
11.127	702.01	39.00	.9928
11.247	687.07	39.50	.9717
11.366	675.15	40.00	.9548
11.483	664.06	40.50	.9391
11.600	651.67	41.00	.9216
11.716	639.89	41.50	.9049
11.831	628.96	42.00	.8895
11.946	618.97	42.50	.8753
12.059	609.96	43.00	.8626
12.171	600.82	43.50	.8497
12.283	590.70	44.00	.8354
12.393	584.14	44.50	.8261
12.503	576.81	45.00	.8157
12.611	575.45	45.50	.8138
12.719	567.84	46.00	.8030
12.826	565.57	46.50	.7998
12.932	562.32	47.00	.7952
13.036	562.21	47.50	.7951
13.140	562.68	48.00	.7957
13.243	557.64	48.50	.7886
13.345	558.15	49.00	.7893
13.445	556.85	49.50	.7875
13.545	557.83	50.00	.7889
13.644	556.41	50.50	.7869
13.838	554.71	51.50	.7845
13.644	546.68	50.50	.7731
13.838	543.16	51.50	.7681
14.028	550.66	52.50	.7788
14.214	555.75	53.50	.7859
14.395	561.45	54.50	.7940
14.572	565.94	55.50	.8004
14.744	577.17	56.50	.8162
14.913	584.59	57.50	.8267
15.076	594.69	58.50	.8410
15.235	606.27	59.50	.8574
15.389	618.41	60.50	.8746
15.539	632.70	61.50	.8948
15.684	646.40	62.50	.9142
15.824	661.68	63.50	.9358
15.959	673.46	64.50	.9524

NUMBER OF POINTS IS 137

H_2O at 200°C

3.2 Reduced Intensity and Radial Distribution Functions. The output of this program is divided into two parts. The first part lists the reduced intensity functions, computed from

$$i(s) = [C\ (DI - I_c) - \sum_i f_i^2(s)] \qquad (3.2.1)$$

where DI is the relative intensity listed in section 3.1, I_c is the correction for incoherent or Compton scattering, C is the scaling factor, and $\sum_i f_i^2(s)$ is the part of the scattering due to independent atoms, summed over the stoichiometric unit (one water molecule). The coherent and incoherent form factors for oxygen and hydrogen were obtained from the literature[15]. The values of the relative intensities were extrapolated at low angle from θ equal to 4.0 degrees to θ equal to zero and DI equal to zero (except for the 25°C data, where all points are observed).

The second part of the program lists the radial distribution function (RDF) obtained by Fourier inversion of (3.2.1) according to

$$D(r) = 4\pi r^2 \rho_o + (2r/\pi) \int_o^{s_{max}} si(s)M(s)\sin(sr)ds \qquad (3.2.2)$$

where ρ_o is the uniform number density obtained from the literature[16], and M(s) is a modification function included to sharpen the features of the radial distribution Function[17]. The integral in (3.2.2) was evaluated numerically, using the trapezoidal method; summation was done with the increments in s and r listed. The modification function used in this study was

$$M(s) = [\sum_i f_i(s)]^{-2} \qquad (3.2.3)$$

where f refers to the coherent scattering amplitudes of oxygen and hydrogen, and summation is again over the stoichiometric unit. This modification

function removes the average breadth of the distribution of electron density in the atoms. The physical meaning of the function D(r) has been discussed in detail elsewhere[12,17].

The reduced intensity curve, computed from (3.2.1), usually shows a more or less pronounced low frequency perturbation. This perturbation may be caused by incorrect data treatment, by the use of incorrect atomic scattering factors, or by an apparatus function. It will cause a peak at small distances r in the RDF. The perturbation can be removed by repeated Fourier transformations as discussed in ref. 12. The basic assumption is here that there are no atom pair interactions in the RDF at distances r shorter than interatomic distances. In this study, all interactions in the RDF at distances shorter than 2.3 Å were eliminated. This includes O-H interactions around 1 Å about which reliable information cannot be obtained by the x-ray diffraction method, because of the low x-ray scattering amplitude of the one electron in the hydrogen atom.

In the following table the definitions of the terms of the program are again given in the order of appearance.

S	is the angular variable $s = (4\pi/\lambda)\sin\theta$.
SI(S) 1	is the reduced intensity i(s) defined by (3.2.1), multiplied by s and by the modification function M(s) defined in (3.2.2).
SI(S) 2	is the corrected[12] reduced intensity in the same terms as SI(S) 1.
ERROR	is the statistical error associated with SI(S) 2.
DELTA SI(S)	is the difference between SI(S) 1 and SI(S) 2.
R	is the radial distance in Angstrøm.
D1(R)	is the RDF D(r), obtained by Fourier inversion of SI(S) 1.

G1(R) is the pair correlation function $g(r) = D(r)/4\pi r^2\rho_o$, obtained from D1(R).

D2(R) is the RDF D(r), obtained by Fourier inversion of SI(S) 2.

G2(R) is the pair correlation function g(r), obtained from D2(r). The bracketed figures in the columns G2(R) and D2(R) are the standard errors associated with these functions.

All reduced intensity and radial distribution functions listed in this section are in units characteristic of one molecule because of the scaling produced by the modification function (3.2.3).

	S	SI(S) 1	SI(S) 2	ERROR	DELTA SI(S)
2	.077	-.050443	-.107519	.000030	.057075
3	.154	-.099946	-.212137	.000119	.112190
4	.231	-.148321	-.312447	.000270	.163926
5	.309	-.196170	-.407839	.000482	.211669
6	.386	-.242887	-.498349	.000760	.255461
7	.463	-.288560	-.584188	.001105	.295528
8	.540	-.333462	-.665213	.001521	.331751
9	.617	-.377260	-.740626	.002014	.363366
10	.694	-.420007	-.809083	.002588	.389076
11	.771	-.461946	-.869454	.003263	.407508
12	.848	-.502363	-.920157	.004022	.417794
13	.925	-.541433	-.961390	.004882	.419957
14	1.002	-.579041	-.993930	.005853	.414889
15	1.079	-.615054	-1.018992	.006944	.403938
16	1.156	-.649317	-1.037617	.008167	.388300
17	1.233	-.681650	-1.050202	.000706	.368551
18	1.310	-.683921	-1.028480	.000364	.344559
19	1.387	-.665478	-.981303	.000484	.315826
20	1.464	-.617065	-.899155	.000652	.282090
21	1.541	-.524323	-.768166	.000890	.243843
22	1.618	-.388448	-.590940	.001196	.202492
23	1.695	-.201425	-.361867	.001582	.160042
24	1.771	.009815	-.108634	.002012	.118449
25	1.848	.196186	.117218	.002404	.078968
26	1.925	.311269	.269434	.002688	.041834
27	2.002	.352868	.346416	.002862	.006452
28	2.078	.319505	.347498	.002921	-.027992
29	2.155	.261492	.323301	.002945	-.061809
30	2.231	.171682	.266034	.002922	-.094352
31	2.308	.112372	.236475	.002948	-.124104
32	2.384	.069355	.218632	.003002	-.149278
33	2.461	.070556	.239220	.003127	-.168664
34	2.537	.109554	.291838	.003315	-.182284
35	2.614	.169802	.361309	.003539	-.191507
36	2.690	.287044	.485568	.003855	-.198524
37	2.766	.415112	.621507	.004192	-.205395
38	2.842	.569685	.782794	.004573	-.213109
39	2.918	.649272	.870412	.004842	-.221140
40	2.994	.624023	.851750	.004950	-.227727
41	3.070	.442841	.673647	.004815	-.230805
42	3.146	.200541	.429733	.004586	-.229192
43	3.222	-.084465	.139001	.004291	-.223466
44	3.298	-.397961	-.181840	.003949	-.216121
45	3.374	-.623346	-.412470	.003753	-.210876
46	3.450	-.812412	-.601021	.003619	-.211391
47	3.525	-.944053	-.724129	.003581	-.219924
48	3.601	-1.015338	-.778836	.003643	-.236502
49	3.676	-1.052978	-.794029	.006212	-.258949
50	3.827	-1.035274	-.727736	.006920	-.307538
51	3.978	-.898165	-.552628	.007945	-.345537
52	4.128	-.714319	-.335459	.009133	-.378860
53	4.278	-.489007	-.062527	.010418	-.426479
54	4.427	-.320374	.170767	.011739	-.491141
55	4.576	-.185310	.370421	.012968	-.556230
56	4.725	-.085494	.522838	.014158	-.608322
57	4.874	-.082921	.566667	.015104	-.649588
58	5.022	-.171202	.514615	.015889	-.685817
59	5.170	-.280410	.432872	.016667	-.713283
60	5.317	-.471508	.252550	.017245	-.724058
61	5.464	-.681202	.036782	.017831	-.717984
62	5.610	-.844201	-.142208	.018584	-.701993
63	5.757	-1.033585	-.353468	.019263	-.680216
64	5.902	-1.144990	-.493507	.020209	-.651483
65	6.047	-1.112345	-.495975	.021588	-.616370
66	6.192	-1.033397	-.452500	.023114	-.580898
67	6.337	-.928525	-.377280	.024655	-.551245
68	6.480	-.684725	-.156095	.026679	-.528629
69	6.624	-.500776	.011098	.028538	-.511874
70	6.766	-.356419	.145904	.030215	-.502324

D_2O at 4°C

	S	SI(S) 1	SI(S) 2	ERROR	DELTA SI(S)
71	6.909	-.193166	.309883	.031998	-.503046
72	7.051	-.100238	.414014	.033565	-.514252
73	7.192	-.077560	.454965	.034897	-.532526
74	7.332	-.191732	.362975	.035729	-.554707
75	7.473	-.281914	.298287	.036632	-.580201
76	7.612	-.436512	.172146	.037282	-.608658
77	7.751	-.621846	.015511	.037726	-.637356
78	7.890	-.806080	-.143553	.038141	-.662526
79	8.027	-.956882	-.274442	.038595	-.682440
80	8.164	-1.027079	-.329399	.039235	-.697681
81	8.301	-1.099972	-.391376	.039700	-.708596
82	8.437	-1.071266	-.357248	.040532	-.714018
83	8.572	-.975949	-.262986	.041546	-.712962
84	8.707	-.834815	-.128327	.033914	-.706488
85	8.841	-.725324	-.028409	.034650	-.696915
86	8.974	-.554148	.131476	.035642	-.685623
87	9.107	-.511138	.161393	.036169	-.672532
88	9.239	-.403151	.254544	.036887	-.657695
89	9.370	-.346025	.296447	.037414	-.642472
90	9.500	-.351134	.277458	.037776	-.628592
91	9.630	-.415512	.199904	.037948	-.616516
92	9.759	-.445370	.159975	.038211	-.605345
93	9.887	-.500325	.093948	.038395	-.594273
94	10.015	-.580516	.003027	.038498	-.583543
95	10.142	-.663516	-.089782	.038589	-.573735
96	10.268	-.690474	-.125956	.038834	-.564518
97	10.393	-.772007	-.217411	.038936	-.554595
98	10.517	-.774723	-.231842	.039298	-.542881
99	10.641	-.716158	-.185780	.039872	-.529379
100	10.764	-.686250	-.171522	.040437	-.514728
101	10.886	-.614464	-.115350	.041092	-.499115
102	11.007	-.585488	-.103534	.041610	-.481954
103	11.127	-.491108	-.028442	.042341	-.462665
104	11.247	-.389654	.051854	.043098	-.441508
105	11.366	-.355674	.065783	.043686	-.419457
106	11.483	-.295080	.102231	.044279	-.397311
107	11.600	-.231564	.144541	.044871	-.375105
108	11.716	-.191899	.160532	.045356	-.352431
109	11.831	-.156454	.172745	.045756	-.329199
110	11.946	-.131948	.173981	.046176	-.305930
111	12.059	-.152780	.130501	.046445	-.283281
112	12.171	-.186485	.075002	.046674	-.261407
113	12.283	-.220075	.019771	.046963	-.239845
114	12.393	-.266577	-.048572	.047136	-.218005
115	12.503	-.261069	-.065390	.047462	-.195679
116	12.611	-.256164	-.083106	.047766	-.173058
117	12.719	-.265723	-.115401	.048000	-.150322
118	12.826	-.248046	-.120709	.048268	-.127337
119	12.932	-.223671	-.119893	.048592	-.103778
120	13.036	-.217504	-.137988	.048849	-.079516
121	13.140	-.110814	-.056034	.049435	-.054779
122	13.243	-.125128	-.096229	.049611	-.029899
123	13.345	-.072492	-.067590	.050076	-.004902
124	13.445	.002692	-.017854	.050507	.020547
125	13.545	.041870	-.004832	.050789	.046702
126	13.644	.102877	.029746	.051080	.073131
127	13.838	.157785	.036566	.051455	.121220
128	14.028	.240795	.085616	.051804	.155179
129	14.214	.313350	.134587	.052042	.178764
130	14.395	.321768	.123632	.052010	.198137
131	14.572	.274135	.068287	.051817	.205848
132	14.744	.195201	-.000376	.051523	.195577
133	14.913	.081839	-.094227	.051152	.176066
134	15.076	.034579	-.120978	.050907	.155558
135	15.235	.041987	-.087151	.050791	.129138
136	15.389	.023189	-.069675	.050607	.092834
137	15.539	-.025747	-.082262	.050253	.056515
138	15.684	.001774	-.030804	.050066	.032578
139	15.824	.077791	.057914	.049936	.019877
140	15.959	.102956	.096056	.049694	.006900

INTEGRAL(SI(S)*S) = -9.128854E-01

D_2O at 4°C

OBSERVED RADIAL DISTRIBUTION FUNCTIONS (ROF2 = 0 FROM R= 0 TO R= 2.30)

	R	G1(R)	D1(R)	G2(R)		D2(R)	
1	0	1.000E+00	0	1.000E+00	(0)	0	(0)
2	.050	-5.242E+01	-5.476E-02	-3.513E-01	(7.2E+00)	-3.670E-04	(7.5E-03)
3	.100	-4.825E+01	-2.016E-01	-2.469E-01	(5.9E+00)	-1.031E-03	(2.5E-02)
4	.150	-4.169E+01	-3.920E-01	-1.142E-01	(4.1E+00)	-1.073E-03	(3.9E-02)
5	.200	-3.337E+01	-5.578E-01	2.955E-03	(2.3E+00)	4.939E-05	(3.8E-02)
6	.250	-2.413E+01	-6.301E-01	7.126E-02	(1.6E+00)	1.861E-03	(4.1E-02)
7	.300	-1.493E+01	-5.616E-01	8.030E-02	(1.5E+00)	3.020E-03	(5.8E-02)
8	.350	-6.774E+00	-3.467E-01	4.402E-02	(1.4E+00)	2.253E-03	(7.2E-02)
9	.400	-4.477E-01	-2.993E-02	-8.191E-03	(1.1E+00)	-5.476E-04	(7.1E-02)
10	.450	3.589E+00	3.037E-01	-4.633E-02	(8.9E-01)	-3.920E-03	(7.5E-02)
11	.500	5.324E+00	5.562E-01	-5.316E-02	(9.0E-01)	-5.553E-03	(9.4E-02)
12	.550	5.172E+00	6.537E-01	-3.018E-02	(8.8E-01)	-3.815E-03	(1.1E-01)
13	.600	3.845E+00	5.784E-01	5.955E-03	(7.5E-01)	8.957E-04	(1.1E-01)
14	.650	2.146E+00	3.789E-01	3.397E-02	(6.7E-01)	5.997E-03	(1.2E-01)
15	.700	7.508E-01	1.537E-01	3.952E-02	(6.5E-01)	8.090E-03	(1.3E-01)
16	.750	4.721E-02	1.110E-02	2.199E-02	(6.3E-01)	5.168E-03	(1.5E-01)
17	.800	8.482E-02	2.268E-02	-6.512E-03	(5.5E-01)	-1.741E-03	(1.5E-01)
18	.850	6.357E-01	1.919E-01	-2.886E-02	(5.1E-01)	-8.713E-03	(1.5E-01)
19	.900	1.336E+00	4.522E-01	-3.270E-02	(5.1E-01)	-1.107E-02	(1.7E-01)
20	.950	1.849E+00	6.971E-01	-1.694E-02	(4.9E-01)	-6.389E-03	(1.9E-01)
21	1.000	1.982E+00	8.283E-01	8.315E-03	(4.5E-01)	3.474E-03	(1.9E-01)
22	1.050	1.738E+00	8.006E-01	2.804E-02	(4.2E-01)	1.292E-02	(1.9E-01)
23	1.100	1.266E+01	6.399E-01	3.100E-02	(4.2E-01)	1.567E-02	(2.1E-01)
24	1.150	7.755E-01	4.285E-01	1.604E-02	(4.0E-01)	8.862E-03	(2.2E-01)
25	1.200	4.375E-01	2.632E-01	-7.610E-03	(3.7E-01)	-4.579E-03	(2.2E-01)
26	1.250	3.179E-01	2.076E-01	-2.586E-02	(3.5E-01)	-1.688E-02	(2.3E-01)
27	1.300	3.713E-01	2.622E-01	-2.803E-02	(3.5E-01)	-1.979E-02	(2.5E-01)
28	1.350	4.831E-01	3.679E-01	-1.304E-02	(3.4E-01)	-9.926E-03	(2.6E-01)
29	1.400	5.361E-01	4.390E-01	1.004E-02	(3.2E-01)	8.226E-03	(2.6E-01)
30	1.450	4.675E-01	4.107E-01	2.728E-02	(3.1E-01)	2.397E-02	(2.7E-01)
31	1.500	2.918E-01	2.743E-01	2.811E-02	(3.1E-01)	2.643E-02	(2.9E-01)
32	1.550	8.497E-02	8.529E-02	1.165E-02	(3.0E-01)	1.169E-02	(3.0E-01)
33	1.600	-5.989E-02	-5.405E-02	-1.255E-02	(2.8E-01)	-1.343E-02	(3.0E-01)
34	1.650	-7.927E-02	-9.017E-02	-2.992E-02	(2.7E-01)	-3.404E-02	(3.1E-01)
35	1.700	3.211E-02	3.877E-02	-2.949E-02	(2.7E-01)	-3.561E-02	(3.3E-01)
36	1.750	2.232E-01	2.856E-01	-1.071E-02	(2.6E-01)	-1.370E-02	(3.4E-01)
37	1.800	4.143E-01	5.608E-01	1.556E-02	(2.5E-01)	2.120E-02	(3.4E-01)
38	1.850	5.359E-01	7.662E-01	3.339E-02	(2.4E-01)	4.775E-02	(3.5E-01)
39	1.900	5.580E-01	8.416E-01	3.041E-02	(2.4E-01)	4.588E-02	(3.6E-01)
40	1.950	4.993E-01	7.932E-01	6.647E-03	(2.3E-01)	1.056E-02	(3.7E-01)
41	2.000	4.108E-01	6.866E-01	-2.474E-02	(2.2E-01)	-4.134E-02	(3.7E-01)
42	2.050	3.468E-01	6.090E-01	-4.400E-02	(2.2E-01)	-7.726E-02	(3.9E-01)
43	2.100	3.362E-01	6.195E-01	-3.628E-02	(2.2E-01)	-6.685E-02	(4.0E-01)
44	2.150	3.692E-01	7.131E-01	-1.492E-03	(2.1E-01)	-2.882E-03	(4.1E-01)
45	2.200	4.052E-01	8.194E-01	4.355E-02	(2.0E-01)	8.807E-02	(4.1E-01)
46	2.250	3.967E-01	8.390E-01	7.322E-02	(2.0E-01)	1.549E-01	(4.2E-01)
47	2.300	3.179E-01	7.027E-01	6.841E-02	(2.0E-01)	1.512E-01	(4.4E-01)
48	2.350	1.838E-01	4.242E-01	3.165E-02	(1.9E-01)	7.303E-02	(4.4E-01)
49	2.400	4.994E-02	1.202E-01	-6.419E-03	(1.9E-01)	-1.545E-02	(4.5E-01)
50	2.450	-7.444E-03	-1.867E-02	5.865E-03	(1.8E-01)	1.471E-02	(4.6E-01)
51	2.500	7.816E-02	2.041E-01	1.218E-01	(1.8E-01)	3.180E-01	(4.8E-01)
52	2.550	3.345E-01	9.088E-01	3.722E-01	(1.8E-01)	1.011E+00	(4.8E-01)
53	2.600	7.358E-01	2.078E+00	7.474E-01	(1.7E-01)	2.111E+00	(4.8E-01)
54	2.650	1.209E+00	3.547E+00	1.194E+00	(1.7E-01)	3.503E+00	(4.9E-01)
55	2.700	1.656E+00	5.043E+00	1.628E+00	(1.7E-01)	4.960E+00	(5.2E-01)
56	2.750	1.986E+00	6.276E+00	1.954E+00	(1.6E-01)	6.206E+00	(5.2E-01)
57	2.800	2.146E+00	7.030E+00	2.140E+00	(1.6E-01)	7.009E+00	(5.2E-01)
58	2.850	2.129E+00	7.224E+00	2.138E+00	(1.6E-01)	7.257E+00	(5.4E-01)
59	2.900	1.972E+00	6.929E+00	1.989E+00	(1.6E-01)	6.989E+00	(5.5E-01)
60	2.950	1.739E+00	6.325E+00	1.753E+00	(1.5E-01)	6.373E+00	(5.5E-01)
61	3.000	1.496E+00	5.626E+00	1.499E+00	(1.5E-01)	5.636E+00	(5.6E-01)
62	3.050	1.288E+00	5.007E+00	1.280E+00	(1.5E-01)	4.977E+00	(5.7E-01)
63	3.100	1.135E+00	4.557E+00	1.123E+00	(1.5E-01)	4.511E+00	(5.9E-01)
64	3.150	1.032E+00	4.278E+00	1.024E+00	(1.4E-01)	4.246E+00	(5.9E-01)
65	3.200	9.625E-01	4.118E+00	9.632E-01	(1.4E-01)	4.121E+00	(6.0E-01)
66	3.250	9.104E-01	4.019E+00	9.190E-01	(1.4E-01)	4.056E+00	(6.1E-01)
67	3.300	8.691E-01	3.955E+00	8.803E-01	(1.4E-01)	4.005E+00	(6.2E-01)
68	3.350	8.404E-01	3.941E+00	8.484E-01	(1.3E-01)	3.978E+00	(6.3E-01)

D_2O at 4°C

	R	G1(R)	D1(R)	G2(R)		D2(R)	
69	3.400	8.306E-01	4.012E+00	8.323E-01	(1.3E-01)	4.020E+00	(6.3E-01)
70	3.450	8.428E-01	4.192E+00	8.389E-01	(1.3E-01)	4.172E+00	(6.5E-01)
71	3.500	8.725E-01	4.466E+00	8.658E-01	(1.3E-01)	4.437E+00	(6.6E-01)
72	3.550	9.078E-01	4.780E+00	9.047E-01	(1.3E-01)	4.764E+00	(6.7E-01)
73	3.600	9.353E-01	5.065E+00	9.370E-01	(1.2E-01)	5.074E+00	(6.8E-01)
74	3.650	9.462E-01	5.267E+00	9.519E-01	(1.2E-01)	5.299E+00	(6.9E-01)
75	3.700	9.407E-01	5.381E+00	9.471E-01	(1.2E-01)	5.418E+00	(7.0E-01)
76	3.750	9.272E-01	5.448E+00	9.310E-01	(1.2E-01)	5.470E+00	(7.0E-01)
77	3.800	9.179E-01	5.538E+00	9.172E-01	(1.2E-01)	5.534E+00	(7.1E-01)
78	3.850	9.223E-01	5.712E+00	9.180E-01	(1.2E-01)	5.685E+00	(7.3E-01)
79	3.900	9.425E-01	5.990E+00	9.372E-01	(1.2E-01)	5.956E+00	(7.5E-01)
80	3.950	9.729E-01	6.343E+00	9.694E-01	(1.1E-01)	6.320E+00	(7.4E-01)
81	4.000	1.004E+00	6.712E+00	1.004E+00	(1.1E-01)	6.710E+00	(7.5E-01)
82	4.050	1.027E+00	7.041E+00	1.029E+00	(1.1E-01)	7.055E+00	(7.6E-01)
83	4.100	1.040E+00	7.308E+00	1.043E+00	(1.1E-01)	7.324E+00	(7.8E-01)
84	4.150	1.047E+00	7.535E+00	1.047E+00	(1.1E-01)	7.538E+00	(7.8E-01)
85	4.200	1.055E+00	7.777E+00	1.053E+00	(1.1E-01)	7.758E+00	(7.8E-01)
86	4.250	1.071E+00	8.081E+00	1.066E+00	(1.1E-01)	8.045E+00	(8.0E-01)
87	4.300	1.095E+00	8.461E+00	1.090E+00	(1.1E-01)	8.422E+00	(8.2E-01)
88	4.350	1.123E+00	8.882E+00	1.120E+00	(1.0E-01)	8.856E+00	(8.2E-01)
89	4.400	1.147E+00	9.276E+00	1.146E+00	(1.0E-01)	9.270E+00	(8.3E-01)
90	4.450	1.157E+00	9.575E+00	1.159E+00	(1.0E-01)	9.586E+00	(8.4E-01)
91	4.500	1.153E+00	9.752E+00	1.154E+00	(1.0E-01)	9.767E+00	(8.6E-01)
92	4.550	1.137E+00	9.831E+00	1.137E+00	(9.9E-02)	9.837E+00	(8.5E-01)
93	4.600	1.118E+00	9.880E+00	1.116E+00	(9.8E-02)	9.871E+00	(8.7E-01)
94	4.650	1.104E+00	9.976E+00	1.102E+00	(9.7E-02)	9.955E+00	(8.8E-01)
95	4.700	1.101E+00	1.016E+01	1.099E+00	(9.6E-02)	1.014E+01	(8.8E-01)
96	4.750	1.106E+00	1.042E+01	1.105E+00	(9.4E-02)	1.042E+01	(8.9E-01)
97	4.800	1.112E+00	1.071E+01	1.114E+00	(9.4E-02)	1.072E+01	(9.0E-01)
98	4.850	1.112E+00	1.093E+01	1.115E+00	(9.3E-02)	1.096E+01	(9.1E-01)
99	4.900	1.099E+00	1.103E+01	1.103E+00	(9.1E-02)	1.106E+01	(9.2E-01)
100	4.950	1.075E+00	1.101E+01	1.078E+00	(9.0E-02)	1.103E+01	(9.2E-01)
101	5.000	1.044E+00	1.091E+01	1.045E+00	(9.0E-02)	1.092E+01	(9.4E-01)
102	5.050	1.014E+00	1.081E+01	1.015E+00	(9.0E-02)	1.081E+01	(9.6E-01)
103	5.100	9.914E-01	1.077E+01	9.915E-01	(8.8E-02)	1.078E+01	(9.6E-01)
104	5.150	9.773E-01	1.083E+01	9.782E-01	(8.6E-02)	1.084E+01	(9.5E-01)
105	5.200	9.693E-01	1.095E+01	9.714E-01	(8.6E-02)	1.098E+01	(9.8E-01)
106	5.250	9.622E-01	1.108E+01	9.650E-01	(8.6E-02)	1.111E+01	(9.9E-01)
107	5.300	9.509E-01	1.116E+01	9.535E-01	(8.5E-02)	1.119E+01	(9.9E-01)
108	5.350	9.335E-01	1.116E+01	9.353E-01	(8.4E-02)	1.119E+01	(1.0E+00)
109	5.400	9.121E-01	1.111E+01	9.125E-01	(8.4E-02)	1.112E+01	(1.0E+00)
110	5.450	8.911E-01	1.106E+01	8.905E-01	(8.2E-02)	1.105E+01	(1.0E+00)
111	5.500	8.755E-01	1.107E+01	8.746E-01	(8.3E-02)	1.105E+01	(1.0E+00)
112	5.550	8.683E-01	1.118E+01	8.676E-01	(8.1E-02)	1.117E+01	(1.0E+00)
113	5.600	8.694E-01	1.139E+01	8.692E-01	(8.0E-02)	1.139E+01	(1.0E+00)
114	5.650	8.762E-01	1.169E+01	8.763E-01	(8.1E-02)	1.169E+01	(1.1E+00)
115	5.700	8.851E-01	1.202E+01	8.849E-01	(7.9E-02)	1.201E+01	(1.1E+00)
116	5.750	8.932E-01	1.234E+01	8.923E-01	(7.8E-02)	1.233E+01	(1.1E+00)
117	5.800	8.993E-01	1.264E+01	8.975E-01	(7.8E-02)	1.262E+01	(1.1E+00)
118	5.850	9.040E-01	1.293E+01	9.016E-01	(7.8E-02)	1.289E+01	(1.1E+00)
119	5.900	9.088E-01	1.322E+01	9.053E-01	(7.6E-02)	1.318E+01	(1.1E+00)
120	5.950	9.149E-01	1.353E+01	9.128E-01	(7.6E-02)	1.350E+01	(1.1E+00)
121	6.000	9.229E-01	1.388E+01	9.214E-01	(7.6E-02)	1.386E+01	(1.1E+00)
122	6.050	9.326E-01	1.426E+01	9.316E-01	(7.4E-02)	1.425E+01	(1.1E+00)
123	6.100	9.433E-01	1.467E+01	9.424E-01	(7.4E-02)	1.465E+01	(1.2E+00)
124	6.150	9.545E-01	1.508E+01	9.533E-01	(7.4E-02)	1.507E+01	(1.2E+00)
125	6.200	9.659E-01	1.551E+01	9.645E-01	(7.2E-02)	1.549E+01	(1.2E+00)
126	6.250	9.778E-01	1.596E+01	9.763E-01	(7.2E-02)	1.594E+01	(1.2E+00)
127	6.300	9.899E-01	1.642E+01	9.888E-01	(7.2E-02)	1.640E+01	(1.2E+00)
128	6.350	1.002E+00	1.688E+01	1.002E+00	(7.0E-02)	1.688E+01	(1.2E+00)
129	6.400	1.014E+00	1.735E+01	1.014E+00	(7.1E-02)	1.736E+01	(1.2E+00)
130	6.450	1.024E+00	1.780E+01	1.025E+00	(7.0E-02)	1.782E+01	(1.2E+00)
131	6.500	1.033E+00	1.823E+01	1.034E+00	(6.9E-02)	1.825E+01	(1.2E+00)
132	6.550	1.039E+00	1.863E+01	1.040E+00	(6.8E-02)	1.865E+01	(1.2E+00)
133	6.600	1.044E+00	1.901E+01	1.045E+00	(6.8E-02)	1.902E+01	(1.2E+00)
134	6.650	1.048E+00	1.936E+01	1.049E+00	(6.8E-02)	1.938E+01	(1.3E+00)
135	6.700	1.050E+00	1.970E+01	1.051E+00	(6.7E-02)	1.972E+01	(1.3E+00)
136	6.750	1.052E+00	2.002E+01	1.053E+00	(6.6E-02)	2.005E+01	(1.3E+00)

D_2O at 4°C

	R	G1(R)	D1(R)	G2(R)		D2(R)	
137	6.800	1.052E+00	2.033E+01	1.054E+00	(6.6E-02)	2.037E+01	(1.3E+00)
138	6.850	1.053E+00	2.064E+01	1.055E+00	(6.6E-02)	2.069E+01	(1.3E+00)
139	6.900	1.053E+00	2.095E+01	1.056E+00	(6.5E-02)	2.100E+01	(1.3E+00)
140	6.950	1.054E+00	2.127E+01	1.056E+00	(6.4E-02)	2.131E+01	(1.3E+00)
141	7.000	1.054E+00	2.159E+01	1.056E+00	(6.5E-02)	2.161E+01	(1.3E+00)
142	7.050	1.054E+00	2.188E+01	1.055E+00	(6.4E-02)	2.190E+01	(1.3E+00)
143	7.100	1.051E+00	2.214E+01	1.052E+00	(6.3E-02)	2.215E+01	(1.3E+00)
144	7.150	1.046E+00	2.234E+01	1.046E+00	(6.2E-02)	2.235E+01	(1.3E+00)
145	7.200	1.038E+00	2.248E+01	1.038E+00	(6.3E-02)	2.249E+01	(1.4E+00)
146	7.250	1.029E+00	2.260E+01	1.029E+00	(6.3E-02)	2.261E+01	(1.4E+00)
147	7.300	1.021E+00	2.273E+01	1.021E+00	(6.1E-02)	2.273E+01	(1.4E+00)
148	7.350	1.015E+00	2.291E+01	1.015E+00	(6.1E-02)	2.290E+01	(1.4E+00)
149	7.400	1.012E+00	2.315E+01	1.011E+00	(6.1E-02)	2.313E+01	(1.4E+00)
150	7.450	1.010E+00	2.343E+01	1.009E+00	(6.1E-02)	2.339E+01	(1.4E+00)
151	7.500	1.009E+00	2.371E+01	1.007E+00	(6.0E-02)	2.366E+01	(1.4E+00)
152	7.550	1.005E+00	2.394E+01	1.003E+00	(6.0E-02)	2.390E+01	(1.4E+00)
153	7.600	9.990E-01	2.411E+01	9.973E-01	(5.9E-02)	2.407E+01	(1.4E+00)
154	7.650	9.909E-01	2.423E+01	9.894E-01	(5.9E-02)	2.419E+01	(1.5E+00)
155	7.700	9.831E-01	2.435E+01	9.817E-01	(5.8E-02)	2.432E+01	(1.4E+00)
156	7.750	9.780E-01	2.454E+01	9.765E-01	(5.8E-02)	2.451E+01	(1.5E+00)
157	7.800	9.770E-01	2.484E+01	9.755E-01	(5.9E-02)	2.480E+01	(1.5E+00)
158	7.850	9.800E-01	2.523E+01	9.783E-01	(5.7E-02)	2.519E+01	(1.5E+00)
159	7.900	9.850E-01	2.569E+01	9.834E-01	(5.8E-02)	2.564E+01	(1.5E+00)
160	7.950	9.894E-01	2.613E+01	9.881E-01	(5.5E-02)	2.609E+01	(1.5E+00)
161	8.000	9.912E-01	2.651E+01	9.905E-01	(5.7E-02)	2.649E+01	(1.5E+00)
162	8.050	9.901E-01	2.681E+01	9.900E-01	(5.5E-02)	2.681E+01	(1.5E+00)
163	8.100	9.875E-01	2.707E+01	9.878E-01	(5.6E-02)	2.708E+01	(1.5E+00)
164	8.150	9.854E-01	2.735E+01	9.860E-01	(5.5E-02)	2.737E+01	(1.5E+00)
165	8.200	9.856E-01	2.769E+01	9.854E-01	(5.5E-02)	2.771E+01	(1.5E+00)
166	8.250	9.888E-01	2.812E+01	9.896E-01	(5.5E-02)	2.814E+01	(1.6E+00)
167	8.300	9.936E-01	2.860E+01	9.945E-01	(5.3E-02)	2.862E+01	(1.5E+00)
168	8.350	9.980E-01	2.907E+01	9.991E-01	(5.4E-02)	2.911E+01	(1.6E+00)
169	8.400	1.000E+00	2.949E+01	1.002E+00	(5.3E-02)	2.953E+01	(1.5E+00)
170	8.450	1.000E+00	2.983E+01	1.002E+00	(5.4E-02)	2.989E+01	(1.6E+00)
171	8.500	9.979E-01	3.013E+01	1.000E+00	(5.3E-02)	3.019E+01	(1.6E+00)
172	8.550	9.960E-01	3.042E+01	9.982E-01	(5.3E-02)	3.049E+01	(1.6E+00)
173	8.600	9.950E-01	3.078E+01	9.979E-01	(5.3E-02)	3.084E+01	(1.6E+00)
174	8.650	9.982E-01	3.121E+01	9.998E-01	(5.2E-02)	3.126E+01	(1.6E+00)
175	8.700	1.002E+00	3.159E+01	1.003E+00	(5.3E-02)	3.173E+01	(1.7E+00)
176	8.750	1.006E+00	3.218E+01	1.007E+00	(5.0E-02)	3.220E+01	(1.6E+00)
177	8.800	1.008E+00	3.251E+01	1.009E+00	(5.2E-02)	3.264E+01	(1.7E+00)
178	8.850	1.008E+00	3.298E+01	1.009E+00	(4.9E-02)	3.301E+01	(1.6E+00)
179	8.900	1.006E+00	3.330E+01	1.007E+00	(5.2E-02)	3.332E+01	(1.7E+00)
180	8.950	1.004E+00	3.351E+01	1.005E+00	(4.9E-02)	3.362E+01	(1.6E+00)
181	9.000	1.003E+00	3.394E+01	1.003E+00	(5.1E-02)	3.394E+01	(1.7E+00)
182	9.050	1.003E+00	3.432E+01	1.002E+00	(4.9E-02)	3.430E+01	(1.7E+00)
183	9.100	1.003E+00	3.471E+01	1.002E+00	(5.0E-02)	3.467E+01	(1.7E+00)
184	9.150	1.003E+00	3.509E+01	1.001E+00	(5.0E-02)	3.503E+01	(1.7E+00)
185	9.200	1.001E+00	3.540E+01	9.994E-01	(4.9E-02)	3.534E+01	(1.7E+00)
186	9.250	9.979E-01	3.568E+01	9.963E-01	(4.9E-02)	3.562E+01	(1.8E+00)
187	9.300	9.946E-01	3.594E+01	9.931E-01	(4.7E-02)	3.589E+01	(1.7E+00)
188	9.350	9.926E-01	3.626E+01	9.912E-01	(4.9E-02)	3.621E+01	(1.8E+00)
189	9.400	9.928E-01	3.655E+01	9.913E-01	(4.7E-02)	3.660E+01	(1.8E+00)
190	9.450	9.950E-01	3.713E+01	9.933E-01	(4.8E-02)	3.706E+01	(1.8E+00)
191	9.500	9.977E-01	3.762E+01	9.958E-01	(4.7E-02)	3.755E+01	(1.8E+00)
192	9.550	9.991E-01	3.807E+01	9.971E-01	(4.7E-02)	3.800E+01	(1.8E+00)
193	9.600	9.979E-01	3.843E+01	9.952E-01	(4.7E-02)	3.836E+01	(1.8E+00)
194	9.650	9.943E-01	3.869E+01	9.932E-01	(4.7E-02)	3.864E+01	(1.8E+00)
195	9.700	9.896E-01	3.891E+01	9.893E-01	(4.6E-02)	3.889E+01	(1.8E+00)
196	9.750	9.862E-01	3.917E+01	9.864E-01	(4.7E-02)	3.918E+01	(1.9E+00)
197	9.800	9.855E-01	3.955E+01	9.860E-01	(4.5E-02)	3.957E+01	(1.8E+00)
198	9.850	9.879E-01	4.005E+01	9.884E-01	(4.6E-02)	4.007E+01	(1.9E+00)
199	9.900	9.924E-01	4.054E+01	9.924E-01	(4.4E-02)	4.064E+01	(1.8E+00)
200	9.950	9.970E-01	4.124E+01	9.964E-01	(4.5E-02)	4.122E+01	(1.9E+00)
201	10.000	9.999E-01	4.178E+01	9.990E-01	(4.4E-02)	4.174E+01	(1.9E+00)

INTEGRAL(G(R)-1) = -2.259999E+00
(G(R)-1)*R**2 = -3.614556E+00

D_2O at 4°C

	S	SI(S) 1	SI(S) 2	ERROR	DELTA SI(S)
2	.077	-.050358	-.105132	.000034	.054774
3	.154	-.099603	-.207333	.000136	.107731
4	.231	-.147744	-.305355	.000307	.157611
5	.309	-.194780	-.398762	.000549	.203982
6	.386	-.240700	-.487768	.000865	.247068
7	.463	-.285480	-.572734	.001258	.287254
8	.540	-.329086	-.653615	.001732	.324529
9	.617	-.371471	-.729666	.002292	.358195
10	.694	-.412572	-.799563	.002946	.386991
11	.771	-.452578	-.862163	.003714	.409585
12	.848	-.490820	-.915986	.004578	.425166
13	.925	-.527426	-.961239	.005558	.433813
14	1.002	-.562255	-.998708	.006662	.436453
15	1.079	-.595146	-1.029543	.007904	.434397
16	1.156	-.625910	-1.054647	.009296	.428737
17	1.233	-.654327	-1.074215	.000820	.419888
18	1.310	-.655665	-1.063215	.000413	.407550
19	1.387	-.628169	-1.019266	.000551	.391097
20	1.464	-.571940	-.942124	.000735	.370184
21	1.541	-.471263	-.816503	.000990	.345241
22	1.618	-.320865	-.638445	.001326	.317579
23	1.695	-.108055	-.397085	.001763	.289030
24	1.771	.131103	-.130189	.002246	.261291
25	1.848	.363475	.128153	.002720	.235322
26	1.925	.519953	.308855	.003076	.211099
27	2.002	.588419	.400546	.003295	.187872
28	2.078	.578419	.413631	.003392	.164789
29	2.155	.500670	.359109	.003384	.141561
30	2.231	.406130	.287303	.003351	.118827
31	2.308	.373398	.275405	.003419	.097993
32	2.384	.332243	.251631	.003475	.080613
33	2.461	.320874	.253255	.003582	.067619
34	2.537	.353116	.294325	.003762	.058791
35	2.614	.427099	.374353	.004011	.052746
36	2.690	.546933	.499438	.004337	.047495
37	2.766	.683671	.642357	.004691	.041314
38	2.842	.803175	.769662	.005024	.033513
39	2.918	.875269	.850538	.005284	.024731
40	2.994	.852282	.835696	.005395	.016586
41	3.070	.689672	.678859	.005284	.010813
42	3.146	.415573	.407282	.004994	.008291
43	3.222	.096140	.087755	.004632	.008385
44	3.298	-.207092	-.216031	.004294	.008939
45	3.374	-.443951	-.450886	.004070	.006935
46	3.450	-.624703	-.624274	.003942	-.000429
47	3.525	-.746711	-.732002	.003913	-.014709
48	3.601	-.825959	-.790317	.003957	-.035642
49	3.676	-.888970	-.827698	.006682	-.061272
50	3.827	-.839581	-.724373	.007480	-.115208
51	3.978	-.705330	-.545058	.008538	-.160272
52	4.128	-.528243	-.327998	.009753	-.200245
53	4.278	-.295858	-.047440	.011096	-.248417
54	4.427	-.112146	.194074	.012408	-.306221
55	4.576	.078513	.439470	.013796	-.360957
56	4.725	.112638	.514432	.014801	-.401793
57	4.874	.102163	.531540	.015701	-.429377
58	5.022	.109897	.558394	.016734	-.448496
59	5.170	-.032396	.425866	.017397	-.458261
60	5.317	-.209647	.244438	.017984	-.454085
61	5.464	-.419623	.016446	.018536	-.436069
62	5.610	-.580728	-.170299	.019263	-.410430
63	5.757	-.752589	-.369592	.019958	-.382997
64	5.902	-.859876	-.504551	.020886	-.355325
65	6.047	-.824671	-.496352	.022254	-.328319
66	6.192	-.806438	-.499956	.023584	-.306481
67	6.337	-.623215	-.327393	.025349	-.295822
68	6.480	-.487640	-.188792	.027045	-.298848
69	6.624	-.303153	.011037	.028898	-.314191

H_2O at 4°C

	S	SI(S) 1	SI(S) 2	ERROR	DELTA SI(S)
70	6.766	-.125326	.215500	.030672	-.340826
71	6.909	-.032172	.347782	.032232	-.379954
72	7.051	-.034086	.397708	.033491	-.431794
73	7.192	-.057850	.434854	.034658	-.492704
74	7.332	-.126168	.431175	.035612	-.557343
75	7.473	-.303454	.319176	.036214	-.622631
76	7.612	-.533771	.153877	.036593	-.687648
77	7.751	-.765455	-.015291	.036860	-.750164
78	7.890	-1.008348	-.202708	.037056	-.805640
79	8.027	-1.162765	-.312282	.037478	-.850483
80	8.164	-1.274799	-.390162	.037968	-.884637
81	8.301	-1.292556	-.382886	.038617	-.909670
82	8.437	-1.243414	-.317959	.039525	-.925456
83	8.572	-1.185302	-.254803	.040425	-.930499
84	8.707	-1.026156	-.100946	.034797	-.925210
85	8.841	-.882294	.030644	.035669	-.912938
86	8.974	-.783808	.113267	.036508	-.897076
87	9.107	-.644408	.233998	.037385	-.878406
88	9.239	-.637111	.219294	.037852	-.856405
89	9.370	-.544816	.287476	.038536	-.832292
90	9.500	-.556505	.252688	.038913	-.809193
91	9.630	-.560621	.228514	.039303	-.789135
92	9.759	-.644154	.127064	.039421	-.771218
93	9.887	-.717885	.035618	.039570	-.753503
94	10.015	-.706539	.029350	.039990	-.735889
95	10.142	-.826291	-.106299	.039981	-.719992
96	10.268	-.871869	-.165493	.040197	-.706376
97	10.393	-.891435	-.198340	.040525	-.693095
98	10.517	-.839026	-.161442	.041111	-.677584
99	10.641	-.858847	-.199507	.041474	-.659340
100	10.764	-.801752	-.161858	.042178	-.639895
101	10.886	-.754115	-.133842	.042805	-.620273
102	11.007	-.684078	-.084718	.043508	-.599360
103	11.127	-.611237	-.035990	.044224	-.575247
104	11.247	-.502224	.045506	.045067	-.547730
105	11.366	-.431065	.087709	.045821	-.518774
106	11.483	-.381881	.108536	.046429	-.490417
107	11.600	-.328295	.134462	.047031	-.462758
108	11.716	-.288126	.146253	.047562	-.434379
109	11.831	-.240946	.163605	.048039	-.404551
110	11.946	-.200503	.173991	.048552	-.374495
111	12.059	-.210903	.135378	.048884	-.346281
112	12.171	-.233916	.086818	.049173	-.320734
113	12.283	-.270481	.026254	.049478	-.296735
114	12.393	-.321485	-.048893	.049653	-.272592
115	12.503	-.304690	-.056843	.050048	-.247847
116	12.611	-.305189	-.081628	.050358	-.223560
117	12.719	-.334427	-.133500	.050543	-.200927
118	12.826	-.367270	-.187422	.050652	-.179848
119	12.932	-.284565	-.125610	.051210	-.158955
120	13.036	-.269638	-.132703	.051520	-.136935
121	13.140	-.226077	-.112418	.051927	-.113658
122	13.243	-.119007	-.029034	.052552	-.089972
123	13.345	-.151909	-.085410	.052745	-.066498
124	13.445	-.088817	-.046014	.053167	-.042803
125	13.545	.020540	.038414	.053718	-.017874
126	13.644	.086452	.077896	.051751	.008556
127	13.838	.183199	.123582	.052178	.059617
128	14.028	.201243	.104105	.052348	.097138
129	14.214	.208193	.079536	.052416	.128658
130	14.395	.224440	.060237	.052423	.164203
131	14.572	.199414	.010898	.052311	.188517
132	14.744	.136551	-.054483	.052073	.191034
133	14.913	.081669	-.105677	.051883	.187345
134	15.076	.139270	-.046840	.051953	.186110
135	15.235	.076546	-.095933	.051637	.172479
136	15.389	.117975	-.022201	.051629	.140176
137	15.539	.066776	-.041912	.051266	.108688
138	15.684	.157074	.061593	.051255	.095481
139	15.824	.167192	.075366	.050947	.091827
140	15.959	.239946	.162717	.050833	.077228

INTEGRAL (SI(S)*S) = -5.467628E+01

H_2O at 4°C

OBSERVED RADIAL DISTRIBUTION FUNCTIONS (RDF2 = 0 FROM R= 0 TO R= 2.30)

	R	G1(R)	D1(R)	G2(R)		D2(R)	
1	0	1.000E+00	0	1.000E+00	(0)	0	(0)
2	.050	-5.443E+01	-5.719E-02	1.534E-01	(7.3E+00)	1.612E-04	(7.7E-03)
3	.100	-4.937E+01	-2.075E-01	1.055E-01	(6.0E+00)	4.435E-04	(2.5E-02)
4	.150	-4.148E+01	-3.922E-01	4.552E-02	(4.2E+00)	4.304E-04	(4.0E-02)
5	.200	-3.157E+01	-5.307E-01	-6.234E-03	(2.3E+00)	-1.048E-04	(3.9E-02)
6	.250	-2.074E+01	-5.448E-01	-3.504E-02	(1.6E+00)	-9.203E-04	(4.2E-02)
7	.300	-1.025E+01	-3.878E-01	-3.736E-02	(1.6E+00)	-1.413E-03	(5.9E-02)
8	.350	-1.319E+00	-6.789E-02	-2.074E-02	(1.4E+00)	-1.068E-03	(7.4E-02)
9	.400	5.122E+00	3.444E-01	1.206E-03	(1.1E+00)	8.108E-05	(7.4E-02)
10	.450	8.615E+00	7.331E-01	1.597E-02	(9.2E-01)	1.359E-03	(7.8E-02)
11	.500	9.294E+00	9.764E-01	1.766E-02	(9.2E-01)	1.855E-03	(9.7E-02)
12	.550	7.819E+00	9.939E-01	8.483E-03	(8.9E-01)	1.078E-03	(1.1E-01)
13	.600	5.178E+00	7.833E-01	-4.067E-03	(7.6E-01)	-6.152E-04	(1.2E-01)
14	.650	2.401E+00	4.263E-01	-1.220E-02	(6.8E-01)	-2.166E-03	(1.2E-01)
15	.700	2.866E-01	5.901E-02	-1.211E-02	(6.7E-01)	-2.494E-03	(1.4E-01)
16	.750	-7.733E-01	-1.828E-01	-5.335E-03	(6.4E-01)	-1.261E-03	(1.5E-01)
17	.800	-8.141E-01	-2.189E-01	3.054E-03	(5.6E-01)	8.215E-04	(1.5E-01)
18	.850	-1.842E-01	-5.592E-02	7.974E-03	(5.2E-01)	2.421E-03	(1.6E-01)
19	.900	6.518E-01	2.219E-01	7.283E-03	(5.2E-01)	2.479E-03	(1.8E-01)
20	.950	1.306E+00	4.953E-01	2.558E-03	(5.0E-01)	9.702E-04	(1.9E-01)
21	1.000	1.587E+00	6.670E-01	-2.480E-03	(4.5E-01)	-1.042E-03	(1.9E-01)
22	1.050	1.517E+00	7.029E-01	-4.600E-03	(4.3E-01)	-2.131E-03	(2.0E-01)
23	1.100	1.257E+00	6.391E-01	-3.004E-03	(4.3E-01)	-1.527E-03	(2.2E-01)
24	1.150	9.949E-01	5.529E-01	5.532E-04	(4.1E-01)	3.074E-04	(2.3E-01)
25	1.200	8.503E-01	5.145E-01	3.310E-03	(3.8E-01)	2.003E-03	(2.3E-01)
26	1.250	8.326E-01	5.467E-01	3.516E-03	(3.6E-01)	2.309E-03	(2.4E-01)
27	1.300	8.635E-01	6.132E-01	1.517E-03	(3.6E-01)	1.077E-03	(2.5E-01)
28	1.350	8.379E-01	6.417E-01	-7.596E-04	(3.5E-01)	-5.817E-04	(2.7E-01)
29	1.400	6.884E-01	5.670E-01	-1.417E-03	(3.2E-01)	-1.167E-03	(2.7E-01)
30	1.450	4.200E-01	3.711E-01	-8.359E-05	(3.1E-01)	-7.385E-05	(2.8E-01)
31	1.500	1.033E-01	9.769E-02	1.836E-03	(3.1E-01)	1.736E-03	(3.0E-01)
32	1.550	-1.642E-01	-1.658E-01	2.326E-03	(3.0E-01)	2.349E-03	(3.1E-01)
33	1.600	-3.060E-01	-3.292E-01	4.847E-04	(2.8E-01)	5.214E-04	(3.1E-01)
34	1.650	-2.984E-01	-3.414E-01	-2.537E-03	(2.8E-01)	-2.903E-03	(3.2E-01)
35	1.700	-1.744E-01	-2.118E-01	-4.200E-03	(2.8E-01)	-5.101E-03	(3.4E-01)
36	1.750	-7.912E-04	-1.018E-03	-2.524E-03	(2.7E-01)	-3.249E-03	(3.5E-01)
37	1.800	1.555E-01	2.117E-01	2.047E-03	(2.5E-01)	2.787E-03	(3.4E-01)
38	1.850	2.554E-01	3.674E-01	6.381E-03	(2.5E-01)	9.178E-03	(3.6E-01)
39	1.900	2.975E-01	4.512E-01	6.533E-03	(2.5E-01)	9.911E-03	(3.7E-01)
40	1.950	3.078E-01	4.919E-01	7.843E-04	(2.4E-01)	1.253E-03	(3.8E-01)
41	2.000	3.194E-01	5.368E-01	-8.236E-03	(2.3E-01)	-1.384E-02	(3.8E-01)
42	2.050	3.510E-01	6.198E-01	-1.421E-02	(2.2E-01)	-2.510E-02	(4.0E-01)
43	2.100	3.977E-01	7.369E-01	-1.087E-02	(2.2E-01)	-2.015E-02	(4.1E-01)
44	2.150	4.345E-01	8.441E-01	3.151E-03	(2.2E-01)	6.121E-03	(4.2E-01)
45	2.200	4.312E-01	8.769E-01	2.158E-02	(2.1E-01)	4.389E-02	(4.2E-01)
46	2.250	3.688E-01	7.847E-01	3.267E-02	(2.0E-01)	6.951E-02	(4.3E-01)
47	2.300	2.530E-01	5.625E-01	2.666E-02	(2.0E-01)	5.927E-02	(4.5E-01)
48	2.350	1.159E-01	2.689E-01	5.447E-03	(2.0E-01)	1.264E-02	(4.6E-01)
49	2.400	8.549E-03	2.069E-02	-1.074E-02	(1.9E-01)	-2.600E-02	(4.6E-01)
50	2.450	-1.362E-02	-3.435E-02	1.529E-02	(1.9E-01)	3.858E-02	(4.7E-01)
51	2.500	9.155E-02	2.405E-01	1.265E-01	(1.9E-01)	3.323E-01	(4.9E-01)
52	2.550	3.387E-01	9.255E-01	3.538E-01	(1.8E-01)	9.668E-01	(5.0E-01)
53	2.600	7.077E-01	2.010E+00	6.985E-01	(1.7E-01)	1.984E+00	(5.0E-01)
54	2.650	1.145E+00	3.380E+00	1.123E+00	(1.7E-01)	3.315E+00	(5.1E-01)
55	2.700	1.578E+00	4.833E+00	1.559E+00	(1.7E-01)	4.776E+00	(5.3E-01)
56	2.750	1.927E+00	6.124E+00	1.922E+00	(1.7E-01)	6.109E+00	(5.4E-01)
57	2.800	2.134E+00	7.032E+00	2.143E+00	(1.6E-01)	7.059E+00	(5.3E-01)
58	2.850	2.173E+00	7.418E+00	2.187E+00	(1.6E-01)	7.463E+00	(5.5E-01)
59	2.900	2.057E+00	7.271E+00	2.066E+00	(1.6E-01)	7.302E+00	(5.7E-01)
60	2.950	1.835E+00	6.709E+00	1.834E+00	(1.5E-01)	6.706E+00	(5.7E-01)
61	3.000	1.570E+00	5.939E+00	1.562E+00	(1.5E-01)	5.907E+00	(5.7E-01)
62	3.050	1.326E+00	5.153E+00	1.317E+00	(1.5E-01)	5.147E+00	(5.9E-01)
63	3.100	1.142E+00	4.611E+00	1.138E+00	(1.5E-01)	4.597E+00	(6.0E-01)
64	3.150	1.029E+00	4.291E+00	1.033E+00	(1.5E-01)	4.309E+00	(6.1E-01)
65	3.200	9.726E-01	4.185E+00	9.819E-01	(1.4E-01)	4.225E+00	(6.1E-01)
66	3.250	9.448E-01	4.193E+00	9.535E-01	(1.4E-01)	4.232E+00	(6.3E-01)
67	3.300	9.209E-01	4.214E+00	9.246E-01	(1.4E-01)	4.231E+00	(6.4E-01)
68	3.350	8.901E-01	4.198E+00	8.879E-01	(1.4E-01)	4.187E+00	(6.4E-01)

H_2O at 4°C

	R	G1(R)	D1(R)	G2(R)		D2(R)	
69	3.400	8.577E-01	4.166E+00	8.525E-01	(1.3E-01)	4.141E+00	(6.5E-01)
70	3.450	8.379E-01	4.191E+00	8.343E-01	(1.3E-01)	4.173E+00	(6.6E-01)
71	3.500	8.434E-01	4.342E+00	8.446E-01	(1.3E-01)	4.348E+00	(6.6E-01)
72	3.550	8.763E-01	4.641E+00	8.821E-01	(1.3E-01)	4.672E+00	(6.8E-01)
73	3.600	9.257E-01	5.041E+00	9.330E-01	(1.3E-01)	5.081E+00	(7.0E-01)
74	3.650	9.728E-01	5.446E+00	9.777E-01	(1.3E-01)	5.473E+00	(7.1E-01)
75	3.700	1.000E+00	5.755E+00	1.001E+00	(1.3E-01)	5.756E+00	(7.2E-01)
76	3.750	1.001E+00	5.918E+00	9.974E-01	(1.2E-01)	5.894E+00	(7.2E-01)
77	3.800	9.813E-01	5.955E+00	9.760E-01	(1.2E-01)	5.922E+00	(7.3E-01)
78	3.850	9.549E-01	5.948E+00	9.517E-01	(1.2E-01)	5.928E+00	(7.5E-01)
79	3.900	9.385E-01	5.998E+00	9.390E-01	(1.2E-01)	6.001E+00	(7.7E-01)
80	3.950	9.419E-01	6.176E+00	9.452E-01	(1.2E-01)	6.197E+00	(7.6E-01)
81	4.000	9.648E-01	6.487E+00	9.683E-01	(1.1E-01)	6.510E+00	(7.7E-01)
82	4.050	9.986E-01	6.883E+00	9.995E-01	(1.1E-01)	6.889E+00	(7.9E-01)
83	4.100	1.032E+00	7.290E+00	1.029E+00	(1.1E-01)	7.270E+00	(8.0E-01)
84	4.150	1.057E+00	7.652E+00	1.052E+00	(1.1E-01)	7.612E+00	(8.0E-01)
85	4.200	1.073E+00	7.956E+00	1.068E+00	(1.1E-01)	7.914E+00	(8.0E-01)
86	4.250	1.084E+00	8.230E+00	1.081E+00	(1.1E-01)	8.205E+00	(8.2E-01)
87	4.300	1.096E+00	8.519E+00	1.096E+00	(1.1E-01)	8.517E+00	(8.4E-01)
88	4.350	1.113E+00	8.847E+00	1.114E+00	(1.1E-01)	8.861E+00	(8.5E-01)
89	4.400	1.131E+00	9.198E+00	1.132E+00	(1.0E-01)	9.212E+00	(8.5E-01)
90	4.450	1.145E+00	9.529E+00	1.145E+00	(1.0E-01)	9.527E+00	(8.7E-01)
91	4.500	1.150E+00	9.789E+00	1.148E+00	(1.0E-01)	9.767E+00	(8.8E-01)
92	4.550	1.145E+00	9.959E+00	1.141E+00	(1.0E-01)	9.927E+00	(8.8E-01)
93	4.600	1.131E+00	1.006E+01	1.128E+00	(1.0E-01)	1.003E+01	(8.9E-01)
94	4.650	1.116E+00	1.014E+01	1.116E+00	(9.9E-02)	1.014E+01	(9.0E-01)
95	4.700	1.105E+00	1.026E+01	1.107E+00	(9.8E-02)	1.027E+01	(9.1E-01)
96	4.750	1.099E+00	1.042E+01	1.103E+00	(9.7E-02)	1.045E+01	(9.2E-01)
97	4.800	1.097E+00	1.062E+01	1.100E+00	(9.6E-02)	1.065E+01	(9.3E-01)
98	4.850	1.092E+00	1.079E+01	1.093E+00	(9.5E-02)	1.081E+01	(9.4E-01)
99	4.900	1.080E+00	1.090E+01	1.080E+00	(9.3E-02)	1.089E+01	(9.4E-01)
100	4.950	1.060E+00	1.091E+01	1.059E+00	(9.2E-02)	1.091E+01	(9.5E-01)
101	5.000	1.035E+00	1.087E+01	1.035E+00	(9.2E-02)	1.088E+01	(9.6E-01)
102	5.050	1.011E+00	1.083E+01	1.013E+00	(9.2E-02)	1.086E+01	(9.9E-01)
103	5.100	9.920E-01	1.084E+01	9.956E-01	(9.0E-02)	1.088E+01	(9.9E-01)
104	5.150	9.799E-01	1.092E+01	9.836E-01	(8.8E-02)	1.096E+01	(9.8E-01)
105	5.200	9.714E-01	1.104E+01	9.739E-01	(8.8E-02)	1.107E+01	(1.0E+00)
106	5.250	9.617E-01	1.114E+01	9.624E-01	(8.8E-02)	1.115E+01	(1.0E+00)
107	5.300	9.466E-01	1.117E+01	9.460E-01	(8.7E-02)	1.117E+01	(1.0E+00)
108	5.350	9.257E-01	1.113E+01	9.251E-01	(8.6E-02)	1.113E+01	(1.0E+00)
109	5.400	9.024E-01	1.106E+01	9.028E-01	(8.6E-02)	1.106E+01	(1.1E+00)
110	5.450	8.821E-01	1.101E+01	8.838E-01	(8.4E-02)	1.103E+01	(1.1E+00)
111	5.500	8.696E-01	1.105E+01	8.717E-01	(8.5E-02)	1.108E+01	(1.1E+00)
112	5.550	8.660E-01	1.121E+01	8.574E-01	(8.3E-02)	1.123E+01	(1.1E+00)
113	5.600	8.692E-01	1.145E+01	8.689E-01	(8.1E-02)	1.145E+01	(1.1E+00)
114	5.650	8.751E-01	1.174E+01	8.729E-01	(8.3E-02)	1.171E+01	(1.1E+00)
115	5.700	8.801E-01	1.202E+01	8.769E-01	(8.1E-02)	1.197E+01	(1.1E+00)
116	5.750	8.830E-01	1.227E+01	8.803E-01	(7.9E-02)	1.223E+01	(1.1E+00)
117	5.800	8.857E-01	1.252E+01	8.843E-01	(7.9E-02)	1.250E+01	(1.1E+00)
118	5.850	8.912E-01	1.282E+01	8.912E-01	(8.0E-02)	1.282E+01	(1.1E+00)
119	5.900	9.015E-01	1.319E+01	9.019E-01	(7.7E-02)	1.319E+01	(1.1E+00)
120	5.950	9.161E-01	1.363E+01	9.157E-01	(7.7E-02)	1.362E+01	(1.1E+00)
121	6.000	9.322E-01	1.410E+01	9.302E-01	(7.7E-02)	1.407E+01	(1.2E+00)
122	6.050	9.462E-01	1.455E+01	9.428E-01	(7.6E-02)	1.450E+01	(1.2E+00)
123	6.100	9.557E-01	1.494E+01	9.520E-01	(7.6E-02)	1.489E+01	(1.2E+00)
124	6.150	9.613E-01	1.528E+01	9.586E-01	(7.5E-02)	1.524E+01	(1.2E+00)
125	6.200	9.656E-01	1.560E+01	9.648E-01	(7.4E-02)	1.558E+01	(1.2E+00)
126	6.250	9.722E-01	1.596E+01	9.731E-01	(7.4E-02)	1.597E+01	(1.2E+00)
127	6.300	9.832E-01	1.640E+01	9.848E-01	(7.3E-02)	1.643E+01	(1.2E+00)
128	6.350	9.980E-01	1.691E+01	9.991E-01	(7.2E-02)	1.693E+01	(1.2E+00)
129	6.400	1.014E+00	1.745E+01	1.013E+00	(7.2E-02)	1.744E+01	(1.2E+00)
130	6.450	1.027E+00	1.795E+01	1.025E+00	(7.2E-02)	1.793E+01	(1.3E+00)
131	6.500	1.035E+00	1.837E+01	1.033E+00	(7.0E-02)	1.835E+01	(1.2E+00)
132	6.550	1.038E+00	1.872E+01	1.038E+00	(7.0E-02)	1.872E+01	(1.3E+00)
133	6.600	1.040E+00	1.904E+01	1.042E+00	(6.9E-02)	1.907E+01	(1.3E+00)
134	6.650	1.043E+00	1.938E+01	1.046E+00	(7.0E-02)	1.944E+01	(1.3E+00)
135	6.700	1.048E+00	1.978E+01	1.052E+00	(6.9E-02)	1.985E+01	(1.3E+00)
136	6.750	1.057E+00	2.023E+01	1.059E+00	(6.8E-02)	2.028E+01	(1.3E+00)

H_2O at 4°C

	R	G1(R)	D1(R)	G2(R)		D2(R)	
137	6.800	1.064E+00	2.068E+01	1.066E+00	(6.8E-02)	2.071E+01	(1.3E+00)
138	6.850	1.069E+00	2.107E+01	1.069E+00	(6.8E-02)	2.108E+01	(1.3E+00)
139	6.900	1.068E+00	2.136E+01	1.068E+00	(6.6E-02)	2.136E+01	(1.3E+00)
140	6.950	1.062E+00	2.156E+01	1.063E+00	(6.5E-02)	2.157E+01	(1.3E+00)
141	7.000	1.054E+00	2.171E+01	1.056E+00	(6.6E-02)	2.174E+01	(1.4E+00)
142	7.050	1.047E+00	2.187E+01	1.050E+00	(6.6E-02)	2.192E+01	(1.4E+00)
143	7.100	1.043E+00	2.209E+01	1.045E+00	(6.5E-02)	2.214E+01	(1.4E+00)
144	7.150	1.041E+00	2.235E+01	1.042E+00	(6.4E-02)	2.238E+01	(1.4E+00)
145	7.200	1.039E+00	2.264E+01	1.039E+00	(6.5E-02)	2.264E+01	(1.4E+00)
146	7.250	1.037E+00	2.290E+01	1.035E+00	(6.4E-02)	2.287E+01	(1.4E+00)
147	7.300	1.032E+00	2.310E+01	1.030E+00	(6.2E-02)	2.306E+01	(1.4E+00)
148	7.350	1.024E+00	2.325E+01	1.023E+00	(6.2E-02)	2.323E+01	(1.4E+00)
149	7.400	1.017E+00	2.339E+01	1.016E+00	(6.2E-02)	2.338E+01	(1.4E+00)
150	7.450	1.010E+00	2.356E+01	1.010E+00	(6.2E-02)	2.356E+01	(1.4E+00)
151	7.500	1.006E+00	2.377E+01	1.005E+00	(6.2E-02)	2.376E+01	(1.5E+00)
152	7.550	1.003E+00	2.402E+01	1.001E+00	(6.1E-02)	2.399E+01	(1.5E+00)
153	7.600	1.000E+00	2.428E+01	9.977E-01	(6.0E-02)	2.422E+01	(1.5E+00)
154	7.650	9.965E-01	2.451E+01	9.936E-01	(6.1E-02)	2.443E+01	(1.5E+00)
155	7.700	9.918E-01	2.471E+01	9.892E-01	(5.9E-02)	2.465E+01	(1.5E+00)
156	7.750	9.871E-01	2.491E+01	9.854E-01	(5.9E-02)	2.487E+01	(1.5E+00)
157	7.800	9.840E-01	2.516E+01	9.833E-01	(6.0E-02)	2.514E+01	(1.5E+00)
158	7.850	9.834E-01	2.547E+01	9.832E-01	(5.8E-02)	2.546E+01	(1.5E+00)
159	7.900	9.847E-01	2.583E+01	9.842E-01	(5.9E-02)	2.581E+01	(1.5E+00)
160	7.950	9.863E-01	2.619E+01	9.850E-01	(5.7E-02)	2.616E+01	(1.5E+00)
161	8.000	9.861E-01	2.652E+01	9.843E-01	(5.9E-02)	2.647E+01	(1.6E+00)
162	8.050	9.833E-01	2.678E+01	9.818E-01	(5.7E-02)	2.673E+01	(1.5E+00)
163	8.100	9.790E-01	2.699E+01	9.784E-01	(5.7E-02)	2.698E+01	(1.6E+00)
164	8.150	9.753E-01	2.722E+01	9.762E-01	(5.6E-02)	2.725E+01	(1.6E+00)
165	8.200	9.749E-01	2.754E+01	9.769E-01	(5.6E-02)	2.760E+01	(1.6E+00)
166	8.250	9.788E-01	2.800E+01	9.811E-01	(5.7E-02)	2.806E+01	(1.6E+00)
167	8.300	9.863E-01	2.855E+01	9.881E-01	(5.5E-02)	2.860E+01	(1.6E+00)
168	8.350	9.947E-01	2.914E+01	9.955E-01	(5.6E-02)	2.917E+01	(1.6E+00)
169	8.400	1.001E+00	2.968E+01	1.001E+00	(5.4E-02)	2.968E+01	(1.6E+00)
170	8.450	1.003E+00	3.011E+01	1.004E+00	(5.5E-02)	3.011E+01	(1.7E+00)
171	8.500	1.002E+00	3.043E+01	1.003E+00	(5.4E-02)	3.046E+01	(1.6E+00)
172	8.550	9.995E-01	3.070E+01	1.002E+00	(5.4E-02)	3.078E+01	(1.7E+00)
173	8.600	9.982E-01	3.102E+01	1.002E+00	(5.4E-02)	3.113E+01	(1.7E+00)
174	8.650	9.999E-01	3.144E+01	1.003E+00	(5.3E-02)	3.154E+01	(1.7E+00)
175	8.700	1.004E+00	3.194E+01	1.006E+00	(5.4E-02)	3.200E+01	(1.7E+00)
176	8.750	1.009E+00	3.245E+01	1.009E+00	(5.1E-02)	3.247E+01	(1.7E+00)
177	8.800	1.011E+00	3.290E+01	1.010E+00	(5.3E-02)	3.288E+01	(1.7E+00)
178	8.850	1.010E+00	3.323E+01	1.008E+00	(5.0E-02)	3.319E+01	(1.7E+00)
179	8.900	1.005E+00	3.344E+01	1.004E+00	(5.3E-02)	3.343E+01	(1.8E+00)
180	8.950	9.990E-01	3.363E+01	9.999E-01	(5.0E-02)	3.366E+01	(1.7E+00)
181	9.000	9.954E-01	3.388E+01	9.968E-01	(5.2E-02)	3.393E+01	(1.8E+00)
182	9.050	9.954E-01	3.426E+01	9.965E-01	(5.0E-02)	3.430E+01	(1.7E+00)
183	9.100	9.985E-01	3.475E+01	9.983E-01	(5.1E-02)	3.474E+01	(1.8E+00)
184	9.150	1.003E+00	3.527E+01	1.001E+00	(5.1E-02)	3.520E+01	(1.8E+00)
185	9.200	1.004E+00	3.573E+01	1.001E+00	(5.0E-02)	3.561E+01	(1.8E+00)
186	9.250	1.003E+00	3.605E+01	9.992E-01	(5.0E-02)	3.593E+01	(1.8E+00)
187	9.300	9.973E-01	3.625E+01	9.949E-01	(4.9E-02)	3.616E+01	(1.8E+00)
188	9.350	9.912E-01	3.641E+01	9.902E-01	(5.0E-02)	3.638E+01	(1.9E+00)
189	9.400	9.874E-01	3.666E+01	9.873E-01	(4.9E-02)	3.666E+01	(1.8E+00)
190	9.450	9.878E-01	3.707E+01	9.877E-01	(4.9E-02)	3.707E+01	(1.9E+00)
191	9.500	9.920E-01	3.762E+01	9.910E-01	(4.8E-02)	3.758E+01	(1.8E+00)
192	9.550	9.976E-01	3.823E+01	9.953E-01	(4.8E-02)	3.814E+01	(1.9E+00)
193	9.600	1.001E+00	3.878E+01	9.982E-01	(4.8E-02)	3.866E+01	(1.8E+00)
194	9.650	1.001E+00	3.916E+01	9.981E-01	(4.8E-02)	3.906E+01	(1.9E+00)
195	9.700	9.959E-01	3.938E+01	9.947E-01	(4.7E-02)	3.933E+01	(1.9E+00)
196	9.750	9.890E-01	3.951E+01	9.896E-01	(4.8E-02)	3.953E+01	(1.9E+00)
197	9.800	9.835E-01	3.969E+01	9.855E-01	(4.6E-02)	3.977E+01	(1.9E+00)
198	9.850	9.822E-01	4.005E+01	9.844E-01	(4.8E-02)	4.013E+01	(1.9E+00)
199	9.900	9.862E-01	4.062E+01	9.871E-01	(4.5E-02)	4.066E+01	(1.9E+00)
200	9.950	9.937E-01	4.134E+01	9.928E-01	(4.6E-02)	4.130E+01	(1.9E+00)
201	10.000	1.002E+00	4.209E+01	9.994E-01	(4.6E-02)	4.200E+01	(1.9E+00)

INTEGRAL (G(R)-1) = -2.211045E+00

(G(R)-1)*R**2 = -3.621568E+00

H_2O at 4°C

	S	SI(S) 1	SI(S) 2	ERROR	DELTA SI(S)
2	.062	5.991507	5.952212	.003026	.039295
3	.072	4.118235	4.072448	.002089	.045787
4	.082	2.911720	2.859466	.001488	.052254
5	.093	2.013514	1.954823	.001041	.058691
6	.103	1.356963	1.291867	.000715	.065097
7	.113	.880801	.809332	.000479	.071468
8	.123	.543792	.465989	.000314	.077803
9	.134	.309665	.225566	.000200	.084098
10	.144	.151294	.060871	.000124	.090353
11	.154	.044855	-.051710	.000074	.096565
12	.165	-.022348	-.125081	.000043	.102733
13	.175	-.058901	-.167757	.000028	.108856
14	.185	-.083593	-.198626	.000041	.114934
15	.195	-.096072	-.217037	.000036	.120964
16	.206	-.104921	-.231870	.000034	.126949
17	.216	-.111547	-.244434	.000034	.132887
18	.226	-.117187	-.255966	.000035	.138779
19	.237	-.122168	-.266793	.000037	.144625
20	.247	-.127518	-.277945	.000039	.150427
21	.257	-.132608	-.288793	.000040	.156185
22	.267	-.139120	-.301021	.000041	.161901
23	.278	-.145113	-.312688	.000042	.167575
24	.288	-.150710	-.323920	.000043	.173211
25	.298	-.157792	-.336600	.000043	.178808
26	.309	-.164773	-.349143	.000043	.184370
27	.319	-.171428	-.361327	.000043	.189898
28	.329	-.175306	-.373700	.000043	.195394
29	.339	-.185644	-.386505	.000043	.200860
30	.350	-.193537	-.399836	.000042	.206299
31	.360	-.202733	-.414445	.000054	.211712
32	.386	-.220005	-.445149	.000066	.225144
33	.411	-.236528	-.474983	.000070	.238455
34	.437	-.253064	-.504735	.000072	.251671
35	.463	-.266389	-.531197	.000078	.264809
36	.489	-.281823	-.559700	.000081	.277877
37	.514	-.296790	-.587669	.000086	.290879
38	.540	-.312077	-.615884	.000090	.303806
39	.566	-.326417	-.643061	.000096	.316644
40	.591	-.341409	-.670778	.000101	.329369
41	.617	-.356046	-.697999	.000107	.341953
42	.643	-.370858	-.725222	.000112	.354364
43	.668	-.385215	-.751783	.000119	.366567
44	.694	-.400080	-.778608	.000124	.378529
45	.720	-.414406	-.804621	.000131	.390214
46	.746	-.428407	-.830003	.000138	.401596
47	.771	-.443044	-.855691	.000146	.412647
48	.797	-.457147	-.880499	.000153	.423351
49	.823	-.471006	-.904700	.000161	.433694
50	.848	-.483714	-.927383	.000172	.443669
51	.874	-.497194	-.950468	.000181	.453275
52	.900	-.510061	-.972577	.000191	.462515
53	.925	-.521251	-.992649	.000204	.471398
54	.951	-.533062	-1.012994	.000216	.479933
55	.977	-.543449	-1.031577	.000232	.488129
56	1.002	-.554619	-1.050615	.000245	.495995
57	1.028	-.563372	-1.066913	.000264	.503541
58	1.054	-.573348	-1.084117	.000280	.510770
59	1.079	-.581732	-1.099416	.000299	.517684
60	1.105	-.588520	-1.112800	.000321	.524280
61	1.131	-.593745	-1.124300	.000347	.530555
62	1.156	-.599016	-1.135517	.000372	.536501
63	1.182	-.598912	-1.141023	.000407	.542110
64	1.208	-.597432	-1.144807	.000445	.547374
65	1.233	-.594983	-1.147271	.000462	.552287
66	1.310	-.577892	-1.142812	.000592	.564920
67	1.387	-.533387	-1.108035	.000768	.574649
68	1.464	-.449305	-1.031546	.001017	.582241
69	1.541	-.323916	-.912702	.001343	.588786
70	1.618	-.141872	-.737060	.001765	.595187

H_2O at 25°C

	S	SI(S) 1	SI(S) 2	ERROR	DELTA SI(S)
71	1.695	.108794	-.492835	.002307	.601630
72	1.771	.403374	-.203986	.002930	.607360
73	1.848	.700991	.089983	.003560	.611008
74	1.925	.922792	.311433	.004054	.611359
75	2.002	1.093956	.485762	.004484	.608194
76	2.078	1.117359	.514649	.004653	.602710
77	2.155	1.100004	.502805	.004755	.597198
78	2.231	1.027530	.433502	.004764	.594028
79	2.308	.981138	.386740	.004821	.594398
80	2.384	.949115	.351601	.004906	.597514
81	2.461	.934719	.334017	.005025	.600703
82	2.537	.977254	.376718	.005247	.600536
83	2.614	1.086675	.492169	.005589	.594506
84	2.690	1.191040	.608568	.005928	.582471
85	2.766	1.316257	.749168	.006305	.567089
86	2.842	1.421761	.868811	.006654	.552950
87	2.918	1.410176	.865482	.006804	.544694
88	2.994	1.296955	.752003	.006778	.544952
89	3.070	1.105356	.552304	.012395	.553051
90	3.222	.483348	-.092341	.011094	.575690
91	3.374	-.040509	-.615423	.010198	.574914
92	3.525	-.330209	-.875128	.010170	.544918
93	3.676	-.325707	-.839903	.010882	.514196
94	3.827	-.259308	-.756892	.011992	.497584
95	3.978	-.079102	-.555900	.013569	.476798
96	4.128	.176787	-.257927	.015478	.434715
97	4.278	.436619	.055663	.017451	.380956
98	4.427	.658132	.328153	.019394	.329978
99	4.576	.745671	.470114	.020954	.275558
100	4.725	.842347	.637961	.022623	.204386
101	4.874	.777308	.657435	.023751	.119873
102	5.022	.607580	.573531	.024625	.034148
103	5.170	.333576	.387624	.025194	-.054048
104	5.317	-.001067	.154740	.025572	-.155907
105	5.464	-.297639	-.025923	.026170	-.271716
106	5.610	-.691280	-.299583	.026459	-.391697
107	5.757	-1.004525	-.491089	.027037	-.513435
108	5.902	-1.249642	-.503948	.027927	-.645694
109	6.047	-1.349018	-.557163	.029393	-.791855
110	6.192	-1.399701	-.456126	.031052	-.943575
111	6.337	-1.393297	-.298568	.032833	-1.094729
112	6.480	-1.388106	-.117947	.034787	-1.250159
113	6.624	-1.367899	.046569	.036642	-1.414468
114	6.766	-1.262857	.318367	.038807	-1.581224
115	6.909	-1.294144	.446842	.040488	-1.740986
116	7.051	-1.376209	.517339	.041942	-1.893548
117	7.192	-1.587967	.455648	.042819	-2.043515
118	7.332	-1.769974	.418215	.043698	-2.188188
119	7.473	-2.073931	.243400	.038336	-2.317331
120	7.612	-2.370851	.055701	.038663	-2.426563
121	7.751	-2.663068	-.143017	.038876	-2.520052
122	7.890	-2.817753	-.217755	.039339	-2.599998
123	8.027	-2.957115	-.296808	.039879	-2.660307
124	8.164	-3.081814	-.387093	.040372	-2.694721
125	8.301	-3.100945	-.395184	.041059	-2.705762
126	8.437	-2.981755	-.281539	.042329	-2.700216
127	8.572	-2.912716	-.233790	.043345	-2.678926
128	8.707	-2.709235	-.072113	.044844	-2.637122
129	8.841	-2.584702	-.010477	.045915	-2.574226
130	8.974	-2.371342	.126071	.047372	-2.497412
131	9.107	-2.208436	.205181	.048591	-2.413616
132	9.239	-2.063335	.259165	.049702	-2.322500
133	9.370	-1.928920	.291858	.050697	-2.220778
134	9.500	-1.866055	.244717	.051423	-2.110772
135	9.630	-1.755323	.244889	.052345	-2.000213
136	9.759	-1.715847	.178018	.052941	-1.893865
137	9.887	-1.728021	.061412	.053313	-1.789433
138	10.015	-1.734379	-.051025	.053707	-1.683355

H_2O at 25°C

	S	SI(S) 1	SI(S) 2	ERROR	DELTA SI(S)
139	10.142	-1.665594	-.087854	.054440	-1.577740
140	10.268	-1.646351	-.167728	.054930	-1.478623
141	10.393	-1.544560	-.156158	.050321	-1.388402
142	10.517	-1.511720	-.208508	.051060	-1.303211
143	10.641	-1.373552	-.154958	.051954	-1.218594
144	10.764	-1.310610	-.175143	.052826	-1.135467
145	10.886	-1.199209	-.140731	.053855	-1.058478
146	11.007	-1.063076	-.073673	.054971	-.989403
147	11.127	-1.009894	-.085416	.055740	-.924478
148	11.247	-.846189	.012744	.056994	-.858932
149	11.366	-.768651	.023932	.057946	-.792582
150	11.483	-.624017	.105499	.059092	-.729477
151	11.600	-.508887	.163536	.060085	-.672423
152	11.716	-.455301	.163100	.060774	-.619401
153	11.831	-.337382	.228658	.061658	-.566040
154	11.946	-.323556	.187231	.062153	-.510787
155	12.059	-.363674	.092863	.062411	-.456537
156	12.171	-.314312	.092819	.063070	-.407131
157	12.283	-.333176	.029928	.063509	-.363104
158	12.393	-.356345	-.034880	.063831	-.321485
159	12.503	-.383739	-.104296	.064107	-.279443
160	12.611	-.315402	-.078019	.064783	-.237382
161	12.719	-.275769	-.077617	.065304	-.198153
162	12.826	-.289437	-.125775	.065513	-.163661
163	12.932	-.268521	-.135644	.065919	-.132876
164	13.036	-.241751	-.138418	.066342	-.103332
165	13.140	-.168206	-.093932	.066966	-.074274
166	13.243	-.080934	-.033067	.052016	-.047867
167	13.445	-.033297	-.020905	.052660	-.012392
168	13.644	.041415	.028915	.053068	.012500
169	13.838	.111309	.064112	.053505	.047197
170	14.028	.115414	.044976	.053607	.070437
171	14.214	.157338	.083311	.053764	.074027
172	14.395	.195312	.109584	.053824	.085728
173	14.572	.152291	.049679	.053638	.102612
174	14.744	.073065	-.026669	.053332	.099734
175	14.913	.019698	-.070157	.053130	.089855
176	15.076	-.033519	-.129393	.052854	.095874
177	15.235	.026522	-.074625	.052883	.101147
178	15.389	.041991	-.041400	.052784	.083391
179	15.539	.068143	.007302	.052619	.060842
180	15.684	.133142	.069385	.052515	.063757
181	15.824	.173282	.087626	.052268	.085656
182	15.959	.312191	.219385	.052305	.092806

INTEGRAL(SI(S)*S) = -3.662525E-01

OBSERVED RADIAL DISTRIBUTION FUNCTIONS (RDF2 = 0 FROM R= 0 TO R= 2.30)

	R	G1(R)	D1(R)	G2(R)	D2(R)
1	0	1.000E+00	0	1.000E+00 (0)	0 (0)
2	.050	-1.283E+02	-1.343E-01	3.984E-01 (6.6E+00)	4.173E-04 (9.0E-03)
3	.100	-1.151E+02	-4.821E-01	2.798E-01 (7.1E+00)	1.172E-03 (3.0E-02)
4	.150	-9.491E+01	-8.947E-01	1.301E-01 (5.1E+00)	1.227E-03 (4.8E-02)
5	.200	-7.020E+01	-1.176E+00	-6.367E-04 (2.9E+00)	-1.067E-05 (4.9E-02)
6	.250	-4.387E+01	-1.149E+00	-7.544E-02 (1.9E+00)	-1.975E-03 (5.1E-02)
7	.300	-1.891E+01	-7.131E-01	-8.400E-02 (1.8E+00)	-3.167E-03 (7.0E-02)
8	.350	2.077E+00	1.066E-01	-4.351E-02 (1.7E+00)	-2.233E-03 (8.9E-02)
9	.400	1.729E+01	1.159E+00	1.267E-02 (1.4E+00)	8.493E-04 (9.2E-02)
10	.450	2.508E+01	2.204E+00	5.222E-02 (1.1E+00)	4.430E-03 (9.7E-02)
11	.500	2.844E+01	2.979E+00	5.818E-02 (1.1E+00)	6.094E-03 (1.1E-01)
12	.550	2.591E+01	3.284E+00	3.404E-02 (1.0E+00)	4.314E-03 (1.3E-01)
13	.600	2.016E+01	3.041E+00	-1.765E-03 (9.1E-01)	-2.662E-04 (1.4E-01)
14	.650	1.310E+01	2.319E+00	-2.785E-02 (8.2E-01)	-4.930E-03 (1.5E-01)
15	.700	6.355E+00	1.305E+00	-3.156E-02 (8.0E-01)	-6.480E-03 (1.6E-01)
16	.750	1.019E+00	2.401E-01	-1.438E-02 (7.6E-01)	-3.390E-03 (1.8E-01)
17	.800	-2.436E+00	-6.532E-01	1.093E-02 (6.8E-01)	2.931E-03 (1.8E-01)

H_2O at 25°C

	R	G1(R)	D1(R)	G2(R)	D2(R)
18	.850	-4.076E+00	-1.234E+00	2.886E-02 (6.3E-01)	8.737E-03 (1.9E-01)
19	.900	-4.315E+00	-1.464E+00	3.007E-02 (6.3E-01)	1.020E-02 (2.1E-01)
20	.950	-3.687E+00	-1.394E+00	1.980E-02 (6.0E-01)	5.973E-03 (2.2E-01)
21	1.000	-2.671E+00	-1.119E+00	-4.857E-03 (5.3E-01)	-1.700E-03 (2.2E-01)
22	1.050	-1.596E+00	-7.372E-01	-1.754E-02 (5.1E-01)	-8.103E-03 (2.4E-01)
23	1.100	-6.342E-01	-3.215E-01	-1.763E-02 (5.1E-01)	-8.937E-03 (2.6E-01)
24	1.150	1.536E-01	8.508E-02	-5.676E-03 (5.0E-01)	-3.145E-03 (2.8E-01)
25	1.200	7.556E-01	4.559E-01	1.023E-02 (4.5E-01)	6.172E-03 (2.7E-01)
26	1.250	1.167E+00	7.639E-01	2.058E-02 (4.3E-01)	1.347E-02 (2.8E-01)
27	1.300	1.377E+00	9.750E-01	2.000E-02 (4.2E-01)	1.416E-02 (3.0E-01)
28	1.350	1.382E+00	1.055E+00	9.912E-03 (4.1E-01)	7.568E-03 (3.2E-01)
29	1.400	1.204E+00	9.890E-01	-2.982E-03 (3.9E-01)	-2.448E-03 (3.2E-01)
30	1.450	8.978E-01	7.909E-01	-1.105E-02 (3.7E-01)	-9.737E-03 (3.3E-01)
31	1.500	5.412E-01	5.102E-01	-1.016E-02 (3.7E-01)	-9.575E-03 (3.5E-01)
32	1.550	2.143E-01	2.137E-01	-1.577E-03 (3.6E-01)	-1.587E-03 (3.7E-01)
33	1.600	-2.444E-02	-2.622E-02	9.314E-03 (3.4E-01)	9.990E-03 (3.7E-01)
34	1.650	-1.520E-01	-1.734E-01	1.651E-02 (3.3E-01)	1.883E-02 (3.8E-01)
35	1.700	-1.793E-01	-2.171E-01	1.671E-02 (3.3E-01)	2.024E-02 (4.0E-01)
36	1.750	-1.384E-01	-1.776E-01	1.065E-02 (3.2E-01)	1.366E-02 (4.1E-01)
37	1.800	-6.594E-02	-8.951E-02	2.021E-03 (3.0E-01)	2.744E-03 (4.1E-01)
38	1.850	1.026E-02	1.471E-02	-4.859E-03 (3.0E-01)	-6.968E-03 (4.3E-01)
39	1.900	7.566E-02	1.144E-01	-7.139E-03 (2.9E-01)	-1.080E-02 (4.4E-01)
40	1.950	1.265E-01	2.015E-01	-4.101E-03 (2.8E-01)	-6.533E-03 (4.5E-01)
41	2.000	1.632E-01	2.735E-01	3.317E-03 (2.7E-01)	5.558E-03 (4.6E-01)
42	2.050	1.851E-01	3.258E-01	1.312E-02 (2.7E-01)	2.310E-02 (4.7E-01)
43	2.100	1.878E-01	3.471E-01	2.207E-02 (2.7E-01)	4.077E-02 (4.9E-01)
44	2.150	1.654E-01	3.204E-01	2.497E-02 (2.6E-01)	4.837E-02 (5.0E-01)
45	2.200	1.138E-01	2.307E-01	1.482E-02 (2.5E-01)	3.006E-02 (5.0E-01)
46	2.250	3.527E-02	7.480E-02	-1.462E-02 (2.4E-01)	-3.102E-02 (5.2E-01)
47	2.300	-5.805E-02	-1.287E-01	-6.348E-02 (2.4E-01)	-1.407E-01 (5.4E-01)
48	2.350	-1.430E-01	-3.308E-01	-1.195E-01 (2.4E-01)	-2.766E-01 (5.5E-01)
49	2.400	-1.870E-01	-4.513E-01	-1.550E-01 (2.3E-01)	-3.741E-01 (5.5E-01)
50	2.450	-1.534E-01	-3.857E-01	-1.298E-01 (2.2E-01)	-3.265E-01 (5.6E-01)
51	2.500	-1.051E-02	-2.751E-02	-2.873E-03 (2.2E-01)	-7.524E-03 (5.8E-01)
52	2.550	2.570E-01	7.001E-01	2.518E-01 (2.2E-01)	6.859E-01 (6.0E-01)
53	2.600	6.382E-01	1.807E+00	6.297E-01 (2.1E-01)	1.783E+00 (6.0E-01)
54	2.650	1.092E+00	3.212E+00	1.090E+00 (2.1E-01)	3.206E+00 (6.1E-01)
55	2.700	1.551E+00	4.738E+00	1.560E+00 (2.1E-01)	4.765E+00 (6.3E-01)
56	2.750	1.941E+00	6.151E+00	1.958E+00 (2.0E-01)	6.203E+00 (6.4E-01)
57	2.800	2.197E+00	7.216E+00	2.214E+00 (1.9E-01)	7.273E+00 (6.4E-01)
58	2.850	2.285E+00	7.775E+00	2.296E+00 (1.9E-01)	7.814E+00 (6.6E-01)
59	2.900	2.212E+00	7.794E+00	2.215E+00 (1.9E-01)	7.803E+00 (6.8E-01)
60	2.950	2.023E+00	7.376E+00	2.020E+00 (1.9E-01)	7.364E+00 (6.8E-01)
61	3.000	1.782E+00	6.719E+00	1.779E+00 (1.8E-01)	6.706E+00 (6.9E-01)
62	3.050	1.551E+00	6.045E+00	1.553E+00 (1.8E-01)	6.051E+00 (7.1E-01)
63	3.100	1.370E+00	5.517E+00	1.378E+00 (1.8E-01)	5.549E+00 (7.2E-01)
64	3.150	1.249E+00	5.194E+00	1.251E+00 (1.7E-01)	5.241E+00 (7.3E-01)
65	3.200	1.173E+00	5.032E+00	1.183E+00 (1.7E-01)	5.075E+00 (7.3E-01)
66	3.250	1.115E+00	4.934E+00	1.120E+00 (1.7E-01)	4.955E+00 (7.6E-01)
67	3.300	1.055E+00	4.815E+00	1.054E+00 (1.7E-01)	4.811E+00 (7.7E-01)
68	3.350	9.897E-01	4.654E+00	9.858E-01 (1.6E-01)	4.635E+00 (7.7E-01)
69	3.400	9.294E-01	4.501E+00	9.254E-01 (1.6E-01)	4.487E+00 (7.7E-01)
70	3.450	8.916E-01	4.446E+00	8.926E-01 (1.6E-01)	4.451E+00 (7.9E-01)
71	3.500	8.877E-01	4.556E+00	8.928E-01 (1.6E-01)	4.582E+00 (8.2E-01)
72	3.550	9.157E-01	4.835E+00	9.225E-01 (1.6E-01)	4.871E+00 (8.2E-01)
73	3.600	9.605E-01	5.215E+00	9.655E-01 (1.5E-01)	5.243E+00 (8.3E-01)
74	3.650	1.001E+00	5.589E+00	1.002E+00 (1.5E-01)	5.595E+00 (8.5E-01)
75	3.700	1.023E+00	5.856E+00	1.020E+00 (1.5E-01)	5.852E+00 (8.7E-01)
76	3.750	1.021E+00	6.017E+00	1.018E+00 (1.5E-01)	5.998E+00 (8.7E-01)
77	3.800	1.006E+00	6.088E+00	1.005E+00 (1.4E-01)	6.080E+00 (8.7E-01)
78	3.850	9.926E-01	6.154E+00	9.950E-01 (1.4E-01)	6.179E+00 (8.9E-01)
79	3.900	9.920E-01	6.321E+00	9.975E-01 (1.4E-01)	6.356E+00 (9.1E-01)
80	3.950	1.007E+00	6.582E+00	1.013E+00 (1.4E-01)	6.622E+00 (9.1E-01)
81	4.000	1.030E+00	6.905E+00	1.034E+00 (1.4E-01)	6.934E+00 (9.3E-01)
82	4.050	1.050E+00	7.218E+00	1.052E+00 (1.4E-01)	7.227E+00 (9.4E-01)
83	4.100	1.060E+00	7.463E+00	1.059E+00 (1.3E-01)	7.458E+00 (9.5E-01)
84	4.150	1.058E+00	7.637E+00	1.058E+00 (1.3E-01)	7.636E+00 (9.6E-01)
85	4.200	1.055E+00	7.796E+00	1.058E+00 (1.3E-01)	7.815E+00 (9.6E-01)
86	4.250	1.060E+00	8.021E+00	1.066E+00 (1.3E-01)	8.067E+00 (9.9E-01)

H_2O at 25°C

	R	G1(R)	D1(R)	G2(R)	D2(R)
87	4.300	1.079E+00	8.361E+00	1.088E+00 (1.3E-01)	8.427E+00 (1.0E+00)
88	4.350	1.110E+00	8.802E+00	1.119E+00 (1.3E-01)	8.869E+00 (1.0E+00)
89	4.400	1.142E+00	9.263E+00	1.148E+00 (1.3E-01)	9.314E+00 (1.0E+00)
90	4.450	1.162E+00	9.636E+00	1.165E+00 (1.2E-01)	9.668E+00 (1.0E+00)
91	4.500	1.162E+00	9.859E+00	1.164E+00 (1.2E-01)	9.878E+00 (1.1E+00)
92	4.550	1.145E+00	9.934E+00	1.149E+00 (1.2E-01)	9.962E+00 (1.0E+00)
93	4.600	1.122E+00	9.951E+00	1.128E+00 (1.2E-01)	1.000E+01 (1.1E+00)
94	4.650	1.107E+00	1.003E+01	1.116E+00 (1.2E-01)	1.011E+01 (1.1E+00)
95	4.700	1.107E+00	1.024E+01	1.117E+00 (1.2E-01)	1.034E+01 (1.1E+00)
96	4.750	1.121E+00	1.050E+01	1.131E+00 (1.2E-01)	1.069E+01 (1.1E+00)
97	4.800	1.139E+00	1.100E+01	1.146E+00 (1.1E-01)	1.107E+01 (1.1E+00)
98	4.850	1.147E+00	1.130E+01	1.151E+00 (1.1E-01)	1.135E+01 (1.1E+00)
99	4.900	1.134E+00	1.140E+01	1.137E+00 (1.1E-01)	1.144E+01 (1.1E+00)
100	4.950	1.100E+00	1.129E+01	1.104E+00 (1.1E-01)	1.134E+01 (1.1E+00)
101	5.000	1.055E+00	1.105E+01	1.061E+00 (1.1E-01)	1.112E+01 (1.1E+00)
102	5.050	1.013E+00	1.083E+01	1.022E+00 (1.1E-01)	1.092E+01 (1.2E+00)
103	5.100	9.863E-01	1.075E+01	9.955E-01 (1.1E-01)	1.085E+01 (1.2E+00)
104	5.150	9.781E-01	1.087E+01	9.862E-01 (1.1E-01)	1.096E+01 (1.2E+00)
105	5.200	9.834E-01	1.114E+01	9.891E-01 (1.1E-01)	1.120E+01 (1.2E+00)
106	5.250	9.910E-01	1.144E+01	9.942E-01 (1.1E-01)	1.148E+01 (1.2E+00)
107	5.300	9.904E-01	1.166E+01	9.925E-01 (1.0E-01)	1.168E+01 (1.2E+00)
108	5.350	9.769E-01	1.171E+01	9.796E-01 (1.0E-01)	1.175E+01 (1.2E+00)
109	5.400	9.536E-01	1.165E+01	9.579E-01 (1.0E-01)	1.170E+01 (1.3E+00)
110	5.450	9.287E-01	1.156E+01	9.345E-01 (1.0E-01)	1.163E+01 (1.3E+00)
111	5.500	9.105E-01	1.154E+01	9.166E-01 (1.0E-01)	1.162E+01 (1.3E+00)
112	5.550	9.030E-01	1.165E+01	9.079E-01 (9.9E-02)	1.172E+01 (1.3E+00)
113	5.600	9.045E-01	1.188E+01	9.074E-01 (9.8E-02)	1.192E+01 (1.3E+00)
114	5.650	9.092E-01	1.216E+01	9.103E-01 (1.0E-01)	1.218E+01 (1.3E+00)
115	5.700	9.111E-01	1.246E+01	9.118E-01 (9.7E-02)	1.241E+01 (1.3E+00)
116	5.750	9.083E-01	1.258E+01	9.099E-01 (9.5E-02)	1.260E+01 (1.3E+00)
117	5.800	9.031E-01	1.273E+01	9.062E-01 (9.5E-02)	1.277E+01 (1.3E+00)
118	5.850	9.010E-01	1.292E+01	9.054E-01 (9.5E-02)	1.298E+01 (1.4E+00)
119	5.900	9.069E-01	1.323E+01	9.113E-01 (9.3E-02)	1.329E+01 (1.4E+00)
120	5.950	9.219E-01	1.367E+01	9.251E-01 (9.2E-02)	1.372E+01 (1.4E+00)
121	6.000	9.426E-01	1.422E+01	9.443E-01 (9.2E-02)	1.424E+01 (1.4E+00)
122	6.050	9.630E-01	1.477E+01	9.638E-01 (9.1E-02)	1.478E+01 (1.4E+00)
123	6.100	9.779E-01	1.524E+01	9.791E-01 (9.1E-02)	1.526E+01 (1.4E+00)
124	6.150	9.854E-01	1.562E+01	9.881E-01 (9.0E-02)	1.566E+01 (1.4E+00)
125	6.200	9.881E-01	1.591E+01	9.926E-01 (8.8E-02)	1.599E+01 (1.4E+00)
126	6.250	9.911E-01	1.622E+01	9.966E-01 (8.8E-02)	1.631E+01 (1.4E+00)
127	6.300	9.991E-01	1.661E+01	1.004E+00 (8.8E-02)	1.670E+01 (1.5E+00)
128	6.350	1.014E+00	1.713E+01	1.016E+00 (8.7E-02)	1.720E+01 (1.5E+00)
129	6.400	1.033E+00	1.773E+01	1.036E+00 (8.6E-02)	1.778E+01 (1.5E+00)
130	6.450	1.053E+00	1.835E+01	1.055E+00 (8.5E-02)	1.839E+01 (1.5E+00)
131	6.500	1.068E+00	1.890E+01	1.070E+00 (8.4E-02)	1.895E+01 (1.5E+00)
132	6.550	1.075E+00	1.933E+01	1.080E+00 (8.4E-02)	1.941E+01 (1.5E+00)
133	6.600	1.077E+00	1.965E+01	1.083E+00 (8.4E-02)	1.977E+01 (1.5E+00)
134	6.650	1.075E+00	1.992E+01	1.082E+00 (8.3E-02)	2.005E+01 (1.5E+00)
135	6.700	1.074E+00	2.019E+01	1.080E+00 (8.2E-02)	2.032E+01 (1.5E+00)
136	6.750	1.075E+00	2.052E+01	1.080E+00 (8.1E-02)	2.062E+01 (1.6E+00)
137	6.800	1.078E+00	2.089E+01	1.082E+00 (8.1E-02)	2.096E+01 (1.6E+00)
138	6.850	1.082E+00	2.127E+01	1.085E+00 (8.1E-02)	2.133E+01 (1.6E+00)
139	6.900	1.085E+00	2.164E+01	1.089E+00 (7.9E-02)	2.171E+01 (1.6E+00)
140	6.950	1.086E+00	2.198E+01	1.091E+00 (7.9E-02)	2.208E+01 (1.6E+00)
141	7.000	1.085E+00	2.228E+01	1.092E+00 (7.9E-02)	2.242E+01 (1.6E+00)
142	7.050	1.084E+00	2.257E+01	1.091E+00 (7.9E-02)	2.272E+01 (1.6E+00)
143	7.100	1.083E+00	2.286E+01	1.089E+00 (7.7E-02)	2.300E+01 (1.6E+00)
144	7.150	1.081E+00	2.315E+01	1.085E+00 (7.6E-02)	2.325E+01 (1.6E+00)
145	7.200	1.078E+00	2.341E+01	1.081E+00 (7.8E-02)	2.347E+01 (1.7E+00)
146	7.250	1.073E+00	2.362E+01	1.074E+00 (7.6E-02)	2.366E+01 (1.7E+00)
147	7.300	1.065E+00	2.377E+01	1.067E+00 (7.5E-02)	2.383E+01 (1.7E+00)
148	7.350	1.055E+00	2.390E+01	1.059E+00 (7.5E-02)	2.398E+01 (1.7E+00)
149	7.400	1.047E+00	2.403E+01	1.052E+00 (7.5E-02)	2.414E+01 (1.7E+00)
150	7.450	1.041E+00	2.420E+01	1.045E+00 (7.4E-02)	2.431E+01 (1.7E+00)
151	7.500	1.035E+00	2.440E+01	1.039E+00 (7.4E-02)	2.449E+01 (1.7E+00)
152	7.550	1.031E+00	2.461E+01	1.033E+00 (7.3E-02)	2.467E+01 (1.8E+00)
153	7.600	1.025E+00	2.480E+01	1.026E+00 (7.2E-02)	2.482E+01 (1.7E+00)
154	7.650	1.017E+00	2.493E+01	1.017E+00 (7.3E-02)	2.494E+01 (1.8E+00)

H_2O at 25°C

	R	G1(R)	D1(R)	G2(R)	D2(R)
155	7.700	1.008E+00	2.504E+01	1.009E+00 (7.1E-02)	2.506E+01 (1.8E+00)
156	7.750	9.998E-01	2.516E+01	1.002E+00 (7.1E-02)	2.521E+01 (1.8E+00)
157	7.800	9.948E-01	2.536E+01	9.976E-01 (7.2E-02)	2.543E+01 (1.8E+00)
158	7.850	9.943E-01	2.567E+01	9.971E-01 (7.0E-02)	2.574E+01 (1.8E+00)
159	7.900	9.974E-01	2.608E+01	9.995E-01 (7.1E-02)	2.613E+01 (1.8E+00)
160	7.950	1.002E+00	2.653E+01	1.003E+00 (6.8E-02)	2.656E+01 (1.8E+00)
161	8.000	1.005E+00	2.696E+01	1.005E+00 (7.1E-02)	2.696E+01 (1.9E+00)
162	8.050	1.005E+00	2.730E+01	1.006E+00 (6.8E-02)	2.731E+01 (1.8E+00)
163	8.100	1.003E+00	2.756E+01	1.004E+00 (6.9E-02)	2.760E+01 (1.9E+00)
164	8.150	9.987E-01	2.779E+01	1.001E+00 (6.7E-02)	2.787E+01 (1.9E+00)
165	8.200	9.963E-01	2.807E+01	9.998E-01 (6.7E-02)	2.816E+01 (1.9E+00)
166	8.250	9.971E-01	2.843E+01	1.001E+00 (6.8E-02)	2.853E+01 (1.9E+00)
167	8.300	1.001E+00	2.889E+01	1.004E+00 (6.5E-02)	2.897E+01 (1.9E+00)
168	8.350	1.006E+00	2.940E+01	1.008E+00 (6.7E-02)	2.945E+01 (2.0E+00)
169	8.400	1.011E+00	2.988E+01	1.012E+00 (6.4E-02)	2.992E+01 (1.9E+00)
170	8.450	1.013E+00	3.029E+01	1.015E+00 (6.7E-02)	3.036E+01 (2.0E+00)
171	8.500	1.012E+00	3.064E+01	1.016E+00 (6.5E-02)	3.075E+01 (2.0E+00)
172	8.550	1.011E+00	3.096E+01	1.016E+00 (6.5E-02)	3.112E+01 (2.0E+00)
173	8.600	1.011E+00	3.132E+01	1.017E+00 (6.5E-02)	3.151E+01 (2.0E+00)
174	8.650	1.013E+00	3.176E+01	1.019E+00 (6.3E-02)	3.194E+01 (2.0E+00)
175	8.700	1.017E+00	3.226E+01	1.022E+00 (6.5E-02)	3.241E+01 (2.1E+00)
176	8.750	1.022E+00	3.277E+01	1.025E+00 (6.2E-02)	3.288E+01 (2.0E+00)
177	8.800	1.024E+00	3.323E+01	1.027E+00 (6.4E-02)	3.333E+01 (2.1E+00)
178	8.850	1.024E+00	3.360E+01	1.028E+00 (6.0E-02)	3.373E+01 (2.0E+00)
179	8.900	1.022E+00	3.392E+01	1.028E+00 (6.3E-02)	3.411E+01 (2.1E+00)
180	8.950	1.020E+00	3.425E+01	1.028E+00 (6.1E-02)	3.448E+01 (2.0E+00)
181	9.000	1.021E+00	3.465E+01	1.029E+00 (6.2E-02)	3.491E+01 (2.1E+00)
182	9.050	1.024E+00	3.515E+01	1.031E+00 (6.0E-02)	3.539E+01 (2.1E+00)
183	9.100	1.030E+00	3.572E+01	1.035E+00 (6.1E-02)	3.591E+01 (2.1E+00)
184	9.150	1.034E+00	3.628E+01	1.038E+00 (6.1E-02)	3.641E+01 (2.1E+00)
185	9.200	1.036E+00	3.674E+01	1.039E+00 (6.0E-02)	3.686E+01 (2.1E+00)
186	9.250	1.034E+00	3.708E+01	1.038E+00 (6.0E-02)	3.722E+01 (2.2E+00)
187	9.300	1.030E+00	3.732E+01	1.035E+00 (5.8E-02)	3.751E+01 (2.1E+00)
188	9.350	1.025E+00	3.754E+01	1.031E+00 (6.0E-02)	3.778E+01 (2.2E+00)
189	9.400	1.022E+00	3.783E+01	1.029E+00 (5.8E-02)	3.809E+01 (2.2E+00)
190	9.450	1.022E+00	3.824E+01	1.028E+00 (5.9E-02)	3.847E+01 (2.2E+00)
191	9.500	1.025E+00	3.874E+01	1.029E+00 (5.8E-02)	3.890E+01 (2.2E+00)
192	9.550	1.027E+00	3.925E+01	1.030E+00 (5.8E-02)	3.934E+01 (2.2E+00)
193	9.600	1.027E+00	3.967E+01	1.029E+00 (5.7E-02)	3.974E+01 (2.2E+00)
194	9.650	1.024E+00	3.996E+01	1.027E+00 (5.8E-02)	4.006E+01 (2.3E+00)
195	9.700	1.019E+00	4.016E+01	1.023E+00 (5.7E-02)	4.032E+01 (2.2E+00)
196	9.750	1.013E+00	4.033E+01	1.018E+00 (5.7E-02)	4.055E+01 (2.3E+00)
197	9.800	1.009E+00	4.060E+01	1.014E+00 (5.5E-02)	4.082E+01 (2.2E+00)
198	9.850	1.009E+00	4.100E+01	1.013E+00 (5.7E-02)	4.117E+01 (2.3E+00)
199	9.900	1.011E+00	4.153E+01	1.013E+00 (5.5E-02)	4.160E+01 (2.3E+00)
200	9.950	1.015E+00	4.210E+01	1.015E+00 (5.6E-02)	4.208E+01 (2.3E+00)
201	10.000	1.018E+00	4.263E+01	1.016E+00 (5.5E-02)	4.258E+01 (2.3E+00)

INTEGRAL (G(R)-1) = -1.935019E+00

(G(R)-1)*R**2 = 5.885043E+00

H_2O at 25°C

	S	SI(S) 1	SI(S) 2	ERROR	DELTA SI(S)
2	.077	-.049955	-.082432	.000054	.032477
3	.154	-.097968	-.163886	.000218	.065918
4	.231	-.144007	-.244918	.000495	.100911
5	.309	-.188022	-.325481	.000889	.137460
6	.386	-.229940	-.405002	.001406	.175062
7	.463	-.269668	-.482679	.002052	.213011
8	.540	-.307089	-.557890	.002837	.250801
9	.617	-.342055	-.630482	.003770	.288427
10	.694	-.374390	-.700815	.004864	.326426
11	.771	-.403947	-.769581	.006157	.365634
12	.848	-.430278	-.837031	.007619	.406752
13	.925	-.453206	-.903140	.009286	.449934
14	1.002	-.472412	-.967009	.011175	.494597
15	1.079	-.487529	-1.027107	.013310	.539579
16	1.156	-.498128	-1.081708	.015714	.583579
17	1.233	-.503715	-1.129402	.001095	.625687
18	1.310	-.502902	-1.168642	.000367	.665740
19	1.387	-.446810	-1.151123	.000469	.704313
20	1.464	-.356180	-1.098494	.000603	.742314
21	1.541	-.196394	-.976754	.000798	.780360
22	1.618	-.018134	-.836375	.001011	.818241
23	1.695	.239422	-.615347	.001296	.854769
24	1.771	.571669	-.316453	.001649	.888122
25	1.848	.900408	-.016178	.002001	.916585
26	1.925	1.201513	.262168	.002329	.939344
27	2.002	1.413476	.456552	.002580	.956924
28	2.078	1.519394	.548373	.002739	.971020
29	2.155	1.578712	.594991	.002858	.983721
30	2.231	1.546430	.549989	.002896	.996441
31	2.308	1.534940	.525870	.002955	1.009070
32	2.384	1.498532	.478757	.002993	1.019774
33	2.461	1.508929	.483278	.003074	1.025651
34	2.537	1.531394	.507388	.003168	1.024005
35	2.614	1.595867	.582127	.003301	1.013740
36	2.690	1.677675	.681470	.003452	.996205
37	2.766	1.744938	.769854	.003590	.975084
38	2.842	1.749370	.794115	.003675	.955255
39	2.918	1.715420	.774352	.003728	.941067
40	2.994	1.549571	.614856	.003662	.934715
41	3.070	1.278539	.343122	.005372	.935417
42	3.222	.733227	-.209939	.004948	.943166
43	3.374	.255912	-.677570	.004624	.933482
44	3.525	.091756	-.812526	.004665	.904282
45	3.676	.086013	-.797802	.004990	.883815
46	3.827	.207939	-.682095	.005510	.890034
47	3.978	.422622	-.487166	.006192	.909788
48	4.128	.714094	-.209998	.007010	.924092
49	4.278	1.001283	.066079	.007840	.935204
50	4.427	1.267300	.311480	.008678	.955820
51	4.576	1.488588	.504488	.009481	.984101
52	4.725	1.585256	.579553	.010131	1.005703
53	4.874	1.617016	.601670	.010695	1.015346
54	5.022	1.507859	.486892	.011094	1.020967
55	5.170	1.399512	.372809	.011521	1.026703
56	5.317	1.212235	.186914	.011842	1.025321
57	5.464	.974917	-.036356	.012119	1.011273
58	5.610	.791616	-.198920	.012497	.990536
59	5.757	.563869	-.407536	.012807	.971405
60	5.902	.429986	-.523176	.013286	.953162
61	6.047	.306887	-.624249	.021103	.931136
62	6.192	.371615	-.536327	.022593	.907943
63	6.337	.450842	-.440759	.024005	.891601
64	6.480	.773478	-.111011	.025730	.884489
65	6.624	.976321	.094611	.027361	.881709
66	6.766	1.232793	.352219	.029074	.880574
67	6.909	1.366394	.481521	.030527	.884873
68	7.051	1.351010	.453580	.031603	.897430
69	7.192	1.436416	.522515	.032916	.913901

H_2O at 50°C

	S	SI(S) 1	SI(S) 2	ERROR	DELTA SI(S)
70	7.332	1.264633	.336801	.033509	.927832
71	7.473	1.186701	.248377	.034342	.938324
72	7.612	1.064493	.116311	.035019	.948182
73	7.751	.864015	-.092336	.035399	.956350
74	7.890	.781137	-.175991	.036067	.957129
75	8.027	.633856	-.313296	.036508	.947152
76	8.164	.557652	-.371301	.037078	.928953
77	8.301	.545476	-.360412	.037684	.905889
78	8.437	.532515	-.344255	.038313	.876770
79	8.572	.553580	-.284784	.039000	.838364
80	8.707	.613626	-.177834	.039757	.791460
81	8.841	.735125	-.005936	.040618	.741062
82	8.974	.794369	.103761	.041310	.690608
83	9.107	.867202	.228240	.042018	.638962
84	9.239	.811370	.227069	.042317	.584301
85	9.370	.867659	.338922	.042898	.528736
86	9.500	.761480	.284634	.043005	.476846
87	9.630	.739264	.308812	.043353	.430452
88	9.759	.569637	.182427	.043227	.387210
89	9.887	.420074	.075286	.043155	.344788
90	10.015	.318813	.014280	.043224	.304534
91	10.142	.147655	-.121974	.038751	.269629
92	10.268	.088589	-.151982	.038985	.240571
93	10.393	-.001418	-.215717	.039182	.214299
94	10.517	-.046597	-.234614	.039418	.188017
95	10.641	-.027446	-.189938	.039790	.162493
96	10.764	-.038662	-.179233	.040218	.140371
97	10.886	.007978	-.115129	.040776	.123107
98	11.007	.006444	-.101229	.041188	.107673
99	11.127	.058771	-.032812	.041763	.091583
100	11.247	.094989	.019755	.042290	.075235
101	11.366	.088670	.027050	.042728	.061621
102	11.483	.172983	.120235	.043376	.052748
103	11.600	.164184	.116789	.043716	.047395
104	11.716	.177614	.134821	.044102	.042792
105	11.831	.143105	.105047	.044266	.038058
106	11.946	.162477	.127173	.044649	.035304
107	12.059	.211558	.174328	.045126	.037230
108	12.171	.154511	.110486	.045270	.044025
109	12.283	.116465	.063428	.045530	.053037
110	12.393	.099745	.038300	.045787	.061445
111	12.503	.069444	.000462	.045980	.068982
112	12.611	.023737	-.054097	.046104	.077835
113	12.719	-.017006	-.106963	.046222	.089957
114	12.826	.022870	-.081751	.046540	.104621
115	12.932	009763	-.108868	.046720	.118531
116	13.036	.004133	-.124763	.046918	.128896
117	13.140	.052296	-.082573	.047278	.134869
118	13.243	.054884	-.083756	.047490	.138641
119	13.345	.044691	-.098095	.047720	.142787
120	13.445	.052299	-.095701	.047905	.148000
121	13.545	.109519	-.042991	.048214	.152510
122	13.644	.135151	-.018415	.048398	.153566
123	13.838	.160320	.019304	.048581	.141016
124	14.028	.194021	.076110	.048737	.117911
125	14.214	.173212	.081129	.048666	.092083
126	14.395	.133616	.073933	.048465	.059683
127	14.572	.156827	.131173	.048454	.025654
128	14.744	.062369	.064506	.048098	-.002137
129	14.913	-.050103	-.021475	.047715	-.028628
130	15.076	-.100511	-.043636	.047437	-.056876
131	15.235	-.130130	-.053799	.047190	-.076332
132	15.389	-.173354	-.092045	.046915	-.081309
133	15.539	-.166821	-.083255	.046686	-.083566
134	15.684	-.196915	-.102020	.046325	-.094896
135	15.824	-.212662	-.103462	.045939	-.109201
136	15.959	-.194107	-.083188	.045662	-.110919

INTEGRAL(SI(S)*S) = -1.299427E+00

H_2O at 50°C

OBSERVED RADIAL DISTRIBUTION FUNCTIONS (RDF2 = 0 FROM R= 0 TO R= 2.30)

	R	G1(R)	D1(R)	G2(R)		D2(R)	
1	0	1.000E+00	0	1.000E+00	(0)	0	(0)
2	.050	6.844E+01	7.103E-02	-8.892E-01	(7.0E+00)	-9.230E-04	(7.2E-03)
3	.100	6.414E+01	2.663E-01	-6.176E-01	(5.7E+00)	-2.564E-03	(2.4E-02)
4	.150	5.743E+01	5.385E-01	-2.750E-01	(4.0E+00)	-2.569E-03	(3.8E-02)
5	.200	4.895E+01	8.129E-01	2.351E-02	(2.2E+00)	3.905E-04	(3.7E-02)
6	.250	3.950E+01	1.025E+00	1.928E-01	(1.5E+00)	5.004E-03	(3.9E-02)
7	.300	3.000E+01	1.121E+00	2.091E-01	(1.4E+00)	7.814E-03	(5.4E-02)
8	.350	2.125E+01	1.081E+00	1.123E-01	(1.3E+00)	5.710E-03	(6.8E-02)
9	.400	1.391E+01	9.242E-01	-2.001E-02	(1.0E+00)	-1.329E-03	(6.8E-02)
10	.450	8.317E+00	6.993E-01	-1.121E-01	(8.8E-01)	-9.422E-03	(7.4E-02)
11	.500	4.489E+00	4.659E-01	-1.241E-01	(8.9E-01)	-1.288E-02	(9.2E-02)
12	.550	2.183E+00	2.742E-01	-6.475E-02	(8.6E-01)	-8.133E-03	(1.1E-01)
13	.600	1.004E+00	1.501E-01	2.152E-02	(7.3E-01)	3.217E-03	(1.1E-01)
14	.650	5.407E-01	9.485E-02	8.283E-02	(6.5E-01)	1.453E-02	(1.1E-01)
15	.700	4.680E-01	9.522E-02	8.828E-02	(6.3E-01)	1.796E-02	(1.3E-01)
16	.750	5.927E-01	1.384E-01	4.178E-02	(6.1E-01)	9.758E-03	(1.4E-01)
17	.800	8.287E-01	2.202E-01	-2.433E-02	(5.4E-01)	-6.464E-03	(1.4E-01)
18	.850	1.136E+00	3.409E-01	-7.027E-02	(5.0E-01)	-2.108E-02	(1.5E-01)
19	.900	1.463E+00	4.928E-01	-7.175E-02	(4.9E-01)	-2.413E-02	(1.7E-01)
20	.950	1.716E+00	6.431E-01	-3.211E-02	(4.8E-01)	-1.203E-02	(1.8E-01)
21	1.000	1.788E+00	7.425E-01	2.204E-02	(4.3E-01)	9.151E-03	(1.8E-01)
22	1.050	1.603E+00	7.340E-01	5.787E-02	(4.1E-01)	2.649E-02	(1.9E-01)
23	1.100	1.168E+00	5.867E-01	5.567E-02	(4.1E-01)	2.797E-02	(2.0E-01)
24	1.150	5.827E-01	3.200E-01	1.929E-02	(4.0E-01)	1.059E-02	(2.2E-01)
25	1.200	1.308E-02	7.821E-03	-2.760E-02	(3.6E-01)	-1.650E-02	(2.2E-01)
26	1.250	-3.780E-01	-2.452E-01	-5.646E-02	(3.4E-01)	-3.663E-02	(2.2E-01)
27	1.300	-4.962E-01	-3.482E-01	-5.087E-02	(3.4E-01)	-3.569E-02	(2.4E-01)
28	1.350	-3.534E-01	-2.674E-01	-1.561E-02	(3.3E-01)	-1.181E-02	(2.5E-01)
29	1.400	-5.593E-02	-4.551E-02	2.705E-02	(3.1E-01)	2.201E-02	(2.5E-01)
30	1.450	2.466E-01	2.153E-01	5.120E-02	(3.0E-01)	4.469E-02	(2.6E-01)
31	1.500	4.291E-01	4.009E-01	4.292E-02	(3.0E-01)	4.009E-02	(2.8E-01)
32	1.550	4.401E-01	4.390E-01	8.253E-03	(2.9E-01)	8.233E-03	(2.9E-01)
33	1.600	3.121E-01	3.317E-01	-3.080E-02	(2.7E-01)	-3.273E-02	(2.9E-01)
34	1.650	1.316E-01	1.488E-01	-4.987E-02	(2.6E-01)	-5.637E-02	(3.0E-01)
35	1.700	-1.185E-02	-1.421E-02	-3.708E-02	(2.6E-01)	-4.450E-02	(3.2E-01)
36	1.750	-7.119E-02	-9.053E-02	-3.637E-04	(2.6E-01)	-4.625E-04	(3.3E-01)
37	1.800	-5.761E-02	-7.750E-02	3.735E-02	(2.4E-01)	5.024E-02	(3.3E-01)
38	1.850	-2.369E-02	-3.367E-02	5.211E-02	(2.4E-01)	7.404E-02	(3.4E-01)
39	1.900	-2.593E-02	-3.886E-02	3.401E-02	(2.3E-01)	5.097E-02	(3.5E-01)
40	1.950	-8.955E-02	-1.414E-01	-5.952E-03	(2.3E-01)	-9.398E-03	(3.6E-01)
41	2.000	-1.952E-01	-3.242E-01	-4.150E-02	(2.2E-01)	-6.943E-02	(3.6E-01)
42	2.050	-2.934E-01	-5.179E-01	-4.847E-02	(2.1E-01)	-8.457E-02	(3.7E-01)
43	2.100	-3.364E-01	-6.159E-01	-1.864E-02	(2.1E-01)	-3.413E-02	(3.9E-01)
44	2.150	-3.081E-01	-5.912E-01	2.949E-02	(2.1E-01)	5.659E-02	(4.0E-01)
45	2.200	-2.342E-01	-4.709E-01	5.947E-02	(2.0E-01)	1.195E-01	(4.0E-01)
46	2.250	-1.666E-01	-3.502E-01	3.637E-02	(1.9E-01)	7.645E-02	(4.1E-01)
47	2.300	-1.503E-01	-3.301E-01	-5.040E-02	(1.9E-01)	-1.107E-01	(4.2E-01)
48	2.350	-1.925E-01	-4.414E-01	-1.734E-01	(1.9E-01)	-3.977E-01	(4.3E-01)
49	2.400	-2.509E-01	-6.001E-01	-2.711E-01	(1.8E-01)	-6.482E-01	(4.3E-01)
50	2.450	-2.491E-01	-6.208E-01	-2.687E-01	(1.8E-01)	-6.696E-01	(4.4E-01)
51	2.500	-1.115E-01	-2.892E-01	-1.091E-01	(1.8E-01)	-2.832E-01	(4.6E-01)
52	2.550	1.986E-01	5.361E-01	2.218E-01	(1.7E-01)	5.988E-01	(4.6E-01)
53	2.600	6.570E-01	1.844E+00	6.853E-01	(1.7E-01)	1.924E+00	(4.7E-01)
54	2.650	1.185E+00	3.454E+00	1.201E+00	(1.6E-01)	3.501E+00	(4.8E-01)
55	2.700	1.675E+00	5.071E+00	1.672E+00	(1.6E-01)	5.062E+00	(5.0E-01)
56	2.750	2.037E+00	6.396E+00	2.020E+00	(1.6E-01)	6.344E+00	(5.0E-01)
57	2.800	2.220E+00	7.228E+00	2.204E+00	(1.5E-01)	7.173E+00	(5.0E-01)
58	2.850	2.232E+00	7.526E+00	2.226E+00	(1.5E-01)	7.508E+00	(5.2E-01)
59	2.900	2.118E+00	7.396E+00	2.128E+00	(1.5E-01)	7.431E+00	(5.3E-01)
60	2.950	1.943E+00	7.022E+00	1.962E+00	(1.5E-01)	7.091E+00	(5.3E-01)
61	3.000	1.760E+00	6.578E+00	1.777E+00	(1.4E-01)	6.640E+00	(5.4E-01)
62	3.050	1.596E+00	6.165E+00	1.601E+00	(1.4E-01)	6.185E+00	(5.5E-01)
63	3.100	1.455E+00	5.804E+00	1.447E+00	(1.4E-01)	5.772E+00	(5.7E-01)
64	3.150	1.327E+00	5.466E+00	1.312E+00	(1.4E-01)	5.405E+00	(5.7E-01)
65	3.200	1.208E+00	5.134E+00	1.195E+00	(1.4E-01)	5.082E+00	(5.8E-01)
66	3.250	1.102E+00	4.832E+00	1.099E+00	(1.3E-01)	4.821E+00	(5.9E-01)
67	3.300	1.023E+00	4.625E+00	1.030E+00	(1.3E-01)	4.659E+00	(6.0E-01)
68	3.350	9.830E-01	4.580E+00	9.948E-01	(1.3E-01)	4.635E+00	(6.1E-01)

H_2O at 50°C

	R	G1(R)	D1(R)	G2(R)		D2(R)	
69	3.400	9.838E-01	4.722E+00	9.916E-01	(1.3E-01)	4.759E+00	(6.1E-01)
70	3.450	1.013E+00	5.006E+00	1.011E+00	(1.3E-01)	4.998E+00	(6.2E-01)
71	3.500	1.049E+00	5.335E+00	1.038E+00	(1.3E-01)	5.281E+00	(6.4E-01)
72	3.550	1.071E+00	5.602E+00	1.057E+00	(1.2E-01)	5.530E+00	(6.4E-01)
73	3.600	1.068E+00	5.746E+00	1.058E+00	(1.2E-01)	5.693E+00	(6.5E-01)
74	3.650	1.044E+00	5.775E+00	1.043E+00	(1.2E-01)	5.767E+00	(6.7E-01)
75	3.700	1.013E+00	5.758E+00	1.019E+00	(1.2E-01)	5.791E+00	(6.8E-01)
76	3.750	9.902E-01	5.781E+00	9.980E-01	(1.2E-01)	5.827E+00	(6.8E-01)
77	3.800	9.838E-01	5.898E+00	9.876E-01	(1.1E-01)	5.921E+00	(6.8E-01)
78	3.850	9.923E-01	6.107E+00	9.886E-01	(1.1E-01)	6.084E+00	(7.0E-01)
79	3.900	1.006E+00	6.353E+00	9.963E-01	(1.1E-01)	6.291E+00	(7.2E-01)
80	3.950	1.014E+00	6.570E+00	1.003E+00	(1.1E-01)	6.500E+00	(7.2E-01)
81	4.000	1.011E+00	6.717E+00	1.005E+00	(1.1E-01)	6.675E+00	(7.2E-01)
82	4.050	9.991E-01	6.804E+00	1.000E+00	(1.1E-01)	6.811E+00	(7.4E-01)
83	4.100	9.860E-01	6.881E+00	9.927E-01	(1.1E-01)	6.928E+00	(7.5E-01)
84	4.150	9.798E-01	7.006E+00	9.875E-01	(1.1E-01)	7.061E+00	(7.5E-01)
85	4.200	9.841E-01	7.208E+00	9.879E-01	(1.0E-01)	7.235E+00	(7.6E-01)
86	4.250	9.961E-01	7.470E+00	9.938E-01	(1.0E-01)	7.453E+00	(7.8E-01)
87	4.300	1.009E+00	7.746E+00	1.002E+00	(1.0E-01)	7.695E+00	(7.9E-01)
88	4.350	1.017E+00	7.989E+00	1.010E+00	(1.0E-01)	7.937E+00	(8.0E-01)
89	4.400	1.018E+00	8.185E+00	1.016E+00	(1.0E-01)	8.168E+00	(8.0E-01)
90	4.450	1.017E+00	8.364E+00	1.021E+00	(9.9E-02)	8.397E+00	(8.1E-01)
91	4.500	1.021E+00	8.582E+00	1.029E+00	(9.9E-02)	8.651E+00	(8.3E-01)
92	4.550	1.034E+00	8.885E+00	1.042E+00	(9.6E-02)	8.956E+00	(8.3E-01)
93	4.600	1.056E+00	9.277E+00	1.060E+00	(9.5E-02)	9.316E+00	(8.4E-01)
94	4.650	1.082E+00	9.712E+00	1.081E+00	(9.4E-02)	9.704E+00	(8.5E-01)
95	4.700	1.102E+00	1.011E+01	1.098E+00	(9.3E-02)	1.007E+01	(8.5E-01)
96	4.750	1.110E+00	1.040E+01	1.106E+00	(9.2E-02)	1.036E+01	(8.6E-01)
97	4.800	1.102E+00	1.054E+01	1.102E+00	(9.1E-02)	1.054E+01	(8.7E-01)
98	4.850	1.082E+00	1.056E+01	1.086E+00	(9.0E-02)	1.061E+01	(8.8E-01)
99	4.900	1.056E+00	1.052E+01	1.063E+00	(8.9E-02)	1.060E+01	(8.9E-01)
100	4.950	1.030E+00	1.048E+01	1.037E+00	(8.8E-02)	1.055E+01	(8.9E-01)
101	5.000	1.010E+00	1.048E+01	1.012E+00	(8.7E-02)	1.051E+01	(9.1E-01)
102	5.050	9.933E-01	1.052E+01	9.917E-01	(8.7E-02)	1.050E+01	(9.3E-01)
103	5.100	9.791E-01	1.057E+01	9.747E-01	(8.6E-02)	1.053E+01	(9.2E-01)
104	5.150	9.641E-01	1.062E+01	9.604E-01	(8.4E-02)	1.058E+01	(9.2E-01)
105	5.200	9.480E-01	1.064E+01	9.473E-01	(8.4E-02)	1.064E+01	(9.4E-01)
106	5.250	9.322E-01	1.067E+01	9.352E-01	(8.4E-02)	1.070E+01	(9.6E-01)
107	5.300	9.197E-01	1.073E+01	9.244E-01	(8.2E-02)	1.078E+01	(9.6E-01)
108	5.350	9.120E-01	1.084E+01	9.155E-01	(8.2E-02)	1.088E+01	(9.7E-01)
109	5.400	9.091E-01	1.101E+01	9.091E-01	(8.1E-02)	1.101E+01	(9.9E-01)
110	5.450	9.088E-01	1.121E+01	9.050E-01	(8.0E-02)	1.116E+01	(9.9E-01)
111	5.500	9.086E-01	1.141E+01	9.031E-01	(8.0E-02)	1.134E+01	(1.0E+00)
112	5.550	9.074E-01	1.161E+01	9.029E-01	(7.9E-02)	1.155E+01	(1.0E+00)
113	5.600	9.061E-01	1.180E+01	9.044E-01	(7.7E-02)	1.178E+01	(1.0E+00)
114	5.650	9.066E-01	1.202E+01	9.080E-01	(7.8E-02)	1.203E+01	(1.0E+00)
115	5.700	9.108E-01	1.229E+01	9.133E-01	(7.7E-02)	1.232E+01	(1.0E+00)
116	5.750	9.185E-01	1.261E+01	9.196E-01	(7.5E-02)	1.262E+01	(1.0E+00)
117	5.800	9.275E-01	1.296E+01	9.256E-01	(7.5E-02)	1.293E+01	(1.1E+00)
118	5.850	9.346E-01	1.328E+01	9.300E-01	(7.6E-02)	1.321E+01	(1.1E+00)
119	5.900	9.374E-01	1.355E+01	9.319E-01	(7.4E-02)	1.347E+01	(1.1E+00)
120	5.950	9.358E-01	1.376E+01	9.320E-01	(7.3E-02)	1.370E+01	(1.1E+00)
121	6.000	9.324E-01	1.394E+01	9.316E-01	(7.4E-02)	1.392E+01	(1.1E+00)
122	6.050	9.310E-01	1.415E+01	9.328E-01	(7.2E-02)	1.418E+01	(1.1E+00)
123	6.100	9.345E-01	1.444E+01	9.370E-01	(7.2E-02)	1.448E+01	(1.1E+00)
124	6.150	9.435E-01	1.482E+01	9.447E-01	(7.2E-02)	1.483E+01	(1.1E+00)
125	6.200	9.562E-01	1.526E+01	9.548E-01	(7.0E-02)	1.524E+01	(1.1E+00)
126	6.250	9.694E-01	1.572E+01	9.660E-01	(7.0E-02)	1.567E+01	(1.1E+00)
127	6.300	9.804E-01	1.616E+01	9.769E-01	(7.0E-02)	1.610E+01	(1.1E+00)
128	6.350	9.887E-01	1.655E+01	9.872E-01	(6.8E-02)	1.653E+01	(1.1E+00)
129	6.400	9.959E-01	1.694E+01	9.973E-01	(6.9E-02)	1.696E+01	(1.2E+00)
130	6.450	1.004E+00	1.735E+01	1.008E+00	(6.8E-02)	1.741E+01	(1.2E+00)
131	6.500	1.016E+00	1.782E+01	1.020E+00	(6.7E-02)	1.789E+01	(1.2E+00)
132	6.550	1.030E+00	1.835E+01	1.032E+00	(6.6E-02)	1.839E+01	(1.2E+00)
133	6.600	1.044E+00	1.889E+01	1.044E+00	(6.6E-02)	1.889E+01	(1.2E+00)
134	6.650	1.056E+00	1.939E+01	1.054E+00	(6.6E-02)	1.935E+01	(1.2E+00)
135	6.700	1.063E+00	1.980E+01	1.061E+00	(6.5E-02)	1.977E+01	(1.2E+00)
136	6.750	1.064E+00	2.013E+01	1.065E+00	(6.5E-02)	2.014E+01	(1.2E+00)
137	6.800	1.063E+00	2.042E+01	1.066E+00	(6.4E-02)	2.047E+01	(1.2E+00)

H_2O at 50°C

	R	G1(R)	D1(R)	G2(R)	D2(R)
138	6.850	1.062E+00	2.070E+01	1.067E+00 (6.4E-02)	2.079E+01 (1.3E+00)
139	6.900	1.063E+00	2.101E+01	1.067E+00 (6.3E-02)	2.110E+01 (1.3E+00)
140	6.950	1.065E+00	2.135E+01	1.067E+00 (6.2E-02)	2.140E+01 (1.2E+00)
141	7.000	1.066E+00	2.168E+01	1.066E+00 (6.3E-02)	2.168E+01 (1.3E+00)
142	7.050	1.064E+00	2.196E+01	1.062E+00 (6.3E-02)	2.192E+01 (1.3E+00)
143	7.100	1.059E+00	2.216E+01	1.057E+00 (6.2E-02)	2.213E+01 (1.3E+00)
144	7.150	1.051E+00	2.231E+01	1.051E+00 (6.1E-02)	2.231E+01 (1.3E+00)
145	7.200	1.043E+00	2.244E+01	1.045E+00 (6.1E-02)	2.249E+01 (1.3E+00)
146	7.250	1.037E+00	2.252E+01	1.040E+00 (6.1E-02)	2.270E+01 (1.3E+00)
147	7.300	1.034E+00	2.287E+01	1.036E+00 (5.9E-02)	2.293E+01 (1.3E+00)
148	7.350	1.032E+00	2.315E+01	1.033E+00 (6.0E-02)	2.317E+01 (1.3E+00)
149	7.400	1.030E+00	2.342E+01	1.028E+00 (6.0E-02)	2.338E+01 (1.4E+00)
150	7.450	1.024E+00	2.360E+01	1.021E+00 (5.9E-02)	2.353E+01 (1.4E+00)
151	7.500	1.015E+00	2.371E+01	1.012E+00 (5.9E-02)	2.364E+01 (1.4E+00)
152	7.550	1.004E+00	2.377E+01	1.003E+00 (5.8E-02)	2.373E+01 (1.4E+00)
153	7.600	9.949E-01	2.386E+01	9.953E-01 (5.7E-02)	2.387E+01 (1.4E+00)
154	7.650	9.902E-01	2.406E+01	9.917E-01 (5.8E-02)	2.410E+01 (1.4E+00)
155	7.700	9.910E-01	2.439E+01	9.919E-01 (5.6E-02)	2.442E+01 (1.4E+00)
156	7.750	9.950E-01	2.487E+01	9.941E-01 (5.7E-02)	2.479E+01 (1.4E+00)
157	7.800	9.985E-01	2.522E+01	9.957E-01 (5.7E-02)	2.515E+01 (1.4E+00)
158	7.850	9.977E-01	2.553E+01	9.939E-01 (5.5E-02)	2.543E+01 (1.4E+00)
159	7.900	9.913E-01	2.569E+01	9.880E-01 (5.6E-02)	2.560E+01 (1.5E+00)
160	7.950	9.809E-01	2.574E+01	9.792E-01 (5.4E-02)	2.570E+01 (1.4E+00)
161	8.000	9.703E-01	2.578E+01	9.705E-01 (5.6E-02)	2.579E+01 (1.5E+00)
162	8.050	9.637E-01	2.593E+01	9.647E-01 (5.4E-02)	2.596E+01 (1.5E+00)
163	8.100	9.631E-01	2.624E+01	9.636E-01 (5.4E-02)	2.625E+01 (1.5E+00)
164	8.150	9.680E-01	2.659E+01	9.670E-01 (5.3E-02)	2.667E+01 (1.5E+00)
165	8.200	9.750E-01	2.722E+01	9.726E-01 (5.4E-02)	2.715E+01 (1.5E+00)
166	8.250	9.805E-01	2.771E+01	9.777E-01 (5.4E-02)	2.763E+01 (1.5E+00)
167	8.300	9.822E-01	2.809E+01	9.803E-01 (5.2E-02)	2.804E+01 (1.5E+00)
168	8.350	9.804E-01	2.838E+01	9.803E-01 (5.3E-02)	2.838E+01 (1.5E+00)
169	8.400	9.775E-01	2.864E+01	9.791E-01 (5.1E-02)	2.868E+01 (1.5E+00)
170	8.450	9.768E-01	2.896E+01	9.791E-01 (5.3E-02)	2.902E+01 (1.6E+00)
171	8.500	9.801E-01	2.940E+01	9.818E-01 (5.1E-02)	2.945E+01 (1.5E+00)
172	8.550	9.872E-01	2.996E+01	9.874E-01 (5.1E-02)	2.997E+01 (1.6E+00)
173	8.600	9.955E-01	3.057E+01	9.945E-01 (5.1E-02)	3.054E+01 (1.6E+00)
174	8.650	1.002E+00	3.113E+01	1.001E+00 (5.1E-02)	3.109E+01 (1.6E+00)
175	8.700	1.005E+00	3.157E+01	1.002E+00 (5.1E-02)	3.157E+01 (1.6E+00)
176	8.750	1.003E+00	3.189E+01	1.005E+00 (4.9E-02)	3.195E+01 (1.6E+00)
177	8.800	9.999E-01	3.215E+01	1.003E+00 (5.1E-02)	3.225E+01 (1.6E+00)
178	8.850	9.973E-01	3.243E+01	1.001E+00 (4.8E-02)	3.254E+01 (1.6E+00)
179	8.900	9.975E-01	3.280E+01	9.998E-01 (5.0E-02)	3.288E+01 (1.7E+00)
180	8.950	1.000E+00	3.327E+01	1.001E+00 (4.8E-02)	3.329E+01 (1.6E+00)
181	9.000	1.004E+00	3.378E+01	1.004E+00 (5.0E-02)	3.376E+01 (1.7E+00)
182	9.050	1.008E+00	3.426E+01	1.007E+00 (4.8E-02)	3.424E+01 (1.6E+00)
183	9.100	1.008E+00	3.467E+01	1.009E+00 (4.8E-02)	3.468E+01 (1.7E+00)
184	9.150	1.007E+00	3.500E+01	1.009E+00 (4.8E-02)	3.507E+01 (1.7E+00)
185	9.200	1.005E+00	3.530E+01	1.008E+00 (4.8E-02)	3.541E+01 (1.7E+00)
186	9.250	1.003E+00	3.563E+01	1.006E+00 (4.8E-02)	3.574E+01 (1.7E+00)
187	9.300	1.004E+00	3.604E+01	1.005E+00 (4.6E-02)	3.609E+01 (1.7E+00)
188	9.350	1.006E+00	3.652E+01	1.005E+00 (4.8E-02)	3.649E+01 (1.7E+00)
189	9.400	1.009E+00	3.700E+01	1.006E+00 (4.6E-02)	3.692E+01 (1.7E+00)
190	9.450	1.009E+00	3.742E+01	1.007E+00 (4.7E-02)	3.734E+01 (1.7E+00)
191	9.500	1.007E+00	3.775E+01	1.006E+00 (4.5E-02)	3.771E+01 (1.7E+00)
192	9.550	1.003E+00	3.799E+01	1.004E+00 (4.6E-02)	3.802E+01 (1.8E+00)
193	9.600	9.985E-01	3.821E+01	1.000E+00 (4.6E-02)	3.827E+01 (1.7E+00)
194	9.650	9.950E-01	3.847E+01	9.966E-01 (4.6E-02)	3.853E+01 (1.8E+00)
195	9.700	9.943E-01	3.884E+01	9.942E-01 (4.5E-02)	3.884E+01 (1.7E+00)
196	9.750	9.963E-01	3.932E+01	9.940E-01 (4.5E-02)	3.923E+01 (1.8E+00)
197	9.800	9.996E-01	3.986E+01	9.957E-01 (4.4E-02)	3.971E+01 (1.7E+00)
198	9.850	1.002E+00	4.038E+01	9.986E-01 (4.5E-02)	4.023E+01 (1.8E+00)
199	9.900	1.003E+00	4.083E+01	1.001E+00 (4.3E-02)	4.074E+01 (1.8E+00)
200	9.950	1.002E+00	4.119E+01	1.003E+00 (4.4E-02)	4.121E+01 (1.8E+00)
201	10.000	9.992E-01	4.149E+01	1.002E+00 (4.3E-02)	4.161E+01 (1.8E+00)

INTEGRAL(G(R)-1) = -2.228799E+00
(G(R)-1)*R**2 = -2.579413E+00

H_2O at 50°C

	S	SI(S) 1	SI(S) 2	ERROR	DELTA SI(S)
2	.077	-.050292	-.088002	.000037	.037709
3	.154	-.099282	-.174758	.000153	.075476
4	.231	-.146984	-.260147	.000352	.113263
5	.309	-.193002	-.343880	.000642	.150878
6	.386	-.237521	-.425506	.001031	.187985
7	.463	-.280308	-.504488	.001526	.224180
8	.540	-.321209	-.580308	.002139	.259099
9	.617	-.360045	-.652569	.002882	.292524
10	.694	-.396605	-.721034	.003767	.324429
11	.771	-.430821	-.785756	.004832	.354935
12	.848	-.462005	-.846207	.006056	.384202
13	.925	-.490023	-.902303	.007473	.412280
14	1.002	-.514513	-.953519	.009105	.439006
15	1.079	-.535063	-.999066	.010974	.464004
16	1.156	-.551196	-1.037982	.013110	.486786
17	1.233	-.562364	-1.069311	.000929	.506947
18	1.310	-.567407	-1.091735	.000357	.524328
19	1.387	-.526574	-1.065667	.000460	.539093
20	1.464	-.464940	-1.016583	.000584	.551643
21	1.541	-.359248	-.921647	.000754	.562399
22	1.618	-.226072	-.797620	.000953	.571549
23	1.695	-.027555	-.606448	.001220	.578893
24	1.771	.227060	-.356816	.001547	.583875
25	1.848	.505706	-.080114	.001900	.585820
26	1.925	.773388	.189108	.002243	.584280
27	2.002	.933746	.354426	.002479	.579320
28	2.078	1.040815	.469224	.002662	.571591
29	2.155	1.103918	.541812	.002802	.562106
30	2.231	1.190610	.638818	.002969	.551792
31	2.308	1.146654	.605629	.003003	.541025
32	2.384	1.070416	.541067	.003007	.529349
33	2.461	1.106551	.590972	.003127	.515579
34	2.537	1.079086	.580811	.003184	.498275
35	2.614	1.109513	.633094	.003302	.476419
36	2.690	1.133066	.683060	.003415	.450006
37	2.766	1.096858	.676589	.003468	.420269
38	2.842	1.071112	.681726	.003535	.389386
39	2.918	.948065	.588296	.003503	.359769
40	2.994	.811639	.478457	.003459	.333182
41	3.070	.468894	.158814	.005053	.310080
42	3.222	.032240	-.236925	.004684	.269165
43	3.374	-.335708	-.556822	.004478	.221115
44	3.525	-.557725	-.716488	.004527	.158764
45	3.676	-.624588	-.717397	.004851	.092810
46	3.827	-.592872	-.628291	.005372	.035419
47	3.978	-.491383	-.475711	.006065	-.015672
48	4.128	-.231783	-.161693	.006843	-.070090
49	4.278	-.030863	.098103	.007691	-.128966
50	4.427	.098775	.284127	.008461	-.185352
51	4.576	.232612	.469957	.009275	-.237344
52	4.725	.280330	.571662	.009972	-.291333
53	4.874	.163038	.514726	.010390	-.351688
54	5.022	.004590	.419896	.010787	-.415306
55	5.170	-.148851	.330274	.011226	-.479125
56	5.317	-.410256	.136383	.011485	-.546538
57	5.464	-.718761	-.096067	.011696	-.622694
58	5.610	-.960810	-.254513	.012051	-.706297
59	5.757	-1.196131	-.402702	.012416	-.793429
60	5.902	-1.363130	-.478896	.012936	-.884235
61	6.047	-1.440067	-.457852	.013638	-.982215
62	6.192	-1.455140	-.367749	.014462	-1.087391
63	6.337	-1.438401	-.243181	.015303	-1.195219
64	6.480	-1.389816	-.087166	.016251	-1.302650
65	6.624	-1.368215	.042662	.017147	-1.410877
66	6.766	-1.248478	.272049	.018190	-1.520327
67	6.909	-1.270036	.357712	.022249	-1.627748
68	7.051	-1.329929	.397702	.023070	-1.727631
69	7.192	-1.435058	.384004	.023755	-1.819062

H_2O at 75°C

	S	SI(S) 1	SI(S) 2	ERROR	DELTA SI(S)
70	7.332	-1.588607	.314550	.024300	-1.903157
71	7.473	-1.759741	.218514	.024779	-1.978256
72	7.612	-1.988021	.051809	.025077	-2.039830
73	7.751	-2.135794	-.050512	.025482	-2.085282
74	7.890	-2.293935	-.178088	.025837	-2.111547
75	8.027	-2.434375	-.301574	.026181	-2.132801
76	8.164	-2.423914	-.289654	.026841	-2.134260
77	8.301	-2.448002	-.330399	.027286	-2.117603
78	8.437	-2.360914	-.277409	.028037	-2.083505
79	8.572	-2.217669	-.182367	.028901	-2.035301
80	8.707	-2.072742	-.097916	.029736	-1.974826
81	8.841	-1.867264	.033933	.030665	-1.901197
82	8.974	-1.740251	.073947	.031402	-1.814198
83	9.107	-1.534727	.182214	.032329	-1.716941
84	9.239	-1.368677	.245117	.033131	-1.513795
85	9.370	-1.261290	.245463	.033731	-1.506754
86	9.500	-1.166678	.228855	.034318	-1.395533
87	9.630	-1.061462	.219558	.034929	-1.281020
88	9.759	-1.030299	.136597	.035321	-1.166896
89	9.887	-1.017861	.039242	.035663	-1.057103
90	10.015	-.975214	-.022399	.036091	-.952815
91	10.142	-.943227	-.090116	.036490	-.853110
92	10.268	-.935499	-.177260	.036805	-.758219
93	10.393	-.832130	-.161382	.037430	-.670748
94	10.517	-.804366	-.211091	.037853	-.593275
95	10.641	-.698048	-.172390	.038532	-.525658
96	10.764	-.598364	-.132703	.039275	-.465561
97	10.886	-.504451	-.092494	.039958	-.411957
98	11.007	-.398540	-.033284	.040770	-.365557
99	11.127	-.289374	.038535	.041376	-.327909
100	11.247	-.210814	.087438	.042024	-.298253
101	11.366	-.236790	.036827	.042439	-.273616
102	11.483	-.159605	.091826	.043059	-.251432
103	11.600	-.141468	.090052	.043474	-.231521
104	11.716	-.152388	.062744	.043775	-.219133
105	11.831	-.069447	.132874	.044301	-.202321
106	11.946	-.093495	.097342	.044542	-.190537
107	12.059	-.096484	.081329	.044850	-.177813
108	12.171	-.110745	.051502	.045124	-.162247
109	12.283	-.134566	.010936	.045426	-.145501
110	12.393	-.136003	-.026677	.045553	-.129325
111	12.503	-.121754	-.008112	.046061	-.113642
112	12.611	-.130606	-.034163	.046300	-.096443
113	12.719	-.112621	-.036758	.046605	-.075863
114	12.826	-.104280	-.052053	.046824	-.052207
115	12.932	-.122923	-.095026	.046989	-.027896
116	13.038	-.128460	-.123027	.047189	-.005433
117	13.140	-.057441	-.072070	.047625	.014628
118	13.243	-.045056	-.078904	.047872	.033848
119	13.345	.027028	-.027150	.048363	.054178
120	13.445	.054080	-.021909	.048612	.075989
121	13.545	.075578	-.021975	.048815	.097552
122	13.644	.089959	-.026291	.048968	.116259
123	13.838	.187101	.046948	.049380	.140153
124	14.028	.222170	.070409	.049547	.151761
125	14.214	.227528	.071208	.049559	.156320
126	14.395	.183864	.034460	.049352	.149404
127	14.572	.199554	.065732	.049327	.133823
128	14.744	.131420	.015632	.049050	.115788
129	14.913	.058707	-.033705	.048782	.092413
130	15.076	.037246	-.025549	.048587	.062795
131	15.235	-.014402	-.050716	.048284	.036314
132	15.389	.019546	.001453	.048215	.018093
133	15.539	-.031859	-.032331	.047838	.000472
134	15.684	-.139375	-.116250	.047285	-.023125
135	15.824	-.105786	-.060498	.047025	-.046288
136	15.959	-.143089	-.085353	.046620	-.057736

INTEGRAL(SI(S)*S) = -1.098199E+00

H_2O at 75°C

OBSERVED RADIAL DISTRIBUTION FUNCTIONS (RDF2 = 0 FROM R= 0 TO R= 2.30)

	R	G1(R)	D1(R)	G2(R)	D2(R)
1	0	1.000E+00	0	1.000E+00 (0)	0 (0)
2	.050	-9.630E-01	-9.853E-02	-6.332E-01 (8.6E+00)	-6.485E-04 (5.8E-03)
3	.100	-8.786E-01	-3.599E-01	-4.402E-01 (5.4E+00)	-1.803E-03 (2.2E-02)
4	.150	-7.479E-01	-6.804E-01	-1.959E-01 (3.7E+00)	-1.815E-03 (3.4E-02)
5	.200	-5.848E-01	-9.583E-01	1.471E-02 (2.0E+00)	2.410E-04 (3.2E-02)
6	.250	-4.062E-01	-1.040E+00	1.342E-01 (1.3E+00)	3.435E-03 (3.4E-02)
7	.300	-2.299E-01	-8.475E-01	1.449E-01 (1.3E+00)	5.342E-03 (5.0E-02)
8	.350	-7.225E-00	-3.696E-01	7.551E-02 (1.3E+00)	3.794E-03 (6.4E-02)
9	.400	5.369E+00	3.519E-01	-1.811E-02 (9.8E-01)	-1.187E-03 (6.4E-02)
10	.450	1.402E+01	1.163E+00	-8.246E-02 (8.2E-01)	-5.841E-03 (6.8E-02)
11	.500	1.853E+01	1.898E+00	-8.950E-02 (8.2E-01)	-9.166E-03 (8.4E-02)
12	.550	1.929E+01	2.390E+00	-4.587E-02 (7.9E-01)	-5.884E-03 (9.8E-02)
13	.600	1.714E+01	2.528E+00	1.627E-02 (6.6E-01)	2.400E-03 (9.8E-02)
14	.650	1.318E+01	2.282E+00	5.980E-02 (5.9E-01)	1.035E-02 (1.0E-01)
15	.700	8.562E+00	1.719E+00	6.291E-02 (5.9E-01)	1.263E-02 (1.2E-01)
16	.750	4.244E+00	9.780E-01	2.887E-02 (5.7E-01)	6.653E-03 (1.3E-01)
17	.800	8.781E-01	2.302E-01	-1.875E-02 (4.9E-01)	-4.915E-03 (1.3E-01)
18	.850	-1.258E+00	-3.725E-01	-5.128E-02 (4.6E-01)	-1.518E-02 (1.4E-01)
19	.900	-2.218E+00	-7.361E-01	-5.144E-02 (4.6E-01)	-1.707E-02 (1.5E-01)
20	.950	-2.274E+00	-8.408E-01	-2.199E-02 (4.4E-01)	-8.129E-03 (1.6E-01)
21	1.000	-1.781E+00	-7.296E-01	1.760E-02 (4.0E-01)	7.212E-03 (1.6E-01)
22	1.050	-1.060E+00	-4.786E-01	4.352E-02 (3.8E-01)	1.965E-02 (1.7E-01)
23	1.100	-3.278E-01	-1.625E-01	4.157E-02 (3.8E-01)	2.061E-02 (1.9E-01)
24	1.150	3.079E-01	1.648E-01	1.473E-02 (3.6E-01)	7.980E-03 (2.0E-01)
25	1.200	8.166E-01	4.817E-01	-1.966E-02 (3.3E-01)	-1.159E-02 (2.0E-01)
26	1.250	1.194E+00	7.641E-01	-4.075E-02 (3.2E-01)	-2.608E-02 (2.0E-01)
27	1.300	1.425E+00	9.843E-01	-3.657E-02 (3.2E-01)	-2.532E-02 (2.2E-01)
28	1.350	1.479E+00	1.104E+00	-1.060E-02 (3.1E-01)	-7.914E-03 (2.3E-01)
29	1.400	1.332E+00	1.070E+00	2.085E-02 (2.8E-01)	1.674E-02 (2.3E-01)
30	1.450	9.939E-01	8.561E-01	3.877E-02 (2.8E-01)	3.339E-02 (2.4E-01)
31	1.500	5.278E-01	4.865E-01	3.276E-02 (2.8E-01)	3.020E-02 (2.6E-01)
32	1.550	4.252E-02	4.184E-02	7.056E-03 (2.7E-01)	6.945E-03 (2.6E-01)
33	1.600	-3.416E-01	-3.583E-01	-2.231E-02 (2.5E-01)	-2.339E-02 (2.6E-01)
34	1.650	-5.373E-01	-5.902E-01	-3.725E-02 (2.4E-01)	-4.155E-02 (2.7E-01)
35	1.700	-5.229E-01	-6.191E-01	-2.861E-02 (2.4E-01)	-3.387E-02 (2.9E-01)
36	1.750	-3.494E-01	-4.383E-01	-1.656E-03 (2.4E-01)	-2.077E-03 (3.0E-01)
37	1.800	-1.148E-01	-1.524E-01	2.696E-02 (2.2E-01)	3.578E-02 (3.0E-01)
38	1.850	7.802E-02	1.094E-01	3.926E-02 (2.2E-01)	5.505E-02 (3.1E-01)
39	1.900	1.639E-01	2.424E-01	2.702E-02 (2.2E-01)	3.996E-02 (3.2E-01)
40	1.950	1.368E-01	2.130E-01	-2.778E-03 (2.1E-01)	-4.327E-03 (3.3E-01)
41	2.000	4.210E-02	6.900E-02	-3.151E-02 (2.0E-01)	-5.164E-02 (3.3E-01)
42	2.050	-5.278E-02	-9.087E-02	-3.998E-02 (2.0E-01)	-6.883E-02 (3.4E-01)
43	2.100	-9.576E-02	-1.730E-01	-2.071E-02 (2.0E-01)	-3.742E-02 (3.5E-01)
44	2.150	-7.440E-02	-1.409E-01	1.576E-02 (1.9E-01)	2.984E-02 (3.6E-01)
45	2.200	-1.721E-02	-3.412E-02	4.498E-02 (1.8E-01)	8.918E-02 (3.6E-01)
46	2.250	2.744E-02	5.690E-02	4.137E-02 (1.8E-01)	8.583E-02 (3.7E-01)
47	2.300	2.255E-02	4.887E-02	-3.085E-03 (1.8E-01)	-6.685E-03 (3.9E-01)
48	2.350	-3.281E-02	-7.493E-02	-7.322E-02 (1.7E-01)	-1.656E-01 (3.9E-01)
49	2.400	-9.817E-02	-2.316E-01	-1.268E-01 (1.7E-01)	-2.993E-01 (3.9E-01)
50	2.450	-1.080E-01	-2.655E-01	-1.108E-01 (1.6E-01)	-2.724E-01 (4.1E-01)
51	2.500	-1.329E-03	-3.402E-03	1.875E-02 (1.6E-01)	4.802E-02 (4.2E-01)
52	2.550	2.493E-01	6.640E-01	2.774E-01 (1.6E-01)	7.388E-01 (4.3E-01)
53	2.600	6.237E-01	1.797E+00	6.434E-01 (1.5E-01)	1.782E+00 (4.2E-01)
54	2.650	1.060E+00	3.051E+00	1.053E+00 (1.5E-01)	3.058E+00 (4.4E-01)
55	2.700	1.479E+00	4.416E+00	1.467E+00 (1.5E-01)	4.381E+00 (4.5E-01)
56	2.750	1.807E+00	5.509E+00	1.791E+00 (1.5E-01)	5.549E+00 (4.6E-01)
57	2.800	2.004E+00	6.438E+00	1.996E+00 (1.4E-01)	6.410E+00 (4.6E-01)
58	2.850	2.067E+00	6.878E+00	2.071E+00 (1.4E-01)	6.891E+00 (4.7E-01)
59	2.900	2.021E+00	6.963E+00	2.035E+00 (1.4E-01)	7.011E+00 (4.9E-01)
60	2.950	1.907E+00	6.709E+00	1.922E+00 (1.4E-01)	6.853E+00 (4.9E-01)
61	3.000	1.762E+00	6.407E+00	1.771E+00 (1.3E-01)	6.528E+00 (4.9E-01)
62	3.050	1.612E+00	6.144E+00	1.610E+00 (1.3E-01)	6.136E+00 (5.0E-01)
63	3.100	1.470E+00	5.798E+00	1.450E+00 (1.3E-01)	5.748E+00 (5.2E-01)
64	3.150	1.341E+00	5.452E+00	1.330E+00 (1.3E-01)	5.408E+00 (5.2E-01)
65	3.200	1.230E+00	5.160E+00	1.224E+00 (1.3E-01)	5.137E+00 (5.2E-01)
66	3.250	1.142E+00	4.940E+00	1.144E+00 (1.2E-01)	4.951E+00 (5.4E-01)
67	3.300	1.082E+00	4.897E+00	1.090E+00 (1.2E-01)	4.863E+00 (5.5E-01)
68	3.350	1.053E+00	4.841E+00	1.051E+00 (1.2E-01)	4.876E+00 (5.5E-01)

H_2O at 75°C

	R	G1(R)	D1(R)	G2(R)	D2(R)
69	3.400	1.049E+00	4.947E+00	1.051E+00 (1.2E-01)	4.977E+00 (5.6E-01)
70	3.450	1.059E+00	5.182E+00	1.053E+00 (1.2E-01)	5.137E+00 (5.7E-01)
71	3.500	1.068E+00	5.340E+00	1.058E+00 (1.2E-01)	5.312E+00 (5.8E-01)
72	3.550	1.057E+00	5.509E+00	1.058E+00 (1.1E-01)	5.461E+00 (5.9E-01)
73	3.600	1.052E+00	5.586E+00	1.048E+00 (1.1E-01)	5.562E+00 (5.9E-01)
74	3.650	1.027E+00	5.606E+00	1.029E+00 (1.1E-01)	5.614E+00 (6.1E-01)
75	3.700	1.001E+00	5.612E+00	1.006E+00 (1.1E-01)	5.640E+00 (6.2E-01)
76	3.750	9.804E-01	5.648E+00	9.847E-01 (1.1E-01)	5.673E+00 (6.2E-01)
77	3.800	9.702E-01	5.739E+00	9.701E-01 (1.1E-01)	5.739E+00 (6.2E-01)
78	3.850	9.691E-01	5.844E+00	9.640E-01 (1.1E-01)	5.854E+00 (6.4E-01)
79	3.900	9.730E-01	6.043E+00	9.653E-01 (1.1E-01)	6.015E+00 (6.6E-01)
80	3.950	9.779E-01	6.251E+00	9.715E-01 (1.0E-01)	6.210E+00 (6.5E-01)
81	4.000	9.819E-01	6.436E+00	9.798E-01 (1.0E-01)	6.422E+00 (6.6E-01)
82	4.050	9.853E-01	6.631E+00	9.880E-01 (1.0E-01)	6.639E+00 (6.8E-01)
83	4.100	9.895E-01	6.814E+00	9.947E-01 (1.0E-01)	6.850E+00 (6.9E-01)
84	4.150	9.949E-01	7.019E+00	9.991E-01 (9.7E-02)	7.049E+00 (6.9E-01)
85	4.200	1.000E+00	7.208E+00	1.001E+00 (9.5E-02)	7.233E+00 (6.9E-01)
86	4.250	1.003E+00	7.424E+00	1.000E+00 (9.3E-02)	7.402E+00 (7.1E-01)
87	4.300	1.003E+00	7.597E+00	9.984E-01 (9.5E-02)	7.563E+00 (7.2E-01)
88	4.350	1.000E+00	7.754E+00	9.973E-01 (9.4E-02)	7.731E+00 (7.3E-01)
89	4.400	9.986E-01	7.920E+00	9.992E-01 (9.2E-02)	7.925E+00 (7.3E-01)
90	4.450	1.002E+00	8.125E+00	1.006E+00 (9.2E-02)	8.159E+00 (7.4E-01)
91	4.500	1.011E+00	8.386E+00	1.017E+00 (9.2E-02)	8.435E+00 (7.6E-01)
92	4.550	1.025E+00	8.654E+00	1.030E+00 (8.9E-02)	8.734E+00 (7.9E-01)
93	4.600	1.039E+00	9.010E+00	1.041E+00 (8.8E-02)	9.024E+00 (7.6E-01)
94	4.650	1.048E+00	9.283E+00	1.047E+00 (8.7E-02)	9.271E+00 (7.7E-01)
95	4.700	1.047E+00	9.476E+00	1.045E+00 (8.6E-02)	9.453E+00 (7.8E-01)
96	4.750	1.037E+00	9.585E+00	1.036E+00 (8.5E-02)	9.573E+00 (7.9E-01)
97	4.800	1.021E+00	9.641E+00	1.023E+00 (8.4E-02)	9.656E+00 (8.0E-01)
98	4.850	1.006E+00	9.697E+00	1.010E+00 (8.4E-02)	9.737E+00 (8.0E-01)
99	4.900	9.960E-01	9.797E+00	1.001E+00 (8.2E-02)	9.846E+00 (8.1E-01)
100	4.950	9.918E-01	9.956E+00	9.954E-01 (8.1E-02)	9.991E+00 (8.1E-01)
101	5.000	9.915E-01	1.015E+01	9.922E-01 (8.1E-02)	1.016E+01 (8.3E-01)
102	5.050	9.910E-01	1.035E+01	9.892E-01 (8.1E-02)	1.033E+01 (8.5E-01)
103	5.100	9.870E-01	1.052E+01	9.842E-01 (7.9E-02)	1.049E+01 (8.5E-01)
104	5.150	9.786E-01	1.063E+01	9.770E-01 (7.8E-02)	1.062E+01 (8.4E-01)
105	5.200	9.682E-01	1.072E+01	9.688E-01 (7.8E-02)	1.073E+01 (8.6E-01)
106	5.250	9.590E-01	1.083E+01	9.614E-01 (7.6E-02)	1.086E+01 (8.8E-01)
107	5.300	9.533E-01	1.097E+01	9.560E-01 (7.6E-02)	1.100E+01 (8.8E-01)
108	5.350	9.514E-01	1.116E+01	9.525E-01 (7.5E-02)	1.117E+01 (8.6E-01)
109	5.400	9.507E-01	1.136E+01	9.494E-01 (7.5E-02)	1.134E+01 (9.0E-01)
110	5.450	9.483E-01	1.154E+01	9.451E-01 (7.4E-02)	1.150E+01 (9.0E-01)
111	5.500	9.427E-01	1.168E+01	9.391E-01 (7.4E-02)	1.164E+01 (9.2E-01)
112	5.550	9.349E-01	1.180E+01	9.324E-01 (7.3E-02)	1.177E+01 (9.2E-01)
113	5.600	9.280E-01	1.192E+01	9.276E-01 (7.2E-02)	1.192E+01 (9.2E-01)
114	5.650	9.257E-01	1.211E+01	9.267E-01 (7.3E-02)	1.212E+01 (9.5E-01)
115	5.700	9.297E-01	1.237E+01	9.308E-01 (7.1E-02)	1.239E+01 (9.5E-01)
116	5.750	9.389E-01	1.272E+01	9.357E-01 (7.0E-02)	1.271E+01 (9.4E-01)
117	5.800	9.496E-01	1.309E+01	9.474E-01 (7.0E-02)	1.306E+01 (9.6E-01)
118	5.850	9.577E-01	1.343E+01	9.542E-01 (7.0E-02)	1.338E+01 (9.8E-01)
119	5.900	9.609E-01	1.370E+01	9.574E-01 (6.8E-02)	1.365E+01 (9.7E-01)
120	5.950	9.597E-01	1.392E+01	9.577E-01 (6.8E-02)	1.389E+01 (9.9E-01)
121	6.000	9.573E-01	1.412E+01	9.574E-01 (6.8E-02)	1.412E+01 (1.0E+00)
122	6.050	9.579E-01	1.436E+01	9.593E-01 (6.6E-02)	1.438E+01 (1.0E+00)
123	6.100	9.635E-01	1.449E+01	9.649E-01 (6.7E-02)	1.471E+01 (1.0E+00)
124	6.150	9.739E-01	1.509E+01	9.741E-01 (6.6E-02)	1.509E+01 (1.0E+00)
125	6.200	9.861E-01	1.553E+01	9.847E-01 (6.5E-02)	1.551E+01 (1.0E+00)
126	6.250	9.966E-01	1.595E+01	9.943E-01 (6.5E-02)	1.591E+01 (1.0E+00)
127	6.300	1.003E+00	1.631E+01	1.001E+00 (6.5E-02)	1.628E+01 (1.1E+00)
128	6.350	1.005E+00	1.651E+01	1.005E+00 (6.3E-02)	1.650E+01 (1.0E+00)
129	6.400	1.006E+00	1.689E+01	1.008E+00 (6.3E-02)	1.692E+01 (1.1E+00)
130	6.450	1.009E+00	1.719E+01	1.012E+00 (6.3E-02)	1.724E+01 (1.1E+00)
131	6.500	1.014E+00	1.755E+01	1.017E+00 (6.2E-02)	1.760E+01 (1.1E+00)
132	6.550	1.022E+00	1.796E+01	1.023E+00 (6.1E-02)	1.798E+01 (1.1E+00)
133	6.600	1.029E+00	1.837E+01	1.029E+00 (6.1E-02)	1.836E+01 (1.1E+00)
134	6.650	1.034E+00	1.873E+01	1.033E+00 (6.2E-02)	1.871E+01 (1.1E+00)
135	6.700	1.034E+00	1.902E+01	1.034E+00 (6.0E-02)	1.901E+01 (1.1E+00)
136	6.750	1.032E+00	1.926E+01	1.033E+00 (6.0E-02)	1.928E+01 (1.1E+00)
137	6.800	1.030E+00	1.950E+01	1.032E+00 (6.0E-02)	1.955E+01 (1.1E+00)

H_2O at 75°C

	R	G1(R)	D1(R)	G2(R)		D2(R)	
138	6.850	1.030E+00	1.979E+01	1.033E+00	(5.9E-02)	1.985E+01	(1.1E+00)
139	6.900	1.033E+00	2.015E+01	1.036E+00	(5.8E-02)	2.021E+01	(1.1E+00)
140	6.950	1.039E+00	2.057E+01	1.041E+00	(5.8E-02)	2.059E+01	(1.1E+00)
141	7.000	1.044E+00	2.096E+01	1.044E+00	(5.8E-02)	2.096E+01	(1.2E+00)
142	7.050	1.046E+00	2.129E+01	1.044E+00	(5.8E-02)	2.127E+01	(1.2E+00)
143	7.100	1.042E+00	2.151E+01	1.041E+00	(5.7E-02)	2.150E+01	(1.2E+00)
144	7.150	1.034E+00	2.168E+01	1.035E+00	(5.6E-02)	2.167E+01	(1.2E+00)
145	7.200	1.027E+00	2.181E+01	1.029E+00	(5.7E-02)	2.184E+01	(1.2E+00)
146	7.250	1.023E+00	2.202E+01	1.025E+00	(5.6E-02)	2.207E+01	(1.2E+00)
147	7.300	1.023E+00	2.234E+01	1.025E+00	(5.5E-02)	2.237E+01	(1.2E+00)
148	7.350	1.027E+00	2.273E+01	1.027E+00	(5.5E-02)	2.273E+01	(1.2E+00)
149	7.400	1.031E+00	2.313E+01	1.030E+00	(5.5E-02)	2.310E+01	(1.2E+00)
150	7.450	1.032E+00	2.345E+01	1.029E+00	(5.5E-02)	2.341E+01	(1.2E+00)
151	7.500	1.026E+00	2.365E+01	1.025E+00	(5.4E-02)	2.361E+01	(1.2E+00)
152	7.550	1.017E+00	2.374E+01	1.018E+00	(5.4E-02)	2.373E+01	(1.3E+00)
153	7.600	1.005E+00	2.379E+01	1.006E+00	(5.3E-02)	2.379E+01	(1.3E+00)
154	7.650	9.956E-01	2.387E+01	9.962E-01	(5.3E-02)	2.388E+01	(1.3E+00)
155	7.700	9.899E-01	2.404E+01	9.900E-01	(5.2E-02)	2.405E+01	(1.3E+00)
156	7.750	9.884E-01	2.432E+01	9.872E-01	(5.2E-02)	2.429E+01	(1.3E+00)
157	7.800	9.890E-01	2.465E+01	9.867E-01	(5.3E-02)	2.459E+01	(1.3E+00)
158	7.850	9.892E-01	2.497E+01	9.857E-01	(5.1E-02)	2.491E+01	(1.3E+00)
159	7.900	9.875E-01	2.525E+01	9.856E-01	(5.2E-02)	2.520E+01	(1.3E+00)
160	7.950	9.842E-01	2.548E+01	9.834E-01	(5.0E-02)	2.546E+01	(1.3E+00)
161	8.000	9.808E-01	2.571E+01	9.810E-01	(5.2E-02)	2.572E+01	(1.4E+00)
162	8.050	9.791E-01	2.599E+01	9.797E-01	(5.0E-02)	2.601E+01	(1.3E+00)
163	8.100	9.801E-01	2.634E+01	9.801E-01	(5.0E-02)	2.634E+01	(1.3E+00)
164	8.150	9.827E-01	2.674E+01	9.817E-01	(4.9E-02)	2.671E+01	(1.3E+00)
165	8.200	9.851E-01	2.713E+01	9.834E-01	(5.0E-02)	2.709E+01	(1.4E+00)
166	8.250	9.854E-01	2.748E+01	9.838E-01	(5.0E-02)	2.743E+01	(1.4E+00)
167	8.300	9.834E-01	2.775E+01	9.826E-01	(4.8E-02)	2.773E+01	(1.4E+00)
168	8.350	9.804E-01	2.800E+01	9.808E-01	(4.9E-02)	2.801E+01	(1.4E+00)
169	8.400	9.789E-01	2.830E+01	9.803E-01	(4.7E-02)	2.834E+01	(1.4E+00)
170	8.450	9.809E-01	2.869E+01	9.824E-01	(4.9E-02)	2.874E+01	(1.4E+00)
171	8.500	9.865E-01	2.920E+01	9.875E-01	(4.7E-02)	2.923E+01	(1.4E+00)
172	8.550	9.939E-01	2.976E+01	9.939E-01	(4.7E-02)	2.977E+01	(1.4E+00)
173	8.600	9.998E-01	3.029E+01	9.992E-01	(4.7E-02)	3.028E+01	(1.4E+00)
174	8.650	1.002E+00	3.070E+01	1.001E+00	(4.7E-02)	3.069E+01	(1.4E+00)
175	8.700	9.986E-01	3.097E+01	9.991E-01	(4.7E-02)	3.098E+01	(1.5E+00)
176	8.750	9.926E-01	3.113E+01	9.942E-01	(4.5E-02)	3.118E+01	(1.4E+00)
177	8.800	9.871E-01	3.132E+01	9.894E-01	(4.7E-02)	3.139E+01	(1.5E+00)
178	8.850	9.855E-01	3.162E+01	9.877E-01	(4.4E-02)	3.169E+01	(1.4E+00)
179	8.900	9.892E-01	3.210E+01	9.906E-01	(4.7E-02)	3.214E+01	(1.5E+00)
180	8.950	9.971E-01	3.272E+01	9.974E-01	(4.4E-02)	3.273E+01	(1.4E+00)
181	9.000	1.006E+00	3.338E+01	1.005E+00	(4.6E-02)	3.336E+01	(1.5E+00)
182	9.050	1.012E+00	3.395E+01	1.012E+00	(4.4E-02)	3.394E+01	(1.5E+00)
183	9.100	1.013E+00	3.436E+01	1.013E+00	(4.5E-02)	3.438E+01	(1.5E+00)
184	9.150	1.009E+00	3.461E+01	1.011E+00	(4.5E-02)	3.466E+01	(1.5E+00)
185	9.200	1.003E+00	3.479E+01	1.005E+00	(4.4E-02)	3.486E+01	(1.5E+00)
186	9.250	9.988E-01	3.501E+01	1.001E+00	(4.4E-02)	3.507E+01	(1.5E+00)
187	9.300	9.981E-01	3.536E+01	9.987E-01	(4.3E-02)	3.539E+01	(1.5E+00)
188	9.350	1.002E+00	3.587E+01	1.001E+00	(4.4E-02)	3.585E+01	(1.6E+00)
189	9.400	1.007E+00	3.646E+01	1.006E+00	(4.3E-02)	3.641E+01	(1.5E+00)
190	9.450	1.012E+00	3.704E+01	1.011E+00	(4.4E-02)	3.698E+01	(1.6E+00)
191	9.500	1.014E+00	3.750E+01	1.014E+00	(4.2E-02)	3.747E+01	(1.6E+00)
192	9.550	1.012E+00	3.782E+01	1.013E+00	(4.3E-02)	3.783E+01	(1.6E+00)
193	9.600	1.007E+00	3.803E+01	1.008E+00	(4.2E-02)	3.807E+01	(1.6E+00)
194	9.650	1.002E+00	3.823E+01	1.003E+00	(4.2E-02)	3.826E+01	(1.6E+00)
195	9.700	9.985E-01	3.849E+01	9.991E-01	(4.1E-02)	3.847E+01	(1.6E+00)
196	9.750	9.977E-01	3.885E+01	9.959E-01	(4.2E-02)	3.878E+01	(1.6E+00)
197	9.800	9.989E-01	3.930E+01	9.962E-01	(4.0E-02)	3.920E+01	(1.6E+00)
198	9.850	1.001E+00	3.978E+01	9.982E-01	(4.2E-02)	3.968E+01	(1.7E+00)
199	9.900	1.002E+00	4.021E+01	1.000E+00	(4.0E-02)	4.016E+01	(1.6E+00)
200	9.950	1.001E+00	4.058E+01	1.001E+00	(4.1E-02)	4.059E+01	(1.7E+00)
201	10.000	9.982E-01	4.089E+01	1.000E+00	(4.0E-02)	4.097E+01	(1.6E+00)

INTEGRAL(G(R)-1) = -2.228486E+00

(G(R)-1)*R**2 = -2.728923E+00

H_2O at 75°C

	S	SI(S) 1	SI(S) 2	ERROR	DELTA SI(S)
2	.077	-.050709	-.100715	.000017	.050007
3	.154	-.100896	-.200169	.000074	.099273
4	.231	-.150408	-.297411	.000180	.147004
5	.309	-.199079	-.391414	.000345	.192335
6	.386	-.246735	-.481104	.000581	.234369
7	.463	-.293184	-.565448	.000898	.272264
8	.540	-.338218	-.643535	.001310	.305317
9	.617	-.381604	-.714638	.001832	.333034
10	.694	-.423083	-.778209	.002480	.355126
11	.771	-.462556	-.834127	.003286	.371471
12	.848	-.499345	-.881382	.004246	.382037
13	.925	-.533044	-.919872	.005391	.386828
14	1.002	-.563321	-.949190	.006747	.385869
15	1.079	-.589687	-.968923	.008342	.379236
16	1.156	-.611584	-.978699	.010207	.367115
17	1.233	-.628371	-.978229	.000731	.349858
18	1.310	-.639107	-.967105	.000346	.327998
19	1.387	-.625495	-.927722	.000435	.302227
20	1.464	-.598474	-.871800	.000542	.273326
21	1.541	-.530975	-.773060	.000700	.242085
22	1.618	-.465334	-.674568	.000857	.209235
23	1.695	-.318132	-.493542	.001114	.175411
24	1.771	-.162651	-.303808	.001384	.141158
25	1.848	.029266	-.077699	.001700	.106965
26	1.925	.165036	.091714	.001950	.073322
27	2.002	.323540	.282784	.002230	.040756
28	2.078	.422270	.412418	.002440	.009852
29	2.155	.471151	.489931	.002592	-.018779
30	2.231	.513765	.558343	.002738	-.044578
31	2.308	.526700	.593845	.002851	-.067145
32	2.384	.439972	.526315	.002845	-.086342
33	2.461	.409070	.511424	.002909	-.102354
34	2.537	.373856	.489508	.002970	-.115652
35	2.614	.426349	.553218	.003141	-.126870
36	2.690	.405616	.542220	.003226	-.136604
37	2.766	.398441	.543656	.003328	-.145215
38	2.842	.363890	.516591	.003401	-.152701
39	2.918	.315153	.473882	.003459	-.158730
40	2.994	.213435	.376255	.003455	-.162820
41	3.070	.024422	.189049	.004808	-.164628
42	3.222	-.331925	-.169653	.004573	-.162272
43	3.374	-.589474	-.430971	.004488	-.150504
44	3.525	-.760135	-.597082	.004591	-.163053
45	3.676	-.786545	-.607553	.005004	-.178992
46	3.827	-.725670	-.524164	.005535	-.201507
47	3.978	-.545184	-.319746	.006343	-.226437
48	4.128	-.410613	-.155178	.007207	-.255435
49	4.278	-.246715	.043810	.008077	-.290525
50	4.427	-.076610	.251262	.009012	-.327872
51	4.576	.013780	.374848	.009843	-.361068
52	4.725	.016774	.404892	.010551	-.388118
53	4.874	-.014715	.396078	.011208	-.410792
54	5.022	-.090461	.332079	.011836	-.428540
55	5.170	-.182179	.255799	.012496	-.437978
56	5.317	-.377361	.061316	.012967	-.438676
57	5.464	-.579259	-.144198	.013472	-.435061
58	5.610	-.622633	-.191339	.014319	-.431294
59	5.757	-.768680	-.340730	.014968	-.427950
60	5.902	-.800656	-.374945	.015882	-.425711
61	6.047	-.644668	-.215681	.017193	-.428987
62	6.192	-.606464	-.163670	.018278	-.442794
63	6.337	-.396569	.071425	.019665	-.467994
64	6.480	-.520599	-.017952	.020421	-.502647
65	6.624	-.584474	-.037780	.021298	-.546694
66	6.766	-.534194	.067611	.022354	-.601806
67	6.909	-.610900	.055897	.024907	-.666797
68	7.051	-.558995	.177554	.025978	-.736549
69	7.192	-.551118	.255273	.026945	-.806391

H_2O at 100°C

	S	SI(S) 1	SI(S) 2	ERROR	DELTA SI(S)
70	7.332	-.675059	.199796	.027687	-.874854
71	7.473	-.770969	.169723	.028412	-.940693
72	7.612	-.889030	.110591	.029040	-.999621
73	7.751	-1.017711	.028789	.029547	-1.046500
74	7.890	-1.208651	-.129039	.029878	-1.079612
75	8.027	-1.281938	-.181612	.030436	-1.100325
76	8.164	-1.314018	-.205051	.031031	-1.108967
77	8.301	-1.263512	-.159882	.031689	-1.103629
78	8.437	-1.253161	-.169470	.032271	-1.083691
79	8.572	-1.181356	-.129070	.032969	-1.052285
80	8.707	-1.075876	-.062179	.033712	-1.013697
81	8.841	-.955454	.014163	.034417	-.969517
82	8.974	-.802266	.117521	.035220	-.919786
83	9.107	-.736179	.129516	.035768	-.865695
84	9.239	-.644012	.167423	.036358	-.811436
85	9.370	-.655483	.104841	.036615	-.760324
86	9.500	-.677432	.034837	.036860	-.712269
87	9.630	-.569072	.096607	.037453	-.665680
88	9.759	-.553708	.067263	.037778	-.620971
89	9.887	-.583070	-.002494	.037976	-.580576
90	10.015	-.563292	-.017705	.038310	-.545587
91	10.142	-.565572	-.051598	.038582	-.513974
92	10.268	-.525808	-.042857	.038958	-.482951
93	10.393	-.522558	-.070367	.039261	-.452191
94	10.517	-.505581	-.082035	.039622	-.423546
95	10.641	-.505861	-.108038	.039956	-.397823
96	10.764	-.423158	-.050034	.040624	-.373124
97	10.886	-.368515	-.021644	.041162	-.346972
98	11.007	-.359997	-.040659	.041525	-.319338
99	11.127	-.281516	.011082	.042149	-.292597
100	11.247	-.229544	.038980	.042802	-.268525
101	11.366	-.244709	.001510	.043115	-.246219
102	11.483	-.236487	-.012979	.043498	-.223508
103	11.600	-.140111	.059839	.044134	-.199949
104	11.716	-.143812	.033843	.044438	-.177655
105	11.831	-.052815	.106131	.044966	-.158946
106	11.946	-.068143	.075563	.045216	-.143707
107	12.059	-.076288	.053270	.045491	-.129558
108	12.171	-.038023	.076553	.045914	-.114576
109	12.283	-.107170	-.007800	.046060	-.099370
110	12.393	-.085679	.000496	.046421	-.086176
111	12.503	-.095441	-.019385	.046664	-.076057
112	12.611	-.092494	-.025131	.046929	-.067363
113	12.719	-.128910	-.071776	.047052	-.057134
114	12.826	-.075427	-.031496	.047408	-.043931
115	12.932	-.094638	-.065502	.047563	-.029136
116	13.036	-.059589	-.044195	.047884	-.015394
117	13.140	-.028050	-.024244	.048189	-.003806
118	13.243	-.046563	-.053900	.048334	.007338
119	13.345	-.030664	-.051730	.048647	.021066
120	13.445	-.023766	-.062664	.048831	.038899
121	13.545	.036254	-.023018	.049150	.059272
122	13.644	.028730	-.049853	.049235	.078584
123	13.838	.177379	.072454	.049801	.104925
124	14.028	.191284	.067864	.049905	.123420
125	14.214	.198398	.053850	.049926	.144548
126	14.395	.203294	.049322	.049867	.153972
127	14.572	.217320	.070490	.049841	.146831
128	14.744	.111092	-.025879	.049465	.136971
129	14.913	.156852	.033812	.049533	.123041
130	15.076	.053176	-.040684	.049121	.093860
131	15.235	-.036083	-.094739	.048728	.058655
132	15.389	-.021178	-.055516	.048620	.034339
133	15.539	-.043822	-.059065	.048329	.015243
134	15.684	-.057608	-.041291	.048023	-.016317
135	15.824	-.162732	-.104587	.047434	-.058145
136	15.959	-.190174	-.102708	.047064	-.087466

INTEGRAL(SI(S)*S) = -1.249221E+00

H_2O at 100°C

OBSERVED RADIAL DISTRIBUTION FUNCTIONS (RDF2 = 0 FROM R= 0 TO R= 2.30)

	R	G1(R)	D1(R)	G2(R)		D2(R)	
1	0	1.000E+00	0	1.000E+00	(0)	0	(0)
2	.050	-5.559E+01	-5.597E-02	-8.742E-01	(7.0E+00)	-8.802E-04	(7.1E-03)
3	.100	-5.096E+01	-2.052E-01	-6.096E-01	(5.7E+00)	-2.455E-03	(2.3E-02)
4	.150	-4.379E+01	-3.968E-01	-2.752E-01	(4.0E+00)	-2.494E-03	(3.6E-02)
5	.200	-3.481E+01	-5.608E-01	1.744E-02	(2.1E+00)	2.810E-04	(3.4E-02)
6	.250	-2.495E+01	-6.282E-01	1.850E-01	(1.4E+00)	4.658E-03	(3.6E-02)
7	.300	-1.520E+01	-5.510E-01	2.035E-01	(1.4E+00)	7.377E-03	(5.2E-02)
8	.350	-6.478E+00	-3.196E-01	1.106E-01	(1.4E+00)	5.458E-03	(6.7E-02)
9	.400	4.749E-01	3.060E-02	-1.863E-02	(1.0E+00)	-1.200E-03	(6.7E-02)
10	.450	5.209E+00	4.248E-01	-1.101E-01	(8.7E-01)	-8.982E-03	(7.1E-02)
11	.500	7.625E+00	7.678E-01	-1.239E-01	(8.7E-01)	-1.247E-02	(8.8E-02)
12	.550	7.973E+00	9.714E-01	-6.670E-02	(8.4E-01)	-8.126E-03	(1.0E-01)
13	.600	6.778E+00	9.828E-01	1.884E-02	(7.1E-01)	2.732E-03	(1.0E-01)
14	.650	4.721E+00	8.033E-01	8.175E-02	(6.3E-01)	1.391E-02	(1.1E-01)
15	.700	2.481E+00	4.897E-01	9.036E-02	(6.2E-01)	1.783E-02	(1.2E-01)
16	.750	6.036E-01	1.367E-01	4.665E-02	(6.0E-01)	1.057E-02	(1.4E-01)
17	.800	-6.003E-01	-1.547E-01	-1.883E-02	(5.3E-01)	-4.853E-03	(1.4E-01)
18	.850	-1.072E+00	-3.119E-01	-6.678E-02	(4.9E-01)	-1.943E-02	(1.4E-01)
19	.900	-9.583E-01	-3.126E-01	-7.163E-02	(4.9E-01)	-2.337E-02	(1.6E-01)
20	.950	-5.146E-01	-1.870E-01	-3.443E-02	(4.7E-01)	-1.251E-02	(1.7E-01)
21	1.000	3.960E-03	1.595E-03	2.005E-02	(4.2E-01)	8.073E-03	(1.7E-01)
22	1.050	4.250E-01	1.887E-01	5.912E-02	(4.0E-01)	2.625E-02	(1.8E-01)
23	1.100	6.904E-01	3.365E-01	6.129E-02	(4.0E-01)	2.987E-02	(1.9E-01)
24	1.150	8.352E-01	4.449E-01	2.763E-02	(3.9E-01)	1.472E-02	(2.1E-01)
25	1.200	9.325E-01	5.408E-01	-2.021E-02	(3.5E-01)	-1.172E-02	(2.1E-01)
26	1.250	1.035E+00	6.513E-01	-5.357E-02	(3.4E-01)	-3.371E-02	(2.1E-01)
27	1.300	1.142E+00	7.771E-01	-5.363E-02	(3.4E-01)	-3.650E-02	(2.3E-01)
28	1.350	1.202E+00	8.825E-01	-2.178E-02	(3.3E-01)	-1.599E-02	(2.4E-01)
29	1.400	1.151E+00	9.089E-01	2.204E-02	(3.0E-01)	1.740E-02	(2.4E-01)
30	1.450	9.536E-01	8.075E-01	5.155E-02	(2.9E-01)	4.365E-02	(2.5E-01)
31	1.500	6.316E-01	5.724E-01	4.965E-02	(2.9E-01)	4.499E-02	(2.7E-01)
32	1.550	2.647E-01	2.561E-01	1.808E-02	(2.9E-01)	1.749E-02	(2.8E-01)
33	1.600	-4.314E-02	-4.448E-02	-2.395E-02	(2.7E-01)	-2.470E-02	(2.8E-01)
34	1.650	-2.080E-01	-2.291E-01	-5.131E-02	(2.6E-01)	-5.626E-02	(2.8E-01)
35	1.700	-2.022E-01	-2.353E-01	-4.769E-02	(2.6E-01)	-5.551E-02	(3.0E-01)
36	1.750	-6.281E-02	-7.748E-02	-1.518E-02	(2.5E-01)	-1.872E-02	(3.1E-01)
37	1.800	1.289E-01	1.682E-01	2.697E-02	(2.4E-01)	3.520E-02	(3.1E-01)
38	1.850	2.878E-01	3.957E-01	5.349E-02	(2.3E-01)	7.374E-02	(3.2E-01)
39	1.900	3.625E-01	5.270E-01	4.782E-02	(2.3E-01)	6.953E-02	(3.4E-01)
40	1.950	3.537E-01	5.417E-01	1.201E-02	(2.3E-01)	1.840E-02	(3.5E-01)
41	2.000	3.046E-01	4.907E-01	-3.387E-02	(2.1E-01)	-5.457E-02	(3.4E-01)
42	2.050	2.712E-01	4.591E-01	-6.267E-02	(2.1E-01)	-1.061E-01	(3.6E-01)
43	2.100	2.892E-01	5.136E-01	-5.524E-02	(2.1E-01)	-9.812E-02	(3.7E-01)
44	2.150	3.542E-01	6.593E-01	-1.133E-02	(2.0E-01)	-2.110E-02	(3.8E-01)
45	2.200	4.267E-01	8.318E-01	5.011E-02	(1.9E-01)	9.769E-02	(3.8E-01)
46	2.250	4.565E-01	9.307E-01	1.018E-01	(1.9E-01)	2.075E-01	(3.9E-01)
47	2.300	4.133E-01	8.806E-01	1.242E-01	(1.9E-01)	2.645E-01	(4.1E-01)
48	2.350	3.079E-01	6.849E-01	1.190E-01	(1.9E-01)	2.648E-01	(4.1E-01)
49	2.400	1.914E-01	4.440E-01	1.119E-01	(1.8E-01)	2.597E-01	(4.1E-01)
50	2.450	1.335E-01	3.228E-01	1.425E-01	(1.8E-01)	3.446E-01	(4.2E-01)
51	2.500	1.914E-01	4.817E-01	2.469E-01	(1.7E-01)	6.214E-01	(4.4E-01)
52	2.550	3.828E-01	1.003E+00	4.398E-01	(1.7E-01)	1.152E+00	(4.5E-01)
53	2.600	6.785E-01	1.847E+00	7.062E-01	(1.5E-01)	1.923E+00	(4.5E-01)
54	2.650	1.014E+00	2.858E+00	1.005E+00	(1.6E-01)	2.844E+00	(4.6E-01)
55	2.700	1.316E+00	3.865E+00	1.285E+00	(1.6E-01)	3.774E+00	(4.8E-01)
56	2.750	1.532E+00	4.666E+00	1.501E+00	(1.6E-01)	4.573E+00	(4.8E-01)
57	2.800	1.643E+00	5.186E+00	1.630E+00	(1.5E-01)	5.148E+00	(4.8E-01)
58	2.850	1.664E+00	5.443E+00	1.675E+00	(1.5E-01)	5.479E+00	(4.9E-01)
59	2.900	1.632E+00	5.526E+00	1.657E+00	(1.5E-01)	5.611E+00	(5.1E-01)
60	2.950	1.581E+00	5.540E+00	1.604E+00	(1.5E-01)	5.622E+00	(5.1E-01)
61	3.000	1.532E+00	5.552E+00	1.541E+00	(1.4E-01)	5.585E+00	(5.2E-01)
62	3.050	1.486E+00	5.568E+00	1.478E+00	(1.4E-01)	5.538E+00	(5.3E-01)
63	3.100	1.434E+00	5.552E+00	1.416E+00	(1.4E-01)	5.482E+00	(5.4E-01)
64	3.150	1.367E+00	5.465E+00	1.351E+00	(1.4E-01)	5.399E+00	(5.5E-01)
65	3.200	1.285E+00	5.300E+00	1.280E+00	(1.3E-01)	5.278E+00	(5.5E-01)
66	3.250	1.199E+00	5.099E+00	1.206E+00	(1.3E-01)	5.132E+00	(5.6E-01)
67	3.300	1.125E+00	4.933E+00	1.139E+00	(1.3E-01)	4.997E+00	(5.8E-01)
68	3.350	1.076E+00	4.864E+00	1.088E+00	(1.3E-01)	4.918E+00	(5.8E-01)

H_2O at 100°C

	R	G1(R)	D1(R)	G2(R)		D2(R)	
69	3.400	1.055E+00	4.914E+00	1.058E+00	(1.3E-01)	4.924E+00	(5.8E-01)
70	3.450	1.054E+00	5.051E+00	1.045E+00	(1.2E-01)	5.010E+00	(6.0E-01)
71	3.500	1.056E+00	5.210E+00	1.042E+00	(1.2E-01)	5.141E+00	(6.1E-01)
72	3.550	1.050E+00	5.328E+00	1.038E+00	(1.2E-01)	5.270E+00	(6.1E-01)
73	3.600	1.029E+00	5.372E+00	1.026E+00	(1.2E-01)	5.355E+00	(6.2E-01)
74	3.650	9.981E-01	5.356E+00	1.004E+00	(1.2E-01)	5.385E+00	(6.4E-01)
75	3.700	9.657E-01	5.325E+00	9.752E-01	(1.2E-01)	5.377E+00	(6.5E-01)
76	3.750	9.410E-01	5.329E+00	9.477E-01	(1.1E-01)	5.368E+00	(6.5E-01)
77	3.800	9.281E-01	5.398E+00	9.276E-01	(1.1E-01)	5.395E+00	(6.5E-01)
78	3.850	9.260E-01	5.528E+00	9.182E-01	(1.1E-01)	5.482E+00	(6.7E-01)
79	3.900	9.302E-01	5.699E+00	9.195E-01	(1.1E-01)	5.633E+00	(6.9E-01)
80	3.950	9.369E-01	5.888E+00	9.291E-01	(1.1E-01)	5.838E+00	(6.9E-01)
81	4.000	9.454E-01	6.092E+00	9.443E-01	(1.1E-01)	6.085E+00	(6.9E-01)
82	4.050	9.580E-01	6.328E+00	9.634E-01	(1.1E-01)	6.364E+00	(7.1E-01)
83	4.100	9.773E-01	6.617E+00	9.853E-01	(1.1E-01)	6.671E+00	(7.2E-01)
84	4.150	1.004E+00	6.961E+00	1.009E+00	(1.0E-01)	6.999E+00	(7.2E-01)
85	4.200	1.033E+00	7.338E+00	1.033E+00	(1.0E-01)	7.336E+00	(7.2E-01)
86	4.250	1.058E+00	7.699E+00	1.053E+00	(1.0E-01)	7.658E+00	(7.4E-01)
87	4.300	1.073E+00	7.992E+00	1.066E+00	(1.0E-01)	7.938E+00	(7.6E-01)
88	4.350	1.074E+00	8.187E+00	1.070E+00	(1.0E-01)	8.153E+00	(7.6E-01)
89	4.400	1.063E+00	8.287E+00	1.064E+00	(9.8E-02)	8.296E+00	(7.7E-01)
90	4.450	1.044E+00	8.329E+00	1.050E+00	(9.8E-02)	8.377E+00	(7.8E-01)
91	4.500	1.025E+00	8.358E+00	1.032E+00	(9.7E-02)	8.420E+00	(8.0E-01)
92	4.550	1.009E+00	8.411E+00	1.014E+00	(9.5E-02)	8.454E+00	(7.9E-01)
93	4.600	9.970E-01	8.497E+00	9.975E-01	(9.4E-02)	8.501E+00	(8.0E-01)
94	4.650	9.882E-01	8.606E+00	9.845E-01	(9.3E-02)	8.574E+00	(8.1E-01)
95	4.700	9.802E-01	8.721E+00	9.754E-01	(9.2E-02)	8.678E+00	(8.2E-01)
96	4.750	9.726E-01	8.838E+00	9.703E-01	(9.1E-02)	8.817E+00	(8.2E-01)
97	4.800	9.671E-01	8.974E+00	9.691E-01	(9.0E-02)	8.993E+00	(8.3E-01)
98	4.850	9.666E-01	9.157E+00	9.722E-01	(8.9E-02)	9.210E+00	(8.4E-01)
99	4.900	9.727E-01	9.406E+00	9.791E-01	(8.8E-02)	9.467E+00	(8.5E-01)
100	4.950	9.846E-01	9.717E+00	9.885E-01	(8.6E-02)	9.755E+00	(8.5E-01)
101	5.000	9.987E-01	1.006E+01	9.985E-01	(8.6E-02)	1.005E+01	(8.7E-01)
102	5.050	1.010E+00	1.037E+01	1.007E+00	(8.6E-02)	1.034E+01	(8.9E-01)
103	5.100	1.015E+00	1.063E+01	1.011E+00	(8.5E-02)	1.059E+01	(8.9E-01)
104	5.150	1.013E+00	1.082E+01	1.011E+00	(8.3E-02)	1.080E+01	(8.8E-01)
105	5.200	1.006E+00	1.096E+01	1.008E+00	(8.3E-02)	1.098E+01	(9.0E-01)
106	5.250	9.980E-01	1.108E+01	1.002E+00	(8.3E-02)	1.112E+01	(9.2E-01)
107	5.300	9.907E-01	1.121E+01	9.947E-01	(8.1E-02)	1.125E+01	(9.2E-01)
108	5.350	9.848E-01	1.135E+01	9.865E-01	(8.0E-02)	1.137E+01	(9.3E-01)
109	5.400	9.783E-01	1.149E+01	9.766E-01	(8.0E-02)	1.147E+01	(9.4E-01)
110	5.450	9.687E-01	1.159E+01	9.646E-01	(7.9E-02)	1.154E+01	(9.5E-01)
111	5.500	9.550E-01	1.163E+01	9.507E-01	(7.9E-02)	1.158E+01	(9.7E-01)
112	5.550	9.388E-01	1.165E+01	9.365E-01	(7.8E-02)	1.162E+01	(9.6E-01)
113	5.600	9.243E-01	1.167E+01	9.248E-01	(7.6E-02)	1.168E+01	(9.6E-01)
114	5.650	9.161E-01	1.178E+01	9.185E-01	(7.7E-02)	1.181E+01	(1.0E+00)
115	5.700	9.170E-01	1.200E+01	9.192E-01	(7.6E-02)	1.203E+01	(1.0E+00)
116	5.750	9.266E-01	1.234E+01	9.266E-01	(7.4E-02)	1.234E+01	(9.9E-01)
117	5.800	9.411E-01	1.275E+01	9.384E-01	(7.4E-02)	1.271E+01	(1.0E+00)
118	5.850	9.568E-01	1.317E+01	9.515E-01	(7.5E-02)	1.312E+01	(1.0E+00)
119	5.900	9.667E-01	1.355E+01	9.629E-01	(7.2E-02)	1.350E+01	(1.0E+00)
120	5.950	9.728E-01	1.387E+01	9.712E-01	(7.3E-02)	1.385E+01	(1.0E+00)
121	6.000	9.759E-01	1.415E+01	9.769E-01	(7.3E-02)	1.416E+01	(1.1E+00)
122	6.050	9.794E-01	1.444E+01	9.818E-01	(7.1E-02)	1.447E+01	(1.0E+00)
123	6.100	9.862E-01	1.478E+01	9.881E-01	(7.1E-02)	1.481E+01	(1.1E+00)
124	6.150	9.971E-01	1.519E+01	9.970E-01	(7.1E-02)	1.519E+01	(1.1E+00)
125	6.200	1.011E+00	1.565E+01	1.008E+00	(6.9E-02)	1.561E+01	(1.1E+00)
126	6.250	1.023E+00	1.610E+01	1.020E+00	(6.9E-02)	1.605E+01	(1.1E+00)
127	6.300	1.033E+00	1.651E+01	1.030E+00	(6.9E-02)	1.647E+01	(1.1E+00)
128	6.350	1.036E+00	1.683E+01	1.036E+00	(6.7E-02)	1.683E+01	(1.1E+00)
129	6.400	1.035E+00	1.707E+01	1.037E+00	(6.8E-02)	1.711E+01	(1.1E+00)
130	6.450	1.030E+00	1.725E+01	1.033E+00	(6.7E-02)	1.731E+01	(1.1E+00)
131	6.500	1.022E+00	1.740E+01	1.025E+00	(6.6E-02)	1.744E+01	(1.1E+00)
132	6.550	1.015E+00	1.754E+01	1.016E+00	(6.5E-02)	1.755E+01	(1.1E+00)
133	6.600	1.009E+00	1.770E+01	1.008E+00	(6.5E-02)	1.768E+01	(1.1E+00)
134	6.650	1.005E+00	1.790E+01	1.003E+00	(6.6E-02)	1.786E+01	(1.2E+00)
135	6.700	1.004E+00	1.815E+01	1.003E+00	(6.4E-02)	1.813E+01	(1.2E+00)
136	6.750	1.006E+00	1.846E+01	1.007E+00	(6.4E-02)	1.848E+01	(1.2E+00)
137	6.800	1.012E+00	1.885E+01	1.015E+00	(6.4E-02)	1.891E+01	(1.2E+00)

H_2O at 100°C

	R	G1(R)	D1(R)	G2(R)		D2(R)	
138	6.850	1.021E+00	1.930E+01	1.025E+00	(6.3E-02)	1.937E+01	(1.2E+00)
139	6.900	1.031E+00	1.976E+01	1.033E+00	(6.2E-02)	1.981E+01	(1.2E+00)
140	6.950	1.038E+00	2.019E+01	1.039E+00	(6.1E-02)	2.021E+01	(1.2E+00)
141	7.000	1.041E+00	2.055E+01	1.040E+00	(6.2E-02)	2.052E+01	(1.2E+00)
142	7.050	1.039E+00	2.081E+01	1.037E+00	(6.2E-02)	2.077E+01	(1.2E+00)
143	7.100	1.034E+00	2.099E+01	1.033E+00	(6.1E-02)	2.097E+01	(1.2E+00)
144	7.150	1.028E+00	2.116E+01	1.029E+00	(6.0E-02)	2.118E+01	(1.2E+00)
145	7.200	1.023E+00	2.136E+01	1.026E+00	(6.1E-02)	2.141E+01	(1.3E+00)
146	7.250	1.021E+00	2.161E+01	1.024E+00	(6.0E-02)	2.167E+01	(1.3E+00)
147	7.300	1.021E+00	2.191E+01	1.022E+00	(5.9E-02)	2.194E+01	(1.3E+00)
148	7.350	1.020E+00	2.219E+01	1.019E+00	(5.9E-02)	2.218E+01	(1.3E+00)
149	7.400	1.016E+00	2.241E+01	1.014E+00	(5.9E-02)	2.236E+01	(1.3E+00)
150	7.450	1.009E+00	2.255E+01	1.006E+00	(5.8E-02)	2.249E+01	(1.3E+00)
151	7.500	9.990E-01	2.263E+01	9.973E-01	(5.8E-02)	2.259E+01	(1.3E+00)
152	7.550	9.900E-01	2.273E+01	9.898E-01	(5.7E-02)	2.272E+01	(1.3E+00)
153	7.600	9.843E-01	2.290E+01	9.855E-01	(5.7E-02)	2.293E+01	(1.3E+00)
154	7.650	9.833E-01	2.318E+01	9.848E-01	(5.7E-02)	2.321E+01	(1.3E+00)
155	7.700	9.862E-01	2.355E+01	9.866E-01	(5.6E-02)	2.356E+01	(1.3E+00)
156	7.750	9.900E-01	2.395E+01	9.888E-01	(5.6E-02)	2.392E+01	(1.3E+00)
157	7.800	9.919E-01	2.431E+01	9.894E-01	(5.6E-02)	2.424E+01	(1.4E+00)
158	7.850	9.904E-01	2.458E+01	9.876E-01	(5.5E-02)	2.451E+01	(1.4E+00)
159	7.900	9.861E-01	2.479E+01	9.843E-01	(5.5E-02)	2.474E+01	(1.4E+00)
160	7.950	9.815E-01	2.498E+01	9.812E-01	(5.3E-02)	2.498E+01	(1.4E+00)
161	8.000	9.795E-01	2.525E+01	9.804E-01	(5.5E-02)	2.527E+01	(1.4E+00)
162	8.050	9.815E-01	2.562E+01	9.825E-01	(5.3E-02)	2.564E+01	(1.4E+00)
163	8.100	9.868E-01	2.608E+01	9.869E-01	(5.3E-02)	2.608E+01	(1.4E+00)
164	8.150	9.930E-01	2.656E+01	9.917E-01	(5.3E-02)	2.653E+01	(1.4E+00)
165	8.200	9.971E-01	2.700E+01	9.950E-01	(5.3E-02)	2.694E+01	(1.4E+00)
166	8.250	9.976E-01	2.735E+01	9.956E-01	(5.3E-02)	2.729E+01	(1.5E+00)
167	8.300	9.949E-01	2.760E+01	9.941E-01	(5.1E-02)	2.758E+01	(1.4E+00)
168	8.350	9.914E-01	2.784E+01	9.921E-01	(5.2E-02)	2.786E+01	(1.5E+00)
169	8.400	9.896E-01	2.812E+01	9.913E-01	(5.0E-02)	2.817E+01	(1.4E+00)
170	8.450	9.912E-01	2.850E+01	9.928E-01	(5.2E-02)	2.855E+01	(1.5E+00)
171	8.500	9.955E-01	2.897E+01	9.961E-01	(5.0E-02)	2.898E+01	(1.5E+00)
172	8.550	1.000E+00	2.945E+01	9.995E-01	(5.1E-02)	2.943E+01	(1.5E+00)
173	8.600	1.003E+00	2.987E+01	1.001E+00	(5.1E-02)	2.983E+01	(1.5E+00)
174	8.650	1.001E+00	3.017E+01	1.000E+00	(5.0E-02)	3.015E+01	(1.5E+00)
175	8.700	9.964E-01	3.038E+01	9.959E-01	(5.1E-02)	3.039E+01	(1.5E+00)
176	8.750	9.907E-01	3.055E+01	9.926E-01	(4.8E-02)	3.061E+01	(1.5E+00)
177	8.800	9.871E-01	3.079E+01	9.897E-01	(5.0E-02)	3.087E+01	(1.6E+00)
178	8.850	9.876E-01	3.115E+01	9.897E-01	(4.7E-02)	3.122E+01	(1.5E+00)
179	8.900	9.923E-01	3.166E+01	9.932E-01	(5.0E-02)	3.168E+01	(1.6E+00)
180	8.950	9.996E-01	3.225E+01	9.992E-01	(4.7E-02)	3.223E+01	(1.5E+00)
181	9.000	1.007E+00	3.285E+01	1.006E+00	(4.9E-02)	3.282E+01	(1.6E+00)
182	9.050	1.012E+00	3.339E+01	1.012E+00	(4.7E-02)	3.337E+01	(1.5E+00)
183	9.100	1.015E+00	3.384E+01	1.015E+00	(4.8E-02)	3.386E+01	(1.6E+00)
184	9.150	1.015E+00	3.421E+01	1.017E+00	(4.8E-02)	3.428E+01	(1.6E+00)
185	9.200	1.013E+00	3.455E+01	1.016E+00	(4.7E-02)	3.463E+01	(1.6E+00)
186	9.250	1.012E+00	3.487E+01	1.014E+00	(4.7E-02)	3.493E+01	(1.6E+00)
187	9.300	1.010E+00	3.518E+01	1.010E+00	(4.5E-02)	3.518E+01	(1.6E+00)
188	9.350	1.007E+00	3.545E+01	1.006E+00	(4.7E-02)	3.541E+01	(1.7E+00)
189	9.400	1.002E+00	3.567E+01	1.001E+00	(4.5E-02)	3.561E+01	(1.6E+00)
190	9.450	9.970E-01	3.586E+01	9.957E-01	(4.6E-02)	3.581E+01	(1.7E+00)
191	9.500	9.921E-01	3.606E+01	9.922E-01	(4.5E-02)	3.606E+01	(1.6E+00)
192	9.550	9.894E-01	3.634E+01	9.908E-01	(4.6E-02)	3.639E+01	(1.7E+00)
193	9.600	9.901E-01	3.675E+01	9.919E-01	(4.5E-02)	3.682E+01	(1.7E+00)
194	9.650	9.940E-01	3.728E+01	9.949E-01	(4.5E-02)	3.731E+01	(1.7E+00)
195	9.700	9.993E-01	3.787E+01	9.984E-01	(4.4E-02)	3.784E+01	(1.7E+00)
196	9.750	1.004E+00	3.843E+01	1.001E+00	(4.5E-02)	3.833E+01	(1.7E+00)
197	9.800	1.005E+00	3.888E+01	1.002E+00	(4.3E-02)	3.877E+01	(1.7E+00)
198	9.850	1.004E+00	3.923E+01	1.002E+00	(4.5E-02)	3.915E+01	(1.7E+00)
199	9.900	1.001E+00	3.952E+01	1.001E+00	(4.3E-02)	3.951E+01	(1.7E+00)
200	9.950	9.989E-01	3.983E+01	1.001E+00	(4.4E-02)	3.990E+01	(1.7E+00)
201	10.000	9.991E-01	4.024E+01	1.002E+00	(4.3E-02)	4.035E+01	(1.7E+00)

INTEGRAL(G(R)-1) = -2.298501E+00
(G(R)-1)*R**2 = -3.252053E+00

H_2O at 100°C

	S	SI(S) 1	SI(S) 2	ERROR	DELTA SI(S)
2	.077	-.050584	-.096569	.000023	.045986
3	.154	-.100413	-.191557	.000099	.091144
4	.231	-.149359	-.284039	.000234	.134680
5	.309	-.197280	-.373146	.000439	.175865
6	.386	-.244024	-.458070	.000722	.214046
7	.463	-.289421	-.538066	.001095	.248644
8	.540	-.333283	-.612430	.001570	.279147
9	.617	-.375399	-.680491	.002159	.305092
10	.694	-.415528	-.741598	.002879	.326071
11	.771	-.453656	-.795401	.003762	.341744
12	.848	-.488903	-.840786	.004800	.351884
13	.925	-.521159	-.877564	.006025	.356405
14	1.002	-.550023	-.905413	.007459	.355390
15	1.079	-.575036	-.924108	.009130	.349072
16	1.156	-.595678	-.933462	.011068	.337784
17	1.233	-.611346	-.933245	.000810	.321898
18	1.310	-.621066	-.922843	.000417	.301776
19	1.387	-.613086	-.890855	.000511	.277769
20	1.464	-.588862	-.839124	.000629	.250261
21	1.541	-.545099	-.764838	.000775	.219739
22	1.618	-.467230	-.654066	.000970	.186836
23	1.695	-.355161	-.507473	.001214	.152312
24	1.771	-.257028	-.373995	.001442	.116967
25	1.848	-.089267	-.170775	.001768	.081508
26	1.925	.038593	-.007844	.002041	.046436
27	2.002	.235876	.223852	.002412	.012024
28	2.078	.450810	.472414	.002810	-.021605
29	2.155	.472290	.526601	.002944	-.054311
30	2.231	.535618	.621409	.003139	-.085791
31	2.308	.544212	.659734	.003260	-.115523
32	2.384	.531212	.674076	.003354	-.142864
33	2.461	.485313	.652605	.003405	-.167292
34	2.537	.448493	.637151	.003472	-.188658
35	2.614	.420205	.627556	.003553	-.207350
36	2.690	.281457	.505697	.003482	-.224240
37	2.766	.164428	.404834	.003443	-.240406
38	2.842	.132439	.389179	.003527	-.256740
39	2.918	.023177	.296774	.003507	-.273597
40	2.994	-.147359	.143308	.003403	-.290666
41	3.070	-.249898	.057243	.004752	-.307141
42	3.222	-.504444	-.169259	.004665	-.335184
43	3.374	-.755754	-.398348	.004680	-.357405
44	3.525	-.906971	-.523265	.004933	-.383706
45	3.676	-.983243	-.559666	.005349	-.423577
46	3.827	-.968156	-.492521	.005893	-.475635
47	3.978	-.847445	-.314813	.006735	-.532632
48	4.128	-.605409	-.012557	.007731	-.592851
49	4.278	-.615537	.044436	.008347	-.659973
50	4.427	-.492591	.240919	.009295	-.733510
51	4.576	-.568666	.237905	.009873	-.806572
52	4.725	-.517795	.356062	.010760	-.873858
53	4.874	-.598266	.337577	.011385	-.935843
54	5.022	-.667210	.325854	.012106	-.993064
55	5.170	-.772599	.268993	.012794	-1.041592
56	5.317	-.987683	.089900	.013265	-1.077583
57	5.464	-1.049080	.053489	.014127	-1.102570
58	5.610	-1.243940	-.123467	.014731	-1.120473
59	5.757	-1.515779	-.383776	.015165	-1.132003
60	5.902	-1.506655	-.370613	.016266	-1.136043
61	6.047	-1.496438	-.361493	.017393	-1.134945
62	6.192	-1.434657	-.300534	.018646	-1.134124
63	6.337	-1.226668	-.090078	.020180	-1.136590
64	6.480	-1.087805	.053829	.021620	-1.141633
65	6.624	-1.217638	-.068289	.022433	-1.149349
66	6.766	-.897499	.265342	.024241	-1.162841
67	6.909	-.956010	.228297	.025214	-1.184308
68	7.051	-.846096	.365675	.026220	-1.211771
69	7.192	-1.053206	.188664	.026642	-1.241870

H_2O at 150°C

	S	SI(S) 1	SI(S) 2	ERROR	DELTA SI(S)
70	7.332	-1.171614	.102327	.027520	-1.273941
71	7.473	-1.147398	.161351	.028549	-1.308750
72	7.612	-1.440127	-.095750	.028748	-1.344377
73	7.751	-1.379411	-.003097	.029730	-1.376315
74	7.890	-1.560394	-.158691	.030081	-1.401702
75	8.027	-1.615468	-.194526	.030692	-1.420942
76	8.164	-1.660663	-.226266	.031261	-1.434397
77	8.301	-1.487001	-.047256	.032253	-1.439745
78	8.437	-1.589965	-.155721	.032548	-1.434244
79	8.572	-1.455062	-.037830	.033425	-1.418232
80	8.707	-1.395174	-.001811	.034062	-1.394363
81	8.841	-1.344333	.019540	.034595	-1.363873
82	8.974	-1.235130	.090487	.035294	-1.325617
83	9.107	-1.228665	.050490	.035681	-1.279155
84	9.239	-1.104509	.122467	.036365	-1.226976
85	9.370	-1.059309	.113154	.036775	-1.172464
86	9.500	-.990282	.126373	.037273	-1.116655
87	9.630	-1.029359	.029158	.037451	-1.058517
88	9.759	-1.016283	-.018160	.037764	-.998124
89	9.887	-.936531	.001476	.038272	-.938007
90	10.015	-.878011	.002767	.038718	-.880778
91	10.142	-.883387	-.056885	.038978	-.826502
92	10.268	-.789863	-.016354	.039516	-.773508
93	10.393	-.718431	.002947	.040024	-.721378
94	10.517	-.791169	-.119212	.040116	-.671957
95	10.641	-.660706	-.033592	.040850	-.627114
96	10.764	-.636704	-.050308	.041424	-.586396
97	10.886	-.593799	-.046083	.041832	-.547716
98	11.007	-.524205	-.014150	.042418	-.510055
99	11.127	-.496457	-.021840	.042933	-.474616
100	11.247	-.421191	.021847	.043560	-.443037
101	11.366	-.457203	-.042146	.043888	-.415057
102	11.483	-.389633	-.001053	.044466	-.388580
103	11.600	-.329127	.032823	.045003	-.361950
104	11.716	-.326522	.009059	.045332	-.335580
105	11.831	-.201364	.109660	.045983	-.311024
106	11.946	-.182606	.106134	.046348	-.288740
107	12.059	-.202181	.065043	.046592	-.267224
108	12.171	-.207632	.036810	.046885	-.244441
109	12.283	-.199291	.020523	.047286	-.219813
110	12.393	-.189881	.004644	.047619	-.194526
111	12.503	-.152085	.017868	.048026	-.169953
112	12.611	-.193024	-.046979	.048158	-.146045
113	12.719	-.151452	-.030052	.048540	-.121401
114	12.826	-.151501	-.056693	.048736	-.094809
115	12.932	-.105363	-.038842	.049112	-.066520
116	13.036	-.091459	-.053498	.049378	-.037961
117	13.140	-.057644	-.047328	.049705	-.010316
118	13.243	-.012156	-.028596	.050066	.016440
119	13.345	-.021652	-.064749	.050313	.043097
120	13.445	-.014675	-.084748	.050509	.069873
121	13.644	.138862	.020432	.051261	.118430
122	13.638	.191808	.039810	.051559	.151998
123	14.028	.236496	.059319	.051781	.177177
124	14.214	.234101	.036299	.051793	.197802
125	14.395	.285527	.084332	.051893	.201195
126	14.572	.218722	.031037	.051649	.187685
127	14.744	.126761	-.045007	.051327	.171768
128	14.913	.127528	-.024470	.051296	.151998
129	15.076	.098822	-.019769	.051108	.118591
130	15.235	.071453	-.009113	.050898	.080566
131	15.389	.049786	-.003907	.050712	.053693
132	15.539	-.020675	-.053887	.050310	.033213
133	15.684	-.054001	-.056972	.049972	.002971
134	15.824	-.128431	-.092419	.049466	-.036012
135	15.959	-.177049	-.112931	.049057	-.064118

INTEGRAL(SI(S)*S) = -1.089490E+00

H_2O at 150°C

OBSERVED RADIAL DISTRIBUTION FUNCTIONS (RDF2 = 0 FROM R= 0 TO R= 2.30)

	R	G1(R)	D1(R)	G2(R)		D2(R)	
1	0	1.000E+00	0	1.000E+00	(0)	0	(0)
2	.050	-9.764E+01	-9.405E-02	-7.174E-01	(7.5E+00)	-6.910E-04	(7.2E-03)
3	.100	-8.990E+01	-3.464E-01	-4.994E-01	(6.2E+00)	-1.924E-03	(2.4E-02)
4	.150	-7.788E+01	-6.751E-01	-2.245E-01	(4.3E+00)	-1.946E-03	(3.7E-02)
5	.200	-6.279E+01	-9.677E-01	1.519E-02	(2.3E+00)	2.341E-04	(3.5E-02)
6	.250	-4.618E+01	-1.112E+00	1.511E-01	(1.5E+00)	3.639E-03	(3.7E-02)
7	.300	-2.970E+01	-1.030E+00	1.642E-01	(1.6E+00)	5.695E-03	(5.4E-02)
8	.350	-1.491E+01	-7.035E-01	8.650E-02	(1.5E+00)	4.083E-03	(6.9E-02)
9	.400	-3.043E+00	-1.876E-01	-1.961E-02	(1.1E+00)	-1.209E-03	(6.9E-02)
10	.450	5.169E+00	4.033E-01	-9.320E-02	(9.3E-01)	-7.271E-03	(7.3E-02)
11	.500	9.610E+00	9.256E-01	-1.021E-01	(9.4E-01)	-9.836E-03	(9.0E-02)
12	.550	1.074E+01	1.252E+00	-5.322E-02	(9.1E-01)	-6.203E-03	(1.1E-01)
13	.600	9.467E+00	1.313E+00	1.761E-02	(7.6E-01)	2.443E-03	(1.1E-01)
14	.650	6.890E+00	1.122E+00	6.829E-02	(6.8E-01)	1.112E-02	(1.1E-01)
15	.700	4.063E+00	7.670E-01	7.350E-02	(6.7E-01)	1.388E-02	(1.3E-01)
16	.750	1.764E+00	3.823E-01	3.605E-02	(6.5E-01)	7.813E-03	(1.4E-01)
17	.800	3.849E-01	9.492E-02	-1.802E-02	(5.7E-01)	-4.443E-03	(1.4E-01)
18	.850	-7.102E-02	-1.977E-02	-5.622E-02	(5.2E-01)	-1.565E-02	(1.5E-01)
19	.900	1.242E-01	3.878E-02	-5.823E-02	(5.2E-01)	-1.817E-02	(1.6E-01)
20	.950	5.893E-01	2.049E-01	-2.604E-02	(5.1E-01)	-9.055E-03	(1.8E-01)
21	1.000	9.941E-01	3.830E-01	1.909E-02	(4.5E-01)	7.355E-03	(1.8E-01)
22	1.050	1.163E+00	4.939E-01	5.019E-02	(4.3E-01)	2.132E-02	(1.8E-01)
23	1.100	1.092E+00	5.091E-01	5.029E-02	(4.3E-01)	2.344E-02	(2.0E-01)
24	1.150	8.969E-01	4.570E-01	2.137E-02	(4.2E-01)	1.089E-02	(2.1E-01)
25	1.200	7.195E-01	3.992E-01	-1.797E-02	(3.8E-01)	-9.969E-03	(2.1E-01)
26	1.250	6.478E-01	3.900E-01	-4.417E-02	(3.6E-01)	-2.659E-02	(2.2E-01)
27	1.300	6.783E-01	4.417E-01	-4.256E-02	(3.6E-01)	-2.771E-02	(2.4E-01)
28	1.350	7.323E-01	5.142E-01	-1.538E-02	(3.5E-01)	-1.080E-02	(2.5E-01)
29	1.400	7.110E-01	5.369E-01	2.028E-02	(3.2E-01)	1.532E-02	(2.4E-01)
30	1.450	5.561E-01	4.505E-01	4.301E-02	(3.2E-01)	3.484E-02	(2.6E-01)
31	1.500	2.848E-01	2.469E-01	3.968E-02	(3.2E-01)	3.440E-02	(2.7E-01)
32	1.550	-1.670E-02	-1.546E-02	1.290E-02	(3.1E-01)	1.194E-02	(2.8E-01)
33	1.600	-2.356E-01	-2.324E-01	-2.094E-02	(2.9E-01)	-2.066E-02	(2.8E-01)
34	1.650	-2.874E-01	-3.014E-01	-4.159E-02	(2.8E-01)	-4.362E-02	(2.9E-01)
35	1.700	-1.560E-01	-1.737E-01	-3.686E-02	(2.8E-01)	-4.104E-02	(3.1E-01)
36	1.750	9.984E-02	1.176E-01	-9.763E-03	(2.7E-01)	-1.152E-02	(3.2E-01)
37	1.800	3.760E-01	4.694E-01	2.334E-02	(2.5E-01)	2.914E-02	(3.2E-01)
38	1.850	5.709E-01	7.528E-01	4.240E-02	(2.5E-01)	5.591E-02	(3.3E-01)
39	1.900	6.286E-01	8.743E-01	3.546E-02	(2.5E-01)	4.933E-02	(3.4E-01)
40	1.950	5.579E-01	8.173E-01	5.900E-03	(2.4E-01)	8.644E-03	(3.5E-01)
41	2.000	4.188E-01	6.455E-01	-2.924E-02	(2.3E-01)	-4.506E-02	(3.5E-01)
42	2.050	2.877E-01	4.658E-01	-4.879E-02	(2.3E-01)	-7.901E-02	(3.7E-01)
43	2.100	2.182E-01	3.707E-01	-3.961E-02	(2.2E-01)	-6.730E-02	(3.8E-01)
44	2.150	2.194E-01	3.908E-01	-4.259E-03	(2.2E-01)	-7.585E-03	(3.9E-01)
45	2.200	2.586E-01	4.822E-01	4.023E-02	(2.1E-01)	7.501E-02	(3.9E-01)
46	2.250	2.856E-01	5.571E-01	7.238E-02	(2.1E-01)	1.412E-01	(4.0E-01)
47	2.300	2.651E-01	5.403E-01	7.981E-02	(2.0E-01)	1.627E-01	(4.2E-01)
48	2.350	1.983E-01	4.218E-01	6.907E-02	(2.0E-01)	1.470E-01	(4.2E-01)
49	2.400	1.243E-01	2.759E-01	6.609E-02	(1.9E-01)	1.467E-01	(4.2E-01)
50	2.450	1.018E-01	2.354E-01	1.066E-01	(1.9E-01)	2.466E-01	(4.3E-01)
51	2.500	1.800E-01	4.334E-01	2.206E-01	(1.9E-01)	5.312E-01	(4.5E-01)
52	2.550	3.749E-01	9.392E-01	4.181E-01	(1.8E-01)	1.047E+00	(4.6E-01)
53	2.600	6.614E-01	1.723E+00	6.829E-01	(1.8E-01)	1.779E+00	(4.6E-01)
54	2.650	9.839E-01	2.662E+00	9.774E-01	(1.7E-01)	2.644E+00	(4.7E-01)
55	2.700	1.279E+00	3.593E+00	1.255E+00	(1.7E-01)	3.525E+00	(4.9E-01)
56	2.750	1.500E+00	4.372E+00	1.476E+00	(1.7E-01)	4.302E+00	(4.9E-01)
57	2.800	1.629E+00	4.922E+00	1.620E+00	(1.6E-01)	4.893E+00	(4.9E-01)
58	2.850	1.677E+00	5.248E+00	1.686E+00	(1.6E-01)	5.277E+00	(5.1E-01)
59	2.900	1.671E+00	5.415E+00	1.691E+00	(1.6E-01)	5.480E+00	(5.2E-01)
60	2.950	1.639E+00	5.495E+00	1.657E+00	(1.6E-01)	5.556E+00	(5.2E-01)
61	3.000	1.597E+00	5.537E+00	1.603E+00	(1.5E-01)	5.558E+00	(5.3E-01)
62	3.050	1.547E+00	5.545E+00	1.539E+00	(1.5E-01)	5.517E+00	(5.4E-01)
63	3.100	1.484E+00	5.494E+00	1.469E+00	(1.5E-01)	5.438E+00	(5.6E-01)
64	3.150	1.403E+00	5.363E+00	1.390E+00	(1.5E-01)	5.312E+00	(5.6E-01)
65	3.200	1.306E+00	5.154E+00	1.303E+00	(1.4E-01)	5.140E+00	(5.6E-01)
66	3.250	1.206E+00	4.909E+00	1.213E+00	(1.4E-01)	4.937E+00	(5.8E-01)
67	3.300	1.118E+00	4.691E+00	1.130E+00	(1.4E-01)	4.741E+00	(5.9E-01)
68	3.350	1.054E+00	4.558E+00	1.063E+00	(1.4E-01)	4.598E+00	(5.9E-01)

H_2O at 150°C

	R	G1(R)	D1(R)	G2(R)		D2(R)	
69	3.400	1.020E+00	4.542E+00	1.021E+00	(1.3E-01)	4.546E+00	(6.0E-01)
70	3.450	1.011E+00	4.637E+00	1.003E+00	(1.3E-01)	4.602E+00	(6.1E-01)
71	3.500	1.020E+00	4.813E+00	1.008E+00	(1.3E-01)	4.758E+00	(6.3E-01)
72	3.550	1.036E+00	5.030E+00	1.027E+00	(1.3E-01)	4.986E+00	(6.3E-01)
73	3.600	1.053E+00	5.256E+00	1.051E+00	(1.3E-01)	5.247E+00	(6.4E-01)
74	3.650	1.067E+00	5.475E+00	1.072E+00	(1.3E-01)	5.501E+00	(6.5E-01)
75	3.700	1.076E+00	5.676E+00	1.084E+00	(1.3E-01)	5.719E+00	(6.7E-01)
76	3.750	1.080E+00	5.849E+00	1.085E+00	(1.2E-01)	5.880E+00	(6.6E-01)
77	3.800	1.075E+00	5.981E+00	1.075E+00	(1.2E-01)	5.978E+00	(6.7E-01)
78	3.850	1.061E+00	6.059E+00	1.055E+00	(1.2E-01)	6.022E+00	(6.9E-01)
79	3.900	1.038E+00	6.083E+00	1.029E+00	(1.2E-01)	6.032E+00	(7.1E-01)
80	3.950	1.010E+00	6.073E+00	1.004E+00	(1.2E-01)	6.037E+00	(7.1E-01)
81	4.000	9.840E-01	6.066E+00	9.837E-01	(1.2E-01)	6.064E+00	(7.1E-01)
82	4.050	9.654E-01	6.101E+00	9.703E-01	(1.1E-01)	6.132E+00	(7.3E-01)
83	4.100	9.571E-01	6.199E+00	9.638E-01	(1.1E-01)	6.242E+00	(7.4E-01)
84	4.150	9.571E-01	6.351E+00	9.615E-01	(1.1E-01)	6.380E+00	(7.4E-01)
85	4.200	9.599E-01	6.524E+00	9.596E-01	(1.1E-01)	6.522E+00	(7.4E-01)
86	4.250	9.596E-01	6.678E+00	9.552E-01	(1.1E-01)	6.648E+00	(7.6E-01)
87	4.300	9.534E-01	6.792E+00	9.480E-01	(1.1E-01)	6.753E+00	(7.8E-01)
88	4.350	9.433E-01	6.877E+00	9.402E-01	(1.1E-01)	6.855E+00	(7.8E-01)
89	4.400	9.344E-01	6.970E+00	9.357E-01	(1.1E-01)	6.979E+00	(7.9E-01)
90	4.450	9.325E-01	7.114E+00	9.373E-01	(1.0E-01)	7.151E+00	(8.0E-01)
91	4.500	9.399E-01	7.333E+00	9.457E-01	(1.0E-01)	7.378E+00	(8.2E-01)
92	4.550	9.548E-01	7.612E+00	9.584E-01	(1.0E-01)	7.644E+00	(8.1E-01)
93	4.600	9.715E-01	7.920E+00	9.714E-01	(1.0E-01)	7.920E+00	(8.2E-01)
94	4.650	9.842E-01	8.199E+00	9.812E-01	(1.0E-01)	8.175E+00	(8.3E-01)
95	4.700	9.899E-01	8.425E+00	9.865E-01	(9.8E-02)	8.396E+00	(8.4E-01)
96	4.750	9.899E-01	8.605E+00	9.885E-01	(9.7E-02)	8.593E+00	(8.4E-01)
97	4.800	9.884E-01	8.774E+00	9.903E-01	(9.6E-02)	8.791E+00	(8.6E-01)
98	4.850	9.898E-01	8.971E+00	9.941E-01	(9.6E-02)	9.009E+00	(8.7E-01)
99	4.900	9.956E-01	9.210E+00	9.999E-01	(9.4E-02)	9.249E+00	(8.7E-01)
100	4.950	1.003E+00	9.469E+00	1.005E+00	(9.3E-02)	9.489E+00	(8.7E-01)
101	5.000	1.007E+00	9.700E+00	1.006E+00	(9.2E-02)	9.691E+00	(8.9E-01)
102	5.050	1.003E+00	9.858E+00	1.000E+00	(9.2E-02)	9.828E+00	(9.1E-01)
103	5.100	9.909E-01	9.931E+00	9.879E-01	(9.1E-02)	9.900E+00	(9.2E-01)
104	5.150	9.739E-01	9.952E+00	9.729E-01	(8.9E-02)	9.942E+00	(9.1E-01)
105	5.200	9.589E-01	9.990E+00	9.605E-01	(8.9E-02)	1.001E+01	(9.2E-01)
106	5.250	9.519E-01	1.011E+01	9.550E-01	(8.9E-02)	1.014E+01	(9.4E-01)
107	5.300	9.546E-01	1.033E+01	9.573E-01	(8.7E-02)	1.036E+01	(9.4E-01)
108	5.350	9.640E-01	1.063E+01	9.644E-01	(8.7E-02)	1.064E+01	(9.6E-01)
109	5.400	9.733E-01	1.093E+01	9.710E-01	(8.6E-02)	1.091E+01	(9.7E-01)
110	5.450	9.762E-01	1.117E+01	9.725E-01	(8.5E-02)	1.113E+01	(9.7E-01)
111	5.500	9.703E-01	1.131E+01	9.671E-01	(8.5E-02)	1.127E+01	(9.9E-01)
112	5.550	9.586E-01	1.138E+01	9.574E-01	(8.4E-02)	1.136E+01	(9.9E-01)
113	5.600	9.476E-01	1.145E+01	9.488E-01	(8.2E-02)	1.146E+01	(9.9E-01)
114	5.650	9.442E-01	1.161E+01	9.466E-01	(8.3E-02)	1.164E+01	(1.0E+00)
115	5.700	9.516E-01	1.191E+01	9.533E-01	(8.1E-02)	1.193E+01	(1.0E+00)
116	5.750	9.679E-01	1.233E+01	9.676E-01	(8.0E-02)	1.233E+01	(1.0E+00)
117	5.800	9.871E-01	1.279E+01	9.845E-01	(8.0E-02)	1.276E+01	(1.0E+00)
118	5.850	1.002E+00	1.322E+01	9.966E-01	(8.0E-02)	1.317E+01	(1.1E+00)
119	5.900	1.009E+00	1.354E+01	1.007E+00	(7.8E-02)	1.350E+01	(1.0E+00)
120	5.950	1.009E+00	1.377E+01	1.009E+00	(7.8E-02)	1.376E+01	(1.1E+00)
121	6.000	1.006E+00	1.396E+01	1.008E+00	(7.8E-02)	1.398E+01	(1.1E+00)
122	6.050	1.006E+00	1.418E+01	1.008E+00	(7.6E-02)	1.422E+01	(1.1E+00)
123	6.100	1.012E+00	1.450E+01	1.014E+00	(7.6E-02)	1.453E+01	(1.1E+00)
124	6.150	1.023E+00	1.491E+01	1.023E+00	(7.6E-02)	1.491E+01	(1.1E+00)
125	6.200	1.036E+00	1.534E+01	1.034E+00	(7.4E-02)	1.531E+01	(1.1E+00)
126	6.250	1.044E+00	1.572E+01	1.042E+00	(7.5E-02)	1.568E+01	(1.1E+00)
127	6.300	1.046E+00	1.599E+01	1.044E+00	(7.4E-02)	1.596E+01	(1.1E+00)
128	6.350	1.040E+00	1.610E+01	1.040E+00	(7.2E-02)	1.616E+01	(1.1E+00)
129	6.400	1.030E+00	1.620E+01	1.032E+00	(7.2E-02)	1.629E+01	(1.1E+00)
130	6.450	1.021E+00	1.637E+01	1.024E+00	(7.2E-02)	1.642E+01	(1.2E+00)
131	6.500	1.016E+00	1.654E+01	1.018E+00	(7.1E-02)	1.657E+01	(1.2E+00)
132	6.550	1.014E+00	1.677E+01	1.015E+00	(7.0E-02)	1.678E+01	(1.2E+00)
133	6.600	1.015E+00	1.703E+01	1.014E+00	(7.0E-02)	1.702E+01	(1.2E+00)
134	6.650	1.014E+00	1.728E+01	1.013E+00	(7.0E-02)	1.725E+01	(1.2E+00)
135	6.700	1.011E+00	1.749E+01	1.010E+00	(6.9E-02)	1.747E+01	(1.2E+00)
136	6.750	1.006E+00	1.767E+01	1.007E+00	(6.9E-02)	1.768E+01	(1.2E+00)
137	6.800	1.003E+00	1.786E+01	1.005E+00	(6.8E-02)	1.790E+01	(1.2E+00)

H_2O at 150°C

	R	G1(R)	D1(R)	G2(R)		D2(R)	
138	6.850	1.002E+00	1.812E+01	1.005E+00	(6.8E-02)	1.816E+01	(1.2E+00)
139	6.900	1.006E+00	1.845E+01	1.007E+00	(6.7E-02)	1.848E+01	(1.2E+00)
140	6.950	1.011E+00	1.881E+01	1.011E+00	(6.6E-02)	1.882E+01	(1.2E+00)
141	7.000	1.014E+00	1.915E+01	1.013E+00	(6.7E-02)	1.913E+01	(1.3E+00)
142	7.050	1.013E+00	1.940E+01	1.012E+00	(6.6E-02)	1.937E+01	(1.3E+00)
143	7.100	1.006E+00	1.954E+01	1.006E+00	(6.5E-02)	1.953E+01	(1.3E+00)
144	7.150	9.964E-01	1.963E+01	9.969E-01	(6.4E-02)	1.964E+01	(1.3E+00)
145	7.200	9.882E-01	1.974E+01	9.896E-01	(6.6E-02)	1.977E+01	(1.3E+00)
146	7.250	9.856E-01	1.996E+01	9.872E-01	(6.4E-02)	1.999E+01	(1.3E+00)
147	7.300	9.904E-01	2.033E+01	9.911E-01	(6.3E-02)	2.035E+01	(1.3E+00)
148	7.350	1.000E+00	2.082E+01	9.997E-01	(6.3E-02)	2.081E+01	(1.3E+00)
149	7.400	1.011E+00	2.133E+01	1.009E+00	(6.3E-02)	2.129E+01	(1.3E+00)
150	7.450	1.017E+00	2.174E+01	1.015E+00	(6.3E-02)	2.171E+01	(1.3E+00)
151	7.500	1.015E+00	2.200E+01	1.014E+00	(6.2E-02)	2.198E+01	(1.3E+00)
152	7.550	1.007E+00	2.211E+01	1.007E+00	(6.1E-02)	2.212E+01	(1.3E+00)
153	7.600	9.950E-01	2.214E+01	9.900E-01	(6.0E-02)	2.216E+01	(1.3E+00)
154	7.650	9.846E-01	2.220E+01	9.854E-01	(6.2E-02)	2.222E+01	(1.4E+00)
155	7.700	9.792E-01	2.237E+01	9.790E-01	(6.0E-02)	2.236E+01	(1.4E+00)
156	7.750	9.795E-01	2.267E+01	9.780E-01	(6.0E-02)	2.263E+01	(1.4E+00)
157	7.800	9.837E-01	2.306E+01	9.815E-01	(6.0E-02)	2.301E+01	(1.4E+00)
158	7.850	9.887E-01	2.348E+01	9.869E-01	(5.9E-02)	2.343E+01	(1.4E+00)
159	7.900	9.923E-01	2.386E+01	9.916E-01	(6.0E-02)	2.384E+01	(1.4E+00)
160	7.950	9.937E-01	2.420E+01	9.943E-01	(5.7E-02)	2.421E+01	(1.4E+00)
161	8.000	9.942E-01	2.451E+01	9.955E-01	(5.9E-02)	2.455E+01	(1.4E+00)
162	8.050	9.958E-01	2.486E+01	9.967E-01	(5.7E-02)	2.489E+01	(1.4E+00)
163	8.100	9.997E-01	2.527E+01	9.995E-01	(5.8E-02)	2.527E+01	(1.5E+00)
164	8.150	1.005E+00	2.573E+01	1.004E+00	(5.7E-02)	2.570E+01	(1.5E+00)
165	8.200	1.011E+00	2.619E+01	1.009E+00	(5.6E-02)	2.614E+01	(1.5E+00)
166	8.250	1.014E+00	2.659E+01	1.013E+00	(5.7E-02)	2.655E+01	(1.5E+00)
167	8.300	1.013E+00	2.688E+01	1.013E+00	(5.5E-02)	2.688E+01	(1.5E+00)
168	8.350	1.008E+00	2.707E+01	1.009E+00	(5.7E-02)	2.710E+01	(1.5E+00)
169	8.400	1.001E+00	2.720E+01	1.002E+00	(5.4E-02)	2.725E+01	(1.5E+00)
170	8.450	9.938E-01	2.734E+01	9.954E-01	(5.6E-02)	2.738E+01	(1.5E+00)
171	8.500	9.895E-01	2.754E+01	9.900E-01	(5.4E-02)	2.756E+01	(1.5E+00)
172	8.550	9.882E-01	2.783E+01	9.874E-01	(5.5E-02)	2.781E+01	(1.5E+00)
173	8.600	9.890E-01	2.818E+01	9.876E-01	(5.5E-02)	2.814E+01	(1.6E+00)
174	8.650	9.902E-01	2.855E+01	9.893E-01	(5.3E-02)	2.852E+01	(1.5E+00)
175	8.700	9.905E-01	2.888E+01	9.908E-01	(5.4E-02)	2.889E+01	(1.6E+00)
176	8.750	9.894E-01	2.918E+01	9.910E-01	(5.1E-02)	2.923E+01	(1.5E+00)
177	8.800	9.877E-01	2.947E+01	9.899E-01	(5.4E-02)	2.953E+01	(1.6E+00)
178	8.850	9.867E-01	2.977E+01	9.885E-01	(5.1E-02)	2.983E+01	(1.5E+00)
179	8.900	9.876E-01	3.014E+01	9.883E-01	(5.3E-02)	3.016E+01	(1.6E+00)
180	8.950	9.909E-01	3.058E+01	9.903E-01	(5.0E-02)	3.056E+01	(1.5E+00)
181	9.000	9.961E-01	3.109E+01	9.950E-01	(5.3E-02)	3.105E+01	(1.6E+00)
182	9.050	1.002E+00	3.163E+01	1.001E+00	(5.1E-02)	3.160E+01	(1.6E+00)
183	9.100	1.008E+00	3.217E+01	1.008E+00	(5.1E-02)	3.217E+01	(1.6E+00)
184	9.150	1.013E+00	3.267E+01	1.014E+00	(5.1E-02)	3.271E+01	(1.6E+00)
185	9.200	1.016E+00	3.313E+01	1.017E+00	(5.0E-02)	3.318E+01	(1.6E+00)
186	9.250	1.017E+00	3.352E+01	1.018E+00	(5.1E-02)	3.356E+01	(1.7E+00)
187	9.300	1.016E+00	3.385E+01	1.016E+00	(4.9E-02)	3.385E+01	(1.6E+00)
188	9.350	1.013E+00	3.412E+01	1.012E+00	(5.1E-02)	3.408E+01	(1.7E+00)
189	9.400	1.009E+00	3.435E+01	1.007E+00	(4.8E-02)	3.430E+01	(1.6E+00)
190	9.450	1.005E+00	3.456E+01	1.004E+00	(5.0E-02)	3.453E+01	(1.7E+00)
191	9.500	1.001E+00	3.481E+01	1.001E+00	(4.9E-02)	3.481E+01	(1.7E+00)
192	9.550	9.990E-01	3.510E+01	9.998E-01	(4.9E-02)	3.513E+01	(1.7E+00)
193	9.600	9.987E-01	3.546E+01	9.996E-01	(4.8E-02)	3.549E+01	(1.7E+00)
194	9.650	9.994E-01	3.586E+01	9.995E-01	(4.8E-02)	3.586E+01	(1.7E+00)
195	9.700	9.998E-01	3.624E+01	9.988E-01	(4.7E-02)	3.621E+01	(1.7E+00)
196	9.750	9.989E-01	3.658E+01	9.970E-01	(4.9E-02)	3.652E+01	(1.8E+00)
197	9.800	9.964E-01	3.687E+01	9.946E-01	(4.6E-02)	3.680E+01	(1.7E+00)
198	9.850	9.934E-01	3.713E+01	9.926E-01	(4.8E-02)	3.711E+01	(1.8E+00)
199	9.900	9.915E-01	3.744E+01	9.923E-01	(4.5E-02)	3.747E+01	(1.7E+00)
200	9.950	9.924E-01	3.785E+01	9.944E-01	(4.7E-02)	3.793E+01	(1.8E+00)
201	10.000	9.967E-01	3.840E+01	9.989E-01	(4.6E-02)	3.849E+01	(1.8E+00)

INTEGRAL(G(R)-1) = -2.286837E+00
(G(R)-1)*R**2 = -3.294505E+00

H_2O at 150°C

	S	SI(S) 1	SI(S) 2	ERROR	DELTA SI(S)
2	.077	-.049779	-.090097	.000063	.040318
3	.154	-.097280	-.177795	.000254	.080515
4	.231	-.142493	-.262814	.000574	.120321
5	.309	-.185384	-.344647	.001027	.159263
6	.386	-.225898	-.422609	.001618	.196711
7	.463	-.263956	-.495989	.002353	.232033
8	.540	-.299450	-.564211	.003240	.264760
9	.617	-.332245	-.626937	.004289	.294691
10	.694	-.362171	-.684040	.005511	.321869
11	.771	-.389030	-.735487	.006949	.346457
12	.848	-.412490	-.781058	.008565	.368567
13	.925	-.432340	-.820484	.010398	.388144
14	1.002	-.448271	-.853226	.012464	.404955
15	1.079	-.459922	-.878632	.014787	.418710
16	1.156	-.466876	-.896103	.017391	.429228
17	1.233	-.468643	-.905223	.001290	.436579
18	1.310	-.402586	-.843700	.000728	.441114
19	1.387	-.387989	-.831345	.000833	.443356
20	1.464	-.393470	-.837285	.000910	.443815
21	1.541	-.331311	-.774124	.001086	.442813
22	1.618	-.244103	-.684508	.001298	.440405
23	1.695	-.105424	-.541879	.001586	.436454
24	1.771	.061024	-.369781	.001918	.430804
25	1.848	.223193	-.200279	.002243	.423472
26	1.925	.403258	-.011489	.002596	.414747
27	2.002	.635444	.230304	.003026	.405140
28	2.078	.735692	.340491	.003268	.395201
29	2.155	.925621	.540335	.003641	.385286
30	2.231	.992354	.616946	.003839	.375408
31	2.308	1.104023	.738779	.004104	.365244
32	2.384	1.136151	.781844	.004257	.354308
33	2.461	1.062232	.720022	.004258	.342210
34	2.537	1.016808	.687939	.004302	.328869
35	2.614	1.028380	.713817	.004431	.314563
36	2.690	.875297	.575516	.004323	.299780
37	2.766	.761284	.476340	.004271	.284944
38	2.842	.549909	.279775	.004082	.270134
39	2.918	.463707	.208742	.004076	.254965
40	2.994	.326071	.087377	.003998	.238694
41	3.070	.143375	-.077156	.003856	.220531
42	3.146	.017134	-.182876	.003798	.200010
43	3.222	-.084268	-.261512	.003778	.177244
44	3.298	-.207028	-.359963	.003729	.152935
45	3.374	-.316323	-.444425	.003698	.128102
46	3.450	-.385712	-.489355	.003732	.103643
47	3.525	-.413680	-.493598	.003829	.079918
48	3.601	-.473668	-.530216	.003882	.056548
49	3.676	-.438966	-.471503	.004077	.032537
50	3.752	-.494582	-.501265	.004137	.006682
51	3.827	-.461709	-.439807	.004335	-.021902
52	3.902	-.437033	-.383678	.004529	-.053355
53	3.978	-.383764	-.296829	.006860	-.086935
54	4.128	-.232149	-.077533	.007624	-.156616
55	4.278	-.072994	.141384	.008450	-.214378
56	4.427	.011417	.276606	.009195	-.265190
57	4.576	.084609	.398653	.009923	-.314045
58	4.725	.020328	.385044	.010392	-.364716
59	4.874	-.082638	.331233	.010784	-.413872
60	5.022	-.164066	.294451	.011270	-.458517
61	5.170	-.331202	.170782	.011603	-.501984
62	5.317	-.551815	-.001549	.011834	-.550266
63	5.464	-.730386	-.124320	.012189	-.606067
64	5.610	-.922086	-.252525	.012536	-.669562
65	5.757	-1.046786	-.303891	.013025	-.742894
66	5.902	-1.136222	-.305855	.013620	-.830367
67	6.047	-1.212442	-.280949	.014250	-.934494
68	6.192	-1.229376	-.174892	.015028	-1.054484
69	6.337	-1.263681	-.074884	.015723	-1.188797

H_2O at 200°C

	S	SI(S) 1	SI(S) 2	ERROR	DELTA SI(S)
70	6.480	-1.319544	.017333	.016407	-1.336877
71	6.624	-1.399148	.098280	.017036	-1.497428
72	6.766	-1.398420	.268163	.017805	-1.666583
73	6.909	-1.536470	.302579	.018278	-1.839049
74	7.051	-1.768498	.241766	.018524	-2.010264
75	7.192	-2.059117	.117281	.028905	-2.176398
76	7.332	-2.317995	.014945	.029371	-2.332940
77	7.473	-2.495918	-.021182	.029911	-2.474736
78	7.612	-2.645227	-.047619	.030392	-2.597608
79	7.751	-2.761994	-.062829	.030973	-2.699165
80	7.890	-2.871106	-.093149	.031554	-2.777957
81	8.027	-2.936012	-.103316	.032231	-2.832695
82	8.164	-2.981522	-.118693	.032908	-2.862830
83	8.301	-2.943375	-.074006	.033733	-2.869369
84	8.437	-2.973019	-.118465	.034340	-2.854554
85	8.572	-2.822691	-.001836	.035572	-2.820855
86	8.707	-2.786013	-.015343	.036341	-2.770670
87	8.841	-2.690686	.016118	.037250	-2.706804
88	8.974	-2.543818	.088775	.038367	-2.632593
89	9.107	-2.478295	.072970	.039151	-2.551265
90	9.239	-2.392426	.072915	.039985	-2.465341
91	9.370	-2.332009	.044777	.040667	-2.376786
92	9.500	-2.244213	.043206	.041480	-2.287420
93	9.630	-2.173376	.025474	.042219	-2.198850
94	9.759	-2.066043	.045994	.034775	-2.112037
95	9.887	-1.993532	.033692	.035339	-2.027224
96	10.015	-1.929100	.015255	.035883	-1.944355
97	10.142	-1.909478	-.046057	.036370	-1.863421
98	10.268	-1.856138	-.071822	.036915	-1.784316
99	10.393	-1.763739	-.057155	.037621	-1.706584
100	10.517	-1.640863	-.011294	.038453	-1.629570
101	10.641	-1.589085	-.036231	.039063	-1.552854
102	10.764	-1.502087	-.025670	.039876	-1.476417
103	10.886	-1.484720	-.084376	.040401	-1.400345
104	11.007	-1.356019	-.031466	.041317	-1.324553
105	11.127	-1.235092	.013840	.042210	-1.248931
106	11.247	-1.166220	.007499	.042920	-1.173718
107	11.366	-1.084564	.014992	.043715	-1.099555
108	11.483	-.976191	.050906	.044542	-1.027097
109	11.600	-.908960	.047676	.045200	-.956636
110	11.716	-.845118	.043080	.045825	-.888197
111	11.831	-.764089	.057854	.046435	-.821943
112	11.946	-.702998	.055354	.047033	-.758353
113	12.059	-.643335	.054575	.047629	-.697911
114	12.171	-.611275	.029373	.048128	-.640648
115	12.283	-.646351	-.060272	.048448	-.586079
116	12.393	-.597868	-.064240	.048995	-.533628
117	12.503	-.586003	-.102929	.049386	-.483074
118	12.611	-.440135	-.005595	.050244	-.434540
119	12.719	-.470436	-.082397	.050436	-.388039
120	12.826	-.377689	-.034581	.051012	-.343107
121	12.932	-.329441	-.030532	.051466	-.298909
122	13.036	-.213118	.041646	.052160	-.254763
123	13.140	-.096884	.113684	.052848	-.210568
124	13.243	-.150189	.016551	.052917	-.166740
125	13.345	-.077620	.046132	.053505	-.123751
126	13.445	-.056398	.025305	.053798	-.081703
127	13.545	.016796	.057120	.054246	-.040324
128	13.644	.021187	.020539	.054455	.000648
129	13.838	-.037268	-.117581	.054372	.080314
130	14.028	.150932	-.001466	.055217	.152398
131	14.214	.233605	.019721	.055579	.213885
132	14.395	.295701	.032057	.055780	.263644
133	14.572	.254028	-.043805	.055643	.297833
134	14.744	.369025	.054017	.056016	.315008
135	14.913	.302214	-.016693	.055807	.318907
136	15.076	.292979	-.018112	.055707	.311091
137	15.235	.291549	.002035	.055600	.289515
138	15.389	.270753	.013992	.055440	.256761

H_2O at 200°C

	S	SI(S) 1	SI(S) 2	ERROR	DELTA SI(S)
139	15.539	.278998	.057603	.055272	.221395
140	15.684	.233758	.044959	.054898	.188800
141	15.824	.199450	.043010	.054485	.156440
142	15.959	.034362	-.085857	.053727	.120219

INTEGRAL(SI(S)*S) = -3.320858E-01

OBSERVED RADIAL DISTRIBUTION FUNCTIONS (RDF2 = 0 FROM R= 0 TO R= 2.30)

	R	G1(R)	D1(R)	G2(R)	D2(R)
1	0	1.000E+00	0	1.000E+00 (0)	0 (0)
2	.050	-1.769E+02	-1.606E-01	3.765E-01 (8.2E+00)	3.420E-04 (7.5E-03)
3	.100	-1.600E+02	-5.813E-01	2.665E-01 (6.7E+00)	9.682E-04 (2.4E-02)
4	.150	-1.340E+02	-1.095E+00	1.254E-01 (4.6E+00)	1.025E-03 (3.8E-02)
5	.200	-1.017E+02	-1.477E+00	-1.488E-03 (2.4E+00)	-2.162E-05 (3.5E-02)
6	.250	-6.671E+01	-1.515E+00	-7.907E-02 (1.7E+00)	-1.795E-03 (3.7E-02)
7	.300	-3.311E+01	-1.082E+00	-9.481E-02 (1.7E+00)	-3.100E-03 (5.5E-02)
8	.350	-4.484E+00	-1.996E-01	-6.102E-02 (1.6E+00)	-2.716E-03 (7.0E-02)
9	.400	1.646E+01	9.569E-01	-6.511E-03 (1.2E+00)	-3.784E-04 (6.9E-02)
10	.450	2.846E+01	2.094E+00	3.784E-02 (1.0E+00)	2.784E-03 (7.4E-02)
11	.500	3.188E+01	2.895E+00	5.251E-02 (1.0E+00)	4.770E-03 (9.4E-02)
12	.550	2.848E+01	3.130E+00	3.605E-02 (1.0E+00)	3.962E-03 (1.1E-01)
13	.600	2.093E+01	2.738E+00	2.582E-03 (8.3E-01)	3.377E-04 (1.1E-01)
14	.650	1.208E+01	1.855E+00	-2.755E-02 (7.3E-01)	-4.229E-03 (1.1E-01)
15	.700	4.269E+00	7.599E-01	-3.880E-02 (7.2E-01)	-6.908E-03 (1.3E-01)
16	.750	-1.135E+00	-2.319E-01	-2.764E-02 (7.0E-01)	-5.648E-03 (1.4E-01)
17	.800	-3.805E+00	-8.846E-01	-2.768E-03 (6.1E-01)	-6.435E-04 (1.4E-01)
18	.850	-4.254E+00	-1.117E+00	2.087E-02 (5.7E-01)	5.479E-03 (1.5E-01)
19	.900	-3.411E+00	-1.004E+00	3.068E-02 (5.8E-01)	9.028E-03 (1.7E-01)
20	.950	-2.179E+00	-7.143E-01	2.282E-02 (5.6E-01)	7.483E-03 (1.8E-01)
21	1.000	-1.136E+00	-4.128E-01	3.417E-03 (5.0E-01)	1.241E-03 (1.8E-01)
22	1.050	-4.579E-01	-1.834E-01	-1.571E-02 (4.7E-01)	-6.292E-03 (1.9E-01)
23	1.100	-1.922E-02	-8.449E-03	-2.392E-02 (4.7E-01)	-1.051E-02 (2.1E-01)
24	1.150	3.979E-01	1.912E-01	-1.748E-02 (4.5E-01)	-8.397E-03 (2.2E-01)
25	1.200	9.215E-01	4.821E-01	-1.061E-03 (4.1E-01)	-5.550E-04 (2.2E-01)
26	1.250	1.509E+00	8.563E-01	1.541E-02 (3.9E-01)	8.747E-03 (2.2E-01)
27	1.300	1.983E+00	1.218E+00	2.260E-02 (3.9E-01)	1.387E-02 (2.4E-01)
28	1.350	2.152E+00	1.425E+00	1.689E-02 (3.8E-01)	1.118E-02 (2.5E-01)
29	1.400	1.919E+00	1.366E+00	2.088E-03 (3.5E-01)	1.487E-03 (2.5E-01)
30	1.450	1.344E+00	1.026E+00	-1.309E-02 (3.4E-01)	-1.000E-02 (2.6E-01)
31	1.500	6.137E-01	5.017E-01	-2.011E-02 (3.5E-01)	-1.644E-02 (2.8E-01)
32	1.550	-4.555E-02	-3.976E-02	-1.534E-02 (3.4E-01)	-1.339E-02 (2.9E-01)
33	1.600	-4.685E-01	-4.357E-01	-1.935E-03 (3.1E-01)	-1.799E-03 (2.9E-01)
34	1.650	-6.083E-01	-6.016E-01	1.219E-02 (3.0E-01)	1.206E-02 (3.0E-01)
35	1.700	-5.335E-01	-5.602E-01	1.893E-02 (3.0E-01)	1.987E-02 (3.2E-01)
36	1.750	-3.719E-01	-4.137E-01	1.448E-02 (2.9E-01)	1.611E-02 (3.3E-01)
37	1.800	-2.373E-01	-2.793E-01	1.425E-03 (2.8E-01)	1.677E-03 (3.3E-01)
38	1.850	-1.789E-01	-2.224E-01	-1.286E-02 (2.7E-01)	-1.599E-02 (3.4E-01)
39	1.900	-1.737E-01	-2.278E-01	-2.031E-02 (2.7E-01)	-2.664E-02 (3.6E-01)
40	1.950	-1.593E-01	-2.200E-01	-1.668E-02 (2.6E-01)	-2.304E-02 (3.7E-01)
41	2.000	-8.250E-02	-1.199E-01	-3.805E-03 (2.5E-01)	-5.530E-03 (3.6E-01)
42	2.050	6.423E-02	9.806E-02	1.134E-02 (2.4E-01)	1.732E-02 (3.7E-01)
43	2.100	2.384E-01	3.819E-01	2.047E-02 (2.4E-01)	3.280E-02 (3.9E-01)
44	2.150	3.727E-01	6.258E-01	1.851E-02 (2.4E-01)	3.109E-02 (4.0E-01)
45	2.200	4.136E-01	7.272E-01	6.722E-03 (2.3E-01)	1.182E-02 (4.0E-01)
46	2.250	3.510E-01	6.456E-01	-7.087E-03 (2.2E-01)	-1.303E-02 (4.1E-01)
47	2.300	2.234E-01	4.293E-01	-1.099E-02 (2.2E-01)	-2.112E-02 (4.3E-01)
48	2.350	9.800E-02	1.966E-01	7.336E-03 (2.2E-01)	1.472E-02 (4.3E-01)
49	2.400	3.948E-02	8.261E-02	5.743E-02 (2.1E-01)	1.202E-01 (4.3E-01)
50	2.450	8.275E-02	1.804E-01	1.446E-01 (2.0E-01)	3.154E-01 (4.5E-01)
51	2.500	2.240E-01	5.086E-01	2.703E-01 (2.0E-01)	6.136E-01 (4.6E-01)
52	2.550	4.306E-01	1.017E+00	4.326E-01 (2.0E-01)	1.022E+00 (4.7E-01)
53	2.600	6.623E-01	1.626E+00	6.274E-01 (1.9E-01)	1.541E+00 (4.7E-01)
54	2.650	8.892E-01	2.268E+00	8.470E-01 (1.9E-01)	2.161E+00 (4.8E-01)
55	2.700	1.100E+00	2.912E+00	1.079E+00 (1.9E-01)	2.857E+00 (5.0E-01)
56	2.750	1.294E+00	3.555E+00	1.306E+00 (1.8E-01)	3.587E+00 (5.1E-01)
57	2.800	1.473E+00	4.196E+00	1.507E+00 (1.8E-01)	4.291E+00 (5.0E-01)

H_2O at 200°C

	R	G1(R)	D1(R)	G2(R)		D2(R)	
58	2.850	1.629E+00	4.806E+00	1.661E+00	(1.8E-01)	4.901E+00	(5.2E-01)
59	2.900	1.741E+00	5.321E+00	1.754E+00	(1.8E-01)	5.358E+00	(5.4E-01)
60	2.950	1.793E+00	5.668E+00	1.780E+00	(1.7E-01)	5.628E+00	(5.3E-01)
61	3.000	1.774E+00	5.801E+00	1.748E+00	(1.6E-01)	5.715E+00	(5.4E-01)
62	3.050	1.696E+00	5.730E+00	1.674E+00	(1.6E-01)	5.657E+00	(5.5E-01)
63	3.100	1.584E+00	5.529E+00	1.580E+00	(1.6E-01)	5.516E+00	(5.7E-01)
64	3.150	1.470E+00	5.298E+00	1.485E+00	(1.6E-01)	5.354E+00	(5.8E-01)
65	3.200	1.379E+00	5.129E+00	1.402E+00	(1.6E-01)	5.217E+00	(5.8E-01)
66	3.250	1.317E+00	5.054E+00	1.334E+00	(1.5E-01)	5.120E+00	(5.9E-01)
67	3.300	1.276E+00	5.049E+00	1.277E+00	(1.5E-01)	5.053E+00	(6.1E-01)
68	3.350	1.238E+00	5.048E+00	1.224E+00	(1.5E-01)	4.990E+00	(6.1E-01)
69	3.400	1.189E+00	4.992E+00	1.169E+00	(1.5E-01)	4.908E+00	(6.1E-01)
70	3.450	1.125E+00	4.863E+00	1.112E+00	(1.5E-01)	4.806E+00	(6.3E-01)
71	3.500	1.056E+00	4.698E+00	1.057E+00	(1.4E-01)	4.703E+00	(6.4E-01)
72	3.550	9.987E-01	4.572E+00	1.011E+00	(1.4E-01)	4.631E+00	(6.5E-01)
73	3.600	9.671E-01	4.553E+00	9.826E-01	(1.4E-01)	4.626E+00	(6.6E-01)
74	3.650	9.651E-01	4.671E+00	9.730E-01	(1.4E-01)	4.709E+00	(6.7E-01)
75	3.700	9.853E-01	4.900E+00	9.807E-01	(1.4E-01)	4.878E+00	(6.9E-01)
76	3.750	1.014E+00	5.179E+00	9.996E-01	(1.3E-01)	5.107E+00	(6.8E-01)
77	3.800	1.036E+00	5.436E+00	1.021E+00	(1.3E-01)	5.357E+00	(6.9E-01)
78	3.850	1.045E+00	5.625E+00	1.037E+00	(1.3E-01)	5.585E+00	(7.1E-01)
79	3.900	1.038E+00	5.736E+00	1.042E+00	(1.3E-01)	5.757E+00	(7.3E-01)
80	3.950	1.022E+00	5.791E+00	1.033E+00	(1.3E-01)	5.856E+00	(7.2E-01)
81	4.000	1.001E+00	5.819E+00	1.012E+00	(1.3E-01)	5.885E+00	(7.3E-01)
82	4.050	9.804E-01	5.842E+00	9.844E-01	(1.3E-01)	5.866E+00	(7.5E-01)
83	4.100	9.613E-01	5.871E+00	9.557E-01	(1.2E-01)	5.836E+00	(7.6E-01)
84	4.150	9.443E-01	5.908E+00	9.328E-01	(1.2E-01)	5.837E+00	(7.6E-01)
85	4.200	9.306E-01	5.964E+00	9.206E-01	(1.2E-01)	5.900E+00	(7.6E-01)
86	4.250	9.228E-01	6.055E+00	9.204E-01	(1.2E-01)	6.040E+00	(7.8E-01)
87	4.300	9.230E-01	6.200E+00	9.297E-01	(1.2E-01)	6.245E+00	(8.0E-01)
88	4.350	9.308E-01	6.399E+00	9.424E-01	(1.2E-01)	6.478E+00	(8.0E-01)
89	4.400	9.419E-01	6.625E+00	9.517E-01	(1.1E-01)	6.694E+00	(8.1E-01)
90	4.450	9.498E-01	6.833E+00	9.525E-01	(1.1E-01)	6.852E+00	(8.2E-01)
91	4.500	9.490E-01	6.982E+00	9.438E-01	(1.1E-01)	6.943E+00	(8.4E-01)
92	4.550	9.388E-01	7.061E+00	9.297E-01	(1.1E-01)	6.992E+00	(8.3E-01)
93	4.600	9.244E-01	7.106E+00	9.177E-01	(1.1E-01)	7.054E+00	(8.4E-01)
94	4.650	9.152E-01	7.189E+00	9.154E-01	(1.1E-01)	7.191E+00	(8.5E-01)
95	4.700	9.197E-01	7.381E+00	9.269E-01	(1.1E-01)	7.439E+00	(8.6E-01)
96	4.750	9.403E-01	7.707E+00	9.504E-01	(1.1E-01)	7.791E+00	(8.7E-01)
97	4.800	9.711E-01	8.129E+00	9.785E-01	(1.1E-01)	8.190E+00	(8.8E-01)
98	4.850	1.000E+00	8.548E+00	1.001E+00	(1.0E-01)	8.553E+00	(8.9E-01)
99	4.900	1.015E+00	8.856E+00	1.009E+00	(1.0E-01)	8.803E+00	(8.9E-01)
100	4.950	1.009E+00	8.986E+00	1.001E+00	(1.0E-01)	8.908E+00	(9.0E-01)
101	5.000	9.856E-01	8.951E+00	9.795E-01	(1.0E-01)	8.896E+00	(9.1E-01)
102	5.050	9.550E-01	8.848E+00	9.549E-01	(1.0E-01)	8.847E+00	(9.3E-01)
103	5.100	9.319E-01	8.806E+00	9.374E-01	(9.9E-02)	8.858E+00	(9.3E-01)
104	5.150	9.264E-01	8.927E+00	9.337E-01	(9.7E-02)	8.997E+00	(9.3E-01)
105	5.200	9.400E-01	9.234E+00	9.443E-01	(9.7E-02)	9.276E+00	(9.5E-01)
106	5.250	9.648E-01	9.661E+00	9.632E-01	(9.7E-02)	9.645E+00	(9.7E-01)
107	5.300	9.886E-01	1.009E+01	9.818E-01	(9.5E-02)	1.002E+01	(9.7E-01)
108	5.350	1.001E+00	1.040E+01	9.923E-01	(9.4E-02)	1.032E+01	(9.8E-01)
109	5.400	9.976E-01	1.057E+01	9.923E-01	(9.4E-02)	1.051E+01	(9.9E-01)
110	5.450	9.847E-01	1.063E+01	9.847E-01	(9.3E-02)	1.063E+01	(1.0E+00)
111	5.500	9.721E-01	1.068E+01	9.768E-01	(9.3E-02)	1.073E+01	(1.0E+00)
112	5.550	9.697E-01	1.085E+01	9.756E-01	(9.0E-02)	1.092E+01	(1.0E+00)
113	5.600	9.815E-01	1.118E+01	9.847E-01	(8.9E-02)	1.122E+01	(1.0E+00)
114	5.650	1.004E+00	1.164E+01	1.002E+00	(9.0E-02)	1.163E+01	(1.0E+00)
115	5.700	1.028E+00	1.214E+01	1.023E+00	(8.9E-02)	1.207E+01	(1.0E+00)
116	5.750	1.044E+00	1.254E+01	1.039E+00	(8.7E-02)	1.247E+01	(1.0E+00)
117	5.800	1.047E+00	1.280E+01	1.044E+00	(8.7E-02)	1.276E+01	(1.1E+00)
118	5.850	1.038E+00	1.290E+01	1.039E+00	(8.7E-02)	1.292E+01	(1.1E+00)
119	5.900	1.022E+00	1.292E+01	1.027E+00	(8.5E-02)	1.299E+01	(1.1E+00)
120	5.950	1.007E+00	1.295E+01	1.013E+00	(8.5E-02)	1.303E+01	(1.1E+00)
121	6.000	9.991E-01	1.307E+01	1.002E+00	(8.5E-02)	1.311E+01	(1.1E+00)
122	6.050	9.990E-01	1.328E+01	9.981E-01	(8.3E-02)	1.327E+01	(1.1E+00)
123	6.100	1.003E+00	1.356E+01	9.998E-01	(8.3E-02)	1.352E+01	(1.1E+00)
124	6.150	1.008E+00	1.385E+01	1.005E+00	(8.2E-02)	1.380E+01	(1.1E+00)
125	6.200	1.010E+00	1.411E+01	1.009E+00	(8.1E-02)	1.410E+01	(1.1E+00)
126	6.250	1.009E+00	1.432E+01	1.012E+00	(8.1E-02)	1.436E+01	(1.1E+00)

H_2O at 200°C

	R	G1(R)	D1(R)	G2(R)		D2(R)	
127	6.300	1.008E+00	1.454E+01	1.013E+00	(8.0E-02)	1.461E+01	(1.2E+00)
128	6.350	1.009E+00	1.478E+01	1.014E+00	(7.9E-02)	1.485E+01	(1.2E+00)
129	6.400	1.014E+00	1.508E+01	1.015E+00	(7.9E-02)	1.511E+01	(1.2E+00)
130	6.450	1.020E+00	1.542E+01	1.018E+00	(7.9E-02)	1.539E+01	(1.2E+00)
131	6.500	1.025E+00	1.574E+01	1.021E+00	(7.7E-02)	1.568E+01	(1.2E+00)
132	6.550	1.027E+00	1.600E+01	1.023E+00	(7.6E-02)	1.595E+01	(1.2E+00)
133	6.600	1.023E+00	1.619E+01	1.022E+00	(7.6E-02)	1.618E+01	(1.2E+00)
134	6.650	1.016E+00	1.632E+01	1.018E+00	(7.7E-02)	1.636E+01	(1.2E+00)
135	6.700	1.008E+00	1.644E+01	1.012E+00	(7.5E-02)	1.650E+01	(1.2E+00)
136	6.750	1.002E+00	1.658E+01	1.004E+00	(7.4E-02)	1.662E+01	(1.2E+00)
137	6.800	9.973E-01	1.675E+01	9.968E-01	(7.4E-02)	1.675E+01	(1.2E+00)
138	6.850	9.946E-01	1.695E+01	9.910E-01	(7.4E-02)	1.689E+01	(1.3E+00)
139	6.900	9.919E-01	1.716E+01	9.869E-01	(7.3E-02)	1.707E+01	(1.3E+00)
140	6.950	9.884E-01	1.734E+01	9.846E-01	(7.1E-02)	1.728E+01	(1.3E+00)
141	7.000	9.849E-01	1.753E+01	9.841E-01	(7.3E-02)	1.752E+01	(1.3E+00)
142	7.050	9.836E-01	1.776E+01	9.856E-01	(7.2E-02)	1.780E+01	(1.3E+00)
143	7.100	9.862E-01	1.806E+01	9.894E-01	(7.1E-02)	1.812E+01	(1.3E+00)
144	7.150	9.932E-01	1.845E+01	9.952E-01	(7.0E-02)	1.848E+01	(1.3E+00)
145	7.200	1.003E+00	1.888E+01	1.002E+00	(7.1E-02)	1.887E+01	(1.3E+00)
146	7.250	1.011E+00	1.931E+01	1.008E+00	(7.0E-02)	1.925E+01	(1.3E+00)
147	7.300	1.016E+00	1.967E+01	1.012E+00	(6.9E-02)	1.959E+01	(1.3E+00)
148	7.350	1.015E+00	1.992E+01	1.013E+00	(6.8E-02)	1.987E+01	(1.3E+00)
149	7.400	1.010E+00	2.010E+01	1.011E+00	(6.8E-02)	2.011E+01	(1.4E+00)
150	7.450	1.005E+00	2.027E+01	1.008E+00	(6.8E-02)	2.033E+01	(1.4E+00)
151	7.500	1.002E+00	2.048E+01	1.007E+00	(6.7E-02)	2.057E+01	(1.4E+00)
152	7.550	1.003E+00	2.078E+01	1.006E+00	(6.7E-02)	2.084E+01	(1.4E+00)
153	7.600	1.007E+00	2.113E+01	1.007E+00	(6.6E-02)	2.114E+01	(1.4E+00)
154	7.650	1.010E+00	2.148E+01	1.008E+00	(6.7E-02)	2.143E+01	(1.4E+00)
155	7.700	1.010E+00	2.176E+01	1.007E+00	(6.5E-02)	2.170E+01	(1.4E+00)
156	7.750	1.005E+00	2.194E+01	1.004E+00	(6.5E-02)	2.191E+01	(1.4E+00)
157	7.800	9.974E-01	2.204E+01	9.988E-01	(6.6E-02)	2.208E+01	(1.5E+00)
158	7.850	9.896E-01	2.215E+01	9.933E-01	(6.4E-02)	2.224E+01	(1.4E+00)
159	7.900	9.852E-01	2.234E+01	9.894E-01	(6.4E-02)	2.243E+01	(1.5E+00)
160	7.950	9.855E-01	2.263E+01	9.881E-01	(6.2E-02)	2.269E+01	(1.4E+00)
161	8.000	9.893E-01	2.300E+01	9.892E-01	(6.4E-02)	2.300E+01	(1.5E+00)
162	8.050	9.934E-01	2.339E+01	9.911E-01	(6.2E-02)	2.333E+01	(1.5E+00)
163	8.100	9.949E-01	2.371E+01	9.919E-01	(6.2E-02)	2.364E+01	(1.5E+00)
164	8.150	9.926E-01	2.395E+01	9.909E-01	(6.2E-02)	2.391E+01	(1.5E+00)
165	8.200	9.881E-01	2.414E+01	9.886E-01	(6.2E-02)	2.415E+01	(1.5E+00)
166	8.250	9.849E-01	2.435E+01	9.872E-01	(6.2E-02)	2.441E+01	(1.5E+00)
167	8.300	9.863E-01	2.468E+01	9.887E-01	(6.0E-02)	2.474E+01	(1.5E+00)
168	8.350	9.931E-01	2.515E+01	9.940E-01	(6.1E-02)	2.518E+01	(1.5E+00)
169	8.400	1.003E+00	2.572E+01	1.002E+00	(5.9E-02)	2.568E+01	(1.5E+00)
170	8.450	1.013E+00	2.627E+01	1.009E+00	(6.1E-02)	2.618E+01	(1.6E+00)
171	8.500	1.016E+00	2.668E+01	1.013E+00	(5.9E-02)	2.659E+01	(1.5E+00)
172	8.550	1.012E+00	2.689E+01	1.010E+00	(5.9E-02)	2.683E+01	(1.6E+00)
173	8.600	1.002E+00	2.692E+01	1.002E+00	(5.9E-02)	2.692E+01	(1.6E+00)
174	8.650	9.893E-01	2.689E+01	9.908E-01	(5.8E-02)	2.693E+01	(1.6E+00)
175	8.700	9.796E-01	2.694E+01	9.812E-01	(5.9E-02)	2.698E+01	(1.6E+00)
176	8.750	9.767E-01	2.717E+01	9.770E-01	(5.6E-02)	2.718E+01	(1.6E+00)
177	8.800	9.813E-01	2.761E+01	9.799E-01	(5.8E-02)	2.757E+01	(1.6E+00)
178	8.850	9.909E-01	2.819E+01	9.883E-01	(5.5E-02)	2.812E+01	(1.6E+00)
179	8.900	1.001E+00	2.881E+01	9.988E-01	(5.8E-02)	2.874E+01	(1.7E+00)
180	8.950	1.008E+00	2.933E+01	1.007E+00	(5.5E-02)	2.931E+01	(1.6E+00)
181	9.000	1.010E+00	2.972E+01	1.011E+00	(5.7E-02)	2.978E+01	(1.7E+00)
182	9.050	1.007E+00	2.997E+01	1.010E+00	(5.5E-02)	3.004E+01	(1.6E+00)
183	9.100	1.003E+00	3.018E+01	1.005E+00	(5.6E-02)	3.025E+01	(1.7E+00)
184	9.150	9.999E-01	3.041E+01	1.001E+00	(5.5E-02)	3.044E+01	(1.7E+00)
185	9.200	9.994E-01	3.073E+01	9.988E-01	(5.5E-02)	3.071E+01	(1.7E+00)
186	9.250	1.001E+00	3.112E+01	9.998E-01	(5.5E-02)	3.108E+01	(1.7E+00)
187	9.300	1.004E+00	3.154E+01	1.003E+00	(5.3E-02)	3.151E+01	(1.7E+00)
188	9.350	1.005E+00	3.191E+01	1.006E+00	(5.6E-02)	3.194E+01	(1.8E+00)
189	9.400	1.004E+00	3.222E+01	1.006E+00	(5.3E-02)	3.230E+01	(1.7E+00)
190	9.450	1.001E+00	3.248E+01	1.004E+00	(5.4E-02)	3.258E+01	(1.8E+00)
191	9.500	9.979E-01	3.272E+01	1.000E+00	(5.2E-02)	3.280E+01	(1.7E+00)
192	9.550	9.959E-01	3.300E+01	9.965E-01	(5.3E-02)	3.302E+01	(1.8E+00)
193	9.600	9.958E-01	3.334E+01	9.946E-01	(5.2E-02)	3.330E+01	(1.7E+00)
194	9.650	9.973E-01	3.374E+01	9.953E-01	(5.3E-02)	3.367E+01	(1.8E+00)

H_2O at 200°C

	R	G1(R)	D1(R)	G2(R)		D2(R)	
195	9.700	9.994E-01	3.416E+01	9.979E-01	(5.1E-02)	3.411E+01	(1.8E+00)
196	9.750	1.001E+00	3.456E+01	1.001E+00	(5.2E-02)	3.456E+01	(1.8E+00)
197	9.800	1.001E+00	3.491E+01	1.002E+00	(5.0E-02)	3.497E+01	(1.8E+00)
198	9.850	9.993E-01	3.522E+01	1.002E+00	(5.2E-02)	3.530E+01	(1.8E+00)
199	9.900	9.978E-01	3.553E+01	9.993E-01	(5.0E-02)	3.558E+01	(1.8E+00)
200	9.950	9.970E-01	3.586E+01	9.968E-01	(5.1E-02)	3.585E+01	(1.8E+00)
201	10.000	9.976E-01	3.624E+01	9.958E-01	(5.0E-02)	3.618E+01	(1.8E+00)

INTEGRAL(G(R)-1) = -2.191596E+00
(G(R)-1)*R**2 = -3.328134E+00

H_2O at 200°C

4. DISCUSSION

4.1 Reduced Intensities. The reduced intensity functions for liquid water are shown in Fig. 3. There is interference throughout the observable range of the instrument, to $s_{max} = 16$, at room temperature. With increasing temperature, the oscillations are resolved only to smaller values of s. Also, the first two si(s) peaks merge completely at the higher temperatures. The meaning of this merging is made clear by Fig. 4, in which the Fourier transforms T(s) of the RDF D(r), defined by (3.2.2), are plotted for decreasing values of the upper integration limit r_m. It is clear from Fig. 4 that the double peak in the reduced intensity functions of Fig. 3 is produced by the longer range interactions in liquid water. The disappearance of this feature at temperatures $t > 100°C$ indicates, therefore, the progressive disappearance of long range (5-10 Å) order at these temperatures.

4.2 Radial Distribution Functions. The radial distribution functions D(r) for liquid water are shown in Fig. 5. There are deviations from a uniform distribution of distances out to 8 Å at room temperature. The first prominent maximum in the RDF, corresponding to nearest neighbor interactions, shifts gradually from 2.82 Å at 4°C to 2.94 Å at 200°C. From the area under this peak, a coordination number of 4.4 can be computed, which remains constant over the whole temperature range covered by our experiments. Maxima around 4.5 and 7 Å, corresponding to second and third neighbor interactions, are quite distinct at room temperature, but disappear gradually with increasing temperature. The curves for light and heavy water at 4°C are almost identical within experimental error. There is no significant difference in the arrangement of oxygen atoms at this temperature.

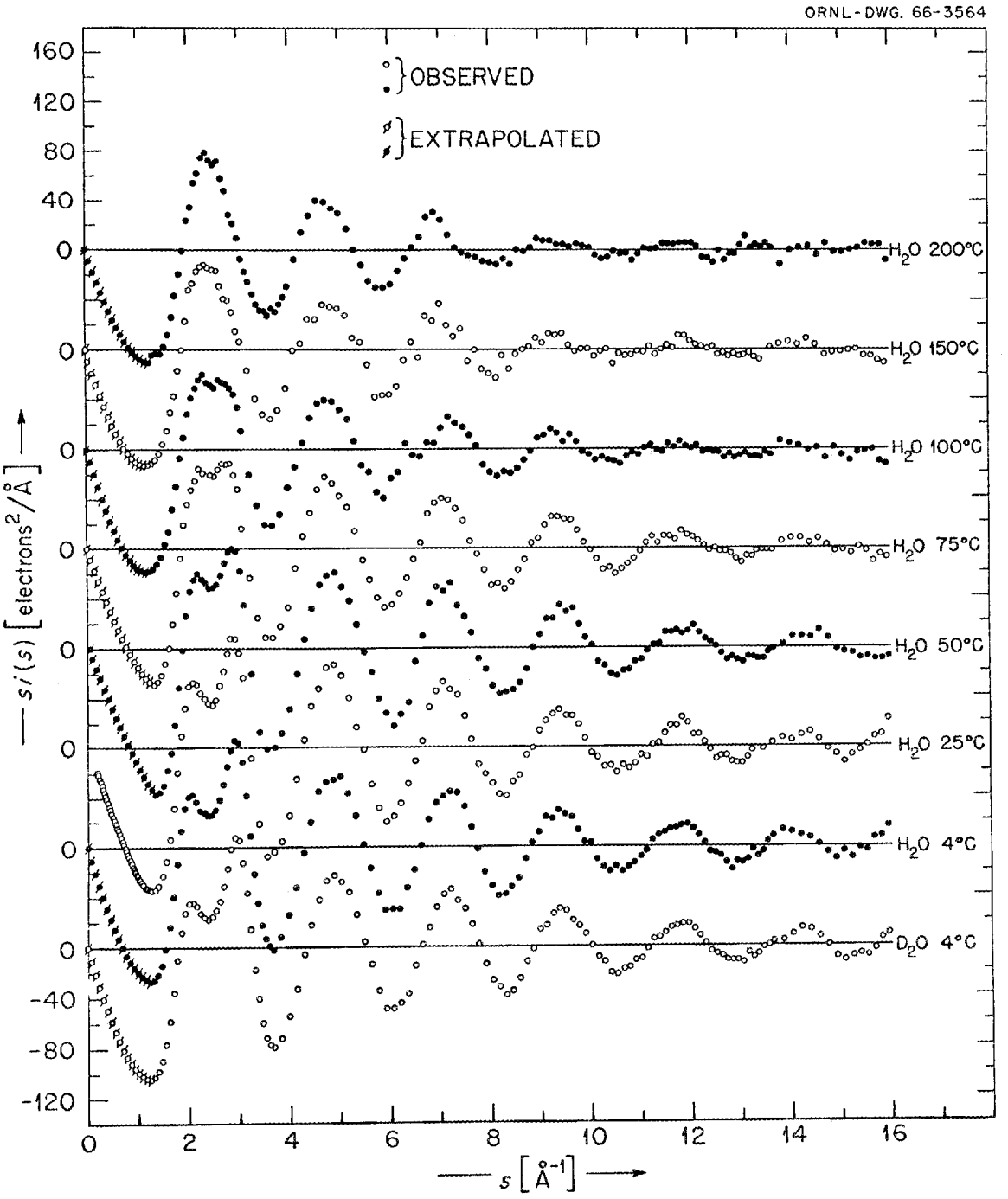

Fig. 3. Reduced Intensity Functions for Liquid Water.

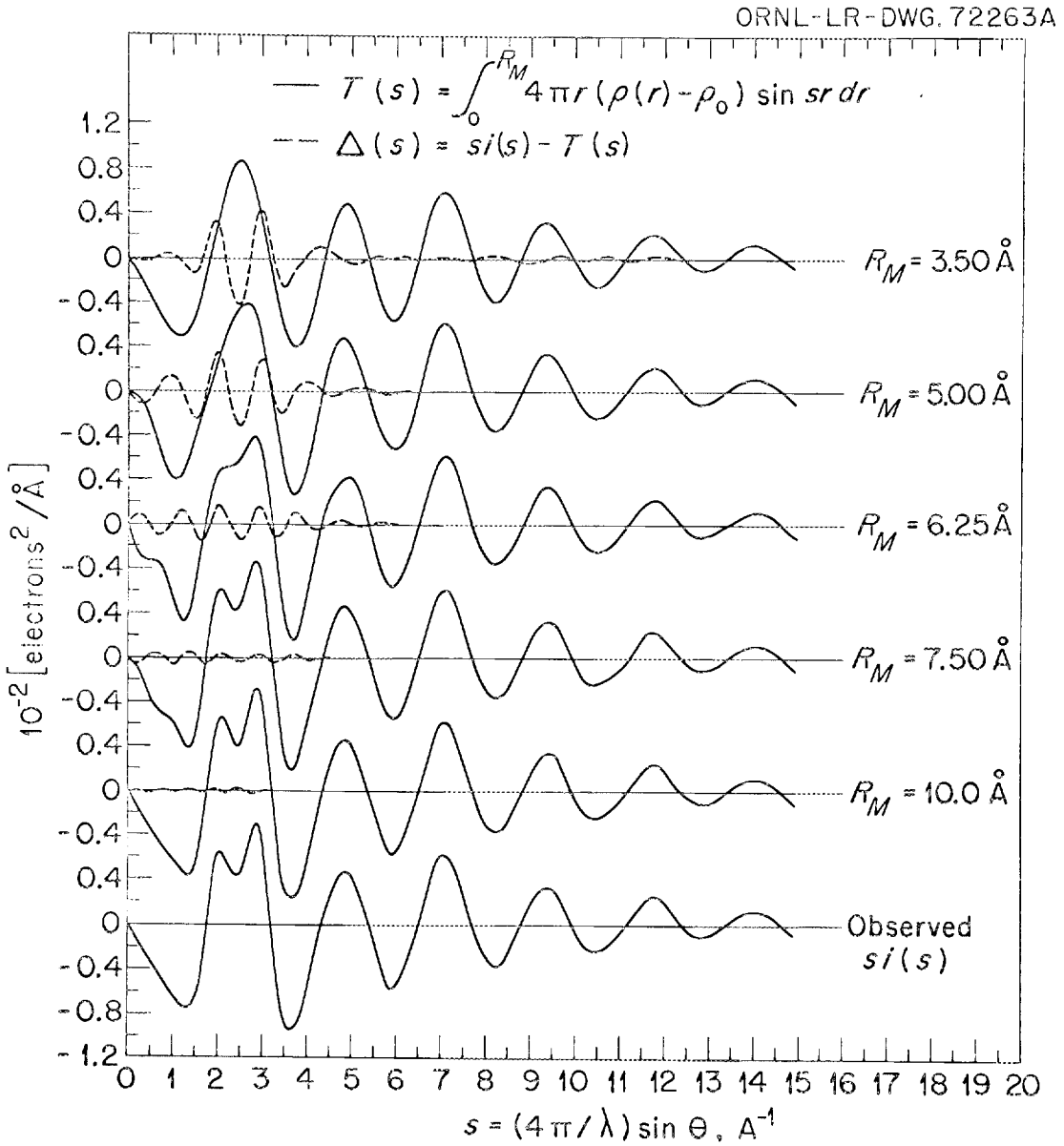

Fig. 4. Analysis of Reduced Intensity Function (H_2O 25°C). The solid curves show the Fourier transforms of increasing portions of the experimental radial distribution functions, to indicate the significance of various features of the reduced intensity curves.

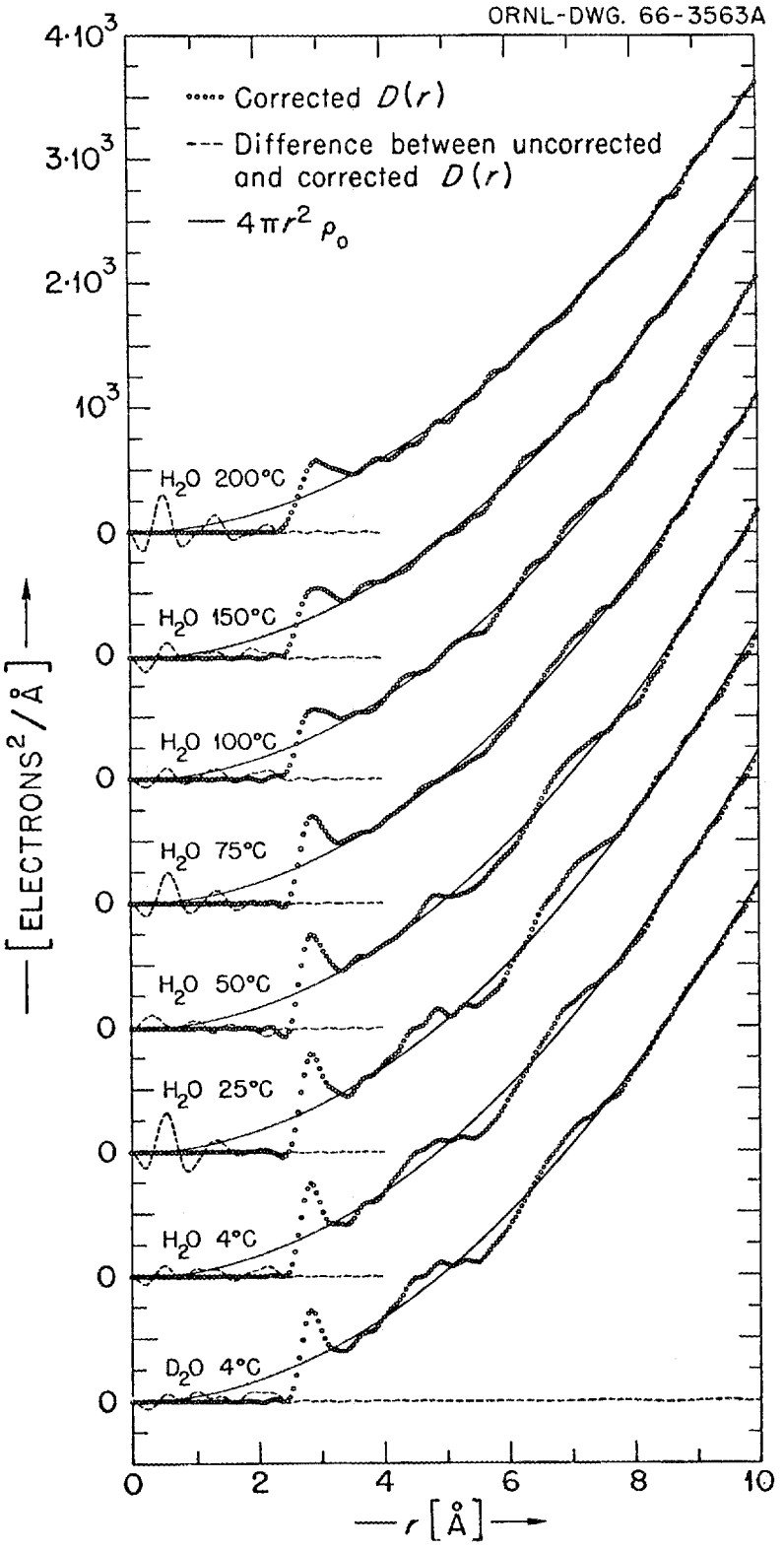

Fig. 5. Radial Distribution Functions for Liquid Water.

4.3 Comparison with Previous Work. As mentioned in section 1, all of the earlier diffraction studies of liquid water, with the exception of those of the Amsterdam group[9,10], have confirmed the results of Morgan and Warren[5]. It is therefore sufficient to discuss only these two studies. It is pertinent for this discussion, to consider the "cut-off" effect on the shape of the radial distribution function. A main problem in the inversion of diffraction data arises from the absence of experimental data for scattering angles greater than a limiting angle. If the integration in (3.2.2) is not extended over the whole range in which the integrand is different from zero, the resulting RDF shows certain spurious maxima and minima which may make its interpretation very laborious. Fig. 6 shows D(r) curves, computed from our water data for decreasing values of the upper integration limit in (3.2.2). While from $s_{max} = 16$ to $s_{max} = 14$ the changes in the RDF shape are negligible, they become significant for lower values of s_{max}. As expected, the resolution of RDF features, most pronounced in the region below 4 Å, becomes poorer with decreasing s_{max}. Also, the first RDF maximum shifts from 2.82 Å for $s_{max} = 16$ to 2.94 Å for $s_{max} = 8$, and to 3.20 Å for $s_{max} = 4$ (4°C).

Our results are in essential agreement with those of Morgan and Warren, whose data extended to an s_{max} of 12 at room temperature. Slight differences arise from the higher resolution of our work. The disagreement between Morgan and Warren's work and that of the Amsterdam group is thus confirmed. Fig. 6 shows clearly that an s_{max} of 8, as used in the Amsterdam work, yields radial distribution functions which, for water, show erroneous features in the region of short radial distances.

4.4 Conclusions. We have compared the experimental radial distribution functions with curves computed from proposed models of water structure;

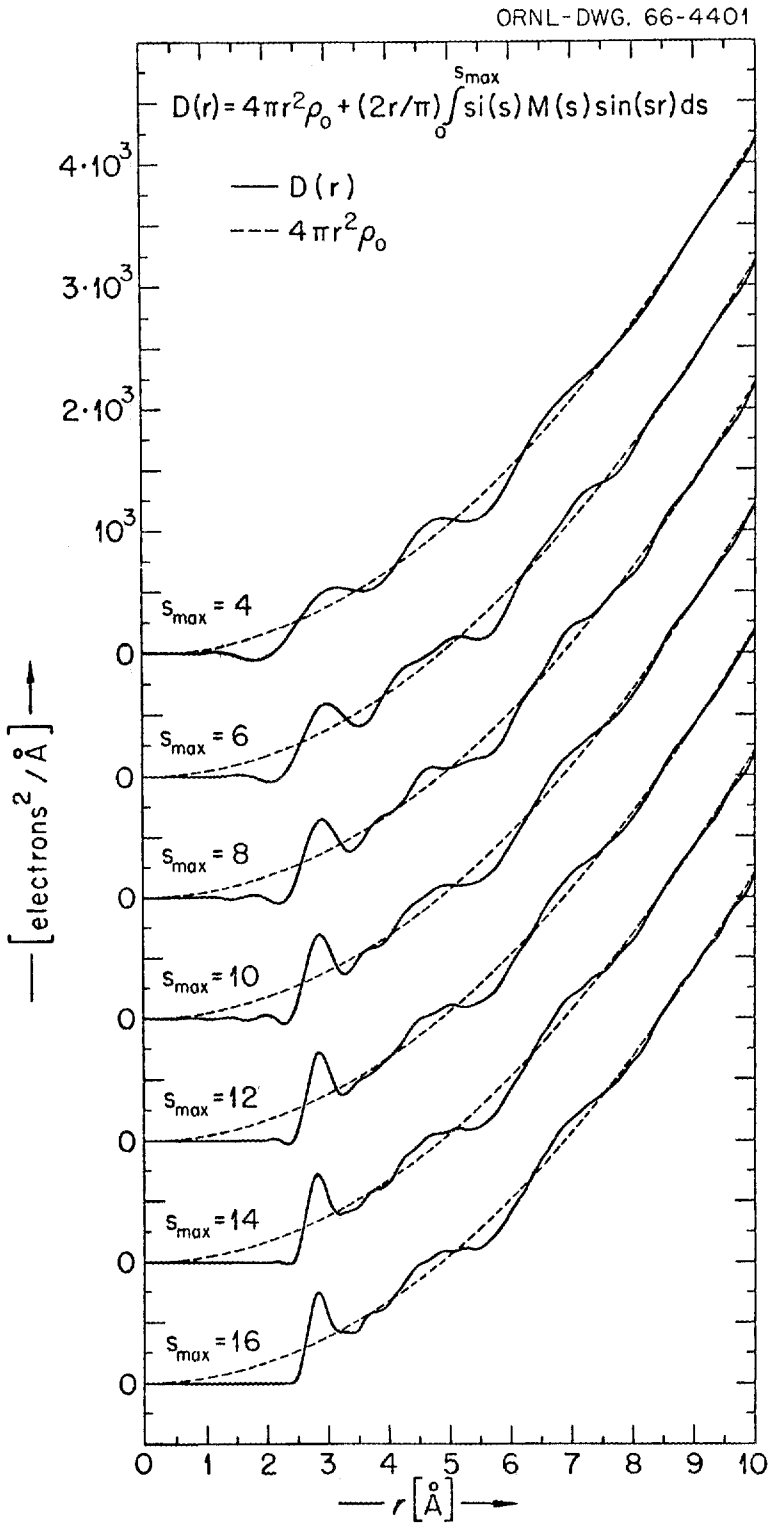

Fig. 6. Effect of Cut-Off on the Radial Distribution Function of Liquid Water (4°C).

this work will be presented elsewhere[14], and only a brief summary is given here.

Intensity functions were computed for a model based on an anisotropically expanded ice-I structure; occupancy of some of the large dodecahedral cavities which occur in this structure was permitted[18]. The model intensity functions are in agreement with the x-ray data over the whole range of scattering angles. Radial distribution functions obtained by Fourier inversion of the model intensity functions are in agreement with those derived from experiment to distances of 10 Å and beyond. The same model, with proper adjustment of nearest neighbor distances, the mean-square-displacements of these and longer range distances, and the degree of occupancy of cavities explains the x-ray data over the whole temperature range covered by our experiments.

Agreement of this model, with the diffraction data presented here is necessary but not in itself sufficient for proof of its reality. In similar manner, other proposed models of water which have a sufficiently detailed geometric basis to permit computation of radial distribution and intensity functions can be tested against the diffraction data, with agreement a necessary condition for the model to be tenable.

5. REFERENCES

1. H. H. Meyer, Ann. d. Physik, 5, 701 (1930).
2. G. W. Stewart, Phys. Rev., 37, 9 (1931).
3. E. Amaldi, Physik. Zeits., 32, 914 (1931).
4. S. Katzoff, J. Chem. Phys., 2, 841 (1934).
5. J. Morgan and B. E. Warren, J. Chem. Phys., 6, (1938).
6. L. Simons, Soc. Sci. Fennica, Commentationes Phys. Math., 10, No. 9 (1939).
7. C. Finbak and H. Viervoll, Tidsskr. Kjemi, Bergvesen Met., 3, 36 (1943).
8. G. W. Brady and W. J. Romanow, J. Chem. Phys., 32, 306 (1960).
9. C. L. van Panthaleon van Eck, H. Mendel, and W. Boog, Disc. Farad. Soc., 24, 200 (1957); Proc. Roy. Soc. (London), A 247, 472 (1958).
10. J. Heemskerk, Rec. T. C. Pays-Bas, 81, 904 (1962).
11. J. D. Bernal and R. H. Fowler, J. Chem. Phys., 1, 515 (1933).
12. H. A. Levy, M. D. Danford and A. H. Narten, Data collection and Evaluation With an X-ray Diffractometer Designed for the Study of Liquid Structure, ORNL-3960-A, May 5, 1966.
13. J. L. Kavanau, Water and Solute-Water Interactions, Holden-Day, San Francisco, 1964.
14. A. H. Narten, M. D. Danford and H. A. Levy, to be presented at the University of Exeter, England, April 11-13, 1967, and published in the Discussions of the Faraday Society.
15. International Tables for X-ray Crystallography, The Kynoch Press, Birmingham (England), 1959.
16. L. B. Smith and F. G. Keyes, Proc. Am. Acad. Arts Science, 69, 285 (1934).
17. J. Waser and V. Schomaker, Rev. Mod. Phys., 25, 671 (1953).
18. M. D. Danford and H. A. Levy, J. Am. Chem. Soc. 84, 3965 (1962).

ORNL-3997
UC-4 — Chemistry

INTERNAL DISTRIBUTION

1. Biology Library
2-4. Central Research Library
5. Reactor Division Library
6-7. ORNL — Y-12 Technical Library Document Reference Section
8-142. Laboratory Records Department
143. Laboratory Records, ORNL R.C.
144. H. Beutler
145. George Brunton
146. W. R. Busing
147. M. D. Danford
148. B. R. Fish
149. L. O. Gilpatrick
150. R. W. Hendricks
151. H. F. Holmes
152. J. S. Johnson
153. K. A. Kraus
154. C. E. Larson
155. H. A. Levy
156-157. S. Lindenbaum
158. H. G. MacPherson
159. D. L. McElroy
160. A. H. Narten
161. A. S. Quist
162. Linda L. Robinson
163. R. M. Rush
164. D. R. Sears
165. C. S. Shoup, Jr.
166. M. J. Skinner
167. G. P. Smith
168. B. Soldano
169. R. W. Stoughton
170. E. H. Taylor
171. A. M. Weinberg
172. H. L. Yakel
173. C. A. Hutchison (consultant)
174. J. J. Katz (consultant)
175. J. E. Meyer (consultant)
176. I. Perlman (consultant)
177. G. Scatchard (consultant)

EXTERNAL DISTRIBUTION

178. T. I. Taylor, Department of Chemistry, Columbia University, New York, New York
179. P. Lauger, Physikalisch-Chemisches Institut der Universitat, Klingelbergst. 80, Basel, Switzerland
180. P. A. Egelstaff, Solid State Physics Division, AERE, Harwell, Didcot, Berks., England
181. H. S. Frank, Mellon Institute, 4400 Fifth Avenue, Pittsburgh, Pennsylvania
182. G. W. Chantry, National Physics Laboratory, Teddington, Middlesex, England
183. J. B. Hasted, Department of Physics, University College, Gower Street, London WCI, England
184. K. E. Larsson, The Royal Institute of Technology, Stockholm, Sweden
185. G. W. Brady, Bell Telephone Laboratories, Inc., Murray Hill, N.J.
186. J. A. O'Malley, Chemistry Department, Drexel Institute of Technology, Philadelphia, Pennsylvania
187. J. A. Swartout, 270 Park Avenue, New York 17, New York
188. Research and Development Division, AEC, ORO
189-502. Given distribution as shown in TID-4500 under Chemistry category (75 copies — CFSTI)