CENTRAL RESEARCH LIBRARY
DOCUMENT COLLECTION

OAK RIDGE NATIONAL LABORATORY
operated by
UNION CARBIDE CORPORATION
NUCLEAR DIVISION
for the
U.S. ATOMIC ENERGY COMMISSION

OAK RIDGE NATIONAL LABORATORY LIBRARY
3 4456 0024860 3

ORNL-TM-1833

69

SUMMARY OF DESIGN AND TEST EXPERIENCE WITH CESIUM AND POTASSIUM COMPONENTS AND SYSTEMS FOR SPACE POWER PLANTS

H. C. Young
A. G. Grindell

OAK RIDGE NATIONAL LABORATORY
CENTRAL RESEARCH LIBRARY
DOCUMENT COLLECTION
LIBRARY LOAN COPY
DO NOT TRANSFER TO ANOTHER PERSON
If you wish someone else to see this document, send in name with document and the library will arrange a loan.
UCN-7969
(3 2-67)

NOTICE This document contains information of a preliminary nature and was prepared primarily for internal use at the Oak Ridge National Laboratory. It is subject to revision or correction and therefore does not represent a final report.

LEGAL NOTICE

This report was prepared as an account of Government sponsored work. Neither the United States, nor the Commission, nor any person acting on behalf of the Commission:

A. Makes any warranty or representation, expressed or implied, with respect to the accuracy, completeness, or usefulness of the information contained in this report, or that the use of any information, apparatus, method, or process disclosed in this report may not infringe privately owned rights; or

B. Assumes any liabilities with respect to the use of, or for damages resulting from the use of any information, apparatus, method, or process disclosed in this report.

As used in the above, "person acting on behalf of the Commission" includes any employee or contractor of the Commission, or employee of such contractor, to the extent that such employee or contractor of the Commission, or employee of such contractor prepares, disseminates, or provides access to, any information pursuant to his employment or contract with the Commission, or his employment with such contractor.

ORNL-TM-1833

Contract No. W-7405-eng-26

REACTOR DIVISION

SUMMARY OF DESIGN AND TEST EXPERIENCE WITH CESIUM AND POTASSIUM COMPONENTS AND SYSTEMS FOR SPACE POWER PLANTS

H. C. Young A. G. Grindell

JUNE 1967

OAK RIDGE NATIONAL LABORATORY
Oak Ridge, Tennessee
operated by
UNION CARBIDE CORPORATION
for the
U.S. ATOMIC ENERGY COMMISSION

OAK RIDGE NATIONAL LABORATORY LIBRARY

3 4456 0024860 3

CONTENTS

Page

ABSTRACT 1

INTRODUCTION 1

SUMMARY 2

RÉSUMÉS OF MAJOR STUDIES AND TESTS OF POTASSIUM SYSTEMS AND COMPONENTS

Aerojet-General Nucleonics 4

AiResearch Manufacturing Company 6

Allison Division of General Motors Corporation and United Nuclear Corporation 8

General Electric Space Power and Propulsion Section ... 8

Jet Propulsion Laboratory 10

National Aeronautics & Space Administration Lewis Research Center 11

Oak Ridge National Laboratory 12

Pratt and Whitney Aircraft Corporation (CANEL) 16

Rocketdyne Division of North American Aviation, Inc. .. 17

RÉSUMÉS OF MAJOR STUDIES AND TESTS OF CESIUM SYSTEMS AND COMPONENTS

Aerojet-General Nucleonics 18

Brookhaven National Laboratory 23

General Electric Space Power and Propulsion Section .. 24

National Aeronautics and Space Administration 26

Westinghouse Astronuclear Laboratory 30

POTASSIUM AND CESIUM BIBLIOGRAPHY

Potassium Bibliography

Proceeding of Conferences, Refs. 1 thru 14 39

Aerojet-General Nucleonics, Ref. 16 40

AiResearch Manufacturing Company, Refs. 17 thru 97 ... 40

CONTENTS (continued)

Page

Allison Division of General Motors Corporation and United Nuclear Company, Refs. 98 thru 102 47

General Electric Space Power and Propulsion Section, Refs. 103 thru 194 47

Jet Propulsion Laboratory, Refs. 195 thru 196 57

National Aeronautics and Space Administration, Refs. 197 thru 206 57

Oak Ridge National Laboratory, Refs. 207 thru 270 58

Pratt and Whitney Aircraft Corporation (CANEL) Refs. 271 thru 280 65

Rocketdyne Division of North American Aviation, Inc. Refs. 281 thru 289 66

Cesium Bibliography

Aerojet-General Nucleonics, Refs. 290 thru 297 67

Brookhaven National Laboratory, Ref. 298 68

General Electric Space Power and Propulsion Section, Ref. 299 68

National Aeronautics and Space Administration, Refs. 300 thru 305 68

Westinghouse Astronuclear Laboratory, Refs. 306 thru 309 69

Various Installations, Refs. 310 thru 314 70

SUMMARY OF DESIGN AND TEST EXPERIENCE WITH CESIUM AND POTASSIUM COMPONENTS AND SYSTEMS FOR SPACE POWER PLANTS

H. C. Young A. G. Grindell

ABSTRACT

The information available on the design and development of components for cesium and potassium vapor cycle systems for space power plants has been reviewed both by examining the literature available and by personal communication with personnel in the principal organizations engaged in this sort of work. An overall summary of the work that has been done is presented, together with a brief résumé of each of the principal design studies and test systems. All of the published literature that was found has been included in an appended bibliography to which frequent references are made in the text.

INTRODUCTION

The Oak Ridge National Laboratory has undertaken for the National Aeronautics and Space Administration an analytical comparison of cesium and potassium as working fluids for Rankine cycle space power plants. As part of the comparison (AEC Interagency Agreement 40-98-66, NASA Order W-12353), this report summarizes briefly the information reported on the design of components and systems for both cesium and potassium and presents somewhat more fully the operating and test experience with these components and systems.

The initial survey of the literature was made using Nuclear Science Abstracts and the Scientific and Technical Aerospace Reports for 1963 through 1966. In general, the latest reports that were abstracted in these journals were dated no later than 1965. Thus, information about progress during 1966 and the status of the technologies at the end of 1966 was obtained by direct contact with installations that were either active in or retained an interest in the work.

A listing of 1016 references for cesium and potassium was obtained from the Liquid Metal Information Center operated for the U.S. Atomic Energy Commission by Atomics International.

Personnel from Rocketdyne, AiResearch-Phoenix, and the Jet Propulsion Laboratory were contacted during the Turbine Erosion Meeting held at the Jet Propulsion Laboratory, December 29–30, 1966. Visits were made to General Electric, Evendale, Ohio, and Westinghouse Astronuclear Laboratory at Large, Pennsylvania, to discuss the work performed at these installations.

In view of the much greater amount of work that has been carried out with potassium than with cesium, an effort was made to include every piece of work that has been carried out on cesium, whereas relatively much less space was given to the fine structure of the work on potassium components and systems.

SUMMARY

A large amount of design and development work has been carried out on components and systems for potassium and cesium vapor cycles for space power plants (as can be seen from the bibliography at the end of this report). The greater part of this work has been on potassium systems. To facilitate use of the bibliography, the work on potassium systems is covered in the first portion, and the work on cesium systems is covered in the second portion. Also, to facilitate its use, the bibliography has been subdivided into sections on the basis of the source of the publication. References 1 through 14 list the proceedings of a number of conferences held since 1960 on liquid metal technology as applied to space Rankine cycle power systems. References 1 through 6 are from conferences sponsored by the AIAA or NASA on space power systems. References 7 through 10 are from joint NASA-AEC liquid metal corrosion meetings, and References 11 through 13 are from AEC sponsored heat transfer meetings. Reference 14 was the first joint NASA-AEC liquid metal technology meeting of a planned biennial series of specific subject items, in this case instrumentation, and also included a session on heat

transfer to present new developments in this field since the last conference, Ref. 13. Reference 15 is a technical review published every two months by Brookhaven National Laboratory and sponsored by the AEC. This review has been published since February 1963, and presents brief abstracts of all published reports on liquid metal technology.

References 16 through 289 list the reports published by nine contractors or government installations covering the contributions of each to the potassium technology. The contractors and government installations are arranged in alphabetical order.

References 290 through 314 are the publications found on work covering cesium component and system technology. The references given at the end of this report do not include those on work related to physical properties. The work on physical properties* and corrosion** is covered in companion reports.

A good indication of the background of experience available to designers of components for potassium and cesium vapor cycle systems is given by a summary of the operating experience in Table 1.

A review of the design studies indicates that there appear to be no important differences between potassium and cesium Rankine cycle systems other than those to be expected from differences in the physical properties of the two working fluids. These differences have relatively little effect on the design of the boiler, condenser, and radiator, but they do make it possible to effect substantial reductions in the size of the vapor manifolds and the turbine in the cesium system. The problems associated with these components are being investigated and will be covered in companion reports to be published later in this study.

A review of the operating experience with cesium and potassium systems indicates that there are no important differences in behavior between the two working fluids other than those associated with differences in their physical properties.

*H. W. Hoffman and T. T. Robin, Jr., A Summary of the Thermodynamic and Transport Properties of Cesium, USAEC Report ORNL-TM-1755, Oak Ridge National Laboratory (to be published).

**R. L. Klueh and D. H. Jansen, Effects of Liquid and Vapor Cesium on Structural Materials, USAEC Report ORNL-TM-1813, Oak Ridge National Laboratory (to be published).

RÉSUMÉS OF MAJOR STUDIES AND TESTS OF POTASSIUM SYSTEMS AND COMPONENTS

The more important design and development work on potassium components and systems is summarized in this section. Résumés are presented of the principal studies or tests of each of the organizations that has played an important role in the design and development work on potassium systems.

Table 1 lists these organizations and summarizes the hours of operation on various systems and components for both potassium and cesium. Subtotals for the boiling corrosion systems, component test boiling systems, and simulated Rankine cycle power plant systems, and the total operating time for all boiling systems are presented. The dimensions of all the components in the simulated systems were proportioned to provide operating characteristics and responses similar to those expected in the operation of a Rankine cycle space power plant, and this is the chief distinguishing feature between the simulated and the component test boiling systems. The total operating time for each component operated in these systems is also provided. Note that the total amount of system operating experience at each installation is smaller than the sum of the operating time concurrently for all of the components because two or more components were operated in each system. Similar information is provided for the all-liquid, bimetallic corrosion systems operated at Allison and United Nuclear. A considerable amount of reflux capsule corrosion test operation not presented in Table 1 is discussed in the résumé.

Aerojet General Nucleonics
(San Ramon, California)

Approximately 100 hr of forced convection boiling potassium test operation were completed in a Cb-1% Zr test loop.[16] This test loop was also used for boiling heat transfer tests with rubidium and cesium. For a brief description of the test loop and operating conditions see page 21.

Table 1. Summary of Operating Time With Potassium and Cesium Systems and Components at Temperatures above 1000°F up to March 1967 (Hours)

	Potassium Systems										Cesium Systems		
	AGN[a]	AiResearch[b]	Allison[c]	GE[d]	JPL[e]	NASA[f]	ORNL[g]	P&WA[h]	Rocketdyne[i]	UNC[j]	BNL[k]	AGN[l]	WA[m]
Corrosion test systems													
Boiling systems													
Thermal convection	--	--	--	10,500	--	--	43,600	12,000	--	--	--	--	420
Forced convection													
One loop	--	1,300	--	--	--	--	14,200	--	--	--	1,100	2,000	--
Two loops	--	--	--	5,000	--	--	5,000	--	--	--	--	--	--
Subtotal	--	1,300	--	15,500	--	--	62,800	12,000	--		1,100	2,000	420
All-liquid systems													
Thermal convection	--	--	--	--	--	--	--	--	--	100,000	--	--	--
Forced convection	--	--	53,000	--	--	--	--	--	--	3,000	--	--	--
Component test systems (boiling)													
One loop	100	5,000	--	11,900	--	--	2,800	3,600	200	--		2,500	--
Two loops	--	900	--	7,700	--	400	--	1,300	--	--	--	--	--
Three loops	--	--	--	--	--	600	--	--	--	--	--	--	--
Subtotal	100	5,900	--	19,600	--	1,000	2,800	4,900	200	--	--	2,500	--
Simulated power plant systems													
One loop	--	--	--	--	--	--	10,200	--	--	--	--	--	--
Two loops	--	--	--	--	~1,000	--	--	--	--	--	--	--	--
Subtotal	--	--	--	--	~1,000	--	10,200	--	--				
Total for all boiling systems	100	7,200	--	35,100	~1,000	1,000	75,800	16,900	200	--	1,100	4,500	420
Components--power plant													
Boilers													
<35 kw	--	1,300	--	15,500	1,000	--	71,400	16,900	--	--	--	--	--
>35 kw	100	5,900	--	19,600	--	1,000	4,400	--	200	--	1,100	4,500	420
Subtotal	100	7,200	--	35,100	1,000	1,000	75,800	16,900	200	--	1,100	4,500	420
Turbines													
With K lubricating bearings, <10 kw	--	3,000[n]	--	--	--	--	5,000[q]	--	100	--	--	--	--
With K lubricating bearings, >10 kw	--	50[o]	--	--	--	--	--	--	--	--	--	--	--
With oil lubricating bearings, >10 kw	--	--	--	5,100[p]	--	--	--	--	--	--	--	--	--
Boiler feed pumps													
Electromagnetic	100	7,200	--	24,600	3,600	1,000	26,900	4,900	200	3,000	1,100	4,500	--
Turbine-driven centrifugal	--	--	--	--	--	--	5,000[q]	--	--	--	--	--	--
Radiator	--	--	--	--	--	600	--	--	--	--	--	--	--
Condenser--to liquid metal loop	--	--	--	2,500	--	600	5,000	--	--	--	--	--	--
Condenser--air cooled	--	5,900	--	16,100	--	--	43,600	4,900	200	--	--	--	--
Condensing--radiator (combined)	100	1,300	--	16,500	~1,000	400	27,200	12,000	--	--	1,100	4,500	420
Subtotal	100	7,200	--	35,100	~1,000	1,600	75,800	16,900	200	--	1,100	4,500	420
Electrical generator										--	--	--	--
Operation in potassium vapor	--	--	--	--	--	--	--	--	--	--	--	--	--
External load device	--	50	--	--	--	--	--	--	--	--	--	--	--
Pumps in all-liquid systems	--	5,900	53,000	18,600	3,600	1,600	6,100	1,300	1,600	3,000	--	--	--
Potassium seals	--	3,050[n,o]	--	5,100[p]	--	--	--	--	--	--	--	--	--
Seal test	--	--	--	--300	--	--	--	--	--	--	--	--	--
Bearing test rig													
Instrumented	--	3,000[n]	--	--	--	--	--	--	1,600	--	--	--	--
Single bearing endurance test	--	300	--	--	--	--	4,500	--	--	--	--	--	--

[a]Aerojet-General Nucleonics, San Ramon, California.

[b]AiResearch Manufacturing Company, Phoenix and Los Angeles.

[c]Allison Division of General Motors, Indianapolis.

[d]General Electric Company, Cincinnati, Ohio.

[e]Jet Propulsion Laboratory, Cincinnati, Ohio.

[f]National Aeronautics and Space Administration, Cleveland, Ohio.

[g]Oak Ridge National Laboratory, Oak Ridge, Tennessee.

[h]Pratt and Whitney Aircraft (CANEL), Middletown, Connecticut.

[i]Rocketdyne, Canoga Park, California

[j]United Nuclear, White Plains, New York.

[k]Brookhaven National Laboratory, Upton, Long Island, New York.

[l]Aerojet-General Nucleonics, San Ramon, California.

[m]Westinghouse Astronuclear, Large, Pennsylvania

[n,o,p,q]The time shown for boiler feed pump, potassium seal, and test bearing was accumulated during operation of the turbine indicated in that column.

AiResearch Manufacturing Company
(Phoenix, Arizona, and Los Angeles)

AiResearch began analytical and experimental work with potassium Rankine cycle power conversion systems on the Space Power Unit, Reactor (SPUR) under Air Force contract in cooperation with the Atomic Energy Commission in May 1960. The objective of the SPUR Program was to provide 300 kw of electrical power from a nuclear reactor heat source using a boiling potassium Rankine cycle power conversion system. With AiResearch as the prime contractor, subcontracts were let to Aerojet-General Nucleonics for the reactor system, to Westinghouse Aerospace Electrical Division for the generator, and to Battelle Memorial Institute for materials support.

In 1963, the potassium technology was continued at AiResearch on the SNAP 50/SPUR Program, with the Atomic Energy Commission funding the existing Air Force contracts. The SNAP-50 and SPUR Rankine cycle systems are three-loop systems with heat transported from the reactor to the potassium boiler by a pumped liquid lithium loop, and waste heat transported from the potassium condenser to the radiator by a pumped NaK loop. At that time Pratt and Whitney (CANEL) was made prime contractor for the reactor, the lithium pump, and the potassium boiler feed pump. AiResearch was designated the prime contractor for the potassium power conversion system with the exception of the boiler feed pump.

During 1965, action was initiated by the Air Force and Atomic Energy Commission to redirect the effort from development of a specific space power system to a basic technology program. The program is currently inactive. It is understood that some negotiations are underway with NASA for further test operation of some existing potassium facilities at AiResearch. The areas covered by these programs are:

1. Materials
   a. Some 1300 hr of forced convection-corrosion tests in a Cb–1% Zr loop to 1900°F.[67]
   b. Evaluation of turbine rotor materials.
   c. Bearing material evaluation--some 63 friction wear tests were run in potassium.

2. Bearings
   a. 300 hr operation of a single journal bearing in potassium.[38]
   b. Over 3000 hr of tests were run on pivoted pad journal and thrust bearings at 24,000 rpm at 600°F in a potassium turbine-driven, instrumented, bearing test rig. This was a stainless steel system with a 135 kw electrically heated boiler and air-cooled condenser.

3. Turbine-Generator (Refs. 77, 84, 86, and 87)

   A total of 50 hr of operation was obtained with a single-stage potassium turbine coupled through a splined shaft to a 400 kva generator. The turbine was supported on pivoted pad bearings lubricated with potassium, and the generator had oil-mist-lubricated ball bearings. The homopolar generator, developed by AiResearch for use in military vehicles, has a design speed of 39,000 rpm. The test was conducted in a stainless steel system equipped with a 3000 kw gas-fired potassium boiler and an air-cooled condenser. The boiler was operated for an additional period of approximately 2000 hr, during which the turbine was simulated with a pressure drop across a valve.

4. Boiling Heat Transfer Tests (Refs. 66, 77, 86, and 87)
   a. A single-tube potassium boiler was operated for approximately 100 hr.
   b. A 12-tube, sodium-jacketed, Haynes-25 alloy boiler rated at 340 kw and 1600°F was operated for approximately 500 hr.
   c. A 19-tube boiler, having the same construction features as the 12-tube boiler, was operated for approximately 300 hr.

5. Turbine Erosion Test (Ref. 85)

   Several candidate materials for turbine buckets were tested in 1400°F potassium vapor. Test specimens rotating at 24,000 rpm normal to fluid jets were subjected to up to 10^8 impacts.

6. Condensers

   Workhorse air-cooled condensers were used in the above component test loops.

7. Radiators

Analysis and design work were completed--no unit was fabricated.[79]

Allison Division of General Motors Corporation (Indianapolis, Indiana)
United Nuclear Corporation (White Plains, New York)

Allison ran several all-liquid, potassium, bimetallic, forced-convection corrosion loops and subcontracted the operation of a large number of all-liquid, potassium, bimetallic, thermal convection loops to United Nuclear Corporation. The test loops were fabricated of stainless steel with Cb–1% Zr in the hot zone. The work was performed for the Atomic Energy Commission under the Military Compact Reactor (MCR) program. (Refs. 98 thru 102.)

The total accumulated operating time for these all-liquid corrosion loops is listed in Table 1. The program was terminated in 1965.

General Electric - Space Power and Propulsion Section
(Cincinnati, Ohio)

General Electric has been engaged in programs to develop the basic technology for materials and components for potassium Rankine cycle space power systems since 1960. These programs have been sponsored under a number of NASA and Air Force contracts. The general areas covered by these programs are:

1. Potassium Turbine Program (Refs. 103 thru 127)

   Two-stage test turbine, 19,000 rpm at 1600°F, shaft supported on oil-lubricated bearings, dynamic potassium shaft seal with separate pumped liquid potassium seal system. Total operating time 5100 hr.

   3000 kw gas-fired potassium boiler and air-cooled condenser in a type 316 stainless steel system for the above turbine. Total operating time 5400 hr.

2. Boiling and Condensing Heat Transfer Program (Refs. 128 thru 148)

   a. 100 kw system, Cb–1% Zr loop, radiant electrically heated boiler, condenser radiating to water-cooled walls of environmental chamber, one electromagnetic pump. Total operating time 6500 hr.

b. 300 kw system - two-fluid Haynes-25 system; sodium heated in gas-fired furnace transfers heat to the potassium boiler; condenser is air-cooled; two electromagnetic pumps. Total operating time 5200 hr.

c. 50 kw Condensing Facility - type 316 SS system, except that test condenser tube is nickel; electrically heated potassium pot boiler, test condenser cooled by all-liquid sodium loop that rejects heat to an air cooler; two electromagnetic pumps. Total operating time 2500 hr.

3. Potassium Corrosion Loop Program (Refs. 149 thru 170)

a. Refluxing capsule tests with refractory alloys. (Refs. 149 thru 159.) Total operating time ~ 50,000 hr.

b. Thermal convection, Cb–1% Zr loop. Total operating time 5,000 hr.

Thermal convection, Haynes-25 loop. Total operating time 5,500 hr.

c. Prototype Corrosion Loop (Ref. 164)

~ 10 kw Cb–1% Zr two-loop system, sodium electric-resistance heated once-through potassium boiler, potassium vapor flows through nozzles and fixed blades of turbine simulator, finned-tube potassium condenser radiates to walls of environmental chamber, two electromagnetic pumps used. Total operating time 5,000 hr.

4. Electromagnetic Pump Program (Refs. 171 thru 175)

Helical induction electromagnetic pumps in all test facilities have accumulated operating time of over 43,000 hr.

5. Bearing and Seal Program

a. Non-contacting fluid ring seal (Ref. 176)

Total operating time 300 hr.

b. Bearings

Evaluation of candidate materials in capsule tests and in friction and wear tests. (Refs. 177 thru 188.)

c. Instrumented water test rig. (Refs. 189 thru 194.)

Status of GE SPPS Potassium Program

A considerable portion of the potassium technology program work is continuing.

A three-stage turbine is to be operated in the existing 3000 kw turbine test facility.*

An advanced T-111 alloy boiler development test rig has been designed and fabrication has started. Heat will be transferred to the boiling potassium from a lithium primary loop.*

A potassium corrosion test loop is being fabricated of T-111 alloy, in which lithium will be electrically heated by direct resistance and transport heat to the potassium boiler. (Refs. 165 thru 170.)

A new test loop is being fabricated to test a light-weight helical induction pump having a T-111 alloy duct.*

Tests of tilting pad journal bearings lubricated with potassium will be run in an instrumented test rig. In-house funding will be used.

Jet Propulsion Laboratory
California Institute of Technology
(Pasadena, California)

The Jet Propulsion Laboratory recently operated a two-loop lithium-boiling potassium system to obtain experience with liquid metal Rankine cycle technology.[195, 196] The loop was constructed of Cb–1% Zr and was protected from oxidation with a helium blanket rather than vacuum.[195] The lithium was electric-resistance heated and pumped through the potassium boiler by means of a centrifugal pump. The boiler output was 30 kw with a 1900°F potassium vapor outlet temperature. A direct-type condenser having a design temperature of 1500°F was used. A single-stage turbine driven 1 kw alternator, manufactured by Aeronutronics Division of the Ford Motor Company, was installed in the potassium loop. The vertical-type lithium pump, manufactured by Byron-Jackson Division of Borg-Warner Corporation, employed a casing of Cb–1% Zr. The pump was designed to

*Work is being performed under NASA contract; limited distribution monthly progress reports are being issued to NASA in lieu of quarterly progress reports; topical reports will be issued.

operate at 2100°F and 2000 rpm to supply up to 10 gpm at 100-ft head. The pump was provided with a hydrostatic, lithium-lubricated bearing at the impeller end, and had a rotating face seal just below the motor cavity with inert gas pressure maintained on the lithium side of the face seal. The potassium boiler feed pump was a direct-current electromagnetic conduction type manufactured by Mine Safety Appliances Research Corporation. The pump operating conditions were 150 lb/hr flow at approximately 150 psi head at 1500°F.

The total accumulated operating time including a large amount of isothermal all-liquid operation was approximately 3600 hr. The system operated at full design boiling conditions for 210 hr. For the initial test operation, the turbine-alternator was bypassed, apparently owing to a malfunction of the turbine throttle valve. At approximately 100 hr of boiling operation, the preheater burned out during a restart after an electrical power failure. The system was repaired and restarted in January 1967, and the turbine-generator could not be started. The cause of this difficulty is currently being investigated.

National Aeronautics & Space Administration
Lewis Research Center
(Cleveland, Ohio)

NASA is performing experimental and analytical work with potassium systems at the Lewis Research Center to supplement the potassium Rankine cycle system technology development program being carried out under a number of NASA contracts. This work includes over 50,000 hr of corrosion tests with boiling potassium reflux capsules.[197]

Approximately 1000 hr of potassium condensing tests were conducted in a 150-kw, three-loop test facility.[198] In this system, NaK is electric-resistance heated in a pumped liquid loop and transfers heat to a Haynes-25 potassium boiler; heat is rejected from the potassium either to a NaK-cooled type 316 stainless steel test condenser, or to a finned tube, type 316 stainless steel test condenser radiating to the walls of the oil-cooled vacuum chamber. When the NaK-cooled condenser is in operation, heat is transported by the NaK either to an all-liquid radiator located inside the vacuum chamber or to an air cooler.

A 600 kw boiling sodium Cb–1% Zr test facility has also been operated some 900 hr with outlet temperatures up to 2000°F. It is understood that reports describing this work will be published within several months.

Experimental investigations were also conducted in a 150-kw flash boiler test facility to determine the nozzle expansion and flow characteristics of potassium vapor.[199]

The potassium analytical and test programs are continuing.

Several in-house studies were made of alkali metal vapor turbines. The effects of variations in turbine geometry and different mechanical and operating constraints on turbine efficiency and Rankine cycle efficiency were investigated systematically. The final reports of these studies are documented as Refs. 300 thru 305 and briefly discussed on pages 26 thru 30.

Oak Ridge National Laboratory

Work on potassium systems at ORNL stemmed from a study of various cycles and working fluids for nuclear electric space power plants which was carried out at ORNL in 1959 under the ANP program. The study indicated that a single-loop boiling potassium reactor system built of stainless steel would give a lower specific weight, smaller radiator, and higher reliability than any other system that appeared to be feasible.[207]

The initial experimental effort was directed at an investigation of the mass transfer and corrosion problems of boiling potassium in stainless steel systems at 1600°F. This consisted of tests with both reflux capsules and thermal convection and forced convection test loops. (Refs. 228 thru 233.) Concurrently, an experimental program was carried out to determine boiling heat transfer and burnout heat flux in single tube, electrically heated boilers. (Refs. 214 thru 227.) The stainless steel corrosion program was completed, and a similar investigation of boiling potassium in refractory metal systems is continuing as part of the High Temperature Materials Program. (Refs. 265 thru 270.)

Favorable results from the materials compatibility and boiling heat transfer tests, described above, led in 1961 to the initiation of a program to develop a boiling potassium reactor and the related system.[208]

A comprehensive development program was laid out with the primary emphasis directed toward the most difficult problems. The close similarity between the thermodynamic properties of water near room temperature and potassium at 1500°F led to a substantial amount of initial test work with water to develop jet pumps, free turbine-driven feed pumps, boilers, condensers, and vapor separators, using glass and Lucite parts to permit direct visual observation of two-phase flow phenomena.

Upon satisfactory completion of this work, three reduced-scale potassium systems designed to simulate a full-scale Rankine cycle power plant were fabricated of stainless steel with electrically heated boilers, and were operated with potassium to investigate system stability and control characteristics. (Refs. 249 thru 264.) Two of these systems, referred to as SPS-1 and SPS-2, had boilers of 28-kw design power, and the third, referred to as the IPS,[247] had a 364-kw boiler. Each system was equipped with an electromagnetic type boiler feed pump used for start-up and a free turbine-driven boiler feed pump. All three systems used the same basic design of tapered-tube condenser radiating to either an air-cooled or a water-cooled heat sink. Development of a turbine-generator was not included in the program. The turbine-generator was simulated in each of the three systems by a pressure drop in a line which was operated in parallel with the turbine-driven feed pump.

In addition, several helical induction and rotating magnet electromagnetic pumps and a jet pump were operated in all-liquid potassium test loops to obtain their performance characteristics, and another all-liquid loop was used to calibrate electromagnetic flowmeters.

The Atomic Energy Commission drastically reduced the funding of MPRE development work for Fiscal-1967. As a result, operation of the IPS was terminated, and the loop is in standby condition. Some funding was made available to obtain data on burnout heat-flux for potassium in the SPS-1 and to operate the SPS-2 on a steady-state endurance test. Operation of forced-convection, refractory-metal boiling potassium corrosion tests under the High Temperature Materials Program is continuing.

The potassium technology programs at ORNL are briefly summarized below:

1. Boiling Potassium Corrosion Tests
   a. Refluxing capsule tests with refractory alloys[230]
      Total operating time 65,000 hr.
      Refluxing capsule tests--stainless steel
      Total operating time 4,000 hr.
   b. Thermal convection--Cb-1% Zr loops
      Total operating time 14,200 hr.
      Thermal convection--stainless steel and Haynes-25 loops[228]
      Total operating time 29,400 hr.
   c. Forced Convection Corrosion Loops
      ~ 10-kw stainless steel--one loop systems
      (Refs. 249 thru 270.) Total operating time 14,200 hr.
      Electrically heated boiler, air-cooled condenser, one electromagnetic pump, potassium vapor flows through nozzles, and fixed blades of turbine simulator.
      Test loops in two test stands.
      ~ 10-kw Refractory Alloy--two loop system
      (Refs. 230, 233, and 265 thru 270.)
      Total operating time 5,000 hr.
      Electrically heated boiler, potassium vapor flows thru nozzles, and fixed blades of turbine simulator, NaK cooled condenser, NaK rejects heat to air-cooled radiator outside of environmental chamber, two electromagnetic pumps. Test loops in two vacuum tanks.
2. Boiling Heat Transfer and Burnout Limit (Refs. 214 thru 227)
   Electrically heated single tube 316 stainless steel boiler, air-cooled condenser, one electromagnetic pump.
   Total operating time 2,800 hr.
3. Test of electric heater rods and nucleation devices in boiling potassium, stainless steel capsules 2-in.-diam and 48-in. long, test heater at bottom and refluxing condenser at top.
   Total operating time 85,000 hr.

4. Rankine Cycle Test Loops

   a. Intermediate Potassium System, IPS[247]
   364-kw stainless steel system, electrically heated boiler, near horizontal tapered tube condenser radiating to air-cooled surface, one electromagnetic pump and one Aeronutronic MK-1 free turbine driven feed pump. Total operating time on system was 4,400 hr; total operating time on turbine pumps was 3,600 hr.

   b. Small Potassium System No. 1, SPS-1 (Refs. 249 thru 264)
   28-kw all stainless steel system, electrically heated boiler near horizontal tapered tube condenser, radiating to air-cooled surface; one electromagnetic pump and one ORNL free turbine driven feed pump.
   Total operating time on system was 4,700 hr; total operating time on several turbine pumps was 540 hr.

   c. Small Potassium System No. 2, SPS-2 (Refs. 249 thru 264)
   28-kw all stainless steel system, similar to SPS-1, except condenser is vertical and radiates to water-cooled surfaces, and major portion of system is enclosed in furnace to minimize trace heated piping. One electromagnetic pump and one Aeronutronic MK-2 free turbine driven feed pump. Total operating time on system was 1100 hr; total operating time on turbine pump 900 hr. Turbine pump performed boiler feed duty for 300 hr.

5. All Liquid Test Loops

   a. Electromagnetic pump test loops[237]
   Stainless steel and refractory metal pump cells; flows to 1/2 gpm and pressure rise to 300 psi to 1500°F. Total operating time 5,600 hr.

   b. Jet pump test loop[264]
   Total operating time 500 hr.

6. Single Bearing Endurance Test (Refs. 251 and 252)
   Total operating time 4,500 hr.

Pratt and Whitney Aircraft (CANEL)

Pratt and Whitney Aircraft, having attained a considerable background in liquid metal technology during work on both the Aircraft Nuclear Propulsion Program (ANP) and the Lithium Cooled Reactor Experiment (LCRE), started work on the SNAP-50 program at the CANEL facility (Connecticut, Advanced Nuclear Engineering Laboratory) in May 1962. In 1963, under the combined SNAP-50/SPUR program, CANEL was given responsibility for the lithium cooled reactor system, the lithium pump, the potassium boiler feed pump, and the condenser coolant pump which circulates NaK. All work on this program was terminated as of July 1965.

The lithium, potassium, and NaK pumps were to be canned-rotor centrifugal pumps with liquid metal lubricated bearings; and the design concepts of all three were basically the same.[271] Design and development of the lithium pump was started first. Three journal bearings were tested in lithium for 2100, 110, and over 9200 hr, respectively, at 625°F and up to 8000 rpm. No bearing tests in potassium were reported. A cavitation endurance test on an impeller, originally designed for NaK application, was operated in potassium at 1400°F for 350 hr in a cavitation endurance test under a NASA contract.[272]

Other potassium technology at CANEL included corrosion studies of refractory metals in four thermal convection loops for a total of 12,000 hr.[276]

Forced-convection boiling potassium heat-transfer tests were conducted in a serpentine boiler designed for zero-gravity operation. It consisted of a single, 0.186-in. ID, Haynes 25 tube with a flow rate of 25 lb/hr at up to 1725°F, and was operated for 3625 hr. The potassium was heated by condensing sodium on the outside of the boiler tube; an electromagnetic pump and air-cooled condenser were used.[274] Two stainless steel two-liquid forced-convection boiling potassium loops were operated at flow rates to 30 lb/hr and 1600°F for a total of 1292 hr. Heat was transferred to the single tube potassium boiler from a liquid sodium loop. The system included two electromagnetic pumps and an air-cooled condenser.[275]

Rocketdyne--A Division of North American Aviation, Inc.
(Canoga Park, California)

Rocketdyne has completed several potassium-lubricated bearing experiments under Air Force contracts since 1962. (Refs. 281 thru 286.) Three bearing test rigs were operated with potassium lubricated test bearings.[287, 288] All three test rigs used an argon turbine to drive the test shaft and an electromagnetic pump to supply potassium to the bearings. A full-scale configuration simulating the inertias and support bearings of a complete turbine-generator was installed in the Simulated System Test Rig (SSTR), where it was operated with the shaft at several attitudes from vertical to horizontal. The two General Purpose Test Rigs (GPTR) were used to test individual bearings to 1200°F and 36,000 rpm. One test bearing was operated for 710 hr at 950°F and 28,000 rpm. The following types of bearing have been operated with potassium lubricant in the GPTR for a total accumulated time of 1600 hr.

Journal Bearing		Thrust Bearing
3 pad	900°F	Plain
Tilting pad	400°F	Spiral groove
3 section	600°F	
Tilting pad	1200°F	

A 200-kw stainless steel mock-up of a potassium Rankine cycle was fabricated with in-house funds, and a single-stage turbine wheel supported on potassium-lubricated, hybrid journal bearings and a hydrostatic thrust bearing was operated in it for approximately 100 hr.[288] Turbine shaft power was absorbed by the impingement of two liquid potassium jets on the blades of a Terry pump. The pool-type boiler was heated with electrical Glo-bar heaters. Total boiling time was approximately 200 hr.

The work discussed above has been completed. Rocketdyne is currently investigating turbine bucket erosion using steam as the working fluid under a NASA contract.[289]

RÉSUMÉS OF MAJOR STUDIES AND TESTS OF CESIUM SYSTEMS AND COMPONENTS

All available design and development work on cesium components and systems is summarized in this section. Résumeś are presented of the principal studies and tests of each of the organizations engaged in the cesium work. Table 1 lists these organizations and summarizes the hours of operation on various systems and components.

Table 2 gives a brief scope of the area of activity for each of these organizations, while the sections below present the résumeś.

Résumé of Work Reported in Individual References

References 290, 291--Boiling Cesium Corrosion Test Loop (Aerojet-General Nucleonics)

Loop Operating Conditions:

Boiler exit temperature, °F	1850
Boiler pressure, psig	145
Vapor quality, %	10
Power: to preheater, kw	6.3
to boiler, kw	9.6
Condensing temperature, °F	1850
Condenser exit temperature, °F	740
Cesium flow rate, lb/hr	693
Pump pressure rise, psi	5

Loop Description. (Ref. 291 describes test loop.) The loop, fabricated of Cb–1% Zr, was enclosed in an argon chamber for protection against external oxidation. The boiler tube was electrically resistance heated. Heat was removed from the condenser by blowing the argon in the protective atmosphere across the condenser and then extracting the heat in a water cooler. The electromagnetic feed pump and flowmeter were supplied by MSA Research Corporation. The E-M pump consisted of a specially shaped Cb–1% Zr tube to which nickel bus bars were brazed. Loop pressure was maintained by means of argon cover gas in a storage tank connected to the liquid leg.

Table 2. Organizations Concerned with Cesium Technology

Firm	Contracting Agency	Reference Number	Area of Activity
A. Aerojet-General Nucleonics San Ramon, California	AEC	290, 291	Boiling cesium corrosion loop.
	AEC	292, 293	Cesium test loop to obtain boiling heat transfer and pressure drop data.
	AEC	294	Cesium test loop to obtain condensing heat transfer data.
	AEC	295, 296, 297	Measurement of thermodynamic and transport properties of rubidium and cesium.
B. Brookhaven National Laboratory Upton, New York	AEC	298	Cesium vapor impingement on simulated turbine blades.
C. General Electric Space Power & Propulsion Section Cincinnati, Ohio	---	299	Preliminary in-house design study. In-house report.
D. National Aeronutronics and Space Administration--Lewis Laboratory Cleveland, Ohio	---	300 thru 305	A series of analytical studies on liquid metal turbines has been published; includes cesium.
E. Westinghouse Astronuclear Lab. Pittsburgh, Pennsylvania	NASA	306, 307, 308, 309	Design study of pumps, turbines, boilers, condensers, and radiators for comparison of cesium and potassium Rankine cycle space power plants. The study was based on an assumed higher allowable turbine inlet temperature for cesium, and concluded that the cesium system would be lighter and more reliable and recommended further consideration of cesium.
F. AiResearch Manufacturing Company Phoenix, Arizona	---	---	In-house design studies only. No published reports on cesium.
G. Battelle Memorial Institute	NASA	310	Measurement of thermophysical properties.
H. Mechanical Technology, Inc. Latham, New York	---	---	Preliminary investigation. No reports issued--concluded use of cesium for Rankine cycle vs potassium should be studied further.
I. Mine Safety Appliances Research Corporation Evans City, Pennsylvania	AF	311	Measurement of thermophysical and transport properties.
J. Oak Ridge National Laboratory Oak Ridge, Tennessee	---	---	Preliminary investigation. No reports published.
K. Pratt & Whitney Aircraft East Hartford, Connecticut	AEC	312	Measurement of electrical resistivity of cesium only.
L. Rocketdyne--Division of North American Aviation, Inc. Canoga Park, California	---	---	Conceptual design of turbines and bearings. No published reports on cesium.
M. Southwest Research Institute	AF	313	Measurement of thermophysical properties.
N. U.S. Naval Research Laboratory	---	314	Measurement of thermophysical properties.

Test Results. The loop operated for a total of 2014 hr. The results of the metallurgical examination for corrosion and mass transfer are reported.[290]

Operating Difficulties. Typical loop operating problems included failure of a bearing in the argon blower, malfunction of the actuator on one liquid metal valve, a leak across the seat of another liquid metal valve, and malfunction of a liquid level indicator.

Reference 292--Forced Convection Boiling of Rubidium and Cesium (Aerojet-General Nucleonics)

Loop Operating Conditions:

Saturation temperature, °F	1400 to 1800
Flow rate, lb/hr	50 to 375
Heat flux, Btu/hr ft^2	0 to 325,000
Inlet subcooling, °F	0 to 200
Inside diam of test section, in.	0.277

Loop Description. The Cb–1% Zr test loop was enclosed in an argon-filled environmental chamber, 5 × 7 × 6 ft high. The boiler section consisted of a continuous smooth round tube, electrically heated by four individually controlled heater sections. Each heater section utilized a wound tantalum tape insulated from the boiler tube by plasma sprayed alumina coating on the boiler tube. Heat was removed from the 1/2-in. OD × 20 ft condenser coil by forcing argon gas through an annulus surrounding the condenser tube.

Two MSA Research Corporation Style IV electromagnetic pumps were used as feed pumps. The pumps were arranged in series with an intercooler between them to limit the maximum temperature of the pump cell to 1500°F. The intercooler consisted of three sections in series. In each section a nickel cylinder was brazed to the loop tubing and a nickel tube was brazed to each cylinder. Cooling water could be circulated through the outer tubes.

Qualitative cesium flow measurement was made with a standard electromagnetic flowmeter, while precision measurement was made with a calorimetric flow meter where a known thermal energy was extracted

from the liquid metal and the flow rate calculated.

The preheater was electric-resistance heated. A flow restrictor was located before the preheater to reduce flow instabilities. This restriction was sized to produce a pressure drop equal to that produced in the boiler test section at maximum design flow rate and quality. The loop pressure was maintained by argon cover gas in a stainless steel storage tank connected to the liquid leg.

Test Results. Eighty-one test runs were made with cesium; total operating time was 2100 hr. Stable pressure and flow conditions were achieved in all test runs.

Operating Difficulties. A hot spot in the preheater caused instability when the amount of subcooling was less than 200°F; the electromagnetic pumps produced only 60% of the rated pressure rise; both the diaphragm and capillary sections of the pressure measuring devices were temperature-sensitive.

Reference 293--Forced Convection Swirl-Flow Boiling of Cesium (Aerojet-General Nucleonics)

Loop Operating Conditions:

Saturation temperature, °F	1400 to 1800
Flow rate, lb/hr	50 to 375
Heat flux, Btu/hr ft^2	0 to 325,000
Inlet subcooling, °F	0 to 200
Inside diam of test section, in.	0.277

Loop Description. The Cb–1% Zr test loop was the same as used for boiling of cesium in a smooth round tube,[292] except that twisted ribbon inserts were added to the boiler section to promote swirl flow. The boiler section was heated in the same manner as described in Ref. 292. The pressure at the inlet and outlet of the test section was measured with stainless steel Bourdon tube pressure gages connected directly to the loop.

Test Results. The total operating time was approximately 100 hr. The nucleate boiling results for swirl flow indicate a significant increase in heat transfer over that for axial flow through a smooth

round tube. Curves of critical heat flux versus quality are given for both swirl and axial flow for rubidium, cesium, and potassium to 1800°F. The general conclusion was that rubidium and cesium should not be eliminated from consideration as Rankine cycle working fluids because of any unexpected thermal or hydraulic performance parameters.

Operating Difficulties. A fixed restriction in the boiler feed line reduced flow instabilities at high flow rates; at low flow rates, where the pressure drop across the restrictor was small compared to the pressure generated in the boiler, the flow instabilities were large. Large flow rate pulsations occurred when the boiler sub-cooling was less than 150°F.

Reference 294--Forced Convection Condensing Heat Transfer for Rubidium and Cesium
(Aerojet-General Nucleonics)

Loop Operating Conditions:

Saturation temperature, °F	1000	to 1400
Mass flow rate, lb/hr ft^2	20,000	to 80,000
Weight flow, lb/hr	17	to 70
Heat flux, Btu/hr ft^2	0	to 100,000
Flow passage, ID, in.	0.402	
Orientation	Vertical and horizontal	

Loop Description. All wetted parts of the test loop, except the test condenser, were type 316 stainless steel. The boiler consisted of a single tube surrounded by a NaK jacket. Four sheathed electrical heaters, immersed in the NaK, supplied power to the boiler. A dryer-superheater section, made of 60 ft of 1/2-in. OD tubing, electric-resistance heated, was located at the boiler outlet. The boiler feed pump was an MSA Research Corporation Style IV electromagnetic pump with nickel bus bars brazed to a stainless steel pump cell. The test loop also contained a water-cooled subcooler, flow control valves, a magnetic flow meter, and a calorimetric flow meter.

The test condenser consisted of two 3-in.-diam X 0.402-in. ID nickel bars each 8-in. long, connected in series, and separated by a distance of 2-in. Heat was rejected from the condenser test section OD

to air flowing in an annulus surrounding the nickel bars, and in turn, to a water jacket surrounding the air jacket. Eight thermocouples were brazed into axial holes in each nickel bar. Test section pressures were measured by Bourdon tube pressure gages connected directly to the system.

Test Results. Condensing tests were completed for both rubidium and cesium with the condenser in the vertical position. The condensing test data are presented in both tabular and graphic form. For the operating conditions listed, the data indicate that condensing heat transfer coefficients over 20,000 Btu/hr ft^2 °F can be expected. The total operating time with cesium was approximately 360 hr.

Operating Difficulties. A small leak occurred at a brazed collar on the subcooler during rubidium tests with the condenser horizontal. The leak was small, and tests were completed at above atmospheric pressures. The leak was repaired, and during subsequent horizontal testing with cesium, a leak developed between the two nickel condenser sections. Data taken prior to this leak are presented in the report.

Reference 298--High Velocity Impingement of Cesium Vapor on Stationary Simulated Turbine Blades
(Brookhaven National Laboratory)

Loop Operating Conditions:

Boiler out temperature, °F	1730
Condensing temperature, °F	1170
Flow rate, lb/hr	90
Vapor velocity at exit of test nozzles, ft/sec	~800
Operating time, hr	1096

Loop Description. The test loop was an all Cb–1% Zr forced convection boiling cesium system. The loop was contained in a vacuum chamber operated at 10^{-8} torr. All heat transfer was by radiation. The boiler was heated by low voltage, high current, tungsten mesh heaters, and the condenser radiated to an air-cooled surface. A General Electric helical induction pump was used to supply the boiler feed. System throttling valves were fabricated of Cb–1% Zr.

The vapor impingement test section consisted of two parallel divergent nozzles and blade sections operating at the same conditions. The nozzle throat diameters were .072-in. The vapor quality was calculated to be 80% ± 10%.

Pressure measuring transmitters were fabricated of Cb–1% Zr and had tantalum diaphragms. Temperatures were measured with W–5 Re versus W–26 Re thermocouples insulated with high purity alumina.

Test Results. Stationary blade sections of molybdenum base alloys TZM and TZC were tested. There was no corrosion or erosion of either of the test materials after 1096 hr; however, a 1-mil-thick deposit of columbium was found on each blade. This deposit was believed to be due to carryover of liquid from the boiler.

It was stated that the vapor impingement tests were originally scheduled to be run with sodium vapor, but they were changed to cesium, because Ref. 306 indicates that cesium offers more attractive thermodynamic properties. It was also stated that cesium now appears more attractive because of drastic reduction in cost. Approximate cesium prices mentioned were $330/kg for smaller quantities and $22/kg in 5000 kg quantities.

Reference 299--Comparison Study of Cesium and Potassium for Rankine Cycle Space Power Systems
(General Electric Space Power and Propulsion Section)

A preliminary comparison was made of the boiler, condenser, boiler feed pump, and turbine for 500 kw electrical Rankine space power systems using cesium and potassium. The turbine data are summarized in Table 3.

It was stated that the efficiency of the three-stage cesium turbine approached the efficiency of the six-stage potassium turbine when the cesium turbine annulus area ratio for successive stages was increased from the conventional 1.4 to 1.65, and the efficiency of the cesium turbine could be improved slightly by increasing the rotative speed.

Table 3. General Electric Comparison Study of Cesium and Potassium for Rankine Cycle Space Power Systems
Summary of Turbine Data

	Cesium	Potassium
Turbine shaft output power, kw	500	500
Turbine speed, rpm	12,000	24,000
Maximum blade tip speed, fps	~500	~900
Inlet temperature, °F	2100	2100
Inlet pressure, psia	225	145
Inlet superheat, °F	117	117
Exhaust pressure, psia	15	8.8
Exhaust temperature, °F	1300	1300
Flow, lb/sec	9.88	2.62
Number of stages	3	6
Static efficiency, %	78.5	81
Turbine rotor material	TZM	TZM

The report discusses the maximum permissible turbine blade tip speed before erosion can be expected, based on work by O. G. Engel.*

While the study was preliminary in scope, the following conclusions were drawn:

Turbine. The cesium turbine can have three stages compared to six for potassium. Although the three stages were originally determined by a tip speed limitation, the annulus area ratio would still require three stages, even if the tip speed restriction were removed.

The blade temperature of the first stage is about 180°F lower for cesium than for potassium for the same inlet temperature. This may be the greatest advantage of cesium. It affects the choice of materials and thus the stress-temperature-time-creep relationship.

*O. G. Engel, Pits in Metals Caused by Collision with Liquid Drops and Soft Metal Spheres, Journal of Research, National Bureau of Standards, Vol. 62, p. 229, 1959.

The potassium turbine has about two percent higher efficiency. This is owing to the fact that the average tip clearance loss is less for the potassium turbine. A six-stage cesium turbine could be designed with the same efficiency, but it would lose its attractive feature of fewer stages and lower bucket temperatures.

Boiler and Condenser. No significant differences were found in the cesium and potassium condenser designs. Both units weigh approximately 0.75 lb/kwe and have less than 1 psi condensing pressure rise. The cesium boiler, however, was found to be heavier and have a greater boiling pressure loss than the potassium boiler. The cesium boiler weighs 1.5 lb/kwe and has a boiler pressure drop of 17 psi, whereas the potassium boiler weighs 1.1 lb/kwe and has a boiler pressure drop of 11.5 psi. The proposed material of construction for the boiler and condenser was T-111 tantalum alloy.

Boiler Feed Pump. It was recommended that the boiler feed pump be a helical induction electromagnetic type. The cesium pump consumes more than twice as much power as the potassium pump.

The cesium pump cell would be 22% smaller than that of the potassium pump. The heat rejection rate to provide subcooling for cavitation suppression is 17% less for the potassium system.

Reference 300--Turbine Efficiency Versus Work-Speed Requirements (National Aeronautics and Space Administration)

An analytical investigation of the interacting effects of turbine specific work output, rotor blade speed, stage number, and efficiency is presented. The work-speed parameter, λ, the ratio of the square of the mean velocity of the rotor blade to the specific work output, is used to correlate the other variables. The analysis assumed that the work-speed parameter would be the same for all stages in a given turbine.

Increasing the number of stages increases the efficiency for a given work-speed parameter; the upper limit for efficiency is reached when the work-speed parameter is unity.

Reference 301--Turbine Efficiency Versus Velocity Diagram Parameters
(National Aeronautics and Space Administration)

This paper presents the development of equations for use in calculating the efficiency of axial-flow turbines in terms of their velocity diagram parameters.

Reference 302--Cycle Characteristics for Advanced Turboelectric Space Power Systems
(National Aeronautics and Space Administration)

The relative effects of turbine inlet temperature, turbine efficiency, radiator temperature, and working fluid on radiator size were determined for rubidium, potassium, and sodium to 2100, 2300, and 2500°R maximum temperature, respectively.

The temperature level of heat addition to the cycle should be as high as practical, as it has a gross effect on radiator area. A 200°F increase in turbine inlet temperature reduces radiator area by about 30%. For a given turbine inlet temperature, radiator area is more sensitive to turbine efficiency than to radiator temperature. A 10% decrease in turbine efficiency requires approximately a 15% increase in radiator area, while a spread of 400°F in radiator temperature around the optimum value represents only a 10% increase in radiator area.

Specific radiator area, defined as the square feet of radiator surface required per kilowatt of electrical power output, is a function of the turbine inlet and radiator temperatures, and radiator area is at a minimum when the radiator temperature is approximately three-fourths of the absolute turbine inlet temperature. Fluids with high latent heats of vaporization will require turbines with higher specific work characterized by lower mass flows and more stages than fluids with low latent heats.

Reference 303--Analytical Study of Turbine-Geometry Characteristics
(National Aeronautics and Space Administration)

An investigation was made to determine the effect of turbine inlet temperature and working fluid on the number of stages, rotor diameter, and turbine rotative speed for a Rankine cycle space power plant having

an electrical output of 1 Mw. Fluids investigated were sodium, potassium, rubidium, and cesium at turbine inlet temperatures ranging from 2000 to 2600°R and at turbine outlet temperatures equal to 0.75 of the inlet value. Dry saturated vapor at the turbine inlet was assumed. In addition to aerodynamic losses, an additional loss in available energy of approximately 10% was assumed owing to super-saturation of the vapor. The operating stress in the first stage rotor disk was set at the design limit for TZM (titanium-zirconium molybdenum alloy), which was selected for the turbine blade material.

The number of stages increased as the molecular weight of the working fluid decreased. However, increasing the mean diameter of the rotors from the first to the last stage (turbine tapering) resulted in significantly fewer stages.

For a given turbine inlet temperature, the turbine stage mean diameters were found to be nearly equal for cesium, rubidium, and potassium, but were much larger for sodium. An increase in the turbine inlet temperature resulted in 1) an increase in the number of stages and a decrease in blade velocity because of the decreasing strength of the rotor material, 2) a decrease in blade diameter because of the increase in vapor density, and 3) an increase in rotative speed because of the relatively larger decrease in rotor diameter than in blade velocity.

Reference 304--Parametric Exploration of Axial Flow Turbines (National Aeronautics and Space Administration)

An analysis was made to determine the effects of variations in geometric and thermodynamic parameters on axial-flow turbines providing an electrical output of 1 Mw for space power applications. Geometric parameters included turbine tapering (that is, changing the ratio of the mean-section diameter of the last stage rotor to that of the first stage), stator exit angle, disk taper, the ratio of hub-to-tip radii for the last stage rotor, and stress level. Thermodynamic parameters included turbine inlet temperature, turbine temperature ratio, power level, and working fluid. Sodium, potassium, rubidium, and cesium were investigated at turbine inlet temperatures of 2300, 2400, and 2500°R.

Turbine Taper Ratio. Increasing the turbine taper ratio resulted in either improved static efficiency or a reduction in the number of turbine stages. For maximum efficiency, the turbine taper ratio decreased with an increase in the molecular weight of the working fluid. The effect of turbine tapering on the number of stages is reduced as the turbine inlet temperature is reduced. For a fixed number of stages the last stage mean-diameter remained nearly constant over a wide range of values for the turbine taper ratio, and the first stage blade height increased with an increase in turbine taper ratio.

Stator Exit Angle. For maximum efficiency, the stator angle decreased with an increase in the number of stages. For a fixed number of stages, an increase in stator exit angle resulted in a decrease in both rotative speed and Mach number at the last stage rotor exit, and an increase in the first stage blade height. Over a range of 3 to 12 stages, an exit angle of 70° provided nearly peak stage efficiency.

Reference 305--Alkali-Metal Turbine Geometry as Affected by Blade Speed Limitations
(National Aeronautics and Space Administration)

This study is concerned with the possible need to limit maximum blade speeds not only on the basis of maximum allowable stress of the turbine disks, but also to minimize blade erosion and to provide compatibility with common alternator frequencies.

Turbine geometric characteristics, such as the number of stages, diameter, and exit hub-to-tip radius ratio, were determined as a function of blade speed for a 1 Mw power system using sodium, potassium, rubidium, and cesium at a turbine inlet temperature of 2500°R. Dry saturated vapor was assumed at the turbine inlet. A turbine temperature ratio of 0.8, a constant blade mean section speed, and a stator exit angle of 70° were assumed for all turbines. Rotative speeds of 8000, 12,000, and 24,000 rpm were chosen, so that alternator frequencies of 400, 800, 1000, and 2000 cps could be considered.

Both a single 1000 kw turbine and dual 500 kw turbines in a series arrangement were considered; a dual turbine facilitates use of a moisture

separator between turbines. Reaction, impulse, and velocity compounded turbine types were considered. Reaction turbines generally have higher efficiency but require more stages. Velocity-compounded turbines require fewer stages but have much lower efficiencies. Impulse turbines are intermediate between the other two in both efficiency and number of stages.

For the same speed, a reaction turbine requires about twice as many stages as an impulse turbine. For reaction and impulse turbines, the number of stages is inversely proportional to the square of the blade speed; while for velocity-compounded turbines, the number of stages is slightly less than inversely proportional. For example, for an impulse turbine in a single unit:

	Potassium		Cesium	
No. stages	2	10	1	10
Blade speed, fps	900	400	600	200

The blade speed in reaction turbines is about 100 fps lower than in the other turbine types.

The study shows that it is feasible to design turbines with blade speeds limited to less than 500 fps.

References 306, 307, 308--Space Power Plant Study
(Westinghouse Astronuclear Laboratory)

This study compares cesium and potassium as working fluids in a Rankine cycle power conversion system.

Design studies were performed for the turbine, boiler, condenser, radiator, and boiler feed pump for each working fluid; and the systems were then compared on the basis of weight and reliability.

It was assumed that the peak operating temperature in the system would be limited by the creep strength of the TZC-molybdenum base alloy that was selected for the turbine rotors. (Other studies[212, 213] have indicated that the fuel element design considerations would limit the peak temperature in the cycle.) Cesium has a much lower latent heat

per pound than potassium, so that fewer stages are required for the cesium turbine. By using only a few stages in the cesium turbine, the temperature drop from the first stage nozzle inlet to the first stage rotor becomes much greater for cesium than for potassium. Accordingly, with the temperature of the first stage rotor fixed, the cesium turbine inlet (boiler outlet) was set over 200°F higher than for the potassium turbine.

The study assumed that a beryllium, or a beryllium base alloy, would be developed for use in the radiator fins, and the radiator inlet temperature was fixed at 1390°F for both fluids.

The study was conducted for 1 Mw turbine shaft output power. The total estimated weight of the major components for the cesium system was 3,894 lb and 4,883 lb for potassium (see Table 4). The weight advantage for cesium resulted primarily from the lower radiator heat rejection rate made possible by the higher availability of heat in the cesium cycle, which was assumed to operate at a higher peak temperature than the potassium cycle. Both cycles use the same radiator temperature.

The study concluded that the power plant using cesium was lighter, more compact, and more efficient than the power plant using potassium. The smaller number of stages on the cesium turbine should enhance reliability and reduce development problems significantly.

The flow diagram for both working fluids is shown in Fig. 1.

Table 4. Westinghouse Astronuclear Space Power Plant Study
Summary of Component Weight

	Cesium (lb)	Potassium (lb)
Pump	62	46
Boiler	458	277
Turbine	37	89
Condenser	151	180
Radiator	3186	4291
Total	3894	4883

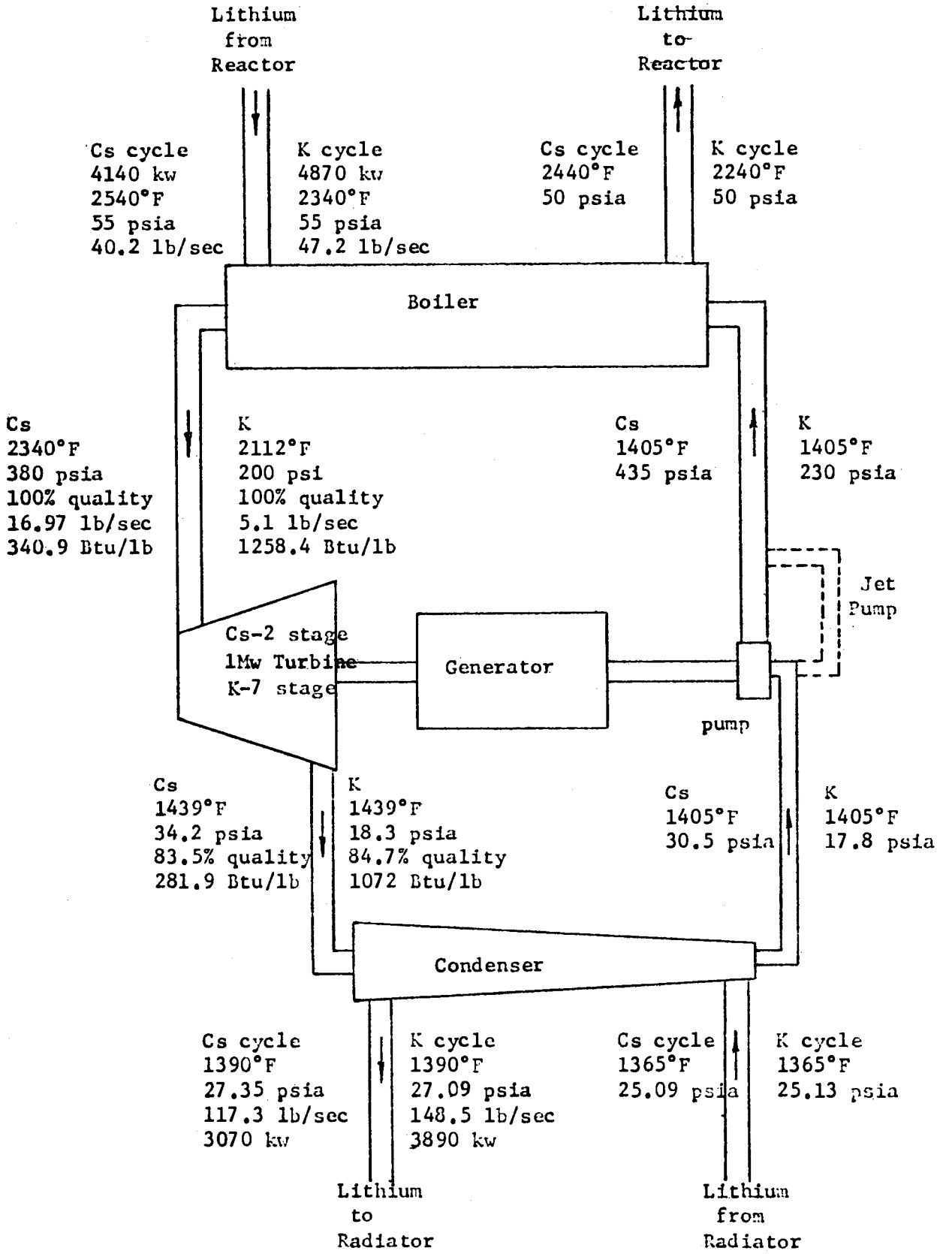

Fig. 1. Cesium and Potassium Flow Diagram for Rankine Cycle Space Power Plant. (From Westinghouse Astronuclear Laboratory, Ref. 306)

Boiler. Lithium was used to transport heat from the reactor to the primary side of the boiler. The boiler flow rates and temperatures are shown in Fig. 1. A once-through boiler was selected over a recirculation type. The boiler is of the straight-thru concentric tube type with the boiling fluid inside the inner tube. Flow swirlers were assumed in both the tube and the annulus. A flow restriction orifice was assumed at the entrance to each boiler tube to enhance flow stability.

The 99 literature references, which are part of the study, cover correlation of critical heat flux, bulk boiling heat transfer coefficients, and subcooled heat transfer coefficients.

A summary of the boiler data is given in Table 5. Note the increased material thicknesses required for the cesium boiler due to the higher operating pressure.

Turbine. The upper temperature limit for both cesium and potassium turbines is set by the allowable stress in the first stage rotor. Two turbine stages were selected for cesium versus seven stages for the potassium turbine. A greater temperature drop across the first stage nozzle in the cesium turbine was interpreted to imply that a higher turbine inlet temperature was permissible; the higher inlet temperature results in a higher cycle efficiency. The study proposes that an integral turbine-generator supported on two cesium lubricated bearings be used with cesium; the two turbine rotors would be overhung. It is asserted that the seven-stage potassium turbine generator would require three bearings, with one bearing located at the high-temperature turbine inlet end of the housing. The bearing design was not included in the study.

A summary of the turbine design data is presented in Table 6.

As a result of a more recent turbine erosion study by Westinghouse Astronuclear,[309] the design of the cesium turbine blading was altered to clean up the flow condition at the hub; also, some change in the flow of cesium through the turbine was considered advisable based on more recent thermophysical properties.[314] These changes do not alter the basic conclusions of the original space power plant study. Westinghouse personnel feel that erosion should not be a serious problem for alkali metal turbines in which the aerodynamic design has been given adequate consideration.

Table 5. Westinghouse Astronuclear Space Power Plant Study
Summary of Boiler Data

	Cesium	Potassium
Heat transferred, total, kw	4140	4880
Weight, lb	458	277
Flow configuration	Counterflow	Counterflow
Type boiler	Straight thru concentric tube	Straight thru concentric tube
Number of tubes	161	172
Tube ID, in.	.305	.305
Average tube length, in.	28.6	25.6
Tube arrangement	Equilateral triangle	Equilateral triangle
Critical heat flux, boiling regime, Btu/hr ft^2	1.25×10^6	1.14×10^6
Peak heat flux, boiling regime, Btu/hr ft^2	0.70×10^6	0.84×10^6
Outer tube sheet thickness, in.	.860	.180
Inner tube sheet thickness, in.	.390	.180
End vessel thickness, in.	.440	.085
Material	T-222	T-222
Material design stress at temperature, psi	4000	9000
Temperature for 2% creep in 20,000 hr, °F	2550	2350

Boiler Feed Pump. The boiler feed is supplied with centrifugal pumps in which the bearings are lubricated with liquid metal. The study does not include details of the bearing design. It is stated that the pumps can be mounted directly on the shaft with the turbine-generator, or they may be driven separately with a canned electric motor. A jet pump is required to provide adequate net positive suction head at the pump inlet.

Initially, the pressure rise requirement for the boiler feed pump did not include the boiler pressure drop. Subsequently, boiler design

work has shown that an increase of approximately 20% in the pump pressure rise is required, and the pump weight has been increased accordingly. The pump design parameters and operating data are listed in Table 7.

Table 6. Westinghouse Astronuclear Space Power Plant Study Summary of Turbine Data

	Cesium	Potassium
Turbine shaft output power, kw	1000	1000
Turbine speed, rpm	24,000	24,000
First critical speed, rpm	30,750	33,400
Blade speed at mean diam, fps	600	600
Inlet temperature, °F	2340	2112
Inlet pressure, psia	380	200
Inlet enthalpy, Btu/lb	340.9	1258.4
Enthalpy at exhaust, Btu/lb	281.9	1072
Flow, lb/sec	16.97	5.1
Exhaust temperature, °F	1439	1439
Exhaust pressure, psia	34.2	18.3
Number of stages	2	7
Turbine rotor material	TZC	TZC
First stage rotor temperature, °F	2016	2060
Operating stress, psi	18,500	19,050
Maximum allowable stress for 100,000 hr rupture, psi	29,000	26,000
Turbine housing	T-111	T-111

Condenser. The condenser data are summarized in Table 8, which was excerpted from the Westinghouse study. The cesium condenser weighs 151 lb, and the potassium condenser weighs 180 lb. The difference in weight stems primarily from the difference in heat rejection rates. The construction material is B-33, a columbium-base alloy.

Table 7. Westinghouse Astronuclear Space Power Plant Study
Summary of Boiler Feed Pump Data

	Cesium	Potassium
Head, ft[a]	480	630
Head, psi[a]	345.8	181.7
Flow, lb/sec	16.97	5.1
Flow, gal/min	73.5	55
Pump specific speed, $N_s = \frac{NQ^{1/2}}{H^{3/4}}$	1008	708
Required pump suction pressure, psi[b]	81.5	34.4
Indicated static pressure, Fig. 1, psi	30.5	17.8
Impeller outer diameter, in.	3.34	3.85
Speed, rpm	12,000	12,000
β_1, degrees	7.9	9.1
β_2, degrees	20	20
Number of diffuser vanes	7	7
Fluid pump power, hp	24.3	9.8
Total power required, hp	27	13
Canned motor available power, hp	≈29	≈14.5
Critical speed, rpm	13,600	22,100
Corrected pump weight, lb[a]	62	46
Pump weight without drive motor, lb	7.8	7.9
Pump material, housing, impeller, casing	Cb–1% Zr	Cb–1% Zr
Shaft	Mo	Mo
Bearing journal, Kennametal	K-138A	K-138A
Bearing stator, Carboloy	779	779

[a]Subsequently boiler pressure drop was increased, requiring higher pump head.

[b]Requires jet pump to raise NPSH.

Table 8. Westinghouse Astronuclear Space Power Plant Study
Summary of Condenser Data

	Cesium	Potassium
Vapor inlet temperature, °F	1439	1439
Vapor inlet pressure, psi	34.2	18.3
Vapor quality, %	83.5	84.7
Condensate outlet temperature, °F	1405	1405
Condensate outlet pressure, psi	30.5	17.75
Total flow, lb/sec	16.97	5.10
Heat rejected, Btu/sec	2913	3685
Lithium inlet temperature, °F	1365	1365
Lithium inlet pressure, psi	27.35	27.09
Lithium outlet temperature, °F	1390	1390
Lithium outlet pressure, psi	25.09	25.13
Lithium flow rate, lb/sec	117.36	148.5
Overall heat transfer coefficient - $\frac{\text{Btu}}{\text{hr-ft}^2 - {}^\circ\text{F}}$	4000	3770
Heat transfer area, ft^2	43.4	58.07
Number of condenser tubes	217	169
Condenser Weight, lb	151.1	180.2

Radiator. The radiator data from the Westinghouse study are summarized in Table 9.

As stated earlier, the radiator for the cesium system accounts for most of the reduction in weight of the cesium system compared to the potassium system. One problem area stated in the study concerns the need for a high thermal conductivity joint between beryllium, or beryllium-base alloys, and columbium-base alloys. The beryllium would be used as fin material, and the columbium would be used in the radiator piping and tubing.

Table 9. Westinghouse Astronuclear Space Power Plant Study Summary of Liquid Coolant Radiator Data

	Cesium	Potassium
Flat Type Radiator		
Length (L), ft	45.2	47.8
No. of tubes	80	80
Width (Z), ft	9.44	11.31
Radiator weight, lb	2441	3298
Pump weight, lb	220	280
Total weight, lb	2661	3578
Radiating area, ft^2	853	1081
Meteoroid armor thickness, in.	0.564	0.594
Cylindrical Type Radiator		
Length (Z), ft	13.77	17.36
No. of tubes	126	118
Radiator diam ($\frac{L}{\pi}$), in.	260	260
Radiator weight, lb	2750	3757
Hardware weight, lb	138	156
Pump weight, lb	298	378
Total weight, lb	3186	4291
Radiating area, ft^2	936	1180
Meteoroid diam thickness, in.	0.476	0.492
Heat rejected, Btu/sec	2913	3685

POTASSIUM AND CESIUM REFERENCES

Potassium Bibliography

Conferences and Meetings

1. N. W. Snyder, Energy Conversion for Space Power, Vol. 3, 1961; N. W. Snyder, Space Power Systems, Vol. 4, 1961, Progress in Astronautics and Rocketry, Academic Press, New York and London, (Technical Papers from American Rocket Society First Biennial Space Power Systems Conference, Santa Monica, California, September 27–30, 1960).

2. M. A. Zipkins and R. N. Edwards, Power Systems for Space Flight, Progress in Astronautics and Aeronautics, Vol. 11, Academic Press, New York and London, 1963, (Technical Papers from American Rocket Society Second Biennial Space Power Systems Conference, Santa Monica, California, September 25–28, 1962).

3. Nuclear Electric Power Systems Development Session, Third Biennial AIAA Aerospace Power Systems Conference, Philadelphia, Pennsylvania, USAEC Report TID-7703 (Confidential), CONF-640901, September 1964.

4. M. A. Zipkin, Large Turbo-Nuclear Space Power Systems, Advanced Propulsion Concepts, Proceedings of the Third Symposium, Gordon and Breach, Vol. 1 (sponsored by the United States Air Force Office of Scientific Research and General Electric Company, Cincinnati, Ohio), October 2–4, 1962, pp. 201–259.

5. AIAA Specialist Conference on Rankine Space Power Systems, NASA, Lewis Research Center, Cleveland, Ohio, October 1965, USAEC Report CONF-651026, Vol. 1 (Unclassified), Vol. 2 (Classified).

6. Space Power Systems Advanced Technology Conference, Lewis Research Center, Cleveland, Ohio, August 23–24, 1966, NASA SP-131.

7. NASA-AEC Liquid-Metals Corrosion Meeting, Washington, D.C., December 7–8, 1960, NASA-TN-D-769.

8. NASA-AEC Liquid Metals Corrosion Meeting, Brookhaven National Laboratory, December 14–15, 1961, TID-7626 Part 1 and Part 2.

9. NASA-AEC Liquid-Metals Corrosion Meeting, Lewis Research Center, Cleveland, Ohio, October 2–3, 1963, Report NASA SP-41 (Unclassified), SP-42 (Classified).

10. AEC-NASA Liquid Metals Information Meeting, Gatlinburg, Tennessee, April 1965, USAEC Report CONF-650411 (Classified Papers in TID-22353).

Potassium Bibliography (continued)

Conferences and Meetings (continued)

11. Meeting on High Temperature Liquid Metal Heat Transfer Technology, Argonne National Laboratory, June 14–15, 1961, USAEC Report ANL-6507 (Classified).

12. Proceedings of the 1962 High Temperature Liquid Metals Heat Transfer Technology Meeting, Brookhaven National Laboratory, USAEC Report BNL-756.

13. Proceedings of 1963 High-Temperature Liquid-Metal Heat Transfer Meeting, Oak Ridge National Laboratory, September 4–6, 1963, USAEC Report ORNL-3605, Vol. 1 and 2.

14. Proceedings of the Conference on Application of High Temperature Instrumentation to Liquid-Metal Experiments, Argonne National Laboratory, September 28–29, 1965, Report ANL-7100. (Joint AEC/NASA Conference).

15. High Temperature Liquid-Metal Technology Review, A Bimonthly Technical Progress Review by Brookhaven National Laboratory for USAEC, Vol. 1, No. 1, February 1963, Report BNL-788 (PR-1). [Most recent is Vol. 4, No. 6, December 1966, Report BNL-50034 (PR-24)].

Aerojet-General Nucleonics

16. C. R. Fisher, J. H. Moskowitz, and L. T. Clark, Alkali Metals Evaluation Program, Swirl Flow Boiling of Alkali Metals--Heat Transfer Pressure Drop, Topical Report, AGN-8127, January 1965.

AiResearch Manufacturing Company

17. AiResearch Manufacturing Company, 300 kw Nuclear Dynamic Space Power Generating System, First Quarterly Technical Report for Period Ending July 31, 1960, Report SY-5210-R.

18. AiResearch Manufacturing Company, 300 kw Nuclear Dynamic Space Power Generation System, Second Quarterly Technical Report for Period Ending October 31, 1960, Report No. SY-5213-R, Vol. I and II.

19. AiResearch Manufacturing Company, Preliminary Evaluation of Space Systems Utilizing a 300 kw Power Unit, Report SY-5261-MR, January 1961.

Potassium Bibliography (continued)

AiResearch Manufacturing Company (continued)

20. AiResearch Manufacturing Company, 300 kw Nuclear Dynamic Space Power Generation System, Third Quarterly Technical Report for Period Ending January 31, 1961, Report SY-5216-R, Vol. I and II.

21. AiResearch Manufacturing Company, 300 kw Nuclear Dynamic Space Power Generation System, Third Quarterly Technical Report for Period Ending January 31, 1961, Report SY-5216-R, Vol. III.

22. AiResearch Manufacturing Company, SPUR Power Conversion System Phase I, Fourth Quarterly Progress Report for Period Ending April 30, 1961, Report SY-5219-R.

23. 300 kw Nuclear Dynamic Space Generating Systems, Phase I Experimental Program, Report SY-5240-MR, Rev. 3, AiResearch Manufacturing Company, September 1961.

24. SPUR-Analysis of Ionic Power Converter, Report SY-5265-MR, AiResearch Manufacturing Company, September 1961.

25. SPUR Phase I, Final Report, Summary Description of the Power System, Report SY-5305-R, Part I, AiResearch Manufacturing Company, September 1961.

26. Reactor Loop Design Analysis Final Report, ASD Technical Report SPUR Phase I, Report SY-5305-R, Part III (Secret), AiResearch Manufacturing Company, November 1962.

27. Materials Evaluation Summary Final Report, ASD Technical Report SPUR Phase I, Report SY-5305-R, Part IV (Secret), AiResearch Manufacturing Company, July 1962.

28. AiResearch Manufacturing Company, SPUR Power System, First Quarterly Progress Report for Period Ending July 31, 1961, Report SY-5314-R1.

29. AiResearch Manufacturing Company, SPUR Power System, Second Quarterly Progress Report for Period Ending October 31, 1961, Report SY-5314-R2.

30. AiResearch Manufacturing Company, SPUR Power System, Third Quarterly Progress Report for Period Ending January 31, 1962, Report SY-5314-R3.

31. Power Conversion Loop Analysis and Experiments (SPUR), Technical Documentary Report SY-5377-R, Part I, ASD-TDR-62-711 (CRD), Interim Phase Final Report, AiResearch Manufacturing Company, June 1962.

Potassium Bibliography (continued)

AiResearch Manufacturing Company (continued)

32. Reactor Loop Analysis and Experiments (SPUR) Interim Phase, Technical Documentary Report SY-5377-R, Part II, ASD-TDR-62-711 (CRD), AiResearch Manufacturing Company, June 1962.

33. AiResearch Manufacturing Company, SPUR Power System, Quarterly Progress Report for Period Ending June 30, 1962, Report SY-5396-R1.

34. AiResearch Manufacturing Company, SPUR Power System, Quarterly Progress Report for Period Ending October 1962, Report SY-5396-R2.

35. AiResearch Manufacturing Company, SPUR Power System, Quarterly Progress Report for Period Ending December 31, 1962, Report SY-5396-R3.

36. SPUR Power System, Phase II, Annual Technical Summary Report SY-5457-R, AiResearch Manufacturing Company, for Period Ending December 31, 1962.

37. AiResearch Manufacturing Company, SPUR Power System, Quarterly Progress Report for Period Ending March 31, 1963, Report SY-5396-R4.

38. AiResearch Manufacturing Company, SPUR Power System, Quarterly Progress Report for Period Ending September 30, 1963, Report SY-5396-R6.

39. AiResearch Manufacturing Company, SPUR Power System, Quarterly Progress Report for Period Ending December 31, 1963, Report SY-5396-R7.

40. SNAP 50/SPUR Power System, Annual Summary Report APS-5071-R, AiResearch Manufacturing Company, for Period Ending December 31, 1963.

41. SPUR Reliability, Heat Rejection (condensing) Subsystem, Report SY-5544-R, AiResearch Manufacturing Company, June 1963.

42. SPUR Generator Development, Generator Stator Bore Seal, Report SY-5467-R, ASD-TDR-63-677, Part I, AiResearch Manufacturing Company, July 1963.

43. Bearing Analysis for the SPUR Turbogenerator, Topical Report SY-5465-R, ASD-TDR-63-833, AiResearch Manufacturing Company, September 1963.

44. Alternate Turbine Generator Development Program for the 350 kw SPUR System, Topical Report, SY-5468-R, ASD-TDR-63-736, AiResearch Manufacturing Company, September 1963.

45. Materials Investigation SPUR Program, Creep Rupture Properties of SAE 4340 Steel, Topical Report, SY-5462-R, ASD-TDR-63-270, Part I, AiResearch Manufacturing Company, April 1963.

Potassium Bibliography (continued)

AiResearch Manufacturing Company (continued)

46. Materials Investigation SPUR Program, Creep Rupture Properties of Mo + 0.5 w/o Ti, Topical Report, SY-5459-R, ASD-TDR-63-270, Part II, AiResearch Manufacturing Company, November 1963.

47. Materials Investigation SPUR Program Creep Rupture Properties of Mo + 0.5 w/o Ti, Topical Report, SY-5460-R, ASD-TDR-63-270, Part III, AiResearch Manufacturing Company, December 1963.

48. SPUR Power System, Fatigue Evaluation of Cb I w/o Zr, Phase II, Topical Report, SY-5461-R, ASD-TDR-63-270, Part IV, AiResearch Manufacturing Company, for Period Ending August 31, 1963.

49. SPUR Power System, Controls Analysis of the SPUR Reactor Loop, Phase II, Topical Report, SY-5471-R, ASD-TDR-63-735, AiResearch Manufacturing Company, November 1963.

50. SPUR Power System, Bearing Tests for the SPUR Turbogenerator, Topical Report, SY-5464-R, APL-TDR-64-27, AiResearch Manufacturing Company, for Period Ending November 30, 1963.

51. SNAP 50/SPUR Boiler Computer Program, Report L-9390, AiResearch Manufacturing Company, February 1964.

52. SNAP 50/SPUR Boiler and Condenser Pressure Drop Equations, Report L-9389, AiResearch Manufacturing Company, February 1964.

53. Generator Development SNAP 50/SPUR Program Pole-Face Loss Evaluation, Report APS-5117-R, AFAPL-TR-64-153, AiResearch Manufacturing Company, February 1964.

54. Generator Development, SNAP 50/SPUR Program, Electrical Insulation Development, Report APS-5118-R, AFAPL-TR-64-152, AiResearch Manufacturing Company, February 1964.

55. SNAP 50/SPUR Direct Condensing Cycle, Report APS-5046-MR, AiResearch Manufacturing Company, March 1964.

56. SPUR Power System, Phase II Topical Report, SPUR Reactor Demonstration Pump and Dynamic Corrosion Simulator Loop, Report SY-5470-R, APL-TDR-64-24 (CRD), AiResearch Manufacturing Company, March 1964.

57. SPUR Power System, Biaxial Creep of Materials in Lithium: Development of Apparatus and Trial Run with Type 304L Stainless Steel, Topical Report SY-5472-R, APL-TDR-64-73, AiResearch Manufacturing Company, for Period Ending April 1964.

Potassium Bibliography (continued)

AiResearch Manufacturing Company (continued)

58. SNAP 50/SPUR Quarterly Review Meeting, Phoenix, April 8 and 9, 1964, Report APS-5080-R (CRD), AiResearch Manufacturing Company.

59. Test Plan, Freon Flow Stability Loop, SNAP 50/SPUR Program, Report L-9434, AiResearch Manufacturing Company, May 1964.

60. SNAP 50/SPUR Radiator Flow Distribution Analysis, Report L-9435, AiResearch Manufacturing Company, June 1964.

61. AiResearch Manufacturing Company, SNAP 50/SPUR Power System, Quarterly Technical Progress Report for Period Ending July 31, 1964, Report APS-5090-R2.

62. SNAP 50/SPUR Program, Flow Stability in Multitube Forced Convection Vaporizers, Report L-9448, APL-TDR-64-117, AiResearch Manufacturing Company, August 1964.

63. AiResearch Manufacturing Company, SNAP 50/SPUR Power System, Quarterly Technical Progress Report for Period Ending October 31, 1964, Report APS-5090-R3.

64. Creep Rupture Properties of Stress Relieved TZM Alloy, Report APS-5092-R, APL-TDR-64-116, Part 1, AiResearch Manufacturing Company, October 1964.

65. SNAP 50/SPUR Boiler Condenser Radiator Turbogenerator, PSAC Report, APS-5113-R, AiResearch Manufacturing Company, October 1964.

66. Forced Convection Vaporization of Potassium in a Single Tube, Report L-9452, APL-TDR-64-115, AiResearch Manufacturing Company, November 1964.

67. Mass Transfer Tests with Two-Phase Flow, Report SY-5463-R, APL-TDR-64-119, AiResearch Manufacturing Company, November 1964.

68. Engineering Report-Design and Development of Automatic and Manually Operated Position Detectors for Use With Liquid Metals, Report APS-5126-R, AiResearch Manufacturing Company, December 1964.

69. Engineering Report Preliminary Design of a Static Frequency Converter for SNAP 50/SPUR, Report APS-5128-R, AiResearch Manufacturing Company, December 1964.

70. Engineering Report Development of Performance Measuring Instrumentation for the Turbodynamic Bearing Test Rig, Report APS-5122-R AiResearch Manufacturing Company, December 1964.

Potassium Bibliography (continued)

AiResearch Manufacturing Company (continued)

71. SNAP 50/SPUR Annual Technical Summary Report, APS-5153-R1, AiResearch Manufacturing Company, for Period Ending December 31, 1964.

72. AiResearch Manufacturing Company, SNAP 50/SPUR, Quarterly Technical Progress Report for Period Ending December 31, 1964, Report APS-5152-R1.

73. AiResearch Manufacturing Company, SNAP 50/SPUR, Quarterly Technical Progress Report for Period Ending March 31, 1965, Report APS-5152-R2.

74. AiResearch Manufacturing Company, SNAP 50/SPUR, Quarterly Technical Progress Report for Period Ending June 30, 1965, Report APS-5152-R3.

75. AiResearch Manufacturing Company, SNAP 50/SPUR, Quarterly Technical Progress Report for Period Ending September 30, 1965, Report APS-5152-R4.

76. AiResearch Manufacturing Company, SNAP 50/SPUR, Quarterly Technical Progress Report for Period Ending December 31, 1965, Report APS-5152-R5.

77. SNAP 50/SPUR Annual Technical Summary Report, APS-5153-R2, AiResearch Manufacturing Company, for Period Ending December 31, 1965.

78. SNAP 50/SPUR Turbine Test Facility, Test Plan Report APS-5154-R, AiResearch Manufacturing Company, January 1965.

79. Radiators for SNAP 50/SPUR, Report L-9443, AFAPL TR-64-143, AiResearch Manufacturing Company, March 1965.

80. Potassium Turbine Erosion Investigation and Test Programs, Report APS-5159-R, AiResearch Manufacturing Company, April 1965.

81. SNAP 50/SPUR Power System, Mass-Transfer of TZM by Potassium in Boiling-Refluxing Capsules, Phase V, Topical Report, APS-5160-R Part III, APL-TDR 64-116, AiResearch Manufacturing Company, May 1965.

82. Materials Investigation for SNAP 50/SPUR Program, Mechanical Properties of TZM, Report APS-5157-R, AFAPL-TR-65-51, AiResearch Manufacturing Company, June 1965.

83. SNAP 50/SPUR Auxillary Power System Frequency Converter Program Design Study Phase, Report APS-5181-R, AiResearch Manufacturing Company, October 1965.

Potassium Bibliography (continued)

AiResearch Manufacturing Company (continued)

84. J. H. Dannan and L. E. Chadbourne, Potassium Turbine Generator Development, pp. 498–520 in AIAA Specialists Conference on Rankine Space Power Systems, Vol. I, USAEC Report CONF-651026, October 1965, and AiResearch Report APS-5183-R.

85. E. A. Kovacevich, SNAP 50/SPUR Turbine Materials Evaluation, Erosion Properties of Selected Turbine Materials in Water and Potassium, Report APS-5190-R, AFAPL-TR-65-130, AiResearch Manufacturing Company, January 1966.

86. AiResearch Manufacturing Company, SNAP 50/SPUR, Quarterly Technical Progress Report for Period Ending March 31, 1966, Report APS-5152-R6.

87. AiResearch Manufacturing Company, SNAP 50/SPUR, Quarterly Technical Progress Report for Period Ending June 30, 1966, Report APS-5152-R7.

88. SPUR Rotor-Dynamics, Topical Report, APS-5217-R, AiResearch Manufacturing Company, June 1966.

89. Materials Investigation SNAP 50/SPUR Program, Elevated Temperature Fatigue Studies of Wrought Stress Relieved TZM Alloy, Report APS-5237-R, AiResearch Manufacturing Company, October 1966.

90. Materials Investigation SNAP 50/SPUR Program, Elevated Temperature Tensile Properties and Ductile Brittle Transition Temperature of Forged TZM Alloy, APS-5238-R, AiResearch Manufacturing Company, October 1966.

91. Materials Investigation, SNAP 50/SPUR Program, Creep Properties of a TZM Forging at 1900°F, Report APS-5243-R, AiResearch Manufacturing Company, November 1966.

92. Bearing Analysis, SNAP 50/SPUR Program, Thrust Bearing Hydrodynamic Performance Study, Report APS-5245, AiResearch Manufacturing Company, November 1966.

93. SNAP 50/SPUR Program, Turbine, Generator Design Analysis, Report APS-5233-R, AiResearch Manufacturing Company, November 1966.

94. SNAP 50/SPUR Program, Single-Tube Freon Boiler Experiments, Report APS-5248, AiResearch Manufacturing Company, December 1966.

95. SNAP 50/SPUR Nuclear Mechanical Power Unit, Experimental Research Development Program, Final Report, APS-5249, AiResearch Manufacturing Company, December 1966.

Potassium Bibliography (continued)

AiResearch Manufacturing Company (continued)

96. SNAP 50/SPUR Program, Bearing Analysis, Dynamic Stability Computer Study, Topical Report, APS-5232, Vol. I, AFAPL-TR-66-123, AiResearch Manufacturing Company, December 1966.

97. Liquid-Metal Boilers for Rankine-Cycle Space Power Systems, Report APS-5244-R, AFAPL-TR-67, Vols. I, II, AiResearch Manufacturing Company, December 1966.

Allison, Division of General Motors and United Nuclear Company

98. Walker and Myers, Investigations of Bi-Metallic Liquid Metal Systems, Progress Report (February 1 – May 1966), USAEC Report EDR-4719 or GMAD-3643-5.

99. R. Fox and M. Tumey, MCR Liquid Metal Technology Summary Report, USAEC Report EDR 4217, Vol. I, or GMAD-3078-32, Vol. I, May 3, 1965. (Confidential.)

100. N. Hyman, S. Kostman, and J. McKee, MCR Liquid Metal Technology Summary Report, USAEC Report EDR-4217, Vol. II, and GMAD-3078-32, Vol. II, May 3, 1965. (Confidential.)

101. K. Goldmann et al., Carbon and Nitrogen Transfer in a Type 316 Stainless Steel, Cb–1% Zr Liquid Potassium System, pp. 117–126 in Nuclear Applications, Vol. 3, No. 2, February 1967.

102. Investigation of Bi-Metallic Liquid Metal Systems, Final Report, USAEC Report EDR-4829 or GMAD-3643-8, September 1966.

General Electric Space Power and Propulsion Section--Two Stage Potassium Test Turbine

103. J. W. Semmel, Jr., H. E. Nichols, R. E. Yount, and R. G. Frank, Two-Stage Potassium Test Turbine, Vol. I, Materials Support, GE63FPD238, SPPS, General Electric Company, NASA Contract NAS-5-1143, May 8, 1963.

104. R. J. Rossbach and G. C. Wesling, Fluid Dynamic Design and Performance of Two-Stage Turbine in Potassium Vapor, Topical Report, SPPS, General Electric Company, NASA Contract 5-1143, 1966. (To be published.)

105. H. E. Nichols and R. W. Fink, Mechanical Design and Development of Two Stage Potassium Test Turbine, SPPS, General Electric Company, NASA Contract 5-1143, Topical Report, 1966. (To be published.)

Potassium Bibliography (continued)

General Electric Space Power and Propulsion Section--Two Stage Potassium Test Turbine (continued)

106. S. E. Eckard, Potassium Vapor Turbine Test Facility, Topical Report, SPPS, General Electric Company, NASA Contract 5-1143, 1966. (To be published.)

107. J. W. Semmel, Jr., W. F. Zimmerman, R. B. Hand, and D. S. Engleby, Materials Support of Performance and Endurance Test, Topical Report, SPPS, General Electric Company, NASA Contract 5-1143, 1966. (To be published.)

108. E. Schnetzer, Two Stage Potassium Test Turbine, Summary Report, SPPS, General Electric Company, NASA Contract 5-1143, 1966. (To be published.)

109. E. Schnetzer et al., Performance Test of a Two-Stage, 200 Horsepower Turbine in Wet Potassium Vapor, pp. 521–546 in AIAA Specialists Conference on Rankine Space Power Systems, Vol. I, USAEC Report CONF-651026, October 1965.

110. General Electric Company, Flight Propulsion Laboratory Department, Two-Stage Potassium Test Turbine, Quarterly Report No. 1 for Quarter Ending August 8, 1961.

111. General Electric Company, Flight Propulsion Laboratory Department, Two-Stage Potassium Test Turbine, Quarterly Report No. 2 for Quarter Ending November 8, 1961.

112. General Electric Company, Flight Propulsion Laboratory Department, Two-Stage Potassium Test Turbine, Quarterly Report No. 3 for Quarter Ending February 8, 1962.

113. General Electric Company, Flight Propulsion Laboratory Department, Two-Stage Potassium Test Turbine, Quarterly Report No. 4 for Quarter Ending May 8, 1962.

114. General Electric Company, Space Power and Propulsion Section, Two-Stage Potassium Test Turbine, Quarterly Report No. 5 for Quarter Ending August 8, 1962.

115. General Electric Company, Space Power and Propulsion Section, Two-Stage Potassium Test Turbine, Quarterly Report No. 6 for Quarter Ending November 8, 1962.

116. General Electric Company, Space Power and Propulsion Section, Two-Stage Potassium Test Turbine, Quarterly Report No. 7 for Quarter Ending February 8, 1963.

Potassium Bibliography (continued)

General Electric Space Power and Propulsion Section--Two Stage Potassium Test Turbine (continued)

117. General Electric Company, Space Power and Propulsion Section, Two-Stage Potassium Test Turbine, Quarterly Report No. 8 for Quarter Ending May 8, 1963.

118. General Electric Company, Space Power and Propulsion Section, Two-Stage Potassium Test Turbine, Quarterly Progress Report No. 9 for Quarter Ending August 8, 1963.

119. General Electric Company, Space Power and Propulsion Section, Two-Stage Potassium Test Turbine, Quarterly Progress Report No. 10 for Quarter Ending November 8, 1963.

120. General Electric Company, Space Power and Propulsion Section, Two-Stage Potassium Test Turbine, Quarterly Progress Report No. 11 for Quarter Ending February 8, 1964.

121. General Electric Company, Space Power and Propulsion Section, Two-Stage Potassium Test Turbine, Quarterly Progress Report No. 12 for Period: February 9, 1964 thru May 8, 1964, NASA-CR-54115.

122. General Electric Company, Space Power and Propulsion Section, Two-Stage Potassium Test Turbine, Quarterly Progress Report No. 13 for Period: May 8, 1964 thru August 8, 1964, NASA CR-54211.

123. General Electric Company, Space Power and Propulsion Section, Two-Stage Potassium Test Turbine, Quarterly Progress Report No. 14 for Period: August 8, 1964 thru November 8, 1964, NASA-CR-54285.

124. General Electric Company, Space Power and Propulsion Section, Two-Stage Potassium Test Turbine, Quarterly Progress Report No. 15 for Period: November 8, 1964 thru February 8, 1965, NASA-CR-54392.

125. General Electric Company, Space Power and Propulsion Section, Two-Stage Potassium Test Turbine, Quarterly Progress Report No. 16 for Period: February 8, 1965 thru May 8, 1965, NASA-CR-54643.

126. General Electric Company, Space Power and Propulsion Section, Two-Stage Potassium Test Turbine, Quarterly Progress Report No. 17 for Period: May 8, 1965 thru August 8, 1965, NASA-CR-54897.

Potassium Bibliography (continued)

General Electric Space Power and Propulsion Section--Two Stage Potassium Test Turbine (continued)

127. General Electric Company, Space Power and Propulsion Section, Two-Stage Potassium Test Turbine, Quarterly Progress Report No. 18 for Period: August 8, 1965 thru November 8, 1965, NASA-CR-54917.

General Electric Space Power and Propulsion Section--Alkali Metals Boiling and Condensing Investigations

128. R. D. Brooks, Alkali Metals Boiling and Condensing Investigations, Vol. I, Final Report, SPPS, MSD, General Electric, NASA-CR-54050, June 1964.

129. F. E. Tippets, J. R. Peterson, and S. G. Sawochka, Potassium Multiple--Tube Test Condenser Design Study, Topical Report, NASA-CR-72137, 1966.

130. D. R. Ferguson, Computer Codes for Thermal Design of Potassium Boilers and Condensers, Topical Report, NASA-72141, 1966.

131. J. A. Bond and G. L. Converse, Vaporization of High-Temperature Potassium in Forced Convection at Temperatures from 1800 to 2100°F, Topical Report, R66SD3016, 1966.

132. J. R. Peterson, High Performance "Once-Through" Boiling of Potassium in Single Tubes at Vapor Temperatures from 1500 to 1750°F, Topical Report, R66SD3020, 1966.

133. S. G. Sawochka, Thermal and Fluid Dynamic Performance of Potassium During Condensation Inside Single Tubes, 1966. (To be published.)

134. J. R. Peterson, High Performance Once-Through Boiling of Potassium, pp. 357–388 in AIAA Specialists Conference on Rankine Space Power Systems, Vol. I, USAEC Report CONF-651026, October 1965.

135. J. A. Bond, J. R. Peterson, and F. E. Tippets, Heat Transfer and Pressure Drop Measurements for High Temperature Boiling Potassium in Forced Convection, Proceedings of the Conference on Application of High Temperature Instrumentation to Liquid Metal Experiments, USAEC Report ANL 7100, Argonne National Laboratory, pp. 53–96, September 1965.

Potassium Bibliography (continued)

General Electric Space Power and Propulsion Section--Alkali Metals Boiling and Condensing Investigations (continued)

136. S. G. Sawochka, Measurements of Forced Convection Condensing Potassium Heat Transfer, Proceedings of the Conference on Application of High-Temperature Instrumentation to Liquid Metal Experiments, USAEC Report ANL 7100, Argonne National Laboratory, pp. 97-126, September 1965.

137. General Electric Company, Space Power and Propulsion Section, Alkali Metals Boiling and Condensing Investigations, Quarterly Report No. 1 for the Period July 1, 1962 thru September 30, 1962.

138. General Electric Company, Space Power and Propulsion Section, Alkali Metals Boiling and Condensing Investigations, Quarterly Progress Reports 2 and 3 Covering the Period September 30, 1962 thru March 31, 1963.

139. General Electric Company, Space Power and Propulsion Section, Alkali Metals Boiling and Condensing Investigations, Quarterly Progress Report No. 4 Covering the Period April 1 through June 30, 1963.

140. General Electric Company, Space Power and Propulsion Section, Alkali Metals Boiling and Condensing Investigations, Quarterly Report No. 5 Covering the Period July 1 thru September 30, 1963, Vol. I and Vol. II.

141. General Electric Company, Space Power and Propulsion Section, Alkali Metals Boiling and Condensing Investigations, Quarterly Progress Report No. 6 Covering the Period October 1 to December 31, 1963, Vol. I and Vol. II, NASA-CR-54037.

142. General Electric Company, Space Power and Propulsion Section, Alkali Metals Boiling and Condensing Investigations, Quarterly Progress Report 7 Covering Period January 1 thru March 31, 1964, NASA-CR-54038.

143. General Electric Company, Space Power and Propulsion Section, Alkali Metals Boiling and Condensing Investigations, Quarterly Progress Report 8 Covering Period April 1 through June 30, 1964, NASA-CR-54138.

144. General Electric Company, Space Power and Propulsion Section, Alkali Metals Boiling and Condensing Investigations, Quarterly Progress Report 9 Covering Period June 30 thru September 30, 1964, NASA-CR-54215.

Potassium Bibliography (continued)

General Electric Space Power and Propulsion Section--Alkali Metals Boiling and Condensing Investigations (continued)

145. General Electric Company, Space Power and Propulsion Section, Alkali Metals Boiling and Condensing Investigations, Quarterly Progress Report No. 10 Covering Period October 1 thru December 31, 1964, NASA-CR-54308.

146. General Electric Company, Space Power and Propulsion Section, Alkali Metals Boiling and Condensing Investigations, Quarterly Progress Report 11 Covering Period January 1 thru March 31, 1965, NASA-CR-54405.

147. General Electric Company, Space Power and Propulsion Section, Alkali Metals Boiling and Condensing Investigations, Quarterly Progress Report 12 Covering Period April 1 thru June 30, 1965, NASA-CR-54739.

148. General Electric Company, Space Power and Propulsion Section, Alkali Metals Boiling and Condensing Investigations, Quarterly Progress Report 13 Covering Period July 1 thru September 30, 1965, NASA-CR-54890.

General Electric Space Power and Propulsion Section--Potassium Corrosion Test Loop Development

149. E. E. Hoffman and J. Holowach, New Components for Refractory Metal--Alkali Metal Corrosion Test Systems,pp. 149–214, AEC-NASA Liquid Metals Information Meeting, Gatlinburg, Tennessee, USAEC Report CONF-650411, April 1965.

150. T. F. Lyon, Purification and Analysis of Helium for the Welding Chamber, Topical Report, NASA-CR-54158, July 1, 1965.

151. R. G. Frank, D. N. Miketta, W. H. Kearns, W. R. Young, and R. B. Hand, Materials and Process Specifications for Refractory Alloy and Alkali Metals, Topical Report, R66SD3007, December 13, 1965.

152. D. N. Miketta and R. G. Frank, Materials Specifications for Advanced Refractory Alloys, Topical Report, NASA-CR-54761, October 1, 1965.

153. L. E. Dotson and R. B. Hand, Purification, Analysis, and Handling of Sodium and Potassium, Topical Report, R66SD3012, June 13, 1966.

154. General Electric Company, Space Power and Propulsion Section, Potassium Corrosion Test Loop Development, Quarterly Progress Report No. 1 for Quarter Ending October 15, 1963.

Potassium Bibliography (continued)

General Electric Space Power and Propulsion Section--Potassium Corrosion Test Loop Development (continued)

155. General Electric Company, Space Power and Propulsion Section, Potassium Corrosion Test Loop Development, Quarterly Progress Report No. 2 for Quarter Ending January 15, 1963, NASA-CR-54008.

156. General Electric Company, Space Power and Propulsion Section, Potassium Corrosion Test Loop Development, Quarterly Progress Report No. 3 for Quarter Ending April 15, 1964, NASA-CR-54081.

157. General Electric Company, Space Power and Propulsion Section, Potassium Corrosion Test Loop Development, Quarterly Progress Report No. 4 for Quarter Ending July 15, 1964, NASA-CR-54167.

158. General Electric Company, Space Power and Propulsion Section, Potassium Corrosion Test Loop Development, Quarterly Progress Report No. 5 for Quarter Ending October 15, 1965, NASA-CR-54269.

159. General Electric Company, Space Power and Propulsion Section, Potassium Corrosion Test Loop Development, Quarterly Progress Report No. 6 for Quarter Ending January 15, 1965, NASA-CR-54344.

160. General Electric Company, Space Power and Propulsion Section, Potassium Corrosion Test Loop Development, Quarterly Progress Report No. 7 for Quarter Ending April 15, 1965, NASA-CR-54735.

161. General Electric Company, Space Power and Propulsion Section, Potassium Corrosion Test Loop Development, Quarterly Progress Report No. 8 for Quarter Ending July 15, 1965, NASA-CR-54843.

162. General Electric Company, Space Power and Propulsion Section, Potassium Corrosion Test Loop Development, Quarterly Progress Report No. 9 for Quarter Ending October 15, 1965, NASA-CR-54912.

163. General Electric Company, Space Power and Propulsion Section, Potassium Corrosion Test Loop Development, Quarterly Progress Report No. 10 for Quarter Ending January 15, 1966, NASA-CR-54990.

164. General Electric Company, Space Power and Propulsion Section, Potassium Corrosion Test Loop Development, Quarterly Progress Report No. 11 for Quarter Ending April 15, 1966, NASA-CR-72042.

Potassium Bibliography (continued)

General Electric Space Power and Propulsion Section--Advanced Refractory Alloy Corrosion Loop Program

165. General Electric Company, Space Power and Propulsion Section, Advanced Refractory Alloy Corrosion Loop Program, Quarterly Progress Report No. 1 for Quarter Ending July 15, 1965, NASA-CR-54477.

166. General Electric Company, Space Power and Propulsion Section, Advanced Refractory Alloy Corrosion Loop Program, Quarterly Progress Report No. 2 for Quarter Ending October 15, 1965, NASA-CR-54845.

167. General Electric Company, Space Power and Propulsion Section, Advanced Refractory Alloy Corrosion Loop Program, Quarterly Progress Report No. 3 for Quarter Ending January 15, 1966, NASA-CR-54911.

168. General Electric Company, Space Power and Propulsion Section, Advanced Refractory Alloy Corrosion Loop Program, Quarterly Progress Report No. 4 for Quarter Ending April 15, 1966, NASA-CR-72029.

169. General Electric Company, Space Power and Propulsion Section, Advanced Refractory Alloy Corrosion Loop Program, Quarterly Progress Report No. 5 for Quarter Ending July 15, 1966, NASA-CR-72057.

170. General Electric Company, Space Power and Propulsion Section, Advanced Refractory Alloy Corrosion Loop Program, Quarterly Progress Report No. 6 for Quarter Ending October 15, 1966, NASA-CR-72177.

General Electric Space Power and Propulsion Section--Electromagnetic Alkali Metal Pump Research Program

171. J. P. Verkamp, R. G. Rhudy, Electromagnetic Alkali Metal Pump Research Program, Final Report, NASA-CR-380, General Electric Company, Cincinnati, Ohio, February 1966.

172. R. G. Rhudy and J. P. Verkamp, Selecting Electromagnetic Pumps for Rankine Cycle Space Power Systems, pp. 201–221 in AIAA Specialists Conference on Rankine Space Power Systems, Vol. I, USAEC Report CONF-651026.

173. General Electric Company, Space Power and Propulsion Section, Electromagnetic Alkali Metal Pump Research Program, Quarterly Report 1, June 26 thru September 27, 1963, NASA-CR-55103.

Potassium Bibliography (continued)

General Electric Space Power and Propulsion Section--Electromagnetic Alakli Metal Pump Research Program (continued)

174. General Electric Company, Space Power and Propulsion Section, Electromagnetic Alkali Metal Pump Research Program, Quarterly Report 2, September 27 thru December 27, 1963, NASA-CR-54019.

175. General Electric Company, Space Power and Propulsion Section, Electromagnetic Alkali Metal Pump Research Program, Quarterly Report 3, December 27, 1963 thru March 27, 1964, NASA-CR-54036.

General Electric Space Power and Propulsion Section--Rotary Seals

176. E. Schnetzer, H. Ernst, J. M. McGrew, and T. A. Phillips, Design Criteria for Rotary Seals for a Space Environment, Part I. Rotating Fluid Ring Seal Evaluation, Part II. Screw Seal Evaluation, Report AFAPL-TR-65-89, General Electric Space Power and Propulsion Section, September 1965.

General Electric Space Power and Propulsion Section--Potassium Lubricated Journal Bearings

177. R. G. Frank, General Electric Space Power and Propulsion Section, Materials for Potassium Lubricated Journal Bearings, Quarterly Progress Report No. 1 for Quarter Ending July 22, 1963, NASA-CR-54006.

178. R. G. Frank, General Electric Space Power and Propulsion Section, Materials for Potassium Lubricated Journal Bearings, Quarterly Progress Report No. 2 for Quarter Ending October 22, 1963, NASA-CR-54007.

179. R. G. Frank, General Electric Space Power and Propulsion Section, Materials for Potassium Lubricated Journal Bearings, Quarterly Progress Report No. 3 for Quarter Ending January 22, 1964, NASA-CR-54073.

180. R. G. Frank, General Electric Space Power and Propulsion Section, Materials for Potassium Lubricated Journal Bearings, Quarterly Progress Report No. 4 for Quarter Ending April 22, 1964, NASA-CR-54113.

181. R. G. Frank, General Electric Space Power and Propulsion Section, Materials for Potassium Lubricated Journal Bearings, Quarterly Progress Report No. 5 for Quarter Ending July 22, 1964, NASA-CR-54169.

Potassium Bibliography (continued)

General Electric Space Power and Propulsion Section--Potassium Lubricated Journal Bearings (continued)

182. R. G. Frank, General Electric Space Power and Propulsion Section, Materials for Potassium Lubricated Journal Bearings, Quarterly Progress Report No. 6 for Quarter Ending October 22, 1964, NASA-CR-54264.

183. R. G. Frank, General Electric Space Power and Propulsion Section, Materials for Potassium Lubricated Journal Bearings, Quarterly Progress Report No. 7 for Quarter Ending January 22, 1965, NASA-CR-54345.

184. R. G. Frank, General Electric Space Power and Propulsion Section, Materials for Potassium Lubricated Journal Bearings, Quarterly Progress Report No. 8 for Quarter Ending April 22, 1965, NASA-CR-54646.

185. R. G. Frank, General Electric Space Power and Propulsion Section, Materials for Potassium Lubricated Journal Bearings, Quarterly Progress Report No. 9 for Quarter Ending July 22, 1965, NASA-CR-54892.

186. R. G. Frank, General Electric Space Power and Propulsion Section, Materials for Potassium Lubricated Journal Bearings, Quarterly Progress Report No. 10 for Quarter Ending October 22, 1965, NASA-CR-72027.

187. R. G. Frank, General Electric Space Power and Propulsion Section, Materials for Potassium Lubricated Journal Bearings, Quarterly Progress Report No. 11 for Quarter Ending January 22, 1966, NASA-CR-72028.

188. R. G. Frank, General Electric Space Power and Propulsion Section, Materials for Potassium Lubricated Journal Bearings, Quarterly Progress Report No. 12 for Quarter Ending April 22, 1966, NASA-CR-72041.

General Electric Space Power and Propulsion Section--Hydrodynamic Journal Bearing

189. J. D. McHugh, H. E. Nichols, W. D. C. Richards, and H. C. Lee, Hydrodynamic Journal Bearing Program Quarterly Progress Report No. 1 for Period: May 29, 1965 thru July 29, 1965, General Electric Space Power and Propulsion Section, NASA-CR-54792.

Potassium Bibliography (continued)

General Electric Space Power and Propulsion Section--Hydrodynamic Journal Bearing (continued)

190. J. D. McHugh, H. E. Nichols, W. D. C. Richards, and H. C. Lee, Hydrodynamic Journal Bearing Program Quarterly Progress Report No. 2 for Period: July 29, 1965 thru October 29, 1965, General Electric Space Power and Propulsion Section, NASA-CR-72033.

191. J. D. McHugh, H. E. Nichols, and W. D. C. Richards, Hydrodynamic Journal Bearing Program Quarterly Progress Report No. 3 for Period: October 29, 1965 thru January 29, 1966, General Electric Space Power and Propulsion Section, NASA-CR-72034.

192. H. E. Nichols, R. J. Rossbach, W. H. Bennethum, J. C. Amos, and W. D. C. Richards, Hydrodynamic Journal Bearing Program Quarterly Progress Report No. 4 for Period: January 29, 1966 thru April 29, 1966, NASA-CR-72068.

193. Hydrodynamic Journal Bearing Program Quarterly Progress Report No. 5 for Period: April 29 thru July 29, 1966, General Electric Space Power and Propulsion Section, NASA-CR-72160 (to be published).

194. Hydrodynamic Journal Bearing Program Quarterly Progress Report No. 6 for Period: July 29, 1966 thru October 29, 1966, General Electric Space Power and Propulsion Section, NASA-CR-72175 (to be published).

Jet Propulsion Laboratory--Lithium-Boiling Potassium Refractory Metal Loop

195. J. P. Davis et al., Lithium-Boiling Potassium Refractory Metal Loop Facility, Jet Propulsion Laboratory, Technical Report No. 32-508, August 31, 1963.

196. J. P. Davis et al., Lithium-Boiling Potassium Refractory Metal Loop Facility, pp. 171–193 in Proceedings of 1963 High-Temperature Liquid-Metal Heat Transfer Technology Meeting, USAEC Report ORNL-3605, Oak Ridge National Laboratory, November 1964.

National Aeronautics and Space Administration

197. C. M. Scheuerman, Summary of the Potassium-Refractory Metal Corrosion Capsule Program at NASA Lewis Research Center, AEC-NASA Liquid Metals Information Meeting, Gatlinburg, Tennessee, USAEC Report CONF-650411, p. 235, April 1965.

Potassium Bibliography (continued)

National Aeronautics and Space Administration (continued)

198. O. A. Gutierrez, N. J. Sekas, L. W. Acker, and D. B. Fenn, Potassium Condensing Tests of Horizontal Multitube Convective and Radiative Condensers Operating at Vapor Temperatures of 1250 to 1500°F, pp. 694–715 in AIAA Specialists Conference on Rankine Space Power Systems, Vol. I, USAEC Report CONF-651026, October 1965.

199. L. J. Goldman and S. M. Nosek, Experimental Nozzle Expansion and Flow Characteristics of Potassium-Vapor, NASA-TN-D-3209, January 1966.

200. H. C. Haller et al., Analysis and Evaluation of a Vapor Chamber Fin-Tube Radiator for High Power Rankine Cycles, NASA-TND-2836, May 1965.

201. H. C. Haller et al., Analysis of Double Fin Tube Flat Condenser Radiator and Comparison with a Central Fin Tube Radiator, NASA-TN-D-2558, December 1964.

202. H. C. Haller and S. Lieblan, Feasibility Studies of Space Radiators Using Vapor Chamber Fins, NASA TM-X-52219, June 1966.

203. R. L. Johnson, Weight Studies of Partially Segmented Direct Condensing Radiator for Large Space Power Systems, NASA TN-D-3227, January 1966.

204. R. P. Krebs, Analysis of Megawatt Level Direct Condensing Radiator, Power Systems for Space, N. Y. Academic Press, pp. 475–504, September 1962.

205. H. C. Haller et al., Analysis of Low Temperature Direct Condensing Vapor Chamber Fin and Conducting Fin Radiators, NASA TN-D-3103, November 1965.

206. T. W. Nyland, Feasibility of Using Throttling Calorimeter for Liquid Metal Vapor Quality Measurements, NASA TN-D-2802, May 1965.

Oak Ridge National Laboratory

207. A.P. Fraas et al., A Comparative Study of Fission-Reactor-Turbine-Generator Power Sources for Space Vehicles, USAEC Report ORNL-2768, Oak Ridge National Laboratory, September 1961.

208. A. P. Fraas, The Boiling Potassium Reactor System for Space Power Applications, USAEC Report ORNL-4048, Oak Ridge National Laboratory, September 8, 1966. (Classified).

Potassium Bibliography (continued)

Oak Ridge National Laboratory (continued)

209. A. P. Fraas, The MPRE--A Boiling Potassium Reactor System, Space Power Systems Engineering, Academic Press, New York, 1966, pp. 525–540.

210. A. P. Fraas, The MPRE--A Boiling Potassium Reactor System, Third AIAA Aerospace Power Systems Conference, Philadelphia, September 1–4, 1964, USAEC Report TID-7703. (Classified).

211. A. P. Fraas, Survey of Operating Conditions and Requirements for Nuclear Reactor Turbine-Generator Space Power Plants for the 1970–1985 Period, USAEC Report ORNL-TM-1364, Oak Ridge National Laboratory, January 1966. (Classified).

212. A. P. Fraas and J. W. Michel, Comparison of 1-, 2-, and 3-Loop Systems for Nuclear Turbine-Generator Space Power Plants of 300 kw to 5 Mw of Electrical Output, USAEC Report ORNL-TM-1366, Oak Ridge National Laboratory, February 1966. (Classified).

213. A. P. Fraas, J. W. Michel, A. M. Perry, O. L. Smith, and J. W. Wilson, Design Study of Boiling Potassium Reactors for Thermal Outputs of 1 Mw to 30 Mw, USAEC Report ORNL-TM-1365, Oak Ridge National Laboratory, April 1966. (Classified).

Oak Ridge National Laboratory--Heat Transfer

214. A. P. Fraas, Flow Stability in Heat Transfer Matrices Under Boiling Conditions, USAEC Report ORNL-CF-59-11-1, Oak Ridge National Laboratory, November 1959.

215. H. W. Hoffman and A. I. Krakoviak, Forced Convection Saturation Boiling of Potassium at Near Atmospheric Pressure, p. 182 in Proceedings of the 1962 High-Temperature Liquid Metals Heat Transfer Technology Meeting, USAEC Report BNL-756, Brookhaven National Laboratory.

216. H. W. Hoffman and A. I. Krakoviak, Convective Boiling with Liquid Potassium, p. 19 in Proceedings of the 1964 Fluid Mechanics Institute, Stanford University Press, 1964.

217. H. W. Hoffman, Recent Experimental Results in ORNL Studies With Boiling Potassium, pp. 334–350 in Proceedings of 1963 High-Temperature Liquid-Metal Heat Transfer Technology Meeting, USAEC Report ORNL-3605, Oak Ridge National Laboratory, November 1964.

Potassium Bibliography (continued)

Oak Ridge National Laboratory--Heat Transfer (continued)

218. H. W. Hoffman and A. I. Krakoviak, Studies in Boiling with Liquid Potassium, pp. 3.5.1–3.5.12 in Proceedings of the Second Joint USAEC-EURATOM Two-Phase Flow Meeting, USAEC Report CONF-640507, November 1964.

219. A. I. Krakoviak, Notes on the Liquid-Metal Boiling Phenomenon, USAEC Report ORNL-TM-618, Oak Ridge National Laboratory, July 1963.

220. J. A. Edwards, Superheat with Boiling Alkali Metals, USAEC Report ORNL-CF-64-10-1, Oak Ridge National Laboratory, October 1964.

221. A. I. Krakoviak, Superheat Requirements with Boiling Liquid Metals, pp. 310–333 in Proceedings of 1963 High-Temperature Liquid-Metal Heat Transfer Technology Meeting, USAEC Report ORNL-3605, Oak Ridge National Laboratory, November 1964.

222. Studies of Heat Transfer and Fluid Mechanics, Progress Report for Period January 1 – September 30, 1963, USAEC Report ORNL-TM-915, Oak Ridge National Laboratory, October 1964: A. I. Krakoviak and H. W. Hoffman, Boiling Potassium Heat Transfer, pp. 5–26; J. L. Wantland, Water Boiling in a Multirod Geometry, pp. 27–30; J. W. Cooke, Thermophysical Properties, Alkali Liquid Metals, pp. 97–107.

223. Studies in Heat Transfer and Fluid Mechanics, Progress Report for Period October 1, 1963 – June 30, 1964, USAEC Report ORNL-TM-1148, Oak Ridge National Laboratory, August 1965: A. I. Krakoviak and H. W. Hoffman, Boiling Potassium Heat Transfer, pp. 2–28; L. G. Alexander, Boiling in Multirod Geometries, pp. 29–31; T. C. Min, Analysis of Parallel Flow in Rod Clusters, pp. 50–63; J. W. Cooke, Thermophysical Properties, Alkali Liquid Metals, pp. 114–123.

224. J. A. Edwards and H. W. Hoffman, Superheat with Boiling Alkali Metals, in Proceedings of Conference on Application of High-Temperature Instrumentation to Liquid Metal Experiments, USAEC Report ANL-7100, Argonne National Laboratory, December 1965.

225. R. P. Wichner and H. W. Hoffman, Pressure Drop with Forced-Convection Boiling of Potassium, in Proceedings of Conference on Application of High-Temperature Instrumentation to Liquid Metal Experiments, USAEC Report ANL-7100, Argonne National Laboratory, December 1965.

Potassium Bibliography (continued)

Oak Ridge National Laboratory--Heat Transfer (continued)

226. M. M. Yarosh, Boiling Studies for the Medium Power Reactor Experiment, pp. 88–104 in AIAA Specialists Conference on Rankine Space Power Systems, Vol. II, USAEC Report TID-22508, October 1965. (Classified.)

227. R. P. Wichner, Vapor-Bubble Growth Rates in Superheated Liquid Metals, USAEC Report ORNL-TM-1413, Oak Ridge National Laboratory, July 1966.

Oak Ridge National Laboratory--Materials

228. D. H. Jansen and E. E. Hoffman, Type 316 Stainless Steel, Inconel, and Haynes Alloy No. 25 Natural-Circulation Boiling Potassium Corrosion Test Loops, USAEC Report ORNL-3790, Oak Ridge National Laboratory, June 1965.

229. D. H. Jansen and E. E. Hoffman, Niobium–1% Zirconium, Natural Circulation Boiling-Potassium Corrosion Loop Test, USAEC Report ORNL-3603, Oak Ridge National Laboratory, May 1964.

230. J. H. DeVan, Compatibility of Structural Materials with Boiling Potassium, USAEC Report ORNL-TM-1361, Oak Ridge National Laboratory, April 1966. (Classified.)

231. J. H. DeVan, J. R. DiStefano, and D. H. Jansen, Compatibility of Refractory Metals with Boiling Alkali Metals, Transactions of American Nuclear Society, pp. 390–391, Vol. 8, No. 2, 1965.

232. J. H. DeVan, J. R. DiStefano, A. P. Litman, and C. E. Sessions, Lithium and Potassium Corrosion Studies with Refractory Metals, USAEC Report ORNL-TM-1673, Oak Ridge National Laboratory, December 1966.

233. J. R. DiStefano and D. H. Jansen, Refractory Metal-Boiling Potassium Compatibility Studies, in AEC-NASA Liquid Metals Information Meeting, USAEC Report CONF-650411, pp. 316–322, April 1965.

Oak Ridge National Laboratory--Turbine Pump and Turbine Generator

234. W. R. Chambers, A. P. Fraas, and M. N. Ozisik, A Potassium-Steam Binary Vapor Cycle for Nuclear Power Plants, USAEC Report ORNL-3584, Oak Ridge National Laboratory, May 1964.

Potassium Bibliography (continued)

Oak Ridge National Laboratory--Turbine Pump and Turbine Generator (continued)

235. L. V. Wilson, H. C. Young, and A. M. Smith, Experience with Turbine-Driven Potassium Boiler-Feed Pumps for the MPRE, pp. 258–282, in AIAA Specialists Conference on Rankine Space Power Systems, Vol. I, USAEC Report CONF-651026, October 1965.

Oak Ridge National Laboratory--Jet Pumps

236. R. S. Holcomb, M. E. Lackey, and F. E. Lynch, Performance of Experimental Jet Pumps Under Noncavitating and Cavitating Conditions, USAEC Report ORNL-3745, Oak Ridge National Laboratory, January 1966. (Classified.)

Oak Ridge National Laboratory--Electromagnetic Pumps

237. W. R. Huntley and A. G. Grindell, Performance and Cavitation Characteristics of Two Helical Induction Electromagnetic Pumps Operating with Potassium, USAEC Report ORNL-TM-1793 (to be published).

Oak Ridge National Laboratory--Condenser Radiator

238. A. P. Fraas, Radiators for Space Power Plants, USAEC Report ORNL-CF-59-8-31, Oak Ridge National Laboratory, August 1959.

239. A. P. Fraas, Improved Heat Sink for Space Vehicles, USAEC Report ORNL-CF-59-1-21, Oak Ridge National Laboratory, January 1959.

240. P. G. Lafyatis, Effect of Temperature on Radiator Weight for Space Vehicle Power Plants, USAEC Report ORNL-CF-60-1-109, Oak Ridge National Laboratory, January 1960.

241. R. B. Korsmeyer, Condensing Flow in Finned, Tapered Tubes, USAEC Report ORNL-TM-534, Oak Ridge National Laboratory, May 1963.

242. A. P. Fraas, Design and Development Tests of Direct-Condensing Potassium Radiators, pp. 716–736 in AIAA Specialists Conference on Rankine Space Power Systems, Vol. I, USAEC Report CONF-651026, October 1965.

243. R. S. Holcomb and F. E. Lynch, Thermal Performance of a Finned-Radiator Tube with a Reflector, USAEC Report ORNL-TM-1613, Oak Ridge National Laboratory (to be published).

Potassium Bibliography (continued)

Oak Ridge National Laboratory--System Stability and Control

244. M. M. Yarosh, Stability and Control Characteristics of Electrically Heated Test Rigs Designed to Simulate the MPRE Fluid System, USAEC Report ORNL-TM-1370, Oak Ridge National Laboratory, February 1966.

Oak Ridge National Laboratory--System Endurance Tests

245. R. E. MacPherson and A. P. Fraas, Potassium Rankine Cycle Operating Experience for the Medium-Power Reactor Experiment, pp. 11–34 in AIAA Specialists Conference on Rankine Space Power Systems, Vol. II, USAEC Report TID-22508, October 1965. (Classified.)

246. H. J. Metz and M. M. Yarosh, Experiences and Developments in Instrumentation for Liquid Metal Experiments, Proceedings of the Fourth High-Temperature Liquid-Metal Heat Transfer Technology Conference held September 28–29, 1965, Argonne National Laboratory, USAEC Report ANL-7100.

247. M. M. Yarosh and P. A. Gnadt, The Intermediate Potassium System--A Rankine Cycle, Potassium Test Facility, USAEC Report ORNL-4025, Oak Ridge National Laboratory (to be published).

248. M. M. Yarosh and S. E. Bolt, The Intermediate Water System--A Rankine Cycle Test Facility, USAEC Report ORNL-TM-1614, Oak Ridge National Laboratory (to be published).

Oak Ridge National Laboratory--Space Power Program Progress Reports

249. Oak Ridge National Laboratory, Space Power Program Progress Report for Period Ending December 31, 1961, USAEC Report ORNL-3270. (Classified.)

250. Oak Ridge National Laboratory, Space Power Program Progress Report for Period Ending June 30, 1962, USAEC Report ORNL-3337. (Classified.)

251. Oak Ridge National Laboratory, Space Power Program Progress Report for Period Ending December 31, 1962, USAEC Report ORNL-3420. (Classified.)

252. Oak Ridge National Laboratory, Space Power Program Progress Report for Period Ending June 30, 1963, USAEC Report ORNL-3489. (Classified.)

Potassium Bibliography (continued)

Oak Ridge National Laboratory--Space Power Program Progress Reports (continued)

253. Oak Ridge National Laboratory, Space Power Program Progress Report for Period Ending December 31, 1963, USAEC Report ORNL-3571. (Classified.)

254. Oak Ridge National Laboratory, Space Power Program Progress Report for Period Ending June 30, 1964, USAEC Report ORNL-3683. (Classified.)

Oak Ridge National Laboratory--Medium Power Reactor Experiment Progress Reports

255. Oak Ridge National Laboratory, Medium-Power Reactor Experiment Progress Report for Period July 1, 1963 to September 30, 1963, USAEC Report ORNL-3534. (Classified.)

256. Oak Ridge National Laboratory, Medium-Power Reactor Experiment Progress Report for Period January 1, 1964 to March 31, 1964, USAEC Report ORNL-3641. (Classified.)

257. Oak Ridge National Laboratory, Medium-Power Reactor Experiment Progress Report for Period Ending September 30, 1964, USAEC Report ORNL-3748. (Classified.)

258. Oak Ridge National Laboratory, Medium-Power Reactor Experiment Progress Report for Period Ending December 31, 1964, USAEC Report ORNL-3774. (Classified.)

259. Oak Ridge National Laboratory, Medium-Power Reactor Experiment Progress Report for Period Ending March 31, 1965, USAEC Report ORNL-3818. (Classified.)

260. Oak Ridge National Laboratory, Medium-Power Reactor Experiment Progress Report for Period Ending June 30, 1965, USAEC Report ORNL-3860. (Classified.)

261. Oak Ridge National Laboratory, Medium-Power Reactor Experiment Progress Report for Period Ending September 30, 1965, USAEC Report ORNL-3897. (Classified.)

262. Oak Ridge National Laboratory, Medium-Power Reactor Experiment Progress Report for Period Ending December 31, 1965, USAEC Report ORNL-3937. (Classified.)

Potassium Bibliography (continued)

Oak Ridge National Laboratory--Medium Power Reactor Experiment Progress Reports (continued)

263. Oak Ridge National Laboratory, Medium-Power Reactor Experiment Progress Report for Period Ending March 31, 1966, USAEC Report ORNL-3976. (Classified.)

264. Oak Ridge National Laboratory, Medium-Power Reactor Experiment Progress Report for Period Ending June 30, 1966, USAEC Report ORNL-4018, November 1966. (Classified.)

Oak Ridge National Laboratory--High-Temperature Materials Program Progress Reports

265. Oak Ridge National Laboratory, High-Temperature Materials Program Quarterly Progress Report for Period Ending October 31, 1964, USAEC Report ORNL-TM-980. (Classified.)

266. Oak Ridge National Laboratory, High-Temperature Materials Program Quarterly Progress Report for Period Ending January 31, 1965, USAEC Report ORNL-TM-1050. (Classified.)

267. Oak Ridge National Laboratory, High-Temperature Materials Program Quarterly Progress Report for Period Ending April 30, 1965, USAEC Report ORNL-TM-1140. (Classified.)

268. Oak Ridge National Laboratory, High-Temperature Materials Program Quarterly Progress Report for Period Ending July 31, 1965, USAEC Report ORNL-TM-1300. (Classified.)

269. Oak Ridge National Laboratory, High-Temperature Materials Program Quarterly Progress Report for Period Ending October 31, 1965, USAEC Report ORNL-TM-1350. (Classified.)

270. Oak Ridge National Laboratory, High-Temperature Materials Program Quarterly Progress Report for Period Ending January 31, 1966, USAEC Report ORNL-TM-1455. (Classified.)

Pratt and Whitney (CANEL)

271. G. M. Wood, Status of SNAP-50/SPUR Pump Development Program, CNLM-6308, May 28, 1965.

272. R. S. Culp, J. V. Altieri, Cavitation Damage of Mechanical Pump Impellers Operating in Liquid Metal Space Power Loop, NASA-CR-165, July 1965.

Potassium Bibliography (continued)

Pratt and Whitney (CANEL) (continued)

273. R. S. Culp, J. V. Altieri, Investigation of Cavitation Damage of a Mechanical Pump Impeller in High-Temperature Potassium, Quarterly Progress Report No. 1, December 1, 1964 to February 28, 1965, NASA-CR-54383; Quarterly Progress Report No. 2, March 1, 1965 to July 2, 1965, NASA-CR-54440.

274. E. Bernstein et al., Experimental Results of Forced Convection Boiling Potassium Heat Transfer and Pressure Drop Tests, PWAC-429, July 1964.

275. G. W. Bersin, et al. Forced Convection Boiling Potassium Experiments, PWAC-430, December 1964.

276. Corrosion Studies of Refractory Metal Alloys in Boiling Potassium and Liquid NaK, pp. 374–393 in AEC-NASA Liquid Metals Information Meeting, USAEC Report CONF-650411, April 1965.

277. Bimonthly Progress Reports of Advanced Materials Program, March 1964 to February 1965, PWAC-1014 to 1019.

278. Bibliography of Connecticut Nuclear Engineering Laboratory Reports, Vol. I and II, PWAC-500, December 1965.

279. M. J. Wallace, Wear and Compatibility Behavior of Liquid Metal Bearings, presented at ASME Winter Meeting 1966, ASME Paper 66-WA/Lub-3.

280. G. M. Wood, D. V. Manfredi, and M. J. Wallace, Hydrodynamic Journal Bearing Tests in Molten Lithium, presented at ASME Winter Meeting 1966, ASME Paper 66-WA/Lub-6.

Rocketdyne Division of North American Aviation, Inc.--Determination of Working Fluid Lubrication Capability in Journal Bearings

281. Rocketdyne Division of North American Aviation, Inc., Determination of Working Fluid Lubrication Capability in Journal Bearings Quarterly Progress Report, Period Ending November 15, 1961, Report R-3159-1.

282. Rocketdyne Division of North American Aviation, Inc., Determination of Working Fluid Lubrication Capability in Journal Bearings Quarterly Progress Report, Period Ending February 15, 1962, Report R-3159-2.

Potassium Bibliography (continued)

Rocketdyne Division of North American Aviation, Inc.--Determination of Working Fluid Lubrication Capability in Journal Bearings (continued)

283. Rocketdyne Division of North American Aviation, Inc., Determination of Working Fluid Lubrication Capability in Journal Bearings Quarterly Progress Report, Period Ending May 15, 1962, Report R-3159-3.

284. J. Hall, R. Spies, Research in the Field of Liquid-Metal Lubricated Bearings, Technical Documentary Report, Rocketdyne, February 1964, Report RTD-TDR-63-4289, Part I.

285. J. Hall, R. Spies, Research in the Field of Liquid-Metal Lubricated Bearings, Technical Documentary Report, Rocketdyne, December 1964, Report RTD-TDR-63-4289, Part II.

286. J. Hall, R. Spies, Research in the Field of Liquid-Metal Lubricated Bearings, Technical Documentary Report, Rocketdyne, December 1965, Report RTD-TDR-63-4289, Part III.

287. R. Spies, Liquid Metal Test Facilities Energy Conversion Systems, Rocketdyne, September 1966, Internal Report No. ECR-66-8.

288. R. Spies, Results of a Test on a Potassium Vapor Turbine, Rocketdyne, October 1966, Internal Report No. ECR-66-10.

289. R. Spies and A. H. Cooke, Investigation of Variables in Turbine Erosion, Paper Presented at ASTM 69th Meeting, Atlantic City, June 1966.

Cesium Bibliography

Aerojet-General Nucleonics

290. P. F. Young et al., Cesium Corrosion and Thermophysical Properties Evaluation Programs, Final Report, AGN-8041 (Classified), Aerojet-General Nucleonics, for Period January 1961 to February 1962. [Also, AGN-8041 - deleted (Unclassified)].

291. P. F. Young et al., Rubidium Corrosion and Physical Properties Evaluation Program, Final Report, AGN-8034, Aerojet-General Nucleonics, February 1960 to May 1961.

292. Forced Convection Boiling of Rubidium and Cesium--Heat Transfer and Pressure Drop, Topical Report, AGN-8099, Aerojet-General Nucleonics, February 1964.

Cesium Bibliography (continued)

Aerojet-General Nucleonics (continued)

293. C. R. Fisher, J. H. Moskowitz, and L. T. Clark, Alkali Metals Evaluation Program, Swirl Flow Boiling of Alkali Metals--Heat Transfer and Pressure Drop, Topical Report, AGN-8127, Aerojet-General Nucleonics, January 1965.

294. C. R. Fisher, J. H. Moskowitz, Alkali Metals Evaluation Program, Forced Convection Condensing Heat Transfer for Rubidium and Cesium, Topical Report, AGN-8162, Aerojet-General Nucleonics, January 1966.

295. The Determination of the Latent Heat of Vaporization, Vapor Pressure, Enthalpy, Specific Heat, and Density of Liquid Rubidium and Cesium up to 1800°F, Topical Report, AGN-8090, Aerojet-General Nucleonics, January 1964.

296. P. Y. Achener et al., Alkali Metals Evaluation Program--Thermodynamic and Transport Properties of Cesium and Rubidium, Viscosity of Liquid Cesium and Rubidium, Topical Report, AGN-8192, Aerojet-General Nucleonics, Vol. 3, September 1966.

297. P. Y. Achener et al., Alkali Metals Evaluation Program--The Specific Heat of Liquid Cesium, Topical Report, AGN-8192, Aerojet-General Nucleonics, Vol. 5, September 1966.

Brookhaven National Laboratory

298. A. J. Romano, A. A. Fleitman, and C. J. Klamut, Behavior of Refractory Metals and Alloys in Boiling Sodium and Other Boiling Alkali Metals, BNL-10723, Brookhaven National Laboratory, 1966.

General Electric, Space Power and Propulsion Section

299. E. Schnetzer, Comparison Study of Cesium and Potassium for Rankine Cycle Space Power Systems, TMS Report No. 67-1, General Electric Space Power and Propulsion Section, July 1966.

National Aeronautics and Space Administration

300. W. L. Stewart, Analytical Investigation of Multistage-Turbine Efficiency Characteristics in Terms of Work and Speed Requirements, NACA-RM E57K22b, Lewis Flight Propulsion Laboratory, February 1958.

Cesium Bibliography (continued)

National Aeronautics and Space Administration (continued)

301. W. L. Stewart, A Study of Axial-Flow Turbine Efficiency Characteristics in Terms of Velocity Diagram Parameters, ASME Paper 61-WA-37.

302. T. P. Moffitt and F. W. Klag, Analytical Investigation of Cycle Characteristics for Advanced Turboelectric Space Power Systems, NASA-TN D-472, NASA--Lewis Research Center, October 1960.

303. A. J. Glassman and S. M. Futral, Analytical Study of Turbine-Geometry Characteristics for Alkali-Metal Turboelectric Space Power Systems, NASA-TN D-1710, NASA--Lewis Research Center, May 1963.

304. J. L. Klan and P. T. Kerwin, A Parametric Exploration of Axial-Flow Turbines for Rankine Cycle Space Power Plants in the Megawatt Range, NASA-TN D-2544, NASA--Lewis Research Center, December 1964.

305. A. J. Glassman, Alkali-Metal Turbine Geometry as Affected by Blade-Speed Limitations, NASA-TN D-2777, NASA--Lewis Research Center, April 1965.

Westinghouse Astronuclear Laboratory

306. Space Power Plant Study--Final Report NAS 5-250, WANL-PR-(B)-009, Westinghouse Electric Corporation Astronuclear Laboratory, December 31, 1963.

307. Space Power Plant Study Progress Report NAS 5-250, WANL-PR-(B)-008, Westinghouse Electric Corporation Astronuclear Laboratory, May 20, 1963.

308. Space Power Plant Study Progress Report NAS 5-250, WANL-PR-(B)-007, Westinghouse Electric Corporation Astronuclear Laboratory, February 20, 1963.

309. Basic Investigation of Turbine Erosion Phenomena, Quarterly Progress Report October thru December 1966, WANL-PR(DD)-017, Westinghouse Electric Corporation Astronuclear Laboratory, Contract NAS 7-390.

Cesium Bibliography (continued)

Battelle Memorial Institute--Thermophysical and Transport Properties

310. A. W. Lemmon et al., The Specific Heat, Thermal Conductivity, and Viscosity of Liquid Cesium, NASA CR-54018 or BATT-4673-T7, Battelle Memorial Institute, Contract NAS 5-584, February 1964.

Mine Safety Appliances Research Corporation--Thermophysical and Transport Properties

311. F. Tepper et al., Thermophysical and Transport Properties of Liquid Metals, Technical Report, AFML-TR-65-99, Mine Safety Appliances Research Corporation, Air Force Contract AF-33(657)-7659, May 1965.

Pratt and Whitney Aircraft--Thermophysical and Transport Properties

312. S. R. Kapelner and W. D. Bratton, The Electrical Resistivity of Sodium, Potassium, Rubidium, and Cesium in the Liquid State, PWAC-376, Pratt and Whitney Aircraft, AEC Contract AT(30-1)-2789, June 1962.

Southwest Research Institute--Thermophysical and Transport Properties

314. C. T. Ewing, et al., High-Temperature Properties of Cesium, NRL Report 6246, U.S. Naval Research Laboratory, September 24, 1965.

INTERNAL DISTRIBUTION

1. S. E. Beall
2. D. L. Burton, ORGDP
3. D. L. Clark
4. W. B. Cottrell
5. F. L. Culler
6. J. H. DeVan
7. J. R. DiStefano
8. B. Fleischer
9–28. A. P. Fraas
29. A. G. Grindell
30. W. O. Harms
31. P. N. Haubenreich
32. H. W. Hoffman
33. W. R. Huntley
34. D. H. Jansen
35. P. R. Kasten
36. R. L. Klueh
37. M. E. Lackey
38. J. A. Lane
39. W. J. Larkin, AEC-ORO
40. M. E. LaVerne
41. A. P. Litman
42. M. I. Lundin
43. R. N. Lyon
44. R. E. MacPherson
45. H. C. McCurdy
46. J. W. Michel
47. A. J. Miller
48. A. M. Perry
49. M. W. Rosenthal
50. G. Samuels
51. A. W. Savolainen
52. M. J. Skinner
53. I. Spiewak
54. D. B. Trauger
55. A. M. Weinberg
56. G. D. Whitman
57. L. V. Wilson
58–67. H. C. Young
68. ORNL Patent Office
69–70. Central Research Library (CRL)
71–72. Document Reference Section (DRS)
73–92. Laboratory Records (LRD)
93. Laboratory Records – Record Copy (LRD-RC)

EXTERNAL DISTRIBUTION

94. H. B. Finger, RN, NASA, Washington, D.C.
95. J. J. Lynch, RNP, NASA, Washington, D.C.
96–105. S. V. Manson, RNP, NASA, Washington, D.C.
106. F. Schulman, RNP, NASA, Washington, D.C.
107. W. H. Woodward, RN/D, NASA, Washington, D.C.
108. R. L. Cummings, SPSD, NASA-LRC, Cleveland, Ohio
109. R. E. English, SPSD, NASA-LRC, Cleveland, Ohio
110. J. A. Heller, SPSD, NASA-LRC, Cleveland, Ohio
111. B. Lubarsky, SPSD, NASA-LRC, Cleveland, Ohio
112. T. P. Moffitt, FSCD, NASA-LRC, Cleveland, Ohio
113. T. A. Moss, SPSD, NASA-LRC, Cleveland, Ohio
114. L. Rosenblum, M&SD, NASA-LRC, Cleveland, Ohio
115. W. L. Stewart, FSCD, NASA-LRC, Cleveland, Ohio
116. R. N. Weltmann, SPSD, NASA-LRC, Cleveland, Ohio
117. N. Grossman, DRD&T, AEC, Washington, D.C.
118. C. Johnson, SNS, AEC, Washington, D.C.
119. G. Leighton, SNS, AEC, Washington, D.C.
120. O. E. Dwyer, Brookhaven National Laboratory, Upton, N.Y.
121. D. H. Gurinsky, Brookhaven National Laboratory, Upton, N.Y.
122. J. Hadley, Lawrence Radiation Laboratory, Livermore, California
123. D. R. Bartz, Jet Propulsion Laboratory, Pasadena, California

EXTERNAL DISTRIBUTION (continued)

124. J. Davis, Jet Propulsion Laboratory, Pasadena, California
125. D. Elliot, Jet Propulsion Laboratory, Pasadena, California
126. L. Hays, Jet Propulsion Laboratory, Pasadena, California
127–130. M. A. Zipkin, General Electric Company, Cincinnati, Ohio
131–132 R. D. Gruntz, AiResearch, Phoenix, Arizona
133–134. W. D. Pouchot, Astronuclear Lab., Westinghouse Electric, Pittsburgh
135–136. V. R. Degner, Rocketdyne Division, N.A.A., Canoga Park, California
137–138. R. Gordon, SNAP-8 Division, Aerojet-General, Azusa, California
139. R. H. Chesworth, Aerojet-General Nucleonics, San Ramon, California
140. J. Edward Taylor, TRW, Inc., Cleveland, Ohio
141. H. D. Linhardt, Ford Aeronutronic, Newport Beach, California
142. C. L. Walker, Allison Division of General Motors, Indianapolis, Ind.
143. B. Sternlicht, Mechanical Technology Incorporated, Latham, New York
144. R. Myers, Pratt and Whitney Aircraft Corporation, E. Hartford, Conn.
145. S. Greenberg, Argonne National Laboratory, Argonne, Illinois
146. R. L. Eichelberger, Atomics International, Canoga Park, California
147. K. Goldmann, United Nuclear Corporation, White Plains, New York
148–162. Division of Technical Information Extension (DTIE)
163. Research and Development Division, ORO
164–165. Reactor Division, ORO