LOCKHEED MARTIN ENERGY RESEARCH LIBRARIES

CENTRAL RESEARCH LIBRARY
DOCUMENT COLLECTION

OAI 3 4456 0513457 4

LABORATORY
operated by
UNION CARBIDE CORPORATION
NUCLEAR DIVISION
for the
U.S. ATOMIC ENERGY COMMISSION

ORNL-TM-1979

COMPARATIVE EVALUATION OF SOL-GEL FUEL FABRICATION COSTS

T. W. Washburn
A. L. Lotts
F. E. Harrington

OAK RIDGE NATIONAL LABORATORY
CENTRAL RESEARCH LIBRARY
DOCUMENT COLLECTION
LIBRARY LOAN COPY
DO NOT TRANSFER TO ANOTHER PERSON
If you wish someone else to see this document, send in name with document and the library will arrange a loan.

NOTICE This document contains information of a preliminary nature and was prepared primarily for internal use at the Oak Ridge National Laboratory. It is subject to revision or correction and therefore does not represent a final report.

LEGAL NOTICE

This report was prepared as an account of Government sponsored work. Neither the United States, nor the Commission, nor any person acting on behalf of the Commission:

A. Makes any warranty or representation, expressed or implied, with respect to the accuracy, completeness, or usefulness of the information contained in this report, or that the use of any information, apparatus, method, or process disclosed in this report may not infringe privately owned rights; or

B. Assumes any liabilities with respect to the use of, or for damages resulting from the use of any information, apparatus, method, or process disclosed in this report.

As used in the above, "person acting on behalf of the Commission" includes any employee or contractor of the Commission, or employee of such contractor, to the extent that such employee or contractor of the Commission, or employee of such contractor prepares, disseminates, or provides access to, any information pursuant to his employment or contract with the Commission, or his employment with such contractor.

INTRA-LABORATORY CORRESPONDENCE

OAK RIDGE NATIONAL LABORATORY

February 6, 1968

To: Recipients of ORNL-TM-1979

Report No. : ORNL-TM-1979 Classification: Unclassified

Report Title: Comparative Evaluation of Sol-Gel Fuel Fabrication Costs

Author(s): T. N. Washburn, A. L. Lotts, F. E. Harrington

Action Requested: Please make the following change on the cover of your copy(ies) of the subject document:

T. A. Washburn should read T. N. Washburn

N. T. Bray, Supervisor
Laboratory Records Department

NTB:WCB:dbp

Central Research Library Document Collection
FEB 9 1968

UCN-430
(3 5-61)

ORNL-TM-1979

Contract No. W-7405-eng-26

METALS AND CERAMICS DIVISION

COMPARATIVE EVALUATION OF SOL-GEL FUEL FABRICATION COSTS*

T. N. Washburn and A. L. Lotts
Metals and Ceramics Division

and

F. E. Harrington
Chemical Technology Division

For presentation at the CNEN symposium on "Sol-Gel Processes for the Production of Ceramic Nuclear Fuels," Turin, Italy, October 2–3, 1967

SEPTEMBER 1967

OAK RIDGE NATIONAL LABORATORY
Oak Ridge, Tennessee
operated by
UNION CARBIDE CORPORATION
for the
U.S. ATOMIC ENERGY COMMISSION

---

*Research sponsored by the U.S. Atomic Energy Commission under contract with the Union Carbide Corporation.

LOCKHEED MARTIN ENERGY RESEARCH LIBRARIES

3 4456 0513457 4

CONTENTS

Page

Abstract 1

Introduction 1

Process Description 2

Fuel Preparation 4

Fabrication 7

Estimation Method 14

Fuel Preparation 14

Fabrication 15

Computer Code Description 19

Code Operation 25

Basic Economic Assumptions 28

Fuel Element Description 29

Industry Scale 29

Results of Cost Estimates 32

Fuel Preparation 32

Fabrication 36

Summary of Fuel Preparation and Fabrication Costs 48

Discussion of Results 48

References 51

COMPARATIVE EVALUATION OF SOL-GEL FUEL FABRICATION COSTS

T. N. Washburn, A. L. Lotts,
and F. E. Harrington

ABSTRACT

Estimates were made of the costs of fuel preparation and fabrication of sol-gel metal-clad $(U,Pu)O_2$ fuel elements. Four processes were compared, and their costs, including hardware, were: low-energy packing of microspheres, \$331/kg; vibratory compaction, \$337/kg; pelletizing, \$342/kg; and sol-gel extrusion, \$331/kg for 0.220-in.-diam UO_2–18% PuO_2. These costs include only the plant operating expenses and capital charges at a fixed annual rate of 22%. The hypothetical plant produces 500 kg of core fuel per day to support a fast reactor industry of 15,000 Mw (electrical). Costs of fuel material, fuel losses, inventory, and scrap recovery were not included, since they are the same for all the processes. Projected technology indicates little economic difference among the four processes, and each could be an excellent contender for production of fast reactor fuel. Continued development is needed to define more adequately the technical and economic capabilities and limitations of the four methods.

INTRODUCTION

Since the sol-gel process provides a variety of fuel materials for different fabrication schemes, it is most attractive for preparation of advanced reactor fuels. We are developing and evaluating various sol-gel-based methods of fuel preparation and fabrication that may be used to reduce the contributions of reactor fuel cycle costs to energy costs.

Since the ultimate goal of our research and development is a commercial process, economic factors must be considered carefully along with the technical capabilities and performance of the fuel materials. Thus, we begin economic evaluations when process feasibility is established and refine the economic study concurrently with the process development and product characterization. At first the economic estimate

is of uncertain accuracy, since so many areas of technology are unknown. As development proceeds and these areas are defined and problems are solved, the economic study is refined and cost uncertainty is reduced. There are several advantages to this approach. The choice between competing processes is more meaningful, since for a given quality level the process with the lowest cost is obviously desired. A guide is available for deciding which work should be pursued if funds are inadequate for all approaches. Since areas of high cost are identified early, one can seek process improvements to reduce these costs rather than discover at the end of the program that the process is not competitive.

Accordingly, we have assessed the economic merit of the sol-gel-based schemes being developed for preparing and fabricating oxide-fueled metal-clad elements for fast reactors. The four methods are microsphere loading by low-energy vibratory compaction (Sphere-Pac), loading of angular shards by high-energy vibratory compaction (Vi-Pac), pelletizing, and extrusion.

The chemical process development, fabrication, and irradiation programs are discussed in other papers at this symposium.[1–3]

PROCESS DESCRIPTION

The ORNL sol-gel process, shown simplified in Fig. 1, is quite versatile in terms of the fuel forms that derive directly and simply from it.

The sols, which are fluid at 2 M (and often higher concentrations), may be mixed to form homogeneous mixtures of materials such as ThO_2, PuO_2, and UO_2. These have all been used to form microspheres, which have been pyrolytically carbon coated or packed with low energy into fuel rods. Gels made from these sols may also be dried, crushed, and fired (at 1150°C for 1 hr for ThO_2) to produce high-density angular shards for high-energy vibratory compaction. The crushed gel can also be ground and calcined at about 200 to 400°C for 1 hr to produce a sinterable powder for fabrication into pellets. A fourth product, called sol-gel "clay," is formed by concentration of the sols. The concentrate has the general mechanical characteristics of a natural clay. Like all sol-gel materials, it is homogeneous and sinters at relatively low temperature.

ORNL-DWG 67-5318R

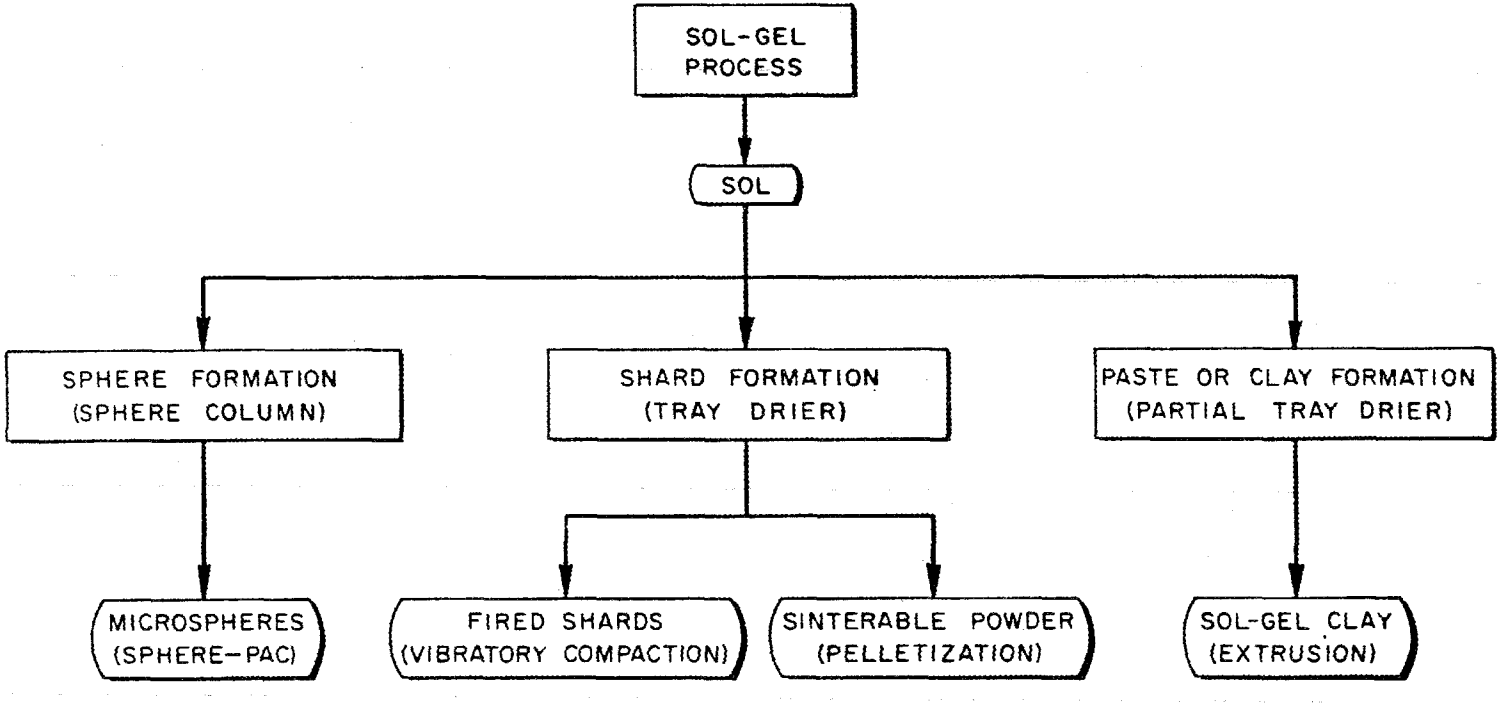

Fig. 1. Simplified Flowsheet of Sol-Gel Fuel Preparation Processes.

Our discussion of each topic will be in two parts: first, a discussion that pertains to the sol-gel preparation method, and second, a discussion that pertains to the subsequent fabrication.

Fuel Preparation

The sol-gel process consists of three major operations: sol preparation, gel formation, and firing at controlled conditions. Figure 2 outlines the alternate routes from the purified nitrate solutions to the desired products. Each numbered block represents a process step.

Sols are stable colloidal suspensions of 30- to 100-A-diam hydrated metal oxide particles.[4] They are fluid and can be combined to form homogeneous mixtures. This feature is a principal advantage over processes requiring mechanical mixing, adsorption, or coprecipitation. Uranyl and plutonium nitrate solutions, which come from aqueous processes for recycle of spent reactor fuel, are converted to stable sols in several steps: adjustment to the IV state, conversion to the hydrated oxide, removal of excess electrolyte, and dispersion as a sol. These steps can be combined in different orders and performed by a variety of methods. Several possible methods are discussed by McBride[1] and Haas.[2]

Sols can be gelled by water removal, change in electrolyte concentration, chemical reactions, and temperature changes. Gelation by removal of water simplifies handling, storing, and subsequent drying and firing. Water may be removed by a variety of methods; it is evaporated in tray driers to form shards and solvent extracted to form spheres.

Firing is necessary to remove volatile constituents and sinter the gel particles to a high density. The firing procedure depends on the starting material and the desired product. An inert or reducing atmosphere is required as a final step for products containing uranium. We have assumed that the fuel materials preparation facility delivers either high-fired microspheres, high-fired shards, sinterable powder, or an extrudable sol-gel clay to the fabrication portion of the plant.

The UO_2 sol used in step 1 of Fig. 2 for the preparation of spheres, shards, and powders is prepared by solvent extraction as shown in Fig. 3.

ORNL DWG 67-5233 R1

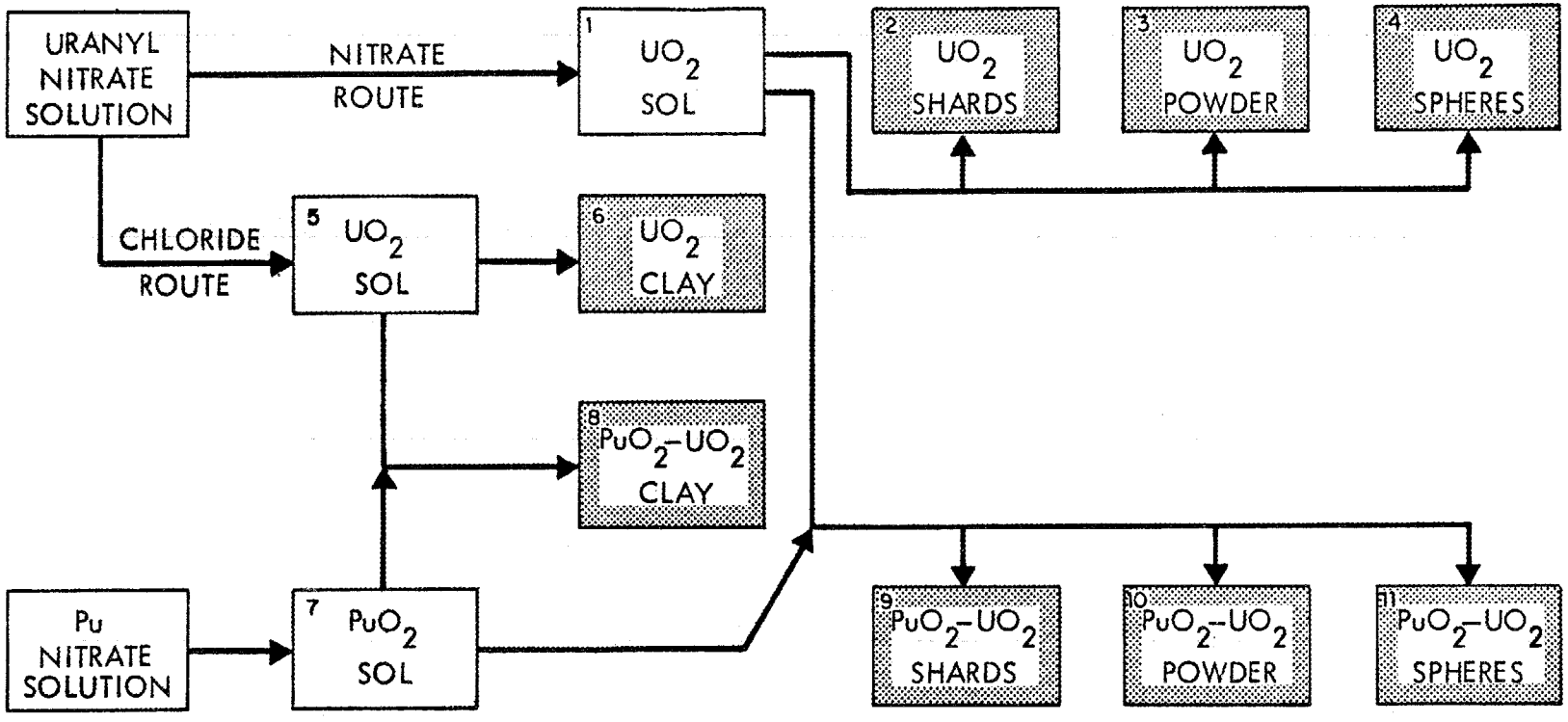

Fig. 2. Alternate Sol-Gel Fuel Material Preparation Routes.

ORNL DWG 67-5254

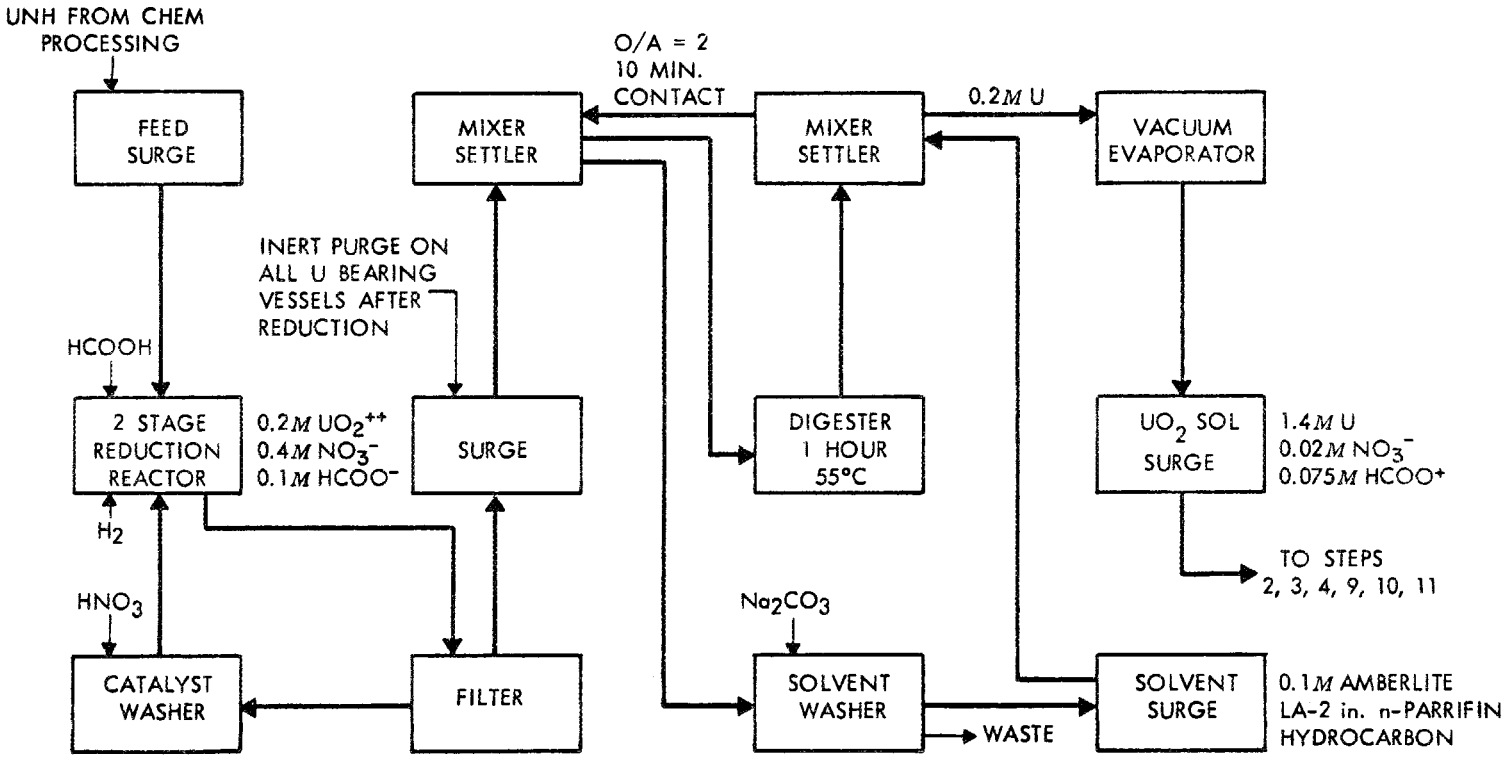

Fig. 3. Flowsheet for Production of UO_2 Sol-Gel by Solvent Extraction (Step 1).

No economic evaluation of the alternate precipitation-peptization process is presented, because we believe that solvent extraction approach can be more readily scaled to larger throughputs and adapted to remote operation.

Figure 4 is a simplified block diagram for steps 2 and 3, the preparation of UO_2 shards and powders, respectively. Figure 5 similarly shows the preparation of UO_2 microspheres, step 4.

Figure 6 presents the preparation of the plutonia sol, step 7. The sols produced by this procedure are stable indefinitely and are compatible in all ratios with our thoria and urania sols. A nitrate-rich plutonia sol is produced by the first peptization, and the nitrate level is reduced to an acceptable level by baking. This baking step has been demonstrated as a batch operation at the 200-g scale.

Steps 9, 10, and 11 parallel steps 2, 3, and 4 with the addition of a procedure for the mixing of the urania and plutonia sols. The presence of plutonium requires containment, criticality control, and shielding for these steps.

Figure 7 outlines the approach estimated for steps 5 and 6 to yield the extrudable UO_2 sol-gel clay product. One would prepare UO_2-PuO_2 similarly. The development of extrudable material is in an early stage. We believe the approach shown to be the most conservative of several alternate approaches under development. It probably exemplifies rather than defines the process that will finally be chosen.

Fabrication

Flowsheets for the four alternate fabrication processes are shown in Fig. 8. All fabrication steps from closure welding to the end of the process are the same for all four processes and are not shown in detail.

In the Sphere-Pac process, sintered microspheres are classified to assure the desired distribution for loading. The coarse microspheres (420 to 450 μ in diameter) are loaded to the desired fuel column height, and the fine microspheres (< 44 μ in diameter) are infiltrated into the existing void spaces as previously described. Low-energy vibration is sufficient to achieve the desired density of 85% of theoretical.[3] A porous stainless steel spacer separates core fuel (UO_2-PuO_2) from the

ORNL DWG 67-5270

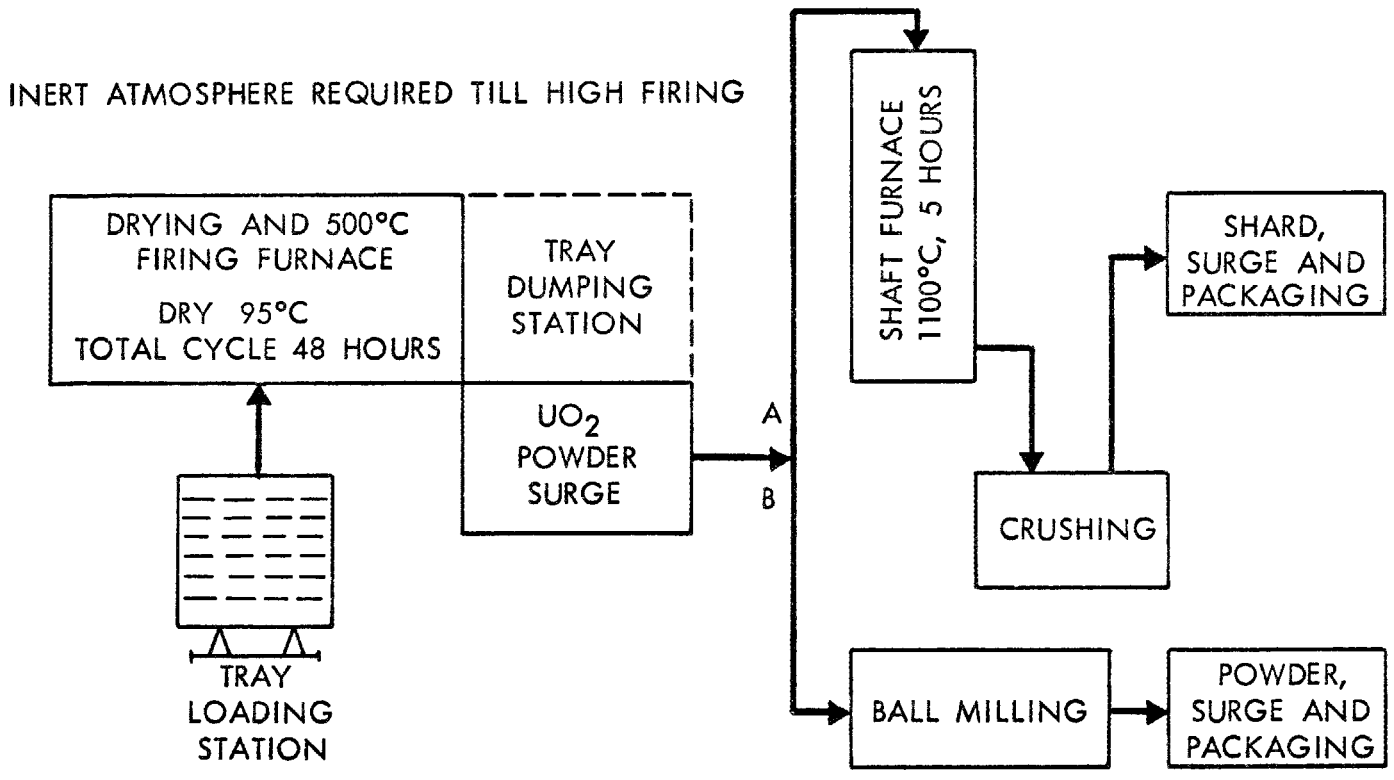

Fig. 4. Flowsheet for Production of Shards (A) and Powder (B), (Steps 2 and 3).

ORNL DWG 67-5272

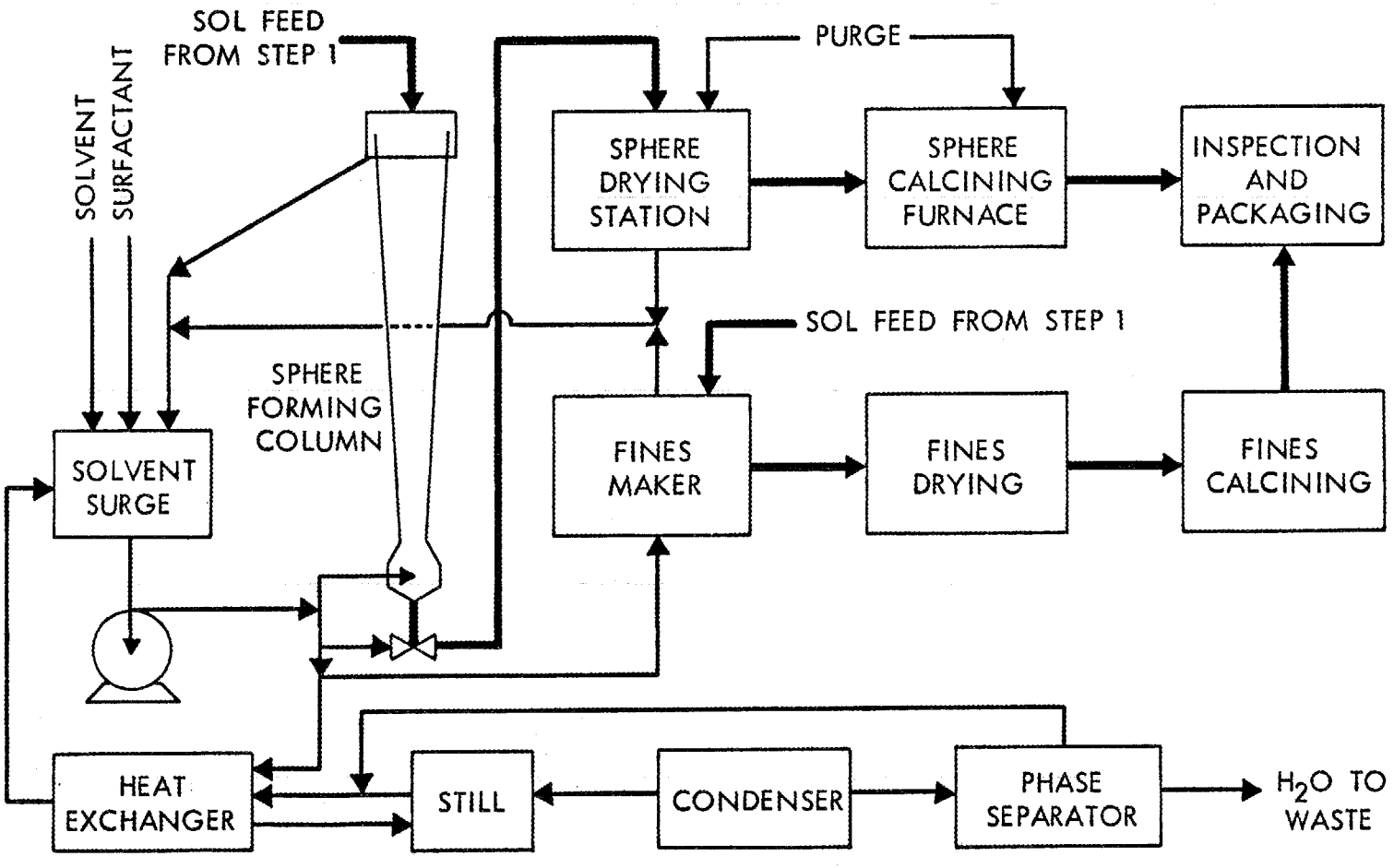

Fig. 5. Flowsheet for Production of UO_2 Microspheres (Step 4).

ORNL DWG 67-5286

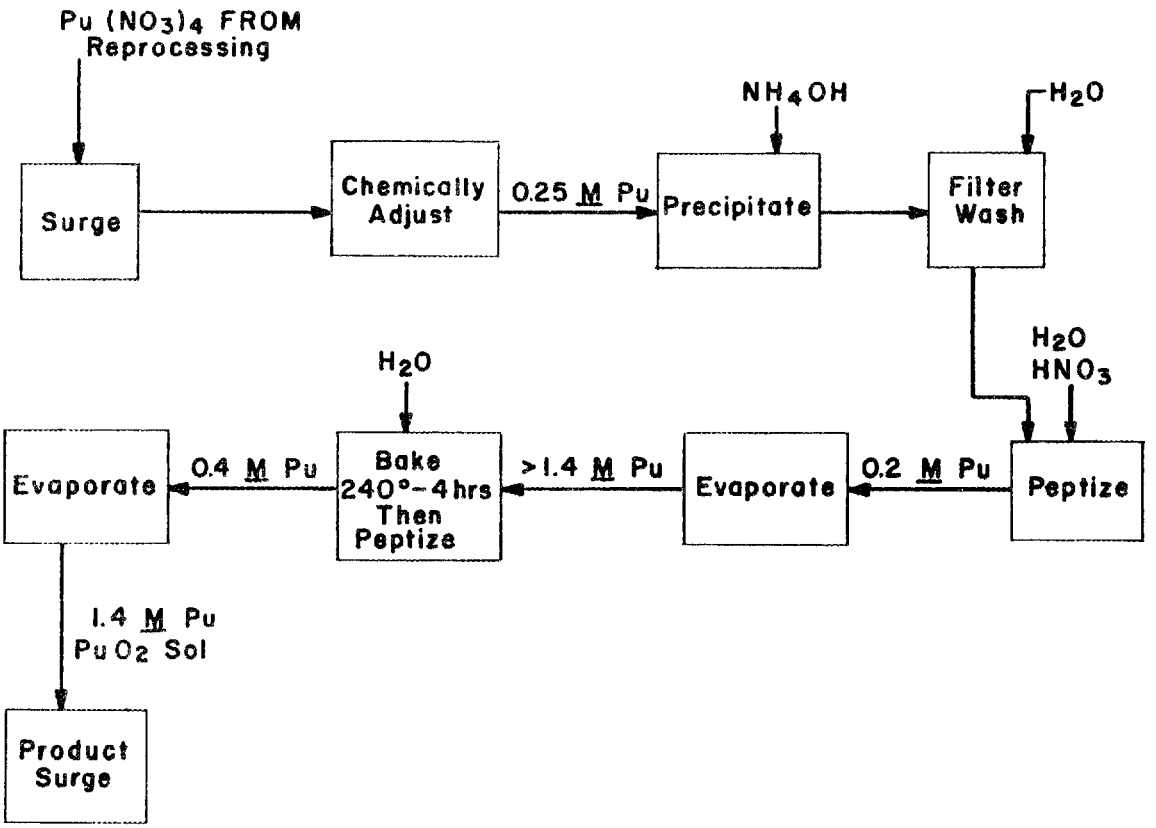

Fig. 6. Flowsheet for Preparation of PuO_2 Sol (Step 7).

ORNL DWG 67-5287

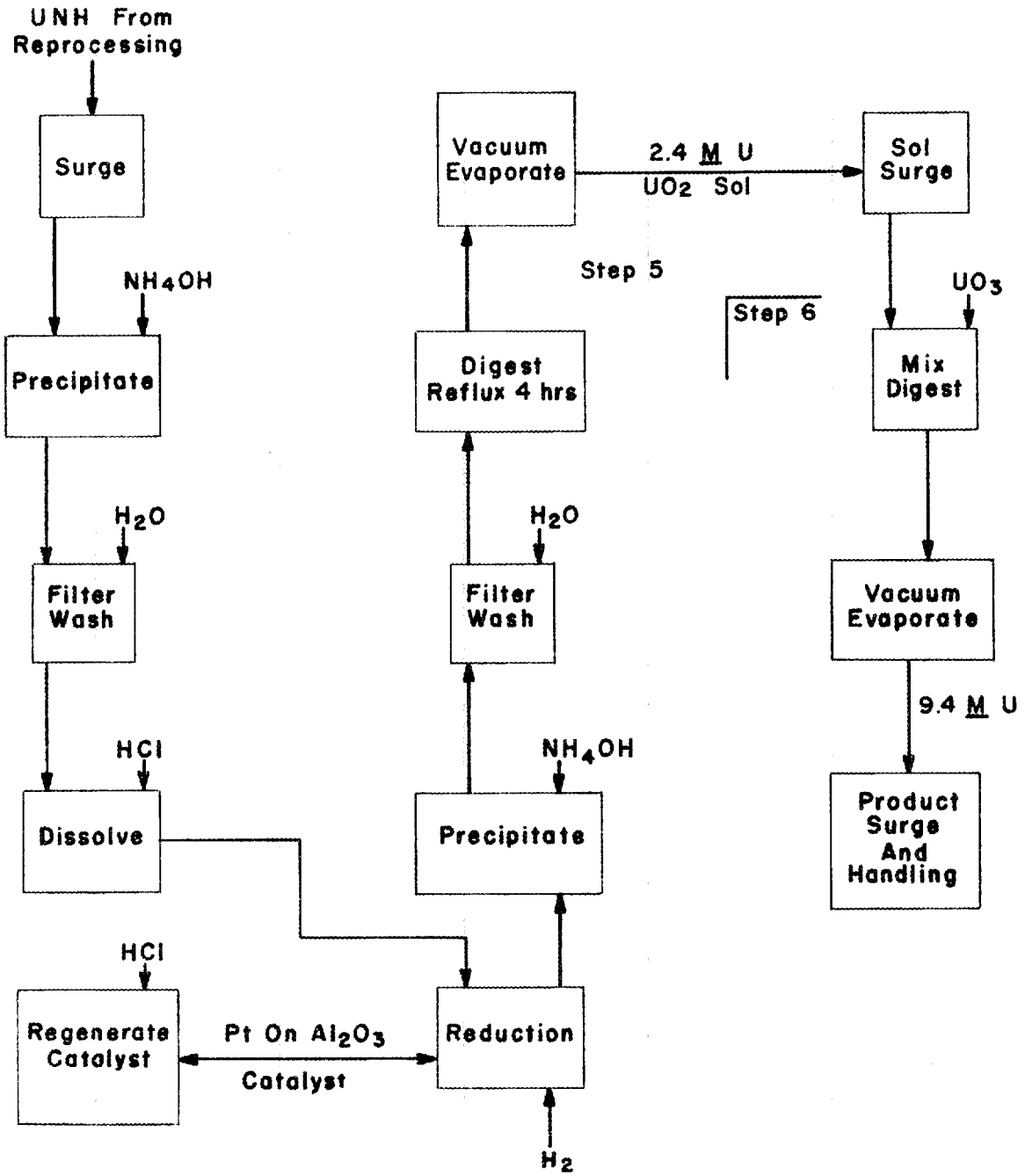

Fig. 7. Flowsheet for UO_2 Sol by the Chloride Route (Step 5) and Conversion of UO_2 Sol to "Clay" (Step 6).

ORNL-DWG 66-12347 R

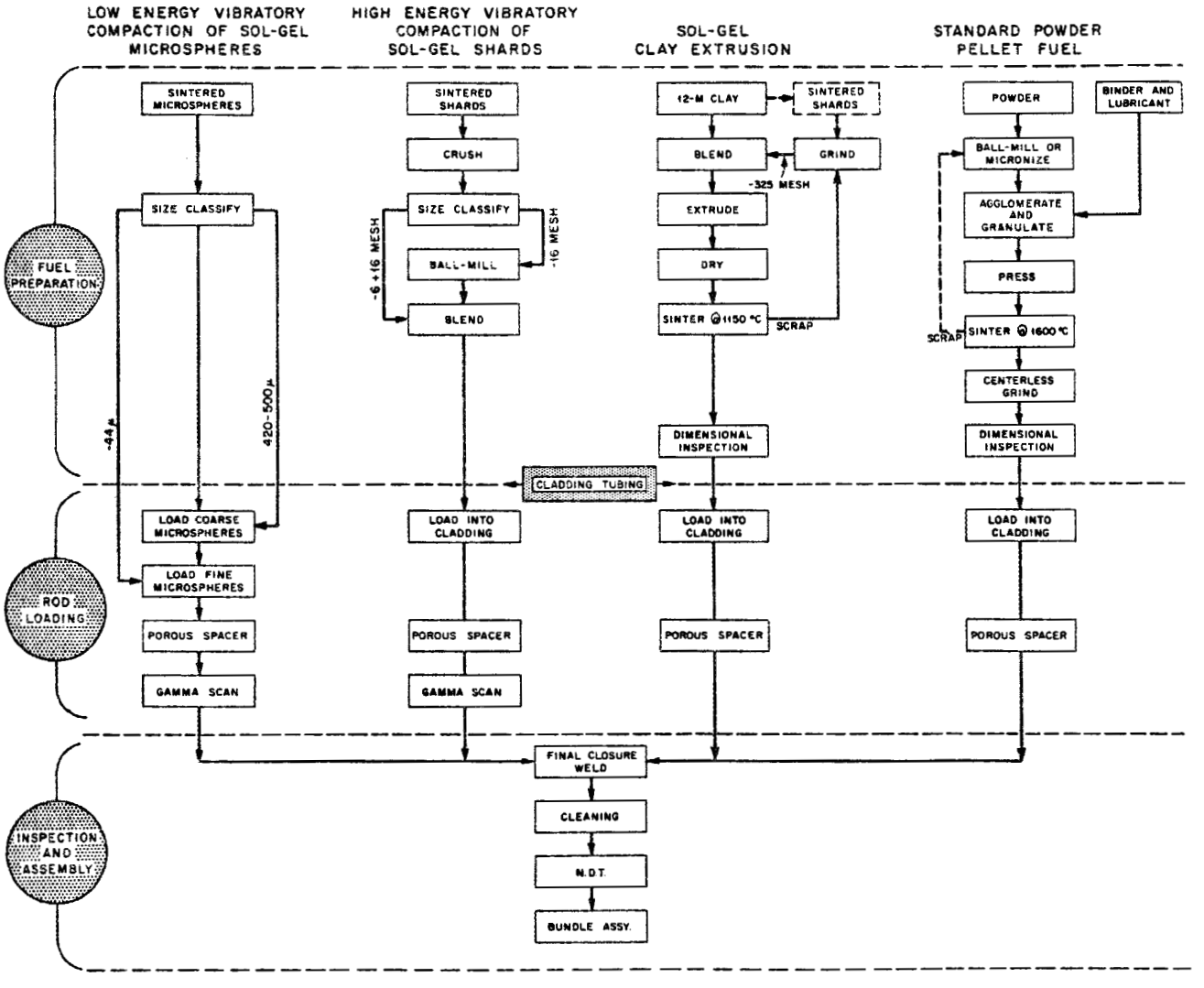

Fig. 8. Comparative Flowsheets for Alternate Fuel Rod Fabrication Techniques.

axial blanket fuel (depleted UO_2). The loaded fuel rod is gamma scanned to determine both the average fuel density and variations in fuel mass per unit length.

For the Vi-Pac process sintered shards are crushed, and the coarse fraction (1 to 3 mm) is separated. Material smaller than 1 mm is ball-milled to further reduce its average particle size and to provide a relatively consistent particle size distribution. The two size fractions are weighed to a predetermined ratio, blended to a homogeneous mixture, loaded, and compacted by high-energy vibration. Subsequent process steps are the same as for Sphere-Pac.

In the pelletizing process we assume the same process steps as would be required for coprecipitated ceramic-grade powder. The powder is ball-milled, mixed with binder and lubricant, agglomerated, and granulated to achieve suitable flow characteristics for feeding into the automatic pellet press. We assume that pellets will need a higher sintering temperature than extrusions to remove the binder and lubricant and that the fired pellets will require grinding to final dimensions.

In the sol-gel extrusion process, the clay is blended with process scrap to provide maximum control of shrinkage during sintering.[5] At first, sintered shards are used in lieu of process scrap. If the process should produce very little scrap, it might be necessary to recycle some of the sintered material into the clay. The mixture is extruded, dried, and sintered at conventional sol-gel sintering temperatures of less than 1200°C. Our early results indicate that it may not be necessary to centerless grind the sintered extrusions if a diametral tolerance of ±0.001 in. is acceptable; however, until we can establish that grinding is definitely not required, we include a grinding step in our economic studies. The extrusions may be loaded into cladding by the same technique used with pellets.

ESTIMATION METHOD

The estimates for the fuel preparation and for the fabrication methods were done in separate studies; because the methods used are somewhat different, each will be discussed separately.

Fuel Preparation

In this portion of the study we have attempted to present realistic conservative estimates of costs for preparing urania and plutonia-urania binary mixtures as spheres, shards, powders, and sol-gel clays. These estimates, combined with the fabrication estimates, reveal the comparative economic potential of the four alternate fuels.

Each step outlined in Fig. 2 is estimated as a unit. The cost for any combination of products is the sum of the costs for the individual steps to the desired products at the required capacity for the steps. For example, the cost of producing 2000 kg/day of UO_2 shards and 400 kg/day of PuO_2–75% UO_2 microspheres is the sum of the costs for 2300 kg/day for step 1, 2000 kg/day for step 2, 100 kg/day for step 7, and 400 kg/day for step 11.

In these estimates the fuel materials facility is an integral part of the fabrication plant, which is located on the same site as the plant for the recovery of plutonium and uranium from irradiated fuel. Although there would undoubtedly be common use of utility and site facilities, no attempt is made to evaluate the resulting savings. A cost for these factors is included in the capital cost estimate.

Plant throughputs estimated are: 300, 1000, and 10,000 kg of uranium per day for steps 1 through 6; and 30, 100, and 300 kg of plutonium per day for steps 7 through 11. The actual plant throughput is sufficient material to guarantee the delivery of the stated quantity to the reactor. In steps 8 through 11 the total uranium and plutonium throughput is estimated for 10, 17.5, and 25% PuO_2 in the mixed oxide. Costs for parameter values not calculated are graphically interpolated. Fuel cycle makeup requirement and possible sale of plutonium are not considered.

The steps in the capital cost estimates follow:

1. Size the equipment to perform the necessary operations.
2. Determine the size building to house the above equipment.
3. Estimate the installed equipment cost.
4. Estimate the building cost with normal services.
5. Estimate the cost of site improvements at 15% of items 3 and 4.
6. Estimate the cost of construction overhead at 30% of the sum of items 3, 4, and 5.
7. Estimate the cost of architect-engineering fee at 15% of the sum of items 3 through 6.
8. Apply a 30% contingency factor to the sum of items 3 through 7.

Operating cost estimates are the sum of the estimated chemical costs, operating and maintenance labor, utilities, materials, and overhead. Labor was priced at $7500/man-year; overhead is allowed at 100% of all labor.

The above procedure has been followed on a series of feed material estimates.[6–8] Where applicable, data from earlier estimates[6] were adapted for this study.

Fabrication

Most of our previous economic evaluations of the sol-gel process have treated the preparation and fabrication of thorium and thorium-uranium oxides. Typical of earlier evaluations are the Spectral Shift Control Reactor (SSCR) design with fuel elements of high-density bulk oxide loaded by vibratory compaction (Vi-Pac) into Zircaloy-2 cladding,[8–10] the Heavy-Water Organic-Cooled Reactor (HWOCR) design with the same fuel but in Sintered Aluminum Product (SAP) cladding,[7] and the High-Temperature Gas-Cooled Reactor (HTGCR) designs with carbon-coated thoria, urania, and thoria-urania microspheres.[8–11]

Since we often have to estimate fuel fabrication costs for a variety of designs, production rates, methods of fabrication, and economic assumptions, we developed a method of cost estimating that is especially adapted to comparative economic evaluation. A computer program, FABCOST, is used to perform the large number of calculations involved in evaluating

fabrication costs for different fuel types and process schemes. In addition to providing the obvious advantage of saving time, the computer program permits the storage of cost information about equipment, materials, buildings, and manpower. This information can be readily recalled and applied to each estimate in a consistent and unbiased manner. Since the method is especially useful in comparing the relative fuel fabrication costs of different fuel designs or alternate fabrication processes, we have used it to conduct this study of fabrication costs.

Uncertainties are present in these estimates and comparisons because of incomplete technological development, the lack of fabricating experience at the production rates postulated, the lack of details on some fuel element designs, and the question of appropriate basic economic assumptions. Most of our studies relate to advanced fuels, which are not yet being produced on any significant scale, but we have gained substantial confidence in our methods by using our computer code to estimate costs of fuel elements for which production costs have been established. Even more accurate than our absolute cost estimates are our comparative evaluations; that is, comparison of the costs of different designs, different processes, or fabrication under different basic economic assumptions.

The validity of our fuel fabrication cost estimates is a question often asked and one that we ourselves do not disregard. The relative costs or the differences between concepts being compared are of prime importance, and FABCOST was specifically designed to determine these differences. But since the absolute value of the estimated cost is also of significance, we recently analyzed the General Electric—Tennessee Valley Authority (GE-TVA) Brown's Ferry Boiling Water Reactor design.[12] Our computed costs for six cases (i.e., three production rates at two rates of annual capital charge each), as shown in Table 1, were compared with the October 1966 G-E catalog prices[13] for their "Fuel Fabrication Service" (see Table 2). We believe that their costs represent plants designed for operation at capacities in the range of 500 to 1000 kg/day. The proper fixed charge to assume is uncertain, but the range of 22 to 30% is realistic. Fabrication cost is plotted against production rate in Fig. 9 for fixed charges within this range. The rates 22 and 30%

Table 1. Calculated Fuel Fabrication Costs

	Cost at Production Rate (kg/day) in $/kg		
	500	750	1000
22% Fixed Charge Rate			
1. Conversion UF_6 to UO_2	(9.60)[a]	(7.70)[a]	(6.59)[a]
2. Fabrication	77.20	67.05	60.93
3. Shipping Fuel Element	2.50	2.50	2.50
4. Losses, 1.5%	3.12	3.12	3.12
5. Inventory at $4\frac{3}{4}$% and 16 months	13.17	13.17	13.17
6. Scrap Recovery	2.56	2.56	2.56
TOTAL	98.55	88.40	82.28
30% Fixed Charge Rate			
1. Conversion UF_6 to UO_2	(9.60)[a]	(7.70)[a]	(6.59)[a]
2. Fabrication	82.32	71.29	64.69
3. Shipping Fuel Element	2.50	2.50	2.50
4. Losses, 1.5%	3.12	3.12	3.12
5. Inventory at $4\frac{3}{4}$% and 16 months	13.17	13.17	13.17
6. Scrap Recovery	2.56	2.56	2.56
TOTAL	103.67	92.64	86.04

[a]Included in fabrication cost (item 2).

Table 2. General Electric Price List (October 1966)

Core	Fabrication Price, $/kg[a]	
	1971	1972
1st	99.36	97.35
2nd	95.33	93.99
3rd	89.29	88.62

[a]For two dates of initial core delivery.

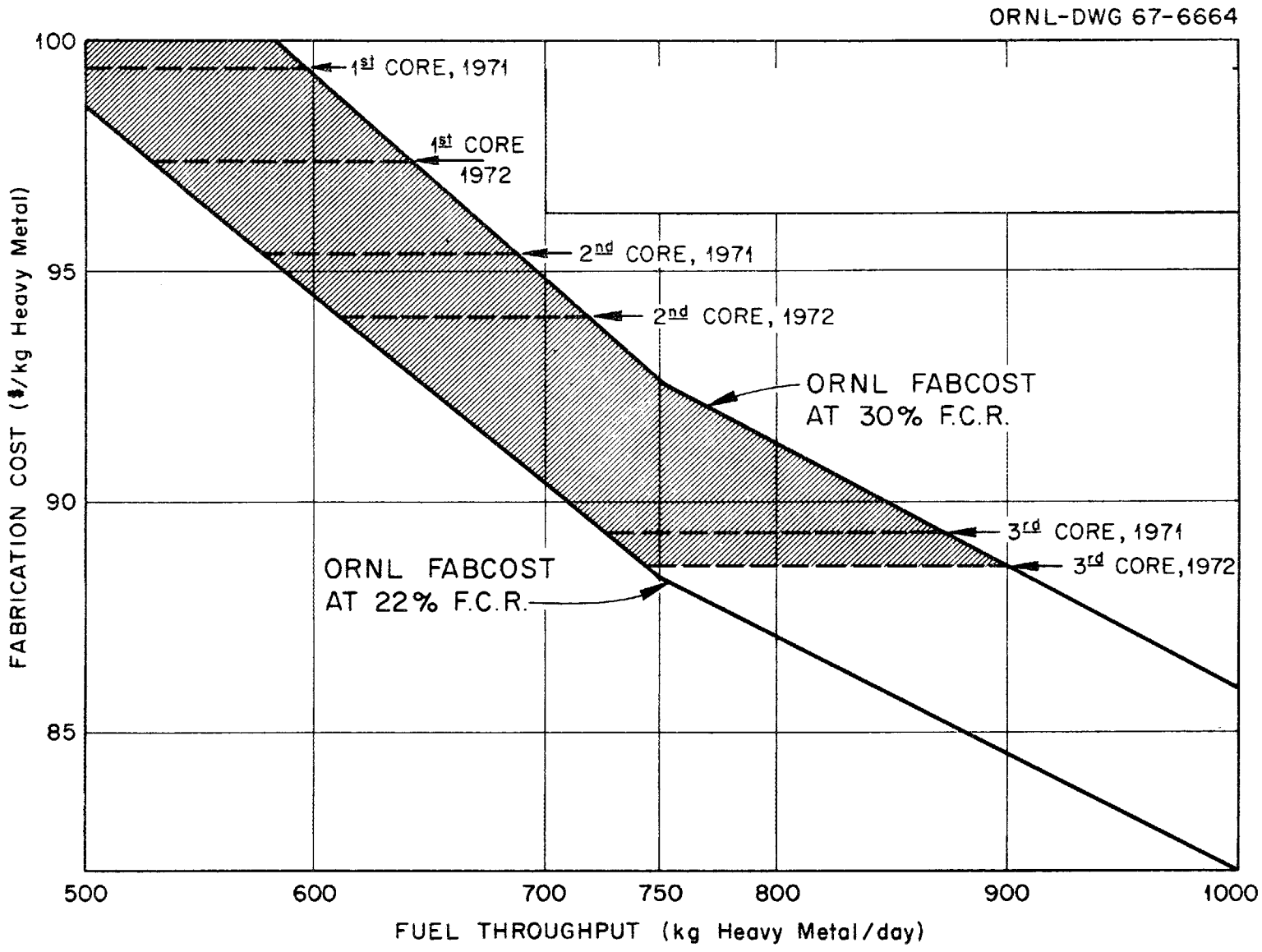

Fig. 9. Comparison of ORNL Calculated Fuel Fabrication Costs and General Electric Catalog Prices.

establish the boundaries of the ORNL fabrication cost estimate and the corresponding curves depict our projection of declining cost as production throughput is increased. The G-E catalog prices for first, second, and third cores are plotted as horizontal dashed lines. These prices are based upon the customer's order of 1, 2, or 3 cores at one time with delivery of the first core in the early 1970's. The fact that prices decrease as a function of core number and year indicates the confidence of industry that fabrication costs will decrease as a result of greater volume production. We believe this is a significant verification of the calculation methods and assumptions of the fuel fabrication cost estimates, and that these estimates reflect not only realistic differences in cost but also give reasonable approximations of the absolute values of interest in today's nuclear economy.

Computer Code Description

The code calculates costs for both rod-bundle and nested-tube fuel elements with oxide, carbide, metal, or cermet fuels fabricated by vibratory compaction, pelletizing, ceramic extrusion, slug casting, swaging, extrusion, and coextrusion processes. Table 3 gives the total capability of the code. We have used the code in the advanced converter study,[8] the ^{233}U value study,[14] the HWOCR study,[7] and studies of various reactors with possible desalination applications.

The first step in the development of data for the code was the selection of appropriate detailed flowsheets for the fabrication processes. Figure 10 is a typical, though simplified, flowsheet for fabrication of pelletized fuel in fuel elements of the bundle type for light-water reactors. Each of these process blocks was actually subdivided into its basic elemental steps in our cost estimating procedure.

The next step was to consider the modes of fabrication required. Operations performed on the incoming hardware items referred to in Fig. 10 are always performed with contact-type fabrication. Depending upon the isotopic content of the fuel material, however, those steps directly associated with the fuel fabrication might be performed with varying degrees of separation of the fuel from the worker. For example, the HWOCR thorium fuel cycle begins with ^{235}U and thorium, but the reactor

Table 3. Fuel Element Types for Which Fabrication Costs are Computed by FABCOST 5

Type of Fuel Element	Fuel Material	Fabrication Process	Type of Core-to-Cladding Bonding
Rod bundle	Oxide shards	Vibratory compaction	Gas or sodium
Rod bundle	Oxide microspheres	Vibratory compaction (low energy)	Gas or sodium
Rod bundle	Oxide	Pelletization	Gas or sodium
Rod bundle	Oxide	Ceramic extrusion	Gas or sodium
Rod bundle	Carbide	Slugs	Gas or sodium
Rod bundle	Cermet	Hot swaging	Metallurgical
Rod bundle	Metal	Extrusion	Diffusion (Ni)
Rod bundle	Metal	Coextrusion	Metallurgical
Nested tubes	Oxide	Vibratory compaction	Gas or sodium
Nested tubes	Oxide	Pelletization	Gas or sodium
Nested tubes	Carbide	Slugs	Gas or sodium
Nested tubes	Metal	Extrusion	Diffusion (Ni)
Nested tubes	Metal	Coextrusion	Metallurgical

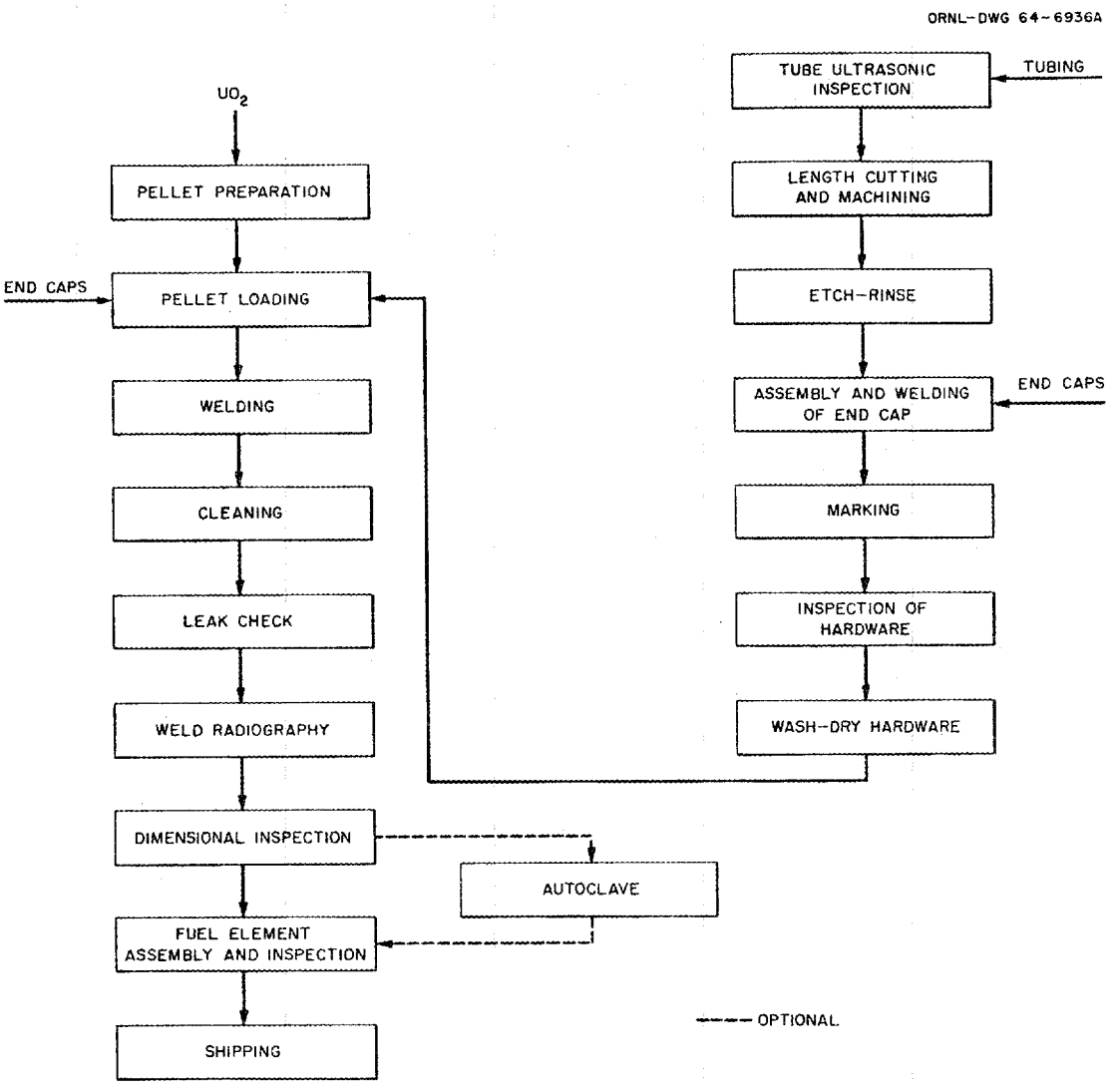

Fig. 10. Fabrication Flowsheet for Rod Bundles Containing Pelletized Fuel.

is later fueled with ^{233}U and thorium.[15] Metallurgical and ceramic processing of ^{235}U with virgin thorium must be done in a closed environment to control alpha activity; however, with such fuel there is no problem with beta or gamma activity. Processing ^{233}U-thorium, on the other hand, must provide for control of beta and gamma radiation from products of the ^{232}U decay chain. Plutonium recycle must be considered for utilization in light-water converter reactors and in fast breeders in the same manner. The degree of shielding required for refabrication is highly dependent upon the burnup levels achieved prior to recycle and upon the decontamination factor obtained in reprocessing.

The computer code was developed to estimate costs associated with five modes of fabrication:

1. Contact – in which physical handling of the fuel is permissible, such as with natural uranium metal.
2. Hooded – in which air flow is directed in a manner to prevent human ingestion of the fuel, as with natural ThO_2 powder.
3. Glove Box – in which the fuel is hermetically sealed from the worker either as a health precaution or for maintaining the fuel in a specific atmosphere other than air.
4. Semiremote – in which radiation is sufficient to require shielding of the fuel up to an equivalent of $3\frac{1}{2}$-in. thickness of steel.
5. Remote – in which high radiation levels require shielding greater than $3\frac{1}{2}$ in. of steel. Usually this shielding would be concrete and the facility would, in principle, be similar to the EBR-II Fuel Recycle Facility[16] and the Thorium-Uranium Recycle Facility[17] at ORNL.

After the fabrication flowsheets and the modes of fabrication were established, the capital, operating, and hardware costs were estimated.

Figure 11 illustrates the general form of the curves that we developed for basic equipment cost plotted as a function of the number of units to be processed per day. One must determine for each step of the process what fabrication unit controls the cost of equipment for that process step. For instance, the amount of chemical compound to be processed through an oxide sizing operation determines the equipment size and number of pieces required. For a welding operation the number of fuel rods being

ORNL-DWG 66-11104

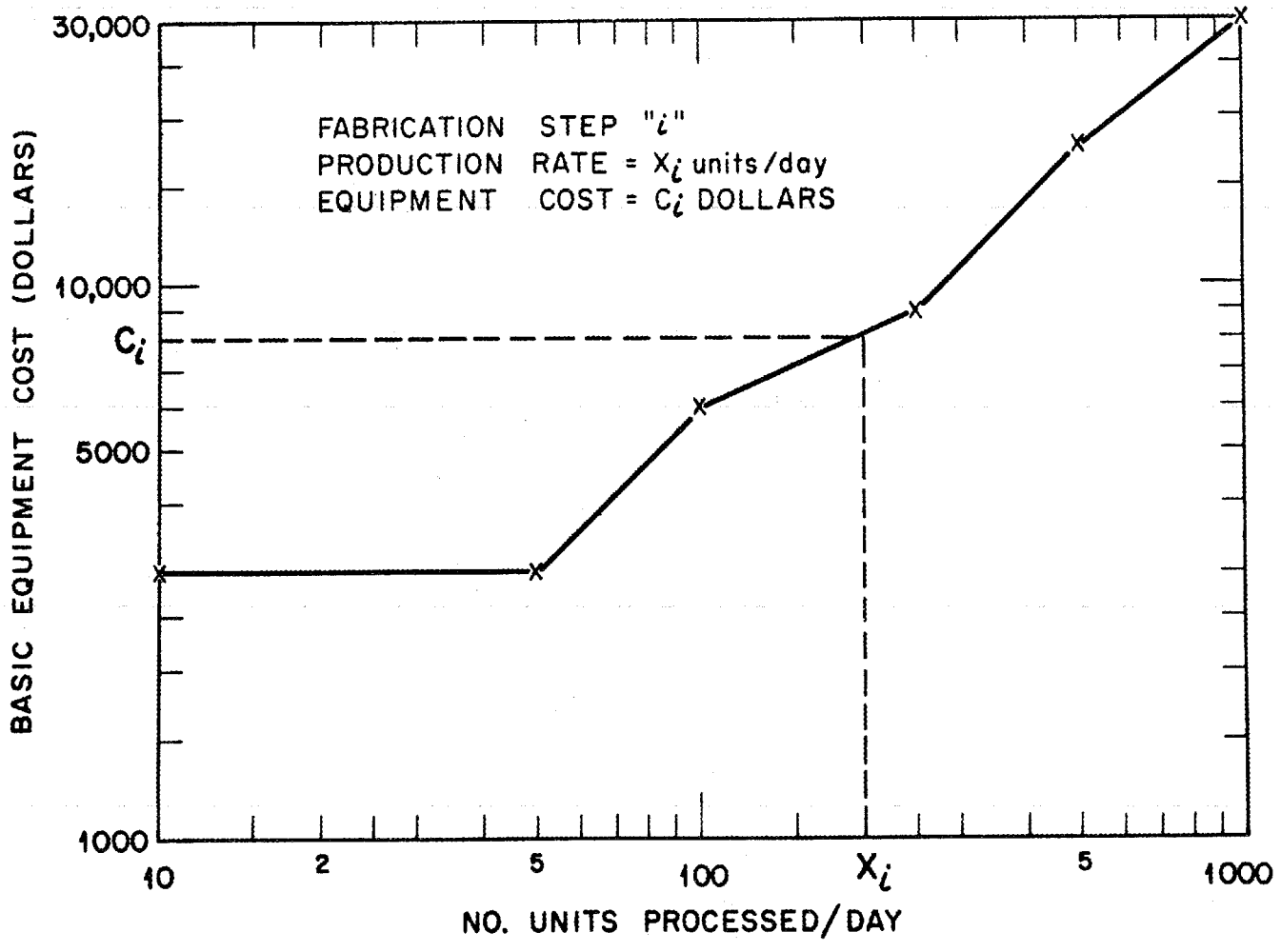

Fig. 11. General Form of Curves for Basic Equipment Cost.

processed is the determining parameter. The number of fuel elements is the controlling factor in the assembly and inspection steps. We established the nominal capacity rating and the cost of each piece of equipment for several throughput rates. An interpolation equation was fitted to these data and stored in the computer program. When we are estimating a fuel element design, the number of units to be processed in step "i" will be calculated. Then for this production rate X_i, the basic equipment cost c_i can be determined directly (see Fig. 11). Note that the cost c_i is not necessarily a value of any specific piece of equipment for which we have obtained prices. However, since each unit of equipment has some flexibility in its true production capability and since we performed this same method of cost calculation for a large number of items, the total equipment cost for the entire process should be representative.

In addition to the basic equipment cost, allowances were made for the installation and instrumentation of the equipment, the engineering design of the equipment, and the process layout. Costs were also estimated for the plant design and construction, the laboratory and office equipment, and starting up the plant. All capital costs for a fuel fabrication plant were included except the cost of development of the plant site beyond the building structure. All of these costs are capitalized and charged against the plant output at any desired annual capital charge rate. The capital cost estimates are based on a number of earlier estimates, both published[6,18] and unpublished, that have been made at ORNL.

Similarly, we developed curves to represent the manpower requirements for operating a fabrication plant. We estimated requirements for each step of the process at several rates of production and plotted these like we did the equipment costs in Fig. 11. These manpower requirements are expressed in processing time units of operator man-hours per day at 100% efficiency. Factors are applied to correct these for shop efficiency, vacations, sick leave, and personal absences. From these adjusted times we calculate the number of operators necessary to perform the process steps. We studied organization to find factors to determine

the number of supervisors, engineers, managers, and staff, clerical, maintenance, and other personnel required to staff the plant completely.

Operating costs are calculated similarly to the capital costs. The sources of data for these costs are the same reports[6,18] and unpublished data. Data and information that are being derived for the Thorium-Uranium Recycle Facility[17] are used together with the results of an ORNL Kilorod Facility time and motion study.[19]

Hardware costs have been obtained for tubing, end caps, springs, retainers, and fuel element structural components. These costs are stored in the computer program and can be retrieved as a function of quantity purchase as well as of quality requirements. Tubing costs, including the effect of wall thickness and diameter, were obtained from manufacturers for orders of various quantities. This information, coupled with information contained in the Guide to Nuclear Power Cost Evaluation,[20] was used to develop equations for tubing cost in terms of length required per day, diameter, and wall thickness. Similar equations were developed for the cost of end caps and springs as well as hardware for the complete fuel element; that is, the rod cage, end fittings, and spacers. A cost coefficient is used to adjust the base price of any hardware item that would appear to differ significantly in quality from the base case.

Code Operation

The data requirements for the computer calculations are shown in Table 4. Figure 12 is a simplified diagram of the calculation path for estimating the cost of rod bundle fabrication by vibratory compaction. The input information that we have just discussed is used to calculate the production rate for each step of the process. Based upon these calculations, the quantities of fuel element hardware — tubing, end caps, springs, and retainers — and their respective costs are extracted and summed. The operating man-hours and overhead are converted to dollars; the equipment costs are converted to capital investment to which the specified capital charge rate is applied. Each of these costs is then converted to a unit basis. In our case, we use dollars per kilogram of heavy metal as the comparative cost unit.

Table 4. Input Data to Computer Code for Calculation of Estimated Fuel Fabrication Costs

Fuel Element Design Description	Hardware Overage Allowances
Type fuel element	Tubing
Fuel rods per element	End caps
Cladding	Fuel rod springs
Material	Fuel rod retainers
Length	Fuel element components
Outside diameter	
Wall thickness	Hardware Cost Coefficients
Corrosion test	Tubing
Fuel	End caps
Material	Fuel rod springs
Diameter	Fuel column retainers
Length	Fuel element components
Theoretical density	
Attained density	Fabrication Plant Factors
Stoichiometric factor	Mode of fabrication
Enrichment	Number operating days per year
Basic Economic Assumptions	Plant load factor
Production rate	Process turnaround penalty
Capital charge rate	Shield type and thickness
	Average process reject rate

ORNL-DWG-66-6085

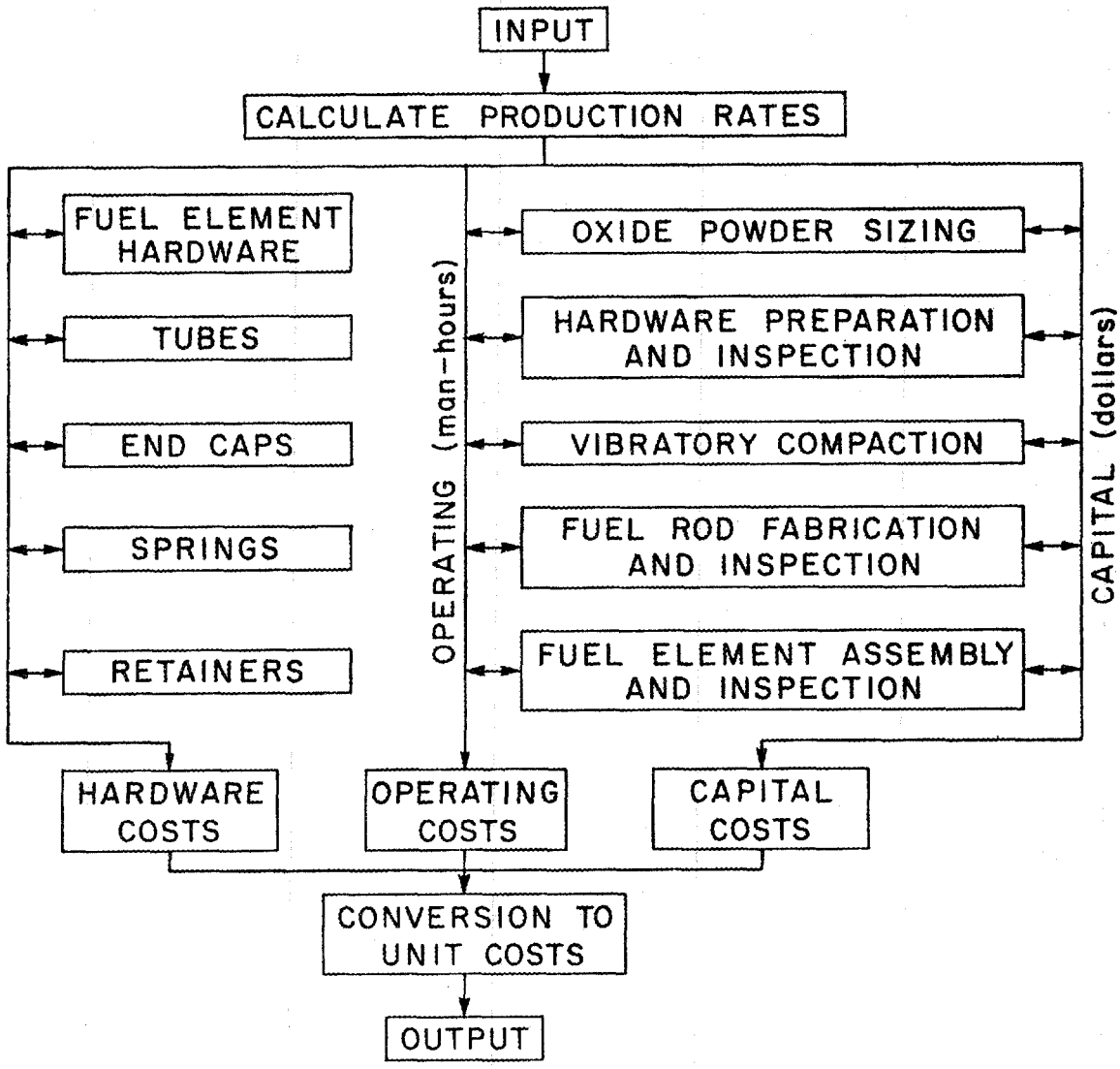

Fig. 12. Diagram of Computer Code Path for Estimation of Cost of Rod Bundle Fabrication by Vibratory Compaction.

Basic Economic Assumptions

We have selected certain basic economic assumptions to apply to the particular fabrication cost study in this paper. We assume that the fabrication plant is centrally located at the same site as the fuel reprocessing plant but has a completely independent management, operation, and maintenance. There is common use of utility facilities such as electrical power substations, water supplies, steam heating systems, natural gas lines, access roads, and waste treatment and disposal facilities.

We assume that the plant is to be designed for fabricating a single type of fuel element. A reference value of 22% per year is specified for the fixed charge rate on depreciating capital.

Operating costs include wages, salaries, fringe benefits, maintenance, general supplies, utilities, and overhead expenses inherent in the plant operation. We also assume that the plant will operate 260 days per year, with three-shift operation for throughput rates of 1 metric ton/day or greater.

All materials other than nuclear fuel that form a part of the finished product are included as hardware costs. Use charges for fuel are not included in fuel fabrication costs but are considered in the fuel cycle cost analyses.

To compensate for fluctuations in product demand, the fabrication plant must have a capacity, both in equipment and manpower, for 125% of specified average throughput.

Fuel material according to plan is to be supplied by the fuel conversion plant at 105% of average throughput quantity and in one of the following forms:

Fabrication Process	Physical Form of Fuel Material
Low-energy vibratory compaction (Sphere-Pac)	Sol-gel microspheres
High-energy vibratory compaction (Vi-Pac)	High-density sol-gel oxide shards
Pelletization	Sol-gel unsintered powder
Sol-gel extrusion	Sol-gel clay

The excess 5% of material is to be returned to the fuel conversion plant for chemical recovery and reconstitution. This scrap recovery cost is included in fuel preparation costs.

The cost of fuel element fabrication for a given production rate is assumed to remain constant with time; that is, no escalation allowances are provided. Finally, we assumed that the plant is to be designed for equilibrium recycle fuel and that equilibrium cycle plutonium requires remote fabrication facilities with 36 in. of normal concrete shielding.

Fuel Element Description

We have used as the reference design a fuel element having fuel rods of the type shown in Fig. 13, which we believe to be representative of oxide-fueled LMFBR designs. This fuel rod is not vented; all fission gas released from the fuel is retained in the 36-in.-long plenum at the upper end. The radial blanket consists of 18 in. of depleted UO_2 both above and below the core fuel. The core fuel is $(U\text{–}18\%\ Pu)O_2$ and its 24-in. length is typical of the so-called "pancake core" designs. Cladding is type 316 stainless steel with 0.010-in.-wall thickness. These fuel rods are assembled into a square bundle of 13 × 13 rods. Additional parameters are shown in Table 5.

Industry Scale

We have calculated the costs as a function of production rate from 35 to 1000 kg/day of heavy metal and for a range of fuel diameters. However, in our presentation of results, we shall emphasize fuel preparation and fabrication plants to serve 15 fast breeder reactors, each 1000 Mw (electrical), for a total industry of 15,000 Mw (electrical).*

---

*This assumption of an industry size served by a single fabrication plant is consistent with earlier ORNL reactor evaluations.[7,8] The basis of this choice is that it represents a significant penetration of the nuclear reactor industry by a specific reactor type. If the reactor fails to make a significant penetration of the market and only one or two are built, its economics are not of general interest.

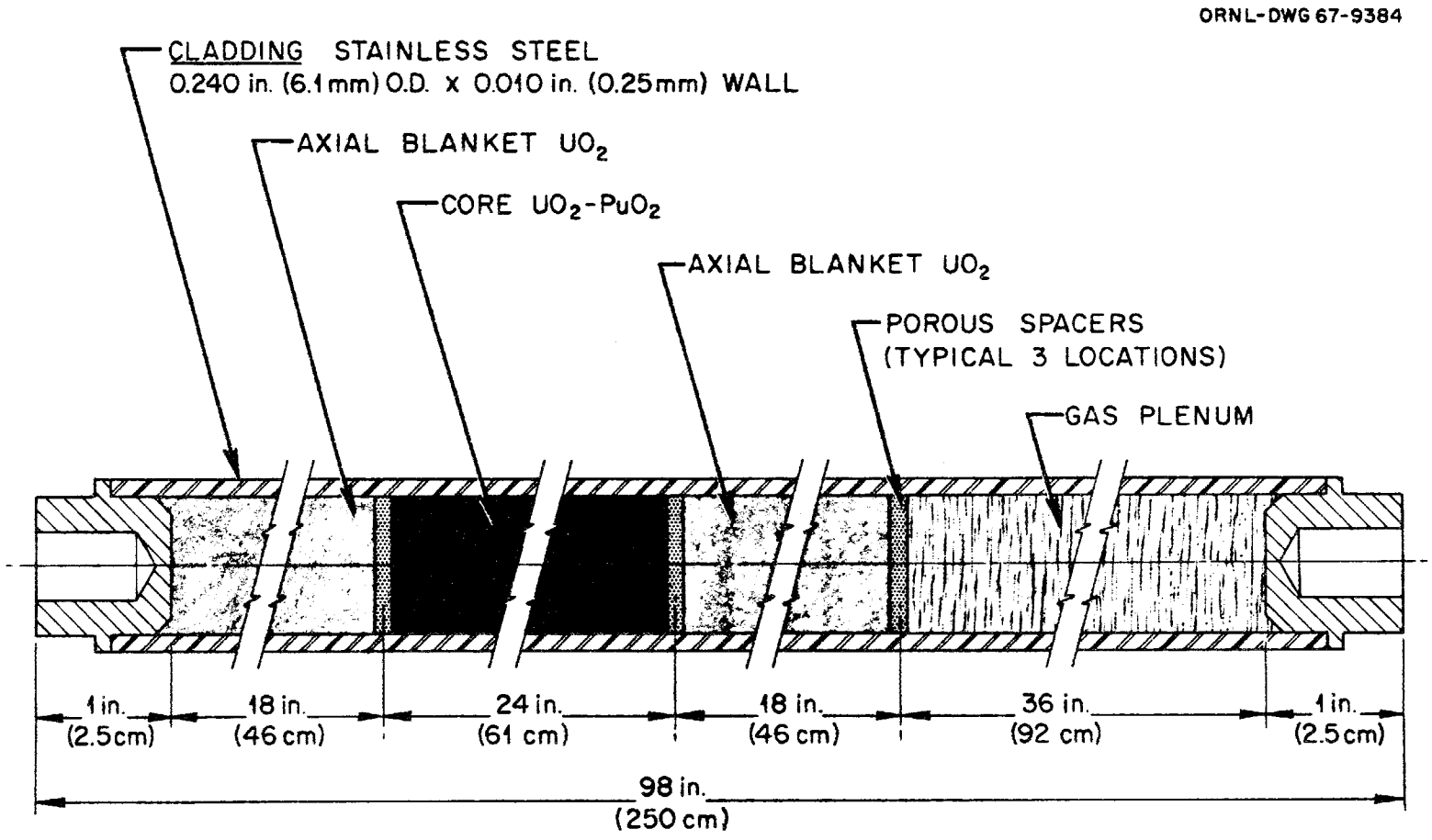

Fig. 13. Common Fuel Rod Design for Comparative Fabrication Cost Estimates.

Table 5. Fuel Element Description for Comparative Estimates of Sol-Gel Fuel Fabrication Costs

Fuel	
Composition	$(U-18\%\ Pu)O_2$
Diameter, in.	0.200, 0.220, 0.250, 0.280
Length, in.	24
Theoretical density, g/cm^3	11.06
Smear density,[a] %	0.85
Burnup, Mwd/tonne	100,000
Fuel Rod Cladding	
Material	Stainless steel
Outside diameter, in.	0.220, 0.240, 0.270, 0.300
Wall thickness, in.	0.010
Overall length, in.	96
Fuel Assembly	
Type	Rod bundle
Rods per assembly	169
Fabrication Plant	
Mode of operation	Remote
Operating days per year	260
Load factor	0.8
Capital charge rate, %	22
Reject rate, %	5

[a]This is a term used to denote a density calculated from the mass of fuel loaded and the inside diameter of the cladding.

An average core fuel exposure of 100,000 Mwd/tonne of heavy metal requires an average fuel output of 500 kg (U + Pu) each operation day. With an assumed reject rate of 5% and a plant 25% oversize to accommodate fluctuations in demand and process equipment on-stream time, the required design capacity of the facility becomes 650 kg of heavy metal per fabrication day. Table 6 shows for 0.220-in.-OD fuel the relative quantities of oxide weight, fuel length, and number of pellets, fuel rods, and fuel assemblies required as average output and for the plant design capacity.

RESULTS OF COST ESTIMATES

The costs of material preparation and fuel element fabrication are presented in separate discussions.

Fuel Preparation

The estimated costs, both capital and operating, are summarized in Tables 7 and 8. A single estimate is presented for steps 2 and 3, since the processes for producing shards and powder are identical through the low firing (500°C) step. The estimates for the tube furnace and roll crusher for the shards and the ball mill and accessories (to grind to −325 mesh) for the powder were comparable.

The estimate for step 4 is for producing large and fine microspheres. As shown on Fig. 4, separate equipment is provided for the forming, drying, and firing of the fines. We did not try to evaluate possible cost reduction from the use of a single production line for both products.

The cost estimate for plutonia sols (step 7) is based on our current procedure. Any processing with recycle plutonium requires criticality control, strict accountability, shielded remote operations, and "hot" maintenance. The critically safe processing equipment is assumed arranged in a canyon shielded by 24 in. of ordinary concrete. A separate cell is allotted to each major process step. In-cell electromechanical manipulators and shielded viewing windows are provided for nonroutine operations and maintenance. Routine operations are automatic.

The formation of the binary products, steps 8 through 11, has the same criticality, containment, and shielding requirements as step 7.

Table 6. Fuel Production Rates for a 15,000 Mw (electrical) Industry and Core Fuel Exposure of 100,000 Mwd/tonne[a]

	Production Rate per Fabrication Day	
	Average Output	Plant Capacity
U+Pu, kg	500	650
UO_2-PuO_2, kg	565	735
Linear feet of fuel	8,038	10,450
Pellets, 0.5 in. in length	192,916	250,000
Fuel rods	4,019	5,225
Fuel assemblies	24	31

[a]For 0.220-in.-OD fuel.

Table 7. Cost Estimates for Sol-Gel Preparation of UO_2

Step	Production Rate (kg/day U)	Cost, $/kg Heavy Metal		
		Operating	Capital	Total
(1)	300	3.16	3.95	7.11
(Prepare UO_2 sol)	1,000	1.62	1.88	3.50
	10,000	0.45	0.46	0.91
(2) or (3)	300	3.74	3.02	6.76
(Prepare UO_2 shards	1,000	1.89	1.44	3.33
or powder)	10,000	0.59	0.47	1.06
(4)	400	4.30	4.23	8.53
(Prepare UO_2	1,000	2.30	2.01	4.31
spheres)	10,000	0.82	0.66	1.48
(5)	300	3.64	4.51	8.15
(Prepare UO_2 sol	1,000	1.91	2.35	4.26
for extrusion)	10,000	0.51	0.52	1.03
(6)	300	1.63	1.73	3.36
(Prepare UO_2 clay)	1,000	0.82	0.83	1.65
	10,000	0.26	0.27	0.53
(1) + (2) or (3)	300			13.87
(Total for shards	1,000			6.83
or powder)	10,000			1.97
(1) + (4)	300			15.64
(Total for	1,000			7.81
microspheres)	10,000			2.39
(5) + (6)	300			11.51
(Total for sol-gel	1,000			5.91
clay)	10,000			1.56

Table 8. Cost Estimates for Sol-Gel Steps Involving PuO_2

Step	Production Rate (kg/day)		Plutonium in Heavy Metal, %	Cost, $/kg Heavy Metal		
	U	Pu		Operating	Capital	Total
(7)		30	100	24.76	30.77	55.53
(Prepare PuO_2 sol)		100	100	11.08	13.38	24.46
		300	100	6.28	6.69	12.97
(8)	270	30	10	3.51	3.74	7.25
[Prepare $(U,Pu)O_2$	900	100	10	1.64	1.66	3.30
clay]	2700	300	10	0.94	0.86	1.80
	141.4	30	17.5	5.80	6.33	12.13
	471.4	100	17.5	2.68	2.81	5.49
	1414	300	17.5	1.52	1.42	2.94
	90	30	25	7.97	8.86	16.83
	300	100	25	3.67	3.92	7.59
	900	300	25	2.09	1.98	4.07
(9) or (10)	270	30	10	4.29	4.59	8.88
[Prepare $(U,Pu)O_2$	900	100	10	2.05	2.06	4.11
shards or powder]	2700	300	10	1.18	1.10	2.28
	141.4	30	17.5	6.92	7.54	14.46
	471.4	100	17.5	3.24	3.39	6.63
	1414	300	17.5	1.83	1.74	3.57
	90	30	25	9.33	10.35	19.68
	300	100	25	4.37	4.65	9.02
	900	300	25	2.48	2.36	4.84
(11)	270	30	10	5.02	5.19	10.21
[Prepare $(U,Pu)O_2$	900	100	10	2.43	2.35	4.78
microspheres]	2700	300	10	1.40	1.47	2.87
	141.4	30	17.5	7.96	8.40	16.36
	471.4	100	17.5	3.76	3.81	7.57
	1414	300	17.5	2.12	1.97	4.09
	90	30	25	10.59	11.41	22.00
	300	100	25	5.02	5.17	10.19
	900	300	25	2.84	2.63	5.47

With the time limitation of this study, the allowances for these factors may not be optimum. The need for a detailed design study of the effect of the factors, particularly criticality, on costs still exists. Cost calculations for possible plants are outlined in Table 9.

The total costs for the various products as a function of production rate are given in Figs. 14 through 17. The order of costs of preparing the four desired products from lowest to highest cost are: (1) sol-gel clays, (2) shards or powder, and (3) microspheres.

The magnitude of costs may be lower than estimated. The use of the 30% contingency factor is higher than normal. A conservative approach was used on scaling up all steps not completely developed. Three areas of possible reduction in comparative costs are (1) the use of nitrate sol production for clays, (2) a reduction in the number of lines for large microspheres, and (3) the elimination of independent lines for large and fine microspheres. The remote maintenance feature for steps 6 through 11 may also offer considerable area for cost improvement, but this would affect all products.

Fabrication

The fabrication costs of the four reference fuel diameters for the four processes are presented in Fig. 18 as a function of production rate ranging from 34 to 1000 kg of heavy metal per day. Included in these costs are the operating, capital, and hardware costs. The costs decrease with increasing production rate, as is usually the case with mass production. The cost of the four processes are given in Figs. 19 through 22 as a function of fuel diameter for a range of production rates. The costs decrease as the diameter increases, since the number of units to be fabricated per kilogram of fuel decreases.

Since we have assumed the need for remote fabrication of plutonium-bearing fuels, the capital investment in the fabrication facility is an appreciable sum. Table 10 is a detailed breakdown of the capital costs for each of the four processes for a 500 kg/day production rate. The process would be fully automated to perform the high level of production required (approx 4000 fuel rods per day). The personnel requirements

Table 9. Examples of Fuel Preparation Costs

Plant Product	Step[a]	Rate (kg/day)	Cost ($/kg)	Cost ($/day)	Comment
400 kg/day (U–25% Pu)O_2 microspheres and 2700 kg/day UO_2 shards	(1)	3000	1.95	5,850	Interpolated
	(2)	2700	2.06	5,562	Interpolated
	(7)	100	24.46	2,446	
	(11)	400	10.19	4,076	
	Total	3100	5.79	17,934	Core and blanket
	Core	400	17.77	7,107	10%(1)+(7)+(11)
	Blanket	2700	4.01	10,827	90%(1)+(2)
400 kg/day (U–25% Pu)O_2 powder only	(1)	300	7.11	2,133	
	(7)	100	24.46	2,446	
	(10)	400	9.02	3,608	
	Total	400	20.47	8,187	
400 kg/day (U–25% Pu)O_2 sol-gel clay	(5)	300	8.15	2,445	
	(7)	100	24.46	2,446	
	(8)	400	7.59	3,036	
	Total	400	19.82	7,927	

[a]Numbered steps are defined in Fig. 2.

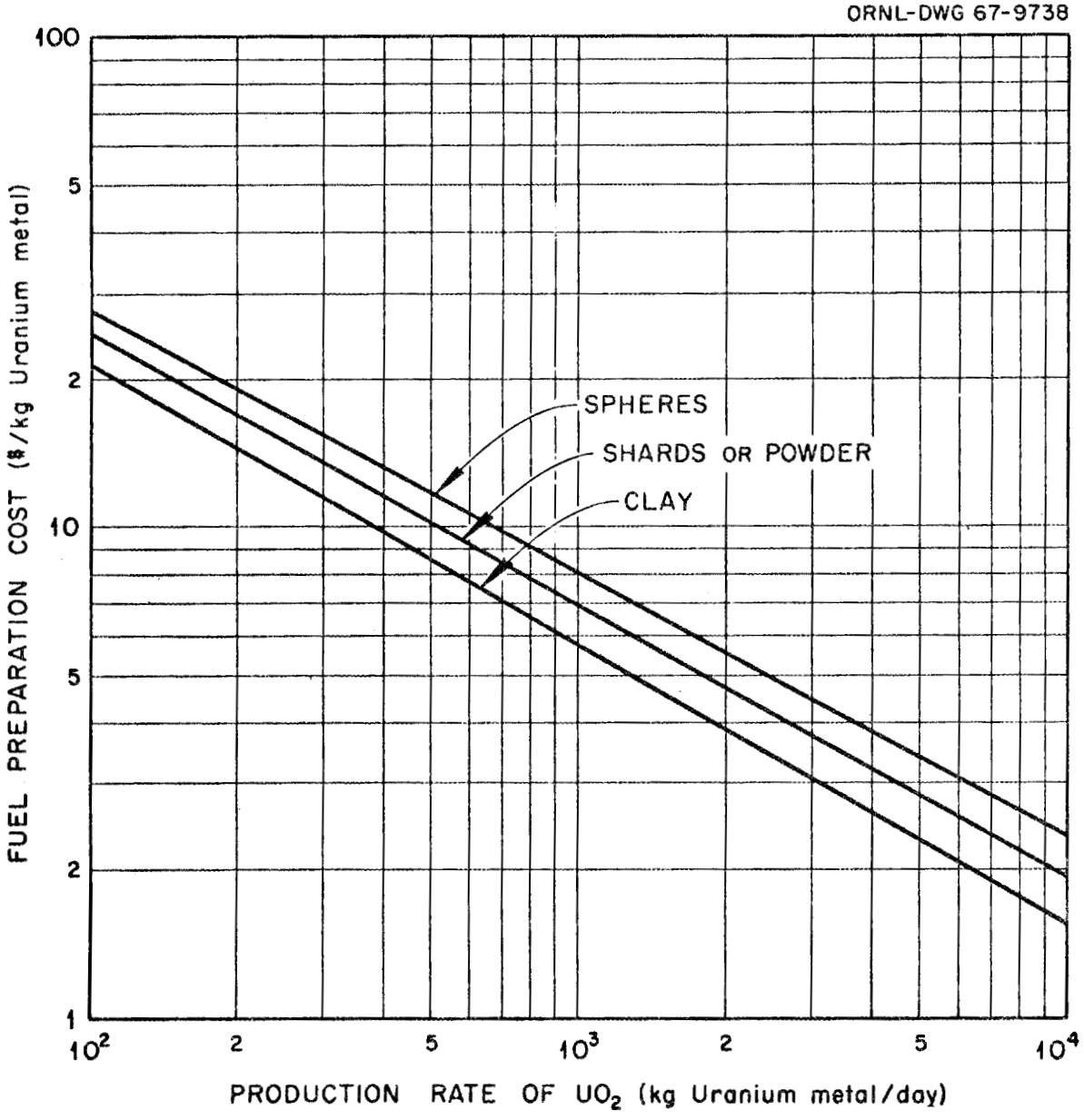

Fig. 14. Cost of Sol-Gel UO_2 Products.

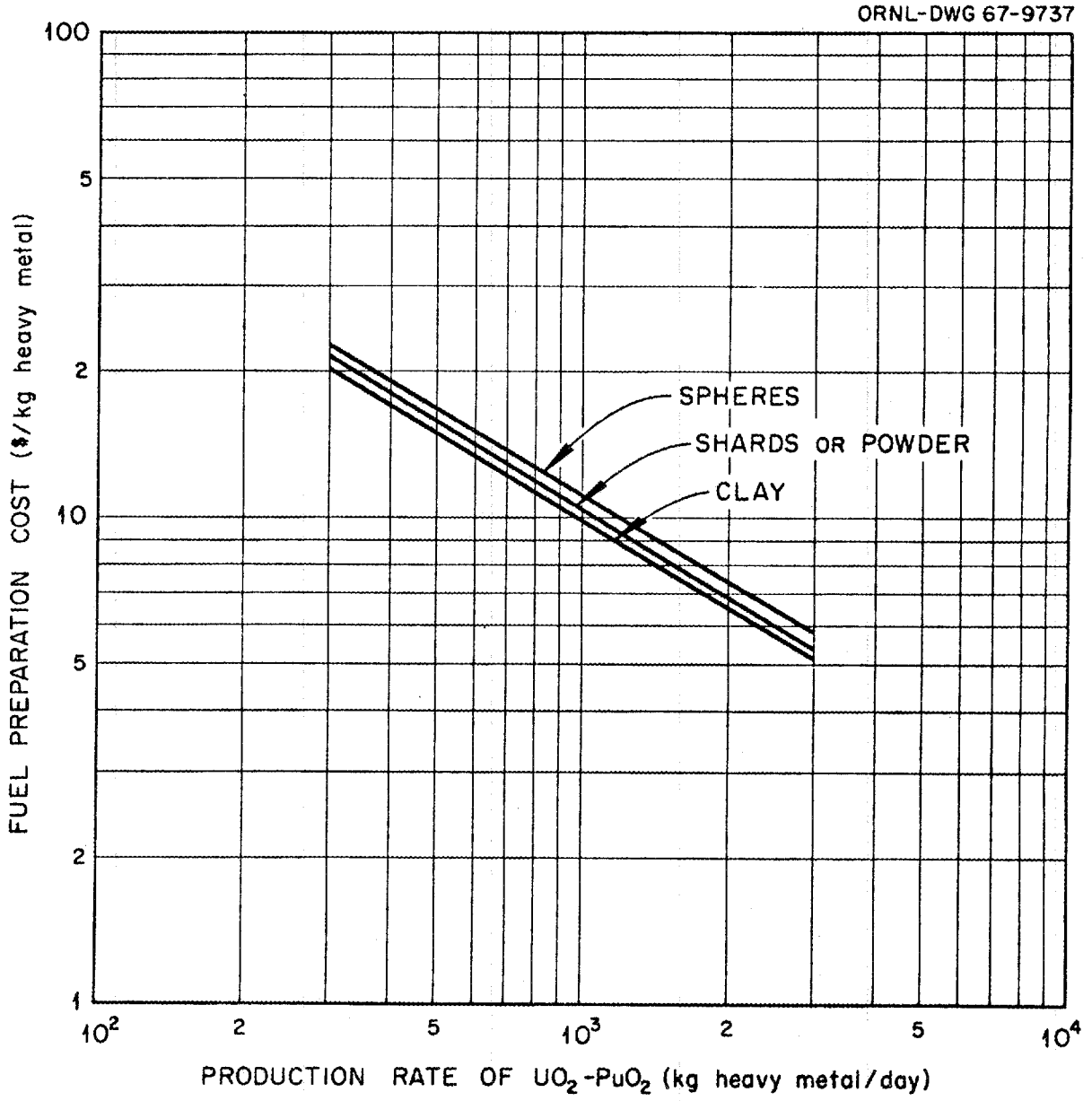

Fig. 15. Cost of Sol-Gel (U–10% Pu)O_2 Products.

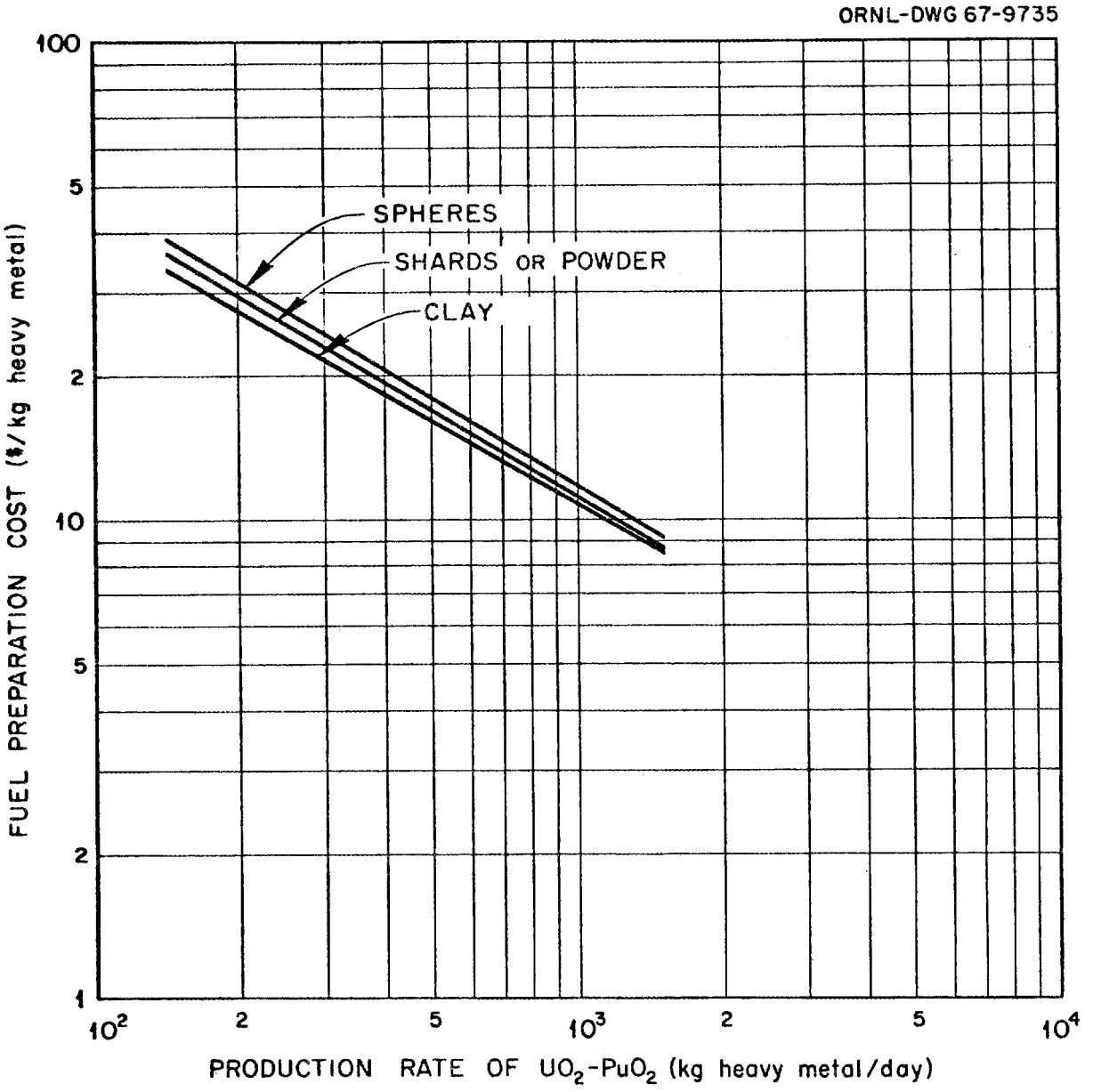

Fig. 16. Cost of Sol-Gel (U–17.5% Pu)O_2 Products.

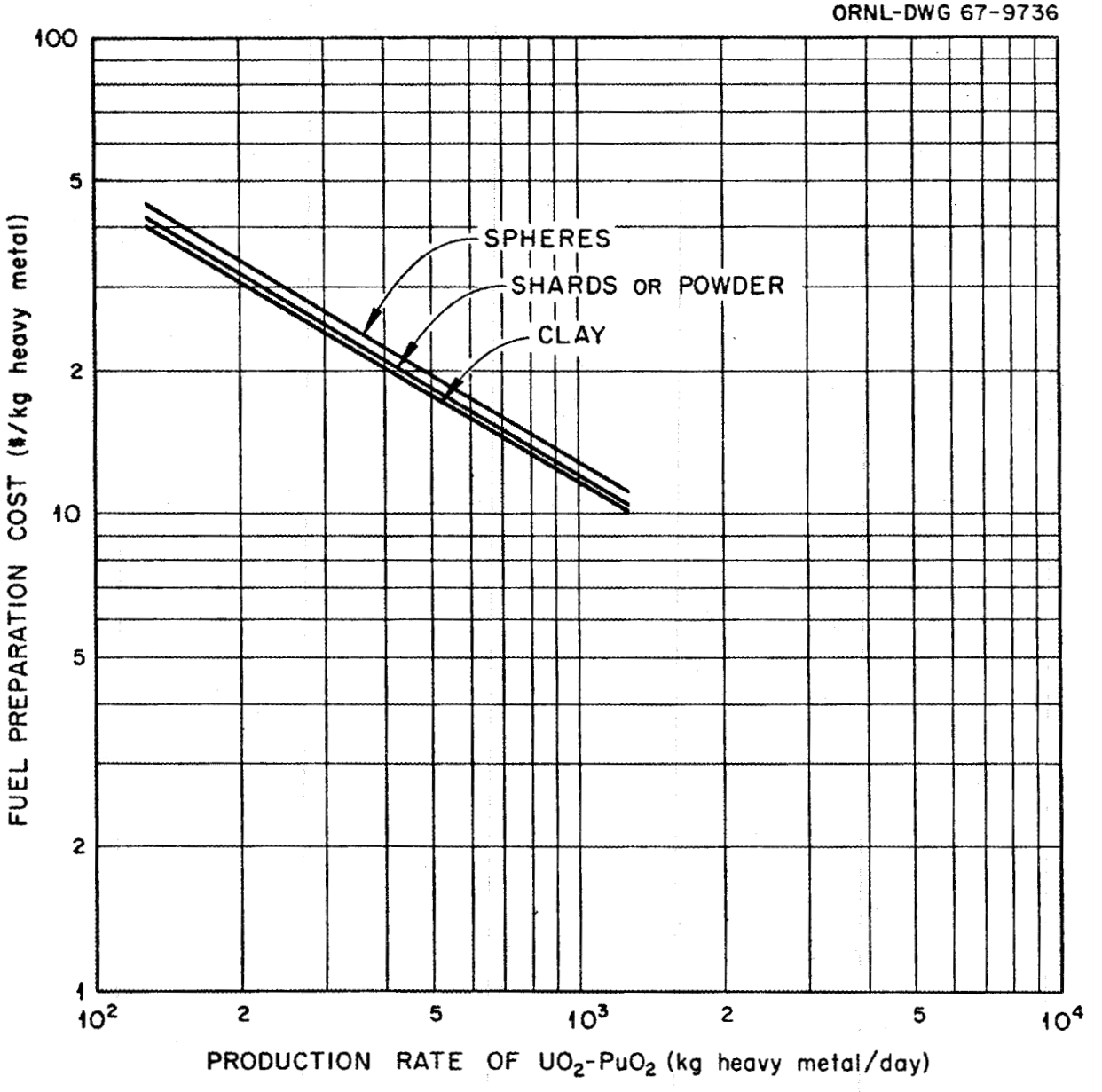

Fig. 17. Cost of Sol-Gel (U–25% Pu)O_2 Products.

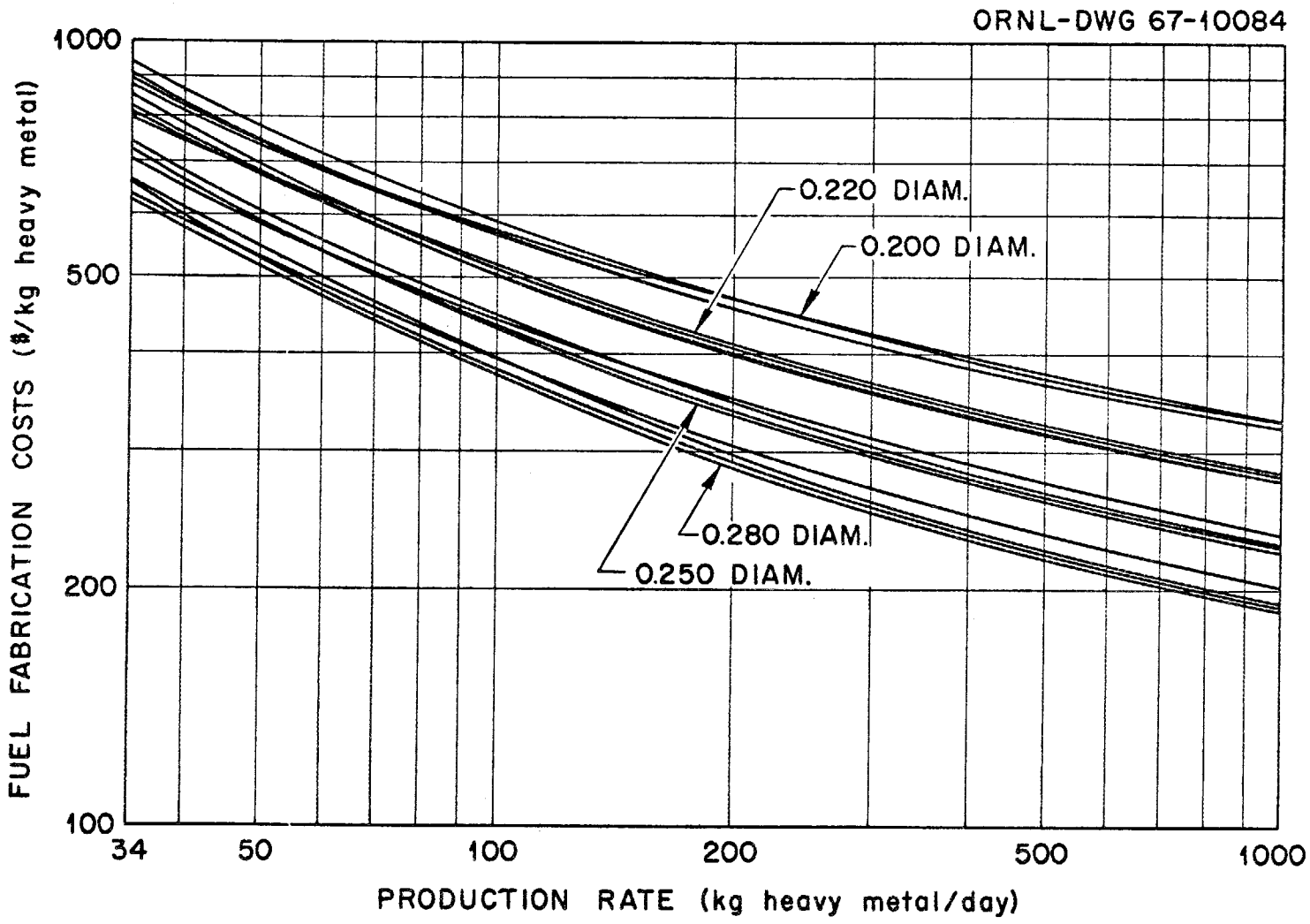

Fig. 18. Effect of Production Rate on $(U,Pu)O_2$ Fuel Element Fabrication Cost.

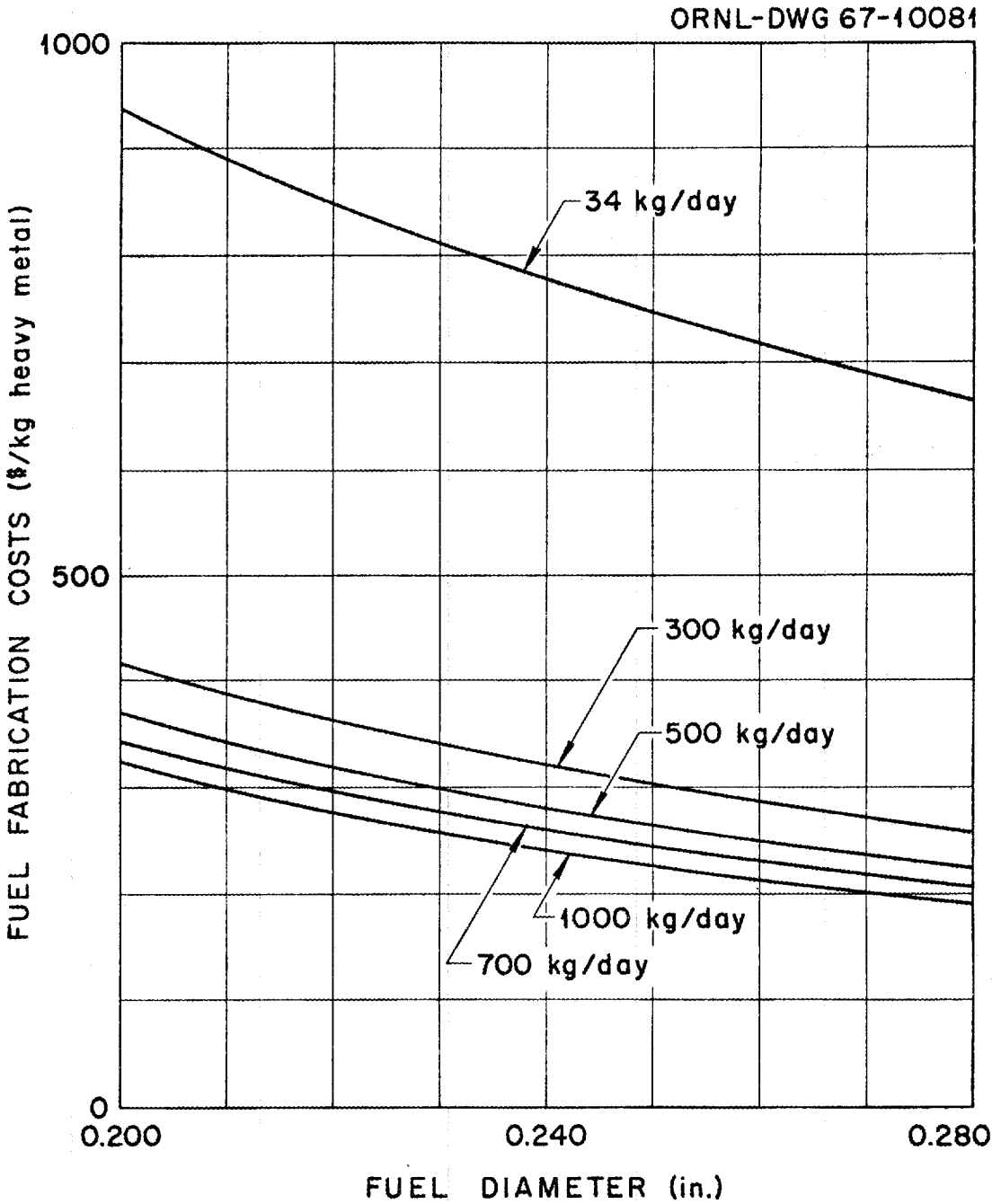

Fig. 19. Effect of Fuel Diameter on Fabrication Costs for Vibratorily Compacted $(U,Pu)O_2$ Fuel.

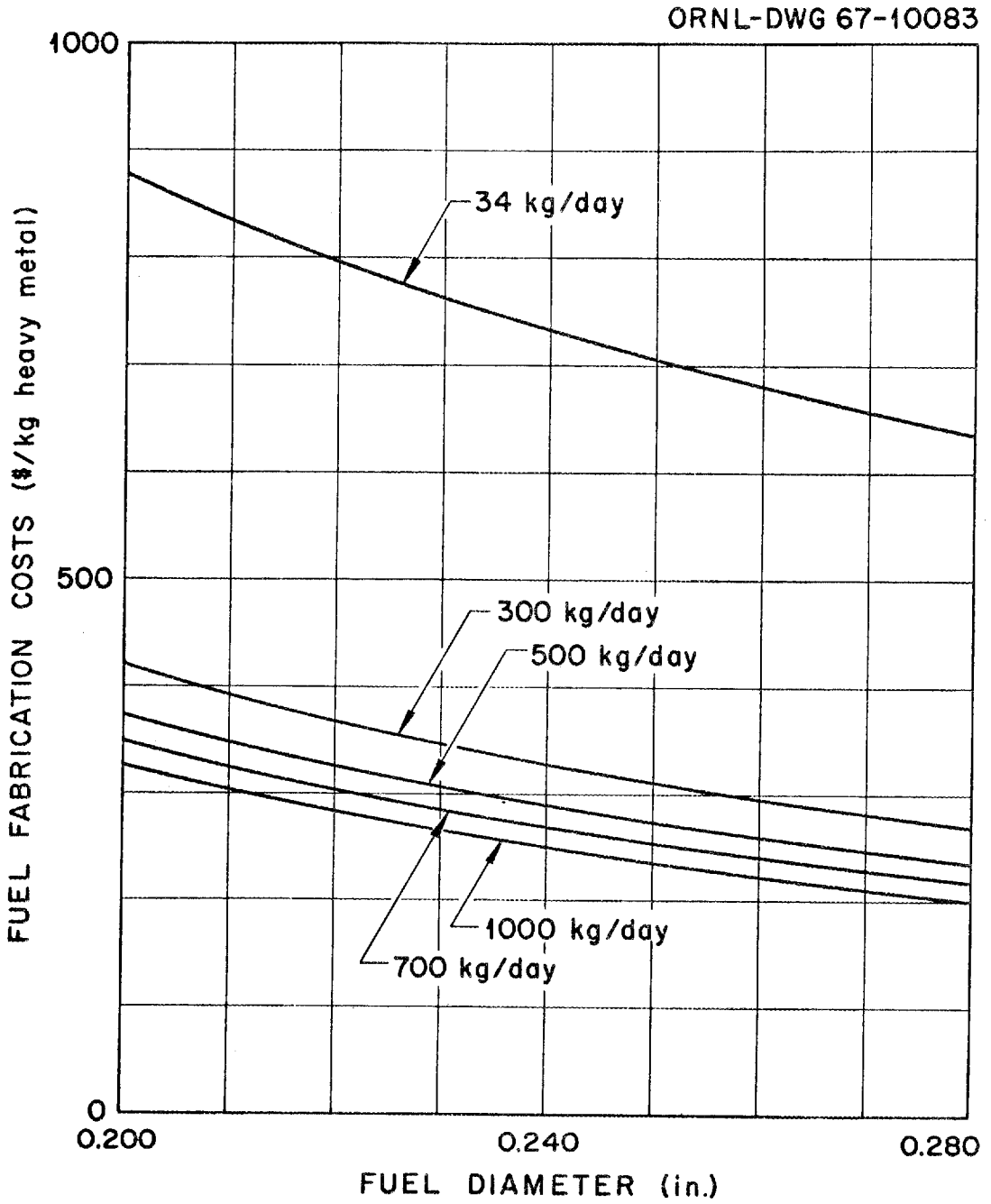

Fig. 20. Effect of Fuel Diameter on Fabrication Costs for Pelletized $(U,Pu)O_2$ Fuel.

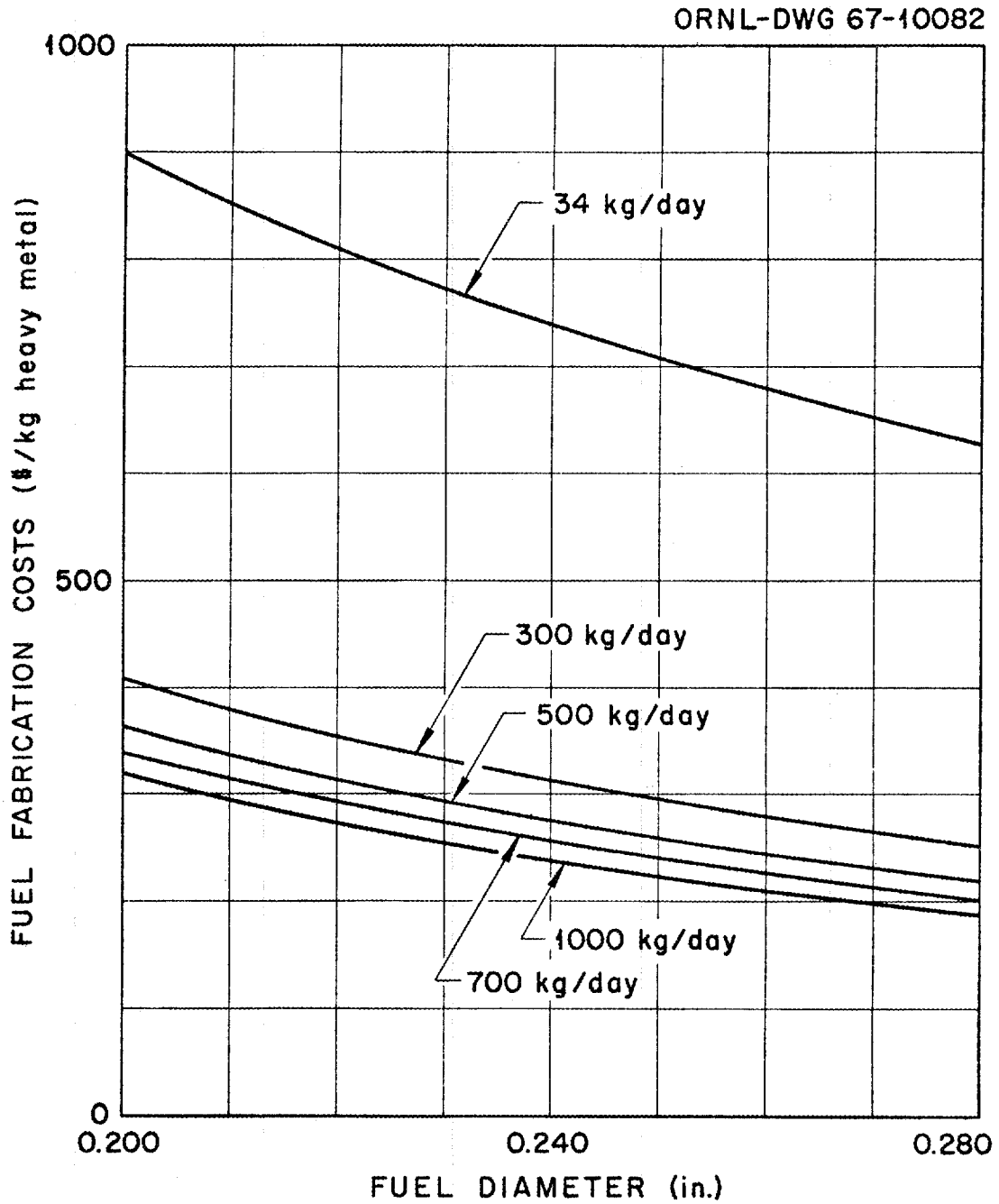

Fig. 21. Effect of Fuel Diameter on Fabrication Costs for the Sphere-Pac Process with $(U,Pu)O_2$ Fuel.

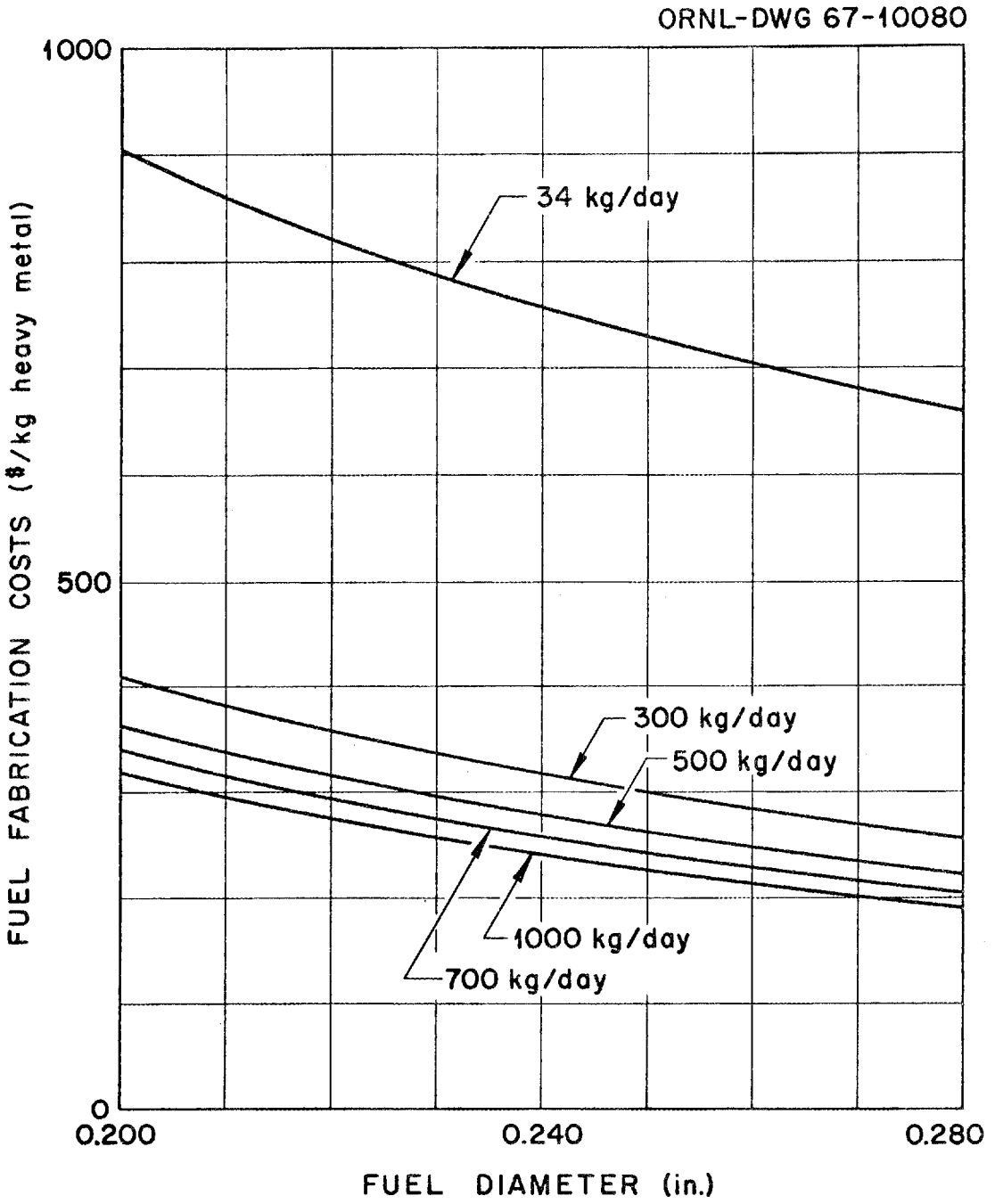

Fig. 22. Effect of Fuel Diameter on Fabrication Costs for Extruded $(U,Pu)O_2$ Fuel.

Table 10. Capital Cost Components of Sol-Gel Fuel Fabrication Plants with an Average Fuel Throughput of 500 kg U+Pu Core Fuel per Day[a]

Component	Cost, $\$ \times 10^6$, for Each Process			
	Sphere-Pac	Vi-Pac	Pellets	Extrusion
Equipment	7.323	7.868	7.580	6.954
Installation	1.245	1.338	1.289	1.183
Instrumentation	1.133	1.218	1.173	1.076
Process and Equipment Design	5.762	6.191	5.964	5.472
Laboratory Equipment	0.888	0.954	0.920	0.844
Building Construction	10.092	10.842	10.446	9.583
Building Design	2.358	2.533	2.441	2.239
Contingency	5.762	6.190	5.964	5.472
Startup Costs	11.404	12.252	11.804	10.829
Nonremote Facility Costs	5.700	5.700	5.700	5.700
Office Equipment	0.234	0.238	0.259	0.248
Total	52.0	55.4	53.6	49.7

[a]For 0.220-in.-OD fuel.

and operating costs are shown in Table 11. Our cost analysis of these four competing processes indicates there is little economic distinction between them.

Summary of Fuel Preparation and Fabrication Costs

As shown in Table 12, which is a summary of all costs for 500-kg of heavy metal per day production rate and for 0.220-in.-diam fuel, sol-gel extrusion and Sphere-Pac have the lowest anticipated cost, $331 per kilogram. The costs of vibratory compaction, $337, and pelletizing, $342, are believed to be discernibly higher than the costs of Sphere-Pac and sol-gel extrusion. The differences in estimated cost are small, however, and subsequent process developments could significantly change these rankings.

Discussion of Results

Pellets, while currently estimated to be most expensive of the four form of fuel to produce, would probably enjoy the highest potential of acceptance by industry at this time. The excellent performance of pelletized fuel in light-water reactors is impressive, and demonstrated performance is certainly a major criterion for commercial application. The pellet process, however, would appear to be one of the most difficult of the competing processes to adapt to remote fabrication, and we judge it to have the least potential for cost reduction.

In our opinion, the sol-gel extrusion process offers the greatest chance for major cost reduction. As previously mentioned, we have assumed that centerless grinding would be required, although dimensional control of the as-sintered body was within ±0.001 in. in our previous testing program with thoria.[18] We consider the probability quite high that further development work could eliminate the need for grinding of the extruded bodies and significantly reduce costs of scrap recovery and fuel losses. (Neither of these costs in included in our current analysis, since we have assumed them to be equivalent for each of the four processes). Since the sol-gel extrusion product is a solid ceramic body, it should

Table 11. Operating Costs of Fuel Fabrication Plants for Four Sol-Gel Processes at 500 kg/day Heavy Metal[a]

Process	Personnel Required		Annual Operating Cost ($)
	Operators	Total	
			$\times 10^6$
Sphere-Pac	315	831	10.8
Vi-Pac	320	845	11.0
Pellets	348	918	12.0
Extrusion	333	878	11.4

[a]For 0.220-in.-OD fuel.

Table 12. Fuel Preparation and Fabrication Costs for Four Sol-Gel Processes at 500 kg/day Heavy Metal[a]

Cost Component	Cost for Each Process, $/kg Heavy Metal			
	Sphere-Pac	Vi-Pac	Pellets	Extrusion
Operating Costs	87.15	88.71	96.74	92.36
Capital Charges	87.97	93.76	90.75	84.07
Fuel Preparation	16.21	15.01	15.01	14.51
Hardware Costs	139.88	139.88	139.88	139.88
Total	331.21	337.36	342.38	330.82

[a]For 0.220-in.-OD fuel.

perform very similarly to pelletized fuel. Its acceptance for industrial use should be second only to that of pellets.

Both Vi-Pac and Sphere-Pac have a subjective disadvantage, since they consist of packed beds of particulate matter. The potential for release of significant quantities of fuel into the coolant in the event of cladding failure is often questioned. Our initial irradiation tests indicate that these fuels form solid bodies when irradiated.[3] Further tests are being conducted to investigate this phenomenon more thoroughly and to define the times and temperatures required for its occurrence. Both Vi-Pac and Sphere-Pac processes are quite adaptable to remote fabrication, and we would judge Sphere-Pac to be the easiest of the four processes to perform in a remote facility.

We conclude now that each of these processes could be an excellent contender for fabrication of fuel for fast reactors. Additional development work is warranted to define more adequately the technical and economic capabilities and limitations of fabrication by Sphere-Pac, Vi-Pac, pelletization, and sol-gel extrusion.

REFERENCES

[1]J. P. McBride et al., "Studies of Sol-Gel Chemistry at the Oak Ridge National Laboratory," paper presented at this symposium; ORNL-TM-1980.

[2]P. A. Haas et al., "Engineering Development of Sol-Gel Processes at the Oak Ridge National Laboratory," paper presented at this symposium; ORNL-TM-1978.

[3]A. R. Olsen et al., "Fabrication and Irradiation Testing of Sol-Gel Fuel at the Oak Ridge National Laboratory," paper presented at this symposium; ORNL-TM-1971.

[4]D. E. Ferguson, "Sol-Gel Technology in the Nuclear Reactor Fuel Cycle," to be published in Progress in Nuclear Energy, Process Chemistry, Vol. 4, Pergamon Press, Inc., New York, N. Y.

[5]R. B. Fitts et al., "Preparation of Ceramic Nuclear Fuels by Sol-Gel Extrusion," paper presented at the symposium on Preparation of Nuclear Fuel Materials, AIChE Meeting, Salt Lake City, Utah, May 21–24, 1967, to be published in proceedings.

[6]F. E. Harrington et al., Fuel Cycle Costs for a Plutonium Recycle System, ORNL-3501 (Jan. 20, 1964).

[7]P. R. Kasten et al., An Evaluation of Heavy-Water-Moderated Organic-Cooled Reactors, ORNL-3921 (January 1967).

[8]M. W. Rosenthal et al., A Comparative Evaluation of Advanced Converters, ORNL-3686 (January 1965).

[9]J. M. Chandler and F. E. Harrington, A Study of Sol-Gel Fuel Preparation Costs for SSCR and HTGR Reactors, ORNL-TM-1109, Rev. (May 1966).

[10]A. L. Lotts and D. A. Douglas, Jr., "Refabrication Technology for the Thorium-Uranium-233 Fuel Cycle," pp. 212–245 in Utilization of Thorium in Power Reactors, Report of a Panel Held in Vienna 14–18 June 1965, International Atomic Energy Agency, Vienna, 1966; ORNL-TM-1141.

[11]A. L. Lotts, D. A. Douglas, Jr., and R. L. Pilloton, "Refabrication Technology and Costs for High-Temperature Gas-Cooled Reactor Fuels," pp. 167–197 in Proceedings of the Conference "Fuel cycles of high temperature gas-cooled reactors," Brussels, June 10–11, 1965 (ed. by D. Tytgat), European Atomic Energy Community (Euratom), Brussels, May 1966. EUR 2780.e.

[12]Brown's Ferry Nuclear Power Station, Tennessee Valley Authority Design and Analysis Report, NP-1625, vol. 1 (1966).

[13]General Electric Company, Handbook of Atomic Power Equipment – General Conditions of Sale; Product Line, Nuclear Boilers, Plants and Fuel, Catalog 8803 (Oct. 24, 1966).

[14]L. L. Bennett, "A Study of the Fuel Value of Uranium-233," Trans. Am. Nucl. Soc. 8(1), 133–134 (1965).

[15]Evaluation of Thorium Fuels for the Heavy Water Organic Cooled Reactor, BAW-393-7 (July 1966).

[16]J. C. Hesson, M. J. Feldman, and L. Burris, Description and Proposed Operation of the Fuel Cycle Facility for the Second Experimental Breeder Reactor (EBR-II), ANL-6605 (April 1963).

[17]A. R. Irvine, A. L. Lotts, and A. R. Olsen, "The Thorium-Uranium Recycle Facility," Trans. Am. Nucl. Soc. 8(2), 614 (1965).

[18]A. L. Lotts and D. A. Douglas, Jr., A Preliminary Study of Fuel Fabrication Costs for Large Heavy Water Moderated Reactors, ORNL-TM-587 (April 1964).

[19]J. J. Varagona, A. L. Lotts, and J. E. Van Cleve, Jr., Time Study of Fuel Rod Fabrication in the Kilorod Facility, ORNL-3740 (October 1965).

[20]Guide to Nuclear Power Cost Evaluation, Fuel Cycle Cost, TID-7025, Vol. 4 (March 15, 1962).

INTERNAL DISTRIBUTION

1–3. Central Research Library
4–5. ORNL – Y-12 Technical Library Document Reference Section
6–25. Laboratory Records
26. Laboratory Records, ORNL RC
27. ORNL Patent Office
28. R. E. Adams
29. G. M. Adamson, Jr.
30. H. Beutler
31. S. E. Bolt
32. E. S. Bomar
33. W. D. Bond
34. G. E. Boyd
35. R. E. Brooksbank
36. K. B. Brown
37. J. M. Chandler
38. S. D. Clinton
39. J. H. Coobs
40. C. M. Cox
41. F. L. Culler
42. J. E. Cunningham
43. D. E. Ferguson
44. R. B. Fitts
45. J. H Frye, Jr.
46. F. J. Furman
47. P. A. Haas
48. R. L. Hamner
49. W. O. Harms
50. F. E. Harrington
51. C. C. Haws, Jr.
52–54. M. R. Hill
55. A. R. Irvine
56. F. J. Kitts
57. J. A. Lane
58. J. M. Leitnaker
59. R. E. Leuze
60. E. L. Long, Jr.
61–65. A. L. Lotts
66. H. G. MacPherson
67. J. P. McBride
68. R. W. McClung
69. K. H. McCorkle
70. W. T. McDuffie
71. D. L. McElroy
72. A. B. Meservey
73. C. S. Morgan
74. J. P. Moore
75–94. A. R. Olsen
95. P. Patriarca
96. W. H. Pechin
97. J. W. Prados
98. R. B. Pratt
99. J. M. Robbins
100. J. T. Roberts
101. M. W. Rosenthal
102. A. D. Ryon
103. R. Salmon
104. J. L. Scott
105. J. D. Sease
106. J. G. Stradley
107. D. B. Trauger
108. W. E. Unger
109–128. T. N. Washburn
129. A. M. Weinberg
130. J. R. Weir, Jr.
131. M. E. Whatley
132–141. R. G. Wymer

EXTERNAL DISTRIBUTION

142–145. F. W. Albaugh, Battelle, PNL
146–148. R. J. Allio, Westinghouse Atomic Power Division
149. A. Amorosi, Argonne National Laboratory, LMFBR Program Office
150. R. D. Baker, Los Alamos Scientific Laboratory
151. R. W. Barber, AEC, Washington
152. W. M. Breazeale, Babcock and Wilcox, Lynchburg, Va.
153. L. Brewer, University of California, Berkeley
154. L. Burris, Argonne National Laboratory, LMFBR Program Office
155. V. P. Calkins, GE, NMPO

156. W. Cashin, Knolls Atomic Power Laboratory
157. S. Christopher, Combustion Engineering, Inc.
158. D. B. Coburn, General Atomic
159. D. F. Cope, RDT, SSR, AEC, Oak Ridge National Laboratory
160. G. W. Cunningham, AEC, Washington
161. C. B. Deering, AEC, ORNL Site Representative.
162. G. K. Dicker, Division of Reactor Development and Technology, AEC, Washington
163. D. E. Erb, Division of Reactor Development and Technology, AEC, Washington
164. E. A. Evans, GE, Vallecitos
165. W. C. Francis, Idaho Nuclear Corporation
166. A. J. Goodjohn, General Atomic
167. R. G. Grove, Mound Laboratory
168. D. H. Gurinsky, Brookhaven National Laboratory
169. A. N. Holden, GE, APED
170–172. J. S. Kane, Lawrence Radiation Laboratory, Livermore
173. H. Kato, U.S. Department of the Interior, Bureau of Mines
174. L. K. Kellman, Argonne National Laboratory, LMFBR Program Office
175. E. A. Kintner, Fuel Fabrication Branch, AEC, Washington
176. J. H. Kittel, Argonne National Laboratory
177. E. J. Kreih, Westinghouse, Bettis Atomic Power Laboratory
178. W. J. Larkin, AEC, Oak Ridge Operations
179. W. L. Larsen, Iowa State University, Ames Laboratory
180. J. A. Lieberman, AEC, Washington
181. P. J. Levine, Westinghouse Advanced Reactor Division, Waltz Mill Site, Madison, Pa.
182. J. J. Lombardo, NASA, Lewis Research Center
183. E. D. Lynch, Babcock and Wilcox
184. J. H. MacMillan, Babcock and Wilcox
185. C. L. Mathews, AEC, ORNL Site Representative
186. R. Mayfield, Argonne National Laboratory
187. M. McGurty, GE, NMPO
188. W. H. McVey, AEC, Washington
189. J. Morabito, AEC, Washington
190. M. Nevitt, Argonne National Laboratory
191. R. E. Pahler, Division of Reactor Development and Technology, AEC, Washington
192. S. Paprocki, Battelle Memorial Institute
193. D. Ragone, General Atomic
194. W. E. Ray, Westinghouse Advanced Reactor Division, Waltz Mill Site, Madison, Pa.
195. W. E. Roake, Battelle, PNL
196. B. Rubin, Lawrence Radiation Laboratory, Livermore
197. J. W. Ruch, AEC, Oak Ridge Operations
198. H. Schneider, AEC, Washington
199. F. C. Schwenk, Division of Reactor Development and Technology, AEC, Washington
200–202. J. M. Simmons, Division of Reactor Development and Technology, AEC, Washington
203. E. E. Sinclair, AEC, Washington

204. L. E. Steele, Naval Research Laboratory
205. R. H. Steele, Division of Reactor Development and Technology, AEC, Washington
206. W. F. Sheely, Division of Research, AEC, Washington
207. A. Strasser, United Nuclear Corporation
208. A. Taboada, Division of Reactor Development and Technology, AEC, Washington
209. A. Van Echo, Division of Reactor Development and Technology, AEC, Washington
210. R. Van Tyne, Illinois Institute of Technology Research Institute
211. B. Vondra, NUMEC, Apollo, Pa.
212. C. E. Weber, Atomics International
213. J. F. Weissenberger, RDT, OSR, GE, NMPO
214. G. W. Wensch, Division of Reactor Development and Technology, AEC, Washington
215. G. A. Whitlow, Westinghouse Advanced Reactor Division, Waltz Mill Site, Madison, Pa.
216. M. J. Whitman, AEC, Washington
217. E. A. Wright, AEC, Washington
218. E. L. Zebroski, General Electric, San Jose
219. Laboratory and University Division, AEC, Oak Ridge Operations
220–234. Division of Technical Information Extension
235–334. Segreteria Symposium Nucleare CNEN – c/o Unione Industriale, Via Fanti, 17 – Torino, Italy