LOCKHEED MARTIN ENERGY RESEARCH LIBRARIES

3 4456 0513478 9

DOCUMENT COLLECTION

OAK RIDGE NATIONAL LABORATORY
operated by
UNION CARBIDE CORPORATION
NUCLEAR DIVISION
for the
U.S. ATOMIC ENERGY COMMISSION

ORNL-TM-2011

COPY NO. - 52

DATE - September 27, 1967

LIBRARY LOAN COPY
DO NOT TRANSFER TO ANOTHER PERSON

UCN-7969
(3 3-67)

ALPHA AIR MONITOR FOR ^{239}PU

E. D. Gupton
Health Physics Division

ABSTRACT

An Alpha Air Monitor which will reliably detect 8 MPC-hrs of ^{239}Pu in the presence of radon and daughters, in concentrations which vary by factors of more than 100, and in varying, moderate levels of gamma radiation, has been developed and field tested at Oak Ridge National Laboratory. Beginning with an experimental device in 1956, more refined models have been progressively designed and tested. The latest model has good sensitivity and reliability with uncomplicated design and operational features. The principal of operation is based on the alpha-to-beta particle emission-rate ratio of the collected air sample.

NOTICE This document contains information of a preliminary nature and was prepared primarily for internal use at the Oak Ridge National Laboratory. It is subject to revision or correction and therefore does not represent a final report.

LEGAL NOTICE

This report was prepared as an account of Government sponsored work. Neither the United States, nor the Commission, nor any person acting on behalf of the Commission:

A. Makes any warranty or representation, expressed or implied, with respect to the accuracy, completeness, or usefulness of the information contained in this report, or that the use of any information, apparatus, method, or process disclosed in this report may not infringe privately owned rights; or

B. Assumes any liabilities with respect to the use of, or for damages resulting from the use of any information, apparatus, method, or process disclosed in this report.

As used in the above, "person acting on behalf of the Commission" includes any employee or contractor of the Commission, or employee of such contractor, to the extent that such employee or contractor of the Commission, or employee of such contractor prepares, disseminates, or provides access to, any information pursuant to his employment or contract with the Commission, or his employment with such contractor.

INTRODUCTION

Monitoring air for those alpha-particle-emitting radionuclides that are more hazardous than ^{222}Rn and its daughters is complicated by the universal presence of radon in the air near the surface of the earth. The concentration of radon and its daughters in air varies both with the geographical location and with the weather, and indoors it depends on the construction materials that enclose it. In some locations it may vary by a factor of 10 or more within a few hours.

The RPG* level for ^{239}Pu in air is equivalent to 4.4 dis/(min)(m^3); the recommended level for ^{222}Rn plus its daughters is much larger, being 6.6×10^4 dis/(min)(m^3 of air). In many localities the radon daughters may reach a concentration which, in terms of disintegrations per minute, is equivalent to 200 or more times the Guide level for ^{239}Pu, although this concentration is only about 1% of the recommended level for radon plus its daughters.

Detectable differences between the daughters of radon and ^{239}Pu are, for example, that (1) the alpha particles are of different energies, (2) the decay of the radon daughters is accompanied by beta activity, (3) the radioactive half-lives are much shorter for radon daughters than for ^{239}Pu, and (4) according to some investigators, ^{239}Pu is associated with particles of greater mass than are radon daughters.

One rather accurate method for assaying airborne long-lived radioactivity is to sample the air and to analyze the sample after the shorter-lived radionuclides have decayed. In practice it is not necessary to have immediate knowledge of airborne concentrations in the neighborhood

*Radiation Protection Guide, Federal Radiation Council.

LOCKHEED MARTIN ENERGY RESEARCH LIBRARIES

3 4456 0513478 9

of Guide levels, as such levels may exist for relatively long periods of time without overexposure of the worker. Certainly it is desirable to find and control such conditions, but there is time allowable to await radioactive decay of the radon daughters in air samples which may have been collected, with subsequent positive analysis of the more hazardous (than radon) materials. However, this method does not give immediate knowledge of hazards as they may exist at levels up to many times the Guide level.

Recent work on this problem has included the development of techniques based on (1) pulse-height discrimination of the alpha particles emitted from a collected sample,[1] (2) radioparticle emission coincidence,[2] and (3) the alpha-to-beta particle emission-rate ratio.[3,4] A practical air monitor based on this third technique has been designed, fabricated and field-tested.

DESCRIPTION

Fig. 1 is a front view of the monitor, Fig. 2 is a close-up view of the annunciator, panel meters and recorders and in Fig. 3 is shown the filter tape and detector assembly. Fig. 4 is a diagram of the main operational features.

---

[1] W. A. Phillips and C. L. Lindeken, "Plutonium Alpha Air Monitor Using a Solid State Detector", Health Phys., 9(3):299-303 (March 1963).

[2] D. P. Brown, M. O. Rankin, C. D. Boyne, and W. G. Spear, "A Coincidence Count Alpha Particulate Air Monitor", USAEC Report HW-75384, Hanford Atomic Products Operation, Jan. 3, 1963.

[3] C. L. Lindeken and D. N. Montan, "Alpha Air Monitoring with α/β Ratio Compensation for Natural Interference", USAEC Report UCRL-5979, University of California Lawrence Radiation Laboratory, Feb. 5, 1962.

[4] Oak Ridge National Laboratory, "Applied Health Physics Annual Report for 1958", USAEC Report ORNL-2777, p. 47, Nov. 18, 1960.

PHOTO 84267
EMERGENCY CALLS
AMBULANCE
FIRE
RADIATION
TELEPHONE
3-6358
OR PULL FIRE ALARM BOX
TELL

Figure 1

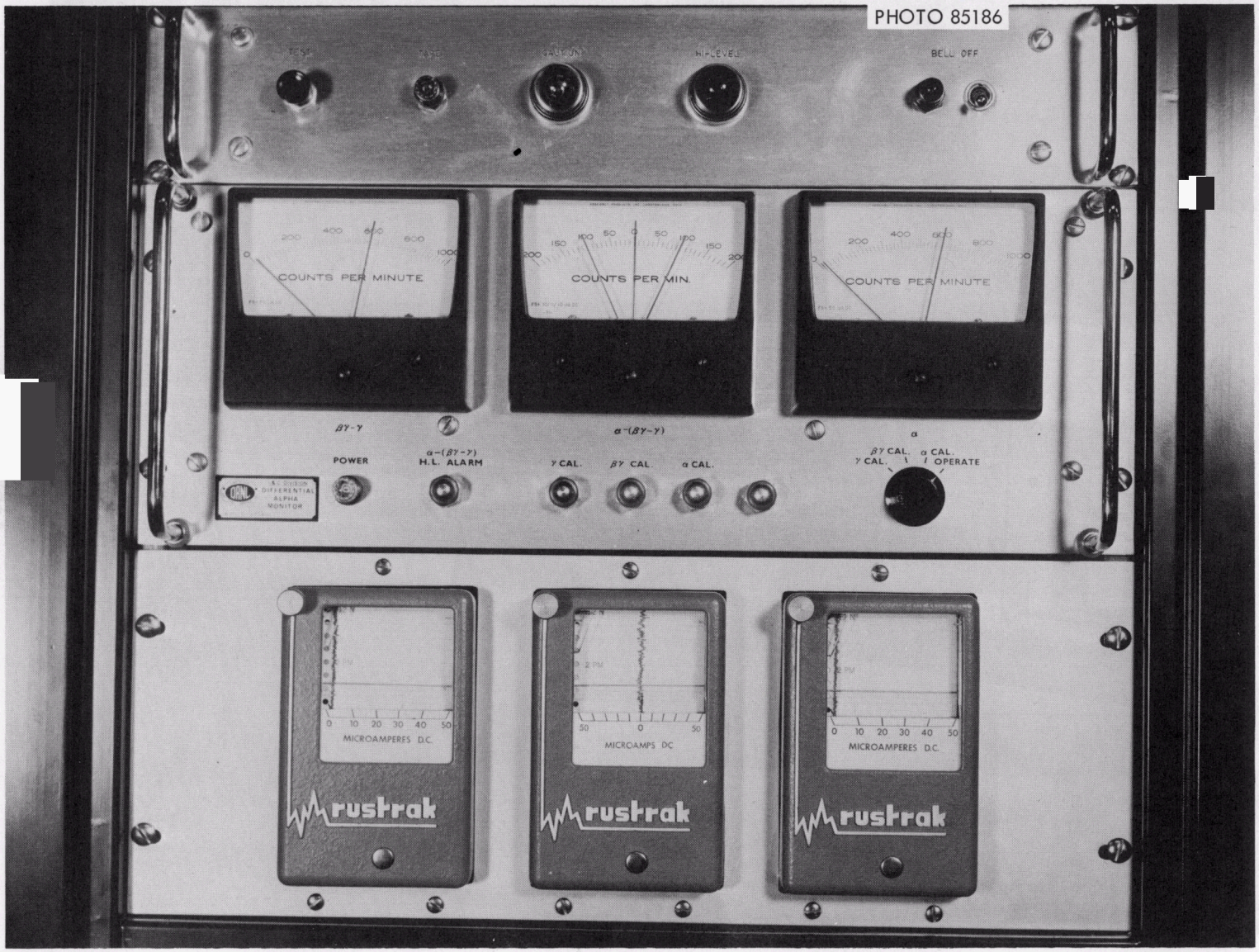
PHOTO 85186
TEST
HI-LEVEL
BELL OFF
COUNTS PER MINUTE
COUNTS PER MIN.
COUNTS PER MINUTE
βγ-γ
α-(βγ-γ)
α
POWER
α-(βγ-γ)
H.L. ALARM
γ CAL.
βγ CAL.
α CAL.
βγ CAL.
γ CAL.
α CAL.
OPERATE
DIFFERENTIAL
ALPHA
MONITOR
MICROAMPERES D.C.
MICROAMPS DC
MICROAMPERES D.C.
rustrak
rustrak
rustrak

Figure 2

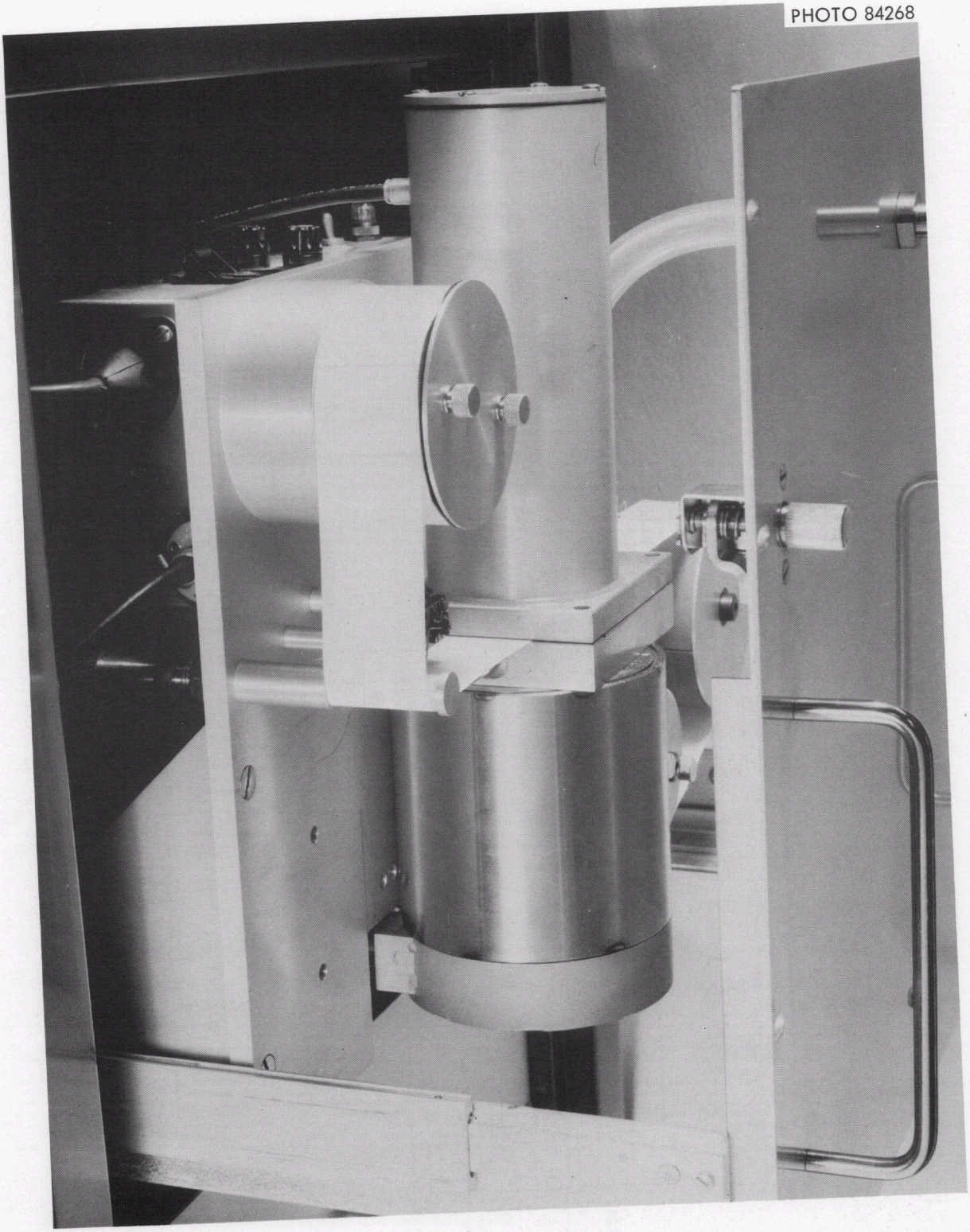

Figure 3

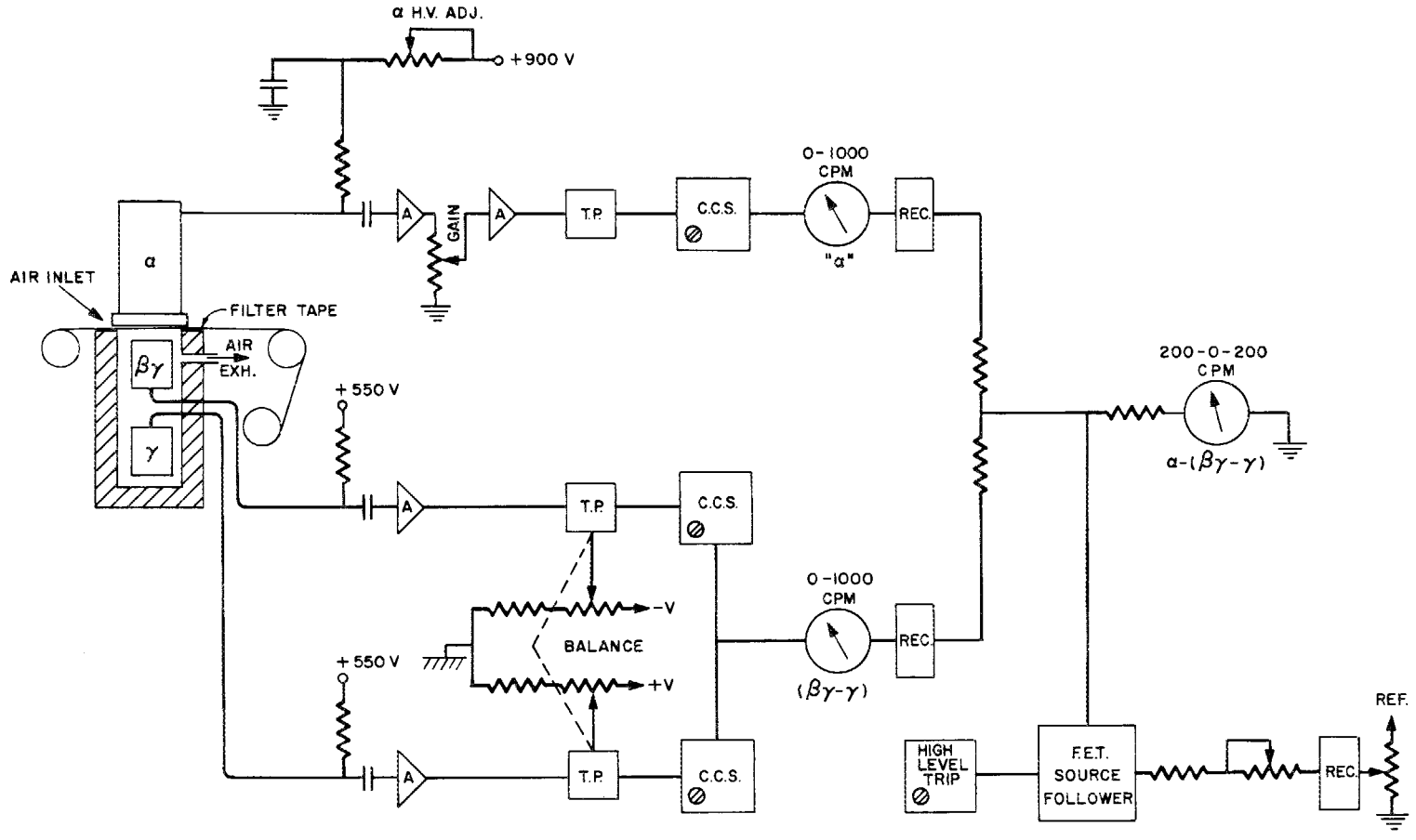

A — AMPLIFIER
T.P.- TRIGGER PAIR
F.E.T.- FIELD EFFECT TRANSISTOR
C.C.S.-CONSTANT CURRENT STORAGE

Figure 4

With reference to Fig. 4, the air to be sampled is drawn thru a filter tape so that the sample, as it is collected, is "viewed" by an alpha scintillation counter, and a mica window GM counter. A second, duplicate GM counter which does not "see" the filter is housed with the first GM counter. The GM counters are shielded by one inch of lead, except at the filter tape area. The tape is continuously driven at a rate of 1-1/4 inches per hour. The air flow rate is 50 l/m.

The counting rates from the three detectors (α, $\beta+\gamma$ and γ) are combined in the counting rate circuitry so that the count rate from gamma background is subtracted from the gross counting rate of the sample-counting GM counter, then the net beta count rate is subtracted from the alpha count rate. When properly calibrated, this latter difference is approximately zero for all naturally occurring radon conditions at ORNL, and any net difference will be due to radioactive materials other than radon.

It has been demonstrated that the alpha emission to beta emission ratio for radon daughters is essentially constant over a wide range of concentrations and relative ages of radon-daughter mixtures. Thus, if this constant emission ratio is converted, by suitable radiation detectors, to a constant counting rate ratio, and if the counting rate ratio may be adjusted mechanically-electrically to equal one, then the difference in the adjusted counting rates will be zero when only naturally occurring, airborne radionuclides are collected. The principal, unique feature of this air monitor is that the α/β counting rate ratio for collected radon daughters is unity, so that arithmetic differences rather than ratios of counting rates are directly obtained and displayed.

RESULTS

The instrument has been in operation for almost two years in a facility in which plutonium and transplutonic isotopes are chemically processed, and which is subject to high concentrations of naturally occurring airborne radioactivity. It has been in service almost 100% of the time and has required only minimal maintenance.

Tests have been performed with simulated air samples which contained normal uranium, ^{241}Am, ^{239}Pu, ^{237}Np and ^{244}Cm. The sensitivity for positively discriminating 100 d/m of ^{239}Pu from radon at various concentrations was found to be as shown in Table I, where 8 MPC-hrs for ^{239}Pu is taken as

$$2 \times 10^{-12}\ \mu c/cc \times 10^{7}\ cc/8\ hrs, \text{ or}$$

2×10^{-5} μc, the permissible inhalation intake for 8 hours.

DISCUSSION

Most any alpha air monitoring instrument may be adequate for detecting 200 or more times MPC of a more hazardous alpha emitter in the presence of radon, as the alpha particle concentration from atmospherically associated radon would likely be no greater than that of the more hazardous material. For concentrations of hazardous materials at less than 5 times the MPC level, a few days may be allowable for acquiring knowledge of the concentration by the radon decay method. Thus, the range of concentrations for which specialized instruments or techniques are required for determining the hazard within a reasonable time is that from about 5 to 200 times MPC.

TABLE I

$\mu c/cc$ ^{239}Pu	Factor of MPC	Elapsed Time for Alarm*	Elapsed Time To Inhale 8 MPC-Hrs.	Elapsed Time To Inhale Quarterly MPC
45×10^{-11}	225	2 min.	2.1 min.	> 2 hours
23×10^{-11}	115	4 min.	4.2 min.	> 4 hours
9×10^{-11}	45	10 min.	10.7 min.	> 11 hours
4.5×10^{-11}	22	20 min.	21.4 min.	~ 23 hours
3×10^{-11}	15	30 min.	32.1 min.	~ 35 hours

*Assuming 2 minutes as minimum for collection and response, and 100 d/m of ^{239}Pu collected on the filter, the air monitor will alarm within this elapsed time after start of collection.

Since it is permissible (MPE) to be exposed within a calendar quarter to 1.3×10^{-3} μc of ^{239}Pu, which may result from a single intake, chronic exposure at a concentration of 2×10^{-12} $\mu c/cc$, or some function of concentration and time duration of exposure within these limiting conditions, it should not be necessary for an air monitor to be capable of giving rapid knowledge of concentrations at MPC levels. Some practical values of the fraction of MPC in the air versus the elapsed time allowable for determination of the concentration, assuming 8 hours of exposure in each 24 hour interval, are shown in Table II.

It may be seen that an air monitor which will detect concentrations such that 100 MPC-hrs of exposure is not exceeded will provide information which is adequate to control any acute exposure to within 20 percent of the permissible quarterly limit (MPE), with the assumption that the

TABLE II

Factor of MPC	Elapsed Time	MPC-hrs* of Exposure	Fraction of Quarterly MPC
1	2 weeks	80	0.15
10	24 hours	80	0.15
100	1 hour	100	0.2
1000	6 minutes	100	0.2

* 520 MPC-hrs of exposure are permissible within a calendar quarter.

worker and the air monitor are exposed to the same concentrations. Thus, an air monitor which will detect and provide information of 8 MPC-hrs will allow the control of acute exposures to within less than 2 percent of the MPE.

From the standpoint of economy and accuracy, such air monitors might be limited in number and used primarily for detecting acute, significant releases of airborne materials. Simple air samplers, rather than monitors, from which the filters are removed and later analyzed are quite adequate for use in monitoring low, chronic levels of airborne materials.

CONCLUSION

The air monitor described is relatively simple in design and moderate in cost compared with many devices which attain similar results. It will, except in explosive-type releases of activity, provide information which is adequate to control acute exposures to airborne ^{239}Pu to within less

than 2 percent of the quarterly MPE. It discriminates most of the more hazardous alpha emitters from naturally occurring materials and is very little affected by variable, low level gamma radiation in its vicinity.

Because the instrument responds to both alpha and beta radioactivity, with separate read-out and alarm for each, it may be used for monitoring both types of hazards.

ACKNOWLEDGEMENT

The author wishes to acknowledge the contributions to this project by members of the Instrumentation and Controls Division, particularly those of H. N. Wilson for the development and design of the electronic components and of R. K. Abele for the design of the detector system.

INTERNAL DISTRIBUTION

1. H. H. Abee
2. R. K. Abele
3. R. G. Affel
4. T. A. Arehart
5. D. E. Arthur
6. J. A. Auxier
7. J. C. Bailey (ORGDP)
8. C. J. Borkowski
9. F. R. Bruce
10. T. J. Burnett
11. R. L. Clark
12. W. B. Cottrell
13. F. L. Culler
14. D. M. Davis
15. D. E. Ferguson
16. B. R. Fish
17. J. H. Frye, Jr.
18-37. E. D. Gupton
38. T. W. Hungerford
39. L. C. Johnson
40. W. H. Jordan
41. F. W. Manning
42. W. T. Martin
43. C. H. Miller
44. K. Z. Morgan
45. W. S. Snyder
46. E. G. Struxness
47. E. H. Taylor
48. B. T. Walters
49. A. D. Warden
50. C. M. West (Y-12)
51. H. N. Wilson
52-53. Central Research Library
54. Document Reference Section
55-57. Laboratory Records Department
58. Laboratory Records, ORNL R.C.
59. ORNL Patent Office

EXTERNAL DISTRIBUTION

60-74. Division of Technical Information Extension
75. Laboratory and University Division, ORO