LOCKHEED MARTIN ENERGY RESEARCH LIBRARIES
3 4456 0515946 8

ENTRAL RESEARCH LIBRARY
DOCUMENT COLLECTION

2

ORNL-4099
UC-32 – Mathematics and Computers

A FORTRAN PROGRAM FOR CALCULATING THE SOLID ANGLE SUBTENDED BY ONE CIRCULAR DISC AT ANOTHER

I. R. Williams
A. M. Craig, Jr.
C. L. Thompson

CENTRAL RESEARCH LIBRARY
DOCUMENT COLLECTION
LIBRARY LOAN COPY
DO NOT TRANSFER TO ANOTHER PERSON
If you wish someone else to see this document, send in name with document and the library will arrange a loan.

OAK RIDGE NATIONAL LABORATORY
operated by
UNION CARBIDE CORPORATION
for the
U.S. ATOMIC ENERGY COMMISSION

Printed in the United States of America. Available from Clearinghouse for Federal Scientific and Technical Information, National Bureau of Standards, U.S. Department of Commerce, Springfield, Virginia 22151
Price: Printed Copy $3.00; Microfiche $0.65

LEGAL NOTICE

This report was prepared as an account of Government sponsored work. Neither the United States, nor the Commission, nor any person acting on behalf of the Commission:

A. Makes any warranty or representation, expressed or implied, with respect to the accuracy, completeness, or usefulness of the information contained in this report, or that the use of any information, apparatus, method, or process disclosed in this report may not infringe privately owned rights; or

B. Assumes any liabilities with respect to the use of, or for damages resulting from the use of any information, apparatus, method, or process disclosed in this report.

As used in the above, "person acting on behalf of the Commission" includes any employee or contractor of the Commission, or employee of such contractor, to the extent that such employee or contractor of the Commission, or employee of such contractor prepares, disseminates, or provides access to, any information pursuant to his employment or contract with the Commission, or his employment with such contractor.

ORNL-4099

Contract No. W-7405-eng-26

CHEMISTRY DIVISION
MATHEMATICS DIVISION

A FORTRAN PROGRAM FOR CALCULATING THE SOLID ANGLE SUBTENDED BY ONE CIRCULAR DISC AT ANOTHER

I. R. Williams, A. M. Craig, Jr.,
and C. L. Thompson

APRIL 1967

OAK RIDGE NATIONAL LABORATORY
Oak Ridge, Tennessee
operated by
UNION CARBIDE CORPORATION
for the
U.S. ATOMIC ENERGY COMMISSION

LOCKHEED MARTIN ENERGY RESEARCH LIBRARIES
3 4456 0515946 8

A Fortran Program for Calculating the Solid Angle Subtended by One Circular Disc at Another

I. R. Williams
Chemistry Division

A. M. Craig, Jr., and C. L. Thompson
Mathematics Division
Oak Ridge National Laboratory
Oak Ridge, Tennessee

ABSTRACT

A Fortran II program is described to perform numerical integrations by the Monte Carlo method to calculate the solid angle presented by a circular aperture facing another at any obliquity.

INTRODUCTION

A knowledge of the solid angle subtended by a circular disc to another which faces it from any direction is frequently of value in physics. There are, for instance, two important types of measurements in nuclear physics and associated technology. The first is in absolute radioactive source strength measurements[1] where the source is laid down uniformly on a circular disc immediately below the detector which has a circular window. The second situation is in absolute differential cross-section measurements, where it is common to use a detector with a circular collimator to record the scattered and transmitted particles from a thin target bombarded by a beam of particles that has a circular profile.

Exact calculation[2-10] of the solid angle by anti-differentiation, except for the case of a point source, is prohibitively difficult. However a numerical integration by the Monte Carlo method, performed on a computer, can calculate the solid angles to any desired degree of accuracy.

DESCRIPTION OF THE CALCULATION

For the sake of simplicity the calculation will be described in terms of a radioactive source laid down with constant specific activity on a circular disc. Radiations are emitted isotropically and those striking a circular detector that faces the center of the source are recorded with 100% efficiency. The situation where the detector facing the source can be placed anywhere on a semicircle whose center is at the center of the source, is simulated. However, the case where the detector is parallel to, and has its center on the normal through the center of the source will be first described.[11] Fig. 1 shows this case and also serves to help define symbols used in the text.

An expression for the solid angle subtended by one disc at the other is

$$\Omega = \int_{o}^{R_S} \frac{2\pi\Omega(r)\cdot r}{\pi R_S^2} \cdot dr \qquad (1)$$

Only an approximate[2] solution of this equation is possible except for the case of a point source when

$$\Omega_{PS} = 2\pi[1 - (1 + R_D/D)^2)^{-1/2}] \qquad (2)$$

However a simplified expression for the geometry, which is approximately correct over a range of source-to-detector distances, has been quoted by Burtt.[12] In addition Konijn and Tollander[13] have used a computer to numerically solve the integrals in an approximate equation and have tabulated the results for a range of R_S/R_D and D/R_D. However their data have rather wide (> 10%) separations between values of the parameter and is applicable only when the source is smaller than the detector. If the case is considered where the detector is moved around the arc of a circle of radius D but still faces the source, the calculation by the use of calculus is even more difficult.[14] Equation (1) still applies but $\Omega(r)$ has a different form, namely $\Omega(r,\theta)$.

A more elementary method of obtaining the source-to-detector geometry to any required degree of accuracy is to use the Monte Carlo method[15] to perform a numerical integration. The essence of the method is that a computer is made to perform a gedanken experiment to simulate the isotropic emission of particles uniformly located on one surface of a hypothetical disc. The computer program uses 2 random numbers to give the point of origin of the disintegration and 2 more random numbers to obtain the direction cosines. The program then ascertains whether or not a line with the randomly selected direction originating at the randomly chosen point on the disc intersects a circular disc representing the detector. This sequence is iterated as many times as desired and finally the ratio of the number of hits to tries, multiplied by 2π yields the solid angle in steradians.

DESCRIPTION OF THE PROGRAM

The input data must be keypunched on one card per case according to the format of statement 1 of the program. The source radius (RS), detector radius (RD), separation (D), angular displacement (THETA), the coefficient of variation (COEF) and the number of iterations (NMAX) are required to fill the 6 fields. COEF gives the accuracy required, for example, 0.01 will yield a standard deviation (SIGMA) of 1% in the answer (P). NMAX is the number of iterations (compare, radioactive disintegrations) to be performed and its choice controls

the time and accuracy of the calculation. Approximately one minute on a CDC 1604A computer is needed to perform 10,000 iterations; an IBM 360/75 is seven times faster. For the case when RD > RS and THETA = 0, a suitable choice of NMAX is (1-3) x 10^4; however if the source is bigger than the detector a larger NMAX must be chosen to obtain the same accuracy.

To increase the speed of calculation the simulated radiations are delimited to a cone with a solid angle (4π ETA) that encompasses the detector (see Fig. 1 for the case where THETA = 0).

$$4\pi \text{ ETA} = 2\pi(1 - C) \tag{3}$$

where C is the cosine of half the apex angle of the cone and is given by

$$C = D(R_S + R_D)^2 + D^2)^{-1/2} \tag{4}$$

The product of the ratio of the number of hits to tries (P_1) and ETA is the geometry factor (P). The maximum possible value of P is 0.5.

The method of calculation, written below in FORTRAN, will be outlined because it is the simplest case of a program that can be modified in many ways. For instance, the shapes of the source or detector could be changed;[3] they could be constructed as a simple three dimensional solid,[16,17] or made to possess a detector efficiency other than 1.0. In addition the angular distribution of the radiations could be made non-isotropic,[13] or the distribution of points on the source disc could be made non-uniform to simulate, for example, a decrease in radioactivity towards the periphery.[18]

Statements 10 to 14 randomly select a direction within the solid angle, 4πETA, which is given by the direction cosines U and V. The random number RANF(0) is part of the standard software provided by many computers; if such a facility is not available a simple eight statement, zero to one, random number generating subprogram can be used (see Appendix I) and this function (FLTRNF(X)) can be called in place of RANF(0).

Statements 20-23 choose a point (X,Y) at random, with equal probability per unit area, on the source disc from which the line, whose direction has been obtained, originates. After this, it is ascertained if the line intersects the detector by determining if the point of intersection (XF, YF) with the plane of the detector is within the circle of radius RD(statement 37). If a hit is scored it is recorded in statement 3. The following FORTRAN statements (4 to 6) test to see if sufficient accuracy has been obtained and if not to re-enter the DO loop at statement 2.

```
      PRINT 30
   30 FORMAT(1H1,6X,2HRS,7X,2HRD,7X,1HD,6X,5HTHETA,9X,1HP,9X,5HSIGMA,9X,
     C4HNMAX/)
   31 LOW=1
      K=0
      NMIN = 10000
      IHIT = 0
      READ 1  RS,RD,D,THETA,COEF,NMAX
    1 FORMAT(5F8.3,I8)
      T=(THETA/180.)*3.14159265
      SINT = SINF(T)
      SINT2=D/SQRT(D**2+RD**2)
      IF(SINT2.LT.SINT)33,35
   33 PRINT 34
   34 FORMAT(1H ,25HDETECTOR PARTIALLY HIDDEN)
      K = 1
      XHID=-D*COSF(T)/SINT
   35 D1 = D - RS*SINT
      C=D1/SQRT((RS+RD)**2+D1**2)
      ETA = 0.5*(1.0 - C)
    2 DO 4 I = LOW,NMIN
   10 W = C + RANF(0)*(1.0 - C)
      RHO = SQRT(1.0 - W**2)
      TAU = (2.0*RANF(0) - 1.0)*3.14159265
      U = RHO*COS(TAU)
   14 V = RHO*SIN(TAU)
   20 R = (1.0 - RANF(0)**2)*RS
      PHI = 6.28318531*RANF(0)
      Y = R*SIN(PHI)
   23 X = R*COS(PHI)
      D2 = D + X*SINT
      RL = D2/W
      YF = Y + RL*V
      XF = X + RL*U
      Z = SQRT(XF**2 + YF**2)
      IF(K.EQ.0)37,36
   36 IF(Z.GT.RD.OR.XF.LT.XHID)4,3
   37 IF(Z.GT.RD)4,3
    3 IHIT = IHIT + 1
    4 CONTINUE
      TOTAL = NMIN
      PI = FLOATF(IHIT)/TOTAL
      SIGMAI = SQRT((PI*(1.0 - PI))/TOTAL)
      IF((SIGMAI/PI).GT.COEF)5,8
    5 LOW = NMIN
      NMIN = NMIN + 1000
      IF(NMIN.GT.NMAX)6,2
    6 PRINT 7
    7 FORMAT(1H ,»CANNOT GET COEF SMALL ENOUGH»)
      GO TO 31
    8 P = PI*ETA
      SIGMA = SIGMAI*ETA
      PRINT 9, RS,RD,D,THETA,P,SIGMA,NMAX
    9 FORMAT(1H ,4F9.3,2E14.4,I9/)
      GO TO 31
      END
```

If THETA is not zero the situation illustrated in Fig. 2 pertains. In order to conserve computer time the simulated radiations are limited to a cone of solid angle 4πETA which encompasses a detector of radius R_D assumed to be located at a distance D_1 along the perpendicular axis through the center of the source. $D_1 = D - R_S SIN\theta$, the shortest distance between the source and detector.

In each iteration a point is randomly chosen on the source disc (statements 20-23) and the perpendicular distance (D_2) from the point to the detector is calculated (statement 23 + 1). The detector is then assumed to be shifted to a position where it is parallel to the source and at a distance D_2 along the normal through the center of the radiation source disc (see Fig. 2). A random direction is chosen and the procedure is exactly as the case when THETA = 0 but the detector-to-source separation is now D_2 instead of D.

If THETA is so large that part of the detector is hidden from the source the calculation is properly ammended by branching at statement 32 and also "DETECTOR PARTIALLY HIDDEN" is printed out. The radial distance (see Fig. 2) that remains unhidden is given by XHID = $-D\cot\theta$ and there is a branching later in the program to statement 36. This forces an exclusion from the record of simulated hits on the detector that occur behind the plane of the source. The output values of RS, RD, D, THETA, P, SIGMA and NMAX are printed on one line.

Fig. 3 shows some calculated values of geometry for circular radiation sources and detectors with unit separation and THETA = 0. Computed values of the fractional solid angle (P) are plotted as a function of THETA for one set of the parameters R_S, R_D and D, in Fig. 4.

Monte Carlo calculations are notoriously difficult to verify but insertion into the program of specific values of direction cosines in place of the randomly selected values gave the correct hit or miss prediction. Where comparison with Konijn and Tollander's tabulated data (for THETA = 0) were possible, agreement was obtained. A good check to determine whether or not the program has compiled properly was to put input data for a point source, with THETA = 0 and to check that the output gave the correct values given in equation 2 and in Fig. 3 (where R_S = 0.01 is a good approximation to zero on the logarithmic scale). Also it was deemed advisable to ask (in the control cards) for the dump, so that in the event the calculation was not finished, an incomplete but useful output was obtained.

APPENDIX I

FORTRAN LISTING FOR A RANDOM NUMBER GENERATING SUBPROGRAM

```
FUNCTION FLTRNF(X)
TYPE INTEGER RANDOM,GENERA
COMMON/RANDOM/RANDOM,GENERA
EQUIVALENCE(RANDOM,RANDM)
DATA(RANDOM=30517578125),(GENERA=3051758125)
RANDOM=RANDOM * GENERA
RANDOM=RANDOM.AND.0000777777777777B
RANDOM=RANDOM.OR.2000000000000000B
FLTRNF=RANDM +0.
END
```

REFERENCES

1. Eg. E. Berne, Rev. Sci. Instr., 22, 509 (1951).
2. H. Tallquist, Soc. Scient. Fenn. Comm. Phys. - Math., 24, 99 (1931).
3. A. I. Mahan and W. F. Malmborg, J. Opt. Soc. Am., 44, 644 (1954).
4. A. H. Jaffey, Rev. Sci. Inst., 25, 349 (1954).
5. K. A. Petrzhak and M. A. Bak, J. Tech. Phys. (USSR) 25, 636 (1955).
6. M. M. Agrest, J. Tech. Phys. (USSR) 3, 1244 (1958).
7. V. I. Lozgachev, J. Tech. Phys. (USSR) 5, 1039 (1961).
8. J. H. Hubbell, R. L. Bach and R. J. Herbold, J. of Res. N.B.S. 65C, 249 (1961).
9. L. F. Epstein and J. H. Hubbell, J. of Res. N.B.S. 67B, 1 (1963).
10. D. A. Berkowitz and E. Tammaru, J. Opt. Soc. Am. 53, 1292 (1963).
11. I. R. Williams, Nucl. Instr. & Meth., 44, 160 (1966).
12. N. Blachman, Priv. comm. to B. P. Burtt, Nucleonics, 5, 43, Aug. (1949).
13. J. Konijn and B. Tollander, Aktiebolaget Atomenerg, Stockholm, Report AE-101.
14. J. H. Smith and M. L. Storm, J. Appl. Phys., 25, 519 (1954).
15. H. Kahn, "Application of Monte Carlo," AECU 3259 (1954).
16. A.V.H. Masket, R. L. Macklin and H. W. Schmitt, "Tables of Solid Angles and Activations," ORNL-2170 (1956).
17. P. G. Guest, Rev. Sci. Instr., 32, 164 (1961).
18. A modified code with an example of this feature included has been written by the authors.

ORNL-DWG. 66-4700

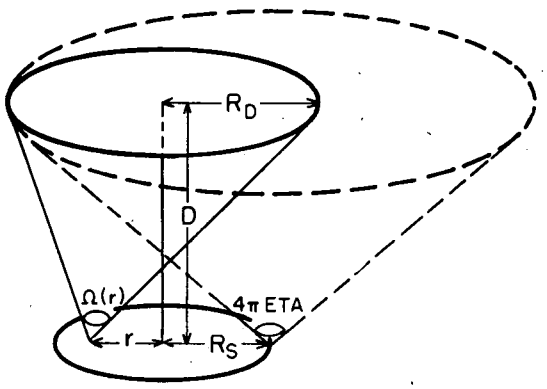

Fig. 1. Detector placed axially above the source.

ORNL-DWG. 67-1192

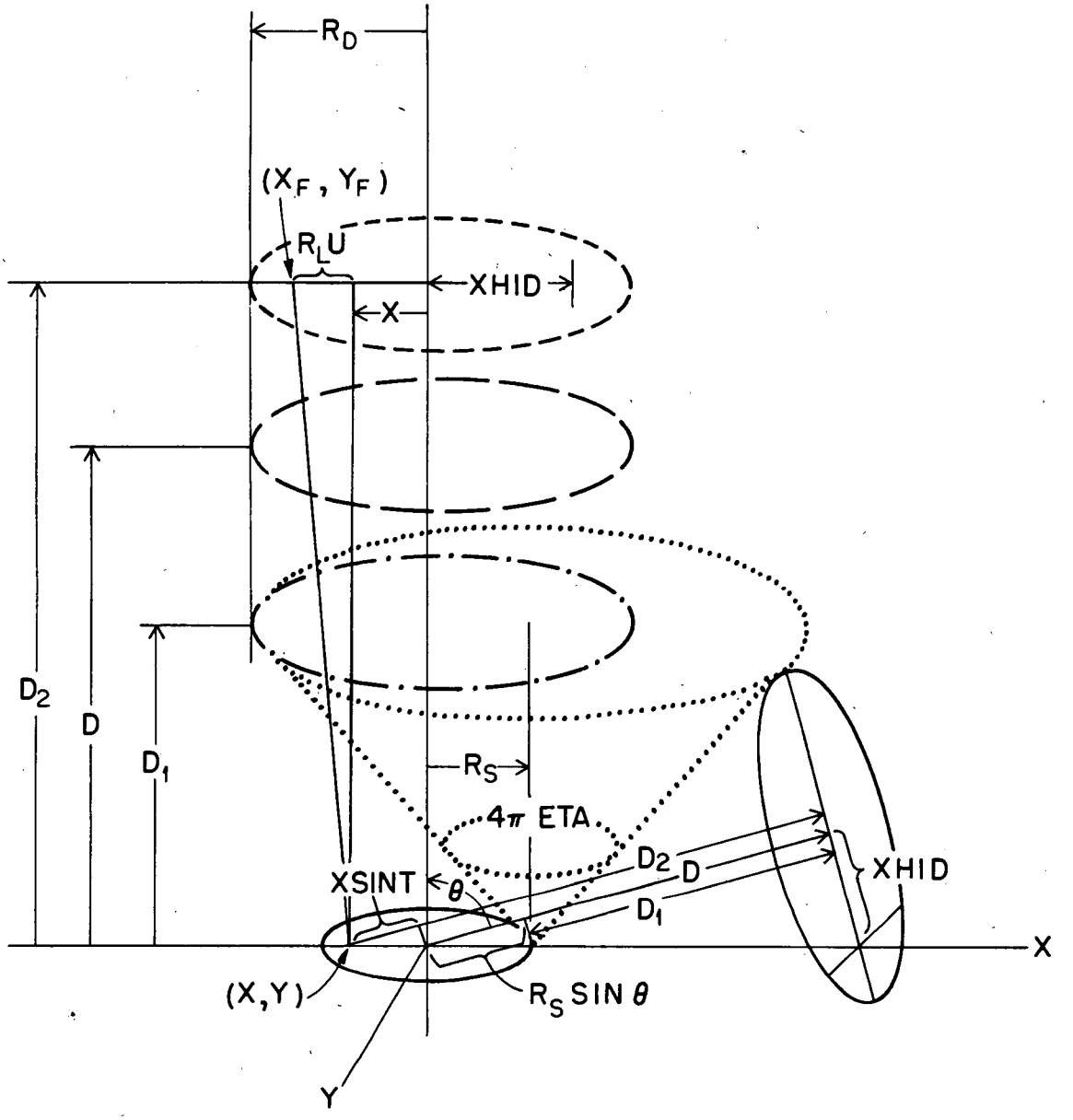

Fig. 2. Detector off axis at angle θ from the source.

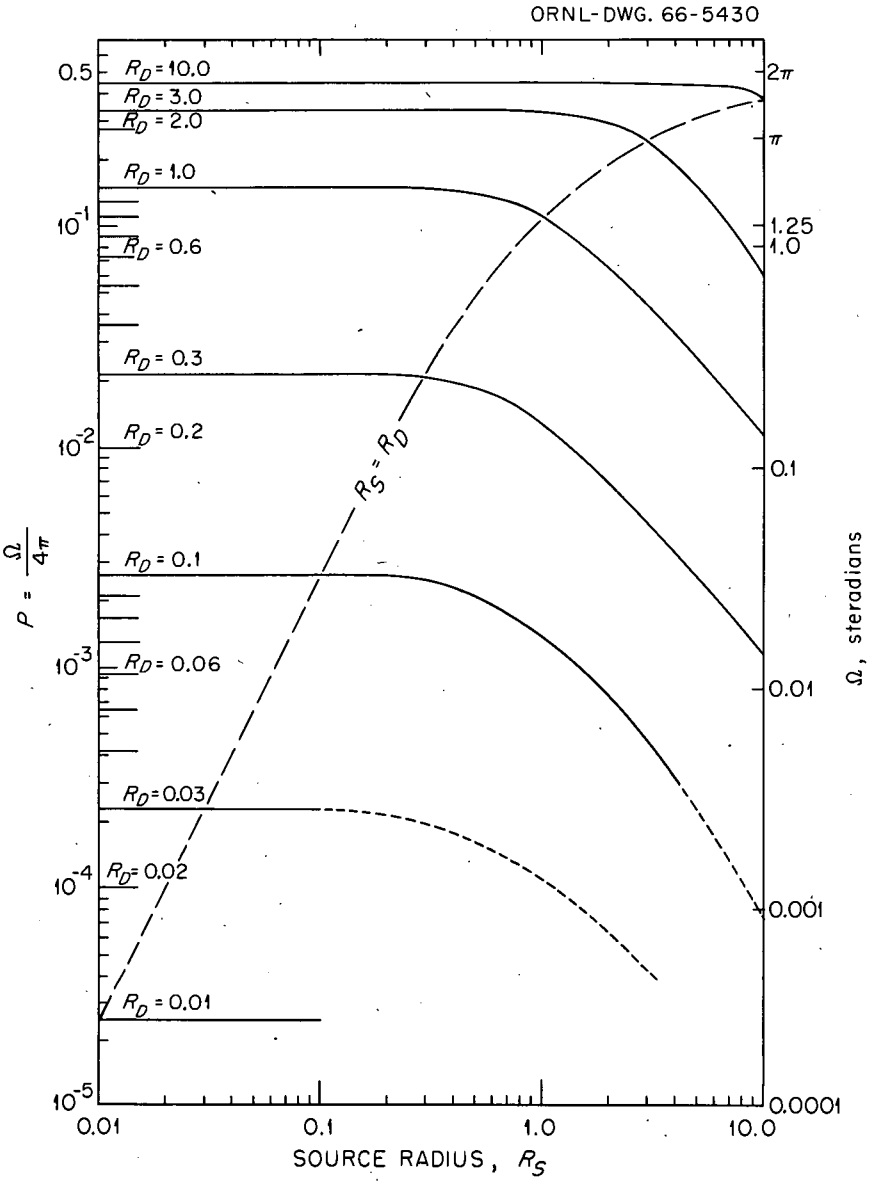

Fig. 3. Specimen values of the geometry $P(= \Omega/4\pi)$ or the solid angle Ω (in steradians), as a function of source radius (R_s) and detector radius (R_D) normalized to unit separation ($D = 1$).

ORNL-DWG. 66-12249

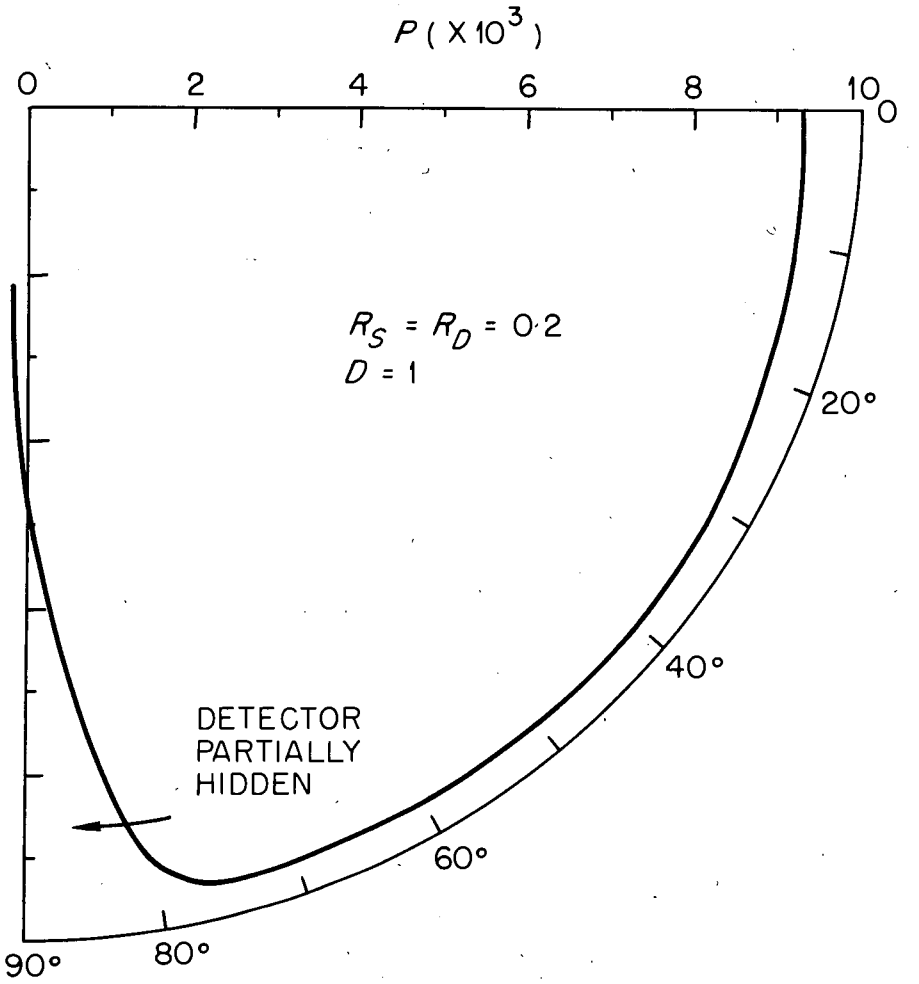

Fig. 4. Variation of P with THETA for $R_S = R_D = 0.2$ and $D = 1.0$.

ORNL-4099
UC-32 — Mathematics and Computers

INTERNAL DISTRIBUTION

1. Biology Library
2-4. Central Research Library
5-6. ORNL — Y-12 Technical Library Document Reference Section
7-26. Laboratory Records Department
27. Laboratory Records, ORNL R.C.
28. C. E. Bemis
29. A. R. Brosi
30. H. P. Carter
31. A. M. Craig, Jr.
32. W. Davis, Jr.
33. R. L. Ferguson
34. M. L. Halbert
35. J. Halperin
36. S. H. Hanauer
37. A. S. Householder
38. C. E. Larson
39. M. H. Lietzke
40. H. G. MacPherson
41. J. B. Ruch
42. M. J. Skinner
43. E. A. Straker
44. J. R. Tallackson
45. E. H. Taylor
46. C. L. Thompson
47. A. M. Weinberg
48. R. P. Wichner
49. I. R. Williams
50. P. D. Bartlett (consultant)
51. C. A. Hutchison (consultant)
52. G. Friedlander (consultant)
53. J. J. Katz (consultant)
54. J. E. Meyer (consultant)
55. G. Scatchard (consultant)
56. H. M. Sisler (consultant)

EXTERNAL DISTRIBUTION

57. J. H. Barrett, Mathematics Department, University of Tennessee
58. J. A. Swartout, 270 Park Avenue, New York 17, New York
59. Research and Development Division, AEC, ORO
60-345. Given distribution as shown in TID-4500 under Mathematics and Computers category (25 copies — CFSTI)