OAK RIDGE NATIONAL LABORATORY LIBRARIES
3 4456 0549643 3

CENTRAL RESEARCH LIBRARY
DOCUMENT COLLECTION

OAK RIDGE NATIONAL LABORATORY
operated by
UNION CARBIDE CORPORATION
for the
U.S. ATOMIC ENERGY COMMISSION

CENTRAL RESEARCH LIBRARY
DOCUMENT COLLECTION
LIBRARY LOAN COPY
DO NOT TRANSFER TO ANOTHER PERSON
If you wish someone else to see this document, send in name with document and the library will arrange a loan.

ORNL - TM - 1638
PART 3
COPY NO. - 66
DATE - August 22, 1967

NUCLEAR INSTRUMENT MODULE MAINTENANCE MANUAL

PART 3

FLUX RESET MECHANISM, ORNL MODEL Q-2603

J. L. Anderson

ABSTRACT

A Flux Reset Mechanism module, ORNL model Q-2603, was designed for use with a Flux Amplifier, ORNL model Q-2602, and an Operational Amplifier, ORNL model Q-2605. These three modules together comprise a high-gain instrument servo system which positions a potentiometer to adjust the gain of the flux amplifier. The input signal to the servo is the difference between the flux amplifier output and a computed signal that is proportional to reactor heat power. The servo causes the steady-state flux amplifier output to agree with the slow, but accurate heat-power signal with an adjustment speed which will not significantly alter the response of the flux amplifier to fast transients, and yet the agreement will be reached in a reasonable time for normal reactor maneuvering.

The flux reset mechanism is packaged in a standard "two unit" plug-in module of the ORNL modular reactor instrumentation series.

This report describes the circuit, applications, maintenance procedures and acceptance tests for the Flux Reset Mechanism.

NOTICE This document contains information of a preliminary nature and was prepared primarily for internal use at the Oak Ridge National Laboratory. It is subject to revision or correction and therefore does not represent a final report.

LEGAL NOTICE

This report was prepared as an account of Government sponsored work. Neither the United States, nor the Commission, nor any person acting on behalf of the Commission:

A. Makes any warranty or representation, expressed or implied, with respect to the accuracy, completeness, or usefulness of the information contained in this report, or that the use of any information, apparatus, method, or process disclosed in this report may not infringe privately owned rights; or

B. Assumes any liabilities with respect to the use of, or for damages resulting from the use of any information, apparatus, method, or process disclosed in this report.

As used in the above, "person acting on behalf of the Commission" includes any employee or contractor of the Commission, or employee of such contractor, to the extent that such employee or contractor of the Commission, or employee of such contractor prepares, disseminates, or provides access to, any information pursuant to his employment or contract with the Commission, or his employment with such contractor.

CONTENTS

		Page
1.	DESCRIPTION	4
1.1	General	4
1.2	Construction	4
1.3	Application	4
1.4	Specifications	5
1.5	Applicable Drawings and Specifications	6
2.	THEORY OF OPERATION	6
2.1	General	6
3.	OPERATING INSTRUCTIONS	8
3.1	Installation	8
3.2	Operating Controls	8
3.3	Connections	9
3.4	Precautions	9
4.	MAINTENANCE INSTRUCTIONS	9
4.1	General	9
4.2	Periodic Maintenance	9
4.3	Calibration	10
5.	REPLACEABLE PARTS LIST	10
6.	ACCEPTANCE TEST PROCEDURES	12
6.1	Test Equipment	12
6.2	Adjustment Procedure	12
6.3	Acceptance Test	13
6.4	Limit Stop Assembly	14

OAK RIDGE NATIONAL LABORATORY LIBRARIES

3 4456 0549643 3

1. DESCRIPTION

1.1 General

The Flux Reset Mechanism is not an instrument by itself; it is an adjunct to the Flux Amplifier, ORNL model Q-2602. The mechanism, which consists of a servo-motor-driven potentiometer, limit switches, and a transistor power amplifier, is used with an Operational Amplifier, ORNL model Q-2605, to form a high-gain instrument servo system which positions the potentiometer in accordance with the input signal. The potentiometer is in the feedback circuit of the flux amplifier so as to adjust the amplifier gain. The input signal to the servo is the difference between the flux amplifier output and a separate computed signal which is proportional to reactor heat power generation. In this manner the steady-state flux amplifier output is made to agree with the slow, but accurate heat power signal. The maximum speed of gain adjustment is tailored so that the resetting action will not alter the response of the flux amplifier to fast transients, and yet it will allow the flux amplifier output and heat power signal to come to agreement in reasonable time for normal reactor maneuvering.

1.2 Construction

The flux reset mechanism is contained in a module 2.83 in. wide, 4.72 in. high, and 11.90 in. deep. It is a standard "two unit" plug-in module of the Modular Reactor Instrumentation series depicted on ORNL drawings Q-2600-1 through Q-2600-5. The power amplifier is on a printed circuit board mounted behind the mechanical components. A front-panel meter displays potentiometer position calibrated in terms of flux amplifier gain.

1.3 Application

The mechanism was designed for use with a flux amplifier, ORNL model Q-2602, and an operational amplifier, ORNL model Q-2605, to continuously adjust the gain of the flux amplifier such that the output voltage of the flux amplifier will agree with a signal voltage proportional to reactor heat power. The response of the flux amplifier to fast transient changes in input current is unaltered while the output of the flux amplifier is continuously and slowly adjusted to agree with the slower, more accurate heat power signal. The principal application of this device is in reactors which for a variety of reasons do not have a constant proportionality between neutron flux at the ion chambers and generated heat power.

1.4 Specifications

1.	Gain change range:	The maximum range of gain change shall be continuously adjustable from 1:1 to 3:1.
2.	Speed:	The maximum speed of reset or gain change in terms of percent reactor power shall be not less than 0.1 %/sec and not more than 1.0 %/sec.
3.	Time constant:	To minimize jitter due to noise input signals, the servo should have a first-order integrating time constant of approximately 5 sec.
4.	Dead band:	To minimize jitter or hunting in response to noisy input signals, the servo should have a finite dead-band of approximately ±0.5% reactor power.
5.	Accuracy:	At equilibrium the controlled signal (neutron flux) shall agree with the reference signal (heat power) within ±1%.
6.	Indication:	The equivalent gain shall be displayed on a meter on the front panel of the module. Amber limit lights shall indicate when the servo is in either the maximum or the minimum gain position.
7.	Remote function:	A signal (pot position) equivalent to the gain shall be available for adjusting the gain of a second external circuit used for on-line instrument testing.
8.	Power required:	+32 v and -32 v dc, unregulated; +25 v and -25 v dc, regulated.
9.	Ambient temperature range:	10°C to 55°C.

1.5 Applicable Drawings and Specifications

The following list gives the drawing numbers (ORNL Instrumentation and Controls Division drawings numbers) and subtitles and fabrication specification number for the flux reset mechanism:

1.	Q-2603-1	Circuit.
2.	Q-2603-2	Details.
3.	Q-2603-3	Metalphoto Panel.
4.	Q-2603-4	Printed Circuit Board.
5.	Q-2603-5	Assembly.
6.	Q-2603-6	Parts List.
7.	Q-2603-7	Meter Face.
8.	SF-240	Fabrication Specification.

The following list gives the drawing numbers and subtitles for the plug-in chassis system:

1.	Q-2600-1	Assembly.
2.	Q-2600-2	Details.
3.	Q-2600-3	Details.
4.	Q-2600-4	Details.
5.	Q-2600-5	Details.
6.	Q-2600-6	Details.

2. THEORY OF OPERATION

2.1 General

In many reactors the neutron flux at ion chamber locations is not a constant proportion of reactor power because of control-rod shading, flux perturbance due to experimental facilities, shifts in core flux distribution due to burnup or xenon, or many other reasons. The seriousness of the lack of accuracy of the flux signal is related to the magnitude of error. Small inaccuracies can be ignored. Slow, predictable changes might be accommodated by manual manipulation of either chamber position or amplifier gain. Larger, faster, or less predictable changes of proportionality must be corrected by continuous comparison with a more accurate measure of reactor power.

For most reactors, accurate neutron flux signals are essential for control and safety because of their high speed of response. Heat power signals computed from measurements of coolant flow and differential temperature are usually much more accurate than neutron flux signals, but are unsatisfactory for reactor control because of their slow response.

The flux reset mechanism is a small servo which adjusts the gain of an associated neutron flux signal amplifier continuously to agree with a signal proportional to reactor heat power. By this technique, the flux amplifier achieves the steady-state accuracy of the heat power computation, yet retains its high speed of response for fast transients.

The flux reset mechanism is not a self-contained instrument; it requires the use of an operational amplifier, ORNL model Q-2605, to provide signal comparison and gain. The mechanism, in turn, adjusts the gain of a flux amplifier, ORNL model Q-2602. A functional diagram is shown in Fig. 1. The heat power signal and flux amplifier output are compared in resistors R1 and R2. The difference is amplified by the external operational amplifier and the power stage consisting of transistors Q1 and Q2. The output of the power stage drives the dc servomotor which in turn positions the multigang precision potentiometer R6. Section R6A adjusts the feedback factor and thus the gain of the flux amplifier until the flux amplifier output agrees with the heat power signal. When the signals are within less than ±1% of each other, the amplified difference is insufficient to drive the motor and the system is in equilibrium.

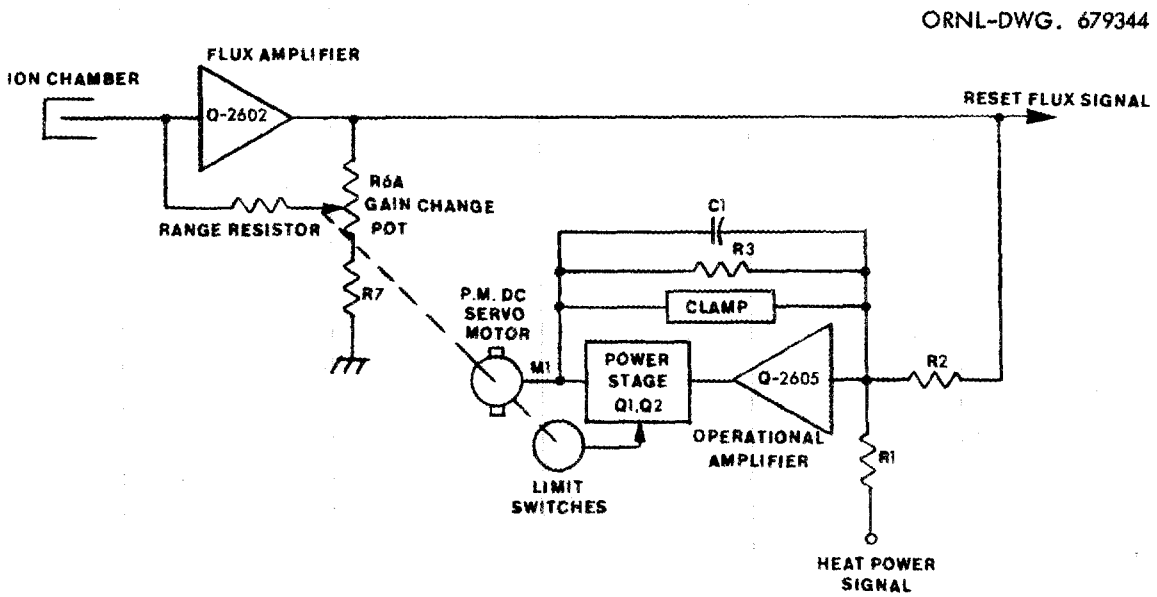

Fig. 1. Functional Diagram of Flux Reset Mechanism.

The feedback components R3 and C1 control the gain of the operational amplifier and provide a smoothing, or integrating, time constant of about 5 sec to prevent the motor from "jittering" in response to noise on the input signals. A feedback clamping circuit keeps the operational amplifier out of saturation when the input signals are greatly different. A rotary limit switch assembly geared to the motor and potentiometer protects the pot from overtravel and provides a means of adjusting the stroke of the pot, and thus the maximum gain change available.

A second deck (R6B) of the motor-driven pot is used externally to adjust the gain of a circuit, ORNL model Q-2630, which provides test signals for checking the response of the flux amplifier. A third deck (R6C) of the pot supplies a signal to the panel meter which is calibrated in terms of relative gain from 1 to 3.

The speed of the motor is proportional to the magnitude of the difference between the flux and heat-power signals for relatively small differences. For large differences the output of the power stage is clamped at 12 v, limiting the maximum speed of the motor to about 1.85 rpm which corresponds to a gain change rate of 0.1 to 0.8% power per second depending on the absolute position of the pot. The rate changes with pot position, because the feedback factor is adjusted rather than the gain directly. Gain is proportional to the reciprocal of feedback factor, and consequently for constant motor speed, the percentage change in gain is large when the feedback factor is small. This arrangement is used, even though the rate of gain change is not constant, to allow complete freedom of selection of the feedback resistor of the flux amplifier for range changing and adjustment.

3. OPERATING INSTRUCTIONS

3.1 Installation

The flux reset mechanism is a module in the ORNL Modular Reactor Instrumentation series. Like other modules of the series, it has standard connectors and dimensions and has a pin-and-hole-code on the rear plate so that the module will not be inserted in a wrong location in a drawer. The module is installed by placing it in its proper location, inserting the module firmly, and tightening the thumb screw. The module may be plugged in with power on without damage under most circumstances (see Sect. 3.4).

3.2 Operating Controls

There are no operating controls on the module. Adjustment of the gain change range and limit switches is described in Sect. 6.2.

3.3 Connections

All connections to the flux reset mechanism are made through the rear connectors P8A and P8B when the module is inserted. Except for adjustment of the gain change range, there are no adjustments or connections to be made within the module. The neutron flux and heat power input signals should be in the range 0 to 10 v. The signal sources should be low impedance (10 ohms or less), with the flux signal being negative and the heat power signal positive to achieve the proper directions of rotation. The flux signal should be applied directly to pin 5 of connector P8A, but the heat power signal requires a 1-kilohm, 1% resistor between the signal source and pin 4 of P8A.

If it is desired to have the circuit drive to maximum gain in the absence of both input signals, a bias of approximately 0.4 v should be applied through a type 1N270 germanium diode to pin 4. When the signals reach significant amplitude, the diode will become reverse biased and cause no error.

3.4 Precautions

Removal or insertion of the flux reset mechanism opens or closes the feedback loop of the flux amplifier and might cause undesirable action as a result of the sudden large changes in output.

4. MAINTENANCE INSTRUCTIONS

4.1 General

This module is designed to operate continuously with a minimum of maintenance and adjustment. No periodic adjustments are required. Should a failure occur, any part listed in the Replaceable Parts List, Sect. 5, can be replaced. Limit-switch adjustment and calibration should be checked if the gears are removed or slipped with respect to each other. The slip clutch on the motor is normally adjusted for minimum tension, and need not be reset unless trouble occurs.

4.2 Periodic Maintenance

No specific periodic maintenance is required.

4.3 Calibration

Calibration instructions are combined with the Acceptance Test Procedure, Sect. 6.

5. REPLACEABLE PARTS LIST

A description and ORNL stores number for all replaceable parts are given in Table 1.

Table 1. Replaceable Parts List

Part No.	ORNL Stores No.	Description
		Direct-current motor with planetary gear reducer, Globe Industries, Inc., type SS-43A154-14, 12 v, 11,500 rpm, no load, integral gear reducer, 6391 to 1 reducer, ball-bearing output shaft, 1-3/8 in. diam by 3-1/8 in. long.
		Miniature adjustable limit switch and stop, 0 to 25 revoluations, Precision Mechanisms Corp., model LS-302.
R6		Potentiometer, 10 turn, ±3% resistance tolerance, ±0.25% linearity tolerance, 3-section, ganged, servo mount with ball bearings, front two sections 5000 ohms, back section 1000 ohms, Bourns, model 3550S-502/502/102.
		Miniature slip-clutch assembly, PIC Design Corp., catalog No. R3-11.
M1		Meter, 0-100 μa dc, 2000-ohm coil, accuraty ±2% full scale, Simpson, model 1212C, catalog No. 4295 with scale marked as shown on Company drawing Q-2603-7.

Part No.	ORNL Stores No.	Description
C1	06-812-1450	Capacitor, 10 μf, ±5%, 50 v dcw, Mylar, Midwec, type 7XFR.
R1	06-932-0097	Resistor, 1000 ohms, ±1%, 1/2 w, carbon film.
R2	06-932-0113	Resistor, 2000 ohms, ±1%, 1/2 w, carbon film.
R4, 5	06-936-1930	Resistor, 10 ohms, ±5%, 10 w, ww, Ohmite, RW29G-100.
R12, 13		Resistor, 2000 ohms, ±5%, 1 w, A-B.
R10, 11		Resistor, 330 ohms, ±5%, 1 w, A-B.
R16, 7		Resistor, 2400 ohms, ±5%, 1 w, A-B.
R14, 15		Resistor, 18 kilohms, ±5%, 1/2 w, A-B.
R8		Resistor, 250 kilohms, ±5%, 1/2 w, A-B.
R3		Resistor, 510 kilohms, ±5%, 1/2 w, A-B.
D1	06-995-7064	Diode, Zener, 12.1 v, ±5%, Motorola type 1N2976B.
D2		Diode, Zener, 12.1 v, ±5%, Motorola type 1N2976RB.
D3, 4	06-995-7152	Rectifier, diode, Motorola type 1N4004.
D5, 6	06-995-7910	Diode, Zener, 12 v, ±5%, 250 mw, Hughes type HZ-8380.
D7, 8	06-995-5860	Diode, EIA, type 1N459A.
Q1		Transistor, power, silicon, NPN, RCA, type 1483.

Part No.	ORNL Stores No.	Description
Q2	06-996-1990	Transistor, PNP, Geranium, Honeywell, type 2N1501.
I1, 2	06-916-2566	Lamp, 28 v, 0.04 amp, G.E. type 387.

6. ACCEPTANCE TEST PROCEDURES

6.1 Test Equipment

The following test equipment is required:

1. Power supplies, ±25 v, ±0.1% regulated; ±15 v, ±0.1% regulated; and ±32 v, unregulated.

2. AC power supply, 6.3 v rms, 60 cps, sine or square wave.

3. Oscilloscope, Tektronix 531, or equal.

4. Volt box, type 2, ±5 v dc.

6.2 Adjustment Procedure

1. With no power applied, adjust the mechanical zero of the panel meter M1.

2. Apply +25.0 v from pin 6 to pin 15. Unmesh the gears by loosening the set screws and count the number of potentiometer revolutions required to give the desired gain change ratio. The proper gain change ratio will be dictated by reactor operating experience. If the maximum available gain change is desired, use 9-3/4 turns of the pot.

3. Adjust the span between limits of the rotary limit switch LS-302 for the desired number of turns. Refer to the limit stop assembly adjustment procedure (Sect. 6.4).

4. After the desired span has been adjusted and the lock nut tightened, rotate the shaft of the limit switch to the maximum counterclockwise position. Rotate the potentiometer shaft fully clockwise, then counterclockwise 1/8 turn. Mesh the gears and tighten the set screws without disturbing the shaft positions. The rotary position of the motor is unimportant, but all three gears should now be properly meshed.

5. Adjust the slip clutch on the motor shaft for minimum tension (easiest slip) and tighten the lock nut. This will be its permanent setting.

6. Rotate the gears by hand, overrunning the slip clutch, from one stop to the other while observing the panel meter to check for desired gain change.

6.3 Acceptance Test

1. Complete the adjustment procedure according to Sect. 6.2.

2. Connect[1] an ORNL model Q-2605-1 operational amplifier output to pin 11, input to pin 1, and all grounds to pin 15. Install a jumper from pin 12 to pin 14. Connect +25 v to pin 6 and -25 v to pin 8, and the commons of each supply to pin 15. Connect the shield of pin 7 to pin 15. Connect +32 v to pin 9 and -32 v to pin 10, and the commons to pin 15.

3. Connect a +1.0 v signal from pin 4 to pin 15. The motor should be running at maximum speed. Measure the motor shaft speed. The speed should be within 1.6 and 2.0 rpm. The gain meter M1 should indicate increasing gain.

4. With the +1.0 v signal still connected to pin 4, connect a -2.0 v signal from pin 5 to pin 15. The motor should now be stopped. Vary the voltage on pin 4 above and below +1.0 v to the points where the motor just begins to rotate. Measure the difference voltage at pin 4 between breakaway in one direction and breakaway in the other direction. This difference should be less than 0.2 v.

5. Remove the jumper between pins 12 and 14, and measure the starting current of the dc motor by inserting a 0 to 200 milliammeter between pins 12 and 14. Vary the voltage on pin 4 slowly (as in step 4), and measure the current just before rotation begins. This current should be between 100 and 200 ma.

6. Measure the motor terminal voltage while varying the voltage on pin 4 from 0.5 to 1.5 v. The motor voltage should swing over the range from a minimum of +11 to -11 v and a maximum of +13 to -13 v.

7. Connect an oscilloscope to the motor terminals, and again vary the voltage on pin 4 so as to vary the motor speed over its full range in both directions. Observe the oscilloscope for any instability of the reset mechanism such as high-frequency oscillations. Instability is most likely to be observed when the motor is either stopped or turning very slowly.

---

[1] The connection of power supplies to the operational amplifier is illustrated in ORNL Instrumentation and Controls Division drawing Q-2605-1.

8. To measure the gain accuracy as indicated by the front-panel meter, connect an accurate ohmmeter between the center conductor and shield of pin 7. Rotate the motor until the "Reset Gain" meter M1 indicates a gain of 2. The resistance indicated by the ohmmeter should be 3750 ± 375 ohms. Rotate the motor until the gain meter indicates 1.5. The resistance should be 5000 ± 500 ohms. Rotate the motor until the gain meter indicates 1.2. The resistance should be 6200 ± 600 ohms.

9. Rotate the motor by varying the voltage on pin 4 so as to check for proper operation and setting of the maximum and minimum limits and the indicating lights as set by the adjustment procedure described in Sect. 6.2. Ensure that the motor will drive out of each limit when the signal is reversed.

6.4 Limit Stop Assembly

6.3.1 Adjustment Procedure for Precise Angle Between Limit Stops

1. Clockwise and counterclockwise directions referred to herein are viewed from the end cap as in Fig. 2, A-A.

ORNL-DWG. 679345

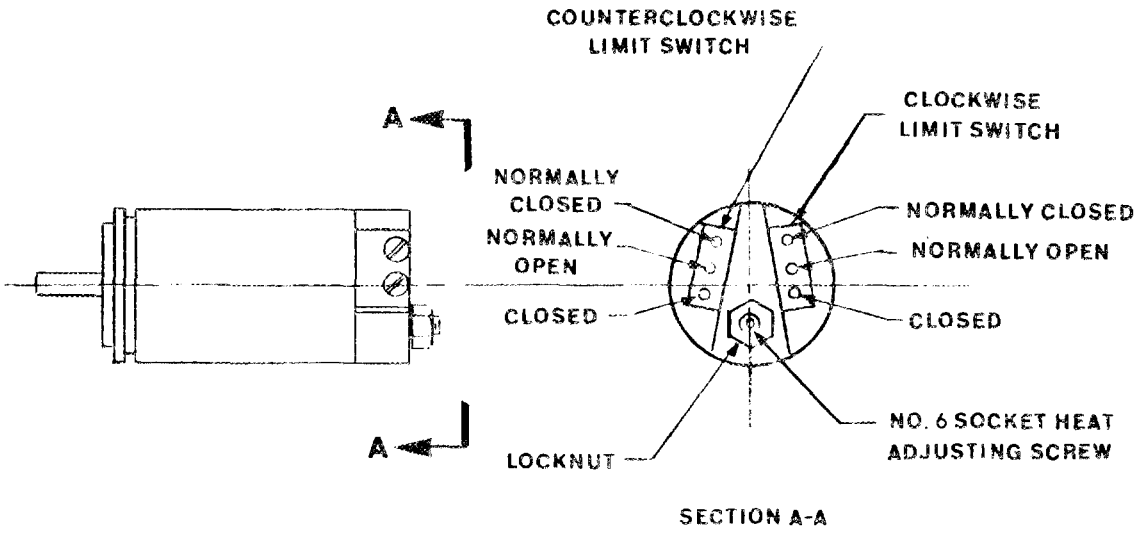

Fig. 2. Limit Stop Assembly.

2. Range adjustment affects the clockwise shaft limit only.

3. a. Loosen the lock nut at the end of the unit just enough to allow rotation of the adjusting screw.

b. Using a 1/16 in. hex wrench, rotate the adjusting screw clockwise as far as it will go. The unit is now set for zero shaft rotation.

c. Turn the adjusting screw counterclockwise through an angle equal to the required range, i.e., one revolution for 360°, two revolutions for 720°, etc.

d. Tighten the lock nut in place.

6.3.2 Adjustment Procedure for Precise Angle Between Switching

1. Use the same procedure described in Sect. 6.3.1 except that the counterclockwise angle to be set in by the hex wrench (as in paragraph 3.c) must be the required switching angle plus the overtravel built into the unit. This is approximated by setting the switching angle plus 45°.

2. If it is necessary to trim to a fine adjustment when the limit switch is clamped in place on the gear box, the rule is that range is increased by counterclockwise rotation and decreased by clockwise rotation.

INTERNAL DISTRIBUTION

1-20. J. L. Anderson
21. D. S. Asquith
22. A. E. G. Bates
23. C. J. Borkowski
24-33. W. D. Brown
34-35. C. T. Carney
36-38. O. C. Cole
39. C. C. Courtney
40. R. A. Dandl
41. J. T. De Lorenzo
42. E. P. Epler
43. C. S. Harrill
44. C. F. Holloway
45. G. A. Holt
46. W. H. Jordan
47. W. E. Lingar
48. C. E. Mathews
49. T. L. McLean
50. R. V. McCord
51. L. C. Oakes
52. G. R. Owens
53. R. W. Peelle
54-56. W. Ragan
57. J. L. Redford
58. P. Rubel
59. J. B. Ruble
60. G. S. Sadowski
61-62. R. W. Tucker
63. D. D. Walker
64. K. W. West
65. H. N. Wilson
66-67. Central Research Library
68. Document Reference Section
69-73. Laboratory Records Department
74. Laboratory Records, ORNL R.C.
75. ORNL Patent Office
76-90. Division of Technical Information Extension
91. Research and Development Division, ORO

EXTERNAL DISTRIBUTION

92. E. H. Cooke-Yarborough, Electronics Division, AERE, Harwell, England
93. J. B. H. Kuper, Brookhaven National Laboratory
94. E. Siddall, AECL, Chalk River, Ontario