MARTIN MARIETTA ENERGY SYSTEMS LIBRARIES
3 4456 0310946 4

ORNL-4181
UC-32 – Mathematics and Computers

Cy 5

MODIFICATIONS OF THE POINT-KERNEL CODE QAD-P5A: CONVERSION TO THE IBM-360 COMPUTER AND INCORPORATION OF ADDITIONAL GEOMETRY ROUTINES

E. Solomito
J. Stockton

OAK RIDGE NATIONAL LABORATORY
CENTRAL RESEARCH LIBRARY
CIRCULATION SECTION
4500N ROOM 175
LIBRARY LOAN COPY
DO NOT TRANSFER TO ANOTHER PERSON.
if you wish someone else to see this report, send in name with report and the library will arrange a loan.
ORNL-118 (6-97)

OAK RIDGE NATIONAL LABORATORY
operated by
UNION CARBIDE CORPORATION
for the
U.S. ATOMIC ENERGY COMMISSION

Printed in the United States of America. Available from Clearinghouse for Federal Scientific and Technical Information, National Bureau of Standards, U.S. Department of Commerce, Springfield, Virginia 22151
Price: Printed Copy $3.00; Microfiche $0.65

LEGAL NOTICE

This report was prepared as an account of Government sponsored work. Neither the United States, nor the Commission, nor any person acting on behalf of the Commission:

A. Makes any warranty or representation, expressed or implied, with respect to the accuracy, completeness, or usefulness of the information contained in this report, or that the use of any information, apparatus, method, or process disclosed in this report may not infringe privately owned rights; or

B. Assumes any liabilities with respect to the use of, or for damages resulting from the use of any information, apparatus, method, or process disclosed in this report.

As used in the above, "person acting on behalf of the Commission" includes any employee or contractor of the Commission, or employee of such contractor, to the extent that such employee or contractor of the Commission, or employee of such contractor prepares, disseminates, or provides access to, any information pursuant to his employment or contract with the Commission, or his employment with such contractor.

ORNL-4181

Contract No. W-7405-eng-26

Neutron Physics Division

MODIFICATIONS OF THE POINT-KERNEL CODE QAD-P5A: CONVERSION TO THE IBM-360 COMPUTER AND INCORPORATION OF ADDITIONAL GEOMETRY ROUTINES

E. Solomito and J. Stockton*

*Mathematics Division.

JULY 1968

OAK RIDGE NATIONAL LABORATORY
Oak Ridge, Tennessee
operated by
UNION CARBIDE CORPORATION
for the
U.S. ATOMIC ENERGY COMMISSION

MARTIN MARIETTA ENERGY SYSTEMS LIBRARIES

3 4456 0310946 4

TABLE OF CONTENTS

		Page No.
	ABSTRACT	4
I.	INTRODUCTION	4
II.	THE QAD-P5A (360) CODE	6
	Calculational Techniques	6
	Gamma-Ray Calculations	6
	Neutron Calculations	8
	Input to QAD-P5A (360)	13
III.	THE QAD-GEOM (360) CODE	23
	Input to QAD-GEOM (360) -- Generalized Geometry	26
	Use of GEOM Subroutine	30
	GEOM Error Messages	33
	Input to QAD-GEOM (360) -- Cylindrical Geometry	34
	Input to QAD-GEOM (360) -- Spherical Geometry	35
IV.	INPUT FOR ADDITION OF LiH KERNEL TO QAD-P5A AND QAD-GEOM	36
	ACKNOWLEDGMENT	37
App. A.	SAMPLE PROBLEMS	40
App. B.	QAD DATA SHEETS	88
App. C.	LISTING OF QAD-P5A (360)	93
App. D.	LISTING OF QAD-GEOM (360)	150
App. E.	LISTING OF QAD-P5A (360) WITH LITHIUM HYDRIDE KERNEL	214
App. F.	LISTING OF QAD-GEOM (360) - CYLINDRICAL	219
App. G.	LISTING OF QAD-GEOM (360) - SPHERICAL	236

MODIFICATIONS OF THE POINT-KERNEL CODE QAD-P5A: CONVERSION TO THE IBM-360 COMPUTER AND INCORPORATION OF ADDITIONAL GEOMETRY ROUTINES

E. Solomito and J. Stockton

ABSTRACT

The point-kernel code QAD-P5A, used for both neutron and gamma-ray shield penetration calculations, has been converted to FORTRAN IV language for use on the IBM 360/75 computer. The code has also been modified to use the generalized geometry subroutines of the 05R code, as well as special 05R subroutines for cylindrical and spherical geometries. With the increased speed of the IBM-360 computer and the ability of the generalized geometry to describe arbitrary shapes, the versatility of the code has been increased. Another modification has been the addition of a lithium hydride kernel for use in neutron calculations; the kernel was obtained from moments method calculations.

I. INTRODUCTION

The QAD codes[1] are a series of point-kernel codes developed by Los Alamos Scientific Laboratory to calculate the fast-neutron and gamma-ray penetration through various shield configurations. One of these codes, QAD-P5, was later modified by G. P. Lahti of the Lewis Research Center (Cleveland) to include gamma-ray and neutron data not in the original code, the modified code being identified as QAD-P5A. In the work reported here the QAD-P5A code has been modified to include LiH neutron kernel and/or 05R geometry subroutines.[2] When the version with the geometry subroutines is used, the code is identified as QAD-GEOM. Another recent modification is the conversion of QAD-P5A, as well as QAD-GEOM, to FORTRAN-IV language for the IBM-360 computer. This modification considerably reduces the time requirements for a penetration calculation.

In general, the point-kernel method utilized by the QAD codes involves representing the source volume by a number of point isotropic sources and computing the line-of-sight distance from each of these source points to the detector point. From the distance through the shielding region and the attenuating characteristics of the shielding materials, the geometric attenuation and material attenuation are determined. This technique, when

adapted to machine calculation, provides a quick and inexpensive tool for shield analysis. However, care and judgement must be employed in the application of the point-kernel method to particular problems. The accuracy of the results obtained with the method will be strongly influenced by such things as the choice of a buildup factor or the specification of the source volumes, etc. Therefore, the final answers are in many ways a function of the experience of the user. A further word of caution in the use of point methods: scattering effects can dominate in some shield configurations and cause a serious underestimate of the dose. For example, in some asymmetric shield designs for manned space applications, gamma rays that are scattered by the lithium hydride into the crew direction and around the edge of the thick shield located between the reactor and the crew can control the design.

In this report a description of the point-kernel calculational techniques used in the QAD codes for gamma-ray and neutron problems is given in Section II, together with a description of how the QAD-P5A code calculates buildup factors for the gamma-ray calculation and kernels for the neutron calculation. The remainder of the report deals with the input to QAD-P5A and QAD-GEOM, both with and without the lithium hydride kernel.

The general O5R geometry used in QAD-GEOM is capable of handling any arbitrary shapes which can be described by quadric surfaces used singly or in combination. The specialized cylindrical and spherical geometries of O5R may be used to optimize the QAD running time when such geometries are sufficient to describe the physical situation.

Several sample problems, including both input and output, are presented in an appendix to illustrate the use of the various geometry descriptions. Several other appendixes present FORTRAN IV listings of QAD-P5A (360) and QAD-GEOM (360) and sample input data sheets.

A more detailed report on the calculational techniques used in the code, along with general input information, may be found in Ref. 1.

II. THE QAD-P5A (360) CODE

Calculational Techniques

Gamma-Ray Calculations. For gamma-ray calculations the QAD codes use the point-kernel ray-tracing technique. In this method, the point kernel representing the transfer of energy by the uncollided flux along a line-of-sight path is combined with an appropriate buildup factor to account for the contribution from the scattered photons. With a distributed source, the point kernel is integrated over the source volume for each source energy considered. Expressed as an equation, the gamma-ray dose rate at any point due to an isotropic source emitting S photons of energy E per second per unit volume is

$$D(\vec{r}) = K \int_V \frac{S(\vec{r}\,')\, B(\mu|\vec{r} - \vec{r}\,'|, E)\, \exp(-\mu|\vec{r} - \vec{r}\,'|)}{4\pi|\vec{r} - \vec{r}\,'|^2}\, dV \quad , \qquad (1)$$

where

$\vec{r}$ = point at which gamma dose rate is to be calculated,

$\vec{r}\,'$ = location of source in volume V,

V = volume of source region,

μ = total attenuation coefficient at energy E,

$|\vec{r} - \vec{r}\,'|$ = distance between source point and point at which gamma intensity is to be calculated,

$B(\mu|\vec{r} - \vec{r}\,'|, E)$ = dose buildup factor,

K = conversion factor (flux-to-dose rate).

The buildup factors used in the QAD-P5A code are based on the Goldstein and Wilkins[3] moments method calculations for gamma-ray transport in infinite homogeneous media. The code uses Capo's[4] fit to the Goldstein-Wilkins data with bivariant polynomial expressions to calculate the appropriate buildup factors as a function of the gamma-ray energy and the number of mean free paths from the source to the detector. For high atomic number materials, the polynomial fit has the form

$$B(\mu|\vec{r} - \vec{r}'|,E) = \sum_{j=0}^{j=4} \sum_{i=0}^{i=3} C_{ij}(\mu|\vec{r} - \vec{r}'|)^i \ (E)^j \quad , \tag{2}$$

and for low atomic number materials it has the form

$$B(\mu|\vec{r} - \vec{r}'|,E) = \sum_{j=0}^{j=4} \sum_{i=0}^{i=3} C_{ij}(\mu|\vec{r} - \vec{r}'|)^i \left[\frac{1}{E}\right]^j \quad , \tag{3}$$

where the C_{ij}'s are the coefficients of the expansion.

Using these infinite-medium buildup factors should result in an overestimate of the dose rate at a surface external to the source region since it implies that reflecting material is located beyond the surface. However, because of the strong preferential forward scattering of photons, the error will usually not be more than a few percent and only in rather unusual cases will it reach 20 or 30%.

Using single-material buildup factors for multilayered shields or for shields made up of mixtures of materials can be another source of error. For multilayered structures having an outer layer that is thicker than 2 or 3 mean free paths, the buildup factor used should be the one representing the outer layer, but the total number of mean free paths should be the number along the line-of-sight through all materials in the structure. This is a reasonable procedure since the gamma-ray spectrum would readjust to the new medium and tend to approach the spectrum that would exist if the whole structure consisted of the outer layer, particularly when a low atomic number material is followed by a high atomic number material. For homogeneous mixtures or compounds, the so-called equivalent Z (atomic number) method[5] can be used.

For multilayered structures in which each layer is less than 2 mean free paths thick, no clear-cut procedure is available. It has been shown that if one assumes that the structure is made entirely of the material having the largest buildup factor, then the dose is overestimated. Conversely, if one assumes that the material having the lowest buildup factor is representative of the structure, then the dose is underestimated.

The QAD code calculates the dose at a detector for each source energy group j with the following equation, which is a finite difference form of Eq. (1):

$$D_j = \sum_i K_j \frac{S_{ij}}{4\pi R_i^2} \exp\left[- \sum_k (\mu_j t)_k \right] B_{jk} \quad , \tag{4}$$

where

j = energy group index,

i = source point index,

k = region index,

K = flux-to-dose conversion factor (rads/unit flux),

S = volume-weighted gamma-ray point source strength (photons/sec),

R = distance from source point to detector (cm),

B = dose buildup factor,

μ = total attenuation coefficient (cm^{-1}),

t = zone penetration distance (cm).

The total dose is obtained by summing the contribution from each of the source energies.

Neutron Calculations. For neutron-penetration calculations the QAD codes use either a modified Albert-Welton kernel[6] or kernels obtained from the moments method solution of the Boltzmann equation. The Albert-Welton kernel, which is applicable only to mixtures of hydrogenous materials and heavy materials, assumes that a neutron which suffers a collision with hydrogen is essentially lost. With the moments method kernels the neutron spectrum penetrating a shield is determined on the basis of the equivalent length of a reference material between the source point and the receiver point. This equivalent length is calculated by weighting the penetrating distance for each material (other than the reference material) in the structure in accordance with the removal cross section of that material. Thus

the equivalent reference material penetration distance $R_{eq.}$ (in g/cm^2) is given by

$$R_{eq.} = \frac{\sum_k X_k \; \Sigma(r)_k \; \rho_k}{\Sigma(r)_{ref.\ mat.}} + (X\rho)_{ref.\ mat.} \quad , \tag{5}$$

where X is the path length through material k, $\Sigma_k(r)$ is the removal cross section (in cm^2/g), and ρ_k is the material density. The neutron kernel, $K(E,R_{eq.})$, as determined by moments method solution for a point isotropic fission source in an infinite medium is used to calculate the neutron flux in the shield according to the equation

$$\Phi(E,X) = \sum_i \frac{S_i}{4\pi X_i^2} K(E,R_{eq.,i}) \quad , \tag{6}$$

where

i = source point-detector point index,

$\Phi(E,X)$ = neutron flux of energy E at X (neutrons/cm^2·sec·MeV),

S = volume-weighted neutron point source strength (neutrons/sec),

X = source-detector separation distance (cm),

$K(E,R_{eq.}) = 4\pi R^2_{eq.} \Phi(E,R_{eq.})$

= neutron kernel (neutrons/sec-MeV per source neutron/sec).

The total flux at X is obtained by summing the contribution from each of the energy groups:

$$\Phi(X) = \sum_{j=1}^{10} \Phi(E_j,X) \; \Delta E_j \quad , \tag{7}$$

where

$\Phi(E_j,X)$ = neutron flux at energy E_j (neutrons/cm^2·sec·MeV),

ΔE_j = width of jth energy group (MeV).

The neutron calculations are made using the energy group structure in Table 1.

Table 1. Fit Constants[a] for LiH Kernel

Neutron Energy (MeV)	Energy Group Limits (MeV)	A_1	A_2	A_3	B_1	B_2	B_3
10.0	12-9	1.5574-4[b]	3.9919-3	3.1305-3	7.8882	4.7594	36.008
8.0	9-7	2.9793-4	1.4875-2	1.1189-2	71.145	4.0018	29.366
6.0	7-5.5	6.5803-4	6.4820-2	4.5273-2	63.278	3.2786	22.755
5.0	5.5-4.5	1.0674-3	0.1347	9.7436-2	59.882	3.0226	20.126
4.0	4.5-3.5	1.6179-3	0.23834	0.19346	57.325	2.8459	18.300
3.0	3.5-2.5	2.7431-3	0.45526	0.43045	55.181	2.7408	17.069
2.0	2.5-1.5	4.4618-3	0.80642	0.80253	53.206	2.7536	16.130
1.0	1.5-0.835	8.2709-3	1.3454	1.6334	51.610	3.1682	15.477
0.67	0.835-0.5	1.0291-2	1.5054	2.1089	51.305	3.6208	15.360
0.33	0.5-0.1	1.2554	1.9358	2.7486	52.033	4.7745	15.574

a. For these constants, the basis is one fission neutron and the units of R in Eq. (5) are g/cm^2 (distance x density).
b. Read as 1.5574×10^{-4}, etc.

The reference materials for which neutron kernels have been available in QAD-P5A are H_2O, beryllium, and carbon. The kernels were obtained by fitting the NDA moments data[7] by the exponential expansion

$$K(E,R_{eq.}) = \sum_{n=0}^{4} \exp\left[A_n(E)\, R_{eq.}^n\right] , \tag{8}$$

where $A_n(E)$ is the coefficient for the exponential fit of the number spectrum of neutrons of energy E in H_2O, beryllium, or carbon.

In the work reported here a neutron kernel for LiH has been added to the QAD-P5A code. Trubey,[8] using the moments-method code RENUPAK,[9] calculated the neutron spectrum as a function of distance in LiH for a point isotropic source with a Cranberg[10] fission spectrum, and QAD-P5A uses these data to calculate the neutron kernel for LiH with an expression of the form

$$K(E,R_{eq.}) = R_{eq.} \sum_{n=1}^{3} \frac{A_n(E)}{B_n(E)} \exp\left[- R_{eq.}/\sqrt{B_n(E)}\right] , \tag{9}$$

where $R_{eq.}$ is the equivalent distance in LiH, and A(E) and B(E) are the fit constants for neutron energies corresponding to the average of the energy groups shown in Table 1.

An assessment of the accuracy of the RENUPAK calculations was made by comparing single-collision doses calculated from the RENUPAK neutron spectra as a function of penetration with the doses obtained from Monte Carlo calculations by Kam and Clark,[11] the latter calculations using the best available cross sections. As shown in Fig. 1, the agreement is generally very good up to about 70 cm, after which Trubey's calculations rise to about a factor of 2 too high at 100 cm. Although this comparison is for integral quantities, it does create confidence that the differential RENUPAK results are reasonably good and will tend to produce an overestimate of the dose if the model used is reasonably good.

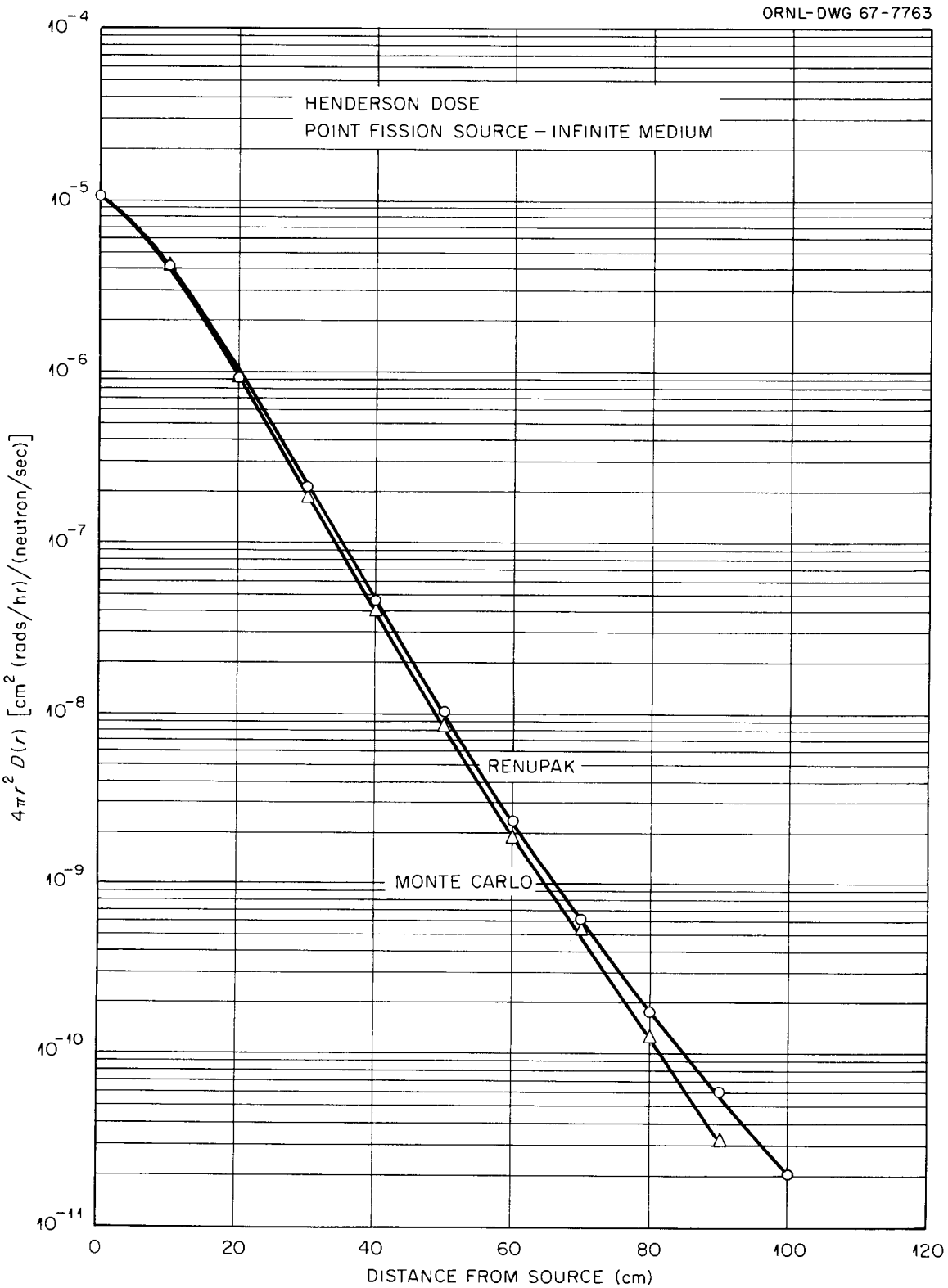

Fig. 1. Comparison of Single-Collision RENUPAK Doses with Monte Carlo Doses.

Input to QAD-P5A (360)*

Much of the input to the QAD-P5A code is identical to that for the original QAD-P5 code. Since this input has been presented in detail elsewhere,[1] it will not be repeated here. The listing given here consists only of the revisions necessary to use QAD-P5A, the version of QAD-P5 modified by Lahti to include the following:

(1) Gamma-ray attenuation coefficients (cm^2/g) for all elements (Z = 1 to 92) and 20 energy groups (0.05, 0.06, 0.08, 0.1, 0.15, 0.2, 0.3, 0.4, 0.5, 0.6, 0.8, 1.0, 1.5, 2.0, 3.0, 4.0, 5.0, 6.0, 8.0, and 10.0 MeV). The attenuation coefficients for these energies are obtained by linear interpolation of the data given in NBS-583 (Ref. 12) and LA-2337 (Ref. 13).

(2) Bivariant coefficients for buildup factors for energy absorption and dose buildup in H_2O, Al, Fe, Pb. QAD-type buildup factor coefficients are calculated from the coefficients presented in APEX-510 (Ref. 4) for the given input energies.

(3) Neutron removal cross sections (cm^2/g) for all elements (Z = 1 to 100). The removal cross sections are taken from the Reactor Handbook (Ref. 14) or calculated from fitted curves:

$$\frac{\Sigma_r}{\rho} = \begin{cases} 0.61A, & \text{for } A < 15 \\ 0.162A^{-0.516}, & \text{for } A > 15 \end{cases},$$

where A is the mass number.

(4) Coefficients from curve fits of neutron moments method spectra for point fission sources in an infinite medium of H_2O, Be, or C (curves from Ref. 7, curve fits from Ref. 15).

(5) Conversion factors to convert from neutron flux to Snyder-Neufeld[16] rads and heating in Fe, Be, C, Al.

---

*The input included here is based on information provided by G. P. Lahti, Lewis Research Center, Cleveland, Ohio. The data included in this input was also added (by Lahti) to the QAD4 code (Ref. 1), and the modified code is identified as QADHD: G. P. Lahti, QADHD Point-Kernel Radiation Shielding Computer Code to Evaluate Propellant Heating and Dose to Crew During Engine Operation, NASA TM X-1397 (June 1967).

As a result of the above additions, the material attenuation coefficient cards, the Albert-Welton coefficient cards, the neutron moments method attenuation coefficient cards, and the buildup factor coefficient cards required in the original QAD-P5 code and are not needed for QAD-P5A. New cards required by QAD-P5A are an Element card (a list of atomic numbers of elements used), and a gamma EBAR card (a list of mean gamma-ray energies for the various energy groups).

This input to QAD-P5A (360) consists of the following:

Card A: FORMAT (18A4)

72 Columns of Hollerith Information

Card B: FORMAT 8 (I5,I4)

Column	Variable	
1-5	LSO	Number of increments along the R(cyl.), X(cart.), or ρ(spher.) axis which specify the division of source volume. (1 ≦ LSO ≦ 100)
6-9	MSO	Number of increments along the Z(cyl.), Z(cart.), or θ(spher.) axis which specify the divisions of source volume. (1 ≦ MSO ≦ 100)
10-14	NSO	Number of increments along the φ(cyl.), Y(cart.), or φ(spher.) axis which specify the divisions of source volume. (1 ≦ NSO ≦ 100)
15-18	MAT	Total number of elements used in problem. 1 ≦ MAT ≦ 20. (If MAT ≦ 0, Cards M through W not needed; cards of previous case are used; see list of options below.)
19-23	NCOMP	Number of compositions. 1 ≦ NCOMP ≦ 40. (If NCOMP ≦ 0, cards O through W not needed; Cards of previous case are used; see list of options below.)
24-27	NREG	Number of regions. 1 ≦ NREG ≦ 50. (If NREG ≦ 0, use regions of previous case; see list of options below.)
28-32	NRGY	Number of gamma-ray energy groups. 1 ≦ NRGY ≦ 30.

Column	Variable	
33-36	NBOUND	Total number of boundaries. 1 ≦ NBOUND ≦ 50. (If NBOUND ≦ 0, use boundaries of previous case; see list of options below.)
37-41	NSOPT	Geometry of source: Set NSOPT = 0 for Cylinderical. NSOPT = 1 for Cartesian. NSOPT = 2 for Spherical. (See list of options below for description of additional input options that may be used here.)
42-45	NZSO	The most probable source region, i.e., the region most likely to contain the source points.
46-50	ISRC	Type of source: ISRC = 0; source of the previous case is used. ISRC = 1; cosine-distributed source is used. ISRC = 2; source is computed using the weighting values input along each coordinate axis.
51-54	INEUT	If INEUT > 0, neutron calculation will be made; if INEUT ≦ 0, no neutron calculation will be made.
55-59	NGPF	First source point for which ray geometry printout is desired.
60-63	NGPL	Last source point for which ray geometry printout is desired.
64-68	NGPI	The incremental step size used to select additional source points for ray geometry printout.
69-72	NGINT	Number of additional gamma calculations to be made.

NOTE: The ray geometry printout will give the distance traveled through each region from the specified source point to the detector. The first source point for which this is done is NGPF. The next source point is selected by adding NGPI to NGPF. This is continued until the last source point, NGPL, is reached. (The ray geometry from the coordinate origin is always printed out.) This is useful for finding errors in the geometry input.

Card C: FORMAT (8E 9.4)

Column	Variable	
1-9	ASO	The total source strength is fissions/sec, captures/sec, or decays/sec.
10-18 12-27	XISO(1,1) XISO(2,1)	Constants for cosine source distribution (if ISRC = 1) as a function of the R(cyl.), X(cart.), or φ(spher.) coordinate.
28-36 37-45	XISO(1,2) XISO(2,2)	Constants for cosine source distribution (if ISRC = 1) as a function of the φ(cyl.), Y(cart.), or φ(spher.) coordinate.
46-54 55-63	XISO(1,3) XISO(2,3)	Constants for cosine source distribution (if ISRC = 1) as a function of the Z(cyl.), Z(cart.), or θ(spher.)

NOTE: Using this cosine-distributed source OPTION (ISRC = 1), the code calculates the source strength at a point (A,B,C) as

$$\text{Source Strength } (A,B,C) = ASO \cos [XISO(1,1)(A - XISO(2,1))] \times \cos [XISO(1,2)(B - XISO(2,2))] \cos [XISO(3,1)(C - XISO(3,2))]$$

where A, B, and C are the coordinates of the point in the appropriate coordinates system. If all values of XISO are input as zero, a flat or uniformly distributed source will be obtained when using this source option.

Card(s) D: FORMAT (8E9.4)

RSO	Coordinates of source volume for R(cyl.), X(cart.), or ρ(spher.) (LSO + 1 values).

Card(s) E:

ZSO	Coordinates of source volume for Z(cyl.), Z(cart.), or θ(spher.) (MSO + 1 values).

Card(s) F:

PHISO	Coordinates of source volume for φ(cyl.), Y(cart.), or φ(spher.) (NSO + 1 values).

NOTE: The QAD code will select a point midway between the coordinates specified as the midpoint of the source volume.

Card(s) G: (If ISRC = 2) FORMAT (8E9.4)

Column	Variable	
	FL	Weighting factors for source strength at each point specified on Card D.

Card(s) H: (If ISRC = 2) FORMAT (8E9.4)

	FM	Weighting factor for source strength at each point specified on Card E.

Card(s) I: (If ISRC = 2) FORMAT (8E9.4)

	FN	Weighting factor for source strength at each point specified on Card F.

Card(s) J: FORMAT (I5,I4)

1-5	IV	Number of boundaries used in describing this region; if region is an outer region, a minus sign must precede the number ($1 \leqq IV \leqq 6$).
6-9	NCOMPZN	Composition number of this region.

Card(s) K: FORMAT (6 (I5,I4))

1-5	± LBD	± Boundary number; a + or - sign indicates whether this boundary is + or - with respect to the region being described.
6-9	NTRYZN	Probable region of entry if this boundary is crossed.
10-14	± LBD	± Boundary number.
15-18	NTRYZN	Probable region of entry.
19-23	± LBD	± Boundary number.
24-27	NTRYZN	Probable region of entry.
28-32	± LBD	± Boundary number.
33-36	NTRYZN	Probable region of entry.
37-41	± LBD	± Boundary number.
42-45	NTRYZN	Probable region of entry.
46-50	± LBD	± Boundary number.
50-54	NTRYZN	Probable region of entry.

NOTE: Up to 6 boundaries may be used to describe a region. On Card K six pairs of numbers (± LBD, NTRYZN) corresponding to six boundaries are indicated; however, fewer boundary numbers can appear on Card K.

Column	Variable	

NOTE: Cards J and K are required to describe one region. A similar pair of cards must follow for each region to be described.

NOTE: The J and K cards must appear in the order in which the regions are numbered.

Card(s) L: FORMAT (I5,I4,7E9.4)

1-5	LBD	Boundary number.
6-9	NEQ	Boundary equation type number.

1 = General Quadratic
$AX^2 + BY^2 + CZ^2 + X_0X + Y_0Y + Z_0Z - K = 0,$

2 = Spheroid, Conic, or Cylinder
$A(X-X_0)^2 + B(Y-Y_0)^2 + C(Z-Z_0)^2 - K = 0,$

3 = Cylinder Parallel to Z Axis
$(X-X_0)^2 + (Y-Y_0)^2 - K = 0,$

4 = X Plane, $X - K = 0,$

5 = Y Plane, $Y - K = 0,$

6 = Z Plane, $Z - K = 0.$

10-18	ABD	A in above equations.
19-27	BBD	B in above equations.
28-36	CBD	C in above equations.
37-45	XOBD	X_0 in above equations.
46-54	YOBD	Y_0 in above equations.
55-63	ZOBD	Z_0 in above equations.
64-72	DBD	K in above equations.

Card(s) M: FORMAT (8 (I5,I4))

1-5	NBLD	Buildup factor selection:

1 = H_2O dose buildup factor,
2 = Al dose buildup factor,
3 = Fe dose buildup factor,
4 = Pb dose buildup factor,
5 = H_2O energy absorption buildup factor,
6 = Al energy absorption buildup factor,

Column	Variable	
		7 = Fe energy absorption buildup factor, 8 = Pb energy absorption buildup factor.
6-9	MATZ	Atomic number of first element used.
10-14	MATZ	Atomic number of second element used.
	.	
	.	
	.	
	MATZ	Atomic number of last element used.

Card(s) N: FORMAT (8E9.4)

1-9	COMP	Density of first element in this composition.
10-18	COMP	Density of second element in this composition
	.	
	.	
	.	
	COMP	Density of last element in this composition.

NOTE: A similar list of the densities (in g/cm^3) must be included for <u>each</u> composition. The density for each of the elements specified on Card M must be listed even though it may be zero for the particular composition. The order of these cards must correspond to the composition numbers. The list of densities for a particular composition must begin on a new Card N.

Card(s) O: FORMAT (8E9.4)

	EBAR	Mean gamma energy for each group (MeV).

Card(s) P: FORMAT (8E9.4)

	GAMEN	The gamma-ray source energy spectrum, i.e., MeV/fission, MeV/capture, or MeV/decay in each gamma-ray energy group. (The units here depend upon the units on Card C for ASO.)

Card(s) Q: FORMAT (8E9.4)

	CONV	Gamma flux-to-dose conversion factor for each gamma-ray energy group. For example, (rads/hr)/(MeV/cm^2 sec).

Column	Variable	
Card(s) R: FORMAT (8E9.4)		
	FEABSG	Gamma flux-to-heat conversion factor in Fe for each gamma-ray energy group. For example, (W/g)/(MeV/cm^2 sec).
Card(s) S: FORMAT (2A4)		
1-8	WIDTHT	Total width of gamma-ray energy range (Example, 0.1 - 4.0).
Card(s) T: FORMAT (6 (3A4))		
1-12	WIDTHG	Width of first gamma group (Example, 4.0 - 3.0).
13-24	WIDTHG	Width of second gamma group (Example, 3.0 - 2.0).
	. . .	
	WIDTHG	Width of last gamma group (Example, 0.5 - 0.1).
Card U: FORMAT (18A4)		
1-12 13-24	UNITG UNITG	Units of gamma flux (MeV/cm^2 sec).
25-36 37-48	UNITG UNITG	Units for gamma dose according to Card Q (rads/sec).
49-60 61-72	UNITG UNITG	Units for gamma heating in Fe according to Card R (W/g).
Card(s) V: FORMAT (8E9.4) (Use only if NGINT > 0 on Card B.)		
1-9	WTG	Conversion factor for first gamma-ray energy group.
10-18	WTG	Conversion factor for second gamma-ray energy group.
	. . .	
	WTG	Conversion factor for last gamma-ray energy group.

NOTE: These are conversion factors to convert from gamma energy flux to any other units one may wish to obtain. There must be NGINT sets of these factors.

Column	Variable	
Card W: FORMAT (6 (3A4)) (If NGINT > 0)		
	UNITGI	The units for each of these additional quantities according to the conversion factors of card V; these units will be used to title the output. Format is the same as for Card U.
Card(s) X: FORMAT (3E9.4, 2(I5,I4))		
1-9	RRC	The R, X, or ρ detector coordinate (cm).
10-18	ZRC	The Z, Z, or θ detector coordinate (cm or radians).
19-27	PHIRC	The φ, Y, or φ detector coordinate (cm or radians).
28-32	NRCOPT	Receiver Geometry Option: 0 = Cylindrical 1 = Cartesian 2 = Spherical
33-36 37-41 42-45	NGPF NGPL NGPI	Same meaning as on Card B; if these values are greater than zero, they override the values on Card B.

NOTE: One Card X must be used for each detector; any number of detectors may be used.

Card Y:

31-32	A "-1" in these columns signals the end of a problem set; additional problems may be stacked after this card.

NOTE: Receiver cards are read until a "-1" is encountered; then the program returns to read Card A of the next case.

For the first case in any run, a full set of data cards (A through Y) is required. For succeeding cases stacked behind the first case some of the data cards may be omitted if various options are employed. Descriptions of these options are as follows:

Option 1. If ISRC = 0 on Card B, Cards C through I are not required. The source of the previous case is used.

Option 2. If on Card B, NSOPT = 10 (cylindrical), = 11 (cartesian), or = 12 (spherical), read Card P (gamma spectrum) next. This option is useful with Options 1 and 3 for specifying capture gamma or decay gamma sources which occur in the core. In this case Card B would be followed by Card P and the detector Cards X. Option 2 may be used with Option 3 when the capture gamma source is to be specified in a region other than the core. In this case Card P follows Card I. The detector Cards X then follow Card P.

Option 3. If NREG ≦ 0 on Card B, Cards J through W are not required. Cards of the previous case are used.

Option 4. If NBOUND ≦ 0 on Card B, Cards L through W are not required. Cards of the previous case are used.

Option 5. If MAT ≦ 0 on Card B, Cards M through W are not required. Cards of the previous case are used.

Option 6. If NCOMP ≦ 0 on Card B, Cards O through W are not required. Cards of the previous case are used.

III. THE QAD-GEOM (360) CODE*

QAD-GEOM (360) is identical to QAD-P5A (360) except that the geometry used is either the generalized geometry of the 05R code[9] or a special cylindrical or spherical geometry, all of which are given by the 05R subroutine GEOM.

When the generalized geometry is used as many as 16 distinct media may be included, and the permissible boundaries may be of any shape which can be described by quadric surfaces used singly or in combination. The package of subroutines which accomplishes the tallying of neutron and/or gamma-ray paths through such systems is called GEOM.

The initial step in the description of a system for GEOM is to enclose the entire system in a rectangular parallelepiped whose faces are parallel with the xy, yz, and xz coordinate planes. This parallelepiped is then divided into several smaller parallelepipeds, called zones, by planes parallel to the coordinate planes and extending entirely across the system. The zones are, in turn, divided into smaller parallelepipeds, called blocks, by planes which are also parallel to the coordinate axes but which extend only across individual zones. The planes used as zone and block boundaries need not necessarily be boundaries between media; however, if a boundary between two media is a plane parallel to a coordinate plane, it is advantageous to make it a block or zone boundary. The use of the zone-block scheme allows complicated parts of the system under study to be divided into smaller blocks than may be needed for simpler regions. If the whole system is relatively simple or requires a similar description throughout, the system should be composed of one zone divided into many blocks rather than many zones of one block each.

Boundaries between media which are not also block boundaries may be any quadric surface. A quadric surface, defined by the zeros of a quadratic function, divides all space into two regions. In one region the function defining the surface will be positive; in the other, it will be negative. Each block may contain a maximum of 18 such surfaces as medium boundaries. The surfaces will divide the block into sectors, a sector

*Much of this section has been taken from Ref. 2.

being defined as a volume positive to one set of quadric surfaces but negative to another set. Each sector must contain only one medium which, however, may be the same as the medium in another sector. Spatial volumes containing a single medium that cannot be described by a single sector definition must be divided into two or more sectors. It is not necessary to mention every surface in the block in defining a sector. It is, in fact, more efficient to include in a sector definition only those surfaces which actually form the boundary of the sector. In addition, sectors containing the same medium may overlap without error.

As an example of the application of the preceding guidelines, consider a single block consisting of a hemisphere of material 1 completely surrounded by material 2, as sketched in Fig. 2. There are two quadric surfaces in the block: the sphere and the plane forming the base of the hemisphere (for convenience we consider the linear equation of the plane a kind of "degenerate" quadratic). It is assumed that the functions describing the surfaces are written in such a fashion that the interior of

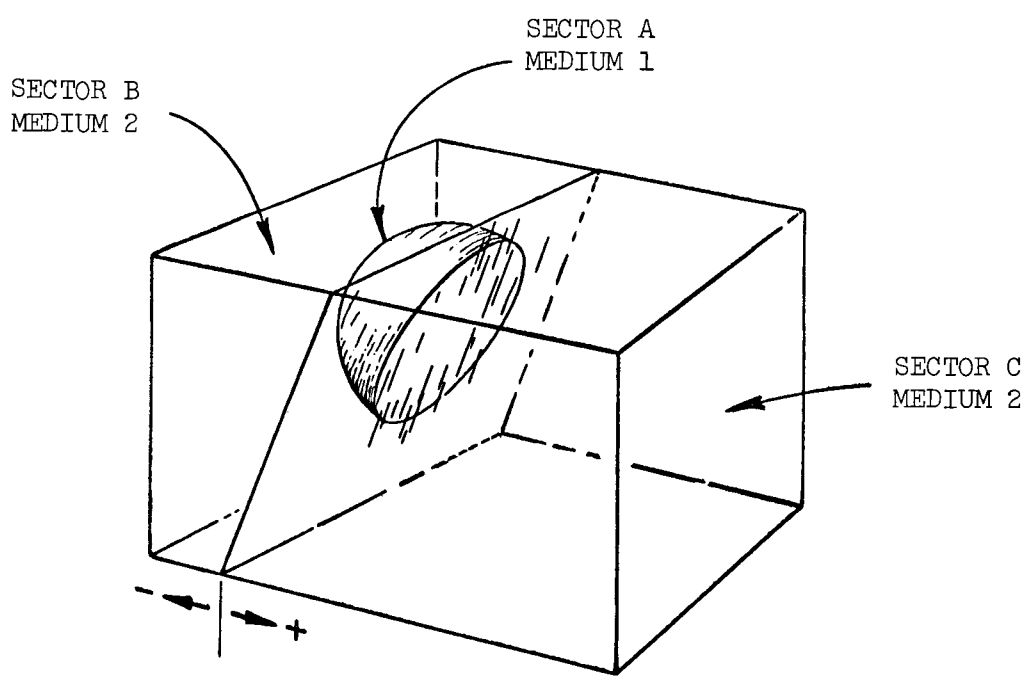

Fig. 2.

the hemisphere is negative to both surfaces. The block must be divided into at least three sectors and the most efficient division is as follows: sector A is the hemisphere, negative to both surfaces and containing medium 1; sector B is that volume of the block that is positive to the sphere and contains medium 2; and sector C is that volume of the block that is positive to the plane and contains medium 2.

In addition to the material media which may be treated, two non-material media may be specified: interior void and exterior void. Space which is inside the enclosing parallelepiped yet outside the system of interest, as well as all space outside the enclosing parallelepiped, is assumed to be filled with exterior void. When a particle enters an exterior void (denoted by medium number "0") it has escaped from the system and is no longer followed. When a particle enters an interior void (denoted by medium number "1000") it is treated as a medium within which the mean free path is infinite. Any particle entering an interior void is extended until it leaves the void, and the path length through the void is taken as zero mean free paths.

Care must be employed in the use of cones as quadric surfaces, since the quadratic equation describes a surface of two nappes. If, as is usual, the desired surface is but one nappe of the cone, a block boundary through the vertex must be used to cut off the surface.

When the geometry required is a cylinder or a sphere, considerable savings in programming and computing time may be effected by using special GEOM subroutines for these two cases. The cylindrical geometry is capable of handling a maximum of 20 concentric cylinders, and internal voids (denoted by medium number "1000") are treated as in the generalized geometry. The spherical geometry is capable of handling a maximum of 20 concentric spheres centered on $x = y = z = 0$. Internal voids (denoted by medium number "1000") are treated as in generalized geometry.

The input for all three subroutines, generalized, cylindrical, and spherical, is given below.

Input to QAD-GEOM (360) -- Generalized Geometry

The input to QAD-GEOM is the same as the input to QAD-P5A (360) except as follows:

CARD B:

Column	Variable	
24-27	NREG	Generalized geometry input control. If NREG > 0, geometry cards must be read in. If NREG ≦ 0, the geometry of the previous case is used.
33-36		Leave these columns blank since NBOUND is not needed.
42-45		Leave these columns blank since NZSO is not needed.

CARD(S) J: Eliminate.

CARD(S) K: Eliminate.

CARD(S) L: Eliminate.

The input for GEOM, listed below, now follows Card B.* (Note: All alphabetic input must be left-adjusted.)

CARD A: FORMAT ($I5^{a}$,5X,$A6^{b}$,IX,$A7^{c}$)

a. The integer "2".

b.**Sex of the programmer.

c.**Marital status of programmer (may be omitted if item b is "Male").

CARD B: FORMAT [A11,5(E10.5,A1)]

This card lists the zone boundaries along the X axis in increasing order, including the boundaries of the parallelepiped including the entire system. Since the number of boundaries depends upon the problem, commas in the A1 fields separating the boundaries are used to indicate that the list continues; the absence of a comma following the last boundary indicates that the list has ended. The A11 field is for the programmer's convenience and will be ignored by the code.

---

*Note that the GEOM input cards are designated by the same alphabetic series as the QAD cards. This duplication, which should not be confusing if recognized, results from the QAD and GEOM input cards being prepared independently.

**These somewhat surprising quantities arise from a moment of frivolity in programming GEOM; ignoring both b and c will produce an error message but will not affect the running of the program.

CARD(S) B': FORMAT [6(E10,5,A1)]

If the number of boundaries exceeds the five allowed by the format of Card B, the list is continued on as many Cards B' as are required.

CARD C: FORMAT [A11,5(E10.5,A1)]

Identical with Card B except that the listing is of the zone boundaries in order along the Y axis.

CARD C': FORMAT [6(E10.5,A11)]

Identical with Card B' but continues the Y axis zone boundaries.

CARD D: FORMAT [A11,5(E10.5,A1)]

Identical with Card B except that the listing is of the zone boundaries in order along the Z axis.

CARD D': FORMAT [6(E10.5,A1)]

Identical with Card B' but continues the Z axis zone boundaries.

NOTE: Cards E through P constitute a complete zone description. This set of cards must be included once for each zone.

CARD E: FORMAT $(\overset{a}{A6},\overset{\ell}{I5},\overset{m}{I5},\overset{n}{I5})$

a. The word ZØNE.

ℓ,m,n. Each zone is located in the system by three integers: ℓ, m, and n. These specify the zone as being the ℓth zone in the X direction, and the mth zone in the Y direction, and the nth zone in the Z direction. The integers ℓ, m, and n run from 1 to the maximum number of zones in each direction.

CARD F: FORMAT [A11,5(E10.5,A1)]

This card lists the block boundaries in this zone in increasing order along the X axis, including the boundaries of the zone.

CARD(S) F': FORMAT [6(E10.5,A1)]

This is a block list continuation card similar to Card B' of the zone listing.

CARD(S) G,G':

The same as Cards F and F' except that the block boundaries along the Y axis are listed.

CARD(S) H,H':

The same as cards F and F' except that the block boundaries along the Z axis are listed.

NOTE: Cards J - P: constitute a complete block description. This set of cards must be included once for each block in the zone.

CARD J: FORMAT $(\overset{a}{A6},\overset{\ell}{I5},\overset{m}{I5},\overset{n}{I5})$

a. The word BLØCK.

ℓ,m,n. Each block is located in the zone by three integers: ℓ, m, and n. These specify the block as being the ℓth block in the X direction, the mth block in the Y direction, and the nth block in the Z direction. The integers ℓ, m, and n run from 1 to the maximum number of blocks in each direction.

CARD K: FORMAT $[\overset{a}{A12},\overset{b}{10(I5,A1)}]$

a. The word MEDIA.

b. A list of media, sector by sector, in the block. As with other lists, a comma in the A1 field indicates that the list continues; its termination is indicated by the absence of the comma.

CARD(S) K': FORMAT [12(I5,A1)]

The continuation, if required, of the medium list.

CARD L: FORMAT $[\overset{a}{A12},\overset{b}{10(I5,A1)}]$

a. The word SURFACES.

b. A list of the quadric surfaces appearing in the block. Commas in the A1 field indicate that the list continues; a blank indicates the end of the list. The numbers appearing in this list derive from the order in which the surfaces are mathematically described on Card R, which will be described later in the input.

CARD L': FORMAT [8(I5,A1)]

The continuation, if needed, of the list begun on Card L.

CARD M: FORMAT ($\overset{a}{A6}$,$\overset{b}{18I3}$)

a. The word SECTØR.

b. The designation of each sector with reference to its position relative to the quadric surfaces. For every sector in the block there must be a card M, which will have as many references as there are surfaces in the block. The status of the sector is listed according to the following key:

+1: The sector is on the positive side of the surface.

-1: The sector is on the negative side of the surface.

0: The surface is not needed in the definition of the sector.

The order in which each reference to a quadric surface appears on each Card M must correspond to the order in which the quadric surfaces are listed on Card L. If there is only one sector in a block, Cards L and M should be omitted.

CARD N: FORMAT ($\overset{a}{I5}$,11A6)

a. The total number of quadric surfaces in the <u>entire system</u>. The alphabetic data in the A6 fields is ignored by the code.

CARD O: FORMAT [4($\overset{a}{E10.5}$,$\overset{b}{A5}$,$\overset{c}{A1}$)]

Each quadric surface is described by writing the quadratic function whose zeros define the surface in a fixed field format resembling the normal manner of writing functions. Each term in the function is specified by:

a. The coefficient of the term.

b. May be XSQ, YSQ, ZSQ (used for x^2, y^2, and z^2), XZ, YX, YZ, XY, ZX, YZ, X, Y, Z, or blank.

c. A non-blank character in this field indicates the end of the function. The next function must start on a new card.

An example of a GEOM input is shown in Fig. 3. It will be noted that the function is written (Card 0) in such a fashion that the exterior of the quadric surface is positive, in agreement with the sector designations of Card M.

Use of GEOM Subroutine. GEOM is given the starting and ending points of a particle path and returns with either the point where the path first enters a different medium or an indication that the entire path lies in the initial medium. The COMMON/GEOMC/ is used for communication between GEOM and the calling program. The variables and their uses are:

COMMON/GEOMC/MARK, XTWO, YTWO, ZTWO, ZONE, YONE,
XONE, NMED, NREC, ETA, ETAUSD, BLZON

MARK is used on return to signal the type of intersection:

MARK = 1, completed particle path in initial medium,
= 0, normal medium boundary crossing,
=-1, entered external void,
=-2, entered internal void.

The calling program should set MARK equal to 1 at the beginning of each new path. If, following a 0 or -2 return, it is desired to continue the path by starting at the intersection just found and giving a new point along the path, MARK should be left unchanged.

XTWO, YTWO, ZTWO are supplied by the calling program as the coordinates of the end of the path. Upon return from GEOM they will be the coordinates of the intersection point.

XONE, YONE, ZONE are supplied by the calling program as the coordinates of the start of the path. They are unchanged by GEOM.

NMED is supplied by the calling program as the initial medium number. Upon return from GEOM it will be the number of the new medium entered at the intersection point.

NREG is the region number of XTWO, YTWO, ZTWO. It is supplied by GEOM only at the end of particle path when MARK = 1.

CODED BY _____

DATE _____ REQUEST NO. _____

FORTRAN

PROBLEM _____

PROGRAM _____

PAGE 1 OF 1

SAMPLE GEØM INPUT

STATEMENT TYPE	NUMBER	CONT	FORTRAN STATEMENT	IDENTIFICATION
	2		MALE	A
X	ZØNE		-1., 1.	B
Y	ZØNE		-1., 1.	C
Z	ZØNE		-1., 1.	D
	ZØNE		1 1 1	E
X	BLØCK		-1., 1.	F
Y	BLØCK		-1., 1.	G
Z	BLØCK		-1., 1.	H
	BLØCK		1 1 1	J
	MEDIA		1, 2	K
	SURFACES		1	L
	SECTØR +1			M
	SECTØR -1			M
	REGIØNS		9, 10	N
	SURFACES		1	Ø
	SECTØR +1			P
	SECTØR -1			P
	1		ØNE QUADRIC SURFACE	Q
			1.XSQ +1.YSQ +1.ZSQ -1. $	R

UCN-1653A (23 10-63)

Fig. 3. Sample GEOM Input.

ETA is the length of the initial path supplied by the calling program in whatever units desired. It is unchanged by GEOM.

ETAUSD is the length of the final path given by GEOM in the same units as ETA; i.e., if $D1^2 = (XONE-XTWO)^2 + (YONE-YTWO)^2 + (ZONE-ZTWO)^2$, where XTWO, YTWO, ZTWO have the initial values supplied by the calling program, and if D2 is the same quantity when XTWO, YTWO, ZTWO have the final values given by GEOM, then ETAUSD = (D2/D1) ETA.

BLZON is a packed word required by GEOM which gives the block and zone location of a point. It should be treated as a fourth coordinate necessary to the description of a point. It must be supplied by the calling program and must refer to XONE, YONE, ZONE. It can be obtained initially by calling LOOKZ. Upon return from GEOM it will refer to XTWO, YTWO, ZTWO.

For particle paths through an internal void (i.e., when the initial medium is 1000), the calling program should specify the direction of the flight (by numbers proportional to the direction cosines) in the variables XTWO, YTWO, ZTWO and also set XONE, YONE, ZONE. GEOM will extend the path in the direction specified until the path leaves the internal void; it will then return with XTWO, YTWO, ZTWO which give the point for entering the new medium, and with ETAUSD = 0.

The calling sequences used with GEOM are:

1. To read in the input and initialize the routine:

   CALL JOMIN (IDDR)

   IDDR is an array that JOMIN can use to store the geometry input. On return IDDR (1) will contain the number of cells of storage used for input (fixed point).

2. To obtain NMED, NREG, and BLZON for a source point:

   CALL LOOKZ (X,Y,Z)

   NMED, NREG, and BLZON will be returned in the COMMON locations.

3. To analyze a path:

   CALL GEOM

GEOM Error Messages. During the operation of GEOM two types of error may occur, each of which will cause the writing of an error message and ERROR will be called. The possible errors are:

(1) The block and zone of a point cannot be found.

The first error listed is almost certainly due to GEOM being given a starting point which is outside the system. The error message reads "YOU ARE LOST."

(2) The medium cannot be determined.

The second error occurs when a path reaches a point that is not contained within any of the sectors described in the input. Although most errors of this type stem from input blunders, a few may be due to machine roundoff. The latter fraction can be avoided by care in describing the configuration. For example, consider a block containing a cylinder that has a sphere inscribed in it (see Fig. 4). This could be described in

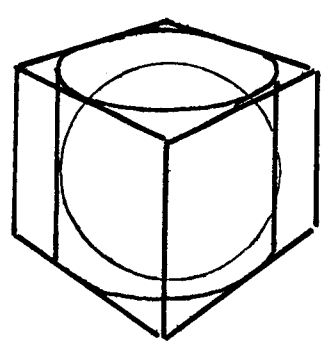

Fig. 4

two ways. In the first, Sector 1 is inside the sphere and inside the cylinder. Sector 2 is outside the sphere but inside the cylinder, and Sector 3 is inside the block but outside both the sphere and the cylinder. Although the cylinder supposedly is tangent to the sphere, machine roundoff may result in points which are apparently inside the sphere but outside the cylinder. This could cause an error stop since such points would fit in none of the sectors.

In the second method of describing this configuration, Sector 1 is inside the sphere and the cylinder is irrelevant. Sector 2 is outside the sphere but inside the cylinder, and Sector 3 is outside the cylinder and the sphere is irrelevant. Now points apparently inside the sphere but outside the cylinder can be placed by the routine in either Sector 1 or Sector 3, and no error stop will occur.

There are several types of input error which will cause an error printout and termination of the job. The printouts are self-explanatory. The error will usually be in the line of output preceding the error printout.

Input to QAD-GEOM (360) -- Cylindrical Geometry

The input for QAD-GEOM (360) for cylindrical geometry is the same as the input for the generalized geometry except that special geometric input cards must be included between Cards B and C. The cards which follow Card B are given below:

CARD 1: FORMAT (I5,5X,2A4)
a b

a. The integer "2".

b. Sex of the user.

CARD(S) 2: FORMAT (E10.5)

The radii of the concentric cylinders are specified on separate cards; i.e., there must be a Card 2 for each radii. The radii must be input in increasing order. A blank Card 2 ends the radii input (maximum of 20 radii).

CARD(S) 3: FORMAT ($\overset{a}{E10.5}$,$\overset{b-u}{12I5/8I5}$)

a. The height of the cylinder starting with the first height above the x-y plane.

b. The number of the medium enclosed by the height given in (a) and the first radius on Card 2.

c. The number of the medium enclosed by the height given in a and the second radius of Card 2.

.
.
.

u. The number of medium enclosed by the height given in (a) and the last radius of Card 2.

These cards are repeated for <u>each</u> height. A blank card ends this geometry input for up to 12 radii and two blank cards end it for more than 12 radii.

Continue with Card C of QAD-GEOM (360) input for the generalized geometry to complete this set of input.

<u>Input to QAD-GEOM (360) -- Spherical Geometry</u>

The input for QAD-GEOM (360) for spherical geometry is the same as the input for the generalized geometry except that special geometry input cards must be included between Cards B and C. The cards which follow Card B are given below:

CARD(S) 1: FORMAT ($\overset{a}{I5}$,$\overset{b}{E10.5}$)

a. Medium number (> 0).

b. Radius of medium. The radius is always the outer radius of the spherical shell containing the medium.

Card(s) 1 must be input in order of increasing radius. Two blank Cards 1 signal the end of the input.

Continue with Card C of QAD-GEOM (360) input for the generalized geometry to complete this set of input.

IV. INPUT FOR ADDITION OF LiH KERNEL TO QAD-P5A AND QAD-GEOM

A lithium hydride kernel can be added to both QAD-P5A and QAD-GEOM for use in place of the H_2O, beryllium, or carbon kernel. With the LiH kernel the spectral changes associated with neutron penetration are based on LiH transport data.

The modifications of the QAD code to include the lithium hydride kernel requires changes in only two of the subroutines: Kernel and Moment.

The input for the code containing the lithium hydride kernel is identical to those for QAD-P5A (360) and QAD-GEOM (360), whichever is being used. The neutron removal cross section for LiH is included in subroutines XSECO as element 100 for use in conjunction with this kernel.

ACKNOWLEDGMENT

The authors wish to express appreciation to H. C. Claiborne of the Neutron Physics Division for his many pertinent criticisms and careful review of the manuscript. John D. Amburgy of the Mathematics Division was most helpful in the conversion of the QAD program to FORTRAN IV and the running of the sample problems.

REFERENCES

1. R. E. Malanfant, QAD: A Series of Point-Kernel General-Purpose Shielding Programs, LA-3573 (Apr. 5, 1967).

2. D. C. Irving et al., 05R, A General-Purpose Monte Carlo Neutron Transport Code, ORNL-3622 (February 1965).

3. H. Goldstein and J. E. Wilkins, Calculation of the Penetration of Gamma Rays, NYO-3075 (1954).

4. M. A. Capo, Polynomial Approximation of Gamma Ray Buildup Factors for a Point Isotropic Source, APEX-510 (November 1958).

5. H. Goldstein and J. E. Wilkins, NYO-3075 op. cit.

6. R. D. Albert and T. A. Welton, A Simplified Theory of Neutron Attenuation and Its Application to Reactor Shield Design, WAPD-15 (November 1950).

7. A. D. Krumbein, Summary of NDA Unclassified Results of Moments Calculations for Penetration of Neutrons Through Various Materials, NDA-92-2 (Rev.) (Aug. 30, 1957).

8. D. K. Trubey, ORNL unpublished results.

9. J. Certaine, E. DeDufour, and G. Rabonowitz, RENUPAK, an IBM 704 Program for Neutron Moment Calculations, NDA-2120-3 (Dec. 1, 1959).

10. L. Cranberg et al., Phys. Rev. 103, 662 (1956).

11. F. B. Kam and F. S. Clark, Fission Spectrum Neutron Dose Rate Attenuation and Gamma Ray Exposure Dose Buildup Factors for Lithium Hydride, ORNL-TM-1744 (Jan. 13, 1967).

12. G. W. Grodstein, X-Ray Attenuation Coefficients for 10 keV to 100 MeV, NBS-583 (April 1957).

13. E. Storm et al., Gamma-Ray Absorption Coefficients for Elements 1 Through 100, LA-2237 (November 1958).

14. R. Aronson and C. N. Klahr, Reactor Handbook, Vol. III, Part B, edited by E. P. Blizard and L. S. Abbott, Interscience Publishers, New York, 1962.

15. W. E. Edwards and H. M. Van Volkenburg, Polynomial Expressions Fitted to NDA Gamma Ray Buildup Data, XDC 55-6-174 (June 1955).

16. W. S. Snyder and J. Neufeld, Calculated Depth Dose Curves in Tissue for Broad Beams of Fast Neutrons, ORNL-1872 (Oct. 27, 1955).

17. G. P. Lahti, QADHD Point-Kernel Radiation Shielding Computer Code to Evaluate Propellant Heating and Dose to Crew During Engine Operation, NASA TM X-1397 (June 1967).

APPENDIX A. SAMPLE PROBLEMS

		Page No.
Problem 1.	Shipping Cask - QAD-P5A (360)	
	Input	41
	Output	44
Problem 2.	Shipping Cask - QAD-GEOM (360)	
	Input	52
	Output	55
Problem 3.	Shipping Cask - QAD-GEOM (360) Cylindrical Example	
	Input	63
	Output	65
Problem 4.	QAD-GEOM (360) Spherical Example	
	Input	73
	Output	75

CODED BY _____

DATE _____ REQUEST NO. _____

FORTRAN

PROBLEM _____

PROGRAM _____

PAGE _____ OF _____

QAD-P5A(360) EXAMPLE INPUT – SHIPPING CASK

STATEMENT TYPE	NUMBER	CONT	FORTRAN STATEMENT	IDENTIFICATION
			QAD-P5A(360) EXAMPLE PRØBLEM SHIPPING CASK	CARD A
			10 58 5 4 3 6 8 7 0 1 1 0 1 150 149 0	CARD B
			1.0 0.0 0.0 0.0 0.0 0.0 0.0	CARD C
			0.0 1.433 2.866 4.299 5.732 7.165 8.598 10.031	CARD D1
			11.464 12.897 14.33	CARD D2
			20.0 70.0 72.0 74.0 76.0 78.0 80.0 82.0	CARD E1
			84.0 86.0 88.0 90.0 92.0 94.0 96.0 98.0	CARD E2
			100.0 102.0 104.0 106.0 108.0 110.0 112.0 114.0	CARD E3
			115.0 116.0 117.0 118.0 119.0 120.0 121.0 122.0	CARD E4
			123.0 124.0 125.0 126.0 128.0 130.0 132.0 134.0	CARD E5
			136.0 138.0 140.0 142.0 144.0 146.0 148.0 150.0	CARD E6
			152.0 154.0 156.0 158.0 160.0 162.0 164.0 166.0	CARD E7
			168.0 170.0 220.0	CARD E8
			0.0 .6283 1.2566 1.8849 2.5132 3.1416	CARD F
	3		1	CARD J
	1		2 6 3 -5 3	CARD K
	3		2	CARD J
	2		3 6 3 -5 3	CARD K
	3		3	CARD J
	3		4 7 5 -4 6	CARD K

CODED BY _____ DATE _____ REQUEST NO. _____

FORTRAN

PROBLEM _____ PROGRAM _____ PAGE _____ OF _____

QAD-P5A(360) EXAMPLE INPUT - SHIPPING CASK

STATEMENT TYPE	STATEMENT NUMBER	CONT	FORTRAN STATEMENT	IDENTIFICATION
	-3		2	CARD J
	-3		3 7 5 -4 6	CARD K
	-1		2	CARD J
	-7		3	CARD K
	-1		2	CARD J
	4		3	CARD K
	1		3 205.35	CARD L1
	2		3 400.00	CARD L2
	3		3 1725.3	CARD L3
	4		6 0.0	CARD L4
	5		6 20.00	CARD L5
	6		6 220.00	CARD L6
	7		6 240.00	CARD L7
	4		8 26 82 92	CARD M
	0.4587		.00725 0.0 3.412	CARD N1
	0.0		0.0 0.0 0.0	CARD N2
	0.0		0.0 11.35 0.0	CARD N3
	0.630		1.100 1.550 1.990 2.380 2.750 3.250 3.700	CARD O
	1.386E+16		2.565E+15 6.430E+15 1.362E+14 4.165E+14 5.504E+13 4.180E+12 2.952E+12	CARD P
	1.1626E-31		.8397E-32 .4135E-32 .8691E-33 .2941E-33 .6476E-34 .1234E-34 .4810E-3	CARD Q

CODED BY _____
DATE _____ REQUEST NO. _____

FORTRAN

PROBLEM _____
PROGRAM _____
PAGE _____ OF _____

STATEMENT TYPE	NUMBER	CONT	FORTRAN STATEMENT	IDENTIFICATION
			QAD-P5A(360) EXAMPLE INPUT - SHIPPING CASK	
1.0	1.0	1.0	1.0 1.0 1.0 1.0 1.0	CARD R
0.4-4.0				CARD S
0.4-0.9	0.9-1.35	1.35-1.8	1.8-2.2 2.2-2.6 2.6-3.0	CARD T1
3.0-3.5	3.5-4.0			CARD T2
PHØTØNS PER SQ CM SEC		MRADS	PER HR	CARD U
41.537	120.0	0.0		CARD X1
50.000	120.0	0.0		CARD X2
		-1		CARD Y

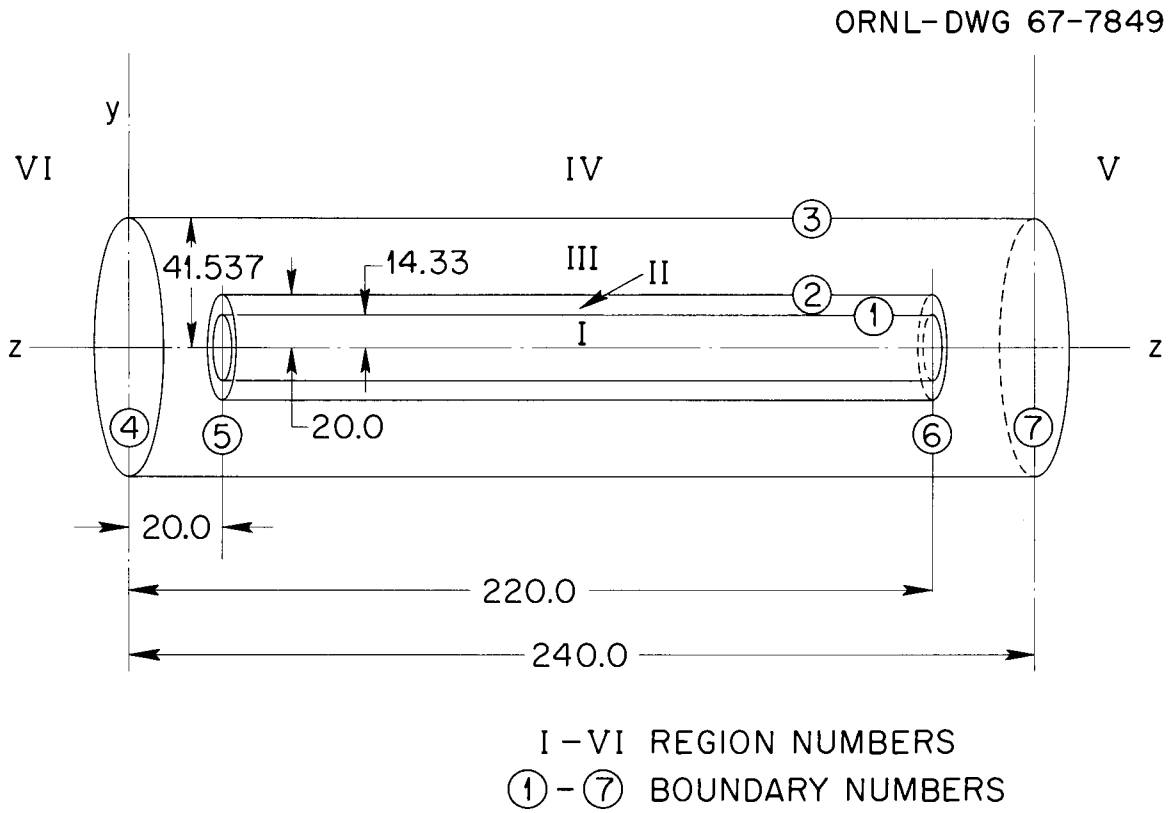

Fig. A1. Geometry for QAD-P5A(360) Example Problem.

```
QAD-P5A(360) EXAMPLE PROBLEM  SHIPPING CASK

CONTROL    10    58     5     4     3     6     8     7     0     1     1     0     1   150   149     0
                        0    -9     1    10     0     0     0     0     0     0     0     0     0     0

SOURCE  1.0000E 00  0.0          0.0          0.0          0.0          0.0          0.0

     R  0.0         1.4330E 00   2.8660E 00   4.2990E 00   5.7320E 00   7.1650E 00   8.5980E 00   1.0031E 01
        1.1464E 01  1.2897E 01   1.4330E 01

     Z  2.0000E 01  7.0000E 01   7.2000E 01   7.4000E 01   7.6000E 01   7.8000E 01   8.0000E 01   8.2000E 01
        8.4000E 01  8.6000E 01   8.8000E 01   9.0000E 01   9.2000E 01   9.4000E 01   9.6000E 01   9.8000E 01
        1.0000E 02  1.0200E 02   1.0400E 02   1.0600E 02   1.0800E 02   1.1000E 02   1.1200E 02   1.1400E 02
        1.1500E 02  1.1600E 02   1.1700E 02   1.1800E 02   1.1900E 02   1.2000E 02   1.2100E 02   1.2200E 02
        1.2300E 02  1.2400E 02   1.2500E 02   1.2600E 02   1.2800E 02   1.3000E 02   1.3200E 02   1.3400E 02
        1.3600E 02  1.3800E 02   1.4000E 02   1.4200E 02   1.4400E 02   1.4600E 02   1.4800E 02   1.5000E 02
        1.5200E 02  1.5400E 02   1.5600E 02   1.5800E 02   1.6000E 02   1.6200E 02   1.6400E 02   1.6600E 02
        1.6800E 02  1.7000E 02   2.2000E 02

   PHI  0.0         6.2830E-01   1.2566E 00   1.8849E 00   2.5132E 00   3.1416E 00

ZONE  BNDS  COMP  BND   PK   BND   PK   BND   PK   BND   PK   BND   PK   BND   PK

  1     3     1    1    2    6    3   -5    3
  2     3     2    2    3    6    3   -5    3
  3     3     3    3    4    7    5   -4    6
  4    -3     2   -3    3    7    5   -4    6
  5    -1     2   -7    3
  6    -1     2    4    3

BND    EQ  PARAMETERS...

  1     3  0.0         0.0          0.0          0.0          0.0          0.0          2.0535E 02
  2     3  0.0         0.0          0.0          0.0          0.0          0.0          4.0000E 02
  3     3  0.0         0.0          0.0          0.0          0.0          0.0          1.7253E 03
  4     6  0.0         0.0          0.0          0.0          0.0          0.0          0.0
  5     6  0.0         0.0          0.0          0.0          0.0          0.0          2.0000E 01
  6     6  0.0         0.0          0.0          0.0          0.0          0.0          2.2000E 02
  7     6  0.0         0.0          0.0          0.0          0.0          0.0          2.4000E 02
```

COMP/MAT	O	FE	PB	U
1	4.5870E-01	7.2500E-03	0.0	3.4120E 00
2	0.0	0.0	0.0	0.0
3	0.0	0.0	1.1350E 01	0.0
GRP/MAT	O	FE	PB	U

NEUTRON REMOVAL CROSS-SECTION

3.7280E-02	2.1360E-02	1.0260E-02	9.1100E-03

MATERIAL HYDROGEN DENSITY

0.0	0.0	0.0	0.0

GAMMA ATTENUATION COEFFICIENT

1	7.9130E-02	7.4730E-02	1.0944E-01	1.2988E-01	6.3000E-01
2	6.1240E-02	5.7300E-02	6.4960E-02	7.1520E-02	1.1000E 00
3	5.1070E-02	4.7890E-02	5.0650E-02	5.4160E-02	1.5500E 00
4	4.4646E-02	4.2522E-02	4.5810E-02	4.8528E-02	1.9900E 00
5	4.1232E-02	3.9968E-02	4.4332E-02	4.6918E-02	2.3800E 00
6	3.8050E-02	3.7600E-02	4.3000E-02	4.5475E-02	2.7500E 00
7	3.4650E-02	3.5250E-02	4.2075E-02	4.4375E-02	3.2500E 00
8	3.2400E-02	3.3900E-02	4.2030E-02	4.4150E-02	3.7000E 00

XNM PB D BUILDUP IS USED

GRP	EPS/E	DELTA/K	A1/B0	A2/B1	A3/B2	A4/B3
1	1.3860E 16	1.1626E-03	1.0060E 00	2.7584E-01	-1.6323E-02	5.5169E-04
2	2.5650E 15	1.8397E-03	1.0170E 00	3.5220E-01	-1.0428E-02	3.5658E-04
3	6.4300E 15	2.4135E-03	1.0167E 00	3.8151E-01	-4.6882E-03	1.6523E-04
4	1.3620E 14	2.8691E-03	1.0111E 00	3.8177E-01	4.9015E-04	3.1201E-05
5	4.1650E 14	3.2941E-03	1.0046E 00	3.6678E-01	4.4185E-03	-1.4059E-05
6	5.5040E 13	3.6476E-03	9.9875E-01	3.4475E-01	7.3978E-03	2.0866E-05
7	4.1800E 12	4.1234E-03	9.9297E-01	3.0967E-01	1.0098E-02	1.9652E-04
8	2.9520E 12	4.4810E-03	9.9063E-01	2.7804E-01	1.1151E-02	4.7617E-04
0	1.0000E-06	1.0000E-03	2.6550E-08	2.9000E-01	8.3000E-01	5.8000E-01

```
EG-

  6.3000E-01  1.1000E 00  1.5500E 00  1.9900E 00  2.3800E 00  2.7500E 00  3.2500E 00  3.7000E 00

FE ABS G-

  1.0000E 00  1.0000E 00  1.0000E 00  1.0000E 00  1.0000E 00  1.0000E 00  1.0000E 00  1.0000E 00

EN-

  1.0000E 01  8.0000E 00  6.0000E 00  5.0000E 00  4.0000E 00  3.0000E 00  2.0000E 00  1.0000E 00  6.7000E-01
  3.3000E-01

FE ABS N-

  2.2500E-15  9.2700E-16  5.4700E-16  4.6800E-16  3.8000E-16  3.0700E-16  2.1600E-16  1.0400E-16  8.3500E-17
  4.6700E-17

WIDTH T-            0.4-4.0 12.0-.10

WIDTH G-            0.4-0.9     0.9-1.35    1.35-1.8    1.8-2.2     2.2-2.6     2.6-3.0
                    3.0-3.5     3.5-4.0

WIDTH N-            12.-9.0 9.0-7.0 7.0-5.5 5.5-2.5 4.5-3.5 3.5-4.5 2.5-1.5 1.5-.83 0.83-.5
                    0.5-.10

UNIT G-             PHOTONS PER  MRADS                  SQ CM SEC    PER HR

UNIT N-                RAD       WATTS PER    PER SEC      GRAM      RAD PER SEC
```

COORDINATE TYPE 0 SOURCE INTENSITY OPTION 1

R COORDINATE

	COORDINATE	INTENSITY	COORDINATE	INTENSITY	COORDINATE	INTENSITY	COORDINATE	INTENSITY
1	7.1650E-01	1.0267E 00	2.1495E 00	3.0802E 00	3.5825E 00	5.1337E 00	5.0155E 00	7.1872E 00
5	6.4485E 00	9.2407E 00	7.8815E 00	1.1294E 01	9.3145E 00	1.3348E 01	1.0747E 01	1.5401E 01
9	1.2180E 01	1.7455E 01	1.3613E 01	1.9508E 01	0.0	0.0	-1.2763E-57	2.5098E-01

PHI COORDINATE

	COORDINATE	INTENSITY	COORDINATE	INTENSITY	COORDINATE	INTENSITY	COORDINATE	INTENSITY
1	3.1415E-01	6.2830E-01	9.4245E-01	6.2830E-01	1.5707E 00	6.2830E-01	2.1990E 00	6.2830E-01
5	2.8274E 00	6.2840E-01	0.0	0.0	-4.5908E-54	1.3586E-56	4.8302E-22	-1.0597E-58

Z COORDINATE

	COORDINATE	INTENSITY	COORDINATE	INTENSITY	COORDINATE	INTENSITY	COORDINATE	INTENSITY
1	4.5000E 01	7.7505E-04	7.1000E 01	3.1002E-05	7.3000E 01	3.1002E-05	7.5000E 01	3.1002E-05
5	7.7000E 01	3.1002E-05	7.9000E 01	3.1002E-05	8.1000E 01	3.1002E-05	8.3000E 01	3.1002E-05
9	8.5000E 01	3.1002E-05	8.7000E 01	3.1002E-05	8.9000E 01	3.1002E-05	9.1000E 01	3.1002E-05
13	9.3000E 01	3.1002E-05	9.5000E 01	3.1002E-05	9.7000E 01	3.1002E-05	9.9000E 01	3.1002E-05
17	1.0100E 02	3.1002E-05	1.0300E 02	3.1002E-05	1.0500E 02	3.1002E-05	1.0700E 02	3.1002E-05
21	1.0900E 02	3.1002E-05	1.1100E 02	3.1002E-05	1.1300E 02	3.1002E-05	1.1450E 02	1.5501E-05
25	1.1550E 02	1.5501E-05	1.1650E 02	1.5501E-05	1.1750E 02	1.5501E-05	1.1850E 02	1.5501E-05
29	1.1950E 02	1.5501E-05	1.2050E 02	1.5501E-05	1.2150E 02	1.5501E-05	1.2250E 02	1.5501E-05
33	1.2350E 02	1.5501E-05	1.2450E 02	1.5501E-05	1.2550E 02	1.5501E-05	1.2700E 02	3.1002E-05
37	1.2900E 02	3.1002E-05	1.3100E 02	3.1002E-05	1.3300E 02	3.1002E-05	1.3500E 02	3.1002E-05
41	1.3700E 02	3.1002E-05	1.3900E 02	3.1002E-05	1.4100E 02	3.1002E-05	1.4300E 02	3.1002E-05
45	1.4500E 02	3.1002E-05	1.4700E 02	3.1002E-05	1.4900E 02	3.1002E-05	1.5100E 02	3.1002E-05
49	1.5300E 02	3.1002E-05	1.5500E 02	3.1002E-05	1.5700E 02	3.1002E-05	1.5900E 02	3.1002E-05
53	1.6100E 02	3.1002E-05	1.6300E 02	3.1002E-05	1.6500E 02	3.1002E-05	1.6700E 02	3.1002E-05
57	1.6900E 02	3.1002E-05	1.9500E 02	7.7505E-04	0.0	0.0	3.7602E 09	-5.4444E-51

QAD-P5A(360) EXAMPLE PROBLEM SHIPPING CASK

RECEIVER NUMBER 1 COORDINATES - R 4.1537E 01 PHI 0.0 Z 1.2000E 02

GEOMETRY PRINT FOR PSEUDO SOURCE POINT AT THE COORDINATE ORIGIN

ZONE	BOUNDARY	DISTANCE	X	Y	Z
3	3	1.2698E 02	3.2710E-04	0.0	9.4499E-04
4	0	7.1008E-04	4.1537E 01	0.0	1.2000E 02

QAD-P5A(360) EXAMPLE PROBLEM SHIPPING CASK

RCVR 1 R= 4.1537E 01 Z= 1.2000E 02 PHI= 0.0 SOURCE POINT 1 1 1

ZONE	BOUNDARY	DISTANCE	X	Y	Z
1	1	2.8530E 01	6.8191E-01	2.2140E-01	4.5001E 01
2	2	1.1854E 01	1.4330E 01	1.4744E-01	7.0055E 01
3	3	4.5022E 01	2.0000E 01	1.1671E-01	8.0464E 01
4	0	4.8120E-04	4.1537E 01	-1.2517E-06	1.2000E 02

RCVR 1 R= 4.1537E 01 Z= 1.2000E 02 PHI= 0.0 SOURCE POINT 3 34 1

ZONE	BOUNDARY	DISTANCE	X	Y	Z
1	1	1.0981E 01	3.4082E 00	1.1070E 00	1.2450E 02
2	2	5.7238E 00	1.4309E 01	7.9050E-01	1.2321E 02
3	3	2.1705E 01	1.9991E 01	6.2554E-01	1.2254E 02
4	0	2.3706E-04	4.1538E 01	-2.2233E-05	1.2000E 02

QAD-P5A(360) EXAMPLE PROBLEM SHIPPING CASK

RECEIVER NUMBER 1 COORDINATES - R 4.1537E 01 PHI 0.0 Z 1.2000E 02

GRP NO	MEAN ENERGY MEV	ENERGY GROUP LIMITS MEV	DIRECT BEAM FLUX PHOTONS PER SQ CM SEC	MEAN BUILDUP FACTORS	DOSE RATE MRADS PER HR DIRECT BEAM	DOSE RATE MRADS PER HR WITH BUILDUP	HEATING RATES IN IRON DIRECT BEAM	HEATING RATES IN IRON WITH BUILDUP
TOTAL	1.8501	0.4-4.0	3.5118E 04	6.0835E 00	9.5795E 01	5.8277E 02	3.5118E 04	2.1269E 05
W/BU	1.8618							
1	0.6300	0.4-0.9	5.9018E-03	8.6893E 00	6.8614E-06	5.9621E-05	5.9018E-03	5.1282E-02
2	1.1000	0.9-1.35	1.6925E 02	5.9861E 00	3.1138E-01	1.8639E 00	1.6925E 02	1.0132E 03
3	1.5500	1.35-1.8	2.2404E 04	5.9415E 00	5.4072E 01	3.2127E 02	2.2404E 04	1.3311E 05
4	1.9900	1.8-2.2	1.8656E 03	6.0879E 00	5.3525E 00	3.2586E 01	1.8656E 03	1.1357E 04
5	2.3800	2.2-2.6	8.7035E 03	6.2733E 00	2.8670E 01	1.7986E 02	8.7035E 03	5.4599E 04
6	2.7500	2.6-3.0	1.6867E 03	6.3451E 00	6.1525E 00	3.9038E 01	1.6867E 03	1.0702E 04
7	3.2500	3.0-3.5	1.6806E 02	6.4893E 00	6.9297E-01	4.4969E 00	1.6806E 02	1.0906E 03
8	3.7000	3.5-4.0	1.2132E 02	6.7389E 00	5.4363E-01	3.6635E 00	1.2132E 02	8.1756E 02

QAD-P5A(360) EXAMPLE PROBLEM SHIPPING CASK Z 1.2000E 02

RECEIVER NUMBER 2 COORDINATES - R 5.0000E 01 PHI 0.0

GEOMETRY PRINT FOR PSEUDO SOURCE POINT AT THE COORDINATE ORIGIN

ZONE	BOUNDARY	DISTANCE	X	Y	Z
3	3	1.0800E 02	3.8462E-04	0.0	9.2308E-04
4	0	2.2005E 01	4.1537E 01	0.0	9.9689E 01

QAD-P5A(360) EXAMPLE PROBLEM SHIPPING CASK

RCVR 2 R= 5.0000E 01 Z= 1.2000E 02 PHI= 0.0 SOURCE POINT 1 1 1

ZONE	BOUNDARY	DISTANCE	X	Y	Z
1	1	2.4840E 01	6.8198E-01	2.2140E-01	4.5001E 01
2	2	1.0321E 01	1.4330E 01	1.6013E-01	6.5755E 01
3	3	3.9199E 01	2.0000E 01	1.3468E-01	7.4378E 01
4	0	1.5404E 01	4.1537E 01	3.7991E-02	1.0713E 02

RCVR 2 R= 5.0000E 01 Z= 1.2000E 02 PHI= 0.0 SOURCE POINT 3 34 1

ZONE	BOUNDARY	DISTANCE	X	Y	Z
1	1	1.0952E 01	3.4082E 00	1.1070E 00	1.2450E 02
2	2	5.7104E 00	1.4306E 01	8.4807E-01	1.2345E 02
3	3	2.1655E 01	1.9988E 01	7.1306E-01	1.2290E 02
4	0	8.5055E 00	4.1537E 01	2.0107E-01	1.2082E 02

QAD-P5A(360) EXAMPLE PROBLEM SHIPPING CASK

RECEIVER NUMBER 2 COORDINATES - R 5.0000E 01 PHI 0.0 Z 1.2000E 02

GRP NO	MEAN ENERGY MEV	ENERGY GROUP LIMITS MEV	DIRECT BEAM FLUX PHOTONS PER SQ CM SEC	MEAN BUILDUP FACTORS	DOSE RATE DIRECT BEAM MRADS PER HR	DOSE RATE WITH BUILDUP	HEATING RATES IN IRON DIRECT BEAM	HEATING RATES IN IRON WITH BUILDUP
TOTAL	1.8499	0.4-4.0	2.9113E 04	6.0798E 00	7.9407E 01	4.8278E 02	2.9113E 04	1.7622E 05
W/BU	1.8615							
1	0.6300	0.4-0.9	5.0008E-03	8.6504E 00	5.8140E-06	5.0293E-05	5.0008E-03	4.3259E-02
2	1.1000	0.9-1.35	1.4082E 02	5.9806E 00	2.5907E-01	1.5494E 00	1.4082E 02	8.4220E 02
3	1.5500	1.35-1.8	1.8580E 04	5.9376E 00	4.4844E 01	2.6626E 02	1.8580E 04	1.1032E 05
4	1.9900	1.8-2.2	1.5459E 03	6.0845E 00	4.4353E 00	2.6986E 01	1.5459E 03	9.4059E 03
5	2.3800	2.2-2.6	7.2096E 03	6.2704E 00	2.3749E 01	1.4892E 02	7.2096E 03	4.5207E 04
6	2.7500	2.6-3.0	1.3970E 03	6.3410E 00	5.0956E 00	3.2311E 01	1.3970E 03	8.8582E 03
7	3.2500	3.0-3.5	1.3917E 02	6.4846E 00	5.7386E-01	3.7212E 00	1.3917E 02	9.0247E 02
8	3.7000	3.5-4.0	1.0046E 02	6.7332E 00	4.5018E-01	3.0311E 00	1.0046E 02	6.7644E 02

CODED BY _____ DATE _____ REQUEST NO. _____

FORTRAN

PROBLEM _____ PROGRAM _____ PAGE _____ OF _____

STATEMENT TYPE | NUMBER | CONT

QAD-GEOM(360) EXAMPLE INPUT - SHIPPING CASK

FORTRAN STATEMENT	IDENTIFICATION
QAD-GEØM(360) EXAMPLE PRØBLEM, SHIPPING CASK	CARD A
10 58 5 4 2 1 8 1 0 1 150 149	0CARD B
2 MALE	A
XZØNE B -60.000, 60.000	B
YZØNE B -60.000, 60.000	C
ZZØNE B -120.000, 120.000	D
ZØNE 1 1 1	E
-60.000, 60.000	F
-60.000, 60.000	G
-120.000, -100.000, 100.000, 120.000	H
BLØCK 1 1 1	J1
MEDIA 0, 2	K1
SURFACES 3	L1
SECTØR 1	M11
SECTØR -1	M12
BLØCK 1 1 2	J2
MEDIA 0, 2, 1000, 1	K2
SURFACES 3, 2, 1	L2
SECTØR 1 0 0	M21
SECTØR -1 1 0	M22

CODED BY _____ DATE _____ REQUEST NO. _____

FORTRAN

PROBLEM _____ PROGRAM _____ PAGE _____ OF _____

QAD-GEOM (360) EXAMPLE INPUT – SHIPPING CASK

STATEMENT TYPE	NUMBER	CONT	FORTRAN STATEMENT	IDENTIFICATION
			SECTØR 0 -1 1	M23
			SECTØR 0 0 -1	M24
			BLØCK 1 1 3	J3
			MEDIA 0, 2	K3
			SURFACES 3	L3
			SECTØR 1	M31
			SECTØR -1	M32
			3 QUADRIC SURFACES	Q
			1.XSQ 1.YSQ -205.35 $	R1
			1.XSQ 1.YSQ -400.00 $	R2
			1.XSQ 1.YSQ -1725.32 $	R3
			1.0 0.0 0.0 0.0 0.0 0.0 0.0 0.0	CARD C
			0.0 1.433 2.866 4.299 5.732 7.165 8.598 10.031	CARD D1
			11.464 12.897 14.33	CARD D2
			-100.0 -50.0 -48.0 -46.0 -44.0 -42.0 -40.0 -38.0	CARD E1
			-36.0 -34.0 -32.0 -30.0 -28.0 -26.0 -24.0 -22.0	CARD E2
			-20.0 -18.0 -16.0 -14.0 -12.0 -10.0 -8.0 -6.0	CARD E3
			-5.0 -4.0 -3.0 -2.0 -1.0 0.0 1.0 2.0	CARD E4
			3.0 4.0 5.0 6.0 8.0 10.0 12.0 14.0	CARD E5
			16.0 18.0 20.0 22.0 24.0 26.0 28.0 30.0	CARD E6

CODED BY _____ DATE _____ REQUEST NO. _____

FORTRAN

PROBLEM _____ PROGRAM _____ PAGE _____ OF _____

QAD-GEOM(360) EXAMPLE INPUT - SHIPPING CASK

STATEMENT TYPE	NUMBER	CONT	FORTRAN STATEMENT	IDENTIFICATION
			32.0 34.0 36.0 38 0 40.0 42.0 44.0 46.0	CARD E7
			48.0 50.0 100.0	CARD E8
			0.0 .6283 1.2566 1.8849 2.5132 3.1416	CARD F
			4 8 26 82 92	CARD M
			0.4587 .00725 0.0 3.412	CARD N1
			0.0 0.0 11.35 0.0	CARD N2
			0.630 1.100 1.550 1.990 2.380 2.750 3.250 3.700	CARD O
			1.386E+16 2.565E+15 6.430E+15 1.362E+14 4.165E+14 5.504E+13 4.180E+12 2.952E+12	CARD P
			1.1626E-3 1.8397E-3 2.4135E-3 2.8691E-3 3.2941E-3 3.6476E-3 4.1234E-3 4.4810E-3	CARD Q
			1.0 1.0 1.0 1.0 1.0 1.0 1.0 1.0	CARD R
			0.4-4.0	CARD S
			0.4-0.9 0.9-1.35 1.35-1.8 1.8-2.2 2.2-2.6 2.6-3.0	CARD T1
			3.0-3.5 3.5-4.0	CARD T2
			PHØTØNS PER SQ CM SEC MRAD PER HR	CARD U
			41.537 0.0 0.0	CARD X1
			101.54 0.0 0.0	CARD X2
			-1	CARD Y

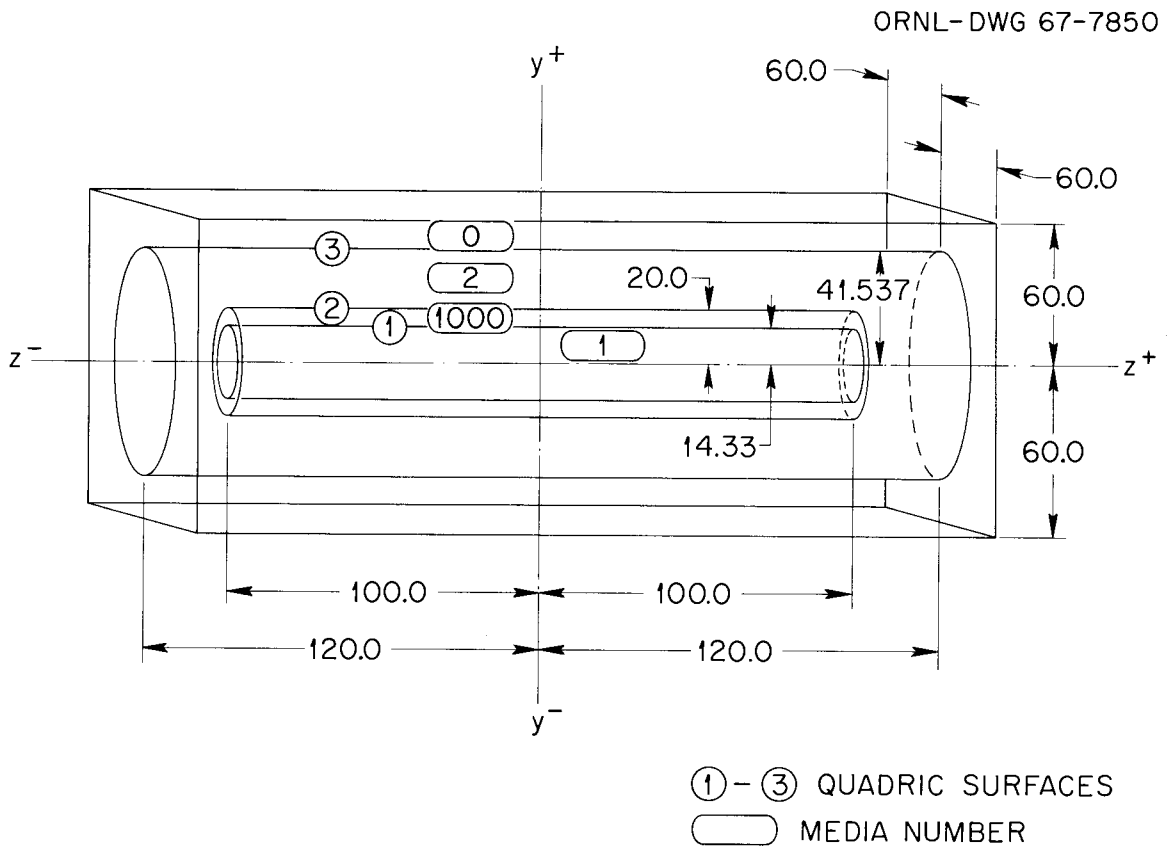

Fig. A2. Geometry for QAD-GEOM(360) Example Problem.

```
     QAD-GEOM(360) EXAMPLE PROBLEM   SHIPPING CASK

    CONTROL    10    58     5     4     2     1     8     0     0     0     1     0     1   150   149     0
                            0    -9     1    10     0     0     0     0     0     0     0     0     0     0

   2     MALE
XZONE B     -0.60000D 02,  0.60000D 02
YZONE B     -0.60000D 02,  0.60000D 02
ZZONE B     -0.12000D 03,  0.12000D 03

ZONE      1    1    1
            -0.60000D 02,  0.60000D 02
            -0.60000D 02,  0.60000D 02
            -0.12000D 03, -0.10000D 03,  0.10000D 03,  0.12000D 03

BLOCK     1    1    1
MEDIA           0,    2
SURFACES        3
SECTOR  1
SECTOR -1

BLOCK     1    1    2
MEDIA           0,    2, 1000,    1
SURFACES        3,    2,    1
SECTOR  1  0  0
SECTOR -1  1  0
SECTOR  0 -1  1
SECTOR  0  0 -1

BLOCK     1    1    3
MEDIA           0,    2
SURFACES        3
SECTOR  1
SECTOR -1

    3 QUADRIC   SURFACES
  0.10000D 01XSQ     0.10000D 01YSQ    -0.20535D 03     $
  0.10000D 01XSQ     0.10000D 01YSQ    -0.40000D 03     $
  0.10000D 01XSQ     0.10000D 01YSQ    -0.17253D 04     $

     SOURCE  1.0000E 00  0.0         0.0         0.0         0.0         0.0         0.0

          R  0.0         1.4330E 00  2.8660E 00  4.2990E 00  5.7320E 00  7.1650E 00  8.5980E 00  1.0031E 01
             1.1464E 01  1.2897E 01  1.4330E 01

          Z -1.0000E 02 -5.0000E 01 -4.8000E 01 -4.6000E 01 -4.4000E 01 -4.2000E 01 -4.0000E 01 -3.8000E 01
            -3.6000E 01 -3.4000E 01 -3.2000E 01 -3.0000E 01 -2.8000E 01 -2.6000E 01 -2.4000E 01 -2.2000E 01
            -2.0000E 01 -1.8000E 01 -1.6000E 01 -1.4000E 01 -1.2000E 01 -1.0000E 01 -8.0000E 00 -6.0000E 00
            -5.0000E 00 -4.0000E 00 -3.0000E 00 -2.0000E 00 -1.0000E 00  0.0         1.0000E 00  2.0000E 00
             3.0000E 00  4.0000E 00  5.0000E 00  6.0000E 00  8.0000E 00  1.0000E 01  1.2000E 01  1.4000E 01
             1.6000E 01  1.8000E 01  2.0000E 01  2.2000E 01  2.4000E 01  2.6000E 01  2.8000E 01  3.0000E 01
             3.2000E 01  3.4000E 01  3.6000E 01  3.8000E 01  4.0000E 01  4.2000E 01  4.4000E 01  4.6000E 01
             4.8000E 01  5.0000E 01  1.0000E 02

        PHI  0.0         6.2830E-01  1.2566E 00  1.8849E 00  2.5132E 00  3.1416E 00
```

COMP/MAT	O	FE	PB	U
1	4.5870E-01	7.2500E-03	0.0	3.4120E 00
2	0.0	0.0	1.1350E 01	0.0
GRP/MAT	O	FE	PB	U

NEUTRON REMOVAL CROSS-SECTION

3.7280E-02	2.1360E-02	1.0260E-02	9.1100E-03

MATERIAL HYDROGEN DENSITY

0.0	0.0	0.0	0.0

GAMMA ATTENUATION COEFFICIENT

1	7.9130E-02	7.4730E-02	1.0944E-01	1.2988E-01	6.3000E-01
2	6.1240E-02	5.7300E-02	6.4960E-02	7.1520E-02	1.1000E 00
3	5.1070E-02	4.7890E-02	5.0650E-02	5.4160E-02	1.5500E 00
4	4.4646E-02	4.2522E-02	4.5810E-02	4.8528E-02	1.9900E 00
5	4.1232E-02	3.9968E-02	4.4332E-02	4.6918E-02	2.3800E 00
6	3.8050E-02	3.7600E-02	4.3000E-02	4.5475E-02	2.7500E 00
7	3.4650E-02	3.5250E-02	4.2075E-02	4.4375E-02	3.2500E 00
8	3.2400E-02	3.3900E-02	4.2030E-02	4.4150E-02	3.7000E 00

XNM PB D BUILDUP IS USED

GRP	EPS/E	DELTA/K	A1/B0	A2/B1	A3/B2	A4/B3
1	1.3860E 16	1.1626E-03	1.0060E 00	2.7584E-01	-1.6323E-02	5.5169E-04
2	2.5650E 15	1.8397E-03	1.0170E 00	3.5220E-01	-1.0428E-02	3.5658E-04
3	6.4300E 15	2.4135E-03	1.0167E 00	3.8151E-01	-4.6882E-03	1.6523E-04
4	1.3620E 14	2.8691E-03	1.0111E 00	3.8177E-01	4.9015E-04	3.1201E-05
5	4.1650E 14	3.2941E-03	1.0046E 00	3.6678E-01	4.4185E-03	-1.4059E-05
6	5.5040E 13	3.6476E-03	9.9875E-01	3.4475E-01	7.3978E-03	2.0866E-05
7	4.1800E 12	4.1234E-03	9.9297E-01	3.0967E-01	1.0098E-02	1.9652E-04
8	2.9520E 12	4.4810E-03	9.9063E-01	2.7804E-01	1.1151E-02	4.7617E-04

ALBERT-WELTON COEFFICIENTS

2.6550E-08	2.9000E-01	8.3000E-01	5.8000E-01

EG-

6.3000E-01 1.1000E 00 1.5500E 00 1.9900E 00 2.3800E 00 2.7500E 00 3.2500E 00 3.7000E 00

FE ABS G-

1.0000E 00 1.0000E 00 1.0000E 00 1.0000E 00 1.0000E 00 1.0000E 00 1.0000E 00 1.0000E 00

EN-

1.0000E 01 8.0000E 00 6.0000E 00 5.0000E 00 4.0000E 00 3.0000E 00 2.0000E 00 1.0000E 00 6.7000E-01
3.3000E-01

FE ABS N-

2.2500E-15 9.2700E-16 5.4700E-16 4.6800E-16 3.8000E-16 3.0700E-16 2.1600E-16 1.0400E-16 8.3500E-17
4.6700E-17

WIDTH T- 0.4-4.012.0-.10

WIDTH G- 0.4-0.9 0.9-1.35 1.35-1.8 1.8-2.2 2.2-2.6 2.6-3.0
3.0-3.5 3.5-4.0

WIDTH N- 12.-9.0 9.0-7.0 7.0-5.5 5.5-4.5 4.5-3.5 3.5-2.5 2.5-1.5 1.5-.83 0.83-.5
0.5-.10

UNIT G- PHOTONS PER MRADS SQ CM SEC PER HR

UNIT N- RAD WATTS PER PER SEC GRAM RAD PER SEC

COORDINATE TYPE 0 SOURCE INTENSITY OPTION 1

R COORDINATE

	COORDINATE	INTENSITY	COORDINATE	INTENSITY	COORDINATE	INTENSITY	COORDINATE	INTENSITY
1	7.1650E-01	1.0267E 00	2.1495E 00	3.0802E 00	3.5825E 00	5.1337E 00	5.0155E 00	7.1872E 00
5	6.4485E 00	9.2407E 00	7.8815E 00	1.1294E 01	9.3145E 00	1.3348E 01	1.0747E 01	1.5401E 01
9	1.2180E 01	1.7455E 01	1.3613E 01	1.9508E 01	0.0	0.0	-6.4880E-55	1.6982E 36

PHI COORDINATE

	COORDINATE	INTENSITY	COORDINATE	INTENSITY	COORDINATE	INTENSITY	COORDINATE	INTENSITY
1	3.1415E-01	6.2830E-01	9.4245E-01	6.2830E-01	1.5707E 00	6.2830E-01	2.1990E 00	6.2830E-01
5	2.8274E 00	6.2840E-01	0.0	0.0	-8.1522E-59	1.6825E 08	1.3483E 08	-1.8546E-67

Z COORDINATE

	COORDINATE	INTENSITY	COORDINATE	INTENSITY	COORDINATE	INTENSITY	COORDINATE	INTENSITY
1	-7.5000E 01	7.7505E-04	-4.9000E 01	3.1002E-05	-4.7000E 01	3.1002E-05	-4.5000E 01	3.1002E-05
5	-4.3000E 01	3.1002E-05	-4.1000E 01	3.1002E-05	-3.9000E 01	3.1002E-05	-3.7000E 01	3.1002E-05
9	-3.5000E 01	3.1002E-05	-3.3000E 01	3.1002E-05	-3.1000E 01	3.1002E-05	-2.9000E 01	3.1002E-05
13	-2.7000E 01	3.1002E-05	-2.5000E 01	3.1002E-05	-2.3000E 01	3.1002E-05	-2.1000E 01	3.1002E-05
17	-1.9000E 01	3.1002E-05	-1.7000E 01	3.1002E-05	-1.5000E 01	3.1002E-05	-1.3000E 01	3.1002E-05
21	-1.1000E 01	3.1002E-05	-9.0000E 00	3.1002E-05	-7.0000E 00	3.1002E-05	-5.5000E 00	1.5501E-05
25	-4.5000E 00	1.5501E-05	-3.5000E 00	1.5501E-05	-2.5000E 00	1.5501E-05	-1.5000E 00	1.5501E-05
29	-5.0000E-01	1.5501E-05	5.0000E-01	1.5501E-05	1.5000E 00	1.5501E-05	2.5000E 00	1.5501E-05
33	3.5000E 00	1.5501E-05	4.5000E 00	1.5501E-05	5.5000E 00	1.5501E-05	7.0000E 00	3.1002E-05
37	9.0000E 00	3.1002E-05	1.1000E 01	3.1002E-05	1.3000E 01	3.1002E-05	1.5000E 01	3.1002E-05
41	1.7000E 01	3.1002E-05	1.9000E 01	3.1002E-05	2.1000E 01	3.1002E-05	2.3000E 01	3.1002E-05
45	2.5000E 01	3.1002E-05	2.7000E 01	3.1002E-05	2.9000E 01	3.1002E-05	3.1000E 01	3.1002E-05
49	3.3000E 01	3.1002E-05	3.5000E 01	3.1002E-05	3.7000E 01	3.1002E-05	3.9000E 01	3.1002E-05
53	4.1000E 01	3.1002E-05	4.3000E 01	3.1002E-05	4.5000E 01	3.1002E-05	4.7000E 01	3.1002E-05
57	4.9000E 01	3.1002E-05	7.5000E 01	7.7505E-04	0.0	0.0	-1.8886E-01	-1.6621E-02

QAD-GEOM(360) EXAMPLE PROBLEM SHIPPING CASK

RECEIVER NUMBER 1 COORDINATES - R 4.1537E 01 PHI 0.0 Z 0.0

GEOMETRY PRINT FOR PSEUDO SOURCE POINT AT THE COORDINATE ORIGIN

ZONE	BOUNDARY	DISTANCE	X	Y	Z
1		1.4330D 01	0.0	0.0	0.0
1000		5.6700D 00	1.4330D 01	0.0	0.0
2		2.1537D 01	2.0000D 01	0.0	0.0

QAD-GEOM(360) EXAMPLE PROBLEM SHIPPING CASK

RCVR 1 R= 4.1537E 01 Z= 0.0 PHI= 0.0 SOURCE POINT 1 1 1

ZONE	BOUNDARY	DISTANCE	X	Y	Z
1		2.8530D 01	6.8143D-01	2.2140D-01	-7.5000D 01
1000		1.1854D 01	1.4329D 01	1.4744D-01	-4.9946D 01
2		4.5023D 01	2.0000D 01	1.1671D-01	-3.9537D 01

RCVR 1 R= 4.1537E 01 Z= 0.0 PHI= 0.0 SOURCE POINT 3 34 1

ZONE	BOUNDARY	DISTANCE	X	Y	Z
1		1.0981D 01	3.4072D 00	1.1070D 00	4.5000D 00
1000		5.7238D 00	1.4308D 01	7.9053D-01	3.2135D 00
2		2.1705D 01	1.9990D 01	6.2557D-01	2.5429D 00

QAD-GEOM(360) EXAMPLE PROBLEM SHIPPING CASK

RECEIVER NUMBER 1 COORDINATES - R 4.1537E 01 PHI 0.0 Z 0.0

GRP NO	MEAN ENERGY MEV	ENERGY GROUP LIMITS MEV	DIRECT BEAM FLUX PHOTONS PER SQ CM SEC	MEAN BUILDUP FACTORS	DOSE RATE DIRECT BEAM MRADS PER HR	DOSE RATE WITH BUILDUP	HEATING RATES IN IRON DIRECT BEAM	HEATING RATES IN IRON WITH BUILDUP
TOTAL	1.8501	0.4-4.0	3.5114E 04	6.0836E 00	9.5782E 01	5.8270E 02	3.5114E 04	2.1267E 05
W/BU	1.8618							
1	0.6300	0.4-0.9	5.9001E-03	8.6895E 00	6.8594E-06	5.9605E-05	5.9001E-03	5.1269E-02
2	1.1000	0.9-1.35	1.6922E 02	5.9861E 00	3.1132E-01	1.8636E 00	1.6922E 02	1.0130E 03
3	1.5500	1.35-1.8	2.2401E 04	5.9415E 00	5.4064E 01	3.2122E 02	2.2401E 04	1.3309E 05
4	1.9900	1.8-2.2	1.8654E 03	6.0879E 00	5.3519E 00	3.2582E 01	1.8654E 03	1.1356E 04
5	2.3800	2.2-2.6	8.7024E 03	6.2733E 00	2.8667E 01	1.7984E 02	8.7024E 03	5.4593E 04
6	2.7500	2.6-3.0	1.6865E 03	6.3451E 00	6.1517E 00	3.9033E 01	1.6865E 03	1.0701E 04
7	3.2500	3.0-3.5	1.6804E 02	6.4894E 00	6.9289E-01	4.4964E 00	1.6804E 02	1.0905E 03
8	3.7000	3.5-4.0	1.2130E 02	6.7389E 00	5.4357E-01	3.6631E 00	1.2130E 02	8.1746E 02

QAD-GEOM(360) EXAMPLE PROBLEM SHIPPING CASK

RECEIVER NUMBER 2 COORDINATES - R 1.0154E 02 PHI 0.0 Z 0.0

GEOMETRY PRINT FOR PSEUDO SOURCE POINT AT THE COORDINATE ORIGIN

ZONE	BOUNDARY	DISTANCE	X	Y	Z
1		1.4330D 01	0.0	0.0	0.0
1000		5.6700D 00	1.4330D 01	0.0	0.0
2		2.1537D 01	2.0000D 01	0.0	0.0

QAD-GEOM(360) EXAMPLE PROBLEM SHIPPING CASK

RCVR 2 R= 1.0154E 02 Z= 0.0 PHI= 0.0 SOURCE POINT 1 1 1

ZONE	BOUNDARY	DISTANCE	X	Y	Z
1		1.7007D 01	6.8143D-01	2.2140D-01	-7.5000D 01
1000		7.0664D 00	1.4329D 01	1.9145D-01	-6.4852D 01
2		2.6840D 01	1.9999D 01	1.7900D-01	-6.0635D 01

RCVR 2 R= 1.0154E 02 Z= 0.0 PHI= 0.0 SOURCE POINT 3 34 1

ZONE	BOUNDARY	DISTANCE	X	Y	Z
1		1.0901D 01	3.4072D 00	1.1070D 00	4.5000D 00
1000		5.6890D 00	1.4296D 01	9.8418D-01	4.0007D 00
2		2.1577D 01	1.9979D 01	9.2008D-01	3.7401D 00

QAD-GEOM(360) EXAMPLE PROBLEM SHIPPING CASK

RECEIVER NUMBER 2 COORDINATES - R 1.0154E 02 PHI 0.0 Z 0.0

GRP NO	MEAN ENERGY MEV	ENERGY GROUP LIMITS MEV	DIRECT BEAM FLUX PHOTONS PER SQ CM SEC	MEAN BUILDUP FACTORS	DOSE RATE DIRECT BEAM MRADS PER HR	DOSE RATE WITH BUILDUP	HEATING RATES IN IRON DIRECT BEAM	HEATING RATES IN IRON WITH BUILDUP
TOTAL	1.8490	0.4-4.0	1.3892E 04	6.0675E 00	3.7877E 01	2.2982E 02	1.3892E 04	8.3921E 04
W/BU	1.8604							
1	0.6300	0.4-0.9	2.5087E-03	8.5799E 00	2.9166E-06	2.5024E-05	2.5087E-03	2.1524E-02
2	1.1000	0.9-1.35	6.8074E 01	5.9625E 00	1.2524E-01	7.4671E-01	6.8074E 01	4.0589E 02
3	1.5500	1.35-1.8	8.8784E 03	5.9290E 00	2.1428E 01	1.2705E 02	8.8784E 03	5.2640E 04
4	1.9900	1.8-2.2	7.3606E 02	6.0719E 00	2.1118E 00	1.2823E 01	7.3606E 02	4.4692E 03
5	2.3800	2.2-2.6	3.4318E 03	6.2523E 00	1.1305E 01	7.0679E 01	3.4318E 03	2.1456E 04
6	2.7500	2.6-3.0	6.6386E 02	6.3289E 00	2.4215E 00	1.5325E 01	6.6386E 02	4.2015E 03
7	3.2500	3.0-3.5	6.6100E 01	6.4677E 00	2.7256E-01	1.7628E 00	6.6100E 01	4.2751E 02
8	3.7000	3.5-4.0	4.7711E 01	6.7145E 00	2.1379E-01	1.4355E 00	4.7711E 01	3.2035E 02

CODED BY _____
DATE _____ REQUEST NO. _____

FORTRAN

PROBLEM _____
PROGRAM _____
PAGE _____ OF _____

STATEMENT | TYPE | NUMBER | CONT | FORTRAN STATEMENT | IDENTIFICATION

QAD-GEOM(360)-CYLINDRICAL EXAMPLE INPUT - SHIPPING CASK

```
QAD-GEØM(360)-CYLINDRICAL EXAMPLE PRØBLEM   SHIPPING CASK                CARD A
  10  58   5   4   2   1   8   0             1   0   1  150  149   0 CARD B
   2     MALE
     14.33
     20.00
    41.537
   100.000
  (BLANK CARD)
   100.000   0    0    0    0
   120.000   2    2    2    0
   320.000   1 1000    2    0
   340.000   2    2    2    0
   440.000   0    0    0    0
  (BLANK CARD)
1.0      0.0      0.0      0.0      0.0      0.0      0.0                CARD C
0.0      1.433    2.866    4.299    5.732    7.165    8.598   10.031     CARD D1
11.464   12.897   14.33                                                   CARD D2
170.0    170.0    172.0    174.0    176.0    178.0    180.0   182.0      CARD E1
184.0    186.0    188.0    190.0    192.0    194.0    196.0   198.0      CARD E2
200.0    202.0    204.0    206.0    208.0    210.0    212.0   214.0      CARD E3
```

CODED BY _____ DATE _____ REQUEST NO. _____

FORTRAN

PROBLEM _____ PROGRAM _____ PAGE _____ OF _____

QAD-GEOM (360) - CYLINDRICAL EXAMPLE INPUT - SHIPPING CASK

STATEMENT TYPE	STATEMENT NUMBER	CONT	FORTRAN STATEMENT	IDENTIFICATION
			215.0 216.0 217.0 218.0 219.0 220.0 221.0 222.0	CARD E4
			223.0 224.0 225.0 226.0 228.0 230.0 232.0 234.0	CARD E5
			236.0 238.0 240.0 242.0 244.0 246.0 248.0 250.0	CARD E6
			252.0 254.0 256.0 258.0 260.0 262.0 264.0 266.0	CARD E7
			268.0 270.0 320.0	CARD E8
			0.0 .62830 1.2566 1.8849 2.5132 3.1416	CARD F
			4 8 26 82 92	CARD M
			0.4587 .00725 0.0 3.412	CARD N1
			0.0 0.0 11.35 0.0	CARD N2
			0.630 1.100 1.550 1.990 2.380 2.750 3.250 3.700	CARD O
			1.386E+16 2.565E+15 6.430E+15 1.362E+14 4.165E+14 5.504E+13 4.180E+12 2.952E+12	CARD P
			1.1626E-3 1.8397E-3 2.4135E-3 2.8691E-3 3.2941E-3 3.6476E-3 4.1234E-3 4.4810E-3	CARD Q
			1.0 1.0 1.0 1.0 1.0 1.0 1.0 1.0	CARD R
			0.4-4.0	CARD S
			0.4-0.9 0.9-1.35 1.35-1.8 1.8-2.2 2.2-2.6 2.6-3.0	CARD T1
			3.0-3.5 3.5-4.0	CARD T2
			PHOTONS PER SQ CM SEC MRAD PER HR	CARD U
			41.537 220.0 0.0	CARD X1
			50.000 220.0 0.0	CARD X2
			-1	CARD Y

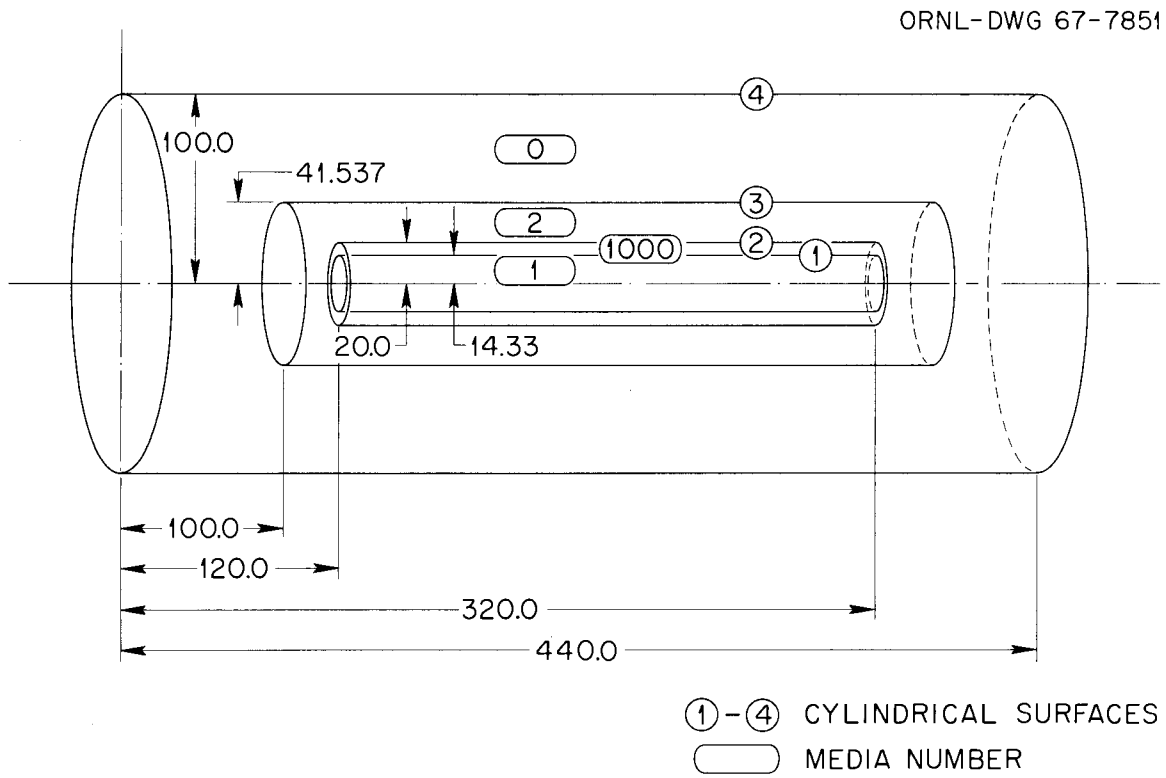

Fig. A3. Geometry for QAD-GEOM(360) Cylindrical Example Problem.

QAD-GEOM(360)-CYLINDRICAL EXAMPLE PROBLEM SHIPPING CASK

CONTROL	10	58	5	4	2	1	8	0	0	0	1	0	1	150	149	0
			0	-9	1	10	0	0	0	0	0	0	0	0	0	0

CYLINDRICAL GEOM

2 MALE

RADII

0.14330D 02

0.20000D 02

0.41537D 02

0.10000D 03

MEDIA

HEIGHT	RADIUS 1	RADIUS 2	RADIUS 3	RADIUS 4	RADIUS 5	RADIUS 6	RADIUS 7	RADIUS 8	RADIUS 9	RADIUS 10
0.1000D 03	0	0	0	0						
0.1200D 03	2	2	2	0						
0.3200D 03	1	1000	2	0						
0.3400D 03	2	2	2	0						
0.4400D 03	0	0	0	0						

SOURCE	1.0000E 00	0.0	0.0	0.0	0.0	0.0	0.0	
R	0.0	1.4330E 00	2.8660E 00	4.2990E 00	5.7320E 00	7.1650E 00	8.5980E 00	1.0031E 01
	1.1464E 01	1.2897E 01	1.4330E 01					
Z	1.2000E 02	1.7000E 02	1.7200E 02	1.7400E 02	1.7600E 02	1.7800E 02	1.8000E 02	1.8200E 02
	1.8400E 02	1.8600E 02	1.8800E 02	1.9000E 02	1.9200E 02	1.9400E 02	1.9600E 02	1.9800E 02
	2.0000E 02	2.0200E 02	2.0400E 02	2.0600E 02	2.0800E 02	2.1000E 02	2.1200E 02	2.1400E 02
	2.1500E 02	2.1600E 02	2.1700E 02	2.1800E 02	2.1900E 02	2.2000E 02	2.2100E 02	2.2200E 02
	2.2300E 02	2.2400E 02	2.2500E 02	2.2600E 02	2.2800E 02	2.3000E 02	2.3200E 02	2.3400E 02
	2.3600E 02	2.3800E 02	2.4000E 02	2.4200E 02	2.4400E 02	2.4600E 02	2.4800E 02	2.5000E 02
	2.5200E 02	2.5400E 02	2.5600E 02	2.5800E 02	2.6000E 02	2.6200E 02	2.6400E 02	2.6600E 02
	2.6800E 02	2.7000E 02	3.2000E 02					
PHI	0.0	6.2830E-01	1.2566E 00	1.8849E 00	2.5132E 00	3.1416E 00		

COMP/MAT	O	FE	PB	U
1	4.5870E-01	7.2500E-03	0.0	3.4120E 00
2	0.0	0.0	1.1350E 01	0.0
GRP/MAT	O	FE	PB	U

NEUTRON REMOVAL CROSS-SECTION

3.7280E-02	2.1360E-02	1.0260E-02	9.1100E-03

MATERIAL HYDROGEN DENSITY

0.0	0.0	0.0	0.0

GAMMA ATTENUATION COEFFICIENT

1	7.9130E-02	7.4730E-02	1.0944E-01	1.2988E-01	6.3000E-01
2	6.1240E-02	5.7300E-02	6.4960E-02	7.1520E-02	1.1000E 00
3	5.1070E-02	4.7890E-02	5.0650E-02	5.4160E-02	1.5500E 00
4	4.4646E-02	4.2522E-02	4.5810E-02	4.8528E-02	1.9900E 00
5	4.1232E-02	3.9968E-02	4.4332E-02	4.6918E-02	2.3800E 00
6	3.8050E-02	3.7600E-02	4.3000E-02	4.5475E-02	2.7500E 00
7	3.4650E-02	3.5250E-02	4.2075E-02	4.4375E-02	3.2500E 00
8	3.2400E-02	3.3900E-02	4.2030E-02	4.4150E-02	3.7000E 00

XNM PB D BUILDUP IS USED

GRP	EPS/E	DELTA/K	A1/B0	A2/B1	A3/B2	A4/B3
1	1.3860E 16	1.1626E-03	1.0060E 00	2.7584E-01	-1.6323E-02	5.5169E-04
2	2.5650E 15	1.8397E-03	1.0170E 00	3.5220E-01	-1.0428E-02	3.5658E-04
3	6.4300E 15	2.4135E-03	1.0167E 00	3.8151E-01	-4.6882E-03	1.6523E-04
4	1.3620E 14	2.8691E-03	1.0111E 00	3.8177E-01	4.9015E-04	3.1201E-05
5	4.1650E 14	3.2941E-03	1.0046E 00	3.6678E-01	4.4185E-03	-1.4059E-05
6	5.5040E 13	3.6476E-03	9.9875E-01	3.4475E-01	7.3978E-03	2.0866E-05
7	4.1800E 12	4.1234E-03	9.9297E-01	3.0967E-01	1.0098E-02	1.9652E-04
8	2.9520E 12	4.4810E-03	9.9063E-01	2.7804E-01	1.1151E-02	4.7617E-04

ALBERT-WELTON COEFFICIENTS

2.6550E-08	2.9000E-01	8.3000E-01	5.8000E-01

EG-

6.3000E-01 1.1000E 00 1.5500E 00 1.9900E 00 2.3800E 00 2.7500E 00 3.2500E 00 3.7000E 00

FE ABS G-

1.0000E 00 1.0000E 00 1.0000E 00 1.0000E 00 1.0000E 00 1.0000E 00 1.0000E 00 1.0000E 00

EN-

1.0000E 01 8.0000E 00 6.0000E 00 5.0000E 00 4.0000E 00 3.0000E 00 2.0000E 00 1.0000E 00 6.7000E-01
3.3000E-01

FE ABS N-

2.2500E-15 9.2700E-16 5.4700E-16 4.6800E-16 3.8000E-16 3.0700E-16 2.1600E-16 1.0400E-16 8.3500E-17
4.6700E-17

WIDTH T- 0.4-4.0 12.0-.10

WIDTH G- 0.4-0.9 0.9-1.35 1.35-1.8 1.8-2.2 2.2-2.6 2.6-3.0
3.0-3.5 3.5-4.0

WIDTH N- 12.-9.0 9.0-7.0 7.0-5.5 5.5-4.5 4.5-3.5 3.5-2.5 2.5-1.5 1.5-.83 0.83-.5
0.5-.10

UNIT G- PHOTONS PER MRAD SQ CM SEC PER HR

UNIT N- RAD WATTS PER PER SEC GRAM RAD PER SEC

COORDINATE TYPE 0 SOURCE INTENSITY OPTION 1

R COORDINATE

	COORDINATE	INTENSITY	COORDINATE	INTENSITY	COORDINATE	INTENSITY	COORDINATE	INTENSITY
1	7.1650E-01	1.0267E 00	2.1495E 00	3.0802E 00	3.5825E 00	5.1337E 00	5.0155E 00	7.1872E 00
5	6.4485E 00	9.2407E 00	7.8815E 00	1.1294E 01	9.3145E 00	1.3348E 01	1.0747E 01	1.5401E 01
9	1.2180E 01	1.7455E 01	1.3613E 01	1.9508E 01	0.0	0.0	-6.4880E-55	1.6982E 36

PHI COORDINATE

	COORDINATE	INTENSITY	COORDINATE	INTENSITY	COORDINATE	INTENSITY	COORDINATE	INTENSITY
1	3.1415E-01	6.2830E-01	9.4245E-01	6.2830E-01	1.5707E 00	6.2830E-01	2.1990E 00	6.2830E-01
5	2.8274E 00	6.2840E-01	0.0	0.0	-8.1522E-59	1.6825E 08	1.3483E 08	-1.8546E-67

Z COORDINATE

	COORDINATE	INTENSITY	COORDINATE	INTENSITY	COORDINATE	INTENSITY	COORDINATE	INTENSITY
1	1.4500E 02	7.7505E-04	1.7100E 02	3.1002E-05	1.7300E 02	3.1002E-05	1.7500E 02	3.1002E-05
5	1.7700E 02	3.1002E-05	1.7900E 02	3.1002E-05	1.8100E 02	3.1002E-05	1.8300E 02	3.1002E-05
9	1.8500E 02	3.1002E-05	1.8700E 02	3.1002E-05	1.8900E 02	3.1002E-05	1.9100E 02	3.1002E-05
13	1.9300E 02	3.1002E-05	1.9500E 02	3.1002E-05	1.9700E 02	3.1002E-05	1.9900E 02	3.1002E-05
17	2.0100E 02	3.1002E-05	2.0300E 02	3.1002E-05	2.0500E 02	3.1002E-05	2.0700E 02	3.1002E-05
21	2.0900E 02	3.1002E-05	2.1100E 02	3.1002E-05	2.1300E 02	3.1002E-05	2.1450E 02	1.5501E-05
25	2.1550E 02	1.5501E-05	2.1650E 02	1.5501E-05	2.1750E 02	1.5501E-05	2.1850E 02	1.5501E-05
29	2.1950E 02	1.5501E-05	2.2050E 02	1.5501E-05	2.2150E 02	1.5501E-05	2.2250E 02	1.5501E-05
33	2.2350E 02	1.5501E-05	2.2450E 02	1.5501E-05	2.2550E 02	1.5501E-05	2.2700E 02	3.1002E-05
37	2.2900E 02	3.1002E-05	2.3100E 02	3.1002E-05	2.3300E 02	3.1002E-05	2.3500E 02	3.1002E-05
41	2.3700E 02	3.1002E-05	2.3900E 02	3.1002E-05	2.4100E 02	3.1002E-05	2.4300E 02	3.1002E-05
45	2.4500E 02	3.1002E-05	2.4700E 02	3.1002E-05	2.4900E 02	3.1002E-05	2.5100E 02	3.1002E-05
49	2.5300E 02	3.1002E-05	2.5500E 02	3.1002E-05	2.5700E 02	3.1002E-05	2.5900E 02	3.1002E-05
53	2.6100E 02	3.1002E-05	2.6300E 02	3.1002E-05	2.6500E 02	3.1002E-05	2.6700E 02	3.1002E-05
57	2.6900E 02	3.1002E-05	2.9500E 02	7.7505E-04	0.0	0.0	-1.8886E-01	-1.6621E-02

QAD-GEOM(360)-CYLINDRICAL EXAMPLE PROBLEM SHIPPING CASK

RECEIVER NUMBER 1 COORDINATES - R 4.1537E 01 PHI 0.0 Z 2.2000E 02

GEOMETRY PRINT FOR PSEUDO SOURCE POINT AT THE COORDINATE ORIGIN

ZONE	BOUNDARY	DISTANCE	X	Y	Z
0		1.0177D 02	0.0	0.0	0.0
2		1.2212D 02	1.8880D 01	0.0	1.0000D 02

QAD-GEOM(360)-CYLINDRICAL EXAMPLE PROBLEM SHIPPING CASK

RCVR 1 R= 4.1537E 01 Z= 2.2000E 02 PHI= 0.0 SOURCE POINT 1 1 1

ZONE	BOUNDARY	DISTANCE	X	Y	Z
1		2.8530D 01	6.8143D-01	2.2140D-01	1.4500D 02
1000		1.1854D 01	1.4329D 01	1.4744D-01	1.7005D 02
2		4.5023D 01	2.0000D 01	1.1671D-01	1.8046D 02

RCVR 1 R= 4.1537E 01 Z= 2.2000E 02 PHI= 0.0 SOURCE POINT 3 34 1

ZONE	BOUNDARY	DISTANCE	X	Y	Z
1		1.0981D 01	3.4072D 00	1.1070D 00	2.2450D 02
1000		5.7238D 00	1.4308D 01	7.9053D-01	2.2321D 02
2		2.1705D 01	1.9990D 01	6.2557D-01	2.2254D 02

QAD-GEOM(360)-CYLINDRICAL EXAMPLE PROBLEM SHIPPING CASK

RECEIVER NUMBER 1 COORDINATES - R 4.1537E 01 PHI 0.0 Z 2.2000E 02

GRP NO	MEAN ENERGY MEV	ENERGY GROUP LIMITS MEV	DIRECT BEAM FLUX PHOTONS PER SQ CM SEC	MEAN BUILDUP FACTORS	DOSE RATE DIRECT BEAM MRAD PER HR	DOSE RATE WITH BUILDUP	HEATING RATES IN IRON DIRECT BEAM	HEATING RATES IN IRON WITH BUILDUP
TOTAL	1.8501	0.4-4.0	3.5114E 04	6.0836E 00	9.5782E 01	5.8270E 02	3.5114E 04	2.1267E 05
W/BU	1.8618							
1	0.6300	0.4-0.9	5.9001E-03	8.6895E 00	6.8594E-06	5.9605E-05	5.9001E-03	5.1269E-02
2	1.1000	0.9-1.35	1.6922E 02	5.9861E 00	3.1132E-01	1.8636E 00	1.6922E 02	1.0130E 03
3	1.5500	1.35-1.8	2.2401E 04	5.9415E 00	5.4064E 01	3.2122E 02	2.2401E 04	1.3310E 05
4	1.9900	1.8-2.2	1.8654E 03	6.0879E 00	5.3519E 00	3.2582E 01	1.8654E 03	1.1356E 04
5	2.3800	2.2-2.6 2	8.7024E 03	6.2733E 00	2.8667E 01	1.7984E 02	8.7024E 03	5.4593E 04
6	2.7500	.6-3.0	1.6865E 03	6.3451E 00	6.1517E 00	3.9033E 01	1.6865E 03	1.0701E 04
7	3.2500	3.0-3.5	1.6804E 02	6.4893E 00	6.9289E-01	4.4964E 00	1.6804E 02	1.0905E 03
8	3.7000	3.5-4.0	1.2130E 02	6.7389E 00	5.4357E-01	3.6631E 00	1.2130E 02	8.1746E 02

QAD-GEOM(360)-CYLINDRICAL EXAMPLE PROBLEM SHIPPING CASK

RECEIVER NUMBER 2 COORDINATES - R 5.0000E 01 PHI 0.0 Z 2.2000E 02

GEOMETRY PRINT FOR PSEUDO SOURCE POINT AT THE COORDINATE ORIGIN

ZONE	BOUNDARY	DISTANCE	X	Y	Z
0		1.0255D 02	0.0	0.0	0.0
2		8.4873D 01	2.2727D 01	0.0	1.0000D 02

QAD-GEOM(360)-CYLINDRICAL EXAMPLE PROBLEM SHIPPING CASK

RCVR 2 R= 5.0000E 01 Z= 2.2000E 02 PHI= 0.0 SOURCE POINT 1 1 1

ZONE	BOUNDARY	DISTANCE	X	Y	Z
1		2.4840D 01	6.8143D-01	2.2140D-01	1.4500D 02
1000		1.0321D 01	1.4329D 01	1.6014D-01	1.6575D 02
2		3.9199D 01	2.0000D 01	1.3468D-01	1.7438D 02

RCVR 2 R= 5.0000E 01 Z= 2.2000E 02 PHI= 0.0 SOURCE POINT 3 34 1

ZONE	BOUNDARY	DISTANCE	X	Y	Z
1		1.0951D 01	3.4072D 00	1.1070D 00	2.2450D 02
1000		5.7104D 00	1.4305D 01	8.4810D-01	2.2345D 02
2		2.1656D 01	1.9987D 01	7.1309D-01	2.2290D 02

QAD-GEOM(360)-CYLINDRICAL EXAMPLE PROBLEM SHIPPING CASK

RECEIVER NUMBER 2 COORDINATES - R 5.0000E 01 PHI 0.0 Z 2.2000E 02

GRP NO	MEAN ENERGY MEV	ENERGY GROUP LIMITS MEV		DIRECT BEAM FLUX PHOTONS PER SQ CM SEC	MEAN BUILDUP FACTORS	DOSE RATE DIRECT BEAM MRAD PER HR	DOSE RATE WITH BUILDUP	HEATING RATES IN IRON DIRECT BEAM	HEATING RATES IN IRON WITH BUILDUP
TOTAL	1.8499	0.4-4.0		2.9109E 04	6.0799E 00	7.9396E 01	4.8272E 02	2.9109E 04	1.7619E 05
W/BU	1.8616								
1	0.6300	0.4-0.9		4.9993E-03	8.6506E 00	5.8121E-06	5.0279E-05	4.9993E-03	4.3247E-02
2	1.1000	0.9-1.35		1.4080E 02	5.9807E 00	2.5902E-01	1.5491E 00	1.4080E 02	8.4206E 02
3	1.5500	1.35-1.8		1.8578E 04	5.9377E 00	4.4838E 01	2.6623E 02	1.8578E 04	1.1031E 05
4	1.9900	1.8-2.2		1.5457E 03	6.0845E 00	4.4347E 00	2.6983E 01	1.5457E 03	9.4048E 03
5	2.3800	2.2-2.6	2	7.2087E 03	6.2705E 00	2.3746E 01	1.4890E 02	7.2087E 03	4.5202E 04
6	2.7500	.6-3.0		1.3968E 03	6.3410E 00	5.0950E 00	3.2308E 01	1.3968E 03	8.8572E 03
7	3.2500	3.0-3.5		1.3916E 02	6.4847E 00	5.7379E-01	3.7209E 00	1.3916E 02	9.0238E 02
8	3.7000	3.5-4.0		1.0045E 02	6.7334E 00	4.5012E-01	3.0308E 00	1.0045E 02	6.7637E 02

CODED BY _____
DATE _____ REQUEST NO. _____

FORTRAN

PROBLEM _____
PROGRAM _____
PAGE _____ OF _____

STATEMENT TYPE	NUMBER	CONT	FORTRAN STATEMENT	IDENTIFICATION
			QAD-GEOM(360) - SPHERICAL EXAMPLE INPUT	
			QAD-GEØM(360)-SPHERICAL EXAMPLE PRØBLEM	CARD A
			9 20 40 7 3 1 8 2 1 0 1 200 199 0	CARD B
			1 10.0	
			2 15.0	
			3 50.0	
			(BLANK CARD)	
			(BLANK CARD)	
			1.0 0.0 0.0 0.0 0.0 0.0 0.0	CARD C
			0.0 1.0 2.0 3.0 4.0 6.0 7.0 8.0	CARD D1
			9.0 10.0	CARD D2
			0.0 .1571 .3142 .4713 .6284 .7855 .9426 1.100	CARD E1
			1.2571 1.4142 1.5713 1.7284 1.8858 2.0429 2.200 2.3571	CARD E2
			2.5142 2.6713 2.8284 2.9855 3.1416	CARD E3
			0.0 .07850 .1571 .2356 .3142 .3927 .4712 .5498	CARD F1
			.6283 .7069 .7854 .8639 .9423 1.021 1.0996 1.1781	CARD F2
			1.2566 1.3352 1.4137 1.4923 1.5708 1.6493 1.7279 1.8064	CARD F3
			1.8850 1.9635 2.0420 2.1206 2.1992 2.2776 2.3562 2.4347	CARD F4
			2.5133 2.5918 2.6704 2.7489 2.8274 2.9060 2.9845 3.0631	CARD F5
			3.1416	CARD F6
			4 1 8 24 26 28 82 92	CARD M

CODED BY _____
DATE _____ REQUEST NO. _____

FORTRAN

PROBLEM _____
PROGRAM _____
PAGE _____ OF _____

QAD-GEOM(360)- SPHERICAL EXAMPLE INPUT

STATEMENT TYPE	NUMBER	CONT	FORTRAN STATEMENT	IDENTIFICATION
			0.041 0.513 0.192 0.790 0.085 1.378	CARD N1
			0.0 0.0 0.0 0.0 0.0 11.35 0.0	CARD N2
			0.0 0.0 0.0 0.0 0.0 0.0 0.0	CARD N3
			0.630 1.100 1.550 1.990 2.380 2.750 3.250 3.700	CARD O
			1.386E+162.565E+156.430E+151.362E+144.165E+145.504E+134.180E+122.952E+12	CARD P
			1.1626E-31.8397E-32.4135E-32.8691E-33.2941E-33.6476E-34.1234E-34.4810E-3	CARD Q
			1.0 1.0 1.0 1.0 1.0 1.0 1.0 1.0	CARD R
			0.4-4.0	CARD S
			0.4-0.9 0.9-1.35 1.35-1.8 1.8-2.2 2.2-2.6 2.6-3.0	CARD T1
			3.0-3.5 3.5-4.0	CARD T2
			PHØTØNS PER SQ CM SEC MRAD PER HR	CARD U
			15.0 0.0 0.0 2	CARD X1
			30.0 0.0 0.0 2	CARD X2
			-1	CARD Y

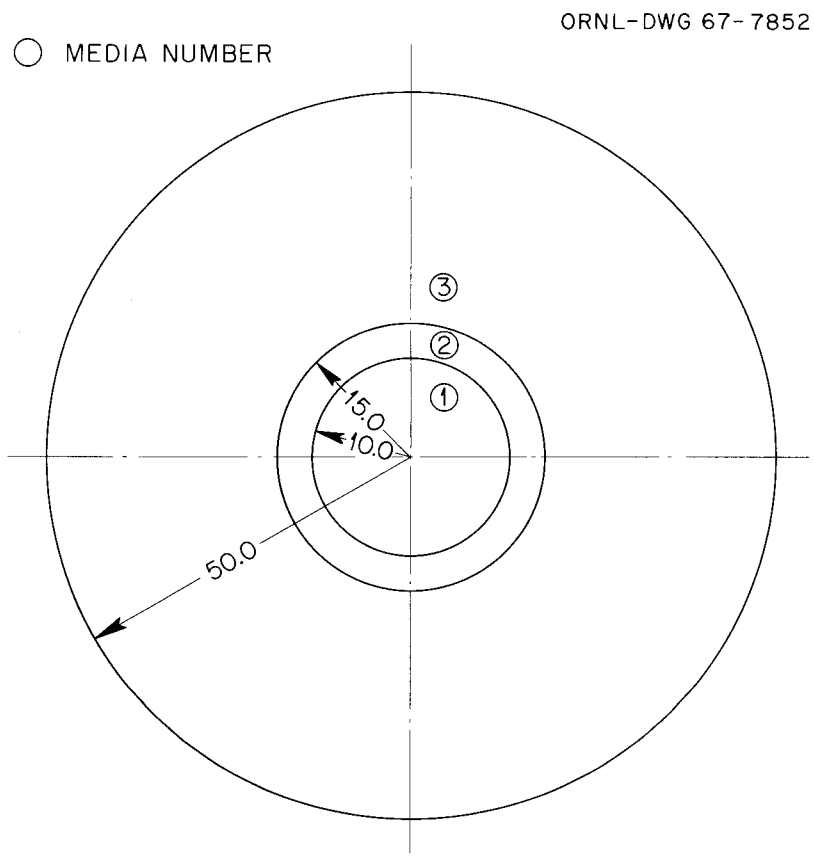

Fig. A4. Geometry for QAD-GEOM(360) Spherical Example.

QAD-GEOM(360)-SPHERICAL EXAMPLE PROBLEM

CONTROL	9	20	40	7	3	1	8	0	2	0	1	0	1	1	200	0
			0	-7	1	10	0	0	0	0	0	0	0	0	0	0

SPHERICAL GEOM

MEDIUM	RADIUS
1	0.10000D 02
2	0.15000D 02
3	0.50000D 02

REGION RADIUS

NO REGION GEOMETRY

SOURCE	1.0000E 00	0.0	0.0	0.0	0.0	0.0	0.0	
R	0.0	1.0000E 00	2.0000E 00	3.0000E 00	4.0000E 00	6.0000E 00	7.0000E 00	8.0000E 00
	9.0000E 00	1.0000E 01						
Z	0.0	1.5710E-01	3.1420E-01	4.7130E-01	6.2840E-01	7.8550E-01	9.4260E-01	1.1000E 00
	1.2571E 00	1.4142E 00	1.5713E 00	1.7284E 00	1.8858E 00	2.0429E 00	2.2000E 00	2.3571E 00
	2.5142E 00	2.6713E 00	2.8284E 00	2.9855E 00	3.1416E 00			
PHI	0.0	7.8500E-02	1.5710E-01	2.3560E-01	3.1420E-01	3.9270E-01	4.7120E-01	5.4980E-01
	6.2830E-01	7.0690E-01	7.8540E-01	8.6390E-01	9.4230E-01	1.0210E 00	1.0996E 00	1.1781E 00
	1.2566E 00	1.3352E 00	1.4137E 00	1.4923E 00	1.5708E 00	1.6493E 00	1.7279E 00	1.8064E 00
	1.8850E 00	1.9635E 00	2.0420E 00	2.1206E 00	2.1992E 00	2.2776E 00	2.3562E 00	2.4347E 00
	2.5133E 00	2.5918E 00	2.6704E 00	2.7489E 00	2.8274E 00	2.9060E 00	2.9845E 00	3.0631E 00
	3.1416E 00							

COMP/MAT	H	O	CR	FE	NI	PB	U	
1	4.1000E-02	5.1300E-01	1.9200E-01	7.9000E-01	8.5000E-02	0.0	1.3780E 00	
2	0.0	0.0	0.0	0.0	0.0	1.1350E 01	0.0	
3	0.0	0.0	0.0	0.0	0.0	0.0	0.0	
GRP/MAT	H	O	CR	FE	NI	PB	U	
		NEUTRON REMOVAL CROSS-SECTION						
	6.0200E-01	3.7280E-02	2.1090E-02	2.1360E-02	1.9400E-02	1.0260E-02	9.1100E-03	
		MATERIAL HYDROGEN DENSITY						
	1.0000E 00	0.0	0.0	0.0	0.0	0.0	0.0	
		GAMMA ATTENUATION COEFFICIENT						
1	1.5700E-01	7.9130E-02	7.3690E-02	7.4730E-02	7.6785E-02	1.0944E-01	1.2988E-01	6.3000E-01
2	1.2140E-01	6.1240E-02	5.6760E-02	5.7300E-02	5.8860E-02	6.4960E-02	7.1520E-02	1.1000E 00
3	1.0146E-01	5.1070E-02	4.7570E-02	4.7890E-02	4.9280E-02	5.0650E-02	5.4160E-02	1.5500E 00
4	8.7908E-02	4.4646E-02	4.2026E-02	4.2522E-02	4.3824E-02	4.5810E-02	4.8528E-02	1.9900E 00
5	8.0570E-02	4.1232E-02	3.9430E-02	3.9968E-02	4.1230E-02	4.4332E-02	4.6918E-02	2.3800E 00
6	7.3725E-02	3.8050E-02	3.7025E-02	3.7600E-02	3.8825E-02	4.3000E-02	4.5475E-02	2.7500E 00
7	6.6300E-02	3.4650E-02	3.4600E-02	3.5250E-02	3.6475E-02	4.2075E-02	4.4375E-02	3.2500E 00
8	6.1260E-02	3.2400E-02	3.3160E-02	3.3900E-02	3.5170E-02	4.2030E-02	4.4150E-02	3.7000E 00

XNM PB D BUILDUP IS USED

GRP	EPS/E	DELTA/K	A1/B0	A2/B1	A3/B2	A4/B3
1	1.3860E 16	1.1626E-03	1.0060E 00	2.7584E-01	-1.6323E-02	5.5169E-04
2	2.5650E 15	1.8397E-03	1.0170E 00	3.5220E-01	-1.0428E-02	3.5658E-04
3	6.4300E 15	2.4135E-03	1.0167E 00	3.8151E-01	-4.6882E-03	1.6523E-04
4	1.3620E 14	2.8691E-03	1.0111E 00	3.8177E-01	4.9015E-04	3.1201E-05
5	4.1650E 14	3.2941E-03	1.0046E 00	3.6678E-01	4.4185E-03	-1.4059E-05
6	5.5040E 13	3.6476E-03	9.9875E-01	3.4475E-01	7.3978E-03	2.0866E-05
7	4.1800E 12	4.1234E-03	9.9297E-01	3.0967E-01	1.0098E-02	1.9652E-04
8	2.9520E 12	4.4810E-03	9.9063E-01	2.7804E-01	1.1151E-02	4.7617E-04

ALBERT-WELTON COEFFICIENTS
2.6550E-08 2.9000E-01 8.3000E-01 5.8000E-01

EG-

6.3000E-01 1.1000E 00 1.5500E 00 1.9900E 00 2.3800E 00 2.7500E 00 3.2500E 00 3.7000E 00

FE ABS G-

1.0000E 00 1.0000E 00 1.0000E 00 1.0000E 00 1.0000E 00 1.0000E 00 1.0000E 00 1.0000E 00

EN-

1.0000E 01 8.0000E 00 6.0000E 00 5.0000E 00 4.0000E 00 3.0000E 00 2.0000E 00 1.0000E 00 6.7000E-01
3.3000E-01

FE ABS N-

2.2500E-15 9.2700E-16 5.4700E-16 4.6800E-16 3.8000E-16 3.0700E-16 2.1600E-16 1.0400E-16 8.3500E-17
4.6700E-17

WIDTH T- 0.4-4.0 12.0-.10

WIDTH G- 0.4-0.9 0.9-1.35 1.35-1.8 1.8-2.2 2.2-2.6 2.6-3.0
3.0-3.5 3.5-4.0

WIDTH N- 12.-9.0 9.0-7.0 7.0-5.5 5.5-4.5 4.5-3.5 3.5-2.5 2.5-1.5 1.5-.83 0.83-.5
0.5-.10

UNIT G- PHOTONS PER MRAD SQ CM SEC PER HR

UNIT N- RAD WATTS PER PER SEC GRAM RAD PER SEC

COORDINATE TYPE 2 SOURCE INTENSITY OPTION 1

RHO COORDINATE

	COORDINATE	INTENSITY	COORDINATE	INTENSITY	COORDINATE	INTENSITY	COORDINATE	INTENSITY
1	5.0000E-01	3.3333E-01	1.5000E 00	2.3333E 00	2.5000E 00	6.3333E 00	3.5000E 00	1.2333E 01
5	5.0000E 00	5.0667E 01	6.5000E 00	4.2333E 01	7.5000E 00	5.6333E 01	8.5000E 00	7.2333E 01
9	9.5000E 00	9.0333E 01	0.0	0.0	-4.1140E-50	4.9105E 57	-7.4860E-55	8.8494E 17

PHI COORDINATE

	COORDINATE	INTENSITY	COORDINATE	INTENSITY	COORDINATE	INTENSITY	COORDINATE	INTENSITY
1	3.9250E-02	7.8500E-02	1.1780E-01	7.8600E-02	1.9635E-01	7.8500E-02	2.7490E-01	7.8600E-02
5	3.5345E-01	7.8500E-02	4.3195E-01	7.8500E-02	5.1050E-01	7.8600E-02	5.8905E-01	7.8500E-02
9	6.6760E-01	7.8600E-02	7.4615E-01	7.8500E-02	8.2465E-01	7.8500E-02	9.0310E-01	7.8400E-02
13	9.8165E-01	7.8700E-02	1.0603E 00	7.8600E-02	1.1388E 00	7.8500E-02	1.2173E 00	7.8500E-02
17	1.2959E 00	7.8600E-02	1.3744E 00	7.8500E-02	1.4530E 00	7.8600E-02	1.5315E 00	7.8501E-02
21	1.6100E 00	7.8500E-02	1.6886E 00	7.8600E-02	1.7671E 00	7.8500E-02	1.8457E 00	7.8600E-02
25	1.9242E 00	7.8500E-02	2.0027E 00	7.8501E-02	2.0813E 00	7.8600E-02	2.1599E 00	7.8600E-02
29	2.2384E 00	7.8400E-02	2.3169E 00	7.8600E-02	2.3954E 00	7.8500E-02	2.4740E 00	7.8601E-02
33	2.5525E 00	7.8500E-02	2.6311E 00	7.8600E-02	2.7096E 00	7.8500E-02	2.7881E 00	7.8500E-02
37	2.8667E 00	7.8600E-02	2.9452E 00	7.8501E-02	3.0238E 00	7.8600E-02	3.1023E 00	7.8500E-02

THETA COORDINATE

	COORDINATE	INTENSITY	COORDINATE	INTENSITY	COORDINATE	INTENSITY	COORDINATE	INTENSITY
1	7.8550E-02	5.8799E-06	2.3565E-01	1.7495E-05	3.9275E-01	2.8679E-05	5.4985E-01	3.9157E-05
5	7.0695E-01	4.8670E-05	8.6405E-01	5.6985E-05	1.0213E 00	6.4023E-05	1.1785E 00	6.9242E-05
9	1.3356E 00	7.2871E-05	1.4927E 00	7.4704E-05	1.6498E 00	7.4698E-05	1.8071E 00	7.2989E-05
13	1.9643E 00	6.9204E-05	2.1214E 00	6.3857E-05	2.2785E 00	5.6936E-05	2.4356E 00	4.8613E-05
17	2.5927E 00	3.9093E-05	2.7498E 00	2.8609E-05	2.9069E 00	1.7421E-05	3.0635E 00	5.8049E-06

QAD-GEOM(360)-SPHERICAL EXAMPLE PROBLEM

RECEIVER NUMBER 1 COORDINATES - RHO 1.5000E 01 PHI 0.0 THETA 0.0

GEOMETRY PRINT FOR PSEUDO SOURCE POINT AT THE COORDINATE ORIGIN

ZONE	BOUNDARY	DISTANCE	X	Y	Z
1		1.0000D 01	0.0	0.0	0.0
2		5.0000D 00	0.0	0.0	1.0000D 01

QAD-GEOM(360)-SPHERICAL EXAMPLE PROBLEM

RCVR 1 RHO= 1.5000E 01 THETA= 0.0 PHI= 0.0 SOURCE POINT 1 1 1

ZONE	BOUNDARY	DISTANCE	X	Y	Z
1		9.5016D 00	3.9204D-02	1.5396D-03	4.9846D-01
2		5.0000D 00	1.3517D-02	5.3083D-04	1.0000D 01
3		8.8818D-16	2.6021D-18	1.0842D-19	1.5000D 01

QAD-GEOM(360)-SPHERICAL EXAMPLE PROBLEM

RECEIVER NUMBER 1 COORDINATES - RHO 1.5000E 01 PHI 0.0 THETA 0.0

GRP NO	MEAN ENERGY MEV	ENERGY GROUP LIMITS MEV	DIRECT BEAM FLUX PHOTONS PER SQ CM SEC	MEAN BUILDUP FACTORS	DOSE RATE DIRECT BEAM MRAD PER HR	DOSE RATE WITH BUILDUP	HEATING RATES IN IRON DIRECT BEAM	HEATING RATES IN IRON WITH BUILDUP
TOT	1.5864	0.4-4.0	4.1439E 10	2.5010E 00	1.0095E 08	2.5247E 08	4.1439E 10	1.0390E 11
W/E	1.5808							
1	0.6300	0.4-0.9	8.4382E 08	2.4328E 00	9.8102E 05	2.3866E 06	8.4382E 08	2.0529E 09
2	1.1000	0.9-1.35	4.0702E 09	2.5826E 00	7.4880E 06	1.9338E 07	4.0702E 09	1.0512E 10
3	1.5500	1.35-1.8	3.1422E 10	2.5172E 00	7.5838E 07	1.9090E 08	3.1422E 10	7.9095E 10
4	1.9900	1.8-2.2	1.0008E 09	2.4563E 00	2.8715E 06	7.0532E 06	1.0008E 09	2.4583E 09
5	2.3800	2.2-2.6	3.5038E 09	2.3990E 00	1.1542E 07	2.7689E 07	3.5038E 09	8.4057E 09
6	2.7500	2.6-3.0	5.2322E 08	2.3151E 00	1.9085E 06	4.4182E 06	5.2322E 08	1.2113E 09
7	3.2500	3.0-3.5	4.3682E 07	2.1967E 00	1.8012E 05	3.9567E 05	4.3682E 07	9.5958E 07
8	3.7000	3.5-4.0	3.1475E 07	2.1049E 00	1.4104E 05	2.9687E 05	3.1475E 07	6.6251E 07

QAD-GEOM(360)-SPHERICAL EXAMPLE PROBLEM

RECEIVER NUMBER 2 COORDINATES - RHO 3.0000E 01 PHI 0.0 THETA 0.0

GEOMETRY PRINT FOR PSEUDO SOURCE POINT AT THE COORDINATE ORIGIN

ZONE	BOUNDARY	DISTANCE	X	Y	Z
1		1.0000D 01	0.0	0.0	0.0
2		5.0000D 00	0.0	0.0	1.0000D 01
3		1.5000D 01	0.0	0.0	1.5000D 01

QAD-GEOM(360)-SPHERICAL EXAMPLE PROBLEM

RCVR 2 RHO= 3.0000E 01 THETA= 0.0 PHI= 0.0 SOURCE POINT 1 1 1

ZONE	BOUNDARY	DISTANCE	X	Y	Z
1		9.5015D 00	3.9204D-02	1.5396D-03	4.9846D-01
2		5.0000D 00	2.6578D-02	1.0437D-03	1.0000D 01
3		1.5000D 01	1.9933D-02	7.8279D-04	1.5000D 01

QAD-GEOM(360)-SPHERICAL EXAMPLE PROBLEM

RECEIVER NUMBER 2 COORDINATES - RHO 3.0000E 01 PHI 0.0 THETA 0.0

GRP NO	MEAN ENERGY MEV	ENERGY GROUP LIMITS MEV	DIRECT BEAM FLUX PHOTONS PER SQ CM SEC	MEAN BUILDUP FACTORS	DOSE RATE DIRECT BEAM MRAD PER HR	DOSE RATE WITH BUILDUP	HEATING RATES IN IRON DIRECT BEAM	HEATING RATES IN IRON WITH BUILDUP
TOTAL	1.5860	0.4-4.0	9.6547E 09	2.4981E 00	2.3514E 07	5.8742E 07	9.6547E 09	2.4179E 10
W/BU	1.5803							
1	0.6300	0.4-0.9	1.9869E 08	2.4295E 00	2.3099E 05	5.6121E 05	1.9869E 08	4.8272E 08
2	1.1000	0.9-1.35	9.5103E 08	2.5815E 00	1.7496E 06	4.5166E 06	9.5103E 08	2.4551E 09
3	1.5500	1.35-1.8	7.3177E 09	2.5142E 00	1.7661E 07	4.4404E 07	7.3177E 09	1.8398E 10
4	1.9900	1.8-2.2	2.3308E 08	2.4494E 00	6.6872E 05	1.6379E 06	2.3308E 08	5.7089E 08
5	2.3800	2.2-2.6	8.1496E 08	2.3971E 00	2.6845E 06	6.4350E 06	8.1496E 08	1.9535E 09
6	2.7500	2.6-3.0	1.2180E 08	2.3102E 00	4.4427E 05	1.0264E 06	1.2180E 08	2.8138E 08
7	3.2500	3.0-3.5	1.0168E 07	2.1910E 00	4.1929E 04	9.1866E 04	1.0168E 07	2.2279E 07
8	3.7000	3.5-4.0	7.3277E 06	2.1009E 00	3.2836E 04	6.8983E 04	7.3277E 06	1.5394E 07

APPENDIX B. QAD DATA SHEETS

QAD DATA SHEET - 1

REQUEST	JOB TITLE	WRITTEN BY	DATE

IDENTIFICATION (72) (80)

LSO	MSO	NSO	MAT	NCOMP	NREG	NRGY	NBOUND	NSOPT	NZSO	ISRC	INEUT	NGPF	NGPL	NGPI	NGINT

TOTAL SOURCE ← CONSTANTS FOR COSINE SOURCE DISTRIBUTION IF ISRC = 1 →

COORDINATES FOR SOURCE VOLUME ALONG R(CYL.) OR X(CART.) OR ρ(SPHER.) AXIS (LSO + 1 VALUES)

COORDINATES FOR SOURCE VOLUME ALONG Z(CYL.) OR Y(CART.) OR θ(SPHER.) AXIS (MSO + 1 VALUES)

COORDINATES FOR SOURCE VOLUME ALONG ϕ(CYL.) OR Z(CART.) OR ϕ(SPHER.) AXIS (NSO + 1 VALUES)

(IF ISRC = 2) WEIGHTING FACTORS FOR SOURCE STRENGTH AT EACH POINT SPECIFIED ON CARDS D

(IF ISRC = 2) WEIGHTING FACTORS FOR SOURCE STRENGTH AT EACH POINT SPECIFIED ON CARD E

(IF ISRC = 2) WEIGHTING FACTORS FOR SOURCE STRENGTH AT EACH POINT SPECIFIED ON CARD F

A	B	C	D 1	D 2	D 3	D 4	D 5	
E 1	E 2	E 3	E 4	E 5	F 1	F 2	F 3	F 4
F 5	G 1	G 2	G 3	G 4	H 1	H 2	H 3	H 4
I 1	I 2	I 3	I 4					

UCN-8286
(3 6-67)

QAD DATA SHEET - 2

REQUEST	JOB TITLE	WRITTEN BY	DATE

IV NCOMPZN IV = NUMBER OF BOUNDARIES USED IN DESCRIBING THIS REGION NCOMPZN = COMPOSITION NUMBER 72

J 1

± LBD NTRYZN ± LBD NTRYZN ± LBD NTRYZN ± LBD NTRYZN ± LBD NTRYZN ± LBD NTRYZN

K 1

J AND K CARDS ARE CONTINUED BELOW FOR EACH REGION IN THE ORDER CORRESPONDING TO THE REGION NUMBERS.

J 2 K 2 J 3 K 3 J 4 K 4 J 5 K 5 J 6 K 6 J 7 K 7 J 8 K 8 J 9 K 9 J 10 K 10

LBD IS THE BOUNDARY NO.

NTRYZN IS THE PROBABLE REGION OF ENTRY WHEN THE BOUNDARY LBD IS CROSSED.

THE SIGN ON LBD INDICATES WHETHER THIS BOUNDARY IS + OR - WITH RESPECT TO THE REGION BEING DESCRIBED.

LBD	NEQ	ABD	BBD	CBD	XBBD	YDBD	ZOBD	DBD

L 1 L 2 L 3 L 4 L 5 L 6 L 7 L 8 L 9 L 10 L 11 L 12 L 13 L 14

UCN-8286
(3 8-67)

QAD DATA SHEET - 3

REQUEST	JOB TITLE	WRITTEN BY	DATE

NBLD MATZ(1) MATZ(2) MATZ(3) ETC. (MATZ = ATOMIC NUMBER OF ELEMENT) 72 80 M

DENSITY OF ELEMENTS IN COMPOSITION NUMBER 1 N 1 N 2

CONTINUE ELEMENT DENSITY CARDS FOR EACH COMPOSITION N 3 N 4 N 5 N 6 N 7 N 8 N 9 N 10

EBAR (MEAN GAMMA ENERGY FOR EACH ENERGY GROUP) O 1 O 2 O 3 O 4

GAMEN (GAMMA SOURCE INTENSITY FOR EACH ENERGY GROUP) P 1 P 2 P 3 P 4

CONV (FLUX TO DOSE CONVERSION FACTOR FOR EACH GAMMA ENERGY GROUP) Q 1 Q 2 Q 3 Q 4

FEABSG (GAMMA FLUX TO HEAT CONVERSION IN Fe FOR EACH GAMMA ENERGY GROUP) R 1 R 2 R 3 R 4

WIDTHT (TOTAL WIDTH OF GAMMA ENERGY RANGE. FOR EXAMPLE 0.1 – 4.0) S

UCN-8286 (3 8-67)

QAD DATA SHEET - 4

REQUEST	JOB TITLE	WRITTEN BY	DATE

WIDTHG (WIDTH OF EACH GAMMA ENERGY GROUP. FOR EXAMPLE 0.1 – 1.0) 72 80

T 1
T 2
T 3
T 4
T 5

← UNITS FOR GAMMA FLUX → ← UNITS FOR GAMMA DOSE → ← UNITS FOR GAMMA HEATING IN Fe →

U

(USE ONLY IF NGINT >0) CONVERSION FACTORS FROM GAMMA FLUX TO OTHER DESIRED UNITS FOR EACH GAMMA ENERGY GROUP

V 1
V 2
V 3
V 4

(USE ONLY IF NGINT >0) UNITS OF THE QUANTITIES CALCULATED FROM CONVERSION FACTORS OF CARD V

W 1
W 2
W 3
W 4
W 5

RRC	ZRC	PHIRC	NRCOPT	NGPF	NGPL	NGPI

RRC – THE R OR X OR ρ DETECTOR COORDINATE

ZRC – THE Z OR Z OR θ DETECTOR COORDINATE

PHIRC – THE ϕ OR Y OR ϕ DETECTOR COORDINATE

NRCOPT – RECEIVER GEOMETRY OPTION
- 0 - CYLINDRICAL
- 1 - CARTESIAN
- 2 - SPHERICAL

NGIPF, NGPL, NGPI } SAME MEANING AS ON CARD B. IF THESE ARE NOT ZERO THEY OVERRIDE THE VALUES ON CARD B.

X 1
X 2
X 3
X 4
X 5
X 6
X 7
X 8
X 9
X 10
X 11
X 12
X 13
X 14
X 15
X 16

– 1

Y

UCN-8256
(3 8-67)

APPENDIX C. LISTING OF QAD-P5A(360)

The following pages contain the complete FORTRAN IV listing of QAD-P5A(360) for the IBM 360 computer. This program contains the following subroutines:

		Pg. No.
1.	Main Program	94
2.	Subroutine INPUT	102
3.	Subroutine LENGTH	110
4.	Subroutine KERNEL	115
5.	Subroutine SOURCE	117
6.	Subroutine XSECQD	123
7.	Subroutine PRINT	125
8.	Subroutine TITLE	128
9.	Subroutine SLITET	129
10.	Subroutine SLITE	129
11.	Subroutine WEIGHT	130
12.	MOMENT	133
13.	XSECO	138

```
COMPILER OPTIONS - NAME=  MAIN,OPT=00,LINECNT=50,SOURCE,EBCDIC,NOLIST,NODECK,LOAD,MAP,NOEDIT,NOID

              C      PROGRAM QAD-P5A
              C      CROSS-SECTIONS AND NEUTRON PARAMETERS ADDED JULY 1965  G.P.LAHTI
              CQAD-P5  MAIN PROGRAM WITH NEUTRON MOMENTS CALCULATION. 5 NEUT. SETS.    QAD-0010
              C         CARTESIAN, SPHERIC, AND CYLINDRIC SOURCE AND DETECTOR OPTIONS   QAD-0020
              C                    AND THE EXPANDED PRINT                               QAD-0030
ISN 0002            DIMENSION   DGAM(30), UDGAM(30), ENEUT(15,5), AGAM(30), UAGAM(30), QAD-0050
                   1   A NEUT(16,5), SREG(20)                                           QAD-0060
ISN 0003            DIMENSION  IS MAX(3), IS MIN(3)                                    QAD-0070
ISN 0004            DIMENSION  C DET(3), TOTAL G(6), TOTAL N(5,5), GRP G(30,6),        QAD-0180
                   1   GRP N(15,5,5), TOTL GI(6), TOTL NI(3,5), GRP GI(30,6),          QAD-0190
                   2   GRP NI(15,3,5), EG AV(2), EN AV(5)                              QAD-0200
ISN 0005            DIMENSION  UNIT G(18),              UNIT GI(27),                   QAD-0210
                   2   EE ABS G(30),  WIDTHG(30,3),WT G(30,3), NSIND(5,3)              QAD-0230
ISN 0006            COMMON /QADNM/  NBMID(18,3), NASET(3), RMXSEC(3), BREAK(3,2),
                   1 XNMMC(5,30,3), CONVN(10)  , HISTN(10), EN(10)  , EEABSN(10),
                   2 WIDTHN(10,2) , WTN(10,3),       UNITN(12), UNITNI(27),UNITND(3),
                   3 WIDTHT(2,2)
ISN 0007            COMMON /QADATA/
                   1 NSET  (30)   , RSO  (101)   , PHISO (101)  , ZSO  (101)   ,
                   2 NBNDZN(50)   , NCMPZN(50)   , LBD   (6,50) , NTRYZN(6,50) ,
                   3 NEQBD (50)   , ABD   (50)   , BBD   (50)   , CBD   (50)   ,
                   4 XOBD  (50)   , YOBD  (50)   , ZOBD  (50)   , DBD   (50)   ,
                   5 HYDRAT(30)   , XSECN (30)   , XSECG (20,30), BILD0 (30)   ,
                   6 BILD1 (30)   , BILD2 (30)   , BILD3 (30)   , GAMEN (30)   ,
                   7 CONV  (30)   , COMP  (20,40), EG    (30)   , MATZ  (20)   ,
                   8 EL    (101)  , EN    (101)  , EM    (101)  , XISO  (2,3)  ,
                   9 ASO   , IU    , RRC    , ZRC   , PHIRC ,ALF1  , ALF2  , ALF3  ,
                   X ALF4  , EPSLN , FUDGE , NBLD ,ID(18)
```

```
ISN 0008          EQUIVALENCE  (LSO, NSET(1)), (MSO, NSET(2)), (NSO, NSET(3)),        QAD-0430
                 1   (MAT, NSET(4)), (NCOMP, NSET(5)), (NREG, NSET(6)),                QAD-0440
                 2   (NRGY, NSET(7)), (NBOUND,NSET(8)), (NS OPT, NSET(9)),             QAD-0450
                 3   (ISRC, NSET(11)), (I NEUT, NSET(12))                              QAD-0460
ISN 0009       1   FORMAT  ( 3E9.4, 2( I5, I4 ))                                       QAD-0720
ISN 0010         4 FORMAT  ( 1H2, 20X, 38HGEOMETRY PRINT FOR PSEUDO SOURCE POINT,      QAD-0730
                 1   25H AT THE COORDINATE ORIGIN )                                    QAD-0740
ISN 0011       5   FORMAT  ( 1H4 )                                                     QAD-0750
ISN 0012       6   FORMAT  ( 1H1, 10X, 18A4 )                                          QAD-0760
ISN 0013       7   FORMAT  ( 1H0, 2X, 4HRCVR, I3, 2X, 2HR=, 1PE12.4, 2X, 2HZ=,        QAD-0770
                 1   1PE12.4, 2X, 4HPHI=, 1PE12.4, 2X, 12HSOURCE POINT, 3I3 )         QAD-0780
ISN 0014       8   FORMAT  ( 1H0, 2X, 4HRCVR, I3, 2X, 2HX=, 1PE12.4, 2X, 2HY=,        QAD-0790
                 1   1PE12.4, 2X, 2HZ=,   1PE12.4, 2X, 12HSOURCE POINT, 3I3 )         QAD-0800
ISN 0015       9   FORMAT  ( 1H0, 2X, 4HRCVR, I3, 2X, 4HRHO=, 1PE12.4, 2X, 6HTHETA=,  QAD-0810
                 1   1PE12.4, 2X, 4HPHI=, 1PE12.4, 2X, 12HSOURCE POINT, 3I3 )         QAD-0820
ISN 0016       10  FORMAT  ( 1H , 10X, 4HTYPE, I2, 29HGEOMETRY ERROR AT THIS POINT )  QAD-0830
ISN 0017       100 CALL SLITE (0)                                                      QAD-0860
ISN 0018           NO RC = 0                                                           QAD-0870
ISN 0019           IP = 3                                                              QAD-0880
ISN 0020           CALL INPUT
                 1 ( N1PT, UNITG, UNITGI, WIDTHG, NGINT, NNINT, FEABSG, WTG)
ISN 0021           IF  ( NS OPT )  1300,110,110
ISN 0022       110 IF ( ISRC )  1300,1300,120
ISN 0023       120 CALL  SOURCE                                                        QAD-0960
ISN 0024       1300 READ  (5     ,1)RRC, ZRC, PHIRC, N RC OPT, N GPF, N GPL,    N GPI QAD-0990
ISN 0025           X NL MAX = 0.0                                                      QAD-1000
ISN 0026           X NL MIN = 1000.0                                                   QAD-1010
ISN 0027           C DET(1) = RRC                                                      QAD-1020
ISN 0028           C DET(2) = PHIRC                                                    QAD-1030
ISN 0029           C DET(3) = ZRC                                                      QAD-1040
ISN 0030           IF  ( N RC OPT )   100,1305,1305                                    QAD-1050
ISN 0031       1305 MRC = N RC OPT + 1                                                 QAD-1080
ISN 0032           NO RC = NO RC + 1                                                   QAD-1090
ISN 0033           IF  ( N GPF )  131,131,132                                          QAD-1100
ISN 0034       131 N GPF = NSET(13)                                                    QAD-1110
ISN 0035       132 IF  ( N GPL )  133,133,134                                          QAD-1120
ISN 0036       133 N GPL = NSET(14)                                                    QAD-1130
ISN 0037       134 IF  ( N GPI )  135,135,136                                          QAD-1140
```

```
ISN 0038      135  N GPI = N SET(15)                                                    QAD-1150
ISN 0039      136  NGPI= MAXO( 1, NGPI)                                                 QAD-1160
ISN 0040      180  GO TO  ( 182, 184, 186 ), MRC                                        QAD-1170
ISN 0041      182  XRCVR = RRC * COS( PHIRC )                                           QAD-1180
ISN 0042           YRCVR = RRC * SIN( PHIRC )                                           QAD-1190
ISN 0043           ZRCVR = ZRC                                                          QAD-1200
ISN 0044           GO TO  200                                                           QAD-1210
ISN 0045      184  XRCVR = RRC                                                          QAD-1220
ISN 0046           YRCVR = PHIRC                                                        QAD-1230
ISN 0047           ZRCVR = ZRC                                                          QAD-1240
ISN 0048           GO TO  200                                                           QAD-1250
ISN 0049      186  XRCVR = RRC * SIN( ZRC )                                             QAD-1260
ISN 0050           YRCVR = XRCVR * SIN( PHIRC )                                         QAD-1270
ISN 0051           XRCVR = XRCVR * COS( PHIRC )                                         QAD-1280
ISN 0052           ZRCVR = RRC * COS( ZRC )                                             QAD-1290
ISN 0053       200 N GP C = 0                                                           QAD-1300
ISN 0054           IERR3 = 0                                                            QAD-1310
ISN 0055           NERR = 0                                                             QAD-1320
ISN 0056           DO  210  I=1,30                                                      QAD-1330
ISN 0057           UDGAM(I) = 0.0                                                       QAD-1340
ISN 0058           DGAM(I) = 0.0                                                        QAD-1350
ISN 0059       210 CONTINUE                                                             QAD-1360
ISN 0060           DO  220  I=1,15                                                      QAD-1370
ISN 0061           DO  220  J=1,5                                                       QAD-1380
ISN 0062           F NEUT(I,J) = 0.0                                                    QAD-1390
ISN 0063       220 CONTINUE                                                             QAD-1400
ISN 0064           AW NEUT = 0.0                                                        QAD-1410
ISN 0065           MS OPT = MAXO( NSOPT+ 1, 1 )                                         QAD-1420
ISN 0066           CALL SLITE (1)                                                       QAD-1430
ISN 0067           CALL  TITLE   ( 3, MRC, NORC, CDET(1), ID(1))                        QAD-1440
ISN 0068           IP = 10                                                              QAD-1450
ISN 0069      224  XSRC = 0.0                                                           QAD-1460
ISN 0070           YSRC = 0.0                                                           QAD-1470
ISN 0071           ZSRC = 0.0                                                           QAD-1480
ISN 0072           CALL  LENGTH                                                         QAD-1490
                  1   ( SREG(1), XRELL, SSO, XSRC, YSRC, ZSRC, XRCVR, YRCVR, ZRCVR,     QAD-1500
                  2      IERR1 )                                                        QAD-1510
```

```
ISN 0073      230  DO  500  N=1,NSO                                    QAD-1520
ISN 0074           GO TO  ( 231, 232, 231 ), MS OPT                   QAD-1530
ISN 0075      231  SINS = SIN( PHISO(N) )                             QAD-1540
ISN 0076           COSS = COS( PHISO(N) )                             QAD-1550
ISN 0077           GO TO  250                                         QAD-1560
ISN 0078      232  YSRC = PHISO(N)                                    QAD-1570
ISN 0079      250  DO  500  L=1,LSO                                   QAD-1580
ISN 0080           GO TO  ( 251, 252, 253 ), MS OPT                   QAD-1590
ISN 0081      251  XSRC = RSO(L) * COSS                               QAD-1600
ISN 0082           YSRC = RSO(L) * SINS                               QAD-1610
ISN 0083           GO TO  260                                         QAD-1620
ISN 0084      252  XSRC = RSO(L)                                      QAD-1630
ISN 0085           GO TO  260                                         QAD-1640
ISN 0086      253  SPHX = COSS * RSO(L)                               QAD-1650
ISN 0087           SPHY = SINS * RSO(L)                               QAD-1660
ISN 0088      260  FLN = FL(L) * FN(N)                                QAD-1670
ISN 0089      270  DO  500  M=1,MSO                                   QAD-1680
ISN 0090           GO TO  ( 271, 271, 272 ), MS OPT                   QAD-1690
ISN 0091      271  ZSRC = ZSO(M)                                      QAD-1700
ISN 0092           GO TO  280                                         QAD-1710
ISN 0093      272  XSRC = SPHX * SIN( ZSO(M) )                        QAD-1720
ISN 0094           YSRC = SPHY * SIN( ZSO(M) )                        QAD-1730
ISN 0095           ZSRC = RSO(L) * COS( ZSO(M) )                      QAD-1740
ISN 0096      280  FLMN = FLN * FM(M)                                 QAD-1750
ISN 0097      190  NGPC = NGPC + 1                                    QAD-1760
ISN 0098           IF  ( N GPC - N GPF )  400,293,291                 QAD-1770
ISN 0099      291  IF  ( N GPC - N GPL )  292,295,400                 QAD-1780
ISN 0100      292  IF  ( N GPC - N GPJ )  400,294,400                 QAD-1790
ISN 0101      293  N GPJ = N GPF + N GPI                              QAD-1800
ISN 0102           WRITE (6     ,6)ID                                 QAD-1810
ISN 0103           GO TO  296                                         QAD-1820
ISN 0104      294  N GPJ = N GPJ + N GPI                              QAD-1830
ISN 0105      295  WRITE (6     ,5)                                   QAD-1840
ISN 0106      296  CALL SLITE (1)                                     QAD-1850
ISN 0107           IP = 10                                            QAD-1860
ISN 0108           GO TO  ( 297, 298, 299 ), MRC                      QAD-1870
ISN 0109      297  WRITE (6     ,7)NO RC, RRC, ZRC, PHIRC, L, M, N    QAD-1880
ISN 0110           GO TO  400                                         QAD-1890
```

```
ISN 0111      298  WRITE (6      ,8)NO RC, XRC, YRC, ZRC, L, M, N                    QAD-1900
ISN 0112           GO TO  400                                                        QAD-1910
ISN 0113      299  WRITE (6      ,9)NO RC, XRC, YRC, ZRC, L, M, N                    QAD-1920
ISN 0114      400  CALL  LENGTH                                                      QAD-1930
                  1    ( SREG(1), XRELL, SSO, XSRC, YSRC, ZSRC, XRCVR, YRCVR, ZRCVR,  QAD-1940
                  2       IERR1)                                                     QAD-1950
ISN 0115           IF  ( IERR1 )  420,420,800                                        QAD-1960
ISN 0116      420  CALL  KERNEL                                                      QAD-1970
                  1    ( SREG(1), XRELL, ANEUT(1,1), AW A, AGAM(1), UAGAM(1), NERR)   QAD-1980
ISN 0117           IF  ( N ERR )  430,430,421                                        QAD-1990
ISN 0118      421  IF  ( N ERR - 5 )  422,422,430                                    QAD-2000
ISN 0119      422  NS IND(N ERR,1) = L                                               QAD-2010
ISN 0120           NS IND(N ERR,2) = M                                               QAD-2020
ISN 0121           NS IND(N ERR,3) = N                                               QAD-2030
ISN 0122      430  IF  ( X NL MAX - X REL L )  431,431,433                           QAD-2040
ISN 0123      431  X NL MAX = X REL L                                                QAD-2050
ISN 0124           IS MAX(1) = L                                                     QAD-2060
ISN 0125           IS MAX(2) = M                                                     QAD-2070
ISN 0126           IS MAX(3) = N                                                     QAD-2080
ISN 0127      433  IF  ( X NL MIN - X REL L )  436,434,434                           QAD-2090
ISN 0128      434  X NL MIN = X REL L                                                QAD-2100
ISN 0129           IS MIN(1) = L                                                     QAD-2110
ISN 0130           IS MIN(2) = M                                                     QAD-2120
ISN 0131           IS MIN(3) = N                                                     QAD-2130
ISN 0132      436  A = FLMN / ( 12.5663706 * SSO ** 2 )                              QAD-2140
ISN 0133           AN = 2.46* A
ISN 0134           DO  440  J=1,NRGY                                                 QAD-2160
ISN 0135           D  GAM(J) = D  GAM(J) + A  GAM(J) * A * GAMEN(J)                  QAD-2170
ISN 0136           UD GAM(J) = UD GAM(J) + UA GAM(J) * A * GAMEN(J)                  QAD-2180
ISN 0137       440 CONTINUE                                                          QAD-2190
ISN 0138           IF  ( I NEUT )  500,500,460                                       QAD-2200
ISN 0139       460 DO  480  J=1,I NEUT                                               QAD-2210
ISN 0140           J NEUT = N SET(20)                                                QAD-2220
ISN 0141           DO  480  I=1,J NEUT                                               QAD-2230
ISN 0142           F NEUT(I,J) = F NEUT(I,J) + AN * A NEUT(I,J)                      QAD-2240
ISN 0143       480 CONTINUE                                                          QAD-2250
ISN 0144           AW NEUT = AWNEUT + AN * AW A                                      QAD-2260
```

```
ISN 0145        500 CONTINUE                                          QAD-2270
ISN 0146        501 CONTINUE                                          QAD-2280
ISN 0147            DO  510  K=1,3                                    QAD-2290
ISN 0148            TOTL GI(K) = 0.0                                  QAD-2300
ISN 0149            TOTL GI(K+3) = 0.0                                QAD-2310
ISN 0150            DO  510  L=1,5                                    QAD-2320
ISN 0151            TOTL NI(K,L) = 0.0                                QAD-2330
ISN 0152        510 CONTINUE                                          QAD-2340
ISN 0153            DO  520  K=1,6                                    QAD-2350
ISN 0154            TOTAL G(K) = 0.0                                  QAD-2360
ISN 0155        520 CONTINUE                                          QAD-2370
ISN 0156            DO  530  K=1,5                                    QAD-2380
ISN 0157            DO  530  L=1,5                                    QAD-2390
ISN 0158            TOTAL N(K,L) = 0.0                                QAD-2400
ISN 0159        530 CONTINUE                                          QAD-2410
ISN 0160            EG AV(1) = 0.0                                    QAD-2420
ISN 0161            EG AV(2) = 0.0                                    QAD-2430
ISN 0162            BU FLX T = 0.0                                    QAD-2440
ISN 0163            DO  540  J=1,NRGY                                 QAD-2450
ISN 0164            GRP G (J,1) = UD GAM(J)                           QAD-2460
ISN 0165            TOTAL G (1) = TOTAL G(1) + GRP G(J,1)             QAD-2470
ISN 0166            GRPG(J,3)=UD GAM(J)*CONV(J)                       QAD-2480
ISN 0167            TOTAL G(3) = TOTAL G(3) + GRP G(J,3)              QAD-2490
ISN 0168            GRP G(J,4) = D GAM(J) * CONV(J)                   QAD-2500
ISN 0169            TOTAL G(4) = TOTAL G(4) + GRP G(J,4)              QAD-2510
ISN 0170            GRP G(J,2) = GRP G(J,4) / GRP G(J,3)              QAD-2520
ISN 0171            GRP G(J,5) = UD GAM(J) * FE ABS G(J)              QAD-2530
ISN 0172            TOTAL G(5) = TOTAL G(5) + GRP G(J,5)              QAD-2540
ISN 0173            GRP G(J,6) = D GAM(J) * FF ABS G(J)               QAD-2550
ISN 0174            TOTAL G(6) = TOTAL G(6) + GRP G(J,6)              QAD-2560
ISN 0175            EG AV(1) = EG AV(1) +EG(J) * GRP G(J,1)           QAD-2570
ISN 0176            EG AV(2) = EG AV(2) +EG(J) * D GAM(J)             QAD-2580
ISN 0177            BU FLX T = BU FLX T + D GAM(J)                    QAD-2590
ISN 0178        540 CONTINUE                                          QAD-2600
ISN 0179            EG AV(1) = EG AV(1) / TOTAL G(1)                  QAD-2610
ISN 0180            EG AV(2) = EG AV(2) / BU FLX T                    QAD-2620
ISN 0181            TOTAL G(2) = TOTAL G(4) / TOTAL G(3)              QAD-2630
ISN 0182            IF  ( NG INT )  600,600,550                       QAD-2640
```

```
ISN 0183        550 DO  560  K=1,NG INT                                          QAD-2650
ISN 0184            DO  560  J=1,NRGY                                            QAD-2660
ISN 0185            GRP GI(J,2*K-1) = UD GAM(J) * WT G(J,K)                      QAD-2670
ISN 0186            GRP GI(J,2*K) = D GAM(J) * WT G(J,K)                         QAD-2680
ISN 0187            TOTL GI(2*K-1) = TOTL GI(2*K-1) + GRP GI(J,2*K-1)            QAD-2690
ISN 0188            TOTL GI(2*K) = TOTL GI(2*K) + GRP GI(J,2*K)                  QAD-2700
ISN 0189        560 CONTINUE                                                     QAD-2710
ISN 0190        600 IF  ( I NEUT )  750,750,610                                  QAD-2720
ISN 0191        610 DO  650  K=1,I NEUT                                          QAD-2730
ISN 0192            J NEUT = NSET(20)                                            QAD-2740
ISN 0193            DO  620  J=1,J NEUT                                          QAD-2750
ISN 0194            GRP N(J,1,K) = F NEUT(J,K)                                   QAD-2760
ISN 0195            GRP N(J,2,K) = F NEUT(J,K) * HIST N(J)                       QAD-2770
ISN 0196            TOTAL N(1,K) = TOTAL N(1,K) + GRP N(J,2,K)                   QAD-2780
ISN 0197            GRP N(J,3,K) = GRP N(J,2,K) * EN(J)                          QAD-2790
ISN 0198            TOTAL N(2,K) = TOTAL N(2,K) + GRP N(J,3,K)                   QAD-2800
ISN 0199            GRP N(J,4,K) = GRP N(J,2,K) * CONV N(J)                      QAD-2810
ISN 0200            TOTAL N(3,K) = TOTAL N(3,K) + GRP N(J,4,K)                   QAD-2820
ISN 0201            GRP N(J,5,K) = GRP N(J,2,K) * FE ABS N(J)                    QAD-2830
ISN 0202            TOTAL N(4,K) = TOTAL N(4,K) + GRP N(J,5,K)                   QAD-2840
ISN 0203        620 CONTINUE                                                     QAD-2850
ISN 0204            EN AV(K) = TOTAL N(2,K) / TOTAL N(1,K)                       QAD-2860
ISN 0205            IF  ( NN INT )  650,650,630                                  QAD-2870
ISN 0206        630 DO  640  I=1,NN INT                                          QAD-2880
ISN 0207            DO  640  J=1,J NEUT                                          QAD-2890
ISN 0208            GRP NI(J,I,K) = GRP N(J,2,K) * WT N(J,I)                     QAD-2900
ISN 0209            TOTL NI(I,K) = TOTL NI(I,K) + GRP NI(J,I,K)                  QAD-2910
ISN 0210        640 CONTINUE                                                     QAD-2920
ISN 0211        650 CONTINUE                                                     QAD-2930
ISN 0212            TOTAL N(5,1) = AW NEUT                                       QAD-2940
ISN 0213        750 CALL  PRINT                                                  QAD-2950
                  1   ( ID(1), NBMID(1,1), UNITG(1), UNITN(1), UNITGI(1), UNITNI(1),  QAD-2960
```

```
                2UNITND(1),            WIDTHT(1,1), WIDTHG(1,1), WIDTHN(1,1), NGINT, QAD-2970
                3 NNINT,                        NORC, MRC, CDET(1), EG(1), EN(1), E QAD-2980
                4GAV(1), ENAV(1),                          TOTALG(1), TOTALN(1,1),  QAD-2990
                5GRPG(1,1),  GRPN(1,1,1),                                  TOTLGI(1 QAD-3000
                6), TOTLNI(1,1), GRPGI(1,1), GRPNI(1,1,1),                          QAD-3010
                7        NRGY, NSET(20), NERR, NSIND(1,1), NSET(12),                QAD-3020
                8           XNLMAX, XNLMIN, ISMAX(1), ISMIN(1))                     QAD-3030
ISN 0214         GO TO 1300
ISN 0215     800 GO TO  ( 820,830,840 ), MRC                                        QAD-3050
ISN 0216     820 WRITE (6     ,7)NO RC, RRC, ZRC, PHIRC, L, M, N                    QAD-3060
ISN 0217         GO TO  860                                                         QAD-3070
ISN 0218     830 WRITE (6     ,8)NO RC, XRC, YRC, ZRC, L, M, N                      QAD-3080
ISN 0219         GO TO  860                                                         QAD-3090
ISN 0220     840 WRITE (6     ,9)NO RC, XRC, YRC, ZRC, L, M, N                      QAD-3100
ISN 0221     860 WRITE (6     ,10)IERR1                                             QAD-3110
ISN 0222         NERR = NERR + 1                                                    QAD-3120
ISN 0223         IF (NERR-2) 1300,1300,880
ISN 0224     880 READ  (5     ,1)XX1, XX2, XX3, IXX                                 QAD-3140
ISN 0225         IF(IXX)890,880,880
ISN 0226     890 GO TO 100
ISN 0227         END                                                                QAD-3160
```

```
ISN 0002          SUBROUTINE INPUT
            CINPT-P  SUBROUTINE USED WITH QAD-PR                                    0020
                 1 ( N1PT, UNITG, UNITGI, WIDTHG, NGINT, NNINT, FEABSG, WTG)
ISN 0003          DIMENSION NAM(20)
ISN 0004          DIMENSION  UNIT G(18),            UNIT GI(27),                  QAD-0210
                 2   FE ABS G(30),  WIDTHG(30,3),WT G(30,3), NSIND(5,3)           QAD-0230
ISN 0005          COMMON /QADNM/  NBMID(18,3), NASET(3), RMXSEC(3), BREAK(3,2),
                 1 XNMMC(5,30,3), CONVN(10)  , HISTN(10), EN(10)  , FEABSN(10),
                 2 WIDTHN(10,2) , WTN(10,3),       UNITN(12), UNITNI(27),UNITND(3),
                 3 WIDTHT(2,2)
ISN 0006          COMMON /QADATA/
                 1 NSET  (30)   , RSO  (101)   , PHISO (101)  , ZSO  (101)   ,
                 2 NBNDZN(50)   , NCMPZN(50)   , LBD   (6,50) , NTRYZN(6,50) ,
                 3 NEQBD (50)   , ABD   (50)   , BBD   (50)   , CBD   (50)   ,
                 4 XOBD  (50)   , YOBD  (50)   , ZOBD  (50)   , DBD   (50)   ,
                 5 HYDRAT(30)   , XSECN (30)   , XSECG (20,30), BILDO (30)   ,
                 6 BILD1 (30)   , BILD2 (30)   , BILD3 (30)   , GAMEN (30)   ,
                 7 CONV  (30)   , COMP  (20,40), EG    (30)   , MATZ  (20)   ,
                 8 FL    (101)  , FN    (101)  , FM    (101)  , XISO  (2,3)  ,
                 9 ASO   , IU    , RRC    , ZRC   , PHIRC ,ALF1  , ALF2  , ALF3  ,
                 X ALF4  , EPSLN , FUDGE , NBLD ,ID(18)
ISN 0007          COMMON /STDATA/
                 1 NAME  (100)  , ENRG  (20)   , XSECO (20,100),XSECEA(20)   ,
                 2 C   (4,6,9)  , EMINBB(8)    , NAMB(12)     , XSECNT(100)  ,DCONST
ISN 0008          EQUIVALENCE  (LSO, NSET(1)), (MSO, NSET(2)), (NSO, NSET(3)),     0330
                 1   (MAT, NSET(4)), (NCOMP, NSET(5)), (NREG, NSET(6)),           0340
                 2   (NRGY, NSET(7)), (NBOUND,NSET(8)), (NS OPT, NSET(9)),        0350
                 3   (ISRC, NSET(11)), (I NEUT, NSET(12))                         0360
ISN 0009          EQUIVALENCE  ( NSET(20), J NEUT ), ( NSET(20), KK NEUT )         0370
ISN 0010          INTEGER  ZERO
ISN 0011          ZERO = 0
ISN 0012          DO 984 K=1,30
ISN 0013      984 NSET(K) = 0
ISN 0014          DO 986 K=1,6
ISN 0015          DO 985 J=1,50
ISN 0016      985 LBD(K,J) = 0
ISN 0017      986 CONTINUE
```

```
ISN 0018          1 FORMAT  ( 1H-, 5X, 21HGEOMETRY CHECK SOURCE  /  10X,                    0580
                   1   55HONE POINT AT THE COORDINATE ORIGIN WITH UNIT INTENSITY  )          0590
ISN 0019          2 FORMAT  ( 1H-, 1P9E12.4 / ( 1X, 9E12.4 ) )                              0600
ISN 0020          4 FORMAT(33H1     NO SOURCE.  RUN TERMINATED.)                             0620
ISN 0021          5 FORMAT(18A4)
ISN 0022          6 FORMAT(8(I5,I4))                                                         0640
ISN 0023          7 FORMAT(8E9.4)                                                            0650
ISN 0024          8 FORMAT(I5,I4,7E9.4)                                                      0660
ISN 0025          9 FORMAT(6H1     18A4/13H0     CONTROL16I6/ 25X, 14I6 )                   0670
ISN 0026         10 FORMAT  ( 1H1 )                                                          0680
ISN 0027         11 FORMAT(18H0 ZONE  BNDS  COMP6(12H   BND    PK)//)                      0690
ISN 0028         12 FORMAT(15I6)                                                             0700
ISN 0029         13 FORMAT(27H0  BND    EQ  PARAMETERS...//)                                0710
ISN 0030         14 FORMAT(2I6,1P7E12.4)                                                     0720
ISN 0031         15 FORMAT (4H1XNM,5X,A4, 16H BUILDUP IS USED//
                   X        81H0    GRP         EPS/E      DELTA/K      A1/B0        A2/B    0730
                   11        A3/B2        A4/B3//)                                           0740
ISN 0032         16 FORMAT (I7,5X1P9E12.4,-1PF7.2)
ISN 0033         17 FORMAT (10HL  GRP/MAT  9(4X,A4,4X))
ISN 0034         18 FORMAT (10H1 COMP/MAT  9(4X,A4,4X))
ISN 0035        185 FORMAT  (12X, 1P9E12.4)                                                 0780
ISN 0036        100 FORMAT(12H0     SOURCE1P8E12.4)                                         0790
ISN 0037        101 FORMAT(12H0          R1P8E12.4/(12X8E12.4))                             0800
ISN 0038        102 FORMAT(12H0          Z1P8E12.4/(12X8E12.4))                             0810
ISN 0039        103 FORMAT(12H0        PHI1P8E12.4/(12X8E12.4))                             0820
ISN 0040        104 FORMAT(12H0       F(L)1P8E12.4/(12X8E12.4))                             0830
ISN 0041        105 FORMAT(12H0       F(M)1P8E12.4/(12X8E12.4))                             0840
ISN 0042        106 FORMAT(12H0       F(N)1P8E12.4/(12X8E12.4))                             0850
ISN 0043        107 FORMAT  (5E12.8)                                                        0860
ISN 0044        109 FORMAT  (1H0,27X,29HNEUTRON REMOVAL CROSS-SECTION)                      0870
ISN 0045        110 FORMAT  (1H0,27X,29HGAMMA ATTENUATION COEFFICIENT)                      0880
ISN 0046        111 FORMAT  (1H1,25X,30HNEUTRON CURVE FIT COEFFICIENTS)                     0890
ISN 0047        112 FORMAT  (1H0,10X,32HREFERENCE MATERIAL CROSS-SECTION,1PE12.4)           0900
ISN 0048        113 FORMAT  (1H0,10X,11HBREAK POINT, 2F12.4 )                               0910
ISN 0049        114 FORMAT  (7X,1P5E12.4)                                                   0920
ISN 0050        115 FORMAT  ( 1H1, 10X, 18A4 / 10X, 8HI NEUT -, I3, 10X, 8HJ NEUT -,
                   1   I3, 10X, 11HNA SET(L) -, I3 )                                        0940
ISN 0051        116 FORMAT  (1H-, 10X, 36HNEUTRON INTEGRAL WEIGHTING FACTORS -/             0950
                   1    (10X, 1P5E16.8))                                                    0960
```

```
ISN 0052        117 FORMAT  (1H-, 10X, 29HNEUTRON INTEGRATING FACTORS -/                0970
                  1   (10X, 1P5E16.8))                                                  0980
ISN 0053        118  FORMAT  ( 1H0, 27X, 25HMATERIAL HYDROGEN DENSITY )                0990
ISN 0054        900 FORMAT( 12Z10 )
              C                                                                         1000
              C                                                                         1010
ISN 0055            READ  (5      ,5     ,END = 666)  ID
ISN 0056            READ  (5      ,6)(NSET(I),I=1,16)                                 1030
ISN 0057            NG INT = N SET(16)
ISN 0058            IF(NSET(12).GT.0)  NSET(12)=3
ISN 0060            INEUT=NSET(12)
ISN 0061            NSET(19)= 1-NSET(12)
ISN 0062            NNINT=3
ISN 0063            NSET(22)=3
ISN 0064            JNEUT=10
ISN 0065            N SET(21) = NG INT                                                  1120
ISN 0066            N SET(18) = N SET(9) - 9                                            1140
ISN 0067            IF  ( N SET(9) - 9 )  5997,5997,5996                                1150
ISN 0068       5996 N SET(9) = N SET(9) - 10                                            1160
ISN 0069       5997 IF  ( N SET(19) )  5999,5999,5998                                   1170
ISN 0070       5998 N SET(22) = 0                                                       1180
ISN 0071       5999 WRITE (6      ,9)ID, N SET                                          1190
              C                                                                         1200
ISN 0072            ISRC=NSET(11)                                                       1210
ISN 0073            IF(ISRC)19,19,20                                                    1220
ISN 0074         19 IF(ASO)191,191,30                                                   1230
ISN 0075        191 WRITE (6      ,4)                                                  1240
ISN 0076            CALL EXIT                                                           1250
ISN 0077         20 LU=LSO+1                                                            1260
ISN 0078            MU=MSO+1                                                            1270
ISN 0079            NU=NSO+1                                                            1280
ISN 0080         24 READ  (5      ,7)ASO, (( XISO(I,J), I=1,2), J=1,3 )                1290
ISN 0081            WRITE (6      ,100)ASO, (( XISO(I,J), I=1,2 ), J=1,3 )             1300
ISN 0082         25 READ  (5      ,7)(RSO(L),L=1,LU)                                   1310
ISN 0083            WRITE (6      ,101)(RSO(L),L=1,LU)                                 1320
ISN 0084            READ  (5      ,7)(ZSO(M),M=1,MU)                                   1330
ISN 0085            WRITE (6      ,102)(ZSO(M),M=1,MU)                                 1340
```

```
ISN 0086          READ  (5      ,7)(PHISO(N),N=1,NU)                                  1350
ISN 0087          WRITE (6      ,103)(PHISO(N),N=1,NU)                                1360
ISN 0088          GO TO(30,22),ISRC                                                   1370
ISN 0089       22 READ  (5      ,7)(FL(L),L=1,LU)                                     1380
ISN 0090          WRITE (6      ,104)(FL(L),L=1,LU)                                   1390
ISN 0091          READ  (5      ,7)(FM(M),M=1,MU)                                     1400
ISN 0092          WRITE (6      ,105)(FM(M),M=1,MU)                                   1410
ISN 0093          READ  (5      ,7)(FN(N),N=1,NU)                                     1420
ISN 0094          WRITE (6      ,106)(FN(N),N=1,NU)                                   1430
ISN 0095       30 N99 = 6                                                             1440
ISN 0096          IF  ( N SET(18) )  222,222,221                                      1450
ISN 0097      221 READ  (5      ,7)( GAMEN(I), I=1,NRGY )                             1460
ISN 0098          WRITE (6      ,9876)( GAMEN(I), I=1,NRGY )                          1470
ISN 0099     9876 FORMAT  ( 1H0, 10X, 21HGAMMA SOURCE SPECTRUM / ( 3X, 1P7E16.4 ) )  1480
            C                                                                        1490
ISN 0100      222 IF  ( NSET(6) )  301,301,31                                        1500
ISN 0101      301 NSET(N99) = IABS( NSET(N99) )                                      1510
ISN 0102          GO TO 1000
ISN 0103      31  CONTINUE                                                           1530
ISN 0104          DO 32 J=1,NREG                                                     1540
ISN 0105          READ  (5     ,6) IU,NCMPZN(J)
ISN 0106          NBNDZN(J)=IU                                                       1560
ISN 0107          XIU=IU
ISN 0108          IUAB=ABS (XIU)
ISN 0109       32 READ  (5     ,6) (LBD(I,J),NTRYZN(I,J),I=1,IUAB)
ISN 0110       60 WRITE (6      ,11)                                                1570
ISN 0111          DO 62 J=1,NREG                                                     1580
ISN 0112          IU=NBNDZN(J)                                                       1590
ISN 0113          XIU=IU
ISN 0114          IUAB=ABS (XIU)
ISN 0115       62 WRITE (6     ,12)J,IU,NCMPZN(J),(LBD(I,J),NTRYZN(I,J),I=1,IUAB)
ISN 0116          N99 = 8                                                            1610
ISN 0117          IF  ( NSET(8) )  301,301,34                                        1620
ISN 0118      34  CONTINUE                                                           1630
ISN 0119          READ  (5      ,8)(K, NEQBD(K),ABD(K),BBD(K),CBD(K),XOBD(K),    YOBD  1640
                 1(K),ZOBD(K),DBD(K) ,K=1,NBOUND)                                    1650
```

```
ISN 0120          WRITE (6      ,13)                                                    1660
ISN 0121          WRITE (6      ,14)(I,NEQBD(I),ABD(I),BBD(I),CBD(I),XOBD(I),   YOBD(I  1670
                 1),ZOBD(I),DBD(I),I=1,NBOUND)                                          1680
ISN 0122          N99 = 5                                                               1690
ISN 0123          IF  ( NSET(5) )  301,301,40                                           1700
ISN 0124     40   CONTINUE                                                              1710
ISN 0125          READ (5,6) NBLD,(MATZ(I),I=1,MAT)
ISN 0126          DO 44 I=1,MAT
ISN 0127          L = MATZ(I)
ISN 0128          NAM(I) = NAME(L)
ISN 0129          HYDRAT(I) = 0.0
ISN 0130          IF (L.EQ.1) HYDRAT(I)=1.0
ISN 0132       44 XSECN(I) = XSECNT(L)
ISN 0133          DO 45 J=1,NCOMP                                                       1720
ISN 0134       45 READ  (5      ,7)(COMP(I,J),I=1,MAT)                                  1730
ISN 0135          DO  69  K=1,MAT,9                                                     1740
ISN 0136          IU=  MINO(K+8,MAT)                                                    1750
ISN 0137          WRITE (6,18) (NAM(I),I=K,IU)
ISN 0138          DO 69 J=1,NCOMP                                                       1770
ISN 0139       69 WRITE (6      ,16)J,(COMP(I,J),I=K,IU)                                1780
ISN 0140          N99 = 4                                                               1790
ISN 0141          IF  ( NSET(4) )  301,301,43                                           1800
ISN 0142     43   CONTINUE                                                              1810
ISN 0143          READ  (5      ,7)( EG(K), K=1,NRGY )                                  2400
ISN 0144          CALL XSECQD
ISN 0145          DO 70 K=1,MAT,9                                                       1840
ISN 0146          IU=MINO(K+8,MAT)                                                      1850
ISN 0147          WRITE (6,17) (NAM(I),I=K,IU)
ISN 0148          WRITE (6      ,109)                                                   1870
ISN 0149          WRITE (6      ,185)(XSECN(I), I=K,IU)                                 1880
ISN 0150          WRITE (6      ,118)                                                   1890
ISN 0151          WRITE (6      ,185)( HYDRAT(I), I=K,IU )                              1900
ISN 0152          WRITE (6      ,110)                                                   1910
ISN 0153          DO 70 J=1,NRGY                                                        1920
ISN 0154       70 WRITE (6,16) J,(XSECG(I,J),I=K,IU),EG(J)
ISN 0155          IF  ( N SET(18) )  6551,6551,6552                                     1940
ISN 0156     6551 READ  (5      ,7)(GAMEN(I),I=1,NRGY)                                  1950
ISN 0157     6552 READ  (5      ,7)(CONV(I),I=1,NRGY)                                   1960
```

```
ISN 0158          WRITE (6      ,15)    NAMB(NBLD)
ISN 0159          DO 65 I=1,NRGY
ISN 0160       65 WRITE (6      ,16)I,GAMEN(I),CONV(I),BILD0(I),BILD1(I),BILD2(I),BIL
                 1D3(I)
ISN 0161          ALF1= 0.2655E-7
            C     ALF1= 0.2655E-7  (RAD/SEC)/(NEUT/SEC) = .653E-7 RAD/FISSION
            C         = 2.35E-4(RAD/HR)/(FISS/SEC) ... 2.35E-4(REP/HR)/(FISS/SEC)
            C                                          AN OLD WESTINGHOUSE NUMBER
            C                                          USED WITH 0.29, 0.83, 0.58
ISN 0162          ALF2 = .29
ISN 0163          ALF3 = .83
ISN 0164          ALF4 = .58
ISN 0165          EPSLN = 1.0E-6
ISN 0166          FUDGE = 1.0E-3
ISN 0167          WRITE (6      ,16)ZERO,EPSLN,FUDGE,ALF1,ALF2,ALF3,ALF4
            C
ISN 0168          IF(INEUT.LE.0)  GO TO 7778
ISN 0170          KER PL = 0
ISN 0171          KKNEUT=JNEUT
ISN 0172          DO  540  L=1,I NEUT
ISN 0173          WRITE (6      ,115)( NBMID(K,L), K=1,18 ), I NEUT, J NEUT,    NA SE
                 1T(L)
ISN 0174          WRITE (6      ,112)RM XSEC(L)
ISN 0175          WRITE (6      ,113)BREAK(L,1), BREAK(L,2)
ISN 0176          NN SET = J NEUT * NA SET(L)
ISN 0177          DO  530  J=1,NN SET
ISN 0178          WRITE (6      ,114)( XN MM C(I,J,L), I=1,5 )
ISN 0179      530 CONTINUE
ISN 0180      540 CONTINUE
ISN 0181          WRITE (6      ,116)( CONV N(K), K=1,KK NEUT )
ISN 0182          WRITE (6      ,117)(HIST N(K), K=1,KK NEUT)
ISN 0183     9000 FORMAT  ( 1H+, 20X, 18A4 / ( 21X, 18A4 ) )
ISN 0184     9001 FORMAT  ( 1H-, 3HEG- )
ISN 0185     9002 FORMAT  ( 1H-, 3HEN- )
ISN 0186     9003 FORMAT  ( 1H-, 9HFE ABS G- )
ISN 0187     9004 FORMAT  ( 1H-, 9HFE ABS N- )
ISN 0188     9005 FORMAT  ( 1H-, 8HWIDTH T- )
ISN 0189     9006 FORMAT  ( 1H-, 8HWIDTH G- )
```

```
ISN 0190      9007 FORMAT  ( 1H-, 8HWIDTH N- )                                  2320
ISN 0191      9008 FORMAT  ( 1H-, 7HUNIT G- )                                   2330
ISN 0192      9009 FORMAT  ( 1H-, 7HUNIT N- )                                   2340
ISN 0193      9010 FORMAT  ( 1H-, 4HWT G, 5X, 4HSET , I2 )                      2350
ISN 0194      9011 FORMAT  ( 1H-, 4HWT N, 5X, 4HSET , I2 )                      2360
ISN 0195      9012 FORMAT  ( 1H-, 8HUNIT GI- )                                  2370
ISN 0196      9013 FORMAT  ( 1H-, 8HUNIT NI- )                                  2380
ISN 0197      7778 WRITE (6      ,10)
ISN 0198           WRITE (6      ,9001)                                         2410
ISN 0199           WRITE (6      ,2)( EG(K), K=1,NRGY )                         2420
ISN 0200           READ  (5      ,7)( FE ABS G(K), K=1,NRGY )                   2430
ISN 0201           WRITE (6      ,9003)                                         2440
ISN 0202           WRITE (6      ,2)( FE ABS G(K), K=1,NRGY )                   2450
ISN 0203           WRITE (6      ,9002)                                         2470
ISN 0204           WRITE (6      ,2)( EN(K), K=1,KK NEUT )                      2480
ISN 0205           WRITE (6      ,9004)                                         2500
ISN 0206           WRITE (6      ,2)( FE ABS N(K), K=1,KK NEUT )                2510
ISN 0207           READ  (5      ,5) ( WIDTH T(1,J), J=1,2 )
ISN 0208           WRITE (6      ,9005)                                         2530
ISN 0209           WRITE (6      ,9000)(( WIDTH T(I,J), J=1,2 ), I=1,2 )        2540
ISN 0210           READ  (5      ,5)(( WIDTH G(J,I), I=1,3 ), J=1,NRGY )        2550
ISN 0211           WRITE (6      ,9006)                                         2560
ISN 0212           WRITE (6      ,9000)(( WIDTH G(J,I), I=1,3 ), J=1,NRGY )     2570
ISN 0213           WRITE (6      ,9007)                                         2590
ISN 0214           WRITE (6      ,9000)(( WIDTH N(J,I), I=1,2 ), J=1, KKNEUT)   2600
ISN 0215           READ(5  ,5) ( UNITG(3*I-2), UNITG(3*I-1), UNITG(3*I),          2610
                  1 UNITG(3*I+7), UNITG(3*I+8), UNITG(3*I+9), I=1,3 )             2620
ISN 0216           WRITE (6      ,9008)                                         2630
ISN 0217           WRITE (6      ,9000)( UNIT G(I), I=1,18 )                    2640
ISN 0218           WRITE (6      ,9009)                                         2670
ISN 0219           WRITE (6      ,9000)( UNIT N(I), I=1,12), ( UNIT ND(I),      I=1,3  2680
                  1)                                                              2690
ISN 0220           IF  ( NG INT )  630,630,610                                   2700
ISN 0221      610  DO  620  I=1,NG INT                                           2710
ISN 0222           READ  (5      ,7)( WT G(J,I), J=1,NRGY )                     2720
ISN 0223           WRITE (6      ,9010)I                                        2730
ISN 0224           WRITE (6      ,2)( WT G(J,I), J=1,NRGY )                     2740
```

```
ISN 0225        620 CONTINUE                                                          2750
ISN 0226            READ  (5      ,5)( UNIT GI(2*I-1), UNIT GI(2*I),              UNIT  2760
                   1 GI(2*I+5), UNIT GI(2*I+6), UNIT GI(2*I+11),                    UNIT  2770
                   2 GI(2*I+12), I=1,3 )                                                  2780
ISN 0227            WRITE (6      ,9012)                                                  2790
ISN 0228            WRITE (6      ,9000)( UNIT GI(I), I=1,27 )                            2800
ISN 0229       630  IF  ( INEUT)     1000,1000,640
ISN 0230       640  DO  650  I=1,NN INT                                                   2820
ISN 0231            WRITE (6      ,9011)I                                                 2830
ISN 0232            WRITE (6      ,2)( WT N(J,I), J=1,KK NEUT )                           2850
ISN 0233       650  CONTINUE                                                              2860
ISN 0234            WRITE (6      ,9013)                                                  2900
ISN 0235            WRITE (6      ,9000)( UNIT NI(I), I=1,27 )                            2910
ISN 0236      1000  RETURN
ISN 0237       666  CALL EXIT
ISN 0238            RETURN
ISN 0239             END                                                                  2930
```

```
ISN 0002          SUBROUTINE  LENGTH                                                    LEN-0020
            CLEN-N   SUBROUTINE USED WITH QAD-NM AND QAD-PR                             LEN-0010
                 1   ( SMAT, XRELL, SSO, XSO, YSO, ZSO, XRC, YRC, ZRC, IERR )           LEN-0030
ISN 0003          DIMENSION R(6),SMAT(20)                                               LEN-0040
ISN 0004          COMMON /QADATA/
                 1 NSET  (30)    , RSO  (101)    , PHISO (101)   , ZZZ  (101)    ,
                 2 NBNDZN(50)    , NCMPZN(50)    , LBD   (6,50)  , NTRYZN(6,50)  ,
                 3 NEQBD (50)    , ABD   (50)    , BBD   (50)    , CBD   (50)    ,
                 4 XOBD  (50)    , YOBD  (50)    , ZOBD  (50)    , DBD   (50)    ,
                 5 HYDRAT(30)    , XSECN (30)    , XSECG (20,30), BILDO (30)     ,
                 6 BILD1 (30)    , BILD2 (30)    , BILD3 (30)    , GAMEN (30)    ,
                 7 CONV  (30)    , COMP  (20,40), EG    (30)    , MATZ  (20)    ,
                 8 FL    (101)   , FN    (101)   , FM    (101)   , XISO  (2,3)   ,
                 9 ASO   , IU    , RRC   , ZRV   , PHIRC ,ALF1   , ALF2   , ALF3   ,
                 X ALF4  , EPSLN , FUDGE , NBLD  ,ID(18)
ISN 0005          EQUIVALENCE  (LSO, NSET(1)), (MSO, NSET(2)), (NSO, NSET(3)),          LEN-0310
                 1   (MAT, NSET(4)), (NCOMP, NSET(5)), (NREG, NSET(6)),                  LEN-0320
                 2   (NRGY, NSET(7)), (NBOUND,NSET(8)), (NS OPT, NSET(9)),               LEN-0330
                 3   ( NZSO, NSET(10) ), ( ISRC, NSET(11) ), ( I NEUT, NSET(12) )        LEN-0340
ISN 0006        5 FORMAT(67H0   ZONE      BOUNDARY    DISTANCE        X            Y    LEN-0530
                 1          Z)                                                          LEN-0540
ISN 0007        6 FORMAT(2(I7,5X),1P6E12.4)                                             LEN-0550
ISN 0008          X REL L = 0.0                                                         LEN-0560
ISN 0009        9 CALL SLITET(4,K000FX)                                                 LEN-0570
ISN 0010          GO TO(10,10),K000FX                                                   LEN-0580
ISN 0011       10 CALL SLITET(1,K000FX)                                                 LEN-0590
ISN 0012          GO TO(101,102),K000FX                                                 LEN-0600
ISN 0013      101 CALL SLITE (1)                                                        LEN-0610
ISN 0014          WRITE (6      ,5)                                                     LEN-0620
ISN 0015      102 DO 11 M=1,MAT                                                         LEN-0630
ISN 0016       11 SMAT(M)=0.0                                                           LEN-0640
ISN 0017          X=XSO                                                                 LEN-0650
ISN 0018          Y=YSO                                                                 LEN-0660
ISN 0019          Z=ZSO                                                                 LEN-0670
ISN 0020          ALPHA=XRC-X                                                           LEN-0680
ISN 0021          BETA=YRC-Y                                                            LEN-0690
ISN 0022          GAMMA=ZRC-Z                                                           LEN-0700
ISN 0023          SRC=SQRT(ALPHA**2+BETA**2+GAMMA**2)                                   LEN-0710
```

```
ISN 0024          ALPHA =ALPHA/SRC                                        LEN-0720
ISN 0025          GAMMA=GAMMA/SRC                                         LEN-0730
ISN 0026          BETA=BETA/SRC                                           LEN-0740
ISN 0027          SSO=SRC                                                 LEN-0750
ISN 0028          SMIN=FUDGE                                              LEN-0760
ISN 0029          NP=NZSO                                                 LEN-0770
ISN 0030      100 X=X+ALPHA*SMIN                                          LEN-0780
ISN 0031          Y=Y+BETA*SMIN                                           LEN-0790
ISN 0032          Z=Z+GAMMA*SMIN                                          LEN-0800
ISN 0033          SRC=SRC-SMIN                                            LEN-0810
ISN 0034       20 IL=NP                                                   LEN-0820
ISN 0035          IU=NREG                                                 LEN-0830
ISN 0036       25 DO 42 I=IL,IU                                           LEN-0840
ISN 0037          XJU=NBNDZN(I)
ISN 0038          JU=ABS (XJU)
ISN 0039          DO 41 J =1,JU                                           LEN-0860
ISN 0040          XK=LBD(J,I)
ISN 0041          K=ABS (XK)
ISN 0042          NEQ=NEQBD(K)                                            LEN-0880
ISN 0043          GO TO(31,32,33,34,35,36),NEQ                            LEN-0890
ISN 0044       31 R(J)=X*(ABD(K)*X+XOBD(K))+Y*(BBD(K)*Y+YOBD(K))          LEN-0900
                 1+Z*(CBD(K)*Z+ZOBD(K))-DBD(K)                            LEN-0910
ISN 0045          GO TO 40                                                LEN-0920
ISN 0046       32 R(J)=ABD(K)*(X-XOBD(K))**2+BBD(K)*(Y-YOBD(K))**2        LEN-0930
                 1+CBD(K)*(Z-ZOBD(K))**2-DBD(K)                           LEN-0940
ISN 0047          GO TO 40                                                LEN-0950
ISN 0048       33 R(J)=(X-XOBD(K))**2+(Y-YOBD(K))**2-DBD(K)               LEN-0960
ISN 0049          GO TO 40                                                LEN-0970
ISN 0050       34 R(J)=X-DBD(K)                                           LEN-0980
ISN 0051          GO TO 40                                                LEN-0990
ISN 0052       35 R(J)=Y-DBD(K)                                           LEN-1000
ISN 0053          GO TO 40                                                LEN-1010
ISN 0054       36 R(J)=Z-DBD(K)                                           LEN-1020
ISN 0055       40 IF(ISIGN(1,LBD(J,I))*R(J)) 41,41,42
ISN 0056       41 CONTINUE                                                LEN-1040
ISN 0057          GO TO 50                                                LEN-1050
```

```
ISN 0058          42 CONTINUE                                                    LEN-1060
ISN 0059             IF(IU-NP)45,43,43                                           LEN-1070
ISN 0060          43 IL=1                                                        LEN-1080
ISN 0061             IU=NP-1                                                     LEN-1090
ISN 0062             GO TO 25                                                    LEN-1100
ISN 0063          45 IERR=1                                                      LEN-1110
ISN 0064             CALL SLITET(1,K000FX)                                       LEN-1120
ISN 0065              GO TO(300,46),K000FX                                       LEN-1130
ISN 0066          46 CALL SLITE (1)                                              LEN-1140
ISN 0067             GO TO 9                                                     LEN-1150
            C                                                                    LEN-1160
ISN 0068          50 SMIN=SRC                                                    LEN-1170
ISN 0069             KK=0                                                        LEN-1180
ISN 0070             IF(NBNDZN(I))99,99,51                                       LEN-1190
ISN 0071          51 DO 98 J=1,JU                                                LEN-1200
ISN 0072             K1=LBD(J,I)
ISN 0073             XK=LBD(J,I)
ISN 0074             K=ABS (XK)
ISN 0075             NEQ=NEQBD(K)                                                LEN-1220
ISN 0076             GO TO(61,62,63,64,65,66),NEQ                                LEN-1230
ISN 0077          61 E=(ABD(K)*X+XOBD(K)/2.0)*ALPHA+(BBD(K)*Y+YOBD(K)/2.0)*BETA  LEN-1240
                   1  +(CBD(K)*Z+ZOBD(K)/2.0)*GAMMA                              LEN-1250
ISN 0078             GO TO 620                                                   LEN-1260
ISN 0079          62 E=ABD(K)*ALPHA*(X-XOBD(K))+BBD(K)*BETA*(Y-YOBD(K))          LEN-1270
                  1+CBD(K)*GAMMA*(Z-ZOBD(K))                                     LEN-1280
ISN 0080         620 H=ABD(K)*ALPHA**2+BBD(K)*BETA**2+CBD(K)*GAMMA**2            LEN-1290
ISN 0081             GO TO 70                                                    LEN-1300
ISN 0082          63 E=ALPHA*(X-XOBD(K))+BETA*(Y-YOBD(K))                        LEN-1310
ISN 0083             H=1.0-GAMMA**2                                              LEN-1320
ISN 0084             GO TO 70                                                    LEN-1330
ISN 0085          64 E=ALPHA/2.0                                                 LEN-1340
ISN 0086             GO TO 660                                                   LEN-1350
ISN 0087          65 E=BETA/2.0                                                  LEN-1360
ISN 0088             GO TO 660                                                   LEN-1370
ISN 0089          66 E =GAMMA/2.0                                                LEN-1380
ISN 0090         660 H=0.0                                                       LEN-1390
ISN 0091          70 IF(H)71,75,75                                               LEN-1400
```

```
ISN 0092          71 H=-H                                                LEN-1410
ISN 0093             E=-E                                                LEN-1420
ISN 0094             R(J)=-R(J)                                          LEN-1430
ISN 0095             K1=-K1
ISN 0096          75 IF(H-EPSLN)76,76,85                                 LEN-1450
ISN 0097          76 IF(R(J))80,77,80                                    LEN-1460
ISN 0098          77 IERR=2                                              LEN-1470
ISN 0099             CALL SLITET(1,KOOOFX)                               LEN-1480
ISN 0100              GO TO(300,78),KOOOFX                               LEN-1490
ISN 0101          78 CALL SLITE (1)                                      LEN-1500
ISN 0102             GO TO 9                                             LEN-1510
ISN 0103          80 IF(ABS(E)-EPSLN)98,98,81                            LEN-1520
ISN 0104          81 SBD=-R(J)/2.0/E                                     LEN-1530
ISN 0105             IF(SBD)98,98,95                                     LEN-1540
ISN 0106          85 IF(R(J))86,77,90                                    LEN-1550
ISN 0107          86 IF(H*SMIN**2+2.0*E*SMIN+R(J))98,98,87               LEN-1560
ISN 0108          87 QUAD=E**2-H*R(J)                                    LEN-1570
ISN 0109             GO TO 92                                            LEN-1580
ISN 0110          90 IF(E)91,98,98                                       LEN-1590
ISN 0111          91 QUAD=E**2-H*R(J)                                    LEN-1600
ISN 0112             IF(QUAD-EPSLN)98,98,92                              LEN-1610
ISN 0113          92 S1 = K1
ISN 0114             SBD = (-E+SIGN(SQRT(QUAD),S1))/H
ISN 0115          95 IF(SBD-SMIN)96,98,98                                LEN-1630
ISN 0116          96 CALL SLITE (4)                                      LEN-1640
ISN 0117             SMIN=SBD                                            LEN-1650
ISN 0118             KK=K1
ISN 0119             NP =NTRYZN(J,I)                                     LEN-1670
ISN 0120          98 CONTINUE                                            LEN-1680
            C                                                            LEN-1690
ISN 0121          99 SMIN=SMIN+FUDGE                                     LEN-1700
ISN 0122             CALL SLITET(1,KOOOFX)                               LEN-1710
ISN 0123              GO TO(991,992),KOOOFX                              LEN-1720
ISN 0124         991 CALL SLITE (1)                                      LEN-1730
ISN 0125             WRITE (6      ,6)I,KK,SMIN,X,Y,Z                    LEN-1740
ISN 0126         992 N=NCMPZN(I)                                         LEN-1750
ISN 0127             DO 994 M=1,MAT                                      LEN-1760
ISN 0128             SMAT(M) = SMAT(M) + SMIN * COMP(M,N)                LEN-1770
```

```
ISN 0129          X REL L = X REL L + SMIN * COMP(M,N) * X SEC N(M)          LEN-1780
ISN 0130      994 CONTINUE                                                   LEN-1790
ISN 0131          CALL SLITET(4,K000FX)                                      LEN-1800
ISN 0132           GO TO(100,105),K000FX                                     LEN-1810
ISN 0133      105 IERR=0                                                     LEN-1820
ISN 0134      300 CALL SLITET(1,K000FX)                                      LEN-1830
ISN 0135           GO TO(301,301),K000FX                                     LEN-1840
ISN 0136      301 CALL SLITET(4,K000FX)                                      LEN-1850
ISN 0137           GO TO(1000,1000),K000FX                                   LEN-1860
ISN 0138     1000 RETURN                                                     LEN-1870
ISN 0139           END                                                       LEN-1880
```

```
ISN 0002          SUBROUTINE  KERNEL                                          KER-0020
            CKER-P   SUBROUTINE USED WITH QAD-PR                              KER-0010
                 1   ( S MAT, X RELL, A NEUT, AW A, A GAM, UA GAM, N ERR )    KER-0030
ISN 0003          DIMENSION   SMAT(20), ANEUT(16,5), AGAM(30), UAGAM(30)     KER-0040
ISN 0004          COMMON /QADNM/  NBMID(18,3), NASET(3), RMXSEC(3), BREAK(3,2),
                 1 XNMMC(5,30,3), CONVN(10)  , HISTN(10), EN(10)  , FEABSN(10),
                 2 WIDTHN(10,2) , WTN(10,3),       UNITN(12), UNITNI(27),UNITND(3),
                 3 WIDTHT(2,2)
ISN 0005          COMMON /QADATA/
                 1 NSET  (30)   , RSO  (101)   , PHISO (101)  , ZSO  (101)   ,
                 2 NBNDZN(50)   , NCMPZN(50)   , LBD   (6,50) , NTRYZN(6,50) ,
                 3 NEQBD (50)   , ABD   (50)   , BBD   (50)   , CBD   (50)   ,
                 4 XOBD  (50)   , YOBD  (50)   , ZOBD  (50)   , DBD   (50)   ,
                 5 HYDRAT(30)   , XSECN (30)   , XSECG (20,30), BILDO (30)   ,
                 6 BILD1 (30)   , BILD2 (30)   , BILD3 (30)   , GAMEN (30)   ,
                 7 CONV  (30)   , COMP  (20,40), EG    (30)   , MATZ  (20)   ,
                 8 FL    (101)  , FN    (101)  , FM    (101)  , XISO  (2,3)  ,
                 9 ASO   , IU    , RRC    , ZRC   , PHIRC ,ALF1  , ALF2  , ALF3  ,
                 X ALF4  , EPSLN , FUDGE , NBLD ,ID(18)
ISN 0006          EQUIVALENCE  (LSO, NSET(1)), (MSO, NSET(2)), (NSO, NSET(3)),   KER-0300
                 1   (MAT, NSET(4)), (NCOMP, NSET(5)), (NREG, NSET(6)),         KER-0310
                 2   (NRGY, NSET(7)), (NBOUND,NSET(8)), (NS OPT, NSET(9)),      KER-0320
                 3   (ISRC, NSET(11)), (I NEUT, NSET(12))                       KER-0330
ISN 0007          J NEUT = NSET(20)                                             KER-0510
ISN 0008      100 IF  ( I NEUT )  300,300,200                                   KER-0520
ISN 0009      200 DO  250  L=1,I NEUT                                           KER-0530
ISN 0010          L NEUT = 0                                                    KER-0540
ISN 0011          TAU = X RELL / RM XSEC(L)                                     KER-0550
ISN 0012          IF  ( TAU - BREAK(L,1) )  240,240,210                         KER-0560
ISN 0013      210 IF  ( TAU - BREAK(L,2) )  220,220,230                         KER-0570
ISN 0014      220 L NEUT = 1                                                    KER-0580
ISN 0015          GO TO  240                                                    KER-0590
ISN 0016      230 L NEUT =2                                                     KER-0600
ISN 0017      240 DO  250  I=1,J NEUT                                           KER-0610
ISN 0018          N = NA SET(L) * ( I - 1 ) + 1 + L NEUT                        KER-0620
ISN 0019          A NEUT(I,L) = EXP((((  XN MM C(1,N,L)   * TAU + XN MM C(2,N,L) ) *  KER-0630
                 1TAU                  + XN MM C(3,N,L) ) * TAU + XN MM C(4,N,L) ) *  KER-0640
                 2TAU                  + XN MM C(5,N,L) )                        KER-0650
```

```
ISN 0020        250 CONTINUE                                                    KER-0670
ISN 0021            S HYD = 0.0                                                 KER-0680
ISN 0022            DO  260  M=1,MAT                                            KER-0690
ISN 0023            S HYD = S HYD + HYDRAT(M) * S MAT(M)                        KER-0700
ISN 0024        260 CONTINUE                                                    KER-0710
ISN 0025            S HYD = S HYD / 0.1119                                      KER-0720
ISN 0026            IF  ( S HYD )  270,270,280                                  KER-0730
ISN 0027        270 AW A = ALF1 * EXP( - X RELL )                               KER-0740
ISN 0028            N ERR = N ERR + 1                                           KER-0750
ISN 0029            GO TO  300                                                  KER-0760
ISN 0030        280 AW A = ALF1 * S HYD ** ALF2 *                               KER-0770
                   1   EXP( 0.0669 * S HYD - XRELL - ALF3 * S HYD ** ALF4 )     KER-0780
ISN 0031        300 DO  400  J=1,NRGY                                           KER-0790
ISN 0032            AG = 0.0                                                    KER-0800
ISN 0033            DO  350  I=1,MAT                                            KER-0810
ISN 0034        320 AG=AG+SMAT(I)*XSECG(I,J)                                    KER-0820
ISN 0035        350 CONTINUE                                                    KER-0830
ISN 0036        360 U GAM = EXP( -AG )                                          KER-0840
ISN 0037        370 GAM = (( BILD3(J) * AG + BILD2(J) ) * AG + BILD1(J) ) * AG  KER-0850
                   1   + BILD0(J)                                               KER-0860
ISN 0038        380 A GAM(J) = UGAM * GAM                                       KER-0870
ISN 0039        390 UA GAM(J) = U GAM                                           KER-0880
ISN 0040        400 CONTINUE                                                    KER-0890
ISN 0041        1000 RETURN                                                     KER-0900
ISN 0042            END                                                         KER-0910
```

```
ISN 0002          SUBROUTINE  SOURCE                                          CSC 0020
            CCSC     SUBROUTINE USED WITH QAD-NM AND QAD-PR                   CSC 0010
ISN 0003          DIMENSION  FT(3), ISO(3)                                    CSC 0040
ISN 0004          COMMON /QADATA/
                 1 NSET  (30)   , CSO  (101,3)  ,
                 2 NBNDZN(50)   , NCMPZN(50)   , LBD   (6,50) , NTRYZN(6,50) ,
                 3 NEQBD (50)   , ABD   (50)   , BBD   (50)   , CBD   (50)   ,
                 4 XOBD  (50)   , YOBD  (50)   , ZOBD  (50)   , DBD   (50)   ,
                 5 HYDRAT(30)   , XSECN (30)   , XSECG (20,30), BILDO (30)   ,
                 6 BILD1 (30)   , BILD2 (30)   , BILD3 (30)   , GAMEN (30)   ,
                 7 CONV  (30)   , COMP  (20,40), EG    (30)   , MATZ  (20)   ,
                 8 F     (101,3),                               XISO  (2,3)  ,
                 9 ASO   , IU    , RRC    , ZRC   , PHIRC ,ALF1  , ALF2  , ALF3  ,
                 X ALF4  , EPSLN , FUDGE , NBLD ,ID(18)
ISN 0005          EQUIVALENCE  (LSO, NSET(1)), (MSO, NSET(2)), (NSO, NSET(3)),  CSC 0120
                 1   (MAT, NSET(4)), (NCOMP, NSET(5)), (NREG, NSET(6)),         CSC 0130
                 2   (NRGY, NSET(7)), (NBOUND,NSET(8)), (NS OPT, NSET(9)),      CSC 0140
                 3   (ISRC, NSET(11)), (I NEUT, NSET(12))                       CSC 0150
ISN 0006          FNS(Q000FL) =SIN( XI * ( Q000FL- ETA ))                       CSC 0190
ISN 0007          FNC(Q001FL) =COS( XI * ( Q001FL- ETA ))                       CSC 0200
ISN 0008      100 ISO(1) = LSO                                                  CSC 0210
ISN 0009          ISO(2) = NSO                                                  CSC 0220
ISN 0010          ISO(3) = MSO                                                  CSC 0230
ISN 0011          IF  ( ISRC - 1 )  150,150,450                                 CSC 0240
            C     INTENSITIES COMPUTED FROM XI-S                                CSC 0250
ISN 0012      150 DO  400  N=1,3                                                CSC 0260
ISN 0013          FT(N) = 0.0                                                   CSC 0270
ISN 0014          KOUNT = 3 * NS OPT + N                                        CSC 0280
ISN 0015          MAX = ISO(N)                                                  CSC 0290
ISN 0016          IF  ( XISO(1,N) )  300,200,300                                CSC 0300
            C         XI=0                                                      CSC 0310
            C                R   PHI   Z     X    Y    Z    RHO  PHI  THETA     CSC 0320
ISN 0017      200 GO TO  ( 230, 210, 210,  210, 210, 210,  250, 210, 270 ), KOUNT  CSC 0330
            C       PHI,  Z,    X,  Y,  Z,    PHI                             CSC 0340
ISN 0018      210 DO  220  M=1,MAX                                              CSC 0350
ISN 0019          F(M,N) = CSO(M+1,N) - CSO(M,N)                                CSC 0360
ISN 0020          CSO(M,N) = 0.5 * ( CSO(M+1,N) + CSO(M,N) )                    CSC 0370
```

```
ISN 0021          FT(N) = FT(N) + F(M,N)                                    CSC 0380
ISN 0022      220 CONTINUE                                                  CSC 0390
ISN 0023          GO TO  400                                                CSC 0400
            C       R                                                       CSC 0410
ISN 0024      230 DO  240  M=1,MAX                                          CSC 0420
ISN 0025          F(M,N) = ( CSO(M+1,N) ** 2.0 - CSO(M,N) ** 2.0 ) / 2.0    CSC 0430
ISN 0026          CSO(M,N) = 0.5 * ( CSO(M+1,N) + CSO(M,N) )                CSC 0440
ISN 0027          FT(N) = FT(N) + F(M,N)                                    CSC 0450
ISN 0028      240 CONTINUE                                                  CSC 0460
ISN 0029          GO TO  400                                                CSC 0470
            C       RHO                                                     CSC 0480
ISN 0030      250 DO  260  M=1,MAX                                          CSC 0490
ISN 0031          F(M,N) = ( CSO(M+1,N) ** 3.0 - CSO(M,N) ** 3.0 ) / 3.0    CSC 0500
ISN 0032          CSO(M,N) = 0.5 * ( CSO(M+1,N) + CSO(M,N) )                CSC 0510
ISN 0033          FT(N) = FT(N) + F(M,N)                                    CSC 0520
ISN 0034      260 CONTINUE                                                  CSC 0530
ISN 0035          GO TO  400                                                CSC 0540
            C       THETA                                                   CSC 0550
ISN 0036      270 DO  280  M=1,MAX                                          CSC 0560
ISN 0037          F(M,N) = COS( CSO(M,N) ) - COS( CSO(M+1,N) )              CSC 0570
ISN 0038          CSO(M,N) = 0.5 * ( CSO(M+1,N) + CSO(M,N) )                CSC 0580
ISN 0039          FT(N) = FT(N) + F(M,N)                                    CSC 0590
ISN 0040      280 CONTINUE                                                  CSC 0600
ISN 0041          GO TO  400                                                CSC 0610
            C         XI NOT ZERO                                           CSC 0620
ISN 0042      300 XI  = XISO(1,N)                                           CSC 0630
ISN 0043          ETA = XISO(2,N)                                           CSC 0640
            C                R   PHI   Z     X    Y    Z    RHO  PHI  THETA CSC 0650
ISN 0044          GO TO  ( 330, 310, 310,  310, 310, 310,  350, 310, 370 ), KOUNT CSC 0660
            C       PHI,  Z,    X,  Y,  Z,    PHI                         CSC 0670
ISN 0045      310 DO  320  M=1,MAX                                          CSC 0680
ISN 0046          F(M,N) = ( FNS( CSO(M+1,N) ) - FNS( CSO(M,N) ) )          CSC 0690
                 1 / XI                                                     CSC 0700
ISN 0047          CSO(M,N) = 0.5 * ( CSO(M+1,N) + CSO(M,N) )                CSC 0710
ISN 0048          FT(N) = FT(N) + F(M,N)                                    CSC 0720
ISN 0049      320 CONTINUE                                                  CSC 0730
ISN 0050          GO TO  400                                                CSC 0740
            C       R                                                       CSC 0750
```

```
ISN 0051        330 DO  340  M=1,MAX                                          CSC 0760
ISN 0052             F(M,N)=(FNC(CSO(M+1,N))-FNC(CSO(M,N))+
                   1XI*(CSO(M+1,N)*FNS(CSO(M+1,N))
                   2-CSO(M,N)*FNS(CSO(M,N))))/XI**2
ISN 0053             CSO(M,N) = 0.5 * ( CSO(M+1,N) + CSO(M,N) )                CSC 0790
ISN 0054             FT(N) =FT(N) + F(M,N)                                     CSC 0800
ISN 0055        340 CONTINUE                                                   CSC 0810
ISN 0056             GO TO  400                                                CSC 0820
              C        RHO                                                     CSC 0830
ISN 0057        350 DO  360  M=1,MAX                                           CSC 0840
ISN 0058             F(M,N) =                                                  CSC 0850
                   1    ((( XI *CSO(M+1,N) ) ** 2.0 - 2.0 ) * FNS( CSO(M+1,N) )  CSC 0860
                   2  -(( XI *CSO(M,N) )    ** 2.0 - 2.0 ) * FNS( CSO(M,N) )  CSC 0870
                   3 + 2.0 * XI * ( CSO(M+1,N) * FNC( CSO(M+1,N) )           CSC 0880
                   4- CSO(M,N) * FNC( CSO(M,N) ))) / XI ** 3.0               CSC 0890
ISN 0059             CSO(M,N) = 0.5 * ( CSO(M+1,1) + CSO(M,N) )                CSC 0900
ISN 0060             FT(N) = FT(N) + F(M,N)                                    CSC 0910
ISN 0061        360 CONTINUE                                                   CSC 0920
ISN 0062             GOTO400                                                   CSC 0930
              C        THETA                                                   CSC 0940
ISN 0063        370 IF  ( XI - 1.0 )  380,390,380                              CSC 0950
              C        XI NOT ONE                                              CSC 0960
ISN 0064        380 DO  385  M=1,MAX                                           CSC 0970
ISN 0065             F(M,N) = ( SIN( CSO(M+1,N) ) * FNS( CSO(M+1,N) )          CSC 0980
                   1 - SIN( CSO(M,N) ) * FNS( CSO(M,N) )                     - CSC 0990
                   2 XI * (COS( CSO(M+1,N) ) * FNC( CSO(M+1,N) )           - C CSC 1000
                   3OS( CSO(M,N) ) * FNC( CSO(M,N) ) ))                  / ( X CSC 1010
                   4I ** 2.0 - 1.0 )                                           CSC 1020
ISN 0066             CSO(M,N) = 0.5 * ( CSO(M+1,N) + CSO(M,N) )                CSC 1030
ISN 0067             FT(N) = FT(N) + F(M,N)                                    CSC 1040
ISN 0068        385 CONTINUE                                                   CSC 1050
ISN 0069             GO TO  400                                                CSC 1060
              C        XI = 1                                                  CSC 1070
ISN 0070        390 DO  395  M=1,MAX                                           CSC 1080
ISN 0071             F(M,N) = 0.5 * ( SIN( CSO(M+1,N) ) * FNS( CSO(M+1,N) )    CSC 1090
                   1 - SIN( CSO(M,N) ) * FNS( CSO(M,N) )                     - CSC 1100
                   2 ( CSO(M+1,N) - CSO(M,N) ) * SIN( ETA ) )                CSC 1110
ISN 0072             CSO(M,N) = 0.5 * ( CSO(M+1,N) + CSO(M,N) )                CSC 1120
```

```
ISN 0073          FT(N) = FT(N) + F(M,N)                                        CSC 1130
ISN 0074      395 CONTINUE                                                      CSC 1140
ISN 0075      400 CONTINUE                                                      CSC 1150
ISN 0076          GO TO  800                                                    CSC 1160
            C     INTENSITIES COMPUTED FROM INPUT F-S...                        CSC 1170
ISN 0077      450 DO  600  N=1,3                                                CSC 1180
ISN 0078          FT(N) = 0.0                                                   CSC 1190
ISN 0079          KOUNT = 3 * NS OPT + N                                        CSC 1200
ISN 0080          MAX = ISO(N)                                                  CSC 1210
            C                R   PHI   Z     X    Y    Z    RHO  PHI  THETA     CSC 1220
ISN 0081          GO TO  ( 530, 510, 510, 510, 510, 510, 550, 510, 570 ), KOUNT CSC 1230
            C       PHI    X  Y  Z    PHI                                      CSC 1240
ISN 0082      510 DO  520  M=1,MAX                                              CSC 1250
ISN 0083          F(M,N) =                                                      CSC 1260
                 1   ( F(M+1,N) + F(M,N) ) * ( CSO(M+1,N) - CSO(M,N) )          CSC 1270
ISN 0084          CSO(M,N) = 0.5 * ( CSO(M+1,N) + CSO(M,N) )                    CSC 1280
ISN 0085          FT(N) = FT(N) + F(M,N)                                        CSC 1290
ISN 0086      520 CONTINUE                                                      CSC 1300
ISN 0087          GO TO  600                                                    CSC 1310
            C       R                                                           CSC 1320
ISN 0088      530 DO  540  M=1,MAX                                              CSC 1330
ISN 0089          F(M,N) =                                                      CSC 1340
                 1   2.0 * ( F(M+1,N) * CSO(M+1,N) ** 2 - F(M,N) * CSO(M,N) ** 2 ) CSC 1350
                 2   - ( F(M+1,N) * CSO(M,N) - F(M,N) * CSO(M+1,N) )            CSC 1360
                 3   * ( CSO(M+1,N) + CSO(M,N) )                                CSC 1370
ISN 0090          CSO(M,N) = 0.5 * ( CSO(M+1,N) + CSO(M,N) )                    CSC 1380
ISN 0091          FT(N) = FT(N) + F(M,N)                                        CSC 1390
ISN 0092      540 CONTINUE                                                      CSC 1400
ISN 0093          GO TO  600                                                    CSC 1410
            C       RHO                                                         CSC 1420
ISN 0094      550 DO  560  M=1,MAX                                              CSC 1430
ISN 0095          F(M,N) =                                                      CSC 1440
                 1   3.0 * ( F(M+1,N) * CSO(M+1,N) ** 3 - F(M,N) * CSO(M,N) ** 3 ) CSC 1450
                 2   - ( F(M+1,N) * CSO(M,N) - F(M,N) * CSO(M+1,N) )            CSC 1460
                 3   * ( CSO(M+1,N) ** 2 + CSO(M+1,N) * CSO(M,N) + CSO(M,N) ** 2 ) CSC 1470
ISN 0096          CSO(M,N) = 0.5 * ( CSO(M+1,N) + CSO(M,N) )                    CSC 1480
```

```
ISN 0097          FT(N) = FT(N) + F(M,N)                                    CSC 1490
ISN 0098      560 CONTINUE                                                  CSC 1500
ISN 0099          GO TO  600                                                CSC 1510
            C       THETA                                                   CSC 1520
ISN 0100      570 DO  580  M=1,MAX                                          CSC 1530
ISN 0101          F(M,N) =                                                  CSC 1540
                 1   ( ( SIN( CSO(M+1,N) ) - SIN( CSO(M,N) )                CSC 1550
                 2 - ( CSO(M+1,N) * COS( CSO(M+1,N) )                       CSC 1560
                 3- CSO(M,N) * COS( CSO(M,N) ) ) )                        * CSC 1570
                 4 ( F(M+1,N) - F(M,N) )                                  - CSC 1580
                 5 ( COS( CSO(M+1,N) ) - COS( CSO(M,N) ) )              * ( CSC 1590
                 6 CSO(M+1,N) * F(M,N) - CSO(M,N) * F(M+1,N) ) )        / ( CSC 1600
                 7 CSO(M+1,N) - CSO(M,N) )                                  CSC 1610
ISN 0102          CSO(M,N) = 0.5 * ( CSO(M+1,N) + CSO(M,N) )                CSC 1620
ISN 0103          FT(N) = FT(N) + F(M,N)                                    CSC 1630
ISN 0104      580 CONTINUE                                                  CSC 1640
ISN 0105      600 CONTINUE                                                  CSC 1650
            C     SOURCE NORMALIZATION                                      CSC 1660
ISN 0106      800 ASO = ABS( ASO / ( FT(1) * FT(2) * FT(3) ) )              CSC 1670
ISN 0107          MAX = ISO(3)                                              CSC 1680
ISN 0108          DO  820  M=1,MAX                                          CSC 1690
ISN 0109          F(M,3) = F(M,3) * ASO                                     CSC 1700
ISN 0110      820 CONTINUE                                                  CSC 1710
ISN 0111          DO  840  N=1,3                                            CSC 1720
ISN 0112          M = ISO(N) + 1                                            CSC 1730
ISN 0113          CSO(M,N) = 0.0                                            CSC 1740
ISN 0114          F(M,N) = 0.0                                              CSC 1750
ISN 0115      840 CONTINUE                                                  CSC 1760
            C     SOURCE COORDINATES AND INTENSITIES PRINT                  CSC 1770
ISN 0116      1   FORMAT  ( 1H0, 12X, 16H    R COORDINATE )                CSC 1780
ISN 0117      2   FORMAT  ( 1H0, 12X, 16H  PHI COORDINATE )                CSC 1790
ISN 0118      3   FORMAT  ( 1H0, 12X, 16H    Z COORDINATE )                CSC 1800
ISN 0119      4   FORMAT  ( 1H0, 12X, 16H    X COORDINATE )                CSC 1810
ISN 0120      5   FORMAT  ( 1H0, 12X, 16H    Y COORDINATE )                CSC 1820
ISN 0121      7   FORMAT  ( 1H0, 12X, 16H  RHO COORDINATE )                CSC 1830
ISN 0122      9   FORMAT  ( 1H0, 12X, 16HTHETA COORDINATE )                CSC 1840
ISN 0123      11  FORMAT  ( 1H1, 34X, 15HCOORDINATE TYPE, I2, 10X,          CSC 1850
                 1  23HSOURCE INTENSITY OPTION, I2 )                        CSC 1860
```

```
ISN 0124      12    FORMAT  ( 1H , 4X, 4( 4X, 10HCOORDINATE, 4X, 9HINTENSITY ) // )    CSC 1870
ISN 0125      13    FORMAT  ( 1H , I5, 1P8E14.4 )                                      CSC 1880
ISN 0126      900   WRITE (6      ,11)NS OPT, ISRC                                     CSC 1890
ISN 0127            DO  940  N=1,3                                                     CSC 1900
ISN 0128            KOUNT = 3 * NS OPT + N                                             CSC 1910
ISN 0129            GO TO  ( 901, 902, 903,  904, 905, 903,  907, 902, 909 ), KOUNT    CSC 1920
ISN 0130       901  WRITE (6      ,1)                                                  CSC 1930
ISN 0131            GO TO  910                                                         CSC 1940
ISN 0132       902  WRITE (6      ,2)                                                  CSC 1950
ISN 0133            GO TO  910                                                         CSC 1960
ISN 0134       903  WRITE (6      ,3)                                                  CSC 1970
ISN 0135            GO TO  910                                                         CSC 1980
ISN 0136       904  WRITE (6      ,4)                                                  CSC 1990
ISN 0137            GO TO  910                                                         CSC 2000
ISN 0138       905  WRITE (6      ,5)                                                  CSC 2010
ISN 0139            GO TO  910                                                         CSC 2020
ISN 0140       907  WRITE (6      ,7)                                                  CSC 2030
ISN 0141            GO TO  910                                                         CSC 2040
ISN 0142       909  WRITE (6      ,9)                                                  CSC 2050
ISN 0143       910  WRITE (6      ,12)                                                 CSC 2060
ISN 0144            MAX = ISO(N)                                                       CSC 2070
ISN 0145            DO  920  M=1,MAX,4                                                 CSC 2080
ISN 0146            MAX P = M + 3                                                      CSC 2090
ISN 0147            WRITE (6      ,13)M, ( CSO(I,N), F(I,N), I=M,MAX P )               CSC 2100
ISN 0148       920  CONTINUE                                                           CSC 2110
ISN 0149       940  CONTINUE                                                           CSC 2120
ISN 0150      1000  RETURN                                                             CSC 2130
ISN 0151            END                                                                CSC 2140
```

```
ISN 0002          SUBROUTINE XSECQD
ISN 0003          COMMON /STDATA/
                 1 NAME  (100)  , ENRG  (20)    , XSECO (20,100),XSECEA(20)    ,
                 2 C   (4,6,9)  , EMINBB(8)     , NAMB(12)      , XSECNT(100)  ,DCONST
ISN 0004          COMMON /QADATA/
                 1 NSET  (30)   , RSO  (101)    , PHISO (101)   , ZSO  (101)   ,
                 2 NBNDZN(50)   , NCMPZN(50)    , LBD   (6,50)  , NTRYZN(6,50) ,
                 3 NEQBD (50)   , ABD   (50)    , BBD   (50)    , CBD   (50)   ,
                 4 XOBD  (50)   , YOBD  (50)    , ZOBD  (50)    , DBD   (50)   ,
                 5 HYDRAT(30)   , XSECN (30)    , XSECG (20,30), BILDO (30)    ,
                 6 BILD1 (30)   , BILD2 (30)    , BILD3 (30)    , GAMEN (30)   ,
                 7 CONV  (30)   , COMP  (20,40), EBAR  (30)    , MATZ  (20)   ,
                 8 FL    (101)  , FN    (101)   , FM    (101)   , XISO  (2,3)  ,
                 9 ASO   , IU    , RRC    , ZRC   , PHIRC ,ALF1  , ALF2  , ALF3  ,
                 X ALF4  , EPSLN , FUDGE , NBLD ,ID(18)
ISN 0005          DIMENSION BILD(30,4), XSEC(19,30),SLOPE(19,30)
ISN 0006          EQUIVALENCE (NSET(4),MAT)  , (NSET(7),NRGY)
            C     CALCULATE QAD BUILDUP COEFFICIENTS.
            C     NBLD=1, 2, 3, 4, = H2O, AL, FE, OR PB DOSE BUILDUP
            C     NBLD=5, 6, 7, 8, = H2O, AL, FE, OR PB ENERGY ABSORPTION BUILDUP
ISN 0007          DO 12 I=1,NRGY
ISN 0008          E= EBAR(I)
ISN 0009          IF(NBLD.GE.8)  GO TO 5
ISN 0011          LIM=5
ISN 0012          IF(NBLD.EQ.4) LIM=6
ISN 0014          IF(E.LT.EMINBB(NBLD)) E=EMINBB(NBLD)
ISN 0016          IF(NBLD.NE.4) E=1.0/E
ISN 0018          NB=NBLD
ISN 0019          GO TO 9
ISN 0020        5 IF(E-4.0) 6,6,7
ISN 0021        6 LIM=4
ISN 0022          IF(E.LT. 0.5) E=0.5
ISN 0024          E=1.0/E
ISN 0025          NB=8
ISN 0026          GO TO 9
ISN 0027        7 LIM=3
ISN 0028          NB=9
ISN 0029        9 DO 10  II=1,4
```

```
ISN 0030          BILD(I,II)=0.
ISN 0031          DO 10  J=1,LIM
ISN 0032       10 BILD(I,II) = BILD(I,II)+ C(II,J,NB)    *E**(J-1)
ISN 0033          BILD0(I)= BILD(I,1)
ISN 0034          BILD1(I)= BILD(I,2)
ISN 0035          BILD2(I)= BILD(I,3)
ISN 0036       12 BILD3(I)= BILD(I,4)
            C     SELECT CROSS-SECTIONS FROM LARGE TABLE
ISN 0037          DO 15  M=1,MAT
ISN 0038          L= MATZ(M)
ISN 0039          DO 15 NE=1,19
ISN 0040          XSEC(NE,M)= XSECO(NE,L)
ISN 0041       15 SLOPE(NE,M)= (XSECO(NE+1,L)-XSECO(NE,L))/(ENRG(NE+1)-ENRG(NE))
            C     CALCULATE CROSS-SECTIONS AT ENERGY EBAR(I)
ISN 0042          DO 25 I=1,NRGY
ISN 0043          DO 20 NE=1,19
ISN 0044          IF(EBAR(I)-ENRG(NE+1)) 22,22,20
ISN 0045       20 CONTINUE
ISN 0046          NE=19
ISN 0047       22 DO 25 M=1,MAT
ISN 0048          XSECG(M,I) = XSEC(NE,M)+ SLOPE(NE,M)*(EBAR(I)-ENRG(NE))
ISN 0049       25 CONTINUE
ISN 0050          RETURN
ISN 0051          END
```

```
ISN 0002          SUBROUTINE  PRINT                                          PRIN0020
            CPRINT   SUBROUTINE USED WITH QAD-PR                             PRIN0010
                 1   ( ID, NBMID, UNIT G, UNIT N, UNIT GI, UNIT NI, UNIT ND,  PRIN0030
                 2   WIDTH T, WIDTH G, WIDTH N, NG INT, NN INT,              PRIN0040
                 3   NO RC, MRC, C DET, EG, EN, EG AV, EN AV,                PRIN0050
                 4   TOTAL G, TOTAL N, GRP G,  GRP N,                        PRIN0060
                 5   TOTL GI, TOTL NI, GRP GI, GRP NI,                       PRIN0070
                 6   NRGY, I NEUT,   N ERR, NS IND,   NEUT,                  PRIN0080
                 7   X NL MAX, X NL MIN, IS MAX, IS MIN )                    PRIN0090
ISN 0003          DIMENSION  IS MAX(3), IS MIN(3)                            PRIN0110
ISN 0004          DIMENSION  ID(18), NBMID(18,3),  UNIT G(18), UNIT N(12),UNITND(3),
                 1   UNIT GI(27), UNIT NI(27), WIDTH T(2,2),                 PRIN0130
                 2   WIDTH G(30,3), WIDTH N(10,2),C DET(3), EG(30), EN(10),
                 3   TOTAL G(6), TOTAL N(5,5), GRP G(30,6), GRP N(15,5,5),   PRIN0150
                 4   TOTL GI(6), TOTL NI(3,5), GRP GI(30,6), GRP NI(15,3,5),  PRIN0160
                 5   EG AV(2), EN AV(5), NS IND(5,3)                         PRIN0170
ISN 0005          COMMON/QADATA/  NSET(30)
ISN 0006         2 FORMAT  ( 1H-, 3HGRP,                                     PRIN0490
                 1   5X, 4HMEAN, 7X, 6HENERGY, 8X, 11HDIRECT BEAM,           PRIN0500
                 2   2X, 12HMEAN BUILDUP, 10X, 9HDOSE RATE, 13X,             PRIN0510
                 3   21HHEATING RATES IN IRON / 3H NO, 5X,                   PRIN0520
                 4   6HENERGY, 3X, 12HGROUP LIMITS, 8X, 4HFLUX,              PRIN0530
                 5   8X, 7HFACTORS, 6X, 25HDIRECT BEAM  WITH BUILDUP,        PRIN0540
                 6   3X, 25HDIRECT BEAM  WITH BUILDUP  / 9X, 3HMEV,          PRIN0550
                 7   9X, 3HMEV,10X, 3A4, 22X, 3A4, 16X, 3A4 / 34X, 3A4,      PRIN0560
                 8   22X, 3A4, 16X, 3A4 / 6H TOTAL, 1X, F7.4, 3X, 2A4, 6X,   PRIN0570
                 9   3( 1P2E13.4, 2X ) / 6H W/BU , 1X, OPF7.4 // )           PRIN0580
ISN 0007         3 FORMAT  ( 1H , I2, F11.4, 3X, 3A4, 2X, 3(1P2E13.4, 2X ) ) PRIN0590
ISN 0008         4 FORMAT  (                                                 PRIN0600
                 1   4H-GRP, 5X, 4HMEAN, 6X, 6HENERGY,11X, 6HNUMBER,         PRIN0610
                 2   7X, 6HNUMBER, 8X, 6HENERGY, 6X, 9HDOSE RATE,            PRIN0620
                 3   3X, 12HHEATING RATE / 3H NO, 5X, 6HENERGY, 3X,          PRIN0630
                 4   12HGROUP LIMITS, 6X, 8HSPECTRUM, 7X, 4HFLUX, 9X,        PRIN0640
                 5   4HFLUX, 23X, 7HIN IRON / 9X, 3HMEV, 9X, 3HMEV, 11X,     PRIN0650
                 6   8HNEUT PER, 5X, 8HNEUT PER, 5X, 7HMEV PER, 6X, 3A4,     PRIN0660
                 7   1X, 3A4 / 32X, 13HSQ-CM-SEC-MEV, 2( 2X, 9HSQ-CM-SEC, 2X ),  PRIN0670
                 8   3X, 2( 3A4, 1X ) )                                      PRIN0680
```

```
ISN 0009        41 FORMAT  ( 1H-, 23X, 18A4 //                                    PRIN0690
                  1                    6H TOTAL, F8.4, 2X, 2A4, 20X,              PRIN0700
                  2   2( 1P2E13.4, 2X ) // )                                      PRIN0710
ISN 0010         5 FORMAT  (1H ,I2, F11.4, 3X, 2A4, 6X, 1P3E13.4, 2X,             PRIN0720
                  1   1P2E13.4 )                                                  PRIN0730
ISN 0011         6 FORMAT  ( 1H-, 3HGRP,                                          PRIN0740
                  1          4X, 4HMEAN, 8X, 6HENERGY, 17X, 3( 3A4, 16X ) /       PRIN0750
                  2   3H NO, 4X, 6HENERGY, 4X, 12HGROUP LIMITS, 14X, 3( 3A4, 16X ) /  PRIN0760
                  3   8X, 3HMEV,10X, 3HMEV, 19X, 3( 3A4, 16X ) /                  PRIN0770
                  4   36X, 3( 28HDIRECT BEAM  WITH BUILDUP   ) // 6H TOTAL, 11X,  PRIN0780
                  5   2A4, 9X, 3( 1P2E13.4, 2X ) // )                            PRIN0790
ISN 0012         7 FORMAT  ( 1H , I2, F10.4,  4X, 3A4, 5X, 3( 1P2E13.4, 2X ) )    PRIN0800

                                                                                  PRIN0810
ISN 0013         8 FORMAT  (                                                      PRIN0820
                  1                4H GRP, 4X, 4HMEAN, 8X, 6HENERGY,10X,          PRIN0830
                  2   3( 3A4, 4X ) / 3H NO, 4X, 6HENERGY, 4X, 12HGROUP LIMITS,    PRIN0840
                  3   7X, 3( 3A4, 4X ) / 9X, 3HMEV, 9X, 3HMEV, 12X, 3( 3A4, 4X )  PRIN0850
                  4  // )                                                         PRIN0860
ISN 0014        81 FORMAT  ( 1H-, 23X, 18A4                                       PRIN0870
                  1  // 6H TOTAL, 11X, 2A4, 6X, 1P3E16.4 // )                     PRIN0880
ISN 0015         9 FORMAT  ( 1H , I2, F10.4, 4X, 2A4, 6X, 1P3E16.4 )              PRIN0890
ISN 0016       911 FORMAT  ( 1H+, 54X, 15H(UNDEFINED FOR  , I5, 15H SOURCE POINTS) )  PRIN0900
ISN 0017       912 FORMAT  ( 1H+, 54X, 30H-UNDEFINED FOR SOURCE POINTS  ,         PRIN0910
                  1   3( 3I3, 3X ) / 85X, ( 3I3, 3X ) )                           PRIN0920
ISN 0018       913 FORMAT  ( 1H , 28HFAST NEUTRON REMOVAL LENGTHS , 5X,           PRIN0930
                  1   3HMAX, 1PE12.4, 14H( SOURCE POINT , 3I3, 1H), 5X,           PRIN0940
                  2   3HMIN, 1PE12.4, 14H( SOURCE POINT , 3I3, 1H) )               PRIN0950
ISN 0019        10 FORMAT  ( 1H0, 29HTHE ALBERT-WELTON DOSE RATE  , 1PE10.4, 1X, 3A4)  PRIN0960
ISN 0020       100 CALL  TITLE   ( 1, MRC, NORC, CDET(1), ID(1))                  PRIN0970
ISN 0021           WRITE (6     ,2)UNIT G, EG AV(1), ( WIDTH T(1,J), J=1,2),      ( T PRIN0980
                  1OTAL G(I), I=1,6 ), EG AV(2)                                   PRIN0990
ISN 0022           DO  120  I=1,NRGY                                              PRIN1000
ISN 0023           WRITE (6     ,3)I, EG(I), ( WIDTH G(I,J), J=1,3 ),             ( G PRIN1010
                  1RP G(I,J), J=1,6 )                                             PRIN1020
ISN 0024       120 CONTINUE                                                       PRIN1030
ISN 0025           IF  ( NG INT )  300,300,200                                    PRIN1040
ISN 0026       200 NG I = 2 * NG INT                                              PRIN1050
ISN 0027           WRITE (6     ,6)UNIT GI, ( WIDTH T(1,J), J=1,2 ),              ( T PRIN1060
                  1OTL GI(I), I=1,NG I )                                          PRIN1070
```

```
ISN 0028          DO  220  I=1,NRGY                                          PRIN1070
ISN 0029          WRITE (6      ,7)I, EG(I), ( WIDTH G(I,J), J=1,3 ),   ( G PRIN1080
                 1RP GI(I,J), J=1,NG I )                                     PRIN1090
ISN 0030      220 CONTINUE                                                   PRIN1100
ISN 0031      300 IF  ( N SET(19) )  301,301,1000                            PRIN1110
ISN 0032      301 CALL  TITLE   ( 2, MRC, NORC, CDET(1), ID(1))              PRIN1120
ISN 0033          IF  ( TOTAL N(5,1) )  400,400,305                          PRIN1130
ISN 0034      305 WRITE (6      ,10)TOTAL N(5,1), UNIT ND                    PRIN1140
ISN 0035          IF  ( NERR )  340,340,310                                  PRIN1150
ISN 0036      310 IF  ( NERR - 5 )  320,320,330                              PRIN1160
ISN 0037      320 WRITE (6      ,912)( ( NS IND(I,J), J=1,3 ),I=1,NERR )     PRIN1170
ISN 0038          GO TO  340                                                 PRIN1180
ISN 0039      330 WRITE (6      ,911)NERR                                    PRIN1190
ISN 0040      340 WRITE (6      ,913)X NL MAX, ( IS MAX(I), I=1,3 ),         PRIN1200
                 1                  X NL MIN, ( IS MIN(I), I=1,3 )          PRIN1210
ISN 0041      400 WRITE (6      ,4)UNIT N                                    PRIN1220
ISN 0042          DO  440  N=1,NEUT                                          PRIN1230
ISN 0043          IF  ( N - 4 )  420,410,420                                 PRIN1240
ISN 0044      410 CALL  TITLE   ( 2, MRC, NORC, CDET(1), ID(1))              PRIN1250
ISN 0045          WRITE (6      ,4)UNIT N                                    PRIN1260
ISN 0046      420 WRITE (6      ,41)( NBMID(K,N), K=1,18 ),              EN  PRIN1270
                 1AV(N), ( WIDTH T(2,J), J=1,2 ), ( TOTAL N(I,N), I=1,4 )    PRIN1280
ISN 0047          DO  430  I=1,I NEUT                                        PRIN1290
ISN 0048          WRITE (6      ,5)I, EN(I), ( WIDTH N(I,J), J=1,2 ) ,   ( G PRIN1300
                 1RP N(I,J,N), J=1,5 )                                       PRIN1310
ISN 0049      430 CONTINUE                                                   PRIN1320
ISN 0050      440 CONTINUE                                                   PRIN1330
ISN 0051          IF  ( NN INT )  1000,1000,500                              PRIN1340
ISN 0052      500 CALL  TITLE   ( 2, MRC, NORC, CDET(1), ID(1))              PRIN1350
ISN 0053          WRITE (6      ,8)UNIT NI                                   PRIN1360
ISN 0054          DO  540  N=1,NEUT                                          PRIN1370
ISN 0055          IF  ( N - 4 )  520,510,520                                 PRIN1380
ISN 0056      510 CALL  TITLE   ( 2, MRC, NORC, CDET(1), ID(1))              PRIN1390
ISN 0057          WRITE (6      ,8)UNIT NI                                   PRIN1400
ISN 0058      520 WRITE (6      ,81)( NBMID(K,N), K=1,18),               ( WID PRIN1410
                 1TH T(2,J), J=1,2), ( TOTL NI(I,N), I=1,NN INT )            PRIN1420
ISN 0059          DO  530  I=1,I NEUT                                        PRIN1430
```

```
ISN 0060          WRITE (6      ,9)I, EN(I), ( WIDTH N(I,J), J=1,2 ),              ( G PRIN1440
                 1RP NI(I,J,N), J=1,NN INT )                                          PRIN1450
ISN 0061       530 CONTINUE                                                           PRIN1460
ISN 0062       540 CONTINUE                                                           PRIN1470
ISN 0063      1000 RETURN                                                             PRIN1480
ISN 0064          END                                                                 PRIN1490

ISN 0002          SUBROUTINE  TITLE   ( N, MRC, NO RC, C DET, ID )                    TITL0020
            CTITL       SUBROUTINE USED WITH QAD-P5    PRINTS PAGE TITLES             TITL0010
ISN 0003          DIMENSION   C DET(3), ID(18)                                        TITL0030
ISN 0004        1 FORMAT  ( 1H1, 23X, 18A4 //6X, 15HRECEIVER NUMBER,                  TITL0100
                 1   I3, 4X, 13HCOORDINATES - )                                       TITL0110
ISN 0005       11 FORMAT  ( 1H+, 46X, 3HR   , 1PE12.4, 5X, 3HPHI, 1PE12.4, 5X, 3HZ  , TITL0120
                 1   1PE12.4 )                                                        TITL0130
ISN 0006       12 FORMAT  ( 1H+, 46X, 3HX   , 1PE12.4, 5X, 3HY  , 1PE12.4, 5X, 3HZ  , TITL0140
                 1   1PE12.4 )                                                        TITL0150
ISN 0007       13 FORMAT  ( 1H+, 46X, 3HRHO, 1PE12.4, 5X, 3HPHI, 1PE12.4, 5X, 5HTHET TITL0160
                 1A, 1PE12.4 )                                                        TITL0170
ISN 0008        2 FORMAT( 1H0, 20X, 38HGEOMETRY PRINT FOR PSEUDO SOURCE POINT        TITL0180
                 1     25H AT THE COORDINATE ORIGIN  )                                TITL0190
ISN 0009      100  WRITE (6      ,1)ID, NO RC                                         TITL0200
ISN 0010           GO TO  ( 101, 102, 103 ), MRC                                     TITL0210
ISN 0011      101  WRITE (6      ,11)C DET                                            TITL0220
ISN 0012           GO TO  200                                                        TITL0230
ISN 0013      102  WRITE (6      ,12)C DET                                            TITL0240
ISN 0014           GO TO  200                                                        TITL0250
ISN 0015      103  WRITE (6      ,13)C DET                                            TITL0260
ISN 0016      200  GO TO  ( 1000, 1000, 201 ), N                                     TITL0270
ISN 0017      201  WRITE (6      ,2)                                                  TITL0280
ISN 0018      1000 RETURN                                                             TITL0290
ISN 0019           END                                                                TITL0300
```

```
ISN 0002          SUBROUTINE SLITET(N,K)
ISN 0003          COMMON/SLITEX/LITES(4)
ISN 0004          IF(LITES(N)) 1,2,1
ISN 0005        2 K = 2
ISN 0006          RETURN
ISN 0007        1 LITES(N) = 0
ISN 0008          K=1
ISN 0009          RETURN
ISN 0010          END
```

```
ISN 0002          SUBROUTINE SLITE(N)
ISN 0003          COMMON/SLITEX/LITES(4)
ISN 0004          IF(N) 1,2,1
ISN 0005        2 DO 3 I=1,4
ISN 0006        3 LITES(I)=0
ISN 0007          RETURN
ISN 0008        1 LITES(N)=1
ISN 0009          RETURN
ISN 0010          END
```

```
ISN 0002          SUBROUTINE WEIGHT
ISN 0003          COMMON /QADATA/
                 1 NSET  (30)    , RSO  (101)    , PHISO (101)   , ZSO  (101)    ,
                 2 NBNDZN(50)    , NCMPZN(50)    , LBD   (6,50)  , NTRYZN(6,50)  ,
                 3 NEQBD (50)    , ABD   (50)    , BBD   (50)    , CBD   (50)    ,
                 4 XOBD  (50)    , YOBD  (50)    , ZOBD  (50)    , DBD   (50)    ,
                 5 HYDRAT(30)    , XSECN (30)    , XSECG (20,30), BILDO (30)    ,
                 6 BILD1 (30)    , BILD2 (30)    , BILD3 (30)    , GAMEN (30)    ,
                 7 CONV  (30)    , COMP  (20,40), EBAR  (30)    , MATZ  (20)
ISN 0004          EQUIVALENCE(LSO,NSET(1)),(MSO,NSET(2)),(NSO,NSET(3)),
                 1(MAT,NSET(4)),(NCOMP,NSET(5)),(NREG,NSET(6)),(NRGY,NSET(7)),
                 2(NBOUND,NSET(8)),(ISRC,NSET(11)),(INEUT,NSET(12))
ISN 0005          DIMENSION RSQ(6), X(6), Y(6), Z(6), NQB(6), CFLAG(6), QFLAG(6),
                 1 XFLAG(6), YFLAG(6), ZFLAG(6), V(16), W(16)
ISN 0006          DATA V              /0.529953E-2,0.277125E-1,0.671844E-1,0.122298,
                 X0.191062,.270992,0.359198,0.452494,0.547506,0.640802,0.729008,
                 Y0.808938,.877702,0.932816,0.972288,0.9947/
ISN 0007          DATA W              /0.0135762,0.0311268,0.0475793,0.0623145,
                 X0.0747980,0.0845783,0.0913017,2*0.0947253,0.0913017,0.0845783,
                 Y0.0747980,0.0623145,0.0475793,0.0311268,0.0135762/
ISN 0008          DATA PI/3.1415927/
ISN 0009      500 FORMAT(28H1  J          VOL       WEIGHT)
ISN 0010      501 FORMAT(I4,1P2E12.4)
ISN 0011      502 FORMAT(4HOSUM1P2E12.4)
ISN 0012          WRITE(6,500)
ISN 0013          VTOTAL=0.0
ISN 0014          WTOTAL=0.0
ISN 0015          DO 99 J=1,NREG
ISN 0016          IF(NBNDZN(J)) 99,99,10
ISN 0017       10 IU= NBNDZN(J)
ISN 0018          VOL=0.0
ISN 0019          NX=0
ISN 0020          NY=0
ISN 0021          NZ=0
ISN 0022          NC=0
ISN 0023          NQ=0
ISN 0024          DO 20 I=1,IU
ISN 0025          KK=LBD(I,J)
```

```
ISN 0026          K=IABS(KK)
ISN 0027          FLAG=KK/K
ISN 0028          NEQ=NEQBD(K)
ISN 0029          GO TO(99,12,13,14,15,16),NEQ
ISN 0030       12 NQ=NQ+1
ISN 0031          NQB(NQ)=K
ISN 0032          QFLAG(NQ)=FLAG
ISN 0033          GO TO 20
ISN 0034       13 NC=NC+1
ISN 0035          RSQ(NC)=DBD(K)
ISN 0036          CFLAG(NC)=FLAG
ISN 0037          GO TO 20
ISN 0038       14 NX=NX+1
ISN 0039          X(NX)=DBD(K)
ISN 0040          XFLAG(NX)=FLAG
ISN 0041          GO TO 20
ISN 0042       15 NY=NY+1
ISN 0043          Y(NY)=DBD(K)
ISN 0044          YFLAG(NY)=FLAG
ISN 0045          GO TO 20
ISN 0046       16 NZ=NZ+1
ISN 0047          Z(NZ)=DBD(K)
ISN 0048          ZFLAG(NZ)=FLAG
ISN 0049       20 CONTINUE
             C    CALCULATE VOLUMES
ISN 0050          IF(NZ-2) 99,26,22
ISN 0051       22 ZMAX=+1.0E+8
ISN 0052          ZMIN=-ZMAX
ISN 0053          DO 25 I=1,NZ
ISN 0054          IF(ZFLAG(I))23,99,24
ISN 0055       23 ZMIN=AMAX1(ZMIN,Z(I))
ISN 0056          GO TO 25
ISN 0057       24 ZMAX=AMIN1(ZMAX,Z(I))
ISN 0058       25 CONTINUE
ISN 0059          DZ=ZMAX-ZMIN
ISN 0060          GO TO 261
```

```
ISN 0061          26 DZ = ZFLAG(1)*Z(1) + ZFLAG(2)*Z(2)
ISN 0062         261 IF( (NX.NE.2) .OR.  (NY.NE.2) )  GO TO 27
ISN 0064             DX = XFLAG(1)*X(1) + XFLAG(2)*X(2)
ISN 0065             DY = YFLAG(1)*Y(1) + YFLAG(2)*Y(2)
                C    RECTANGULAR PARALLELPIPED
ISN 0066             VOL=DX*DY*DZ
ISN 0067          27 IF(NC) 99,32,28
ISN 0068          28 DO 30 I=1,NC
                C    CIRCULAR CYLINDER
ISN 0069             VV=CFLAG(I)*PI*RSQ(I)*DZ
ISN 0070          30 VOL=VOL+VV
ISN 0071          32 IF(NQ)99,75,35
ISN 0072          35 NQQ=NQ
ISN 0073             DO 50 L=1,NQQ
ISN 0074             NQ=NQB(L)
ISN 0075             VV=0.0
ISN 0076             DO 45 I=1,16
                C    CALCULATE VOLUME OF FULLY ROTATED QUADRATIC SURFACE (TYPE 2),
                C    BOUNDED BY Z(1) AND Z(2), BY 16 POINT GAUSS QUADRATURE.
ISN 0077             ZZ=Z(1)+V(I)*(Z(2)-Z(1))
ISN 0078             RR=(DBD(NQ)-CBD(NQ)*(ZZ-ZOBD(NQ))**2)/ABD(NQ)
                C    CROSS-SECTION IS ASSUMED CIRCULAR IN Z PLANE
ISN 0079          45 VV =VV +W(I)*PI*RR
ISN 0080          50 VOL=VOL+ QFLAG(L)*VV*DZ
ISN 0081          75 WT=0.0
                C    CALCULATE WEIGHT
ISN 0082             K=NCMPZN(J)
ISN 0083             DO 80 I=1,MAT
ISN 0084          80 WT=WT+VOL*COMP(I,K)
ISN 0085             WRITE(6,501) J,VOL,WT
ISN 0086             VTOTAL=VTOTAL+VOL
ISN 0087             WTOTAL=WTOTAL+WT
ISN 0088          99 CONTINUE
ISN 0089             WRITE(6,502) VTOTAL,WTOTAL
ISN 0090             RETURN
ISN 0091             END
```

```
COMPILER OPTIONS - NAME=  MAIN,OPT=02,LINECNT=56,SOURCE,BCD,NOLIST,DECK,LOAD,MAP,NOEDIT,NOID

ISN 0002            BLOCK DATA
              C**************
              C     MOMENT BLOCK DATA
              C**************
ISN 0003            COMMON/QADNM/ NBMID(18,3) , NASET(3) , RMXSEC(3) , BREAK(3,2) ,
                   1 XNMMC(5,30,3) , CONVN(10) , HISTN(10) , EN(10) , FEABSN(10) ,
                   2 WIDTHN(10,2) , WTN(10,3) , UNITN(12) , UNITNI(27) , UNITND(3) ,
                   3 WIDTHT(2,2)
ISN 0004            DIMENSION WIX(2)
ISN 0005            DIMENSION  H201(5),H202(5),H203(5),H204(5),H205(5),H206(5),H207(5)
                   1,H208(5),H209(5),H2010(5),H2011(5),H2012(5),H2013(5),H2014(5),
                   2H2015(5),H2016(5),H2017(5),H2018(5),H2019(5),H2020(5),H2021(5),
                   3H2022(5),H2023(5),H2024(5),H2025(5),H2026(5),H2027(5),H2028(5),
                   4H2029(5),H2030(5)
ISN 0006            DIMENSION BE1(5),BE2(5),BE3(5),BE4(5),BE5(5),BE6(5),BE7(5),BE8(5),
                   1BE9(5),BE10(5),BE11(5),BE12(5),BE13(5),BE14(5),BE15(5),BE16(5),
                   2BE17(5),BE18(5),BE19(5),BE20(5)
ISN 0007            DIMENSION C1(5),C2(5),C3(5),C4(5),C5(5),C6(5),C7(5),C8(5),C9(5),
                   1C10(5),C11(5),C12(5),C13(5),C14(5),C15(5),C16(5),C17(5),C18(5),
                   2C19(5),C20(5)
ISN 0008            EQUIVALENCE  (XNMMC(1,1,1),H201) , (XNMMC(1,2,1),H202) ,
                   1(XNMMC(1,3,1),H203) , (XNMMC(1,4,1),H204) , (XNMMC(1,5,1),H205) ,
                   2(XNMMC(1,6,1),H206) , (XNMMC(1,7,1),H207) , (XNMMC(1,8,1),H208) ,
                   3(XNMMC(1,9,1),H209) , (XNMMC(1,10,1),H2010) , (XNMMC(1,11,1),H2011
                   4) , (XNMMC(1,12,1),H2012) , (XNMMC(1,13,1),H2013) , (XNMMC(1,14,1)
                   5,H2014) , (XNMMC(1,15,1),H2015) , (XNMMC(1,16,1),H2016) ,
                   6 (XNMMC(1,17,1),H2017) , (XNMMC(1,18,1),H2018) , (XNMMC(1,19,1),
                   7 H2019) , (XNMMC(1,20,1),H2020) , (XNMMC(1,21,1),H2021) ,
                   8(XNMMC(1,22,1),H2022) , (XNMMC(1,23,1),H2023) , (XNMMC(1,24,1),
                   9H2024) , (XNMMC(1,25,1),H2025) , (XNMMC(1,26,1),H2026) ,
                   $(XNMMC(1,27,1),H2027) , (XNMMC(1,28,1),H2028) , (XNMMC(1,29,1),
                   $H2029) , (XNMMC(1,30,1),H2030)
```

```
ISN 0009        EQUIVALENCE (XNMMC(1,1,2),BE1) , (XNMMC(1,2,2),BE2) ,
               1(XNMMC(1,3,2),BE3) , (XNMMC(1,4,2),BE4) , (XNMMC(1,5,2),BE5) ,
               2(XNMMC(1,6,2),BE6) , (XNMMC(1,7,2),BE7) , (XNMMC(1,8,2),BE8) ,
               3(XNMMC(1,9,2),BE9) , (XNMMC(1,10,2),BE10),(XNMMC(1,11,2),BE11) ,
               4(XNMMC(1,12,2),BE12),(XNMMC(1,13,2),BE13),(XNMMC(1,14,2),BE14) ,
               5(XNMMC(1,15,2),BE15),(XNMMC(1,16,2),BE16),(XNMMC(1,17,2),BE17) ,
               6(XNMMC(1,18,2),BE18),(XNMMC(1,19,2),BE19),(XNMMC(1,20,2),BE20)
ISN 0010        EQUIVALENCE (XNMMC(1,1,3),C1) , (XNMMC(1,2,3),C2) , (XNMMC(1,3,3),
               1C3) , (XNMMC(1,4,3),C4) , (XNMMC(1,5,3),C5) , (XNMMC(1,6,3),C6) ,
               2(XNMMC(1,7,3),C7) , (XNMMC(1,8,3),C8) , (XNMMC(1,9,3),C9) ,
               3(XNMMC(1,10,3),C10) , (XNMMC(1,11,3),C11) , (XNMMC(1,12,3),C12) ,
               4(XNMMC(1,13,3),C13) , (XNMMC(1,14,3),C14) , (XNMMC(1,15,3),C15) ,
               5(XNMMC(1,16,3),C16) , (XNMMC(1,17,3),C17) , (XNMMC(1,18,3),C18) ,
               6(XNMMC(1,19,3),C19) , (XNMMC(1,20,3),C20)
ISN 0011        EQUIVALENCE (WIDTHT(2,1),WIX)
ISN 0012        DATA  NBMID/4H    ,4H    ,4H    ,4H    ,4HWATE,4HR DA,4HTA.1,
               1   4HAVG.,4H 63 ,4H(3) ,4H10,8,4H,6,5,4H,4,3,4H,2,1,4H,0.6,4H7,0.,
               2   4H33  ,4HMEV ,4H    ,4H    ,4HBERL,4HLIUM,4H DAT,4HA 20,4H NOV,
               3   4H63  ,4H(2) ,4H10,8,4H,6,5,4H,4,3,4H,2,1,4H,0.6,4H7,0.,4H33  ,
               4   4HMEV ,4H    ,4H    ,4H    ,4H    ,4H    ,4HCARB,4HON  ,4HDATA,
               5   4H 20 ,4HNOV ,4H 63.,4H10,8,4H,6,5,4H,4,3,4H,2,1,4H,0.6,4H7,0.,
               6   4H33  ,4HMEV /  ,NASET/ 3,2,2/ , RMXSEC/ 0.101,0.0717,0.0407/,
               7   BREAK/ 3*20.0,120.0,2*1000.0/
ISN 0013        DATA CONVN/ 7.0E-9,7.08E-9,6.62E-9,5.80E-9,5.10E-9,4.53E-9,4.15E-9
               1 ,3.80E-9,2.66E-9,1.95E-9 / ,HISTN/ 3.0,2.0,1.5,4*1.0,0.665,0.335,
               2  0.4 / , EN /  10.0,8.0,6.0,5.0, 4.0,3.0, 2.0,1.0,0.67,0.33/
ISN 0014        DATA FEABSN/2.25E-15, 9.27E-16, 5.47E-16, 4.68E-16, 3.80E-16,
               1  3.07E-16, 2.16E-16, 1.04E-16, 8.35E-17, 4.67E-17/,WTN     /
               2  7.47E-14, 6.85E-14, 4.97E-14, 3.94E-14, 3.01E-14, 2.47E-14,
               3  8.24E-15, 5.09E-15, 3.98E-15, 2.86E-15,+6.09E-15, 6.82E-15,
               4  6.12E-15, 7.18E-15, 8.62E-15, 6.44E-15, 4.24E-15, 2.72E-15,
               5  2.10E-15, 1.44E-15,+7.14E-15, 5.00E-15, 3.53E-15, 2.53E-15,
               6  1.82E-15, 1.42E-15, 9.85E-16, 5.57E-16, 4.38E-16, 3.35E-16/
```

```
ISN 0015    DATA WIDTHN / 4H12.-,4H9.0-,4H7.0-,4H5.5-,4H4.5-,4H3.5-,4H2.5-,
           1        4H1.5-,4H0.83,4H0.5-,4H9.0 ,4H7.0 ,4H5.5 ,4H4.5 ,4H3.5 ,
           2        4H2.5 ,4H1.5 ,4H.83 ,4H-.5 ,4H.10 /
ISN 0016    DATA UNITN / 4H   R,4HAD  ,4H    ,4H WAT,4HTS P,4HER  ,4H  PE,
           14HR SE,4HC   ,4H   G,4HRAM ,4H    /,UNITND/4H RAD,4H PER,4H SEC/,
           2    UNITNI / 4HHEAT,4HING ,4HRATE,4HHEAT,4HING ,4HRATE,4HHEAT,
           3      4HING ,4HRATE,4HIN B,4HERYL,4HLIUM,4H  IN,4H CAR,4HBON ,
           4      4H IN ,4HALUM,4HINUM,4HWATT,4HS PE,4HR GM,4HWATT,4HS PE,
           5      4HR GM,4HWATT,4HS PE,4HR GM/  , WIX                /4H12.0,
           6      4H-.10 /
ISN 0017    DATA H201      / 2*0.0, -4.7964E-4,-6.7966E-2,-7.0632 /          WATER
ISN 0018    DATA H202      / 2*0.0, -3.0930E-5,-8.2070E-2,-6.9569 /
ISN 0019    DATA H203      / 2*0.0,  0.0       ,-8.9493E-2,-6.5115 /          H201
ISN 0020    DATA H204      / 2*0.0, -3.3783E-4,-7.5141E-2,-5.4968 /          THUR
ISN 0021    DATA H205      / 2*0.0, -4.0707E-5,-8.5463E-2,-5.4023 /          H2030
ISN 0022    DATA H206      / 2*0.0,  0.0       ,-9.5233E-2,-4.8161 /
ISN 0023    DATA H207      / 2*0.0, -3.1700E-4,-8.6042E-2,-3.9954 /
ISN 0024    DATA H208      / 2*0.0, +7.0389E-6,-9.8638E-2,-3.8668 /
ISN 0025    DATA H209      / 2*0.0,  0.0       ,-9.6949E-2,-3.9682 /
ISN 0026    DATA H2010     / 2*0.0, -4.2298E-4,-9.0754E-2,-3.2834 /
ISN 0027    DATA H2011     / 2*0.0,  5.2499E-5,-1.0890E-1,-3.1062 /
ISN 0028    DATA H2012     / 2*0.0,  0.0       ,-9.6300E-2,-3.8622 /
ISN 0029    DATA H2013     / 2*0.0, -1.2208E-3,-8.2429E-2,-2.6064 /
ISN 0030    DATA H2014     / 2*0.0,  1.3977E-4,-1.2748E-1,-2.2293 /
ISN 0031    DATA H2015     / 2*0.0,  0.0       ,-9.3935E-2,-4.2420 /
ISN 0032    DATA H2016     / 2*0.0, -1.2836E-3,-8.8271E-2,-1.9805 /
ISN 0033    DATA H2017     / 2*0.0,  1.9605E-4,-1.3878E-1,-1.5573 /
ISN 0034    DATA H2018     / 2*0.0,  0.0       ,-9.1728E-2,-4.3804 /
ISN 0035    DATA H2019     / 2*0.0, -1.2418E-3,-9.4567E-2,-1.4313 /
ISN 0036    DATA H2020     / 2*0.0,  2.4563E-4,-1.4801E-1,-.98306 /
ISN 0037    DATA H2021     / 2*0.0,  0.0       ,-8.9059E-2,-4.5201 /
ISN 0038    DATA H2022     / 2*0.0, -1.8744E-3,-7.9836E-2,-1.0584 /
ISN 0039    DATA H2023     / 2*0.0,  2.7869E-4,-1.5372E-1,-.50610 /
ISN 0040    DATA H2024     / 2*0.0,  0.0       ,-8.6834E-2,-4.5192 /
ISN 0041    DATA H2025     / 2*0.0, -3.4588E-3,-3.9416E-2,-1.0272 /
ISN 0042    DATA H2026     / 2*0.0,  2.5256E-4,-1.5000E-1,-.35757 /
ISN 0043    DATA H2027     / 2*0.0,  0.0       ,-8.9386E-2,-3.9944 /
ISN 0044    DATA H2028     / 2*0.0, -6.2191E-3, 3.2164E-2,-1.1394 /
```

```
ISN 0045    DATA H2029    / 2*0.0,  2.0862E-4,-1.4348E-1,-.23550 /
ISN 0046    DATA H2030    / 2*0.0,  0.0       ,-9.3411E-2,-3.2396 /
ISN 0047    DATA BE1      / 2*0.0, -1.2234E-2, 8.4637E-2,-4.9920 /        BERYLL-
ISN 0048    DATA BE2      / 2*0.0,  3.1479E-4,-1.1907E-1,-5.3361 /            IUM
ISN 0049    DATA BE3      / 2*0.0, -1.3287E-2, 9.3035E-2,-3.2217 /
ISN 0050    DATA BE4      / 2*0.0,  1.1774E-4,-8.9409E-2,-4.6527 /            BE1
ISN 0051    DATA BE5      / 2*0.0, -3.2261E-3,-8.6706E-3,-3.7324 /           THUR
ISN 0052    DATA BE6      / 2*0.0,  1.2690E-4,-9.4605E-2,-3.0843 /           BE20
ISN 0053    DATA BE7      / 2*0.0, -1.4289E-3,-2.5401E-2,-3.3992 /
ISN 0054    DATA BE8      / 2*0.0,  1.3444E-4,-1.0010E-1,-2.1737 /
ISN 0055    DATA BE9      / 2*0.0, -1.9288E-3,-2.3220E-2,-2.6014 /
ISN 0056    DATA BE10     / 2*0.0,  1.4753E-4,-1.0897E-1,-1.1695 /
ISN 0057    DATA BE11     / 2*0.0, -2.9436E-3, 1.1843E-2,-1.9739 /
ISN 0058    DATA BE12     / 2*0.0,  1.7318E-4,-1.1873E-1,-.06274 /
ISN 0059    DATA BE13     / 2*0.0, -4.2407E-3, 7.6123E-2,-1.4296 /
ISN 0060    DATA BE14     / 2*0.0,  1.0318E-4,-1.0137E-1, 1.0190 /
ISN 0061    DATA BE15     / 2*0.0, -4.5813E-3, 9.6429E-2,-.92533 /
ISN 0062    DATA BE16     / 2*0.0,  8.0586E-5,-9.6399E-2, 1.6951 /
ISN 0063    DATA BE17     / 2*0.0, -4.0161E-3, 7.9664E-2,-.34376 /
ISN 0064    DATA BE18     / 2*0.0,  8.3197E-5,-9.7349E-2, 2.1672 /
ISN 0065    DATA BE19     / 2*0.0, -1.0296E-2, 2.7853E-1,-1.1086 /
ISN 0066    DATA BE20     / 2*0.0,  8.0001E-5,-9.7011E-2, 2.8446 /
ISN 0067    DATA C1       / 2*0.0, -1.7273E-3, 2.0088E-3,-6.9812 /        CARBON
ISN 0068    DATA C2       / 2*0.0, -1.8451E-5,-3.1912E-2,-7.0261 /
ISN 0069    DATA C3       / 2*0.0, -1.4388E-3,-2.1235E-3,-5.4195 /            C1
ISN 0070    DATA C4       / 2*0.0, -2.1208E-5,-3.0424E-2,-5.4601 /           THUR
ISN 0071    DATA C5       / 2*0.0, -1.7930E-3, 1.3715E-2,-3.9687 /           C20
ISN 0072    DATA C6       / 2*0.0, -2.5302E-5,-3.1902E-2,-3.7930 /
ISN 0073    DATA C7       / 2*0.0, -2.2111E-3, 2.9124E-2,-3.2849 /
ISN 0074    DATA C8       / 2*0.0, -2.7849E-5,-3.3753E-2,-2.9216 /
ISN 0075    DATA C9       / 2*0.0, -2.7899E-3, 4.9526E-2,-2.6288 /
```

```
ISN 0076          DATA C10        / 2*0.0, -3.0730E-5,-3.6346E-2,-2.0249 /
ISN 0077          DATA C11        / 2*0.0, -3.8700E-3, 7.8850E-2,-1.9553 /
ISN 0078          DATA C12        / 2*0.0, -1.9790E-5,-4.3441E-2,-1.0494 /
ISN 0079          DATA C13        / 2*0.0, -4.0514E-3, 1.0095E-1,-1.4500 /
ISN 0080          DATA C14        / 2*0.0, -5.3192E-5,-3.9586E-2,-.21493 /
ISN 0081          DATA C15        / 2*0.0, -4.1276E-3, 1.2751E-1,-1.0624 /
ISN 0082          DATA C16        / 2*0.0, -1.0727E-4,-3.0980E-2, .55133 /
ISN 0083          DATA C17        / 2*0.0, -4.4253E-3, 1.3942E-1,-.92183 /
ISN 0084          DATA C18        / 2*0.0, -1.3370E-4,-2.6230E-2, .72443 /
ISN 0085          DATA C19        / 2*0.0, -4.0448E-3, 1.0579E-1,-1.0145 /
ISN 0086          DATA C20        / 2*0.0, -1.0182E-4,-3.1616E-2, .18439 /
ISN 0087          END
```

```
COMPILER OPTIONS - NAME=  MAIN,OPT=00,LINECNT=56,SOURCE,BCD,NOLIST,DECK,LOAD,MAP,NOEDIT,NOID

ISN 0002            BLOCK DATA
                C**************
                C     XSECO BLOCK DATA
                C**************
ISN 0003            COMMON /STDATA/
                   1 NAME  (100)  , ENRG  (20)    , XSECO (20,100),XSECEA(20)    ,
                   2 C    ( 216 )  , EMINBB(8)     , NAMB(12)      , XSECNT(100)  ,DCONST
ISN 0004            REAL * 4        NITROG,NEON,MAGNS,MANGO,IRON,NIOB,INDIUM,IODINE,
                   1LANTH,LUTET,IRD,MER,LEAD
ISN 0005            REAL*4 LITHX
ISN 0006            REAL * 4 LITH , NICKEL , KRYPT , MOLY , NEOD
ISN 0007            DIMENSION LITHX(20)
ISN 0008            DIMENSION CALCI(20)
ISN 0009            DIMENSIONHYDRO(20),HELIUM(20),LITH(20),PROT(20),
                   1ANT(20),EUROP(20),GOLD(20)
ISN 0010            DIMENSION BERLI(20),BORON(20),CARBON(20),NITROG(20),OXYGEN(20),
                   1FLUO(20),NEON(20),SODIUM(20),MAGNS(20),ALUMI(20),SILIC(20),PHOS(20
                   2),SULPH(20),CHLOR(20),ARGON(20),POTAS(20),SCAND(20),TANTO(20),
                   3VANAD(20),CHROM(20),MANGO(20),IRON(20),COBALT(20),NICKEL(20),
                   4         ZINC(20),GALL(20),GERMAN(20),ARSEN(20),SELEN(20),BROMIN(20
                   5),KRYPT(20),RUBID(20),STRONT(20),YTTRIU(20),ZIRCON(20),NIOB(20)
                   6,COPPER(20)
ISN 0011            DIMENSION MOLY(20),TECHNE(20),RUTH(20),RHOD(20),PALL(20),SILVER(20
                   1),CAD(20),INDIUM(20),TIN(20),TELL(20),IODINE(20), ENON(20),CESIUM
                   2(20),BARIUM(20),LANTH(20),CERIUM(20),PRAS(20), NEOD(20),PROME(20),
                   3SAMAR(20),GADOL(20),TERB(20),DYSP(20),HOL(20),ERBIUM(20),THUL(20),
                   4YTTERB(20),LUTET(20),HAF(20),TANT(20),TUNG(20),RHEN(20),OSMIUM(20)
                   5,IRD(20),PLAT(20),MER(20),THALL(20),LEAD(20),BIMUTH(20),POLON(20),
                   6ASTAT(20),RADON(20),FRAN(20),RADIUM(20),ACTI(20),THOR(20),URAN(20)
ISN 0012            DIMENSION DOH2O(24) , DOALUM(24) , DOIRON(24) ,
                   1 DOLEAD(24) , ENH2O(24) , ENALUM(24) , ENFE(24) ,
                   2 ENPBLE(24) , ENPBHE(24)
ISN 0013            EQUIVALENCE  (C(1),DOH2O)  ,  (C(25),DOALUM) ,
                   1  (C(49),DOIRON)  ,  (C(73),DOLEAD)  ,
                   2  (C(97),ENH2O)  ,  (C(121),ENALUM)  ,
```

```
                3(C(145),ENFE)  ,  (C(169),ENPBLE)  ,
                4  (C(193),ENPBHE)
ISN 0014         EQUIVALENCE(XSECO(1),HYDRO),(XSECO(21),HELIUM),
                1(XSECO(41),LITH),(XSECO(1801),PROT)
ISN 0015         EQUIVALENCE (XSECO(61),BERLI) , (XSECO(81),BORON) , (XSECO(101),
                1CARBON) , (XSECO(121),NITROG) , (XSECO(141),OXYGEN) , (XSECO(161),
                2FLUO) , (XSECO(181),NEON) , (XSECO(201),SODIUM) , (XSECO(221),
                3MAGNS) , (XSECO(241),ALUMI) , (XSECO(261),SILIC) , (XSECO(281),
                4PHOS) , (XSECO(301),SULPH) , (XSECO(321),CHLOR)
ISN 0016         EQUIVALENCE (XSECO(341),ARGON) , (XSECO(361),POTAS) , (XSECO(381),
                1CALCI) , (XSECO(401),SCAND) , (XSECO(421),TANTO) , (XSECO(441),
                2VANAD) , (XSECO(461),CHROM) , (XSECO(481),MANGO) , (XSECO(501),
                3IRON) , (XSECO(521),COBALT) , (XSECO(541),NICKEL) , (XSECO(561),
                4COPPER) , (XSECO(581),ZINC) , (XSECO(601),GALL)
ISN 0017         EQUIVALENCE  (XSECO(621),GERMAN) , (XSECO(641),ARSEN) , (XSECO(661
                1),SELEN) , (XSECO(681),BROMIN) , (XSECO(701),KRYPT) , (XSECO(721),
                2RUBID) , (XSECO(741),STRONT) , (XSECO(761),YTTRIU) , (XSECO(781),
                3ZIRCON) , (XSECO(801),NIOB) , (XSECO(821),MOLY) , (XSECO(841),
                4TECHNE) , (XSECO(861),RUTH) , (XSECO(881),RHOD) , (XSECO(901) ,
                5PALL) , (XSECO(921),SILVER) , (XSECO(941),CAD)
ISN 0018         EQUIVALENCE (XSECO(961),INDIUM) , (XSECO(981),TIN) , (XSECO(1001),
                1ANT), (XSECO(1021),TELL) , (XSECO(1041),IODINE) , (XSECO(1061),
                2 ENON) , (XSECO(1081),CESIUM) , (XSECO(1101),BARIUM) , (XSECO(1121
                3),LANTH) , (XSECO(1141),CERIUM) , (XSECO(1161),PRAS) , (XSECO(1181
                4),NEOD) , (XSECO(1201),PROME) , (XSECO(1221),SAMAR) , (XSECO(1241)
                5,EUROP),  (XSECO(1261),GADOL) , (XSECO(1281),TERB)
ISN 0019         EQUIVALENCE  (XSECO(1301),DYSP) , (XSECO(1321),HOL) , (XSECO(1341)
                1,ERBIUM) , (XSECO(1361),THUL) , (XSECO(1381),YTTERB) , (XSECO(1401
                2),LUTET) , (XSECO(1421),HAF) , (XSECO(1441),TANT) , (XSECO(1461),
                3TUNG) , (XSECO(1481),RHEN) , (XSECO(1501),OSMIUM) , (XSECO(1521),
                4 IRD) , (XSECO(1541),PLAT) , (XSECO(1561),GOLD),(XSECO(1581), MER)
                5 , (XSECO(1601),THALL) , (XSECO(1621),LEAD)
ISN 0020         EQUIVALENCE  (XSECO(1641),BIMUTH) , (XSECO(1661),POLON) , (XSECO(
                11681),ASTAT) , (XSECO(1701),RADON) , (XSECO(1721),FRAN) , (XSECO(
                21741),RADIUM) , (XSECO(1761),ACTI) , (XSECO(1781),THOR) , (XSECO(
                31821),URAN)
ISN 0021         EQUIVALENCE (XSECO(1981),LITHX)
```

```
ISN 0022    DATA ENRG              /.05,.06,.08,.1,.15,.2,.3,.4,.5,.6,.8,1.,1.5,
           12.,3.,4.,5.,6.,8.,10./
ISN 0023    DATA  XSECNT/.602,0.14989,0.08763,0.07153,0.05401,0.04063,0.04283,    1-7
           1  0.03728,0.04091,0.03437,0.03213,0.03121,0.02925,0.02898,0.02755,    8-15
           2  0.02706,0.02570,0.02416,0.02443,0.02412,0.02270,0.02200,0.02131,   16-23
           3  0.02109,0.02050,0.02136,0.01977,0.01940,0.01934,0.01874,0.01813,   24-31
           4  0.01775,0.01747,0.01700,0.01690,0.01649,0.01632,0.01611,0.01599,   32-39
           5  0.01559,0.01563,0.01537,0.01513,0.01496,0.01483,0.01455,0.01447,   40-47
           6  0.01417,0.01401,0.01378,0.01360,0.01327,0.01331,0.01308,0.01299,   48-55
           7  0.01278,0.01270,0.01264,0.01261,0.01246,0.01242,0.01219,0.01212,   56-63
           8  0.01191,0.01185,0.01171,0.01162,0.01154,0.01148,0.01134,0.01128,   64-71
           9  0.01116,0.01108,0.01101,0.01092,0.01080,0.01074,0.01066,0.01061,   72-79
           X  0.01051,0.01041,0.01026,0.01006,0.01026,0.01024,0.00997,0.00994,   80-87
           Y  0.00988,0.00986,0.00974,0.00977,0.00911,0.00964,0.00954,0.00952,   88-95
           Z 0.00948,0.00940,0.00940,0.00930,0.187/                              96-100
ISN 0024    DATA NAMB/4HH2O ,4HAL D,4HFE D,4HPB D,4HH2O ,4HAL E,
           X          4HFE E,4HPB E,4H    ,4H    ,4H    ,4H    /
ISN 0025    DATA  NAME              /4H H  ,4H HE ,4H LI ,4H BE ,4H B  ,4H C  ,   1-6
           N4H N  ,4H O  ,4H F  ,4H NE ,4H NA ,4H MG ,4H AL ,4H SI ,4H P  ,      7-15
           X4H S  ,4H CL ,4H-AR ,4H K  ,4H CA ,4H SC ,4H TI ,4H V  ,4H CR ,     16-24
           P4H MN ,4H FE ,4H CO ,4H NI ,4H CU ,4H ZN ,4H GA ,4H GE ,4H AS ,     25-33
           Q4H SE ,4H BR ,4H KR ,4H RB ,4H SR ,4H Y  ,4H ZR ,4H NB ,4H MO ,     34-42
           R4H TC ,4H RV ,4H RH ,4H PD ,4H AG ,4H CD ,4H IN ,4H SN ,4H SB ,     43-51
           S4H TE ,4H I  ,4H XE ,4H CS ,4H BA ,4H LA ,4H CE ,4H PR ,4H ND ,     52-60
           T4H PM ,4H SM ,4H EV ,4H GD ,4H TB ,4H DY ,4H HO ,4H ER ,4H TM ,     61-69
           U4H YB ,4H LU ,4H HF ,4H TA ,4H W  ,4H RE ,4H OS ,4H IR ,4H PT ,     70-78
           V4H AU ,4H HG ,4H TL ,4H PB ,4H BI ,4H PO ,4H AT ,4H RN ,4H FR ,     79-87
           W4H RA ,4H AC ,4H TH ,4H PA ,4H U  ,4H NP ,4H PU ,4H AM ,4H CM ,     88-96
           X4H BK ,4H CF ,4H ES ,4H LIH/                                         97-100
ISN 0026    DATA  EMINBB/ 0.255, 3*0.5, 0.255, 3*0.5/
ISN 0027    DATA DOH2O/
           1  +1.01094E+0,+1.16772E-1,-7.65869E-3,+1.67068E-4,-6.00394E-2,
           2  +2.32125E+0,-1.79023E-2,+5.69295E-4,+7.20778E-2,-2.12801E+0,
           3  +2.41735E-1,-7.96332E-3,-3.01498E-2,+7.67783E-1,-4.34443E-2,
           4  +7.23758E-3,+3.94733E-3,-9.08139E-2,-1.34203E-3,-9.87237E-4/
```

```
ISN 0028          DATA DOALUM/
                 1                                                +1.00768E+0,
                 2  -1.03807E-2,+1.30705E-2,-3.29348E-4,-4.98085E-2,+3.32216E+0,
                 3  -1.58167E-1,+4.60315E-3,+7.23425E-2,-5.52427E+0,+6.89496E-1,
                 4  -2.04255E-2,-3.93841E-2,+4.16700E+0,-5.59836E-1,+2.00554E-2,
                 5  +7.35778E-3,-1.04638E+0,+1.41308E-1,-5.29934E-3/
ISN 0029          DATA DOIRON       /    +1.01460E+0,-4.12104E-2,
                 1  +1.88074E-3,+1.20198E-3,-1.88657E-1,+2.72752E+0,+1.00217E-1,
                 2  -9.83313E-3,+6.38649E-1,-3.76728E+0,-1.31988E-1,+2.06002E-2,
                 3  -6.55159E-1,+2.42384E+0,+1.68976E-1,-1.75251E-2,+1.90742E-1,
                 4  -5.54657E-1,-5.80710E-2,+4.75673E-3/
ISN 0030          DATA DOLEAD/
                 1                          9.59342E-1,+6.78254E-2,-2.26626E-2,
                 2  +6.39872E-4,+1.13722E-1,+4.50412E-1,+7.55191E-3,+1.52094E-4,
                 3  -7.39816E-2,-2.15037E-1,+5.10254E-3,-6.04837E-4,+1.87767E-2,
                 4  +4.05189E-2,-1.89332E-3,+2.42263E-4,-2.04254E-3,-3.40802E-3,
                 5  +1.93415E-4,-2.93865E-5,+7.93621E-5,+1.06510E-4,-6.24306E-6,
                 6  +1.13914E-6/
ISN 0031          DATA ENH2O  / +1.00935E+0,+6.75909E-2,-2.88512E-3,+3.54158E-5,
                 1  -5.05187E-2,+2.73952E+0,-7.11806E-2,+1.98272E-3,+5.93863E-2,
                 2  -2.82306E+0,+3.98796E-1,-1.19564E-2,-2.43717E-2,+1.11668E+0,
                 3  -1.50948E-1,+9.52922E-3,+3.14779E-3,-1.41350E-1,+1.65266E-2,
                 4  -1.36541E-3/
ISN 0032          DATA ENALUM/
                 1  +9.97130E-1,-3.85219E-2,+1.27816E-2,-3.39093E-4,+6.54640E-2,
                 2  +3.27946E+0,-1.64393E-1,+5.04304E-3,-2.68716E-1,-4.74349E+0,
                 3  +7.45795E-1,-2.38346E-2,+2.84908E-1,+3.39495E+0,-6.26720E-1,
                 4  +2.53658E-2,-8.33177E-2,-8.37392E-1,+1.66032E-1,-7.07268E-3/
ISN 0033          DATA ENFE/                                       +1.00009E+0,
                 1  -9.76981E-2,+3.07480E-3,+5.43036E-4,-2.69391E-2,+2.81567E+0,
                 2  +5.47069E-2,-3.05850E-3,+1.06797E-1,-3.14590E+0,-1.33763E-4,
                 3  +2.43681E-3,-1.11725E-1,+1.91566E+0,+1.03003E-1,-1.57016E-3,
                 4  +3.27028E-2,-4.17820E-1,-4.79248E-2,+5.35111E-4/
ISN 0034          DATA ENPBLE/
                 1                                     +9.99305E-1,-3.49764E-1,
                 2  +2.89886E-2,+1.28555E-3,+1.13017E-2,+2.79914E+0,-7.10002E-2,
                 3  -4.75607E-3,-3.44367E-3,-2.20399E+0,-1.11108E-2,+7.04843E-3,
                 4  +2.04092E-3,+5.02301E-1,+1.45444E-2,-2.31052E-3/
```

```
ISN 0035    DATA ENPBHE/                    +1.02626E+0,+4.15814E-1,+5.64179E-2,
           1  -4.83073E-3,-7.44724E-3,-6.14701E-2,-1.42153E-2,+1.76866E-3,
           2  +3.81090E-4,+3.09491E-3,+7.33689E-4,-1.07370E-4/
ISN 0036    DATA HYDRO /.335,.326,.309,.295,.265,.243,.212,.189,                HYDROGEN
           X.173,.160,.140,.126,.103,.0876,.0691,.0579,.0502,.0446,.0371,
           Y.0321/
ISN 0037    DATA HELIUM    /.1688,.1640,.1560,.1480,.1330,.1220,.1060,          HELIUM
           X.0953,.0870,.0805,.0707,.0635,.0516,.0442,
           Y.0349,.0295,.0257,.0231,.0194,.0169/
ISN 0038    DATA LITH      /.1469,.1423,.1347,.1268,.1150,.1060,.0921,          LITHIUM
           X.0825,.0754,.0696,.0612,.0550,.0447,.0382,
           Y.0304,.0257,.0225,.0203,.0172,.0152/
ISN 0039    DATA BERLI     /.151,.146,.138,.132,.119,.109,.0945,.0847,          BERYLIUM
           X.0773,.0715,.0628,.0565,.0459,.0394,.0313,.0266,.0234,.0211,.018,
           Y.0161 /
ISN 0040    DATA BORON     /.1608,.1536,.1463,.1380,.1237,.1139,.0985,          BORON
           X.0881,.0805,.0745,.0654,.0588,.0478,.0410,
           Y.0321,.0279,.0247,.0224,.0193,.0175/
ISN 0041    DATA CARBON    /.178,.169,.157,.149,.134,.122,.106,.0953,           CARBON
           X.087,.0805,.0707,.0636,.0518,.0444,.0356,.0304,.027,.0245,.0213,
           Y.0194 /
ISN 0042    DATA NITROG    /.185,.173,.159,.15,.134,.123,.106,.0955,.0869,      NITROGEN
           X.0805,.0707,.0636,.0517,.0445,.0357,.0306,.0273,.0249,.0218,
           Y.02 /
ISN 0043    DATA OXYGEN    /.197,.18,.162,.151,.134,.123,.107,.0953,            OXYGEN
           X.087,.0806,.0708,.0636,.0518,.0445,.0359,.0309,.0276,.0254,.0224,
           Y.0206 /
ISN 0044    DATA FLUO      /.1987,.1786,.1565,.1448,.1275,.1780,.1016,          FLUORINE
           X.0905,.0826,.0762,.0670,.0602,.0491,.0422,
           Y.0342,.0296,.0266,.0245,.0218,.0203 /
ISN 0045    DATA NEON      /.231,.1992,.1688,.1536,.1337,.1226,.1054,           NEON
           X.0947,.0863,.0797,.0701,.0630,.0514,.0442,
           Y.0359,.0312,.0281,.0260,.0233,.0218 /
ISN 0046    DATA SODIUM    /.248,.206,.168,.151,.13,.118,.102,.0912,            SODIUM
           X.0833,.077,.0676,.0608,.0496,.0427,.0348,.0303,.0274,.0254,.0229,
           Y.0215 /
ISN 0047    DATA MAGNS     /.293,.232,.181,.16,.135,.122,.106,.0944,            MAGNSIUM
           X.086,.0795,.0699,.0627,.0512,.0442,.036,.0315,.0286,.0266,.0242,
           Y.0228 /
```

```
ISN 0048        DATA ALUMI      /.326,.248,.186,.161,.134,.12,.103,.0922,          ALUMINUM
               X.084,.0777,.0683,.0614,.05,.0432,.0353,.031,.0282,.0264,.0241,
               Y.0229 /
ISN 0049        DATA SILIC      /.389,.288,.205,.172,.139,.125,.107,.0954,         SILICON
               X.0869,.0802,.0706,.0635,.0517,.0447,.0367,.0323,.0296,.0277,.0254,
               Y.0243 /
ISN 0050        DATA PHOS       /.432,.311,.211,.174,.137,.122,.104,.0928,          PHOS-
               X.0846,.078,.0685,.0617,.0502,.0436,.0358,.0316,.029,.0273,.0252,   PHORUS
               Y.0242 /
ISN 0051        DATA SULPH      /.518,.363,.234,.188,.144,.127,.108,.0958,         SULPHER
               X.0874,.0806,.0707,.0635,.0519,.0448,.0371,.0328,.0302,.0284,.0266,
               Y.0255 /
ISN 0052        DATA CHLOR      /.584,.3957,.2451,.1902,.1403,.1223,.1033,         CHLORINE
               X.0922,.0839,.0775,.0680,.0609,.0498,.0432,
               Y.0358,.0318,.0295,.0280,.0262,.0252 /
ISN 0053        DATA ARGON      /.629,.420,.249,.188,.135,.117,.0977,.0867           ARGON
               X,.079,.073,.0638,.0573,.0468,.0407,.0338,.0301,.0279,.0266,.0248,
               Y.0241 /
ISN 0054        DATA POTAS      /.782,.514,.293,.215,.149,.127,.106,.0936,         POTASIUM
               X.0852,.0786,.0689,.0618,.0505,.0438,.0365,.0327,.0305,.0289,.0274,
               Y.0267 /
ISN 0055        DATA CALCI      /.929,.597,.33,.238,.158,.132,.109,.0965,          CALCIUM
               X.0876,.0809,.0708,.0634,.0518,.0451,.0376,.0338,.0316,.0302,.0285,
               Y.028 /
ISN 0056        DATA SCAND      /.999,.6317,.3387,.2377,.1507,.1247,.1025,         SCANDIUM
               X.0902,.0819,.0755,.0662,.0593,.0484,.0421,
               Y.0353,.0318,.0299,.0287,.0273,.0267 /
ISN 0057        DATA TANTO      /1.125,.7062,.3677,.2517,.1531,.1253,.101,         TITANIUM
               X.0892,.0809,.0745,.0653,.0586,.0478,.0416,
               Y.0350,.0316,.0298,.0287,.0274,.0269 /
ISN 0058        DATA VANAD      /1.250,.7850,.3999,.2661,.1565,.1249,.100,         VANADIUM
               X.0880,.0797,.0734,.0642,.0576,.0470,.0410,
               Y.0345,.0313,.0296,.0285,.0274,.0270 /
ISN 0059        DATA CHROM      /1.443,.9005,.4516,.2930,.1665,.1302,.103,         CHROMIUM
               X.0904,.0817,.0751,.0657,.0589,.0482,.0419,
               Y.0354,.0322,.0305,.0295,.0285,.0282 /
```

```
ISN 0060        DATA MANGO      /1.599,.9942,.4925,.3108,.1709,.1318,.102,          MANGANES
               X.0895,.0807,.0742,.0648,.0582,.0474,.0414,
               Y.0351,.0320,.0304,.0295,.0286,.0283 /
ISN 0061        DATA   IRON     /1.83,1.13,.555,.344,.183,.138,.106,.0919,              IRON
               X.0828,.0762,.0664,.0595,.0485,.0424,.036,.033,.0313,.0304,.0295,
               Y.0294 /
ISN 0062        DATA COBALT     /2.01,1.235,.5999,.3669,.1880,.1387,.1052,           COBALT
               X.0910,.0817,.0750,.0655,.0588,.0479,.0419,
               Y.0356,.0327,.0312,.0304,.0297,.0296 /
ISN 0063        DATA NICKEL     /2.32,1.427,.6832,.4127,.2550,.1488,.1108,           NICKEL
               X.0951,.0854,.0783,.0682,.0611,.0499,.0437,
               Y.0372,.0343,.0329,.0320,.0314,.0314 /
ISN 0064        DATA COPPER     /2.45, 1.51,.713,.427,.206,.147,.108,.0916,          COPPER
               X.082,.0751,.0654,.0585,.0476,.0418,.0357,.033,.0316,.0309,.0303,
               Y.0305 /
ISN 0065        DATA ZINC       /2.71,1.661,.7773,.4630,.2182,.1519,.1095,              ZINC
               X.0927,.0827,.0756,.0659,.0590,.0481,.0422,
               Y.0362,.0335,.0322,.0316,.0312,.0313/
ISN 0066        DATA GALL       /2.88,1.768,.8150,.4841,.2228,.1527,.1074,          GALLIUM
               X.0904,.0806,.0734,.0639,.0571,.0467,.0410,
               Y.0353,.0327,.0315,.0309,.0307,.0309/
ISN 0067        DATA GERMAN     /3.12,1.905,.8876,.5194,.2320,.1562,.1081,          GERMAN
               X.0904,.0802,.0731,.0634,.0568,.0463,.0407,
               Y.0351,.0327,.0315,.0310,.0308,.0311/
ISN 0068        DATA ARSEN      /3.39,2.08,.9606,.5592,.2440,.1617,.1099,           ARSENIC
               X.0910,.0806,.0733,.0636,.0568,.0464,.0407,
               Y.0353,.0329,.0318,.0313,.0313,.0316/
ISN 0069        DATA SELEN      /3.62,2.20,1.029,.5586,.2515,.1634,.1087,             SELEN
               X.0897,.0792,.0720,.0623,.0556,.0454,.0399,
               Y.0346,.0324,.0315,.0310,.0310,.0314/
ISN 0070        DATA BROMIN     /3.99,2.43,1.135,.6436,.2691,.1727,.1124,            BROMIN
               X.0922,.0810,.0735,.0635,.0567,.0462,.0406,
               Y.0354,.0332,.0323,.0318,.0320,.0325/
ISN 0071        DATA KRYPT      /4.24,2.56,1.203,.6791,.2785,.1753,.1122,           KRYPTON
               X.0913,.0800,.0727,.0625,.0557,.0454,.0400,
               Y.0349,.0329,.0320,.0317,.0318,.0324/
ISN 0072        DATA RUBID      /4.60,2.79,1.309,.7335,.2963,.1826,.1149,           RUBIDIUM
               X.0928,.0811,.0732,.0630,.0562,.0458,.0404,
               Y.0353,.0333,.0325,.0322,.0325,.0331/
```

```
ISN 0073        DATA STRONT     /4.96,3.03,1.406,.7882,.3122,.1900,.1176,          STRONT-
               X.0941,.0817,.0736,.0633,.0564,.0459,.0405,                            IUM
               Y.0355,.0336,.0329,.0326,.0330,.0337/
ISN 0074        DATA YTTRIU     /5.40,3.29,1.542,.8555,.3328,.2002,.1212,          YTTRIUM
               X.0960,.0832,.0743,.0642,.0572,.0465,.0411,
               Y.0361,.0343,.0336,.0334,.0338,.0346/
ISN 0075        DATA ZIRCON     /5.78,3.52,1.658,.9100,.3517,.2085,.1239,          ZIRCON-
               X.0978,.0839,.0752,.0644,.0573,.0466,.0412,                            IUM
               Y.0363,.0345,.0339,.0337,.0343,.0351/
ISN 0076        DATA  NIOB      /6.23,3.80,1.764,.9820,.3724,.2178,.1275,          NIOBIUM
               X.0996,.0850,.0766,.0650,.0578,.0470,.0416,
               Y.0367,.0350,.0344,.0343,.0349,.0359/
ISN 0077        DATA  MOLY      /6.62,4.04,1.86,1.03,.389,.225,.13,.0998,           MOLYB-
               X.0851,.0761,.0648,.0575,.0467,.0414,.0365,.0349,.0344,.0344,.0349,    DENUM
               Y.0359/
ISN 0078        DATA TECHNE     /7.02,4.28,1.958,1.089,.4065,.2328,.1310,          TECHNE-
               X.1003,.0851,.0757,.0646,.0573,.0465,.0412,                            TIUM
               Y.0365,.0349,.0345,.0344,.0353,.0363/
ISN 0079        DATA RUTH       /7.43,4.54,2.075,1.156,.4274,.2411,.1327,          RUTHEN-
               X.1011,.0855,.0759,.0645,.0571,.0464,.0411,                            IUM
               Y.0365,.0351,.0347,.0347,.0356,.0367/
ISN 0080        DATA RHOD       /7.99,4.89,2.220,1.243,.4548,.2543,.1373,          RHODIUM
               X.1039,.0872,.0773,.0655,.0579,.0470,.0417,
               Y.0371,.0357,.0354,.0354,.0364,.0376/
ISN 0081        DATA PALL       /8.39,5.12,2.330,1.301,.4710,.2608,.1391,          PALLAD-
               X.1048,.0869,.0767,.0648,.0573,.0464,.0413,                            IUM
               Y.0368,.0354,.0352,.0353,.0363,.0375/
ISN 0082        DATA SILVER     /8.97,5.49,2.50,1.388,.5014,.2759,.1447,           SILVER
               X.1076,.0886,.0781,.0659,.0582,.0470,.0418,
               Y.0374,.0361,.0359,.0360,.0371,.0384/
ISN 0083        DATA CAD        /9.31,5.71,2.59,1.437,.5168,.2816,.1455,           CADMIUM
               X.1065,.0878,.0771,.0648,.0571,.0462,.0410,
               Y.0368,.0356,.0355,.0357,.0368,.0382/
ISN 0084        DATA  INDIUM    /9.85,6.02,2.75,1.515,.5436,.2940,.1492,            INDIUM
               X.1083,.0887,.0778,.0652,.0574,.0464,.0412,
               Y.0370,.0359,.0358,.0360,.0372,.0387/
```

```
ISN 0085          DATA TIN        /10.2,6.28,2.87,1.58,.563,.303,.153,.109,                TIN
                 X.0886,.0776,.0647,.0568,.0459,.0408,.0367,.0355,.0355,.0358,.0368,
                 Y.0383/
ISN 0086          DATA ANT        /10.74,6.57,3.01,1.650,.5980,.3150,.1557,          ANTIMONY
                 X.1101,.0892,.0780,.0647,.0568,.0458,.0407,
                 Y.0367,.0357,.0357,.0361,.0374,.0389/
ISN 0087          DATA TELL       /11.03,6.75,3.10,1.700,.6040,.3191,.1557,           TELLUR-
                 X.1090,.0879,.0767,.0633,.0555,.0447,.0397,                              IUM
                 Y.0359,.0350,.0351,.0354,.0367,.0383/
ISN 0088          DATA  IODINE    /11.9,7.26,3.34,1.83,.648,.339,.165,.114,            IODINE
                 X.0913,.0792,.0653,.0571,.046,.0409,.037,.036,.0361,.0365,.0377,
                 Y.0394/
ISN 0089          DATA  ENON      /12.11,7.47,3.46,1.905,.6640,.3471,.1679,              ENON
                 X.1146,.0910,.0787,.0647,.0565,.0453,.0404,
                 Y.0366,.0358,.0360,.0365,.0379,.0396/
ISN 0090          DATA CESIUM     /12.60,7.88,3.67,2.012,.7000,.3642,.1745,            CESIUM
                 X.1174,.0929,.0800,.0655,.0572,.0458,.0408,
                 Y.0371,.0363,.0366,.0371,.0385,.0403/
ISN 0091          DATA BARIUM     /13.10,8.16,3.79,2.079,.7180,.3719,.1763,            BARIUM
                 X.1174,.0928,.0798,.0650,.0566,.0453,.0404,
                 Y.0367,.0360,.0363,.0369,.0384,.0402/
ISN 0092          DATA LANTH      /13.69,8.55,4.00,2.195,.7560,.3891,.1839,          LANTHAN-
                 X.1211,.0947,.0812,.0659,.0573,.0458,.0408,                              UM
                 Y.0372,.0365,.0369,.0375,.0390,.0409/
ISN 0093          DATA CERIUM     /14.28,8.99,4.22,2.312,.7990,.4081,.1869,            CERIUM
                 X.1249,.0973,.0828,.0670,.0582,.0464,.0414,
                 Y.0377,.0370,.0375,.0382,.0398,.0417/
ISN 0094          DATA PRAS       /15.06,9.45,4.49,2.460,.8440,.4281,.1989,          PRASEOD-
                 X.1286,.0991,.0847,.0683,.0591,.0470,.0420,                            YMIUM
                 Y.0383,.0377,.0383,.0390,.0407,.0427/
ISN 0095          DATA  NEOD      /15.56,9.75,4.64,2.560,.8720,.4425,.2037,           NEODYM-
                 X.1304,.1000,.0852,.0684,.0591,.0469,.0419,                              IUM
                 Y.0383,.0378,.0384,.0391,.0408,.0429/
ISN 0096          DATA PROME      /16.15,10.14,4.84,2.66,.910,.4578,.2093,           PROMETH-
                 X.1322,.1019,.0861,.0688,.0594,.0470,.0420,                              IUM
                 Y.0384,.0380,.0386,.0394,.0411,.0432/
ISN 0097          DATA SAMAR      /16.54,10.44,5.02,2.76,.940,.4723,.2140,           SARAMIUM
```

```
                X.1351,.1028,.0867,.0690,.0594,.0469,.0419,
                Y.0384,.0380,.0387,.0395,.0412,.0434/
ISN 0098         DATA EUROP        /17.23,10.83,5.24,2.90,.986,.4924,.2216,        EUROPIUM
                X.1388,.1047,.0882,.0700,.0601,.0474,.0424,
                Y.0389,.0385,.0393,.0401,.0419,.0441/
ISN 0099         DATA GADOL        /2.56,10.93,5.35,2.96,1.015,.5031,.2245,        GADOLIN-
                X.1397,.1056,.0880,.0695,.0596,.0469,.0419,                              IUM
                Y.0385,.0382,.0390,.0398,.0419,.0439/
ISN 0100         DATA TERB         /2.64,11.32,5.57,3.09,1.054,.5233,.2311,        TERBIUM
                X.1455,.1075,.0893,.0702,.0600,.0472,.0421,
                Y.0388,.0384,.0393,.0402,.0420,.0443/
ISN 0101         DATA DYSP         /2.75,11.52,5.76,3.20,1.093,.5407,.2368,        DYSPROS-
                X.1454,.1084,.0900,.0706,.0602,.0471,.0422,                              IUM
                Y.0389,.0385,.0395,.0404,.0422,.0446 /
ISN 0102         DATA HOL          /2.91,11.80,5.98,3.32,1.131,.5599,.2434,        HOLMIUM
                X.1492,.1103,.0914,.0713,.0607,.0474,.0424,
                Y.0392,.0388,.0398,.0408,.0426,.0450 /
ISN 0103         DATA ERBIUM       /3.05,12.10,6.21,3.45,1.180,.5791,.2510,        ERBIUM
                X.1530,.1121,.0928,.0720,.0612,.0477,.0427,
                Y.0394,.0392,.0402,.0412,.0431,.0455 /
ISN 0104         DATA THUL         /3.19,12.39,6.42,3.58,1.228,.6012,.2586,        THULIUM
                X.1568,.1150,.0943,.0729,.0618,.0481,.0430,
                Y.0397,.0395,.0406,.0416,.0435,.0460 /
ISN 0105         DATA YTTERB       /3.34,2.01,6.60,3.70,1.257,.6177,.263,          YTTERB-
                X.1596,.1159,.0951,.0732,.0620,.0481,.0428,                              IUM
                Y.0398,.0396,.0406,.0417,.0436,.0462 /
ISN 0106         DATA  LUTET       /3.47,2.13,6.88,3.83,1.315,.6430,.2719,         LUTETIUM
                X.1634,.1188,.0966,.0743,.0627,.0486,.0433,
                Y.0402,.0400,.0411,.0421,.0441,.0467 /
ISN 0107         DATA HAF          /3.61,2.19,7.04,3.92,1.354,.6620,.2777,         HAFNIUM
                X.1662,.1206,.0975,.0747,.0628,.0485,.0433,
                Y.0402,.0401,.0411,.0422,.0442,.0469 /
ISN 0108         DATA TANT         /3.76,2.26,7.29,4.08,1.402,.6850,.2853,         TANTALUM
                X.1700,.1225,.0994,.0757,.0635,.0489,.0436,
                Y.0404,.0405,.0415,.0426,.0447,.0474 /
ISN 0109         DATA TUNG         /3.94,2.34,7.49,4.21,1.44,.708,.293,.174,       TUNGSTEN
                X.125,.101,.0763,.064,.0492,.0437,.0405,.0402,.0409,.0418,.0438,
                Y.0465 /
```

```
ISN 0110          DATA RHEN        /4.12,2.43,7.72,4.35,1.500,.729,.3005,          RHENIUM
                 X.1787,.1272,.1022,.0774,.0645,.0494,.0441,
                 Y.0409,.0409,.0421,.0431,.0453,.0481 /
ISN 0111          DATA OSMIUM      /4.25,2.50,7.92,4.46,1.539,.750,.3063,           OSMIUM
                 X.1815,.1291,.1032,.0778,.0647,.0495,.0440,
                 Y.0409,.0410,.0421,.0431,.0454,.0482 /
ISN 0112          DATA  IRD        /4.41,2.60,8.14,4.61,1.587,.771,.3140,          IRIDIUM
                 X.1862,.1310,.1051,.0787,.0652,.0496,.0443,
                 Y.0411,.0412,.0423,.0433,.0456,.0485 /
ISN 0113          DATA PLAT        /4.58,2.71,8.61,4.75,1.64,.795,.324,.191,       PLATINUM
                 X.135,.107,.08,.0659,.0501,.0445,.0414,.0411,.0418,.0427,.0448,
                 Y.0477 /
ISN 0114          DATA GOLD        /4.75,2.83,1.31,4.91,1.694,.825,.3331,             GOLD
                 X.1957,.1377,.1098,.0811,.0668,.0506,.0451,
                 Y.0419,.0421,.0432,.0442,.0466,.0495 /
ISN 0115          DATA  MER        /4.91,2.94,1.34,5.05,1.742,.848,.3398,          MERCURY
                 X.1995,.1396,.1108,.0819,.0673,.0508,.0452,
                 Y.0421,.0423,.0433,.0443,.0468,.0497 /
ISN 0116          DATA THALL       /5.03,3.01,1.36,5.16,1.8,.866,.346,.204,        THALLIUM
                 X.143,.112,.0824,.0675,.0508,.0452,.042,.0416,.0423,.0433,.0454,
                 Y.0484 /
ISN 0117          DATA  LEAD       /5.19,3.15,1.41,5.29,1.84,.896,.356,.208,          LEAD
                 X.145,.114,.0836,.0684,.0512,.0457,.0421,.042,.0426,.0436,.0459,
                 Y.0489 /
ISN 0118          DATA BIMUTH      /5.38, 3.29,1.46,5.46,1.908,.924,.3667,         BIMUTH
                 X.2140,.1482,.1165,.0850,.0694,.0518,.0461,
                 Y.0429,.0432,.0442,.0450,.0477,.0507 /
ISN 0119          DATA POLON       /5.62,3.42,1.54,5.66,1.975,.962,.3772,          POLONIUM
                 X.2207,.1530,.1193,.0871,.0707,.0527,.0468,
                 Y.0435,.0439,.0448,.0457,.0484,.0515 /
ISN 0120          DATA ASTAT       /5.85,3.58,1.62,5.87,2.053,1.001,.3916,         ASTATINE
                 X.2284,.1577,.1232,.0891,.0722,.0536,.0476,
                 Y.0442,.0446,.0456,.0464,.0492,.0523 /
ISN 0121          DATA RADON       /5.80,3.57,1.62,5.79,2.025,.982,.3861,            RADON
                 X.2246,.1549,.1203,.0868,.0701,.0519,.0460,
                 Y.0428,.0432,.0441,.0449,.0476,.0507 /
```

```
ISN 0122        DATA FRAN        /6.05,3.65,1.68,.920,2.103,1.02,.3986,          FRANCIUM
               X.2323,.1587,.1241,.0887,.0716,.0528,.0467,
               Y.0434,.0438,.0448,.0455,.0483,.0514 /
ISN 0123        DATA RADIUM      /6.26,3.79,1.72,.930,2.161,1.039,.4103,          RADIUM
               X.2371,.1626,.1261,.0900,.0723,.0531,.0470,
               Y.0436,.0440,.0448,.0458,.0485,.0517 /
ISN 0124        DATA ACTI        /6.52,3.90,1.80,.970,2.239,1.078,.4227,         ACTINIUM
               X.2448,.1674,.1299,.0921,.0738,.0540,.0477,
               Y.0443,.0446,.0456,.0456,.0492,.0524 /
ISN 0125        DATA THOR        /6.70,4.06,1.82,1.00,2.269,1.097,.4307,          THORIUM
               X.2478,.1693,.1309,.0925,.0739,.0539,.0476,
               Y.0442,.0444,.0452,.0464,.0490,.0522/
ISN 0126        DATA PROT        /7.04,4.23,1.90,1.05,2.376,1.146,.4489,         PROTACT-
               X.2583,.1760,.1357,.0954,.0762,.0553,.0488,                        INIUM
               Y.0452,.0454,.0464,.0475,.0501,.0534/
ISN 0127        DATA URAN        /7.17,4.28,1.93,1.06,2.42,1.17,.452,.259,        URANIUM
               X.176,.136,.0952,.0757,.0548,.0484,.0445,.044,.0446,.0455,.0479,
               Y.0511/
ISN 0128        DATA LITHX /.171,.166,.157,.152,.134,.123,.107,
               1.096,.0878,.0811,.0711,.064,.052,.0445,.0353,                    LITHIUM
               2.0298,.026,.0234,.0197,.0174/                                    HYDRIDE
ISN 0129        END
```

APPENDIX D. LISTING OF QAD-GEOM (360)

The following is a FORTRAN IV listing of QAD-GEOM (360) for the IBM-360 computer. The program contains the following subroutines:

1. Main Program, p. 151
2. Subroutine INPUT, p. 158
3. Subroutine LENGTH, p. 165
4. KERNEL, p. 168
5. SOURCE, p. 170
6. XSECQD, p. 176
7. PRINT*
8. TITLE*
9. SLITE*
10. SLITET*
11. Subroutine GEOM, p. 178
12. Subroutine JOMIN, p. 181
13. Subroutine LOOKZ, p. 186
14. BLOCK DATA, p. 188
15. Subroutine JOM4, p. 189
16. Subroutine JOM5, p. 192
17. Subroutine JOM6, p. 194
18. Subroutine JOM7, p. 197
19. Function JOM8, p. 199
20. Subroutine JOM9, p. 200
21. Subroutine JM10, p. 202
22. Subroutine JM11, p. 204
23. JM12, p. 206
24. JM13, p. 208
25. JM14, p. 211
26. JM16, p. 212
27. JM17, p. 213
28. LOC‡
29. MOMENT*
30. XSECO*

‡Subroutine LOC is available only as a HEX DECK.

*Listings for these subroutines are not included here since they are identical to ones previously listed under QAD-P5A (360).

```
COMPILER OPTIONS - NAME=  MAIN,OPT=00,LINECNT=50,SOURCE,EBCDIC,NOLIST,NODECK,LOAD,MAP,NOEDIT,NOID

            C      PROGRAM QAD P5A
            C      CROSS-SECTIONS AND NEUTRON PARAMETERS ADDED JULY 1965  G.P.LAHTI
            C  USES GERERALIZED GEOMERTY
            CQAD-P5  MAIN PROGRAM WITH NEUTRON MOMENTS CALCULATION. 5 NEUT. SETS.     QAD-0010
            C        CARTESIAN, SPHERIC, AND CYLINDRIC SOURCE AND DETECTOR OPTIONS    QAD-0020
            C                  AND THE EXPANDED PRINT                                 QAD-0030
ISN 0002          DIMENSION   DGAM(30), UDGAM(30), FNEUT(15,5), AGAM(30), UAGAM(30), QAD-0050
                 1   A NEUT(16,5), SREG(20)                                            QAD-0060
ISN 0003          DIMENSION  IS MAX(3), IS MIN(3)                                    QAD-0070
ISN 0004          DIMENSION  C DET(3), TOTAL G(6), TOTAL N(5,5), GRP G(30,6),        QAD-0180
                 1   GRP N(15,5,5), TOTL GI(6), TOTL NI(3,5), GRP GI(30,6),           QAD-0190
                 2   GRP NI(15,3,5), EG AV(2), EN AV(5)                               QAD-0200
ISN 0005          DIMENSION  UNIT G(18),              UNIT GI(27),                   QAD-0210
                 2   FE ABS G(30),  WIDTHG(30,3),WT G(30,3), NSIND(5,3)               QAD-0230
ISN 0006          COMMON /QADNM/  NBMID(18,3), NASET(3), RMXSEC(3), BREAK(3,2),
                 1 XNMMC(5,30,3), CONVN(10)  , HISTN(10), EN(10)  , FEABSN(10),
                 2 WIDTHN(10,2) , WTN(10,3),       UNITN(12), UNITNI(27),UNITND(3),
                 3 WIDTHT(2,2)
ISN 0007          COMMON /QADATA/
                 1 NSET  (30)   , RSO  (101)   , PHISO (101)  , ZSO  (101)   ,
                 5 HYDRAT(30)   , XSECN (30)   , XSECG (20,30), BILDO (30)   ,
                 6 BILD1 (30)   , BILD2 (30)   , BILD3 (30)   , GAMEN (30)   ,
                 7 CONV  (30)   , COMP  (20,40), EG    (30)   , MATZ  (20)   ,
                 8 FL    (101)  , FN    (101)  , FM    (101)  , XISO  (2,3)  ,
                 9 ASO  , RRC   , ZRC  , PHIRC  , ALF1  , ALF2   ,ALF3   ,
                 X ALF4 , NBLD  , ID(18)
ISN 0008          EQUIVALENCE  (LSO, NSET(1)), (MSO, NSET(2)), (NSO, NSET(3)),      QAD-0430
                 1   (MAT, NSET(4)), (NCOMP, NSET(5)),
                 2   (NRGY, NSET(7)), (NBOUND,NSET(8)), (NS OPT, NSET(9)),          QAD-0450
                 3   (ISRC, NSET(11)), (I NEUT, NSET(12))                           QAD-0460
ISN 0009       1   FORMAT  ( 3E9.4, 2( I5, I4 ))                                    QAD-0720
ISN 0010       5   FORMAT  ( 1H4 )                                                  QAD-0750
ISN 0011       6   FORMAT  ( 1H1, 10X, 18A4 )                                       QAD-0760
ISN 0012       7   FORMAT  ( 1H0, 2X, 4HRCVR, I3, 2X, 2HR=, 1PE12.4, 2X, 2HZ=,     QAD-0770
                 1   1PE12.4, 2X, 4HPHI=, 1PE12.4, 2X, 12HSOURCE POINT, 3I3 )       QAD-0780
ISN 0013       8   FORMAT  ( 1H0, 2X, 4HRCVR, I3, 2X, 2HX=, 1PE12.4, 2X, 2HY=,     QAD-0790
                 1   1PE12.4, 2X, 2HZ=,   1PE12.4, 2X, 12HSOURCE POINT, 3I3 )       QAD-0800
```

```
ISN 0014      9    FORMAT  ( 1H0, 2X, 4HRCVR, I3, 2X, 4HRHO=, 1PE12.4, 2X, 6HTHETA=,   QAD-0810
                  1   1PE12.4, 2X, 4HPHI=, 1PE12.4, 2X, 12HSOURCE POINT, 3I3 )         QAD-0820
ISN 0015      10   FORMAT  ( 1H , 10X, 4HTYPE, I2, 29HGEOMETRY ERROR AT THIS POINT )   QAD-0830
ISN 0016       100 CALL SLITE (0)                                                       QAD-0860
ISN 0017           NO RC = 0                                                            QAD-0870
ISN 0018           IP = 3                                                               QAD-0880
ISN 0019           CALL INPUT
                  1 ( N1PT, UNITG, UNITGI, WIDTHG, NGINT, NNINT, FEABSG, WTG)
ISN 0020           IF  ( NS OPT )  1300,110,110
ISN 0021      110  IF ( ISRC )  1300,1300,120
ISN 0022      120  CALL  SOURCE                                                         QAD-0960
ISN 0023      1300 READ  (5     ,1)RRC, ZRC, PHIRC, N RC OPT, N GPF, N GPL,    N GPI  QAD-0990
ISN 0024           X NL MAX = 0.0                                                      QAD-1000
ISN 0025           X NL MIN = 1000.0                                                   QAD-1010
ISN 0026           C DET(1) = RRC                                                      QAD-1020
ISN 0027           C DET(2) = PHIRC                                                    QAD-1030
ISN 0028           C DET(3) = ZRC                                                      QAD-1040
ISN 0029           IF  ( N RC OPT )   100,1305,1305                                    QAD-1050
ISN 0030      1305 MRC = N RC OPT + 1                                                  QAD-1080
ISN 0031           NO RC = NO RC + 1                                                   QAD-1090
ISN 0032           IF  ( N GPF )  131,131,132                                          QAD-1100
ISN 0033      131  N GPF = NSET(13)                                                    QAD-1110
ISN 0034      132  IF  ( N GPL )  133,133,134                                          QAD-1120
ISN 0035      133  N GPL = NSET(14)                                                    QAD-1130
ISN 0036      134  IF  ( N GPI )  135,135,136                                          QAD-1140
ISN 0037      135  N GPI = N SET(15)                                                   QAD-1150
ISN 0038      136  NGPI= MAX0( 1, NGPI)                                                QAD-1160
ISN 0039      180  GO TO  ( 182, 184, 186 ), MRC                                       QAD-1170
ISN 0040      182  XRCVR = RRC * COS( PHIRC )                                          QAD-1180
ISN 0041           YRCVR = RRC * SIN( PHIRC )                                          QAD-1190
ISN 0042           ZRCVR = ZRC                                                         QAD-1200
ISN 0043           GO TO  200                                                          QAD-1210
ISN 0044      184  XRCVR = RRC                                                         QAD-1220
ISN 0045           YRCVR = PHIRC                                                       QAD-1230
ISN 0046           ZRCVR = ZRC                                                         QAD-1240
ISN 0047           GO TO  200                                                          QAD-1250
ISN 0048      186  XRCVR = RRC * SIN( ZRC )                                            QAD-1260
ISN 0049           YRCVR = XRCVR * SIN( PHIRC )                                        QAD-1270
ISN 0050           XRCVR = XRCVR * COS( PHIRC )                                        QAD-1280
ISN 0051           ZRCVR = RRC * COS( ZRC )                                            QAD-1290
```

```
ISN 0052        200 N GP C = 0                                                  QAD-1300
ISN 0053            IERR3 = 0                                                   QAD-1310
ISN 0054            NERR = 0                                                    QAD-1320
ISN 0055            DO  210  I=1,30                                             QAD-1330
ISN 0056            UDGAM(I) = 0.0                                              QAD-1340
ISN 0057            DGAM(I) = 0.0                                               QAD-1350
ISN 0058        210 CONTINUE                                                    QAD-1360
ISN 0059            DO  220  I=1,15                                             QAD-1370
ISN 0060            DO  220  J=1,5                                              QAD-1380
ISN 0061            F NEUT(I,J) = 0.0                                           QAD-1390
ISN 0062        220 CONTINUE                                                    QAD-1400
ISN 0063            AW NEUT = 0.0                                               QAD-1410
ISN 0064            MS OPT = MAX0( NSOPT+ 1, 1 )                                QAD-1420
ISN 0065            CALL SLITE (1)                                              QAD-1430
ISN 0066            CALL  TITLE   ( 3, MRC, NORC, CDET(1), ID(1))               QAD-1440
ISN 0067            IP = 10                                                     QAD-1450
ISN 0068        224 XSRC = 0.0                                                  QAD-1460
ISN 0069            YSRC = 0.0                                                  QAD-1470
ISN 0070            ZSRC = 0.0                                                  QAD-1480
ISN 0071            CALL  LENGTH                                                QAD-1490
                   1   ( SREG(1), XRELL, SSO, XSRC, YSRC, ZSRC, XRCVR, YRCVR, ZRCVR,  QAD-1500
                   2      IERR1 )                                               QAD-1510
ISN 0072        230 DO  500  N=1,NSO                                            QAD-1520
ISN 0073            GO TO  ( 231, 232, 231 ), MS OPT                            QAD-1530
ISN 0074        231 SINS = SIN( PHISO(N) )                                      QAD-1540
ISN 0075            COSS = COS( PHISO(N) )                                      QAD-1550
ISN 0076            GO TO  250                                                  QAD-1560
ISN 0077        232 YSRC = PHISO(N)                                             QAD-1570
ISN 0078        250 DO  500  L=1,LSO                                            QAD-1580
ISN 0079            GO TO  ( 251, 252, 253 ), MS OPT                            QAD-1590
ISN 0080        251 XSRC = RSO(L) * COSS                                        QAD-1600
ISN 0081            YSRC = RSO(L) * SINS                                        QAD-1610
ISN 0082            GO TO  260                                                  QAD-1620
ISN 0083        252 XSRC = RSO(L)                                               QAD-1630
ISN 0084            GO TO  260                                                  QAD-1640
ISN 0085        253 SPHX = COSS * RSO(L)                                        QAD-1650
ISN 0086            SPHY = SINS * RSO(L)                                        QAD-1660
ISN 0087        260 FLN = FL(L) * FN(N)                                         QAD-1670
ISN 0088        270 DO  500  M=1,MSO                                            QAD-1680
ISN 0089            GO TO  ( 271, 271, 272 ), MS OPT                            QAD-1690
```

```
ISN 0090      271  ZSRC = ZSO(M)                                                    QAD-1700
ISN 0091           GO TO  280                                                      QAD-1710
ISN 0092      272  XSRC = SPHX * SIN( ZSO(M) )                                     QAD-1720
ISN 0093           YSRC = SPHY * SIN( ZSO(M) )                                     QAD-1730
ISN 0094           ZSRC = RSO(L) * COS( ZSO(M) )                                   QAD-1740
ISN 0095      280  FLMN = FLN * FM(M)                                              QAD-1750
ISN 0096      190  NGPC = NGPC + 1                                                 QAD-1760
ISN 0097           IF  ( N GPC - N GPF )  400,293,291                              QAD-1770
ISN 0098      291  IF  ( N GPC - N GPL )  292,295,400                              QAD-1780
ISN 0099      292  IF  ( N GPC - N GPJ )  400,294,400                              QAD-1790
ISN 0100      293  N GPJ = N GPF + N GPI                                           QAD-1800
ISN 0101           WRITE (6     ,6)ID                                              QAD-1810
ISN 0102           GO TO  296                                                      QAD-1820
ISN 0103      294  N GPJ = N GPJ + N GPI                                           QAD-1830
ISN 0104      295  WRITE (6     ,5)                                                QAD-1840
ISN 0105      296  CALL SLITE (1)                                                  QAD-1850
ISN 0106           IP = 10                                                         QAD-1860
ISN 0107           GO TO  ( 297, 298, 299 ), MRC                                   QAD-1870
ISN 0108      297  WRITE (6     ,7)NO RC, RRC, ZRC, PHIRC, L, M, N                 QAD-1880
ISN 0109           GO TO  400                                                      QAD-1890
ISN 0110      298  WRITE (6     ,8)NO RC, XRC, YRC, ZRC, L, M, N                   QAD-1900
ISN 0111           GO TO  400                                                      QAD-1910
ISN 0112      299  WRITE (6     ,9)NO RC, XRC, YRC, ZRC, L, M, N                   QAD-1920
ISN 0113      400  CALL  LENGTH                                                    QAD-1930
                  1    ( SREG(1), XRELL, SSO, XSRC, YSRC, ZSRC, XRCVR, YRCVR, ZRCVR,  QAD-1940
                  2       IERR1)                                                   QAD-1950
ISN 0114           IF  ( IERR1 )  420,420,800                                      QAD-1960
ISN 0115      420  CALL  KERNEL                                                    QAD-1970
                  1    ( SREG(1), XRELL, ANEUT(1,1), AW A, AGAM(1), UAGAM(1), NERR)  QAD-1980
ISN 0116           IF  ( N ERR )  430,430,421                                      QAD-1990
ISN 0117      421  IF  ( N ERR - 5 )  422,422,430                                  QAD-2000
ISN 0118      422  NS IND(N ERR,1) = L                                             QAD-2010
```

```
ISN 0119          NS IND(N ERR,2) = M                                    QAD-2020
ISN 0120          NS IND(N ERR,3) = N                                    QAD-2030
ISN 0121     430  IF  ( X NL MAX - X REL L )  431,431,433                QAD-2040
ISN 0122     431  X NL MAX = X REL L                                     QAD-2050
ISN 0123          IS MAX(1) = L                                          QAD-2060
ISN 0124          IS MAX(2) = M                                          QAD-2070
ISN 0125          IS MAX(3) = N                                          QAD-2080
ISN 0126     433  IF  ( X NL MIN - X REL L )  436,434,434                QAD-2090
ISN 0127     434  X NL MIN = X REL L                                     QAD-2100
ISN 0128          IS MIN(1) = L                                          QAD-2110
ISN 0129          IS MIN(2) = M                                          QAD-2120
ISN 0130          IS MIN(3) = N                                          QAD-2130
ISN 0131     436  A = FLMN / ( 12.5663706 * SSO ** 2 )                   QAD-2140
ISN 0132          AN = 2.46* A
ISN 0133          DO  440  J=1,NRGY                                      QAD-2160
ISN 0134          D  GAM(J) = D  GAM(J) + A  GAM(J) * A * GAMEN(J)       QAD-2170
ISN 0135          UD GAM(J) = UD GAM(J) + UA GAM(J) * A * GAMEN(J)       QAD-2180
ISN 0136      440 CONTINUE                                               QAD-2190
ISN 0137          IF  ( I NEUT )  500,500,460                            QAD-2200
ISN 0138      460 DO  480  J=1,I NEUT                                    QAD-2210
ISN 0139          J NEUT = N SET(20)                                     QAD-2220
ISN 0140          DO  480  I=1,J NEUT                                    QAD-2230
ISN 0141          F NEUT(I,J) = F NEUT(I,J) + AN * A NEUT(I,J)           QAD-2240
ISN 0142      480 CONTINUE                                               QAD-2250
ISN 0143          AW NEUT = AWNEUT + AN * AW A                           QAD-2260
ISN 0144      500 CONTINUE                                               QAD-2270
ISN 0145      501 CONTINUE                                               QAD-2280
ISN 0146          DO  510  K=1,3                                         QAD-2290
ISN 0147          TOTL GI(K) = 0.0                                       QAD-2300
ISN 0148          TOTL GI(K+3) = 0.0                                     QAD-2310
ISN 0149          DO  510  L=1,5                                         QAD-2320
ISN 0150          TOTL NI(K,L) = 0.0                                     QAD-2330
ISN 0151      510 CONTINUE                                               QAD-2340
ISN 0152          DO  520  K=1,6                                         QAD-2350
ISN 0153          TOTAL G(K) = 0.0                                       QAD-2360
ISN 0154      520 CONTINUE                                               QAD-2370
ISN 0155          DO  530  K=1,5                                         QAD-2380
ISN 0156          DO  530  L=1,5                                         QAD-2390
ISN 0157          TOTAL N(K,L) = 0.0                                     QAD-2400
```

```
ISN 0158        530 CONTINUE                                                    QAD-2410
ISN 0159            EG AV(1) = 0.0                                              QAD-2420
ISN 0160            EG AV(2) = 0.0                                              QAD-2430
ISN 0161            BU FLX T = 0.0                                              QAD-2440
ISN 0162            DO  540  J=1,NRGY                                           QAD-2450
ISN 0163            GRP G (J,1) = UD GAM(J)                                     QAD-2460
ISN 0164            TOTAL G (1) = TOTAL G(1) + GRP G(J,1)                       QAD-2470
ISN 0165            GRPG(J,3)=UD GAM(J)*CONV(J)                                 QAD-2480
ISN 0166            TOTAL G(3) = TOTAL G(3) + GRP G(J,3)                        QAD-2490
ISN 0167            GRP G(J,4) = D GAM(J) * CONV(J)                             QAD-2500
ISN 0168            TOTAL G(4) = TOTAL G(4) + GRP G(J,4)                        QAD-2510
ISN 0169            GRP G(J,2) = GRP G(J,4) / GRP G(J,3)                        QAD-2520
ISN 0170            GRP G(J,5) = UD GAM(J) * FE ABS G(J)                        QAD-2530
ISN 0171            TOTAL G(5) = TOTAL G(5) + GRP G(J,5)                        QAD-2540
ISN 0172            GRP G(J,6) = D GAM(J) * FE ABS G(J)                         QAD-2550
ISN 0173            TOTAL G(6) = TOTAL G(6) + GRP G(J,6)                        QAD-2560
ISN 0174            EG AV(1) = EG AV(1) +EG(J) * GRP G(J,1)                     QAD-2570
ISN 0175            EG AV(2) = EG AV(2) +EG(J) * D GAM(J)                       QAD-2580
ISN 0176            BU FLX T = BU FLX T + D GAM(J)                              QAD-2590
ISN 0177        540 CONTINUE                                                    QAD-2600
ISN 0178            EG AV(1) = EG AV(1) / TOTAL G(1)                            QAD-2610
ISN 0179            EG AV(2) = EG AV(2) / BU FLX T                              QAD-2620
ISN 0180            TOTAL G(2) = TOTAL G(4) / TOTAL G(3)                        QAD-2630
ISN 0181            IF  ( NG INT )  600,600,550                                 QAD-2640
ISN 0182        550 DO  560  K=1,NG INT                                         QAD-2650
ISN 0183            DO  560  J=1,NRGY                                           QAD-2660
ISN 0184            GRP GI(J,2*K-1) = UD GAM(J) * WT G(J,K)                     QAD-2670
ISN 0185            GRP GI(J,2*K) = D GAM(J) * WT G(J,K)                        QAD-2680
ISN 0186            TOTL GI(2*K-1) = TOTL GI(2*K-1) + GRP GI(J,2*K-1)           QAD-2690
ISN 0187            TOTL GI(2*K) = TOTL GI(2*K) + GRP GI(J,2*K)                 QAD-2700
ISN 0188        560 CONTINUE                                                    QAD-2710
ISN 0189        600 IF  ( I NEUT )  750,750,610                                 QAD-2720
ISN 0190        610 DO  650  K=1,I NEUT                                         QAD-2730
ISN 0191            J NEUT = NSET(20)                                           QAD-2740
ISN 0192            DO  620  J=1,J NEUT                                         QAD-2750
ISN 0193            GRP N(J,1,K) = F NEUT(J,K)                                  QAD-2760
ISN 0194            GRP N(J,2,K) = F NEUT(J,K) * HIST N(J)                      QAD-2770
ISN 0195            TOTAL N(1,K) = TOTAL N(1,K) + GRP N(J,2,K)                  QAD-2780
```

```
ISN 0196          GRP N(J,3,K) = GRP N(J,2,K) * EN(J)                                QAD-2790
ISN 0197          TOTAL N(2,K) = TOTAL N(2,K) + GRP N(J,3,K)                         QAD-2800
ISN 0198          GRP N(J,4,K) = GRP N(J,2,K) * CONV N(J)                            QAD-2810
ISN 0199          TOTAL N(3,K) = TOTAL N(3,K) + GRP N(J,4,K)                         QAD-2820
ISN 0200          GRP N(J,5,K) = GRP N(J,2,K) * FE ABS N(J)                          QAD-2830
ISN 0201          TOTAL N(4,K) = TOTAL N(4,K) + GRP N(J,5,K)                         QAD-2840
ISN 0202      620 CONTINUE                                                           QAD-2850
ISN 0203          EN AV(K) = TOTAL N(2,K) / TOTAL N(1,K)                             QAD-2860
ISN 0204          IF  ( NN INT )  650,650,630                                        QAD-2870
ISN 0205      630 DO  640  I=1,NN INT                                                QAD-2880
ISN 0206          DO  640  J=1,J NEUT                                                QAD-2890
ISN 0207          GRP NI(J,I,K) = GRP N(J,2,K) * WT N(J,I)                           QAD-2900
ISN 0208          TOTL NI(I,K) = TOTL NI(I,K) + GRP NI(J,I,K)                        QAD-2910
ISN 0209      640 CONTINUE                                                           QAD-2920
ISN 0210      650 CONTINUE                                                           QAD-2930
ISN 0211          TOTAL N(5,1) = AW NEUT                                             QAD-2940
ISN 0212      750 CALL  PRINT                                                        QAD-2950
                 1   ( ID(1), NBMID(1,1), UNITG(1), UNITN(1), UNITGI(1), UNITNI(1),  QAD-2960
                 2UNITND(1),            WIDTHT(1,1), WIDTHG(1,1), WIDTHN(1,1), NGINT, QAD-2970
                 3 NNINT,                        NORC, MRC, CDET(1), EG(1), EN(1), E QAD-2980
                 4GAV(1), ENAV(1),                          TOTALG(1), TOTALN(1,1),  QAD-2990
                 5GRPG(1,1),  GRPN(1,1,1),                                TOTLGI(1 QAD-3000
                 6), TOTLNI(1,1), GRPGI(1,1), GRPNI(1,1,1),                         QAD-3010
                 7        NRGY, NSET(20), NERR, NSIND(1,1), NSET(12),               QAD-3020
                 8            XNLMAX, XNLMIN, ISMAX(1), ISMIN(1))                   QAD-3030
ISN 0213          GO TO 1300
ISN 0214      800 GO TO  ( 820,830,840 ), MRC                                        QAD-3050
ISN 0215      820 WRITE (6      ,7)NO RC, RRC, ZRC, PHIRC, L, M, N                   QAD-3060
ISN 0216          GO TO  860                                                         QAD-3070
ISN 0217      830 WRITE (6      ,8)NO RC, XRC, YRC, ZRC, L, M, N                     QAD-3080
ISN 0218          GO TO  860                                                         QAD-3090
ISN 0219      840 WRITE (6      ,9)NO RC, XRC, YRC, ZRC, L, M, N                     QAD-3100
ISN 0220      860 WRITE (6      ,10)IERR1                                            QAD-3110
ISN 0221          NERR = NERR + 1                                                    QAD-3120
ISN 0222          IF (NERR-2) 1300,1300,880
ISN 0223      880 READ  (5      ,1)XX1, XX2, XX3, IXX                                QAD-3140
ISN 0224          IF(IXX)890,880,880
ISN 0225      890 GO TO 100
ISN 0226          END                                                                QAD-3160
```

```
ISN 0002          SUBROUTINE INPUT
            CINPT-P  SUBROUTINE USED WITH QAD-PR                                    0020
                 1 ( N1PT, UNITG, UNITGI, WIDTHG, NGINT, NNINT, FEABSG, WTG)
ISN 0003          DIMENSION NAM(20)
ISN 0004          DIMENSION  UNIT G(18),            UNIT GI(27),                  QAD-0210
                 2   FE ABS G(30),  WIDTHG(30,3),WT G(30,3), NSIND(5,3)           QAD-0230
ISN 0005          COMMON /QADNM/  NBMID(18,3), NASET(3), RMXSEC(3), BREAK(3,2),
                 1 XNMMC(5,30,3), CONVN(10)  , HISTN(10), EN(10)  , FEABSN(10),
                 2 WIDTHN(10,2) , WTN(10,3),       UNITN(12), UNITNI(27),UNITND(3),
                 3 WIDTHT(2,2)
ISN 0006          COMMON /QADATA/
                 1 NSET  (30)   , RSO  (101)   , PHISO (101)  , ZSO  (101)   ,
                 5 HYDRAT(30)   , XSECN (30)   , XSECG (20,30), BILDO (30)   ,
                 6 BILD1 (30)   , BILD2 (30)   , BILD3 (30)   , GAMEN (30)   ,
                 7 CONV  (30)   , COMP  (20,40), EG    (30)   , MATZ  (20)   ,
                 8 FL    (101)  , FN    (101)  , FM    (101)  , XISO  (2,3)  ,
                 9 ASO  , RRC   , ZRC  , PHIRC  , ALF1  , ALF2   ,ALF3   ,
                 X ALF4 , NBLD  , ID(18)
ISN 0007          COMMON IDDR (10000)
ISN 0008          COMMON /STDATA/
                 1 NAME  (100)  , ENRG  (20)   , XSECO (20,100),XSECEA(20)   ,
                 2 C   (4,6,9)  , EMINBB(8)    , NAMB(12)     , XSECNT(100)  ,DCONST
ISN 0009          EQUIVALENCE  (LSO, NSET(1)), (MSO, NSET(2)), (NSO, NSET(3)),     0330
                 1   (MAT, NSET(4)), (NCOMP, NSET(5)),
                 2   (NRGY, NSET(7)), (NBOUND,NSET(8)), (NS OPT, NSET(9)),         0350
                 3   (ISRC, NSET(11)), (I NEUT, NSET(12))                          0360
ISN 0010          EQUIVALENCE  ( NSET(20), J NEUT ), ( NSET(20), KK NEUT )         0370
ISN 0011         1 FORMAT  ( 1H-, 5X, 21HGEOMETRY CHECK SOURCE  /  10X,            0580
                 1   55HONE POINT AT THE COORDINATE ORIGIN WITH UNIT INTENSITY  )  0590
ISN 0012         2 FORMAT  ( 1H-, 1P9E12.4 / ( 1X, 9E12.4 ) )                     0600
ISN 0013         4 FORMAT(33H1     NO SOURCE.  RUN TERMINATED.)                    0620
ISN 0014         5 FORMAT(18A4)
ISN 0015         6 FORMAT(8(I5,I4))                                               0640
ISN 0016         7 FORMAT(8E9.4)                                                  0650
ISN 0017         8 FORMAT(I5,I4,7E9.4)                                            0660
```

```
ISN 0018          9 FORMAT(6H1     18A4/13H0     CONTROL16I6/ 25X, 14I6 )
ISN 0019         10 FORMAT  ( 1H1 )
ISN 0020         12 FORMAT(15I6)
ISN 0021         14 FORMAT(2I6,1P7E12.4)
ISN 0022         15 FORMAT (4H1XNM,5X,A4, 16H BUILDUP IS USED//
                   X        81H0    GRP         EPS/E       DELTA/K       A1/B0        A2/B
                   11        A3/B2        A4/B3//)
ISN 0023         16 FORMAT (I7,5X1P9E12.4,-1PF7.2)
ISN 0024         17 FORMAT (10HL  GRP/MAT  9(4X,A4,4X))
ISN 0025         18 FORMAT (10H1 COMP/MAT  9(4X,A4,4X))
ISN 0026         20 FORMAT( 29H0  ALBERT-WELTON COEFFICIENTS/5X,1P4E12.4)
ISN 0027        185 FORMAT  (12X, 1P9E12.4)
ISN 0028        100 FORMAT(12H0     SOURCE1P8E12.4)
ISN 0029        101 FORMAT(12H0          R1P8E12.4/(12X8E12.4))
ISN 0030        102 FORMAT(12H0          Z1P8E12.4/(12X8E12.4))
ISN 0031        103 FORMAT(12H0        PHI1P8E12.4/(12X8E12.4))
ISN 0032        104 FORMAT(12H0       F(L)1P8E12.4/(12X8E12.4))
ISN 0033        105 FORMAT(12H0       F(M)1P8E12.4/(12X8E12.4))
ISN 0034        106 FORMAT(12H0       F(N)1P8E12.4/(12X8E12.4))
ISN 0035        107 FORMAT  (5E12.8)
ISN 0036        109 FORMAT  (1H0,27X,29HNEUTRON REMOVAL CROSS-SECTION)
ISN 0037        110 FORMAT  (1H0,27X,29HGAMMA ATTENUATION COEFFICIENT)
ISN 0038        111 FORMAT  (1H1,25X,30HNEUTRON CURVE FIT COEFFICIENTS)
ISN 0039        112 FORMAT  (1H0,10X,32HREFERENCE MATERIAL CROSS-SECTION,1PE12.4)
ISN 0040        113 FORMAT  (1H0,10X,11HBREAK POINT, 2F12.4 )
ISN 0041        114 FORMAT  (7X,1P5E12.4)
ISN 0042        115 FORMAT  ( 1H1, 10X, 18A4 / 10X, 8HI NEUT -, I3, 10X, 8HJ NEUT -,
                  1   I3, 10X, 11HNA SET(L) -, I3 )
ISN 0043        116 FORMAT  (1H-, 10X, 36HNEUTRON INTEGRAL WEIGHTING FACTORS -/
                  1    (10X, 1P5E16.8))
ISN 0044        117 FORMAT  (1H-, 10X, 29HNEUTRON INTEGRATING FACTORS -/
                  1   (10X, 1P5E16.8))
ISN 0045       118  FORMAT  ( 1H0, 27X, 25HMATERIAL HYDROGEN DENSITY )
ISN 0046        900 FORMAT( 12Z10 )
              C
              C
ISN 0047            DO 984 K=1,30
ISN 0048        984 NSET(K) = 0
```

```
ISN 0049          READ  (5     ,5    ,END = 666)  ID
ISN 0050          READ  (5     ,6)(NSET(I),I=1,16)                                  1020
ISN 0051          NG INT = N SET(16)                                                1030
ISN 0052          IF(NSET(12).GT.0)  NSET(12)=3
ISN 0054          INEUT=NSET(12)
ISN 0055          NSET(19)= 1-NSET(12)
ISN 0056          NNINT=3
ISN 0057          NSET(22)=3
ISN 0058          JNEUT=10
ISN 0059          N SET(21) = NG INT
ISN 0060          N SET(18) = N SET(9) - 9                                          1120
ISN 0061          IF  ( N SET(9) - 9 )  5997,5997,5996                              1140
ISN 0062     5996 N SET(9) = N SET(9) - 10                                          1150
ISN 0063     5997 IF  ( N SET(19) )  5999,5999,5998                                 1160
ISN 0064     5998 N SET(22) = 0                                                     1170
ISN 0065     5999 WRITE (6     ,9)ID, N SET                                         1180
            C                                                                       1190
ISN 0066          IF ( NSET(6) ) 701, 701, 700                                      1200
ISN 0067      700 CALL JOMIN(IDDR)
ISN 0068          IF( IDDR(1) - 5000 ) 701, 701, 51
ISN 0069       51 WRITE(6,  52)
ISN 0070       52 FORMAT(1H1,57H THE NO. OF DOUBLE WORD CELLS REQUIRED BY THE GEOMET
                 1RY (=I6, 48H) EXCEEDS THE DIMENSION OF IDDR IN PROGRAM INPUT)
ISN 0071          CALL EXIT
ISN 0072      701 ISRC=NSET(11)
ISN 0073          IF(ISRC)19,19,2020                                                1210
ISN 0074       19 IF(ASO)191,191,30
ISN 0075      191 WRITE (6     ,4)                                                  1230
ISN 0076          CALL EXIT                                                         1240
ISN 0077     2020 LU = LSO + 1                                                      1250
ISN 0078          MU=MSO+1
ISN 0079          NU=NSO+1                                                          1270
ISN 0080       24 READ  (5     ,7)ASO, (( XISO(I,J), I=1,2), J=1,3 )                1280
ISN 0081          WRITE (6     ,100)ASO, (( XISO(I,J), I=1,2 ), J=1,3 )             1290
ISN 0082       25 READ  (5     ,7)(RSO(L),L=1,LU)                                   1300
ISN 0083          WRITE (6     ,101)(RSO(L),L=1,LU)                                 1310
ISN 0084          READ  (5     ,7)(ZSO(M),M=1,MU)                                   1320
ISN 0085          WRITE (6     ,102)(ZSO(M),M=1,MU)                                 1330
ISN 0086          READ  (5     ,7)(PHISO(N),N=1,NU)                                 1340
ISN 0087          WRITE (6     ,103)(PHISO(N),N=1,NU)                               1350
                                                                                    1360
```

```
ISN 0088          GO TO(30,22),ISRC                                          1370
ISN 0089       22 READ  (5      ,7)(FL(L),L=1,LU)                            1380
ISN 0090          WRITE (6      ,104)(FL(L),L=1,LU)                          1390
ISN 0091          READ  (5      ,7)(FM(M),M=1,MU)                            1400
ISN 0092          WRITE (6      ,105)(FM(M),M=1,MU)                          1410
ISN 0093          READ  (5      ,7)(FN(N),N=1,NU)                            1420
ISN 0094          WRITE (6      ,106)(FN(N),N=1,NU)                          1430
ISN 0095       30 N99 = 5                                                    1440
ISN 0096          IF  ( N SET(18) )  222,222,221                             1450
ISN 0097      221 READ  (5      ,7)( GAMEN(I), I=1,NRGY )                    1460
ISN 0098          WRITE (6      ,9876)( GAMEN(I), I=1,NRGY )                 1470
ISN 0099     9876 FORMAT  ( 1H0, 10X, 21HGAMMA SOURCE SPECTRUM / ( 3X, 1P7E16.4 ) )  1480
            C                                                                1490
ISN 0100      222 IF  ( NSET(5) )  301,301,40                               1500
ISN 0101      301 NSET(N99) = IABS( NSET(N99) )                             1510
ISN 0102          GO TO 1000
ISN 0103       40 CONTINUE                                                  1710
ISN 0104          READ (5,6) NBLD,(MATZ(I),I=1,MAT)
ISN 0105          DO 44 I=1,MAT
ISN 0106          L = MATZ(I)
ISN 0107          NAM(I) = NAME(L)
ISN 0108          HYDRAT(I) = 0.0
ISN 0109          IF (L.EQ.1) HYDRAT(I)=1.0
ISN 0111       44 XSECN(I) = XSECNT(L)
ISN 0112          DO 45 J=1,NCOMP                                            1720
ISN 0113       45 READ  (5      ,7)(COMP(I,J),I=1,MAT)                       1730
ISN 0114          DO  69  K=1,MAT,9                                          1740
ISN 0115          IU=  MINO(K+8,MAT)                                         1750
ISN 0116          WRITE (6,18) (NAM(I),I=K,IU)
ISN 0117          DO 69 J=1,NCOMP                                            1770
ISN 0118       69 WRITE (6      ,16)J,(COMP(I,J),I=K,IU)                     1780
ISN 0119          N99 = 4                                                    1790
ISN 0120          IF  ( NSET(4) )  301,301,43                                1800
ISN 0121       43 CONTINUE                                                  1810
ISN 0122          READ  (5      ,7)( EG(K), K=1,NRGY )                       2400
ISN 0123          CALL XSECQD
```

```
ISN 0124          DO 70 K=1,MAT,9                                                1840
ISN 0125          IU=MINO(K+8,MAT)                                               1850
ISN 0126          WRITE (6,17) (NAM(I),I=K,IU)
ISN 0127          WRITE (6     ,109)                                             1870
ISN 0128          WRITE (6     ,185)(XSECN(I), I=K,IU)                           1880
ISN 0129          WRITE (6     ,118)                                             1890
ISN 0130          WRITE (6     ,185)( HYDRAT(I), I=K,IU )                        1900
ISN 0131          WRITE (6     ,110)                                             1910
ISN 0132          DO 70 J=1,NRGY                                                 1920
ISN 0133       70 WRITE (6,16) J,(XSECG(I,J),I=K,IU),EG(J)
ISN 0134          IF  ( N SET(18) )  6551,6551,6552                              1940
ISN 0135     6551 READ  (5     ,7)(GAMEN(I),I=1,NRGY)                            1950
ISN 0136     6552 READ  (5     ,7)(CONV(I),I=1,NRGY)                             1960
ISN 0137          WRITE (6     ,15)   NAMB(NBLD)
ISN 0138          DO 65 I=1,NRGY                                                 1990
ISN 0139       65 WRITE (6     ,16)I,GAMEN(I),CONV(I),BILDO(I),BILD1(I),BILD2(I),BIL   2000
                 1D3(I)                                                          2010
ISN 0140          ALF1= 0.2655E-7
            C     ALF1= 0.2655E-7  (RAD/SEC)/(NEUT/SEC) = .653E-7 RAD/FISSION
            C         = 2.35E-4(RAD/HR)/(FISS/SEC) ... 2.35E-4(REP/HR)/(FISS/SEC)
            C                                          AN OLD WESTINGHOUSE NUMBER
            C                                          USED WITH 0.29, 0.83, 0.58
ISN 0141          ALF2 = .29
ISN 0142          ALF3 = .83
ISN 0143          ALF4 = .58
ISN 0144          WRITE (6     ,20) ALF1,  ALF2,  ALF3,  ALF4
            C                                                                    2040
ISN 0145          IF(INEUT.LE.0)  GO TO 7778
ISN 0147          KER PL = 0
ISN 0148          KKNEUT=JNEUT
ISN 0149          DO  540  L=1,I NEUT                                            2070
ISN 0150          WRITE (6     ,115)( NBMID(K,L), K=1,18 ), I NEUT, J NEUT,    NA SE   2110
                 1T(L)                                                           2120
ISN 0151          WRITE (6     ,112)RM XSEC(L)                                   2130
ISN 0152          WRITE (6     ,113)BREAK(L,1), BREAK(L,2)                       2140
ISN 0153          NN SET = J NEUT * NA SET(L)                                    2150
ISN 0154          DO  530  J=1,NN SET                                            2160
ISN 0155          WRITE (6     ,114)( XN MM C(I,J,L), I=1,5 )                    2180
```

```
ISN 0156        530 CONTINUE                                                    2190
ISN 0157        540 CONTINUE                                                    2200
ISN 0158            WRITE (6      ,116)( CONV N(K), K=1,KK NEUT )               2220
ISN 0159            WRITE (6      ,117)(HIST N(K), K=1,KK NEUT)                 2240
ISN 0160       9000 FORMAT  ( 1H+, 20X, 18A4 / ( 21X, 18A4 ) )                  2250
ISN 0161      9001  FORMAT  ( 1H-, 3HEG- )                                      2260
ISN 0162       9002 FORMAT  ( 1H-, 3HEN- )                                      2270
ISN 0163       9003 FORMAT  ( 1H-, 9HFE ABS G- )                                2280
ISN 0164       9004 FORMAT  ( 1H-, 9HFE ABS N- )                                2290
ISN 0165       9005 FORMAT  ( 1H-, 8HWIDTH T- )                                 2300
ISN 0166       9006 FORMAT  ( 1H-, 8HWIDTH G- )                                 2310
ISN 0167       9007 FORMAT  ( 1H-, 8HWIDTH N- )                                 2320
ISN 0168       9008 FORMAT  ( 1H-, 7HUNIT G- )                                  2330
ISN 0169       9009 FORMAT  ( 1H-, 7HUNIT N- )                                  2340
ISN 0170       9010 FORMAT  ( 1H-, 4HWT G, 5X, 4HSET , I2 )                     2350
ISN 0171       9011 FORMAT  ( 1H-, 4HWT N, 5X, 4HSET , I2 )                     2360
ISN 0172       9012 FORMAT  ( 1H-, 8HUNIT GI- )                                 2370
ISN 0173       9013 FORMAT  ( 1H-, 8HUNIT NI- )                                 2380
ISN 0174       7778 WRITE (6      ,10)
ISN 0175            WRITE (6      ,9001)
ISN 0176            WRITE (6      ,2)( EG(K), K=1,NRGY )                        2410
ISN 0177            READ  (5      ,7)( FE ABS G(K), K=1,NRGY )                  2420
ISN 0178            WRITE (6      ,9003)                                        2430
ISN 0179            WRITE (6      ,2)( FE ABS G(K), K=1,NRGY )                  2440
ISN 0180            WRITE (6      ,9002)                                        2450
ISN 0181            WRITE (6      ,2)( EN(K), K=1,KK NEUT )                     2470
ISN 0182            WRITE (6      ,9004)                                        2480
ISN 0183            WRITE (6      ,2)( FE ABS N(K), K=1,KK NEUT )               2500
ISN 0184            READ  (5      ,5) ( WIDTH T(1,J), J=1,2 )                   2510
ISN 0185            WRITE (6      ,9005)
ISN 0186            WRITE (6      ,9000)(( WIDTH T(I,J), J=1,2 ), I=1,2 )       2530
ISN 0187            READ  (5      ,5)(( WIDTH G(J,I), I=1,3 ), J=1,NRGY )       2540
ISN 0188            WRITE (6      ,9006)                                        2550
ISN 0189            WRITE (6      ,9000)(( WIDTH G(J,I), I=1,3 ), J=1,NRGY )    2560
ISN 0190            WRITE (6      ,9007)                                        2570
ISN 0191            WRITE (6      ,9000)(( WIDTH N(J,I), I=1,2 ), J=1, KKNEUT)  2590
ISN 0192            READ(5  ,5) ( UNITG(3*I-2), UNITG(3*I-1), UNITG(3*I),       2600
                  1 UNITG(3*I+7), UNITG(3*I+8), UNITG(3*I+9), I=1,3 )            2610
                                                                                2620
```

```
ISN 0193          WRITE (6     ,9008)                                          2630
ISN 0194          WRITE (6     ,9000)( UNIT G(I), I=1,18 )                     2640
ISN 0195          WRITE (6     ,9009)                                          2670
ISN 0196          WRITE (6     ,9000)( UNIT N(I), I=1,12), ( UNIT ND(I),      I=1,3  2680
                 1)                                                            2690
ISN 0197          IF  ( NG INT )  630,630,610                                  2700
ISN 0198     610  DO  620  I=1,NG INT                                          2710
ISN 0199          READ  (5     ,7)( WT G(J,I), J=1,NRGY )                      2720
ISN 0200          WRITE (6     ,9010)I                                         2730
ISN 0201          WRITE (6     ,2)( WT G(J,I), J=1,NRGY )                      2740
ISN 0202      620 CONTINUE                                                     2750
ISN 0203          READ (5    ,5)(UNIT GI(3*I-2),UNITGI(3*I-1),UNITGI(3*I),
                 1UNITGI(3*I+7),UNITGI(3*I+8)  ,UNITGI(3*I+9),UNITGI(3*I+16),
                 2UNITGI(3*I+17),UNITGI(3*I+18), I=1,3)
ISN 0204          WRITE (6     ,9012)                                          2790
ISN 0205          WRITE (6     ,9000)( UNIT GI(I), I=1,27 )                    2800
ISN 0206     630  IF  ( INEUT)    1000,1000,640
ISN 0207     640  DO  650  I=1,NN INT                                          2820
ISN 0208          WRITE (6     ,9011)I                                         2830
ISN 0209          WRITE (6     ,2)( WT N(J,I), J=1,KK NEUT )                   2850
ISN 0210     650  CONTINUE                                                    2860
ISN 0211          WRITE (6     ,9013)                                          2900
ISN 0212          WRITE (6     ,9000)( UNIT NI(I), I=1,27 )                    2910
ISN 0213    1000  RETURN
ISN 0214      666 CALL EXIT
ISN 0215          RETURN
ISN 0216           END                                                         2930
```

```
ISN 0002          SUBROUTINE  LENGTH                                          LEN-0020
            CLEN-N   SUBROUTINE USED WITH QAD-NM AND QAD-PR                   LEN-0010
                 1   ( SMAT, XRELL, SSO, XSO, YSO, ZSO, XRC, YRC, ZRC, IERR )  LEN-0030
ISN 0003          DIMENSION R(6),SMAT(20)                                     LEN-0040
ISN 0004          COMMON /QADATA/
                 1 NSET  (30)   , RSO  (101)   , PHISO (101)  , ZZZ  (101)   ,
                 5 HYDRAT(30)   , XSECN (30)   , XSECG (20,30), BILDO (30)   ,
                 6 BILD1 (30)   , BILD2 (30)   , BILD3 (30)   , GAMEN (30)   ,
                 7 CONV  (30)   , COMP  (20,40), EG    (30)   , MATZ  (20)   ,
                 8 FL    (101)  , FN    (101)  , FM    (101)  , XISO  (2,3)  ,
                 9 ASO  , RRC   , ZRV  , PHIRC  , ALF1  , ALF2   ,ALF3   ,
                 X ALF4 , NBLD  , ID(18)
ISN 0005          REAL*8  XONE, YONE, ZONE, ETA, ETAUSD, BLZON, XTWO, YTWO, ZTWO
ISN 0006          COMMON/GEOMC/XTWO,YTWO,ZTWO,XONE,YONE,ZONE,ETA,ETAUSD,BLZON,
                 1             MARK,NMED,NREG
ISN 0007          EQUIVALENCE  (LSO, NSET(1)), (MSO, NSET(2)), (NSO, NSET(3)),  LEN-0310
                 1   (MAT, NSET(4)), (NCOMP, NSET(5)),
                 2   (NRGY, NSET(7)), (NBOUND,NSET(8)), (NS OPT, NSET(9)),     LEN-0330
                 3                      ( ISRC, NSET(11) ), ( I NEUT, NSET(12) )  LEN-0340
ISN 0008        5 FORMAT(67H0   ZONE      BOUNDARY    DISTANCE        X          Y  LEN-0530
                 1          Z)                                                 LEN-0540
ISN 0009        6 FORMAT(I7,17X,1P6E12.4)
ISN 0010          X REL L = 0.0                                               LEN-0560
ISN 0011        9 CALL SLITET(1,K000FX)
ISN 0012           GO TO(101,102),K000FX                                      LEN-0600
ISN 0013      101 CALL SLITE (1)                                              LEN-0610
ISN 0014          WRITE (6     ,5)                                            LEN-0620
ISN 0015      102 DO 11 M=1,MAT                                               LEN-0630
ISN 0016       11 SMAT(M)=0.0                                                 LEN-0640
ISN 0017          CALL LOOKZ ( DBLE(XSO), DBLE(YSO), DBLE(ZSO) )
ISN 0018          MARK=1
ISN 0019          ALPHA=XRC-XSO                                               LEN-0680
ISN 0020          BETA=YRC-YSO                                                LEN-0690
ISN 0021          GAMMA=ZRC-ZSO                                               LEN-0700
ISN 0022          SRC=SQRT(ALPHA**2+BETA**2+GAMMA**2)                         LEN-0710
ISN 0023          ALPHA =ALPHA/SRC                                            LEN-0720
ISN 0024          GAMMA=GAMMA/SRC                                             LEN-0730
ISN 0025          BETA=BETA/SRC                                               LEN-0740
```

```
ISN 0026          SSO=SRC
ISN 0027          ETA=SRC
ISN 0028          MEDTMP=NMED
ISN 0029          XONE=XSO
ISN 0030          YONE=YSO
ISN 0031          ZONE=ZSO
ISN 0032       10 XTWO=XRC
ISN 0033          YTWO=YRC
ISN 0034          ZTWO=ZRC
ISN 0035      100 CALL GEOM
ISN 0036          IF(MEDTMP-1000)111,110,111
ISN 0037      110 ETAUSD=DSQRT( (XTWO-XONE)**2+(YTWO-YONE)**2+(ZTWO-ZONE)**2 )
ISN 0038      111 CALL SLITET(1,KOOOFX)
ISN 0039          GO TO(103,104), KOOOFX
ISN 0040      103 CALL SLITE(1)
ISN 0041          WRITE(6     ,6) MEDTMP , ETAUSD , XONE , YONE , ZONE
ISN 0042      104 ETA=ETA-ETAUSD
ISN 0043          IF(MEDTMP-1000)105,995,105
ISN 0044      105 DO 994 M=1,MAT
ISN 0045          SMAT(M)=SMAT(M)+SNGL(ETAUSD)*COMP(M,MEDTMP)
ISN 0046          XRELL = XRELL + SNGL(ETAUSD)*COMP(M,MEDTMP)*XSECN(M)
ISN 0047      994 CONTINUE
ISN 0048      995 CONTINUE
ISN 0049          MEDTMP=NMED
ISN 0050          IF(MARK)108,107,106
ISN 0051      106 IERR=0
ISN 0052          GO TO 300
ISN 0053      107 XONE=XTWO
ISN 0054          YONE=YTWO
ISN 0055          ZONE=ZTWO
ISN 0056          GO TO 10
ISN 0057      108 IF(MARK+1)109,106,106
ISN 0058      109 XONE=XTWO
ISN 0059          YONE=YTWO
ISN 0060          ZONE=ZTWO
```

```
ISN 0061            XTWO=ALPHA
ISN 0062            YTWO=BETA
ISN 0063            ZTWO=GAMMA
ISN 0064            GO TO 100
ISN 0065        300 CALL SLITET(1,KOOOFX)
ISN 0066             GO TO(1000,1000),KOOOFX
ISN 0067       1000 RETURN
ISN 0068            END
```

```
ISN 0002          SUBROUTINE  KERNEL                                          KER-0020
            CKER-P   SUBROUTINE USED WITH QAD-PR                              KER-0010
                 1   ( S MAT, X RELL, A NEUT, AW A, A GAM, UA GAM, N ERR )    KER-0030
ISN 0003          DIMENSION   SMAT(20), ANEUT(16,5), AGAM(30), UAGAM(30)     KER-0040
ISN 0004          COMMON /QADNM/  NBMID(18,3), NASET(3), RMXSEC(3), BREAK(3,2),
                 1 XNMMC(5,30,3), CONVN(10)  , HISTN(10), EN(10)  , FEABSN(10),
                 2 WIDTHN(10,2) , WTN(10,3),       UNITN(12), UNITNI(27),UNITND(3),
                 3 WIDTHT(2,2)
ISN 0005          COMMON /QADATA/
                 1 NSET  (30)   , RSO  (101)   , PHISO (101)  , ZSO  (101)   ,
                 5 HYDRAT(30)   , XSECN (30)   , XSECG (20,30), BILDO (30)   ,
                 6 BILD1 (30)   , BILD2 (30)   , BILD3 (30)   , GAMEN (30)   ,
                 7 CONV  (30)   , COMP  (20,40), EG    (30)   , MATZ  (20)   ,
                 8 FL    (101)  , FN    (101)  , FM    (101)  , XISO  (2,3)  ,
                 9 ASO  , RRC   , ZRC  , PHIRC  , ALF1  , ALF2   ,ALF3   ,
                 X ALF4 , NBLD  , ID(18)
ISN 0006          EQUIVALENCE  (LSO, NSET(1)), (MSO, NSET(2)), (NSO, NSET(3)),  KER-0300
                 1   (MAT, NSET(4)), (NCOMP, NSET(5)),
                 2   (NRGY, NSET(7)), (NBOUND,NSET(8)), (NS OPT, NSET(9)),     KER-0320
                 3   (ISRC, NSET(11)), (I NEUT, NSET(12))                      KER-0330
ISN 0007          J NEUT = NSET(20)                                            KER-0510
ISN 0008      100 IF  ( I NEUT )  300,300,200                                  KER-0520
ISN 0009      200 DO  250  L=1,I NEUT                                          KER-0530
ISN 0010          L NEUT = 0                                                   KER-0540
ISN 0011          TAU = X RELL / RM XSEC(L)                                    KER-0550
ISN 0012          IF  ( TAU - BREAK(L,1) )  240,240,210                        KER-0560
ISN 0013      210 IF  ( TAU - BREAK(L,2) )  220,220,230                        KER-0570
ISN 0014      220 L NEUT = 1                                                   KER-0580
ISN 0015          GO TO  240                                                   KER-0590
ISN 0016      230 L NEUT =2                                                    KER-0600
ISN 0017      240 DO  250  I=1,J NEUT                                          KER-0610
ISN 0018          N = NA SET(L) * ( I - 1 ) + 1 + L NEUT                       KER-0620
ISN 0019          A NEUT(I,L) = EXP((((  XN MM C(1,N,L)   * TAU + XN MM C(2,N,L) ) *  KER-0630
                 1TAU                  + XN MM C(3,N,L) ) * TAU + XN MM C(4,N,L) ) *  KER-0640
                 2TAU                  + XN MM C(5,N,L) )                       KER-0650
```

```
ISN 0020        250 CONTINUE                                                    KER-0670
ISN 0021            S HYD = 0.0                                                 KER-0680
ISN 0022            DO  260  M=1,MAT                                            KER-0690
ISN 0023            S HYD = S HYD + HYDRAT(M) * S MAT(M)                        KER-0700
ISN 0024        260 CONTINUE                                                    KER-0710
ISN 0025            S HYD = S HYD / 0.1119                                      KER-0720
ISN 0026            IF  ( S HYD )  270,270,280                                  KER-0730
ISN 0027        270 AW A = ALF1 * EXP( - X RELL )                               KER-0740
ISN 0028            N ERR = N ERR + 1                                           KER-0750
ISN 0029            GO TO  300                                                  KER-0760
ISN 0030        280 AW A = ALF1 * S HYD ** ALF2 *                               KER-0770
                   1   EXP( 0.0669 * S HYD - XRELL - ALF3 * S HYD ** ALF4 )     KER-0780
ISN 0031        300 DO  400  J=1,NRGY                                           KER-0790
ISN 0032            AG = 0.0                                                    KER-0800
ISN 0033            DO  350  I=1,MAT                                            KER-0810
ISN 0034        320 AG=AG+SMAT(I)*XSECG(I,J)                                    KER-0820
ISN 0035        350 CONTINUE                                                    KER-0830
ISN 0036        360 U GAM = EXP( -AG )                                          KER-0840
ISN 0037        370 GAM = (( BILD3(J) * AG + BILD2(J) ) * AG + BILD1(J) ) * AG  KER-0850
                   1   + BILDG(J)                                               KER-0860
ISN 0038        380 A GAM(J) = UGAM * GAM                                       KER-0870
ISN 0039        390 UA GAM(J) = U GAM                                           KER-0880
ISN 0040        400 CONTINUE                                                    KER-0890
ISN 0041        1000 RETURN                                                     KER-0900
ISN 0042            END                                                         KER-0910
```

```
ISN 0002          SUBROUTINE  SOURCE                                          CSC 0020
            CCSC     SUBROUTINE USED WITH QAD-NM AND QAD-PR                   CSC 0010
ISN 0003          DIMENSION  FT(3), ISO(3)                                    CSC 0040
ISN 0004          COMMON /QADATA/
                 1 NSET  (30)   , CSO  (101,3)  ,
                 5 HYDRAT(30)   , XSECN (30)   , XSECG (20,30), BILDO (30)   ,
                 6 BILD1 (30)   , BILD2 (30)   , BILD3 (30)   , GAMEN (30)   ,
                 7 CONV  (30)   , COMP  (20,40), EG    (30)   , MATZ  (20)   ,
                 8 F     (101,3),                               XISO  (2,3)  ,
                 9 ASO  , RRC   , ZRC  , PHIRC  , ALF1  , ALF2   ,ALF3   ,
                 X ALF4 , NBLD  , ID(18)
ISN 0005          EQUIVALENCE  (LSO, NSET(1)), (MSO, NSET(2)), (NSO, NSET(3)),  CSC 0120
                 1   (MAT, NSET(4)), (NCOMP, NSET(5)),
                 2   (NRGY, NSET(7)), (NBOUND,NSET(8)), (NS OPT, NSET(9)),     CSC 0140
                 3   (ISRC, NSET(11)), (I NEUT, NSET(12))                      CSC 0150
ISN 0006          FNS(Q000FL) =SIN( XI * ( Q000FL- ETA ))                      CSC 0190
ISN 0007          FNC(Q001FL) =COS( XI * ( Q001FL- ETA ))                      CSC 0200
ISN 0008     100  ISO(1) = LSO                                                 CSC 0210
ISN 0009          ISO(2) = NSO                                                 CSC 0220
ISN 0010          ISO(3) = MSO                                                 CSC 0230
ISN 0011          IF  ( ISRC - 1 )  150,150,450                                CSC 0240
            C     INTENSITIES COMPUTED FROM XI-S                               CSC 0250
ISN 0012     150  DO  400  N=1,3                                               CSC 0260
ISN 0013          FT(N) = 0.0                                                  CSC 0270
ISN 0014          KOUNT = 3 * NS OPT + N                                       CSC 0280
ISN 0015          MAX = ISO(N)                                                 CSC 0290
ISN 0016          IF  ( XISO(1,N) )  300,200,300                               CSC 0300
            C         XI=0                                                     CSC 0310
            C              R   PHI   Z     X    Y    Z    RHO  PHI  THETA      CSC 0320
ISN 0017     200  GO TO  ( 230, 210, 210,  210, 210, 210,  250, 210, 270 ), KOUNT  CSC 0330
            C       PHI,  Z,    X,  Y,  Z,    PHI                            CSC 0340
ISN 0018     210  DO  220  M=1,MAX                                             CSC 0350
ISN 0019          F(M,N) = CSO(M+1,N) - CSO(M,N)                               CSC 0360
ISN 0020          CSO(M,N) = 0.5 * ( CSO(M+1,N) + CSO(M,N) )                   CSC 0370
ISN 0021          FT(N) = FT(N) + F(M,N)                                       CSC 0380
ISN 0022     220  CONTINUE                                                     CSC 0390
ISN 0023          GO TO  400                                                   CSC 0400
            C       R                                                          CSC 0410
```

```
ISN 0024        230 DO  240  M=1,MAX                                          CSC 0420
ISN 0025            F(M,N) = ( CSO(M+1,N) ** 2.0 - CSO(M,N) ** 2.0 ) / 2.0    CSC 0430
ISN 0026            CSO(M,N) = 0.5 * ( CSO(M+1,N) + CSO(M,N) )                CSC 0440
ISN 0027            FT(N) = FT(N) + F(M,N)                                    CSC 0450
ISN 0028        240 CONTINUE                                                  CSC 0460
ISN 0029            GO TO  400                                                CSC 0470
              C       RHO                                                     CSC 0480
ISN 0030        250 DO  260  M=1,MAX                                          CSC 0490
ISN 0031            F(M,N) = ( CSO(M+1,N) ** 3.0 - CSO(M,N) ** 3.0 ) / 3.0    CSC 0500
ISN 0032            CSO(M,N) = 0.5 * ( CSO(M+1,N) + CSO(M,N) )                CSC 0510
ISN 0033            FT(N) = FT(N) + F(M,N)                                    CSC 0520
ISN 0034        260 CONTINUE                                                  CSC 0530
ISN 0035            GO TO  400                                                CSC 0540
              C       THETA                                                   CSC 0550
ISN 0036        270 DO  280  M=1,MAX                                          CSC 0560
ISN 0037            F(M,N) = COS( CSO(M,N) ) - COS( CSO(M+1,N) )              CSC 0570
ISN 0038            CSO(M,N) = 0.5 * ( CSO(M+1,N) + CSO(M,N) )                CSC 0580
ISN 0039            FT(N) = FT(N) + F(M,N)                                    CSC 0590
ISN 0040        280 CONTINUE                                                  CSC 0600
ISN 0041            GO TO  400                                                CSC 0610
              C         XI NOT ZERO                                           CSC 0620
ISN 0042        300 XI  = XISO(1,N)                                           CSC 0630
ISN 0043            ETA = XISO(2,N)                                           CSC 0640
              C                R   PHI   Z     X    Y    Z    RHO  PHI  THETA CSC 0650
ISN 0044            GO TO  ( 330, 310, 310,  310, 310, 310,  350, 310, 370 ), KOUNT CSC 0660
              C       PHI,  Z,    X,  Y,  Z,    PHI                         CSC 0670
ISN 0045        310 DO  320  M=1,MAX                                          CSC 0680
ISN 0046            F(M,N) = ( FNS( CSO(M+1,N) ) - FNS( CSO(M,N) ) )          CSC 0690
                   1 / XI                                                     CSC 0700
ISN 0047            CSO(M,N) = 0.5 * ( CSO(M+1,N) + CSO(M,N) )                CSC 0710
ISN 0048            FT(N) = FT(N) + F(M,N)                                    CSC 0720
ISN 0049        320 CONTINUE                                                  CSC 0730
ISN 0050            GO TO  400                                                CSC 0740
              C       R                                                       CSC 0750
```

```
ISN 0051        330 DO  340  M=1,MAX                                        CSC 0760
ISN 0052             F(M,N)=(FNC(CSO(M+1,N))-FNC(CSO(M,N))+
                   1XI*(CSO(M+1,N)*FNS(CSO(M+1,N))
                   2-CSO(M,N)*FNS(CSO(M,N))))/XI**2
ISN 0053             CSO(M,N) = 0.5 * ( CSO(M+1,N) + CSO(M,N) )              CSC 0790
ISN 0054             FT(N) =FT(N) + F(M,N)                                   CSC 0800
ISN 0055        340 CONTINUE                                                 CSC 0810
ISN 0056             GO TO  400                                              CSC 0820
            C          RHO                                                   CSC 0830
ISN 0057        350 DO  360  M=1,MAX                                         CSC 0840
ISN 0058             F(M,N) =                                                CSC 0850
                   1   ((( XI *CSO(M+1,N) ) ** 2.0 - 2.0 ) * FNS( CSO(M+1,N) )  CSC 0860
                   2  -(( XI *CSO(M,N) )   ** 2.0 - 2.0 ) * FNS( CSO(M,N) )  CSC 0870
                   3 + 2.0 * XI * ( CSO(M+1,N) * FNC( CSO(M+1,N) )           CSC 0880
                   4- CSO(M,N) * FNC( CSO(M,N) ))) / XI ** 3.0               CSC 0890
ISN 0059             CSO(M,N) = 0.5 * ( CSO(M+1,1) + CSO(M,N) )              CSC 0900
ISN 0060             FT(N) = FT(N) + F(M,N)                                  CSC 0910
ISN 0061        360 CONTINUE                                                 CSC 0920
ISN 0062             GOTO400                                                 CSC 0930
            C          THETA                                                 CSC 0940
ISN 0063        370 IF  ( XI - 1.0 )  380,390,380                            CSC 0950
            C          XI NOT ONE                                            CSC 0960
ISN 0064        380 DO  385  M=1,MAX                                         CSC 0970
ISN 0065             F(M,N) = ( SIN( CSO(M+1,N) ) * FNS( CSO(M+1,N) )        CSC 0980
                   1 - SIN( CSO(M,N) ) * FNS( CSO(M,N) )                   - CSC 0990
                   2 XI * (COS( CSO(M+1,N) ) * FNC( CSO(M+1,N) )         - C CSC 1000
                   3OS( CSO(M,N) ) * FNC( CSO(M,N) ) ))                / ( X CSC 1010
                   4I ** 2.0 - 1.0 )                                         CSC 1020
ISN 0066             CSO(M,N) = 0.5 * ( CSO(M+1,N) + CSO(M,N) )              CSC 1030
ISN 0067             FT(N) = FT(N) + F(M,N)                                  CSC 1040
ISN 0068        385 CONTINUE                                                 CSC 1050
ISN 0069             GO TO  400                                              CSC 1060
            C          XI = 1                                                CSC 1070
ISN 0070        390 DO  395  M=1,MAX                                         CSC 1080
ISN 0071             F(M,N) = 0.5 * ( SIN( CSO(M+1,N) ) * FNS( CSO(M+1,N) )  CSC 1090
                   1 - SIN( CSO(M,N) ) * FNS( CSO(M,N) )                   - CSC 1100
                   2 ( CSO(M+1,N) - CSO(M,N) ) * SIN( ETA ) )                CSC 1110
```

```
ISN 0072          CSO(M,N) = 0.5 * ( CSO(M+1,N) + CSO(M,N) )                CSC 1120
ISN 0073          FT(N) = FT(N) + F(M,N)                                    CSC 1130
ISN 0074      395 CONTINUE                                                  CSC 1140
ISN 0075      400 CONTINUE                                                  CSC 1150
ISN 0076          GO TO  800                                                CSC 1160
            C     INTENSITIES COMPUTED FROM INPUT F-S...                    CSC 1170
ISN 0077      450 DO  600  N=1,3                                            CSC 1180
ISN 0078          FT(N) = 0.0                                               CSC 1190
ISN 0079          KOUNT = 3 * NS OPT + N                                    CSC 1200
ISN 0080          MAX = ISO(N)                                              CSC 1210
            C                R   PHI   Z     X    Y    Z    RHO  PHI  THETA CSC 1220
ISN 0081          GO TO  ( 530, 510, 510, 510, 510, 510, 550, 510, 570 ), KOUNT CSC 1230
            C       PHI    X  Y  Z    PHI                                   CSC 1240
ISN 0082      510 DO  520  M=1,MAX                                          CSC 1250
ISN 0083          F(M,N) =                                                  CSC 1260
                 1   ( F(M+1,N) + F(M,N) ) * ( CSO(M+1,N) - CSO(M,N) )      CSC 1270
ISN 0084          CSO(M,N) = 0.5 * ( CSO(M+1,N) + CSO(M,N) )                CSC 1280
ISN 0085          FT(N) = FT(N) + F(M,N)                                    CSC 1290
ISN 0086      520 CONTINUE                                                  CSC 1300
ISN 0087          GO TO  600                                                CSC 1310
            C       R                                                       CSC 1320
ISN 0088      530 DO  540  M=1,MAX                                          CSC 1330
ISN 0089          F(M,N) =                                                  CSC 1340
                 1   2.0 * ( F(M+1,N) * CSO(M+1,N) ** 2 - F(M,N) * CSO(M,N) ** 2 ) CSC 1350
                 2   - ( F(M+1,N) * CSO(M,N) - F(M,N) * CSO(M+1,N) )        CSC 1360
                 3   * ( CSO(M+1,N) + CSO(M,N) )                            CSC 1370
ISN 0090          CSO(M,N) = 0.5 * ( CSO(M+1,N) + CSO(M,N) )                CSC 1380
ISN 0091          FT(N) = FT(N) + F(M,N)                                    CSC 1390
ISN 0092      540 CONTINUE                                                  CSC 1400
ISN 0093          GO TO  600                                                CSC 1410
            C       RHO                                                     CSC 1420
ISN 0094      550 DO  560  M=1,MAX                                          CSC 1430
ISN 0095          F(M,N) =                                                  CSC 1440
                 1   3.0 * ( F(M+1,N) * CSO(M+1,N) ** 3 - F(M,N) * CSO(M,N) ** 3 ) CSC 1450
                 2   - ( F(M+1,N) * CSO(M,N) - F(M,N) * CSO(M+1,N) )        CSC 1460
                 3   * ( CSO(M+1,N) ** 2 + CSO(M+1,N) * CSO(M,N) + CSO(M,N) ** 2 ) CSC 1470
ISN 0096          CSO(M,N) = 0.5 * ( CSO(M+1,N) + CSO(M,N) )                CSC 1480
ISN 0097          FT(N) = FT(N) + F(M,N)                                    CSC 1490
ISN 0098      560 CONTINUE                                                  CSC 1500
ISN 0099          GO TO  600                                                CSC 1510
```

```
            C        THETA                                                    CSC 1520
ISN 0100     570  DO  580  M=1,MAX                                            CSC 1530
ISN 0101          F(M,N) =                                                   CSC 1540
                 1   ( ( SIN( CSO(M+1,N) ) - SIN( CSO(M,N) )                 CSC 1550
                 2 - ( CSO(M+1,N) * COS( CSO(M+1,N) )                        CSC 1560
                 3- CSO(M,N) * COS( CSO(M,N) ) ) )                         * CSC 1570
                 4 ( F(M+1,N) - F(M,N) )                                   - CSC 1580
                 5 ( COS( CSO(M+1,N) ) - COS( CSO(M,N) ) )               * ( CSC 1590
                 6 CSO(M+1,N) * F(M,N) - CSO(M,N) * F(M+1,N) ) )         / ( CSC 1600
                 7 CSO(M+1,N) - CSO(M,N) )                                   CSC 1610
ISN 0102          CSO(M,N) = 0.5 * ( CSO(M+1,N) + CSO(M,N) )                 CSC 1620
ISN 0103          FT(N) = FT(N) + F(M,N)                                     CSC 1630
ISN 0104     580 CONTINUE                                                    CSC 1640
ISN 0105     600 CONTINUE                                                    CSC 1650
            C     SOURCE NORMALIZATION                                       CSC 1660
ISN 0106     800 ASO = ABS( ASO / ( FT(1) * FT(2) * FT(3) ) )                CSC 1670
ISN 0107          MAX = ISO(3)                                               CSC 1680
ISN 0108          DO  820  M=1,MAX                                           CSC 1690
ISN 0109          F(M,3) = F(M,3) * ASO                                      CSC 1700
ISN 0110     820 CONTINUE                                                    CSC 1710
ISN 0111          DO  840  N=1,3                                             CSC 1720
ISN 0112          M = ISO(N) + 1                                             CSC 1730
ISN 0113          CSO(M,N) = 0.0                                             CSC 1740
ISN 0114          F(M,N) = 0.0                                               CSC 1750
ISN 0115     840 CONTINUE                                                    CSC 1760
            C     SOURCE COORDINATES AND INTENSITIES PRINT                   CSC 1770
ISN 0116      1   FORMAT  ( 1H0, 12X, 16H    R COORDINATE )                 CSC 1780
ISN 0117      2   FORMAT  ( 1H0, 12X, 16H  PHI COORDINATE )                 CSC 1790
ISN 0118      3   FORMAT  ( 1H0, 12X, 16H    Z COORDINATE )                 CSC 1800
ISN 0119      4   FORMAT  ( 1H0, 12X, 16H    X COORDINATE )                 CSC 1810
ISN 0120      5   FORMAT  ( 1H0, 12X, 16H    Y COORDINATE )                 CSC 1820
ISN 0121      7   FORMAT  ( 1H0, 12X, 16H  RHO COORDINATE )                 CSC 1830
ISN 0122      9   FORMAT  ( 1H0, 12X, 16HTHETA COORDINATE )                 CSC 1840
ISN 0123      11  FORMAT  ( 1H1, 34X, 15HCOORDINATE TYPE, I2, 10X,          CSC 1850
                 1  23HSOURCE INTENSITY OPTION, I2 )                         CSC 1860
```

```
ISN 0124      12    FORMAT  ( 1H , 4X, 4( 4X, 10HCOORDINATE, 4X, 9HINTENSITY ) // )    CSC 1870
ISN 0125      13    FORMAT  ( 1H , I5, 1P8E14.4 )                                      CSC 1880
ISN 0126      900   WRITE (6      ,11)NS OPT, ISRC                                     CSC 1890
ISN 0127            DO  940  N=1,3                                                     CSC 1900
ISN 0128            KOUNT = 3 * NS OPT + N                                             CSC 1910
ISN 0129            GO TO  ( 901, 902, 903,  904, 905, 903,  907, 902, 909 ), KOUNT    CSC 1920
ISN 0130       901  WRITE (6      ,1)                                                  CSC 1930
ISN 0131            GO TO  910                                                         CSC 1940
ISN 0132       902  WRITE (6      ,2)                                                  CSC 1950
ISN 0133            GO TO  910                                                         CSC 1960
ISN 0134       903  WRITE (6      ,3)                                                  CSC 1970
ISN 0135            GO TO  910                                                         CSC 1980
ISN 0136       904  WRITE (6      ,4)                                                  CSC 1990
ISN 0137            GO TO  910                                                         CSC 2000
ISN 0138       905  WRITE (6      ,5)                                                  CSC 2010
ISN 0139            GO TO  910                                                         CSC 2020
ISN 0140       907  WRITE (6      ,7)                                                  CSC 2030
ISN 0141            GO TO  910                                                         CSC 2040
ISN 0142       909  WRITE (6      ,9)                                                  CSC 2050
ISN 0143       910  WRITE (6      ,12)                                                 CSC 2060
ISN 0144            MAX = ISO(N)                                                       CSC 2070
ISN 0145            DO  920  M=1,MAX,4                                                 CSC 2080
ISN 0146            MAX P = M + 3                                                      CSC 2090
ISN 0147            WRITE (6      ,13)M, ( CSO(I,N), F(I,N), I=M,MAX P )               CSC 2100
ISN 0148       920  CONTINUE                                                           CSC 2110
ISN 0149       940  CONTINUE                                                           CSC 2120
ISN 0150      1000  RETURN                                                             CSC 2130
ISN 0151            END                                                                CSC 2140
```

```
ISN 0002          SUBROUTINE XSECQD
ISN 0003          COMMON /STDATA/
                 1 NAME  (100)  , ENRG  (20)    , XSECO (20,100),XSECEA(20)    ,
                 2 C   (4,6,9)  , EMINBB(8)     , NAMB(12)      , XSECNT(100)  ,DCONST
ISN 0004          COMMON /QADATA/
                 1 NSET  (30)   , RSO  (101)    , PHISO (101)   , ZSO  (101)   ,
                 5 HYDRAT(30)   , XSECN (30)    , XSECG (20,30), BILDO (30)    ,
                 6 BILD1 (30)   , BILD2 (30)    , BILD3 (30)    , GAMEN (30)   ,
                 7 CONV  (30)   , COMP  (20,40), EBAR  (30)    , MATZ  (20)   ,
                 8 FL    (101)  , FN    (101)   , FM    (101)   , XISO  (2,3)  ,
                 9 ASO  , RRC   , ZRC  , PHIRC  , ALF1  , ALF2   ,ALF3   ,
                 X ALF4 , NBLD  , ID(18)
ISN 0005          DIMENSION BILD(30,4), XSEC(19,30),SLOPE(19,30)
ISN 0006          EQUIVALENCE (NSET(7),NRGY),(NSET(4),MAT)
            C     CALCULATE QAD BUILDUP COEFFICIENTS.
            C     NBLD=1, 2, 3, 4, = H2O, AL, FE, OR PB DOSE BUILDUP
            C     NBLD=5, 6, 7, 8, = H2O, AL, FE, OR PB ENERGY ABSORPTION BUILDUP
ISN 0007          DO 12 I=1,NRGY
ISN 0008          E= EBAR(I)
ISN 0009          IF(NBLD.GE.8)  GO TO 5
ISN 0011          LIM=5
ISN 0012          IF(NBLD.EQ.4) LIM=6
ISN 0014          IF(E.LT.EMINBB(NBLD)) E=EMINBB(NBLD)
ISN 0016          IF(NBLD.NE.4) E=1.0/E
ISN 0018          NB=NBLD
ISN 0019          GO TO 9
ISN 0020        5 IF(E-4.0) 6,6,7
ISN 0021        6 LIM=4
ISN 0022          IF(E.LT. 0.5) E=0.5
ISN 0024          E=1.0/E
ISN 0025          NB=8
ISN 0026          GO TO 9
ISN 0027        7 LIM=3
ISN 0028          NB=9
ISN 0029        9 DO 10  II=1,4
ISN 0030          BILD(I,II)=0.
ISN 0031          DO 10  J=1,LIM
```

```
ISN 0032          10 BILD(I,II) = BILD(I,II)+ C(II,J,NB)    *E**(J-1)
ISN 0033             BILD0(I)= BILD(I,1)
ISN 0034             BILD1(I)= BILD(I,2)
ISN 0035             BILD2(I)= BILD(I,3)
ISN 0036          12 BILD3(I)= BILD(I,4)
                C    SELECT CROSS-SECTIONS FROM LARGE TABLE
ISN 0037             DO 15  M=1,MAT
ISN 0038             L= MATZ(M)
ISN 0039             DO 15 NE=1,19
ISN 0040             XSEC(NE,M)= XSECO(NE,L)
ISN 0041          15 SLOPE(NE,M)= (XSECO(NE+1,L)-XSECO(NE,L))/(ENRG(NE+1)-ENRG(NE))
                C    CALCULATE CROSS-SECTIONS AT ENERGY EBAR(I)
ISN 0042             DO 25 I=1,NRGY
ISN 0043             DO 20 NE=1,19
ISN 0044             IF(EBAR(I)-ENRG(NE+1)) 22,22,20
ISN 0045          20 CONTINUE
ISN 0046             NE=19
ISN 0047          22 DO 25 M=1,MAT
ISN 0048             XSECG(M,I) = XSEC(NE,M)+ SLOPE(NE,M)*(EBAR(I)-ENRG(NE))
ISN 0049          25 CONTINUE
ISN 0050             RETURN
ISN 0051             END
```

```
ISN 0002          SUBROUTINE GEOM                                          GEOM   1
ISN 0003          IMPLICIT REAL*8(A-H,O-Z)                                 GEOM   2
            C     MARK=1  FOR COMPLETED PATH                               GEOM   3
            C         =0  FOR NORMAL BOUNDARY CROSSING                     GEOM   4
            C         =-1  FOR ESCAPED FROM SYSTEM                         GEOM   5
            C         =-2  ENTERED INTERIOR VOID                           GEOM   6
ISN 0004          COMMON/GEOMC/XTWO,YTWO,ZTWO,XONE,YONE,ZONE,ETA,ETAUSD,BLZON,  GEOM   7
                 2    MARK,NMED,NREG                                       GEOM   8
ISN 0005          COMMON/GEOM4/X1,Y1,Z1,X2,Y2,Z2,DIST,DISTQ,               GEOM   9
                 2    NCUE,NCR                                             GEOM  10
ISN 0006          COMMON/GEOMA/ID,NSTAT                                    GEOM  11
ISN 0007          COMMON/JOMIN1/BIG                                        GEOM  12
ISN 0008          COMMON/GEOM9/NZ,NBL,NXBL,NYBL,NZBL                       GEOM  13
ISN 0009          DATA I/2/                                                GEOM  14
ISN 0010          IF(NMED.EQ.1000) GO TO 175                               GEOM  15
ISN 0012      100 IF(MARK)145,150,105                                      GEOM  16
ISN 0013      105 ID=1                                                     GEOM  17
ISN 0014          CALL JOM14                                               GEOM  18
            C     JOM14 IS UNPCK                                           GEOM  19
ISN 0015      110 X1=XONE                                                  GEOM  20
ISN 0016          Y1=YONE                                                  GEOM  21
ISN 0017          Z1=ZONE                                                  GEOM  22
ISN 0018          X2=XTWO                                                  GEOM  23
ISN 0019          Y2=YTWO                                                  GEOM  24
ISN 0020          Z2=ZTWO                                                  GEOM  25
ISN 0021          DISTD=0.0                                                GEOM  26
ISN 0022      115 DIST=1.0-DISTD                                           GEOM  27
ISN 0023          CALL JOM4                                                GEOM  28
            C     JOM4 IS BOUND          JOM5 IS INTER                     GEOM  29
ISN 0024          CALL JOM5                                                GEOM  30
ISN 0025          IF (NCR.LE.0) GO TO 135                                  GEOM  31
ISN 0027          XTWO=X2                                                  GEOM  32
ISN 0028          YTWO=Y2                                                  GEOM  33
ISN 0029          ZTWO=Z2                                                  GEOM  34
ISN 0030          ETAUSD=ETA*(DIST*DISTQ+DISTD)                            GEOM  35
ISN 0031          IF(NMED.EQ.0) GO TO 125                                  GEOM  36
ISN 0033          IF(NMED.EQ.1000) GO TO 130                               GEOM  37
ISN 0035          MARK=0                                                   GEOM  38
```

```
ISN 0036          GO TO 165                                          GEOM  39
ISN 0037      125 MARK=-1                                            GEOM  40
ISN 0038          GO TO 165                                          GEOM  41
ISN 0039      130 MARK=-2                                            GEOM  42
ISN 0040          GO TO 165                                          GEOM  43
ISN 0041      135 IF(NCUE.LE.0) GO TO 140                            GEOM  44
ISN 0043          DISTD=DIST+DISTD                                   GEOM  45
ISN 0044          X1=X2                                              GEOM  46
ISN 0045          Y1=Y2                                              GEOM  47
ISN 0046          Z1=Z2                                              GEOM  48
ISN 0047          X2=XTWO                                            GEOM  49
ISN 0048          Y2=YTWO                                            GEOM  50
ISN 0049          Z2=ZTWO                                            GEOM  51
ISN 0050          CALL JOM10                                         GEOM  52
            C     JOM10 IS NEWB                                      GEOM  53
ISN 0051          ID=1                                               GEOM  54
ISN 0052          IF(NZ)155,155,115                                  GEOM  55
ISN 0053      140 MARK=1                                             GEOM  56
ISN 0054          ETAUSD=ETA                                         GEOM  57
ISN 0055          GO TO 160                                          GEOM  58
ISN 0056      145 IF(MARK.GE.-1) GO TO 105                           GEOM  59
ISN 0058      150 ID=2                                               GEOM  60
ISN 0059          GO TO 110                                          GEOM  61
ISN 0060      155 MARK=-1                                            GEOM  62
ISN 0061          XTWO=X1                                            GEOM  63
ISN 0062          YTWO=Y1                                            GEOM  64
ISN 0063          ZTWO=Z1                                            GEOM  65
ISN 0064          ETAUSD=ETA*DISTD                                   GEOM  66
ISN 0065          NMED=0                                             GEOM  67
ISN 0066          BLZON=0.                                           GEOM  68
ISN 0067          GO TO 170                                          GEOM  69
ISN 0068      160 IF(NSTAT.NE.0) CALL JOM6(XTWO,YTWO,ZTWO,3,NREG)    GEOM  70
            C     JOM6 IS FINDR          JOM15 IS PCK                GEOM  71
ISN 0070      165 CALL JOM15                                         GEOM  72
ISN 0071      170 IF(I-1)180,180,185                                 GEOM  73
ISN 0072      175 S=DABS(XTWO)+DABS(YTWO)+DABS(ZTWO)                 GEOM  74
ISN 0073          S=BIG/S                                            GEOM  75
```

```
ISN 0074          XTWO=XONE+S*XTWO                                GEOM  76
ISN 0075          YTWO=YONE+S*YTWO                                GEOM  77
ISN 0076          ZTWO=ZONE+S*ZTWO                                GEOM  78
ISN 0077          I=1                                             GEOM  79
ISN 0078          GO TO 100                                       GEOM  80
ISN 0079      180 I=2                                             GEOM  81
ISN 0080          ETAUSD=0.0                                      GEOM  82
ISN 0081      185 RETURN                                          GEOM  83
ISN 0082             END                                          GEOM  84
```

```
ISN 0002          SUBROUTINE JOMIN(ADDR)                                          JOMI   1
ISN 0003          REAL*8 BIG,XPBD,XMBD,YPBD,YMBD,ZPBD,ZMBD,X                      JOMI   2
ISN 0004          DIMENSION N(1),X(1),ADDR(1)                                     JOMI   3
ISN 0005          COMMON X                                                        JOMI   4
ISN 0006          COMMON/GEOMA/ID,NSTAT                                           JOMI   5
ISN 0007          COMMON/JOMIN1/BIG                                               JOMI   6
ISN 0008          COMMON/JOMIN2/XPBD,XMBD,YPBD,YMBD,ZPBD,ZMBD,NOX,NOY,NOZ,NOXY,NOXYZ JOMI   7
ISN 0009          COMMON/JOMIN3/NXZBD,NYZBD,NZZBD,NOXB,NOYB,NOZB,NNX,             JOMI   8
                 1NNY,NNZ,NM,NME1,NME2,NME3,NS,NB,NMS,NME1S,NME2S,NME3S,          JOMI   9
                 2NSS,NBS                                                        JOMI  10
ISN 0010          COMMON/GEOMT/TITLE(2)                                           JOMI  11
ISN 0011          COMMON/GEOMH/HMALE,FEMALE,HIT,COMMA,ZONE,BLOCK,MEDIA,SURFAC,    JOMI  12
                 $SECTOR,COFS(13),REGION,SIR,HMADAM,HMISS,HMARR,SINGLE            JOMI  13
ISN 0012          EQUIVALENCE(X,N)                                                JOMI  14
ISN 0013          DATA SPACE,AM/4H    ,4HM   /                                    JOMI  15
ISN 0014          READ (5,8000) NSTAT,SEX,EX,STATUS,US                            JOMI  16
ISN 0015     8000 FORMAT(I5,5X,A4,A2,1X,A4,A3)                                    JOMI  17
ISN 0016          WRITE (6,8005) NSTAT,SEX,EX,STATUS,US                           JOMI  18
ISN 0017     8005 FORMAT(1H1,I5,5X,A4,A2,1X,A4,A3)                                JOMI  19
ISN 0018          NSTAT=NSTAT-2                                                   JOMI  20
ISN 0019          IF(SEX.NE.HMALE) GO TO 100                                      JOMI  21
ISN 0021          TITLE(1)=SIR                                                    JOMI  22
ISN 0022          TITLE(2)=SPACE                                                  JOMI  23
ISN 0023          GO TO 115                                                       JOMI  24
ISN 0024      100 IF(SEX.NE.FEMALE) GO TO 110                                     JOMI  25
ISN 0026          IF(STATUS.NE.HMARR) GO TO 105                                   JOMI  26
ISN 0028          TITLE(1)=HMADAM                                                 JOMI  27
ISN 0029          TITLE(2)=AM                                                     JOMI  28
ISN 0030          GO TO 115                                                       JOMI  29
ISN 0031      105 IF(STATUS.NE.SINGLE) GO TO 110                                  JOMI  30
ISN 0033          TITLE(1)=HMISS                                                  JOMI  31
ISN 0034          TITLE(2)=SPACE                                                  JOMI  32
ISN 0035          GO TO 115                                                       JOMI  33
ISN 0036      110 TITLE(1)=HIT                                                    JOMI  34
ISN 0037          TITLE(2)=SPACE                                                  JOMI  35
ISN 0038          CALL JOM13(5)                                                   JOMI  36
ISN 0039      115 NADD1=(LOC(ADDR)-LOC(X))/4+1                                    JOMI  37
ISN 0040          NADD=(NADD1+1)/2+1                                              JOMI  38
```

```
ISN 0041          NXZBD=NADD                                          JOMI  39
ISN 0042          NOX=JOM16(NADD)                                     JOMI  40
ISN 0043           NADD=NADD                                          JOMI  41
ISN 0044          XPBD=X(NADD-1)                                      JOMI  42
ISN 0045          XMBD=X(NXZBD)                                       JOMI  43
ISN 0046          NYZBD=NADD                                          JOMI  44
ISN 0047          NOY=JOM16(NADD)                                     JOMI  45
ISN 0048          NADD=NADD                                           JOMI  46
ISN 0049          YPBD=X(NADD-1)                                      JOMI  47
ISN 0050          YMBD=X(NYZBD)                                       JOMI  48
ISN 0051          NZZBD=NADD                                          JOMI  49
ISN 0052          NOZ=JOM16(NADD)                                     JOMI  50
ISN 0053          NADD=NADD                                           JOMI  51
ISN 0054          ZPBD=X(NADD-1)                                      JOMI  52
ISN 0055          ZMBD=X(NZZBD)                                       JOMI  53
ISN 0056          NOXY=NOX*NOY                                        JOMI  54
ISN 0057          NOXYZ=NOXY*NOZ                                      JOMI  55
ISN 0058          NNX=2*NADD-2                                        JOMI  56
ISN 0059          NNY=NNX+NOXYZ                                       JOMI  57
ISN 0060          NNZ=NNY+NOXYZ                                       JOMI  58
ISN 0061          NM=NNZ+NOXYZ                                        JOMI  59
ISN 0062          NME1=NM+NOXYZ                                       JOMI  60
ISN 0063          NME2=NME1+NOXYZ                                     JOMI  61
ISN 0064          NME3=NME2+NOXYZ                                     JOMI  62
ISN 0065          NS=NME3+NOXYZ                                       JOMI  63
ISN 0066          NB=NS+NOXYZ                                         JOMI  64
ISN 0067          NOXB=NB+NOXYZ                                       JOMI  65
ISN 0068          NOYB=NOXB+NOXYZ                                     JOMI  66
ISN 0069          NOZB=NOYB+NOXYZ                                     JOMI  67
ISN 0070          NADD=NOZB+NOXYZ+1                                   JOMI  68
ISN 0071          IF (NSTAT.EQ.0) GO TO 125                           JOMI  69
ISN 0073          NMS=NADD-1                                          JOMI  70
ISN 0074          NME1S=NMS+NOXYZ                                     JOMI  71
ISN 0075          NME2S=NME1S+NOXYZ                                   JOMI  72
ISN 0076          NME3S=NME2S+NOXYZ                                   JOMI  73
ISN 0077          NSS=NME3S+NOXYZ                                     JOMI  74
ISN 0078          NBS=NSS+NOXYZ                                       JOMI  75
ISN 0079          NADD=NBS+NOXYZ+1                                    JOMI  76
```

```
ISN 0080        125 DO 140 IIZ=1,NOXYZ                                          JOMI  77
ISN 0081            READ (5,8010) BCD1,BCD2,NXZNO,NYZNO,NZZNO                   JOMI  78
ISN 0082       8010 FORMAT(A4,A2,3I5)                                           JOMI  79
ISN 0083            WRITE (6,8015) BCD1,BCD2,NXZNO,NYZNO,NZZNO                  JOMI  80
ISN 0084       8015 FORMAT(1H0,A4,A2,3I5)                                       JOMI  81
ISN 0085            IF(BCD1.NE.ZONE) CALL JOM13(7)                              JOMI  82
ISN 0087            NZNO=(NZZNO-1)*NOXY+(NYZNO-1)*NOX+NXZNO                     JOMI  83
ISN 0088            LNX=NNX+NZNO                                                JOMI  84
ISN 0089            NADD=(NADD+1)/2                                             JOMI  85
ISN 0090            N(LNX)=NADD                                                 JOMI  86
ISN 0091            NT1=NADD                                                    JOMI  87
ISN 0092            LOXB=NOXB+NZNO                                              JOMI  88
ISN 0093            N(LOXB)=JOM16(NADD)                                         JOMI  89
ISN 0094             NADD=NADD                                                  JOMI  90
ISN 0095            LXZ=NXZBD+NXZNO                                             JOMI  91
ISN 0096            IF(X(NT1).NE.X(LXZ-1).OR.X(NADD-1).NE.X(LXZ)) GO TO 145     JOMI  92
ISN 0098            LNY=NNY+NZNO                                                JOMI  93
ISN 0099            N(LNY)=NADD                                                 JOMI  94
ISN 0100            NT1=NADD                                                    JOMI  95
ISN 0101            LOYB=NOYB+NZNO                                              JOMI  96
ISN 0102            N(LOYB)=JOM16(NADD)                                         JOMI  97
ISN 0103             NADD=NADD                                                  JOMI  98
ISN 0104            LYZ=NYZBD+NYZNO                                             JOMI  99
ISN 0105            IF(X(NT1).NE.X(LYZ-1).OR.X(NADD-1).NE.X(LYZ)) GO TO 145     JOMI 100
ISN 0107            LNZ=NNZ+NZNO                                                JOMI 101
ISN 0108            N(LNZ)=NADD                                                 JOMI 102
ISN 0109            NT1=NADD                                                    JOMI 103
ISN 0110            LOZB=NOZB+NZNO                                              JOMI 104
ISN 0111            N(LOZB)=JOM16(NADD)                                         JOMI 105
ISN 0112             NADD=NADD                                                  JOMI 106
ISN 0113            LZZ=NZZBD+NZZNO                                             JOMI 107
ISN 0114            IF(X(NT1).NE.X(LZZ-1).OR.X(NADD-1).NE.X(LZZ)) GO TO 145     JOMI 108
ISN 0116            NOB=N(LOXB)*N(LOYB)*N(LOZB)                                 JOMI 109
ISN 0117            NMA=NM+NZNO                                                 JOMI 110
ISN 0118            NME1A=NME1+NZNO                                             JOMI 111
ISN 0119            NME2A=NME2+NZNO                                             JOMI 112
ISN 0120            NME3A=NME3+NZNO                                             JOMI 113
ISN 0121            NSA=NS+NZNO                                                 JOMI 114
```

```
ISN 0122          NBA=NB+NZNO                                    JOMI 115
ISN 0123          NMB=2*NADD-2                                   JOMI 116
ISN 0124          N(NMA)=NMB                                     JOMI 117
ISN 0125          NME1B=NMB+NOB                                  JOMI 118
ISN 0126          N(NME1A)=NME1B                                 JOMI 119
ISN 0127          NME2B=NME1B+NOB                                JOMI 120
ISN 0128          N(NME2A)=NME2B                                 JOMI 121
ISN 0129          NME3B=NME2B+NOB                                JOMI 122
ISN 0130          N(NME3A)=NME3B                                 JOMI 123
ISN 0131          NSB=NME3B+NOB                                  JOMI 124
ISN 0132          N(NSA)=NSB                                     JOMI 125
ISN 0133          NBB=NSB+NOB                                    JOMI 126
ISN 0134          N(NBA)=NBB                                     JOMI 127
ISN 0135          NADD=NBB+NOB                                   JOMI 128
ISN 0136          IF(NSTAT.EQ.0) GO TO 130                       JOMI 129
ISN 0138          NMSA=NMS+NZNO                                  JOMI 130
ISN 0139          NME1SA=NME1S+NZNO                              JOMI 131
ISN 0140          NME2SA=NME2S+NZNO                              JOMI 132
ISN 0141          NME3SA=NME3S+NZNO                              JOMI 133
ISN 0142          NSSA=NSS+NZNO                                  JOMI 134
ISN 0143          NBSA=NBS+NZNO                                  JOMI 135
ISN 0144          NMSB=NADD                                      JOMI 136
ISN 0145          N(NMSA)=NADD                                   JOMI 137
ISN 0146          NME1SB=NADD+NOB                                JOMI 138
ISN 0147          N(NME1SA)=NME1SB                               JOMI 139
ISN 0148          NME2SB=NME1SB+NOB                              JOMI 140
ISN 0149          N(NME2SA)=NME2SB                               JOMI 141
ISN 0150          NME3SB=NME2SB+NOB                              JOMI 142
ISN 0151          N(NME3SA)=NME3SB                               JOMI 143
ISN 0152          NSSB=NME3SB+NOB                                JOMI 144
ISN 0153          N(NSSA)=NSSB                                   JOMI 145
ISN 0154          NBSB=NSSB+NOB                                  JOMI 146
ISN 0155          N(NBSA)=NBSB                                   JOMI 147
ISN 0156          NADD=NBSB+NOB                                  JOMI 148
ISN 0157      130 DO 135 IIB=1,NOB                               JOMI 149
```

```
ISN 0158          READ (5,8010) BCD1,BCD2,NXBNO,NYBNO,NZBNO                JOMI 150
ISN 0159          WRITE (6,8015) BCD1,BCD2,NXBNO,NYBNO,NZBNO               JOMI 151
ISN 0160          IF(BCD1.NE.BLOCK) CALL JOM13(7)                          JOMI 152
ISN 0162          NBNO=((NZBNO-1)*N(LOYB)+NYBNO-1)*N(LOXB)+NXBNO           JOMI 153
ISN 0163          NMC=NMB+NBNO                                             JOMI 154
ISN 0164          NME1C=NME1B+NBNO                                         JOMI 155
ISN 0165          NME2C=NME2B+NBNO                                         JOMI 156
ISN 0166          NME3C=NME3B+NBNO                                         JOMI 157
ISN 0167          NSC=NSB+NBNO                                             JOMI 158
ISN 0168          NBC=NBB+NBNO                                             JOMI 159
ISN 0169          CALL JOM11(NADD,N(NMC),N(NSC),N(NME1C),N(NME2C),         JOMI 160
                 1N(NME3C),N(NBC),1)                                       JOMI 161
            C     JOM11 IS JOMR                                            JOMI 162
ISN 0170          IF(NSTAT.EQ.0) GO TO 135                                 JOMI 163
ISN 0172          NMSC=NMSB+NBNO                                           JOMI 164
ISN 0173          NME1SC=NME1SB+NBNO                                       JOMI 165
ISN 0174          NME2SC=NME2SB+NBNO                                       JOMI 166
ISN 0175          NME3SC=NME3SB+NBNO                                       JOMI 167
ISN 0176          NSSC=NSSB+NBNO                                           JOMI 168
ISN 0177          NBSC=NBSB+NBNO                                           JOMI 169
ISN 0178          CALL JOM11(NADD,N(NMSC),N(NSSC),N(NME1SC),               JOMI 170
                 1N(NME2SC),N(NME3SC),N(NBSC),-1)                          JOMI 171
            C     JOM11 IS JOMR                                            JOMI 172
ISN 0179      135 CONTINUE                                                 JOMI 173
ISN 0180          NADD=NADD+1                                              JOMI 174
ISN 0181      140 CONTINUE                                                 JOMI 175
ISN 0182          CALL JOM12(NADD)                                         JOMI 176
            C     JOM12 IS JOMQ                                            JOMI 177
ISN 0183          BIG=3.*DMAX1(XPBD-XMBD,YPBD-YMBD,ZPBD-ZMBD)              JOMI 178
ISN 0184          ID=1                                                     JOMI 179
ISN 0185          N(NADD1)=NADD-NADD1                                      JOMI 180
ISN 0186          RETURN                                                   JOMI 181
ISN 0187      145 CALL JOM13(3)                                            JOMI 182
            C     JOM13 IS DGNSTK                                          JOMI 183
ISN 0188          RETURN                                                   JOMI 184
ISN 0189          END                                                      JOMI 185
```

```
ISN 0002          SUBROUTINE LOOKZ(XONE,YONE,ZONE)                                  LOKZ   1
ISN 0003          IMPLICIT REAL*8(A-H,O-Z)                                          LOKZ   2
ISN 0004          REAL*4 DUMMY,SGNF,SGNF2                                           LOKZ   3
ISN 0005          DIMENSION X(1)                                                    LOKZ   4
ISN 0006          COMMON X                                                          LOKZ   5
ISN 0007          COMMON/GEOMC/XTWO,YTWO,ZTWO,X1,Y1,Z1,ETA,ETAUSD,BLZON,            LOKZ   6
                 2    MARK,NMED,NREG                                                LOKZ   7
ISN 0008          COMMON/GEOM9/NZ,NB,NXBL,NYBL,NZBL                                 LOKZ   8
ISN 0009          COMMON/GEOMA/ID,NSTAT                                             LOKZ   9
ISN 0010          COMMON/JOMIN2/DUM2(6),NOX,NOY,NOZ,NDUM(2)                         LOKZ  10
ISN 0011          COMMON/JOMIN3/NXZB,NYZB,NZZB,DUMMY(18)                            LOKZ  11
ISN 0012          COMMON/GEOM77/NBOUND,SGNF,NBD2,SGNF2                              LOKZ  12
ISN 0013          COMMON/GEOM39/NERR                                                LOKZ  13
ISN 0014          IF(XONE.LT.X(NXZB)) GO TO 135                                     LOKZ  14
ISN 0016          DO 100 I=1,NOX                                                    LOKZ  15
ISN 0017          I=I                                                               LOKZ  16
ISN 0018          LXZB=NXZB+I                                                       LOKZ  17
ISN 0019          IF(XONE.LE.X(LXZB)) GO TO 105                                     LOKZ  18
ISN 0021      100 CONTINUE                                                          LOKZ  19
ISN 0022          GO TO 135                                                         LOKZ  20
ISN 0023      105 NXZ=I                                                             LOKZ  21
ISN 0024          IF(YONE.LT.X(NYZB)) GO TO 135                                     LOKZ  22
ISN 0026          DO 110 I=1,NOY                                                    LOKZ  23
ISN 0027          I=I                                                               LOKZ  24
ISN 0028          LYZB=NYZB+I                                                       LOKZ  25
ISN 0029          IF(YONE.LE.X(LYZB)) GO TO 115                                     LOKZ  26
ISN 0031      110 CONTINUE                                                          LOKZ  27
ISN 0032          GO TO 135                                                         LOKZ  28
ISN 0033      115 NYZ=I                                                             LOKZ  29
ISN 0034          IF(ZONE.LT.X(NZZB)) GO TO 135                                     LOKZ  30
ISN 0036          DO 120 I=1,NOZ                                                    LOKZ  31
ISN 0037          I=I                                                               LOKZ  32
ISN 0038          LZZB=NZZB+I                                                       LOKZ  33
ISN 0039          IF(ZONE.LE.X(LZZB)) GO TO 125                                     LOKZ  34
ISN 0041      120 CONTINUE                                                          LOKZ  35
ISN 0042          GO TO 135                                                         LOKZ  36
ISN 0043      125 NZ=((I-1)*NOY+NYZ-1)*NOX+NXZ                                      LOKZ  37
ISN 0044          IF(NERR.GT.0) GO TO 130                                           LOKZ  38
```

```
ISN 0046          NERR=1                                                  LOKZ  39
ISN 0047          CALL JOM9(XONE,YONE,ZONE)                               LOKZ  40
            C     JOM9 IS LOOKB          JOM15 IS PCK                     LOKZ  41
ISN 0048          NBOUND=0                                                LOKZ  42
ISN 0049          SGNF=0.                                                 LOKZ  43
ISN 0050          CALL JOM15                                              LOKZ  44
ISN 0051          CALL JOM6(XONE,YONE,ZONE,1,NMED)                        LOKZ  45
            C     JOM6 IS FINDR                                           LOKZ  46
ISN 0052          NREG=1                                                  LOKZ  47
ISN 0053          IF(NSTAT.NE.0) CALL JOM6(XONE,YONE,ZONE,3,NREG)         LOKZ  48
            C     JOM6 IS FINDR                                           LOKZ  49
ISN 0055      130 RETURN                                                  LOKZ  50
ISN 0056      135 CALL JOM13(4)                                           LOKZ  51
ISN 0057          STOP                                                    LOKZ  52
ISN 0058             END                                                  LOKZ  53
```

```
ISN 0002          BLOCK DATA                                                    GOMH   1
ISN 0003          COMMON/GEOMH/HMALE,FEMALE,HIT,COMMA,ZONE,BLOCK,MEDIA,SURFAC,  GOMH   2
                 2SECTOR,COFS(13),REGION,SIR,HMADAM,HMISS,HMARR,SINGLE          GOMH   3
ISN 0004          COMMON/GEOM39/NERR                                            GOMH   4
ISN 0005          COMMON/NRC/NR(31)                                             GOMH   5
ISN 0006          DATA HMALE,FEMALE,HIT,COMMA,ZONE,BLOCK,MEDIA,SURFAC,SECTOR,   GOMH   6
                 2 COFS(1),COFS(2),COFS(3),COFS(4),COFS(5),COFS(6),COFS(7),COFS(8),  GOMH   7
                 3 COFS(9),COFS(10),COFS(11),COFS(12),COFS(13),REGION,SIR,HMADAM,  GOMH   8
                 4 HMISS,HMARR,SINGLE/                                          GOMH   9
                 5 4HMALE, 4HFEMA, 4HIT  , 4H,   , 4HZONE, 4HBLOC, 4HMEDI,      GOMH  10
                 6 4HSURF, 4HSECT, 4HXSQ , 4HYSQ , 4HZSQ , 4HXY  , 4HXZ  ,      GOMH  11
                 7 4HYZ  , 4HX   , 4HY   , 4HZ   , 4H    , 4HYX  , 4HZX  ,      GOMH  12
                 8 4HZY  , 4HREGI, 4HSIR , 4HMADA, 4HMISS, 4HMARR, 4HSING/      GOMH  13
ISN 0007          DATA NERR/0/                                                  GOMH  14
ISN 0008          DATA NR/                                                      GOMH  15
                 1    1,2,4,8,16,32,64,128,256,512,1024,2048,4096,8192,16384,   GOMH  16
                 2    32768,65536,131072,262144,524288,1048576,2097152,4194304, GOMH  17
                 3    8388608,16777216,33554432,67108864,134217728,268435456,   GOMH  18
                 4    536870912,1073741824/                                     GOMH  19
ISN 0009          END                                                           GOMH  20
```

```
C       BOUND                                                           JOM4   1
        SUBROUTINE JOM4                                                 JOM4   2
        IMPLICIT REAL*8(A-H,O-Z)                                        JOM4   3
        REAL*4 DUM1,DUM2,DUM3                                           JOM4   4
        DIMENSION X(1),N(1)                                             JOM4   5
        COMMON X                                                        JOM4   6
        COMMON/GEOM4/XONE,YONE,ZONE,XTWO,YTWO,ZTWO,DIST,DUM4,           JOM4   7
       2    NCUE,DUM1                                                   JOM4   8
        COMMON/GEOM9/NZ,NBL,NXBL,NYBL,NZBL                              JOM4   9
        COMMON/JOMIN3/DUM2(6),NX1,NY1,NZ1,DUM3(12)                      JOM4  10
        EQUIVALENCE(X,N)                                                JOM4  11
        NX2=NX1+NZ                                                      JOM4  12
        NY2=NY1+NZ                                                      JOM4  13
        NZ2=NZ1+NZ                                                      JOM4  14
        NNX=N(NX2)+NXBL                                                 JOM4  15
        NNY=N(NY2)+NYBL                                                 JOM4  16
        NNZ=N(NZ2)+NZBL                                                 JOM4  17
        NB=0                                                            JOM4  18
        NBX=0                                                           JOM4  19
        NBY=0                                                           JOM4  20
        NBZ=0                                                           JOM4  21
        NCUE=0                                                          JOM4  22
        XDIST=XTWO-XONE                                                 JOM4  23
        YDIST=YTWO-YONE                                                 JOM4  24
        ZDIST=ZTWO-ZONE                                                 JOM4  25
        IF(XDIST)100,125,105                                            JOM4  26
  100   IF(XTWO-X(NNX-1)) 110,125,125                                   JOM4  27
  105   IF(XTWO-X(NNX)) 125,125,115                                     JOM4  28
  110   NBX=-2                                                          JOM4  29
        GO TO 120                                                       JOM4  30
  115   NBX=1                                                           JOM4  31
  120   NB=1                                                            JOM4  32
  125   IF(YDIST)130,155,135                                            JOM4  33
  130   IF(YTWO-X(NNY-1)) 140,155,155                                   JOM4  34
  135   IF(YTWO-X(NNY)) 155,155,145                                     JOM4  35
  140   NBY=-4                                                          JOM4  36
        GO TO 150                                                       JOM4  37
```

```
ISN 0037        145 NBY=3                                          JOM4  38
ISN 0038        150 NB=1                                           JOM4  39
ISN 0039        155 IF(ZDIST)160,185,165                           JOM4  40
ISN 0040        160 IF(ZTWO-X(NNZ-1)) 170,185,185                  JOM4  41
ISN 0041        165 IF(ZTWO-X(NNZ)) 185,185,175                    JOM4  42
ISN 0042        170 NBZ=-6                                         JOM4  43
ISN 0043            GO TO 180                                      JOM4  44
ISN 0044        175 NBZ=5                                          JOM4  45
ISN 0045        180 NB=1                                           JOM4  46
ISN 0046        185 IF(NB.LE.0) GO TO 280                          JOM4  47
ISN 0048            DIST4=2.0                                      JOM4  48
ISN 0049            IF(NBX)190,205,195                             JOM4  49
ISN 0050        190 XBOND=X(NNX-1)                                 JOM4  50
ISN 0051            GO TO 200                                      JOM4  51
ISN 0052        195 XBOND=X(NNX)                                   JOM4  52
ISN 0053        200 DIST4=(XBOND-XONE)/XDIST                       JOM4  53
ISN 0054            NB=1                                           JOM4  54
ISN 0055        205 IF(NBY)210,225,215                             JOM4  55
ISN 0056        210 YBOND=X(NNY-1)                                 JOM4  56
ISN 0057            GO TO 220                                      JOM4  57
ISN 0058        215 YBOND=X(NNY)                                   JOM4  58
ISN 0059        220 DIST2=(YBOND-YONE)/YDIST                       JOM4  59
ISN 0060            IF(DIST4.LE.DIST2) GO TO 225                   JOM4  60
ISN 0062            DIST4=DIST2                                    JOM4  61
ISN 0063            NB=2                                           JOM4  62
ISN 0064        225 IF(NBZ)230,245,235                             JOM4  63
ISN 0065        230 ZBOND=X(NNZ-1)                                 JOM4  64
ISN 0066            GO TO 240                                      JOM4  65
ISN 0067        235 ZBOND=X(NNZ)                                   JOM4  66
ISN 0068        240 DIST2=(ZBOND-ZONE)/ZDIST                       JOM4  67
ISN 0069            IF(DIST4.LE.DIST2) GO TO 245                   JOM4  68
ISN 0071            DIST4=DIST2                                    JOM4  69
ISN 0072            NB=3                                           JOM4  70
ISN 0073        245 IF(NB.NE.1) GO TO 250                          JOM4  71
ISN 0075            XTWO=XBOND                                     JOM4  72
ISN 0076            NCUE=IABS (NBX)                                JOM4  73
ISN 0077            GO TO 255                                      JOM4  74
ISN 0078        250 XTWO=XDIST*DIST4+XONE                          JOM4  75
```

```
ISN 0079        255 IF(NB.NE.2) GO TO 260                                JOM4  76
ISN 0081            YTWO=YBOND                                           JOM4  77
ISN 0082            NCUE=IABS (NBY)                                      JOM4  78
ISN 0083            GO TO 265                                            JOM4  79
ISN 0084        260 YTWO=YDIST*DIST4+YONE                                JOM4  80
ISN 0085        265 IF(NB.NE.3) GO TO 270                                JOM4  81
ISN 0087            ZTWO=ZBOND                                           JOM4  82
ISN 0088            NCUE=IABS (NBZ)                                      JOM4  83
ISN 0089            GO TO 275                                            JOM4  84
ISN 0090        270 ZTWO=ZDIST*DIST4+ZONE                                JOM4  85
ISN 0091        275 DIST=DIST*DIST4                                      JOM4  86
ISN 0092        280 RETURN                                               JOM4  87
ISN 0093               END                                               JOM4  88
```

```
C     INTER
      SUBROUTINE JOM5
      IMPLICIT REAL*8(A-H,O-Z)
      REAL*4 R,DUM1,DUM2,DUM4,DUM6,RGBD,SGNF,SGNF2,AND
      DIMENSION X(1),N(1),R(1)
      COMMON/NRC/NR(31)
      COMMON X
      COMMON/GEOM4/XONE,YONE,ZONE,XTWO,YTWO,ZTWO,DIST4,DIST,
     2    NCUE,NCR
      COMMON/GEOM9/NZ,NBL,NXBL,NYBL,NZBL
      COMMON/GEOM56/RGBD,NOBD
      COMMON/JOMIN3/DUM1(13),NS,NB,DUM2(6)
      COMMON/GEOM7/X1,Y1,Z1,X2,Y2,Z2,DIST1,NCR1
      COMMON/GEOMA/ID,NSTAT
      COMMON/GEOMC/DUM5(6),DUM7(3),DUM4,NMED,DUM6
      COMMON/GEOM77/NBOUND,SGNF,NBD2,SGNF2
      EQUIVALENCE(R,NR),(NRGBD,RGBD)
      EQUIVALENCE(X,N)
      IF(ID.GT.1) GO TO 100
      CALL JOM6(XONE,YONE,ZONE,1,NEWMED)
C     JOM6 IS FINDR
      NS1=NS+NZ
      NB1=NB+NZ
      NS2=N(NS1)+NBL
      NB2=N(NB1)+NBL
      NOS=N(NS2)
      NBD=N(NB2)
      IF(NEWMED.EQ.NMED) GO TO 100
      NMED=NEWMED
      XTWO=XONE
      YTWO=YONE
      ZTWO=ZONE
      DIST=0.
      NCR=1
      GO TO 130
  100 IF(NOS.GT.0) GO TO 110
      NCR=0
  105 NBOUND=0
```

```
ISN 0040          SGNF=0.                                          JOM5  39
ISN 0041          GO TO 130                                        JOM5  40
ISN 0042      110 DIST=0.                                          JOM5  41
ISN 0043          DIST2=1.0                                        JOM5  42
ISN 0044          X1=XONE                                          JOM5  43
ISN 0045          Y1=YONE                                          JOM5  44
ISN 0046          Z1=ZONE                                          JOM5  45
ISN 0047      115 X2=XTWO                                          JOM5  46
ISN 0048          Y2=YTWO                                          JOM5  47
ISN 0049          Z2=ZTWO                                          JOM5  48
ISN 0050          NCR=0                                            JOM5  49
ISN 0051          DO 120 I=1,NOS                                   JOM5  50
ISN 0052          IF(IAND(NRGBD,NR(I)).EQ.0) GO TO 120             JOM5  51
ISN 0054          NBD1=NBD+I                                       JOM5  52
ISN 0055          CALL JOM7(N(NBD1))                               JOM5  53
            C     JOM7 IS CROSS                                    JOM5  54
ISN 0056          IF(NCR1.LE.0) GO TO 120                          JOM5  55
ISN 0058          NCR=NCR1                                         JOM5  56
ISN 0059          NOBD=I                                           JOM5  57
ISN 0060          DIST2=DIST2*DIST1                                JOM5  58
ISN 0061      120 CONTINUE                                         JOM5  59
ISN 0062          IF(NCR.EQ.0) GO TO 105                           JOM5  60
ISN 0064          NBOUND=NBD2                                      JOM5  61
ISN 0065          SGNF=SGNF2                                       JOM5  62
ISN 0066          CALL JOM6(X2,Y2,Z2,2,NEWMED)                     JOM5  63
            C     JOM6 IS FINDR                                    JOM5  64
ISN 0067          IF(NMED.NE.NEWMED) GO TO 125                     JOM5  65
ISN 0069          X1=X2                                            JOM5  66
ISN 0070          Y1=Y2                                            JOM5  67
ISN 0071          Z1=Z2                                            JOM5  68
ISN 0072          DIST=DIST+DIST2                                  JOM5  69
ISN 0073          DIST2=1.0-DIST                                   JOM5  70
ISN 0074          GO TO 115                                        JOM5  71
ISN 0075      125 NMED=NEWMED                                      JOM5  72
ISN 0076          XTWO=X2                                          JOM5  73
ISN 0077          YTWO=Y2                                          JOM5  74
ISN 0078          ZTWO=Z2                                          JOM5  75
ISN 0079          DIST=DIST+DIST2                                  JOM5  76
ISN 0080      130 RETURN                                           JOM5  77
ISN 0081             END                                           JOM5  78
```

```
                C     FINDR                                                    JOM6   1
ISN 0002              SUBROUTINE JOM6(XONE,YONE,ZONE,ID,NMED)                  JOM6   2
ISN 0003              IMPLICIT REAL*8(A-H,O-Z)                                 JOM6   3
ISN 0004              REAL*8 JOM8                                              JOM6   4
ISN 0005              REAL*4 X,R,DUMMY,REG,OK,RGBD,SGNF,SGNF2,AND,OR,COMPL     JOM6   5
ISN 0006              DIMENSION X(1),R(1),N(1)                                 JOM6   6
ISN 0007              COMMON X                                                 JOM6   7
ISN 0008              COMMON/GEOM9/NZ,NBL,NXBL,NYBL,NZBL                       JOM6   8
ISN 0009              COMMON/GEOM56/RGBD,NOBD                                  JOM6   9
ISN 0010              COMMON/JOMIN3/DUMMY(9),NM,NME1,NME2,NME3,NS,NB,NMS,      JOM6  10
                     $NME1S,NME2S,NME3S,NSS,NBS                                JOM6  11
ISN 0011              COMMON/GEOM77/NBOUND,SGNF,NBD2,SGNF2                     JOM6  12
ISN 0012              EQUIVALENCE (R,NR),(IOK,OK),(RGBD,NRGBD)                 JOM6  13
ISN 0013              EQUIVALENCE(X,N)                                         JOM6  14
ISN 0014              COMMON/NRC/NR(31)                                        JOM6  15
ISN 0015              IF(ID.GT.1) GO TO 140                                    JOM6  16
ISN 0017              NS1=NS+NZ                                                JOM6  17
ISN 0018              NB1=NB+NZ                                                JOM6  18
ISN 0019              NM1=NM+NZ                                                JOM6  19
ISN 0020              NME4=NME1+NZ                                             JOM6  20
ISN 0021              NME5=NME2+NZ                                             JOM6  21
ISN 0022              NME6=NME3+NZ                                             JOM6  22
ISN 0023          100 NS2=N(NS1)+NBL                                           JOM6  23
ISN 0024              NB2=N(NB1)+NBL                                           JOM6  24
ISN 0025              NM2=N(NM1)+NBL                                           JOM6  25
ISN 0026              NME7=N(NME4)+NBL                                         JOM6  26
ISN 0027              NME8=N(NME5)+NBL                                         JOM6  27
ISN 0028              NME9=N(NME6)+NBL                                         JOM6  28
ISN 0029              NOR=N(NM2)                                               JOM6  29
ISN 0030              NMD=N(NME9)                                              JOM6  30
ISN 0031              IF(NOR.GT.1) GO TO 105                                   JOM6  31
ISN 0033              NMED=N(NMD+1)                                            JOM6  32
ISN 0034              RGBD=0.                                                  JOM6  33
ISN 0035              GO TO 160                                                JOM6  34
ISN 0036          105 NOS=N(NS2)                                               JOM6  35
ISN 0037              NBD=N(NB2)                                               JOM6  36
ISN 0038              NPOS=N(NME7)                                             JOM6  37
ISN 0039              NNEG=N(NME8)                                             JOM6  38
```

```
ISN 0040          REG=0.                                                JOM6  39
ISN 0041          DO 120 I=1,NOS                                        JOM6  40
ISN 0042          NBD1=NBD+I                                            JOM6  41
ISN 0043          IF(N(NBD1).NE.NBOUND) GO TO 110                       JOM6  42
ISN 0045          IF(SGNF)120,115,115                                   JOM6  43
ISN 0046      110 FO=JOM8(XONE,YONE,ZONE,N(NBD1))                       JOM6  44
            C     JOM8 IS FUNC                                          JOM6  45
ISN 0047          IF(FO.LT.0.) GO TO 120                                JOM6  46
ISN 0049      115 REG=OR(REG,R(I))                                      JOM6  47
ISN 0050      120 CONTINUE                                              JOM6  48
ISN 0051      125 DO 130 I=1,NOR                                        JOM6  49
ISN 0052          NPOS1=NPOS+I                                          JOM6  50
ISN 0053          OK=AND(COMPL(REG),X(NPOS1))                           JOM6  51
ISN 0054          IF(IOK.NE.0) GO TO 130                                JOM6  52
ISN 0056          NNEG1=NNEG+I                                          JOM6  53
ISN 0057          OK=AND(REG,X(NNEG1))                                  JOM6  54
ISN 0058          IF(IOK.EQ.0) GO TO 135                                JOM6  55
ISN 0060      130 CONTINUE                                              JOM6  56
ISN 0061          CALL JOM13(1)                                         JOM6  57
            C     JOM13 IS DGNSTK                                       JOM6  58
ISN 0062      135 NMD1=NMD+I                                            JOM6  59
ISN 0063          NMED=N(NMD1)                                          JOM6  60
ISN 0064          RGBD=OR(X(NPOS1),X(NNEG1))                            JOM6  61
ISN 0065          GO TO 160                                             JOM6  62
ISN 0066      140 IF(ID.GT.2) GO TO 155                                 JOM6  63
ISN 0068          REG=OR(AND(COMPL(REG),R(NOBD)),AND(REG,COMPL(R(NOBD))))  JOM6  64
ISN 0069          DO 150 I=1,NOS                                        JOM6  65
ISN 0070          IF (IAND(NR(I),ICOMPL(NRGBD)).EQ.0) GO TO 150         JOM6  66
ISN 0072          NBD1=NBD+I                                            JOM6  67
ISN 0073          FO=JOM8(XONE,YONE,ZONE,N(NBD1))                       JOM6  68
ISN 0074          IF(FO.GE.0.) GO TO 145                                JOM6  69
ISN 0076          REG=AND(REG,COMPL(R(I)))                              JOM6  70
ISN 0077          GO TO 150                                             JOM6  71
ISN 0078      145 REG=OR(REG,R(I))                                      JOM6  72
ISN 0079      150 CONTINUE                                              JOM6  73
ISN 0080          GO TO 125                                             JOM6  74
ISN 0081      155 NS1=NSS+NZ                                            JOM6  75
```

```
ISN 0082          NB1=NBS+NZ                                    JOM6  76
ISN 0083          NM1=NMS+NZ                                    JOM6  77
ISN 0084          NME4=NME1S+NZ                                 JOM6  78
ISN 0085          NME5=NME2S+NZ                                 JOM6  79
ISN 0086          NME6=NME3S+NZ                                 JOM6  80
ISN 0087          GO TO 100                                     JOM6  81
ISN 0088      160 RETURN                                        JOM6  82
ISN 0089          END                                           JOM6  83
```

```
C       CROSS FOR O5R GEOMETRY                                          JOM7   1
ISN 0002  SUBROUTINE JOM7(ID)                                           JOM7   2
ISN 0003  IMPLICIT REAL*8(A-H,O-Z)                                      JOM7   3
ISN 0004  REAL*8 JOM8                                                   JOM7   4
ISN 0005  REAL*4 SGNF,SGNF2,SNGL                                        JOM7   5
ISN 0006  DIMENSION X(1)                                                JOM7   6
ISN 0007  COMMON X                                                      JOM7   7
ISN 0008  COMMON/GEOM7/XONE,YONE,ZONE,XTWO,YTWO,ZTWO,DIST,              JOM7   8
         2    NCR                                                       JOM7   9
ISN 0009  COMMON/JOMIN8/NA,NB,NC,ND,NE,NF,NG,NH,NI,NJ                   JOM7  10
ISN 0010  COMMON/GEOM77/NBOUND,SGNF,NBD2,SGNF2                          JOM7  11
ISN 0011  IF(ID.NE.NBOUND) GO TO 100                                    JOM7  12
ISN 0013  FUN=0.                                                        JOM7  13
ISN 0014  GO TO 105                                                     JOM7  14
ISN 0015  100 FUN=JOM8(XONE,YONE,ZONE,ID)                               JOM7  15
C       JOM8 IS FUNC                                                    JOM7  16
ISN 0016  105 LA=NA+ID                                                  JOM7  17
ISN 0017  LB=NB+ID                                                      JOM7  18
ISN 0018  LC=NC+ID                                                      JOM7  19
ISN 0019  LD=ND+ID                                                      JOM7  20
ISN 0020  LE=NE+ID                                                      JOM7  21
ISN 0021  LF=NF+ID                                                      JOM7  22
ISN 0022  LG=NG+ID                                                      JOM7  23
ISN 0023  LH=NH+ID                                                      JOM7  24
ISN 0024  LI=NI+ID                                                      JOM7  25
ISN 0025  U=XTWO-XONE                                                   JOM7  26
ISN 0026  V=YTWO-YONE                                                   JOM7  27
ISN 0027  W=ZTWO-ZONE                                                   JOM7  28
ISN 0028  AU=X(LA)*U                                                    JOM7  29
ISN 0029  BV=X(LB)*V                                                    JOM7  30
ISN 0030  CW=X(LC)*W                                                    JOM7  31
ISN 0031  AUDVEW=AU+X(LD)*V+X(LE)*W                                     JOM7  32
ISN 0032  BVFW=BV+X(LF)*W                                               JOM7  33
ISN 0033  P=AUDVEW*U+BVFW*V+CW*W                                        JOM7  34
ISN 0034  Q=(AU+AUDVEW)*XONE+(BV+BVFW+X(LD)*U)*YONE+                    JOM7  35
         1(CW+CW+X(LE)*U+X(LF)*V)*ZONE+X(LG)*U+X(LH)*V                  JOM7  36
         2+X(LI)*W                                                      JOM7  37
ISN 0035  NCR=0                                                         JOM7  38
```

```
ISN 0036          IF(P.EQ.0.) GO TO 125                                  JOM7  39
ISN 0038          IF(FUN.EQ.0.) GO TO 130                                JOM7  40
ISN 0040          F1=FUN+P+Q                                             JOM7  41
ISN 0041          Q=Q/2.0                                                JOM7  42
ISN 0042          IF(FUN*F1.LT.0.) GO TO 120                             JOM7  43
ISN 0044          IF(P*Q.GE.0.) GO TO 115                                JOM7  44
ISN 0046          DISCR=P*FUN                                            JOM7  45
ISN 0047          IF(DISCR.LT.0.) GO TO 115                              JOM7  46
ISN 0049          DISCR=Q*Q-DISCR                                        JOM7  47
ISN 0050          IF(DISCR.LE.0.0.OR.DABS(P).LE.DABS(Q)) GO TO 115       JOM7  48
ISN 0052          DIST=(-Q+DSIGN(DSQRT(DISCR),Q))/P                      JOM7  49
ISN 0053      110 NCR=1                                                  JOM7  50
ISN 0054          XTWO=U*DIST+XONE                                       JOM7  51
ISN 0055          YTWO=V*DIST+YONE                                       JOM7  52
ISN 0056          ZTWO=W*DIST+ZONE                                       JOM7  53
ISN 0057          NBD2=ID                                                JOM7  54
ISN 0058          SGNF2=-SNGL(FUN)                                       JOM7  55
ISN 0059      115 RETURN                                                 JOM7  56
ISN 0060      120 DIST=(-Q-DSIGN(DSQRT(Q**2-P*FUN),FUN))/P               JOM7  57
ISN 0061          GO TO 110                                              JOM7  58
ISN 0062      125 IF(Q.EQ.0.) GO TO 115                                  JOM7  59
ISN 0064          DIST=-FUN/Q                                            JOM7  60
ISN 0065          IF(DIST.LE.0.) GO TO 115                               JOM7  61
ISN 0067          IF(1.0-DIST)115,110,110                                JOM7  62
ISN 0068      130 IF(P*DBLE(SGNF))135,115,115                            JOM7  63
ISN 0069      135 DIST=-Q/P                                              JOM7  64
ISN 0070          FUN=SGNF                                               JOM7  65
ISN 0071          IF (1.0.GE.DIST) GO TO 110                             JOM7  66
ISN 0073          RETURN                                                 JOM7  67
ISN 0074          END                                                    JOM7  68
```

```
              C      FUNC                                                      JOM8   1
ISN 0002             FUNCTION JOM8(XONE,YONE,ZONE,ID)                          JOM8   2
ISN 0003             IMPLICIT REAL*8(A-H,O-Z)                                  JOM8   3
ISN 0004             REAL*8 JOM8                                               JOM8   4
ISN 0005             DIMENSION X(1)                                            JOM8   5
ISN 0006             COMMON X                                                  JOM8   6
ISN 0007             COMMON/JOMIN8/NA,NB,NC,ND,NE,NF,NG,NH,NI,NJ               JOM8   7
ISN 0008             LA=NA+ID                                                  JOM8   8
ISN 0009             LB=NB+ID                                                  JOM8   9
ISN 0010             LC=NC+ID                                                  JOM8  10
ISN 0011             LD=ND+ID                                                  JOM8  11
ISN 0012             LE=NE+ID                                                  JOM8  12
ISN 0013             LF=NF+ID                                                  JOM8  13
ISN 0014             LG=NG+ID                                                  JOM8  14
ISN 0015             LH=NH+ID                                                  JOM8  15
ISN 0016             LI=NI+ID                                                  JOM8  16
ISN 0017             LJ=NJ+ID                                                  JOM8  17
ISN 0018             JOM8=(X(LA)*XONE+X(LD)*YONE+X(LE)*ZONE+X(LG))*            JOM8  18
                    1XONE+(X(LB)*YONE+                                         JOM8  19
                    $X(LF)*ZONE+X(LH))*YONE+(X(LC)*ZONE+X(LI))*ZONE+X(LJ)      JOM8  20
ISN 0019             RETURN                                                    JOM8  21
ISN 0020                END                                                    JOM8  22
```

```
C       LOOKB                                                           JOM9   1
ISN 0002      SUBROUTINE JOM9(XONE,YONE,ZONE)                           JOM9   2
ISN 0003      IMPLICIT REAL*8(A-H,O-Z)                                  JOM9   3
ISN 0004      REAL*4 DUMMY,DUM2                                         JOM9   4
ISN 0005      DIMENSION N(1),X(1)                                       JOM9   5
ISN 0006      COMMON N                                                  JOM9   6
ISN 0007      COMMON/GEOM9/NZ,NB,NXB,NYB,NZB                            JOM9   7
ISN 0008      COMMON/JOMIN3/DUMMY(3),NOX,NOY,NOZ,NXBB,NYBB,NZBB,DUM2(12) JOM9  8
ISN 0009      COMMON/GEOM39/NERR                                        JOM9   9
ISN 0010      EQUIVALENCE (X,N)                                         JOM9  10
ISN 0011  100 LNOX=NOX+NZ                                               JOM9  11
ISN 0012      LNOY=NOY+NZ                                               JOM9  12
ISN 0013      LNOZ=NOZ+NZ                                               JOM9  13
ISN 0014      LXBB=NXBB+NZ                                              JOM9  14
ISN 0015      LYBB=NYBB+NZ                                              JOM9  15
ISN 0016      LZBB=NZBB+NZ                                              JOM9  16
ISN 0017      KXBB=N(LXBB)                                              JOM9  17
ISN 0018      KYBB=N(LYBB)                                              JOM9  18
ISN 0019      KZBB=N(LZBB)                                              JOM9  19
ISN 0020      IF(XONE.LT.X(KXBB)) GO TO 135                             JOM9  20
ISN 0022      IEND=N(LNOX)                                              JOM9  21
ISN 0023      DO 105 I=1,IEND                                           JOM9  22
ISN 0024      I=I                                                       JOM9  23
ISN 0025      MXBB=KXBB+I                                               JOM9  24
ISN 0026      IF(XONE.LE.X(MXBB)) GO TO 110                             JOM9  25
ISN 0028  105 CONTINUE                                                  JOM9  26
ISN 0029      GO TO 135                                                 JOM9  27
ISN 0030  110 NXB=I                                                     JOM9  28
ISN 0031      IF(YONE.LT.X(KYBB)) GO TO 135                             JOM9  29
ISN 0033      IEND=N(LNOY)                                              JOM9  30
ISN 0034      DO 115 I=1,IEND                                           JOM9  31
ISN 0035      I=I                                                       JOM9  32
ISN 0036      MYBB=KYBB+I                                               JOM9  33
ISN 0037      IF(YONE.LE.X(MYBB)) GO TO 120                             JOM9  34
ISN 0039  115 CONTINUE                                                  JOM9  35
ISN 0040      GO TO 135                                                 JOM9  36
ISN 0041  120 NYB=I                                                     JOM9  37
ISN 0042      IF(ZONE.LT.X(KZBB)) GO TO 135                             JOM9  38
```

```
ISN 0044          IEND=N(LNOZ)                                          JOM9  39
ISN 0045          DO 125 I=1,IEND                                       JOM9  40
ISN 0046          I=I                                                   JOM9  41
ISN 0047          MZBB=KZBB+I                                           JOM9  42
ISN 0048          IF(ZONE.LE.X(MZBB)) GO TO 130                         JOM9  43
ISN 0050      125 CONTINUE                                              JOM9  44
ISN 0051          GO TO 135                                             JOM9  45
ISN 0052      130 NZB=I                                                 JOM9  46
ISN 0053          NB=((NZB-1)*N(LNOY)+NYB-1)*N(LNOX)+NXB                JOM9  47
ISN 0054          NERR=0                                                JOM9  48
ISN 0055          RETURN                                                JOM9  49
ISN 0056      135 IF(NERR.GT.0)  CALL JOM13(4)                          JOM9  50
ISN 0058          NERR=1                                                JOM9  51
ISN 0059          CALL LOOKZ(XONE,YONE,ZONE)                            JOM9  52
ISN 0060          GO TO 100                                             JOM9  53
ISN 0061             END                                                JOM9  54
```

```
                C     NEWB                                                          JM10   1
ISN 0002              SUBROUTINE JM10                                               JM10   2
ISN 0003              IMPLICIT REAL*8(A-H,O-Z)                                      JM10   3
ISN 0004              REAL*4 DUM2,DUM4                                              JM10   4
ISN 0005              DIMENSION N(1)                                                JM10   5
ISN 0006              COMMON N                                                      JM10   6
ISN 0007              COMMON/GEOM4/XONE,YONE,ZONE,X2,Y2,Z2,DUM1,DUM5,NCUE,NDUM      JM10   7
ISN 0008              COMMON/GEOM9/NZ,NBL,NXBL,NYBL,NZBL                            JM10   8
ISN 0009              COMMON/JOMIN2/XPBD,XMBD,YPBD,YMBD,ZPBD,ZMBD,NOX,NOY,NOZ,NOXY,NOXYZ JM10   9
ISN 0010              COMMON/JOMIN3/DUM2(3),NXB,NYB,NZB,DUM4(15)                    JM10  10
ISN 0011              ENTRY JOM10                                                   JM10  11
ISN 0012              NOXB=NXB+NZ                                                   JM10  12
ISN 0013              NOYB=NYB+NZ                                                   JM10  13
ISN 0014              NOZB=NZB+NZ                                                   JM10  14
ISN 0015              GO TO(100,105,110,115,120,125),NCUE                           JM10  15
ISN 0016          100 NXBL=NXBL+1                                                   JM10  16
ISN 0017              IF(NXBL.GT.N(NOXB)) GO TO 130                                 JM10  17
ISN 0019              NBL=NBL+1                                                     JM10  18
ISN 0020              GO TO 170                                                     JM10  19
ISN 0021          105 NXBL=NXBL-1                                                   JM10  20
ISN 0022              IF(NXBL.LE.0) GO TO 135                                       JM10  21
ISN 0024              NBL=NBL-1                                                     JM10  22
ISN 0025              GO TO 170                                                     JM10  23
ISN 0026          110 NYBL=NYBL+1                                                   JM10  24
ISN 0027              IF(NYBL.GT.N(NOYB)) GO TO 140                                 JM10  25
ISN 0029              NBL=NBL+N(NOXB)                                               JM10  26
ISN 0030              GO TO 170                                                     JM10  27
ISN 0031          115 NYBL=NYBL-1                                                   JM10  28
ISN 0032              IF(NYBL.LE.0) GO TO 145                                       JM10  29
ISN 0034              NBL=NBL-N(NOXB)                                               JM10  30
ISN 0035              GO TO 170                                                     JM10  31
ISN 0036          120 NZBL=NZBL+1                                                   JM10  32
ISN 0037              IF(NZBL.GT.N(NOZB)) GO TO 150                                 JM10  33
ISN 0039              NBL=NBL+N(NOYB)*N(NOXB)                                       JM10  34
ISN 0040              GO TO 170                                                     JM10  35
ISN 0041          125 NZBL=NZBL-1                                                   JM10  36
ISN 0042              IF(NZBL.LE.0) GO TO 155                                       JM10  37
ISN 0044              NBL=NBL-N(NOYB)*N(NOXB)                                       JM10  38
```

```
ISN 0045            GO TO 170                                          JM10  39
ISN 0046        130 IF(XPBD.LE.XONE) GO TO 165                         JM10  40
ISN 0048            NZ=NZ+1                                            JM10  41
ISN 0049            GO TO 160                                          JM10  42
ISN 0050        135 IF(XMBD.GE.XONE) GO TO 165                         JM10  43
ISN 0052            NZ=NZ-1                                            JM10  44
ISN 0053            GO TO 160                                          JM10  45
ISN 0054        140 IF(YPBD.LE.YONE) GO TO 165                         JM10  46
ISN 0056            NZ=NZ+NOX                                          JM10  47
ISN 0057            GO TO 160                                          JM10  48
ISN 0058        145 IF(YMBD.GE.YONE) GO TO 165                         JM10  49
ISN 0060            NZ=NZ-NOX                                          JM10  50
ISN 0061            GO TO 160                                          JM10  51
ISN 0062        150 IF(ZPBD.LE.ZONE) GO TO 165                         JM10  52
ISN 0064            NZ=NZ+NOXY                                         JM10  53
ISN 0065            GO TO 160                                          JM10  54
ISN 0066        155 IF(ZMBD.GE.ZONE) GO TO 165                         JM10  55
ISN 0068            NZ=NZ-NOXY                                         JM10  56
ISN 0069        160 CALL JOM9(XONE,YONE,ZONE)                          JM10  57
              C     JOM9 IS LOOKB                                      JM10  58
ISN 0070            GO TO 170                                          JM10  59
ISN 0071        165 NZ=0                                               JM10  60
ISN 0072        170 RETURN                                             JM10  61
ISN 0073                END                                            JM10  62
```

```
C       JOMR
ISN 0002      SUBROUTINE JOM11(NADD1,NOM,NOS,NME1,NME2,NME3,NBD,ID)
ISN 0003      DIMENSION IND(18)
ISN 0004      COMMON N(1)
ISN 0005      COMMON/GEOMH/HMALE,FEMALE,HIT,COMMA,ZONE,BLOCK,MEDIA,SURFAC,
             $SECTOR,COFS(13),REGION,SIR,HMADAM,HMISS,HMARR,SINGLE
ISN 0006      NADD=NADD1+1
ISN 0007      NME3=NADD1
ISN 0008      IF (ID.GE.0) GO TO 100
ISN 0010      NOM=JOM17(NADD,REGION)
ISN 0011      GO TO 105
ISN 0012  100 NOM=JOM17(NADD,MEDIA)
ISN 0013  105 IF(NOM.GT.1) GO TO 110
ISN 0015      NADD1=NADD-1
ISN 0016      NOS=0
ISN 0017      GO TO 135
ISN 0018  110 NBD=NADD-1
ISN 0019      NOS=JOM17(NADD,SURFAC)
ISN 0020      IF(NOS.GT.31) CALL JOM13(2)
C       JOM13 IS DGNSTK
ISN 0022      NME1=NADD-1
ISN 0023      NME2=NME1+NOM
ISN 0024      NADD1=NME2+NOM
ISN 0025      DO 130 I=1,NOM
ISN 0026      READ (5,8000) S1,S2,(IND(J),J=1,NOS)
ISN 0027 8000 FORMAT(A4,A2,18I3)
ISN 0028      WRITE (6,8005) S1,S2,(IND(J),J=1,NOS)
ISN 0029 8005 FORMAT(1X,A4,A2,18I3)
ISN 0030      IF(S1.NE.SECTOR) CALL JOM13(7)
ISN 0032      NSP=0
ISN 0033      NSN=0
ISN 0034      DO 125 J=1,NOS
ISN 0035      IF(IND(J))120,125,115
ISN 0036  115 NSP=NSP+2**(J-1)
ISN 0037      GO TO 125
ISN 0038  120 NSN=NSN+2**(J-1)
ISN 0039  125 CONTINUE
ISN 0040      NP=NME1+I
```

```
ISN 0041          NN=NME2+I                                  JM11  39
ISN 0042          N(NP)=NSP                                  JM11  40
ISN 0043      130 N(NN)=NSN                                  JM11  41
ISN 0044      135 RETURN                                     JM11  42
ISN 0045          END                                        JM11  43
```

```
                C     JOMQ                                                      JM12   1
ISN 0002              SUBROUTINE JOM12(NADD)                                    JM12   2
ISN 0003              REAL*8 X,COF                                              JM12   3
ISN 0004              DIMENSION X(1)                                            JM12   4
ISN 0005              DIMENSION BCD1(4),BCD2(4),COF(4),IO(17)                   JM12   5
ISN 0006              COMMON X                                                  JM12   6
ISN 0007              COMMON/JOMIN8/NA,NB,NC,ND,NE,NF,NG,NH,NI,NJ               JM12   7
ISN 0008              COMMON/GEOMH/HMALE,FEMALE,HIT,COMMA,ZONE,BLOCK,MEDIA,SURFAC,  JM12   8
                     $SECTOR,COFS(13),REGION,SIR,HMADAM,HMISS,HMARR,SINGLE      JM12   9
ISN 0009              EQUIVALENCE(COFS(10),BLANK)                               JM12  10
ISN 0010              READ (5,8000) NOBD,(IO(I),I=1,17)                         JM12  11
ISN 0011         8000 FORMAT(I5,16A4,A2)                                        JM12  12
ISN 0012              WRITE (6,8005) NOBD,(IO(I),I=1,17)                        JM12  13
ISN 0013         8005 FORMAT(1H0,I5,16A4,A2)                                    JM12  14
ISN 0014              IF(NOBD.LE.0) GO TO 130                                   JM12  15
ISN 0016              NA=NADD/2                                                 JM12  16
ISN 0017              NB=NA+NOBD                                                JM12  17
ISN 0018              NC=NB+NOBD                                                JM12  18
ISN 0019              ND=NC+NOBD                                                JM12  19
ISN 0020              NE=ND+NOBD                                                JM12  20
ISN 0021              NF=NE+NOBD                                                JM12  21
ISN 0022              NG=NF+NOBD                                                JM12  22
ISN 0023              NH=NG+NOBD                                                JM12  23
ISN 0024              NI=NH+NOBD                                                JM12  24
ISN 0025              NJ=NI+NOBD                                                JM12  25
ISN 0026              NADD=2*(NJ+NOBD)+1                                        JM12  26
ISN 0027              M=NADD-2                                                  JM12  27
ISN 0028              DO 100 I=NA,M                                             JM12  28
ISN 0029          100 X(I+1)=0.                                                 JM12  29
ISN 0030              DO 125 I=1,NOBD                                           JM12  30
ISN 0031          105 READ (5,8010) (COF(J),BCD1(J),BCD2(J),J=1,4)              JM12  31
```

```
ISN 0032      8010 FORMAT(4(D10.5,A4,1X,A1))                                JM12  32
ISN 0033           DO 120 J=1,4                                            JM12  33
ISN 0034           DO 110 K=1,13                                           JM12  34
ISN 0035           IF(BCD1(J).EQ.COFS(K)) GO TO 115                        JM12  35
ISN 0037       110 CONTINUE                                                JM12  36
ISN 0038           WRITE (6,8015) (COF(JJ),BCD1(JJ),BCD2(JJ),JJ=1,J)       JM12  37
ISN 0039      8015 FORMAT(1X,4(E13.5,A4,1X,A1))                            JM12  38
ISN 0040           CALL JOM13(8)                                           JM12  39
ISN 0041       115 IF(K.GT.10) K=K-7                                       JM12  40
ISN 0043           NL=NA+(K-1)*NOBD+I                                      JM12  41
ISN 0044           X(NL)=X(NL)+COF(J)                                      JM12  42
ISN 0045           IF(BCD2(J).NE.BLANK) GO TO 125                          JM12  43
ISN 0047       120 CONTINUE                                                JM12  44
ISN 0048           WRITE (6,8015) (COF(J),BCD1(J),BCD2(J),J=1,4)           JM12  45
ISN 0049           GO TO 105                                               JM12  46
ISN 0050       125 WRITE (6,8015) (COF(JJ),BCD1(JJ),BCD2(JJ),JJ=1,J)       JM12  47
ISN 0051       130 RETURN                                                  JM12  48
ISN 0052              END                                                  JM12  49
```

```
            C     DGNSTK                                                          JM13   1
ISN 0002          SUBROUTINE JOM13(I)                                             JM13   2
ISN 0003          COMMON/GEOMT/TITLE(2)                                           JM13   3
ISN 0004          WRITE (6,8000) TITLE(1),TITLE(2)                                JM13   4
ISN 0005     8000 FORMAT(120H0     *     *     *     *     *     *     *     *     * JM13   5
                 $     *     *     *     *     *     *     *     *     *     *     / JM13   6
                 $6H DEAR ,2A4/86H    WITH THE DEEPEST REGRET I MUST INFORM YOU THAT JM13   7
                 1 A DREADFUL MISFORTUNE HAS OCCURRED.)                          JM13   8
ISN 0006          GO TO (100,105,110,115,120,125,130,135),I                       JM13   9
ISN 0007      100 WRITE (6,8005)                                                  JM13  10
ISN 0008     8005 FORMAT(120H THE PRESENT MEDIUM CANNOT BE DETERMINED.  THE INPUT WA JM13  11
                 $S PROBABLY INCORRECT.  CHECK THIS BLOCK TO SEE IF IT WAS PROPERLY/ JM13  12
                 122H DIVIDED INTO SECTORS.)                                     JM13  13
ISN 0009          GO TO 140                                                       JM13  14
ISN 0010      105 WRITE (6,8010)                                                  JM13  15
ISN 0011     8010 FORMAT(63H YOU HAVE FOOLISHLY ASKED FOR MORE THAN 31 SURFACES IN A JM13  16
                 1 BLOCK.)                                                       JM13  17
ISN 0012          GO TO 145                                                       JM13  18
ISN 0013      110 WRITE (6,8015)                                                  JM13  19
```

```
ISN 0014      8015 FORMAT(120H THE FIRST OR LAST ENTRIES IN A LIST OF BLOCK BOUNDARIE JM13  20
                  $S DOES NOT AGREE WITH THE ZONE BOUNDARIES.  EITHER THE BOUNDARY  / JM13  21
                  $36H LIST OR THE ZONE NUMBERS ARE WRONG.)                           JM13  22
ISN 0015           GO TO 145                                                          JM13  23
ISN 0016       115 WRITE (6,8020)                                                     JM13  24
ISN 0017      8020 FORMAT(14H YOU ARE LOST.)                                          JM13  25
ISN 0018           GO TO 140                                                          JM13  26
ISN 0019       120 WRITE (6,8025)                                                     JM13  27
ISN 0020      8025 FORMAT(56H YOU HAVE FAILED TO MENTION YOUR SEX AND MARITAL STATUS. JM13  28
                  1)                                                                  JM13  29
ISN 0021           GO TO 150                                                          JM13  30
ISN 0022       125 WRITE (6,8030)                                                     JM13  31
ISN 0023      8030 FORMAT(49H THIS BOUNDARY LIST SEEMS TO HAVE ONLY ONE ENTRY.)       JM13  32
ISN 0024           GO TO 145                                                          JM13  33
ISN 0025       130 WRITE (6,8035)                                                     JM13  34
ISN 0026      8035 FORMAT(65H YOU HAVE EITHER MISPELLED A WORD OR YOUR CARDS ARE NOT  JM13  35
                  $IN ORDER.)                                                         JM13  36
ISN 0027           GO TO 145                                                          JM13  37
ISN 0028       135 WRITE (6,8040)                                                     JM13  38
```

```
ISN 0029      8040 FORMAT(40H THIS QUADRATIC FUNCTION IS NOT CORRECT.)      JM13  39
ISN 0030           GO TO 145                                               JM13  40
ISN 0031       140 WRITE (6,8045)                                          JM13  41
ISN 0032      8045 FORMAT(60X,19HRESPECTFULLY YOURS,/60X,4HGEOM)           JM13  42
ISN 0033           CALL EXIT                                               JM13  43
ISN 0034       145 WRITE (6,8045)                                          JM13  44
ISN 0035           CALL ERROR                                              JM13  45
ISN 0036       150 WRITE (6,8045)                                          JM13  46
ISN 0037           RETURN                                                  JM13  47
ISN 0038              END                                                  JM13  48
```

```
ISN 0002          SUBROUTINE JM14                                          JM14   1
ISN 0003          IMPLICIT REAL*8(A-H,O-Z)                                 JM14   2
ISN 0004          INTEGER BLZON,SGNF                                       JM14   3
ISN 0005          REAL*4 DUMMY,DUM2,SGNF2                                  JM14   4
ISN 0006          COMMON N(1)                                              JM14   5
ISN 0007          COMMON/GEOM9/NZ,NBL,NXBL,NYBL,NZBL                       JM14   6
ISN 0008          COMMON/GEOM77/NBOUND,SGNF,NBD2,SGNF2                     JM14   7
ISN 0009          COMMON/JOMIN3/DUMMY(3),NOX,NOY,NOZ,NXBB,NYBB,NZBB,DUM2(12) JM14   8
ISN 0010          COMMON/GEOMC/XTWO,YTWO,ZTWO,X1,Y1,Z1,ETA,ETAUSD,BLZON,IBL, JM14   9
                 2    MARK,NMED,NREG                                      JM14  10
ISN 0011          ENTRY JOM14                                              JM14  11
ISN 0012          SGNF = BLZON                                             JM14  12
ISN 0013          IBLZON = IABS(BLZON)                                     JM14  13
ISN 0014          JBLZON = IBLZON/128                                      JM14  14
ISN 0015          NZ = IBLZON - 128 * JBLZON                               JM14  15
ISN 0016          IBLZON=JBLZON/64                                         JM14  16
ISN 0017          NXBL=JBLZON-64*IBLZON                                    JM14  17
ISN 0018          JBLZON=IBLZON/64                                         JM14  18
ISN 0019          NYBL=IBLZON-64*JBLZON                                    JM14  19
ISN 0020          IBLZON=JBLZON/64                                         JM14  20
ISN 0021          NZBL=JBLZON-64*IBLZON                                    JM14  21
ISN 0022          NBOUND=IBLZON                                            JM14  22
ISN 0023          LNOX = NOX + NZ                                          JM14  23
ISN 0024          LNOY = NOY + NZ                                          JM14  24
ISN 0025          NBL = ((NZBL - 1) * N(LNOY) + NYBL - 1) * N(LNOX) + NXBL JM14  25
ISN 0026          GO TO 100                                                JM14  26
ISN 0027          ENTRY JOM15                                              JM14  27
ISN 0028          BLZON=ISIGN((((NBOUND*64+NZBL)*64+NYBL)*64+NXBL)*128+NZ),SGNF) JM14  28
ISN 0029      100 RETURN                                                   JM14  29
ISN 0030          END                                                      JM14  30
```

```
ISN 0002          FUNCTION JOM16(NADD1)                                          JM16   1
ISN 0003          REAL*8 X,FIN                                                   JM16   2
ISN 0004          DIMENSION X(1),FIN(6),BCD(6)                                   JM16   3
ISN 0005          COMMON X                                                       JM16   4
ISN 0006          COMMON/GEOMH/HMALE,FEMALE,HIT,COMMA,ZONE,BLOCK,MEDIA,SURFAC,   JM16   5
                 $SECTOR,COFS(13),REGION,SIR,HMADAM,HMISS,HMARR,SINGLE           JM16   6
ISN 0007          K=0                                                            JM16   7
ISN 0008          NADD=NADD1                                                     JM16   8
ISN 0009          READ (5,8000) A,B,C,(FIN(I),BCD(I),I=1,5)                      JM16   9
ISN 0010     8000 FORMAT (2A4,A3,5(D10.5,A1))                                    JM16  10
ISN 0011          DO 100 I=1,5                                                   JM16  11
ISN 0012          IF(BCD(I).NE.COMMA) GO TO 120                                  JM16  12
ISN 0014          X(NADD)=FIN(I)                                                 JM16  13
ISN 0015          NADD=NADD+1                                                    JM16  14
ISN 0016      100 K=K+1                                                          JM16  15
ISN 0017          WRITE (6,8005) A,B,C,(FIN(I),BCD(I),I=1,5)                     JM16  16
ISN 0018     8005 FORMAT(1X,2A4,A3,5(E13.5,A1))                                  JM16  17
ISN 0019          K=5                                                            JM16  18
ISN 0020      105 READ (5,8010)(FIN(I),BCD(I),I=1,6)                             JM16  19
ISN 0021     8010 FORMAT (6(D10.5,A1))                                           JM16  20
ISN 0022          DO 110 I=1,6                                                   JM16  21
ISN 0023          IF(BCD(I).NE.COMMA) GO TO 115                                  JM16  22
ISN 0025          X(NADD)=FIN(I)                                                 JM16  23
ISN 0026          NADD=NADD+1                                                    JM16  24
ISN 0027      110 K=K+1                                                          JM16  25
ISN 0028          WRITE (6,8015) (FIN(I),BCD(I),I=1,6)                           JM16  26
ISN 0029     8015 FORMAT(1X,6(E13.5,A1))                                         JM16  27
ISN 0030          GO TO 105                                                      JM16  28
ISN 0031      115 WRITE (6,8015) (FIN(II),BCD(II),II=1,I)                        JM16  29
ISN 0032          GO TO 125                                                      JM16  30
ISN 0033      120 WRITE (6,8005) A,B,C,(FIN(II),BCD(II),II=1,I)                  JM16  31
ISN 0034      125 IF(K.LE.0) CALL JOM13(6)                                       JM16  32
ISN 0036          X(NADD)=FIN(I)                                                 JM16  33
ISN 0037          NADD1=NADD+1                                                   JM16  34
ISN 0038          JOM16=K                                                        JM16  35
ISN 0039          RETURN                                                         JM16  36
ISN 0040             END                                                         JM16  37
```

```
ISN 0002          FUNCTION JOM17(NADD1,NAME1)                                  JM17   1
ISN 0003          DIMENSION N(1),BCD(12),INP(12)                               JM17   2
ISN 0004          COMMON N                                                     JM17   3
ISN 0005          COMMON/GEOMH/HMALE,FEMALE,HIT,COMMA,ZONE,BLOCK,MEDIA,SURFAC, JM17   4
                 $SECTOR,COFS(13),REGION,SIR,HMADAM,HMISS,HMARR,SINGLE         JM17   5
ISN 0006          NADD=NADD1                                                   JM17   6
ISN 0007          READ (5,8000) NAME2,D1,D2,(INP(I),BCD(I),I=1,10)             JM17   7
ISN 0008     8000 FORMAT(3A4,10(I5,A1))                                        JM17   8
ISN 0009          IF(NAME1.EQ.NAME2) GO TO 100                                 JM17   9
ISN 0011          WRITE (6,8005) NAME2,D1,D2                                   JM17  10
ISN 0012     8005 FORMAT(1X,3A4,10(I5,A1))                                     JM17  11
ISN 0013          CALL JOM13(7)                                                JM17  12
ISN 0014      100 N(NADD)=INP(1)                                               JM17  13
ISN 0015          NADD=NADD+1                                                  JM17  14
ISN 0016          DO 105 I=2,10                                                JM17  15
ISN 0017          IF(BCD(I-1).NE.COMMA) GO TO 125                              JM17  16
ISN 0019          N(NADD)=INP(I)                                               JM17  17
ISN 0020      105 NADD=NADD+1                                                  JM17  18
ISN 0021          WRITE (6,8005) NAME2,D1,D2,(INP(I),BCD(I),I=1,10)            JM17  19
ISN 0022          IF(BCD(10).NE.COMMA) GO TO 130                               JM17  20
ISN 0024      110 READ (5,8010) (INP(I),BCD(I),I=1,12)                         JM17  21
ISN 0025     8010 FORMAT(12(I5,A1))                                            JM17  22
ISN 0026          N(NADD)=INP(1)                                               JM17  23
ISN 0027          NADD=NADD+1                                                  JM17  24
ISN 0028          DO 115 I=2,12                                                JM17  25
ISN 0029          IF(BCD(I-1).NE.COMMA) GO TO 120                              JM17  26
ISN 0031          N(NADD)=INP(I)                                               JM17  27
ISN 0032      115 NADD=NADD+1                                                  JM17  28
ISN 0033          WRITE (6,8015) (INP(I),BCD(I),I=1,12)                        JM17  29
ISN 0034     8015 FORMAT(1X,12(I5,A1))                                         JM17  30
ISN 0035          IF(BCD(12)-COMMA) 130,110,130                                JM17  31
ISN 0036      120 WRITE (6,8015) (INP(II-1),BCD(II-1),II=2,I)                  JM17  32
ISN 0037          GO TO 130                                                    JM17  33
ISN 0038      125 WRITE (6,8005) NAME2,D1,D2,(INP(II-1),BCD(II-1),II=2,I)      JM17  34
ISN 0039      130 JOM17=NADD-NADD1                                             JM17  35
ISN 0040          NADD1=NADD                                                   JM17  36
ISN 0041          RETURN                                                       JM17  37
ISN 0042             END                                                       JM17  38
```

APPENDIX E. LISTING OF QAD-P5A(360) WITH LITHIUM HYDRIDE KERNEL

The following pages contain a listing of the subroutine KERNEL for QAD-P5A(360) with a lithium hydride kernel. The complete program contains the following subroutines:

1. Main Program*
2. INPUT*
4. LENGTH*
4. KERNEL - p. 215
5. SOURCE*
6. XSECQD*
7. PRINT*
8. TITLE*
9. SLITE*
10. SLITET*
11. WEIGHT
12. MOMENT (with lithium hydride kernel p.217)
13. XSECO*

*Listings of these subroutines are not included here since they are identical to those listed for QAD-P5A(360).

```
 COMPILER OPTIONS - NAME=  MAIN,OPT=00,LINECNT=50,SOURCE,BCD,NOLIST,DECK,LOAD,MAP,NOEDIT,NOID
ISN 0002            SUBROUTINE  KERNEL                                                  KER-0020
                   1   ( S MAT, X RELL, A NEUT, AW A, A GAM, UA GAM, N ERR )             KER-0030
ISN 0003            DIMENSION   SMAT(20), ANEUT(16,5), AGAM(30), UAGAM(30)              KER-0040
ISN 0004            COMMON/QADNM/ NBMID(18,1), NASET(1),RMXSEC(1),BREAK(1,2),
                   1XNMMC(6,10,1), CONVN(10) , HISTN(10), EN(10) ,FEABSN(10),
                   2WIDTHN(10,2) , WTN(10,3) , UNITN(12), UNITNI(27),UNITND(3),
                   3WIDTHT(2,2)
ISN 0005            COMMON /QADATA/
                   1 NSET  (30)    , RSO  (101)    , PHISO (101)   , ZSO  (101)    ,
                   2 NBNDZN(50)    , NCMPZN(50)    , LBD   (6,50)  , NTRYZN(6,50)  ,
                   3 NEQBD (50)    , ABD   (50)    , BBD   (50)    , CBD   (50)    ,
                   4 XOBD  (50)    , YOBD  (50)    , ZOBD  (50)    , DBD   (50)    ,
                   5 HYDRAT(30)    , XSECN (30)    , XSECG (20,30), BILDO (30)     ,
                   6 BILD1 (30)    , BILD2 (30)    , BILD3 (30)    , GAMEN (30)    ,
                   7 CONV  (30)    , COMP  (20,40), EG    (30)    , MATZ  (20)    ,
                   8 FL    (101)   , FN    (101)   , FM    (101)   , XISO  (2,3)   ,
                   9 ASO   , IU    , RRC    , ZRC   , PHIRC ,ALF1  , ALF2  , ALF3  ,
                   X ALF4  , EPSLN , FUDGE , NBLD ,ID(18)
ISN 0006            EQUIVALENCE  (LSO, NSET(1)), (MSO, NSET(2)), (NSO, NSET(3)),        KER-0300
                   1   (MAT, NSET(4)), (NCOMP, NSET(5)), (NREG, NSET(6)),               KER-0310
                   2   (NRGY, NSET(7)), (NBOUND,NSET(8)), (NS OPT, NSET(9)),            KER-0320
                   3   (ISRC, NSET(11)), (I NEUT, NSET(12))                             KER-0330
ISN 0007            J NEUT = NSET(20)                                                   KER-0510
ISN 0008       100  IF  ( I NEUT )  300,300,200                                         KER-0520
ISN 0009       200  DO  250  L=1,I NEUT                                                 KER-0530
ISN 0010            L NEUT = 0                                                          KER-0540
ISN 0011            TAU = X RELL / RM XSEC(L)                                           KER-0550
ISN 0012            IF  ( TAU - BREAK(L,1) )  240,240,210                               KER-0560
ISN 0013       210  IF  ( TAU - BREAK(L,2) )  220,220,230                               KER-0570
ISN 0014       220  L NEUT = 1                                                          KER-0580
ISN 0015            GO TO  240                                                          KER-0590
ISN 0016       230  L NEUT =2                                                           KER-0600
```

```
ISN 0017      240  DO  250  I=1,J NEUT                                    KER-0610
ISN 0018           N = NA SET(L) * ( I - 1 ) + 1 + L NEUT                KER-0620
ISN 0019           X=0.C
ISN 0020           DO 259 MJ=1,3
ISN 0021           X=X+ (XN MM C(MJ,N,L)/XN MM C(MJ+3,N,L))*EXP (-TAU/SQRT (
                  1XN MM C(MJ+3,N,L)) )
ISN 0022       259 CONTINUE
ISN 0023           ANEUT(I,L) = X*TAU
ISN 0024       250 CONTINUE                                              KER-0670
ISN 0025           S HYD = 0.0                                           KER-0680
ISN 0026           DO  26C  M=1,MAT                                      KER-069C
ISN 0027           S HYD = S HYD + HYDRAT(M) * S MAT(M)                  KER-0700
ISN 0028      260  CONTINUE                                              KER-0710
ISN 0029           S HYD = S HYD / 0.1119                                KER-0720
ISN 0030           IF  ( S HYD )  27C,27C,280                            KER-0730
ISN 0031      270  AW A = ALF1 * EXP( - X RELL )                         KER-0740
ISN 0032           N ERR = N ERR + 1                                     KER-0750
ISN 0033           GO TC  3CC                                            KER-0760
ISN 0034      280  AW A = ALF1 * S HYD ** ALF2 *                         KER-0770
                  1   EXP( C.C669 * S HYD - XRELL - ALF3 * S HYD ** ALF4 )  KER-0780
ISN 0035       300 DO  40C  J=1,NRGY                                     KER-0790
ISN 0036           AG = C.C                                              KER-0800
ISN 0037           DO  35C  I=1,MAT                                      KER-081C
ISN 0038       320 AG=AG+SMAT(I)*XSECG(I,J)                              KER-0820
ISN 0039       350 CONTINUE                                              KER-0830
ISN 0040      360  U GAM = EXP( -AG )                                    KER-0840
ISN 0041      370  GAM = (( BILD3(J) * AG + BILD2(J) ) * AG + BILD1(J) ) * AG  KER-0850
                  1   + BILDC(J)                                         KER-0860
ISN 0042      380  A GAM(J) = UGAM * GAM                                 KER-087C
ISN 0043      390  UA GAM(J) = U GAM                                     KER-0880
ISN 0044      40C  CONTINUE                                              KER-0890
ISN C045      1000 RETURN                                                KER-0900
ISN C046           END                                                   KER-0910
```

```
  COMPILER OPTIONS - NAME=  MAIN,OPT=02,LINECNT=56,SOURCE,BCD,NOLIST,DECK,LOAD,MAP,NOEDIT,NOID
ISN 0002              BLOCK DATA
                C*******************
                C     MOMENT BLOCK DATA
                C*******************
                C
                C*******************
                C     CONTAIN LIH MOMENT SPECTRA DATA
                C*******************
ISN 0003              COMMON/QADNM/ NBMID(18,1), NASET(1),RMXSEC(1),BREAK(1,2),
                     1XNMMC(6,10,1), CONVN(10) , HISTN(10), EN(10) ,FEABSN(10),
                     2WIDTHN(10,2) , WTN(10,3) , UNITN(12), UNITNI(27),UNITND(3),
                     3WIDTHT(2,2)
ISN 0004              DIMENSION X1(6) , X2(6) , X3(6) , X4(6) , X5(6) , X6(6) ,
                     1X7(6) , X8(6) , X9(6) , X10(6)
ISN 0005              EQUIVALENCE (XNMMC(1,1,1),X1) , (XNMMC(1,2,1),X2) ,
                     1  (XNMMC(1,3,1),X3) , (XNMMC(1,4,1),X4) ,
                     2  (XNMMC(1,5,1),X5) , (XNMMC(1,6,1),X6) ,
                     3  (XNMMC(1,7,1),X7) , (XNMMC(1,8,1),X8) ,
                     4  (XNMMC(1,9,1),X9) , (XNMMC(1,10,1),X10)
ISN 0006              EQUIVALENCE  (WIDTHT(2,1),W1)  ,  (WIDTHT(2,2),W2)
ISN 0007              DATA NBMID/4H    ,4H    ,4H    ,4H    ,4HLIH ,4HDATA,4H DKT,        MOM  101
                     1           4H  4-,4H66  ,4H10,8,4H,6,5,4H,4,3,4H,2,1,4H,.67,        MOM  102
                     2           4H,.33,4H MEV,4H    ,4H    /,NASET/1 / ,RMXSEC/0.187/,   MOM  103
                     3           BREAK/10000.0,0.0/                                        MOM  104
ISN 0008              DATA  X1            /1.5574E-4, 3.9919E-3, 3.1305E-3,
                     2                     7.8882E+1, 4.7594E+0, 3.6008E+1 /
ISN 0009              DATA  X2            /2.9793E-4, 1.4875E-2, 1.1189E-2,
                     4                     7.1145E+1, 4.0018E+0, 2.9366E+1 /
ISN 0010              DATA  X3            /6.5803E-4, 6.4820E-2, 4.5273E-2,
                     6                     6.3278E+1, 3.2786E+0, 2.2755E+1 /
ISN 0011              DATA  X4            /1.0674E-3, 1.3474E-1, 9.7436E-2,
                     8                     5.9882E+1, 3.0226E+0, 2.0126E+1 /
ISN 0012              DATA  X5            /1.6179E-3, 2.3834E-1, 1.9346E-1,
                     X                     5.7325E+1, 2.8459E+0, 1.8300E+1 /
```

```
ISN 0013      DATA  X6          /2.7431E-3, 4.5526E-1, 4.3045E-1,
             2                   5.5181E+1, 2.7408E+0, 1.7069E+1 /
ISN 0014      DATA  X7          /4.4618E-3, 8.0642E-1, 8.0253E-1,
             4                   5.3206E+1, 2.7536E+0, 1.6130E+1 /
ISN 0015      DATA  X8          /8.2709E-3, 1.3454E+0, 1.6334E+0,
             6                   5.1610E+1, 3.1683E+0, 1.5477E+1 /
ISN 0016      DATA  X9          /1.0291E-2, 1.5054E+0, 2.1089E+0,
             8                   5.1305E+1, 3.6208E+0, 1.5360E+1 /
ISN 0017      DATA X10           /1.2554E-2,1.9358E+0, 2.7486E+0,
             X                    5.2033E+1,4.7745E+0, 1.5574E+1 /
ISN 0018      DATA CONVN/ 7.0E-9,7.08E-9,6.62E-9,5.80E-9,5.10E-9,4.53E-9,4.15E-9
             1 ,3.80E-9,2.66E-9,1.95E-9 / ,HISTN/ 3.0,2.0,1.5,4*1.0,0.665,0.335,
             2  0.4 / , EN /  10.0,8.0,6.0,5.0, 4.0,3.0, 2.0,1.0,0.67,0.33/
ISN 0019      DATA FEABSN/2.25E-15, 9.27E-16, 5.47E-16, 4.68E-16, 3.80E-16,
             1  3.07E-16, 2.16E-16, 1.04E-16, 8.35E-17, 4.67E-17/,WTN     /
             2  7.47E-14, 6.85E-14, 4.97E-14, 3.94E-14, 3.01E-14, 2.47E-14,
             3  8.24E-15, 5.09E-15, 3.98E-15, 2.86E-15,+6.09E-15, 6.82E-15,
             4  6.12E-15, 7.18E-15, 8.62E-15, 6.44E-15, 4.24E-15, 2.72E-15,
             5  2.10E-15, 1.44E-15,+7.14E-15, 5.00E-15, 3.53E-15, 2.53E-15,
             6  1.82E-15, 1.42E-15, 9.85E-16, 5.57E-16, 4.38E-16, 3.35E-16/
ISN 0020      DATA WIDTHN / 4H12.-,4H9.0-,4H7.0-,4H5.5-,4H4.5-,4H3.5-,4H2.5-,

             1        4H1.5-,4H0.83,4H0.5-,4H9.0 ,4H7.0 ,4H5.5 ,4H4.5 ,4H3.5 ,
             2        4H2.5 ,4H1.5 ,4H.83 ,4H-.5 ,4H.10 /
ISN 0021      DATA UNITN / 4H   R,4HAD  ,4H    ,4H WAT,4HTS P,4HER  ,4H  PE,
             14HR SE,4HC   ,4H   G,4HRAM ,4H    /,UNITND/4H RAD,4H PER,4H SEC/,
             2    UNITNI / 4HHEAT,4HING ,4HRATE,4HHEAT,4HING ,4HRATE,4HHEAT,
             3      4HING ,4HRATE,4HIN B,4HERYL,4HLIUM,4H  IN,4H CAR,4HBON ,
             4      4H IN ,4HALUM,4HINUM,4HWATT,4HS PE,4HR GM,4HWATT,4HS PE,
             5      4HR GM,4HWATT,4HS PE,4HR GM/
ISN 0022      DATA  W1  /4H12.0/
ISN 0023      DATA  W2  /4H-.10/
ISN 0024      RETURN
ISN 0025      END
```

APPENDIX F. LISTING OF QAD-GEOM(360)-CYLINDRICAL

The following is a FORTRAN IV listing of the geometry subroutines for QAD-GEOM(360)-CYLINDRICAL. The complete program contains the following subroutines:

1. Main Program*
2. INPUT*
3. LENGTH*
4. KERNEL*
5. SOURCE*
6. XSECQD*
7. PRINT*
8. TITLE*
9. SLITE*
10. SLITET*
11. GEOM
12. JOMIN
13. LOOKZ
14. JOM4
15. JOM5
16. JOM6
17. JOM7
18. JOM9
19. JOM10
20. MOMENT*
21. XSECO*

*Listing for these subroutines are not included here as they are identical to the ones previously listed for QAD-GEOM(360).

```
COMPILER OPTIONS - NAME=  MAIN,OPT=00,LINECNT=50,SOURCE,EBCDIC,NOLIST,NODECK,LOAD,MAP,NOEDIT,NOID

ISN 0002            IMPLICIT REAL*8(A-H),REAL*8(O-Z)
ISN 0003            SUBROUTINE GEOM                                                    GEOM
ISN 0004            INTEGER * 4 BLZON , BLZ2
              C     MARK=1  FOR COMPLETED PATH
              C         =0  FOR NORMAL BOUNDARY CROSSING
              C         =-1  FOR ESCAPED FROM SYSTEM
              C         =-2  ENTERED INTERIOR VOID
ISN 0005            COMMON/TAPENO/IN1,IN2
ISN 0006            COMMON/GEOMC/XTWO,YTWO,ZTWO,XONE,YONE,ZONE,ETA,
                   1ETAUSD,BLZON,BLZ2,MARK,NMED,NREG
ISN 0007            COMMON/JOMIN1/NORAD,NOHGT,RADIUS(20,20),MED(20,20),HIGHT(20),
                   1HMAX,RMAX,BIG,IVOID,IRAD,IHGT
ISN 0008            COMMON/JOMIN2/NORADG,NOHGTG,RADIUX(20,20),
                   1MEDG(20,20),HIGHTG(20),IRADG,IHGTG,HMAXG,RMAXG,NREGIO
ISN 0009            COMMON/GEOM4/X1,Y1,Z1,X2,Y2,Z2,DIST,NCUE,NCR
ISN 0010            DATA IDUM1 , IDUM2/4032,63/
ISN 0011         51 IF(NMED-1000)50,11,50
ISN 0012      50    IRAD = IAND(BLZON,IDUM1)
ISN 0013            IRAD=IRAD/64
ISN 0014            IHGT = IAND(BLZON,IDUM2)
ISN 0015            NCR=BLZON/4096
ISN 0016         13 X1=XONE
ISN 0017            Y1=YONE
ISN 0018            Z1=ZONE
ISN 0019            X2=XTWO
ISN 0020            Y2=YTWO
ISN 0021            Z2=ZTWO
ISN 0022            DISTD=0.0
ISN 0023          8 DIST=1.0-DISTD
ISN 0024            CALL JOM4
              C     JOM4 IS BOUND          JOM5 IS INTER
ISN 0025            CALL JOM5                                                          GEOM
ISN 0026            IF(NCR)4,4,5
```

```
ISN 0027          5 XTWO=X2
ISN 0028            YTWO=Y2
ISN 0029            ZTWO=Z2
ISN 0030            ETAUSD = ETA*(DIST+DISTD)
ISN 0031            IF(NMED)15,18,15
ISN 0032         15 IF(NMED-1000)17,16,17
ISN 0033         17 MARK=0
ISN 0034            GO TO 103
ISN 0035         18 MARK=-1
ISN 0036            NCR= 0
ISN 0037            GO TO 103
ISN 0038         16 MARK=-2
ISN 0039            GO TO 103
ISN 0040          4 IF(NCUE)70,6,70
ISN 0041         70 CALL JOM10
ISN 0042            IF(NCUE)5,7,5
ISN 0043          7 DISTD=DIST+DISTD
ISN 0044            X1=X2
ISN 0045            Y1=Y2
ISN 0046            Z1=Z2
ISN 0047            X2=XTWO
ISN 0048            Y2=YTWO
ISN 0049            Z2=ZTWO
ISN 0050            GO TO 8
ISN 0051          6 MARK=1
ISN 0052            ETAUSD=ETA
ISN 0053            IF(NREGIO.EQ.1) GO TO 111
ISN 0055            GO TO 103
ISN 0056        111 CALL JOM6(X2,Y2,Z2)
ISN 0057            GO TO 103
ISN 0058        103 BLZON=IRAD*64+IHGT+NCR*4096
ISN 0059        100 IF(IVOID)98,98,99
```

```
ISN 0060          11 S=ABS(XTWO)+ABS(YTWO)+ABS(ZTWO)
ISN 0061             XTWO=XONE+BIG*XTWO/S
ISN 0062             YTWO=YONE+BIG*YTWO/S
ISN 0063             ZTWO=ZONE+BIG*ZTWO/S
ISN 0064             IVOID=1
ISN 0065             GO TO 50
ISN 0066          99 IVOID=0
ISN 0067             ETAUSD=0.0
ISN 0068          98 RETURN
ISN 0069                END
```

```
COMPILER OPTIONS - NAME=  MAIN,OPT=00,LINECNT=50,SOURCE,EBCDIC,NOLIST,NODECK,LOAD,MAP,NOEDIT,NOID
ISN 0002            IMPLICIT REAL*8(A-H),REAL*8(O-Z)
ISN 0003            SUBROUTINE JOMIN(ADDR)
ISN 0004            DIMENSION M(21),RAD(20),ADDR(2)
ISN 0005            DIMENSIONMG(21),RADG(20)
ISN 0006            DIMENSION SEX(2)
ISN 0007            COMMON/TAPEND/IN1,IN2
ISN 0008            COMMON/JOMIN1/NORAD,NOHGT,RADIUS(20,20),MED(20,20),HIGHT(20),
                   1HMAX,RMAX,BIG,IVOID,IRAD,IHGT
ISN 0009            COMMON/JOMIN2/NORADG,NOHGTG,RADIUX(20,20),
                   1MEDG(20,20),HIGHTG(20),IRADG,IHGTG,HMAXG,RMAXG,NREGIO
ISN 0010            IN1 = 6
ISN 0011            IN2 = 5
ISN 0012            WRITE (IN1,411)
ISN 0013        411 FORMAT(1H1,49X,16HCYLINDRICAL GEOM)
ISN 0014        130 FORMAT(1H0,5X,6HHEIGHT)
ISN 0015            READ (IN2,111) NREGIO,(SEX(I),I=1,2)
ISN 0016        111 FORMAT(I5,5X,2A4)
ISN 0017            WRITE (IN1,112) NREGIO,(SEX(I),I=1,2)
ISN 0018        112 FORMAT('0',I5,5X,2A4)
ISN 0019            ADDR(1)=0.0
ISN 0020            NORAD=0
ISN 0021            WRITE (IN1,100)
ISN 0022        100 FORMAT(1H0,5X,5HRADII)
ISN 0023          5 NORAD=NORAD+1
ISN 0024            READ (IN2,105) R
ISN 0025        105 FORMAT(E10.5)
ISN 0026            IF(R)15,15,10
ISN 0027         10 WRITE (IN1,110) R
ISN 0028        110 FORMAT(1H0,E15.5)
ISN 0029            RAD(NORAD) = R*R
ISN 0030            GO TO 5
ISN 0031         15 NORAD=NORAD-1
ISN 0032            IF(NORAD.EQ.21) GO TO 6
ISN 0034            GO TO 7
```

```
ISN 0035          6 WRITE (IN1,117)
ISN 0036        117 FORMAT(1H0,31HNUMBER OF RADII EXCEEDS MAXIMUM,
                   19H ALLOWED.)
ISN 0037            CALL EXIT
ISN 0038          7 IF(NORAD.EQ.1)GO TO 637
ISN 0040            DO20I=2,NORAD
ISN 0041            IF(RAD(I)-RAD(I-1))18,18,20
ISN 0042         18 WRITE (IN1,115) I
ISN 0043        115 FORMAT(1H0,20HRADII ARE NOT GIVEN ,
                   119HIN INCREASING ORDER//1H0,5HERROR,
                   27H AT NO.,I5)
ISN 0044            CALL EXIT
ISN 0045         20 CONTINUE
ISN 0046        637 M(NORAD+1)=-1
ISN 0047            NOHGT=0
ISN 0048        300 WRITE (IN1,301)
ISN 0049        301 FORMAT(1HK,57X,5HMEDIA/1H0,2X,6HHEIGHT,6X,
                   18HRADIUS 1,2X,8HRADIUS 2,2X,8HRADIUS 3,
                   22X,8HRADIUS 4,2X,8HRADIUS 5,2X,8HRADIUS 6,
                   32X,8HRADIUS 7,2X,8HRADIUS 8,2X,8HRADIUS 9,
                   42X,9HRADIUS 10)
ISN 0050         21 NOHGT=NOHGT+1
ISN 0051            READ (IN2,120) H,(M(I),I=1,NORAD)
ISN 0052        120 FORMAT(E10.5,12I5/8I5)
ISN 0053            IF(H)30,30,25
ISN 0054         25 HIGHT(NOHGT)=H
ISN 0055            IF(NORAD.LE.10) GO TO 304
ISN 0057            GO TO 322
ISN 0058        304 WRITE (IN1,305) H,(M(I),I=1,NORAD)
ISN 0059        305 FORMAT(1H0,E11.4,5X,I5,9(5X,I5))
ISN 0060            GO TO 316
```

```
ISN 0061        322 WRITE (IN1,305) H,(M(I),I=1,10)
ISN 0062            WRITE (IN1,321) (M(I),I=11,NORAD)
ISN 0063        321 FORMAT(1H0,16X,I5,9(5X,I5))
ISN 0064        316 IRAD=1
ISN 0065            DO 50 I =1,NORAD
ISN 0066            MED(NOHGT,IRAD) = M(I)
ISN 0067            IF(M(I+1).EQ.M(I)) GO TO 50
ISN 0069         52 RADIUS(NOHGT,IRAD) = RAD(I)
ISN 0070            IRAD = IRAD+1
ISN 0071         50 CONTINUE
ISN 0072            GO TO 21
ISN 0073         30 NOHGT=NOHGT-1
ISN 0074            IF(NOHGT.EQ.21) GO TO 350
ISN 0076        349 IF(NOHGT.EQ.0) GO TO 31
ISN 0078            GO TO 33
ISN 0079        350 WRITE (IN1,405)
ISN 0080        405 FORMAT(1H0,29HTHE NUMBER OF HEIGHTS EXCEEDS,
                   128H THE MAXIMUM NUMBER ALLOWED.)
ISN 0081            CALL EXIT
ISN 0082         31 WRITE (IN1,32)
ISN 0083         32 FORMAT(1H0,25HFIRST HEIGHT IS INCORRECT)
ISN 0084            CALL EXIT
ISN 0085         33 IF(NOHGT.EQ.1) GO TO 41
ISN 0087            DO35I=2,NOHGT
ISN 0088            IF(HIGHT(I)-HIGHT(I-1))38,38,35
ISN 0089         35 CONTINUE
ISN 0090            GO TO 41
ISN 0091         38 WRITE (IN1,39)
ISN 0092         39 FORMAT(1H0,25HHEIGHTS ARE NOT GIVEN IN ,
                  116HINCREASING ORDER)
ISN 0093            CALL EXIT
ISN 0094         41 HMAX=HIGHT(NOHGT)
ISN 0095            RMAX = RAD(NORAD)
ISN 0096            BIG = 3.0*SQRT(HMAX**2+4*RMAX)
ISN 0097            IVOID = 0
ISN 0098            NCR = 0
ISN 0099            IF(NREGIO.EQ.1) GO TO 55
```

```
ISN 0101          45 NREG=1
ISN 0102             RETURN
ISN 0103          55 WRITE (IN1,199)
ISN 0104         199 FORMAT(1H2,15HREGION GEOMETRY)
ISN 0105             NORADG=0
ISN 0106             WRITE (IN1,200)
ISN 0107         200 FORMAT(1HK,5X,5HRADII)
ISN 0108         205 NORADG=NORADG+1
ISN 0109             READ (IN2,105) RG
ISN 0110             IF(RG)215,215,210
ISN 0111         210 WRITE (IN1,110) RG
ISN 0112             RADG(NORADG)=RG*RG
ISN 0113             GO TO 205
ISN 0114         215 NORADG=NORADG-1
ISN 0115             DO220I=2,NORADG
ISN 0116             IF(RADG(I)-RADG(I-1))218,218,220
ISN 0117         218 WRITE (IN1,115) I
ISN 0118             CALL EXIT
ISN 0119         220 CONTINUE
ISN 0120             WRITE (IN1,130)
ISN 0121             MG(NORADG+1)=-1
ISN 0122             NOHGTG=0
ISN 0123         221 NOHGTG=NOHGTG+1
ISN 0124             READ (IN2,120) HG,(MG(I),I=1,NORADG)
ISN 0125             IF(HG)230,230,225
ISN 0126         225 HIGHTG(NOHGTG)=HG
ISN 0127             WRITE (IN1,140) HG,(MG(I),I=1,NORADG)
ISN 0128         140 FORMAT(1H0,E11.4,20I5)
ISN 0129             IRADG=1
ISN 0130             DO250I=1,NORADG
ISN 0131             MEDG(NOHGTG,IRADG)=MG(I)
ISN 0132             IF(MG(I+1).EQ.MG(I)) GO TO 250
```

```
ISN 0134        252 RADIUX(NOHGTG,IRADG) = RADG(I)
ISN 0135            IRADG=IRADG+1
ISN 0136        250 CONTINUE
ISN 0137            GO TO 221
ISN 0138        230 NOHGTG=NOHGTG-1
ISN 0139            IF(NOHGTG.EQ.0) GO TO 231
ISN 0141            GO TO 233
ISN 0142        231 WRITE (IN1,32)
ISN 0143            CALL EXIT
ISN 0144        233 DO235I=2,NOHGTG
ISN 0145            IF(HIGHTG(I)-HIGHTG(I-1))238,238,235
ISN 0146        235 CONTINUE
ISN 0147            GO TO 241
ISN 0148        238 WRITE (IN1,39)
ISN 0149            CALL EXIT
ISN 0150        241 HMAXG=HIGHTG(NOHGTG)
ISN 0151            RMAXG=RADG(NORADG)
ISN 0152            RETURN
ISN 0153            END
```

```
COMPILER OPTIONS - NAME=  MAIN,OPT=00,LINECNT=50,SOURCE,EBCDIC,NOLIST,NODECK,LOAD,MAP,NOEDIT,NOID

      ISN 0002            IMPLICIT REAL*8(A-H),REAL*8(O-Z)
      ISN 0003            SUBROUTINE LOOKZ(X,Y,Z)
      ISN 0004            INTEGER * 4 BLZON , BLZ2
      ISN 0005            COMMON/TAPENO/IN1,IN2
      ISN 0006            COMMON/JOMIN1/NORAD,NOHGT,RADIUS(20,20),MED(20,20),HIGHT(20),
                         1HMAX,RMAX,BIG,IVOID,IRAD,IHGT
      ISN 0007            COMMON/GEOMC/XTWO,YTWO,ZTWO,XONE,YONE,ZONE,ETA,
                         1ETAUSD,BLZON,BLZ2,MARK,NMED,NREG
      ISN 0008            COMMON/JOMIN2/NORADG,NOHGTG,RADIUX(20,20),
                         1MEDG(20,20),HIGHTG(20),IRADG,IHGTG,HMAXG,RMAXG,NREGIO
      ISN 0009            NREG=1
      ISN 0010            IF(Z)25,30,30
      ISN 0011         25 WRITE (IN1,100) Z
      ISN 0012        100 FORMAT(1H0,13HYOU ARE LOST.,4HZ2 =,E15.4)
      ISN 0013            Z=0.0
      ISN 0014         30 DO 35 IHGT=1,NOHGT
      ISN 0015            IF(Z-HIGHT(IHGT))40,40,35
      ISN 0016         35 CONTINUE
      ISN 0017            WRITE (IN1,100) Z
      ISN 0018            CALL ERROR
      ISN 0019         40 CALL JOM9(X,Y)
      ISN 0020            BLZON=64*IRAD+IHGT
      ISN 0021            IF(NREGIO.EQ.1) GO TO 44
      ISN 0023            GO TO 45
      ISN 0024         44 CALL JOM6(X,Y,Z)
      ISN 0025         45 RETURN
      ISN 0026            END
```

```
COMPILER OPTIONS - NAME=  MAIN,OPT=00,LINECNT=50,SOURCE,EBCDIC,NOLIST,NODECK,LOAD,MAP,NOEDIT,NOID

      ISN 0002            IMPLICIT REAL*8(A-H),REAL*8(O-Z)
      ISN 0003            SUBROUTINE JOM4
      ISN 0004            INTEGER * 4 BLZON , BLZ2
      ISN 0005            COMMON/TAPENO/IN1,IN2
      ISN 0006            COMMON/GEOMC/XTWO,YTWO,ZTWO,XONE,YONE,ZONE,ETA,
                         1ETAUSD,BLZON,BLZ2,MARK,NMED,NREG
      ISN 0007            COMMON/GEOM4/X1,Y1,Z1,X2,Y2,Z2,DIST,NCUE,NCR
      ISN 0008            COMMON/JOMIN1/NORAD,NOHGT,RADIUS(20,20),MED(20,20),HIGHT(20),
                         1HMAX,RMAX,BIG,IVOID,IRAD,IHGT
      ISN 0009            W=Z2-Z1
      ISN 0010            IF(W)1,13,3
      ISN 0011          1 IF(IHGT-1)10,10,11
      ISN 0012         10 IF(Z2)12,13,13
      ISN 0013         12 Z2=0.
      ISN 0014            NCUE=-1
      ISN 0015            GO TO 100
      ISN 0016         11 IF(Z2-HIGHT(IHGT-1))14,13,13
      ISN 0017         14 Z2=HIGHT(IHGT-1)
      ISN 0018            NCUE=-1
      ISN 0019            GO TO 100
      ISN 0020          3 IF(Z2-HIGHT(IHGT))13,13,31
      ISN 0021         31 Z2=HIGHT(IHGT)
      ISN 0022            NCUE=1
      ISN 0023        100 RHO=(Z2-Z1)/W
      ISN 0024            X2=X1+(X2-X1)*RHO
      ISN 0025            Y2=Y1+(Y2-Y1)*RHO
      ISN 0026            DIST=DIST*RHO
      ISN 0027            RETURN
      ISN 0028         13 NCUE=0
      ISN 0029            RETURN
      ISN 0030            END
```

```
COMPILER OPTIONS - NAME=  MAIN,OPT=00,LINECNT=50,SOURCE,EBCDIC,NOLIST,NODECK,LOAD,MAP,NOEDIT,NOID

ISN 0002            IMPLICIT REAL*8(A-H),REAL*8(O-Z)
ISN 0003            SUBROUTINE JOM5
ISN 0004            INTEGER * 4 BLZON , BLZ2
ISN 0005            COMMON/TAPENO/IN1,IN2
ISN 0006            COMMON/GEOMC/XTWO,YTWO,ZTWO,XONE,YONE,ZONE,ETA,
                   1ETAUSD,BLZON,BLZ2,MARK,NMED,NREG
ISN 0007            COMMON/GEOM4/X1,Y1,Z1,X2,Y2,Z2,DIST,NCUE,NCR
ISN 0008            COMMON/JOMIN1/NORAD,NOHGT,RADIUS(20,20),MED(20,20),HIGHT(20),
                   1HMAX,RMAX,BIG,IVOID,IRAD,IHGT
ISN 0009            RSQ=X1**2+Y1**2
ISN 0010            U=X2-X1
ISN 0011            V=Y2-Y1
ISN 0012            P=U*U+V*V
ISN 0013            IF(P)500,13,500
ISN 0014      500   Q=U*X1+V*Y1
ISN 0015            IF(Q)1,1,2
ISN 0016          1 IF(IRAD-1)22,22,10
ISN 0017         10 DISCR=Q*Q-P*(RSQ-RADIUS(IHGT,IRAD-1))
ISN 0018            IF(DISCR)22,22,11
ISN 0019         11 RHO = (-Q-SQRT(DISCR))/P
ISN 0020            IF(RHO-1.)12,13,13
ISN 0021         12 IRAD=IRAD-1
ISN 0022        100 NMED=MED(IHGT,IRAD)
ISN 0023        101 X2=X1+RHO*U
ISN 0024            Y2=Y1+RHO*V
ISN 0025            Z2=Z1+RHO*(Z2-Z1)
ISN 0026            NCR=1
ISN 0027            DIST=DIST*RHO
ISN 0028            RETURN
```

```
ISN 0029        22 IF(NCR.EQ.1) GO TO 23
ISN 0031           GO TO 2
ISN 0032        23 RHO=((-2.)*Q)/P
ISN 0033           IF(RHO-1.)24,13,13
ISN 0034        24 IF(RADIUS(IHGT,IRAD).LT.RMAX) GO TO 25
ISN 0036           GO TO 26
ISN 0037        25 IRAD=IRAD+1
ISN 0038           GO TO 100
ISN 0039        26 NMED=0
ISN 0040           GO TO 101
ISN 0041         2 DISCR=Q*Q-P*(RSQ-RADIUS(IHGT,IRAD))
ISN 0042           RHO = ((-Q)+SQRT(DISCR))/P
ISN 0043           IF(RHO-1.)34,13,13
ISN 0044        34 IF(RHO)13,13,24
ISN 0045        13 NCR=0
ISN 0046           RETURN
ISN 0047           END
```

```
COMPILER OPTIONS - NAME=  MAIN,OPT=0C,LINECNT=50,SOURCE,EBCDIC,NOLIST,NODECK,LOAD,MAP,NOEDIT,NOID

ISN 0002            IMPLICIT REAL*8(A-H),REAL*8(O-Z)
ISN 0003            SUBROUTINE JOM6(X2,Y2,Z2)
ISN 0004            COMMON/TAPENO/IN1,IN2
ISN 0005            COMMON/JOMIN2/NORADG,NOHGTG,RADIUX(20,20),
                   1MEDG(20,20),HIGHTG(20),IRADG,IHGTG,HMAXG,RMAXG,NREGIO
ISN 0006            IF(Z2)25,30,30
ISN 0007         25 WRITE (IN1,100) Z2
ISN 0008        100 FORMAT(1H0,24HYOU ARE LOST REGIONWISE.,4X,4HZ2 =,E15.4)
ISN 0009            CALL EXIT
ISN 0010         30 DO35IHGTG=1,NOHGTG
ISN 0011            IF(Z2-HIGHTG(IHGTG))40,40,35
ISN 0012         35 CONTINUE
ISN 0013            WRITE (IN1,100) Z2
ISN 0014            CALL EXIT
ISN 0015         40 CALL JOM7(X2,Y2)
ISN 0016         45 RETURN
ISN 0017            END
```

```
COMPILER OPTIONS - NAME=  MAIN,OPT=00,LINECNT=50,SOURCE,EBCDIC,NOLIST,NODECK,LOAD,MAP,NOEDIT,NOID

          ISN 0002          IMPLICIT REAL*8(A-H),REAL*8(O-Z)
          ISN 0003          SUBROUTINE JOM7(X,Y)
          ISN 0004          INTEGER * 4 BLZON , BLZ2
          ISN 0005          COMMON/TAPENO/IN1,IN2
          ISN 0006          COMMON/GEOMC/XTWO,YTWO,ZTWO,XONE,YONE,ZONE,ETA,
                           1ETAUSD,BLZON,BLZ2,MARK,NMED,NREG
          ISN 0007          COMMON/JOMIN2/NORADG,NOHGTG,RADIUX(20,20),
                           1MEDG(20,20),HIGHTG(20),IRADG,IHGTG,HMAXG,RMAXG,NREGIO
          ISN 0008          R=X*X+Y*Y
          ISN 0009          IF(R.LE.RMAXG) GO TO 1
          ISN 0011        2 WRITE (IN1,50) R
          ISN 0012       50 FORMAT(1H0,24HYOU ARE LOST REGIONWISE.,4X,5HRSQ =,E15.4)
          ISN 0013          CALL ERROR
          ISN 0014        1 IRADG=1
          ISN 0015        5 IF(R.LE.RADIUX(IHGTG,IRADG)) GO TO 3
          ISN 0017        4 IRADG=IRADG+1
          ISN 0018          GO TO 5
          ISN 0019        3 NREG=MEDG(IHGTG,IRADG)
          ISN 0020          RETURN
          ISN 0021          END
```

```
COMPILER OPTIONS - NAME=  MAIN,OPT=00,LINECNT=50,SOURCE,EBCDIC,NOLIST,NODECK,LOAD,MAP,NOEDIT,NOID

ISN 0002            IMPLICIT REAL*8(A-H),REAL*8(O-Z)
ISN 0003            SUBROUTINE JOM9(X,Y)
ISN 0004            INTEGER * 4 BLZON , BLZ2
ISN 0005            COMMON/TAPENO/IN1,IN2
ISN 0006            COMMON/GEOMC/XTWO,YTWO,ZTWO,XONE,YONE,ZONE,ETA,
                   1ETAUSD,BLZON,BLZ2,MARK,NMED,NREG
ISN 0007            COMMON/JOMIN1/NORAD,NOHGT,RADIUS(20,20),MED(20,20),HIGHT(20),
                   1HMAX,RMAX,BIG,IVOID,IRAD,IHGT
ISN 0008            R=X*X+Y*Y
ISN 0009            IF(R.LE.RMAX) GO TO 1
ISN 0011          2 WRITE (IN1,50) R
ISN 0012         50 FORMAT(1H0,13HYOU ARE LOST.,5HRSQ =,E15.4)
ISN 0013            CALL ERROR
ISN 0014          1 IRAD=1
ISN 0015          5 IF(R.LE.RADIUS(IHGT,IRAD)) GO TO 3
ISN 0017          4 IRAD=IRAD+1
ISN 0018            GO TO 5
ISN 0019          3 NMED=MED(IHGT,IRAD)
ISN 0020            RETURN
ISN 0021            END
```

```
COMPILER OPTIONS - NAME=  MAIN,OPT=00,LINECNT=50,SOURCE,EBCDIC,NOLIST,NODECK,LOAD,MAP,NOEDIT,NOID

      ISN 0002            IMPLICIT REAL*8(A-H),REAL*8(O-Z)
      ISN 0003            SUBROUTINE JOM10
      ISN 0004            INTEGER * 4 BLZON , BLZ2
      ISN 0005            COMMON/TAPENO/IN1,IN2
      ISN 0006            COMMON/GEOM4/X1,Y1,Z1,X2,Y2,Z2,DIST,NCUE,NCR
      ISN 0007            COMMON/GEOMC/XTWO,YTWO,ZTWO,XONE,YONE,ZONE,ETA,
                         1ETAUSD,BLZON,BLZ2,MARK,NMED,NREG
      ISN 0008            COMMON/JOMIN1/NORAD,NOHGT,RADIUS(20,20),MED(20,20),HIGHT(20),
                         1HMAX,RMAX,BIG,IVOID,IRAD,IHGT
      ISN 0009            IHGT=IHGT+NCUE
      ISN 0010            IF(IHGT-NOHGT)11,11,13
      ISN 0011         11 IF(IHGT)13,13,12
      ISN 0012         12 CONTINUE
      ISN 0013            OLDMED=NMED
      ISN 0014            CALL JOM9(X2,Y2)
      ISN 0015            IF(NMED.EQ.OLDMED) GO TO 1
      ISN 0017            GO TO 2
      ISN 0018          1 NCUE=0
      ISN 0019          2 RETURN
      ISN 0020         13 NMED = 0
      ISN 0021            RETURN
      ISN 0022            END
```

APPENDIX G. LISTING OF QAD-GEOM(360)-SPHERICAL

The following is a FORTRAN IV listing of the geometry subroutines for QAD-GEOM(360)-SPHERICAL. The complete program contains the following subroutines:

1. Main Program*
2. INPUT*
3. LENGTH*
4. KERNEL*
5. SOURCE*
6. XSECQD*
7. PRINT*
8. TITLE*
9. SLITE*
10. SLITET*
11. GEOM, p. 237
12. JOMIN, p. 239
13. LOOKZ, p. 241
14. MOMENT*
15. XSECO*

*Listing for these subroutines are not included here as they are identical to the ones previously listed for QAD-GEOM(360).

```
COMPILER OPTIONS - NAME=  MAIN,OPT=00,LINECNT=50,SOURCE,EBCDIC,NOLIST,NODECK,LOAD,MAP,NOEDIT,NOID

      ISN 0002            SUBROUTINE GEOM
      ISN 0003            IMPLICIT REAL*8(A-H),REAL*8(O-Z)
      ISN 0004            COMMON/GEOMC/X2,Y2,Z2,X1,Y1,Z1,ETA,ETAUSD,IBLZ,IBLD,MARK,NMED,
                         1NREG
      ISN 0005            COMMON/JOMIX/DMAX,RADSQ(20),REGRSQ(20),MAXMED,MAXREG,IVOID,
                         1MEDIA(20)
      ISN 0006            RSQ=X1*X1+Y1*Y1+Z1*Z1
      ISN 0007            IF(NMED-1000)1,2,1
      ISN 0008          1 U=X2-X1
      ISN 0009            V=Y2-Y1
      ISN 0010            W=Z2-Z1
      ISN 0011          6 P=U*U+V*V+W*W
      ISN 0012            Q=U*X1+V*Y1+W*Z1
      ISN 0013            IF(Q)4,5,5
      ISN 0014          4 IF(IBLZ-1)5,5,3
      ISN 0015          3 F1=RSQ-RADSQ(IBLZ-1)
      ISN 0016            DISCR=Q*Q-P*F1
      ISN 0017            IF(DISCR)5,5,11
      ISN 0018         11 DIST=(-Q-SQRT (DISCR))/P
      ISN 0019            IF(DIST-1.)12,5,5
      ISN 0020         12 IBLZ=IBLZ-1
      ISN 0021            NMED=MEDIA(IBLZ)
      ISN 0022            GO TO 70
      ISN 0023          5 IF(MARK)14,14,13
      ISN 0024         13 F1=RSQ-RADSQ(IBLZ)
      ISN 0025            DISCR=Q*Q-P*F1
      ISN 0026            DIST=(-Q+SQRT (DISCR))/P
      ISN 0027         19 IF(DIST-1.)15,16,16
      ISN 0028         15 IF(IBLZ-MAXMED)25,26,26
      ISN 0029         25 NMED=MEDIA(IBLZ+1)
      ISN 0030            GO TO 70
      ISN 0031         26 MARK=-1
      ISN 0032            NMED=0
      ISN 0033            GO TO 71
```

```
ISN 0034        14 IF(Q)17,18,18
ISN 0035        18 IBLZ=IBLZ+1
ISN 0036           GO TO 13
ISN 0037        17 DIST=-2.*Q/P
ISN 0038           GO TO 19
ISN 0039        70 IF(NMED-1000)72,73,72
ISN 0040        73 MARK=-2
ISN 0041           GO TO 71
ISN 0042        72 MARK=0
ISN 0043        71 X2=U*DIST+X1
ISN 0044           Y2=V*DIST+Y1
ISN 0045           Z2=W*DIST+Z1
ISN 0046           IF(IVOID)74,74,75
ISN 0047        75 ETAUSD=0
ISN 0048           IVOID=0

ISN 0049           RETURN
ISN 0050        74 ETAUSD=ETA*DIST
ISN 0051           RETURN
ISN 0052        16 MARK=1
ISN 0053           ETAUSD=ETA
ISN 0054           IF(MAXREG)103,103,104
ISN 0055       103 NREG=1
ISN 0056           RETURN
ISN 0057       104 R2SQ=X2*X2+Y2*Y2+Z2*Z2
ISN 0058           DO 101 NREG=1,MAXREG
ISN 0059           IF(REGRSQ(NREG)-R2SQ)101,102,102
ISN 0060       101 CONTINUE
ISN 0061           NREG=MAXREG
ISN 0062       102 RETURN
ISN 0063         2 S=ABS (X2)+ABS (Y2)+ABS (Z2)
ISN 0064           D=DMAX/S
ISN 0065           U=X2*D
ISN 0066           V=Y2*D
ISN 0067           W=Z2*D
ISN 0068           IVOID=1
ISN 0069           GO TO 6
ISN 0070           END
```

```
COMPILER OPTIONS - NAME=  MAIN,OPT=00,LINECNT=50,SOURCE,EBCDIC,NOLIST,NODECK,LOAD,MAP,NOEDIT,NOID

      ISN 0002          SUBROUTINE JOMIN(NADD)
      ISN 0003          IMPLICIT REAL*8(A-H),REAL*8(O-Z)
      ISN 0004          COMMON/JOMIX/DMAX,RADSQ(20),REGRSQ(20),MAXMED,MAXREG,IVOID,
                       1MEDIA(20)
      ISN 0005          COMMON/TAPENO/IN1,IN2
      ISN 0006          IN1 = 6
      ISN 0007          IN2 = 5
      ISN 0008          NADD=0
      ISN 0009          IVOID=0
      ISN 0010          MAXMED=0
      ISN 0011          WRITE (IN1,10)
      ISN 0012       10 FORMAT(15H1SPHERICAL GEOM/18H0 MEDIUM    RADIUS)
      ISN 0013        4 READ(IN2,1)MED,R
      ISN 0014        1 FORMAT(I5,E10.5)
      ISN 0015          IF(MED)2,2,3
      ISN 0016        3 WRITE(IN1,11)MED,R
      ISN 0017       11 FORMAT(1H ,I5,E15.5)
      ISN 0018          MAXMED=MAXMED+1
      ISN 0019          RADSQ(MAXMED)=R*R
      ISN 0020          MEDIA(MAXMED)=MED
      ISN 0021          DMAX=6.*R
      ISN 0022          GO TO 4
      ISN 0023        2 CONTINUE
      ISN 0024          WRITE(IN1,12)
      ISN 0025       12 FORMAT(18H0 REGION    RADIUS)
      ISN 0026          MAXREG=0
      ISN 0027        5 READ(IN2,6)R
      ISN 0028        6 FORMAT(E10.5)
```

```
ISN 0029          IF(R)7,7,8
ISN 0030        8 MAXREG=MAXREG+1
ISN 0031          REGRSQ(MAXREG)=R*R
ISN 0032          WRITE(IN1,11)MAXREG,R
ISN 0033          GO TO 5
ISN 0034        7 IF(MAXREG)91,91,9
ISN 0035       91 WRITE(IN1,13)
ISN 0036       13 FORMAT(19HONO REGION GEOMETRY)
ISN 0037        9 RETURN
ISN 0038          END
```

```
COMPILER OPTIONS - NAME=  MAIN,OPT=00,LINECNT=50,SOURCE,EBCDIC,NOLIST,NODECK,LOAD,MAP,NOEDIT,NOID
      ISN 0002              SUBROUTINE LOOKZ(X,Y,Z)
      ISN 0003              IMPLICIT REAL*8(A-H),REAL*8(O-Z)
      ISN 0004              COMMON/TAPENO/IN1,IN2
      ISN 0005              COMMON/GEOMC/X2,Y2,Z2,X1,Y1,Z1,ETA,ETAUSD,IBLZ,IBLD,MARK,NMED,
                           1NREG
      ISN 0006              COMMON/JOMIX/DMAX,RADSQ(20),REGRSQ(20),MAXMED,MAXREG,IVOID,
                           1MEDIA(20)
      ISN 0007              RSQ=X*X+Y*Y+Z*Z
      ISN 0008              DO 1 IBLZ=1,MAXMED
      ISN 0009              IF(RSQ-RADSQ(IBLZ))2,2,1
      ISN 0010            1 CONTINUE
      ISN 0011              WRITE(IN1,10)
      ISN 0012           10 FORMAT(60H0YOU OAF, YOU HAVE PICKED A SOURCE POINT OUTSIDE THE SYS
                           1TEM.)
      ISN 0013              CALL ERROR
      ISN 0014            2 NMED=MEDIA(IBLZ)
      ISN 0015              IF(MAXREG)5,5,6
      ISN 0016            5 NREG=1
      ISN 0017              RETURN
      ISN 0018            6 DO 3 NREG=1,MAXREG
      ISN 0019              IF(RSQ-REGRSQ(NREG))4,4,3
      ISN 0020            3 CONTINUE
      ISN 0021              NREG=MAXREG
      ISN 0022        4     RETURN
      ISN 0023              END
```

ORNL-4181
UC-32 — Mathematics and Computers

INTERNAL DISTRIBUTION

1. Biology Library
2-4. Central Research Library
5-6. ORNL — Y-12 Technical Library Document Reference Section
7-26. Laboratory Records Department
27. Laboratory Records, ORNL R.C.
28. L. S. Abbott
29. H. R. Brashear
30. C. E. Clifford
31. H. E. Francis
32. W. H. Jordan
33. R. C. Kryter
34. C. E. Larson
35. H. G. MacPherson
36-37. F. C. Maienschein
38. B. F. Maskewitz
39. J. P. Nichols
40. G. L. Ragan
41. M. J. Skinner
42. J. W. Snider
43-47. E. Solomito
48-52. J. Stockton
53. J. G. Sullivan
54. D. A. Sundberg
55. D. R. Vondy
56. A. M. Weinberg
57. E. R. Cohen (consultant)
58. B. C. Diven (consultant)
59. W. N. Hess (consultant)
60. M. H. Kalos (consultant)
61. L. V. Spencer (consultant)

EXTERNAL DISTRIBUTION

62. P. B. Hemmig, Division of Reactor Development and Technology, U.S. Atomic Energy Commission, Washington, D.C.
63. I. F. Zartman, Division of Reactor Development and Technology, U.S. Atomic Energy Commission, Washington, D.C.
64. C. P. McCallum, Division of Space Nuclear Systems, U.S. Atomic Energy Commission, Washington, D.C.
65. H. Goldstein, Columbia University, New York, N.Y.
66. J. A. Swartout, Union Carbide Corporation, New York, N.Y.
67. Laboratory and University Division, AEC, ORO
68-358. Given distribution as shown in TID-4500 under Mathematics and Computers category (25 copies — CFSTI)