LOCKHEED MARTIN ENERGY RESEARCH LIBRARIES
3 4456 0513158 6

CENTRAL RESEARCH LIBRARY
DOCUMENT COLLECTION

OAK RIDGE NATIONAL LABORATORY
operated by
UNION CARBIDE CORPORATION
NUCLEAR DIVISION
for the
U.S. ATOMIC ENERGY COMMISSION

ORNL - TM - 2358
'70

A DIFFUSION PROCESS FOR REMOVING TRITIUM FROM THE BLANKET OF A THERMONUCLEAR REACTOR

OAK RIDGE NATIONAL LABORATORY
CENTRAL RESEARCH LIBRARY
DOCUMENT COLLECTION
LIBRARY LOAN COPY
DO NOT TRANSFER TO ANOTHER PERSON
If you wish someone else to see this document, send in name with document and the library will arrange a loan.
UCN-7969
(3 3-67)

NOTICE This document contains information of a preliminary nature and was prepared primarily for internal use at the Oak Ridge National Laboratory. It is subject to revision or correction and therefore does not represent a final report.

LEGAL NOTICE

This report was prepared as an account of Government sponsored work. Neither the United States, nor the Commission, nor any person acting on behalf of the Commission:

A. Makes any warranty or representation, expressed or implied, with respect to the accuracy, completeness, or usefulness of the information contained in this report, or that the use of any information, apparatus, method, or process disclosed in this report may not infringe privately owned rights; or

B. Assumes any liabilities with respect to the use of, or for damages resulting from the use of any information, apparatus, method, or process disclosed in this report.

As used in the above, "person acting on behalf of the Commission" includes any employee or contractor of the Commission, or employee of such contractor, to the extent that such employee or contractor of the Commission, or employee of such contractor prepares, disseminates, or provides access to, any information pursuant to his employment or contract with the Commission, or his employment with such contractor.

ORNL-TM-2358

Contract No. W-7405-eng-26

A DIFFUSION PROCESS FOR REMOVING TRITIUM FROM THE BLANKET OF A THERMONUCLEAR REACTOR

A. P. Fraas

DECEMBER 1968

OAK RIDGE NATIONAL LABORATORY
Oak Ridge, Tennessee
operated by
UNION CARBIDE CORPORATION
for the
U.S. ATOMIC ENERGY COMMISSION

LOCKHEED MARTIN ENERGY RESEARCH LIBRARIES

3 4456 0513158 6

CONTENTS

	Page
Abstract	1
Introduction	1
Description of the Proposed System	3
Summary of Solubility and Diffusion Data	4
Permeation Constant	5
Activation Energy	5
Effects of Gas Pressure	5
Effects of Atomic Weight of the Gas	5
Solubility Data	6
Analysis	6
Tritium Permeation Through Tube Walls	7
Tritium Inventory	9
Vacuum Pump Capacity	10
Summary	10
Acknowledgements	12
References	13

A DIFFUSION PROCESS FOR REMOVING TRITIUM FROM THE BLANKET OF A THERMONUCLEAR REACTOR

Abstract

The tritium concentration in the blanket of a thermonuclear reactor is important both from the standpoint of its effect on the capital investment required and from the standpoint of possible embrittlement of the structural material. Thus, the size and cost of the system required to keep the tritium concentration to an acceptable level is important from the feasibility standpoint.

The high diffusion coefficient for hydrogen diffusing through niobium makes it possible to design a tritium removal system for the thermonuclear reactors evolved in the study covered by ORNL-TM-2204. The proposed system entails tritium diffusion from the lithium of the blanket as it circulates through the main heat exchangers built of niobium. These would be operated at about 1800°F and be used to boil potassium for a potassium vapor topping cycle. A stainless steel potassium condenser operating at about 1100°F would serve not only as the boiler for a steam cycle but it would also be designed to concentrate the tritium which would be drawn off as a noncondensable. The incremental cost of the resulting tritium removal system designed to hold the tritium inventory to about 10 kg in a 5000 Mw(t) plant appears to be modest – roughly $4,000,000.

Introduction

The solubility of tritium in the metallic lithium (or the lithium-beryllium fluoride) used as the fertile material for breeding tritium from the neutrons thermalized in the reflector region raises a number of serious questions. Of these perhaps the most important are the size of the tritium inventory and the extent to which the tritium will diffuse into the niobium structure and possibly cause it to become brittle. In the vacuum wall this problem will be aggravated by deposition of high energy neutral atoms of deuterium and tritium that leak from the plasma.

An indication of the magnitude of the tritium inventory problem is given by considering the 10 m diameter, cylindrical, 5000 Mw reactor of Ref. 1, p. A-20 for which it was estimated that there would be about 1 kg of tritium generated per day for a thermal power output of about 5000 Mw

and a lithium inventory of about 50,000 kg.[1] The cost of the tritium required to get the first thermonuclear plant started will be about $1,000,000/kg (assuming that the cost is primarily for neutrons and that the cost of these will be the same as for making plutonium that will sell for $10/lb). If it is assumed just for a first appraisal that the tritium in the lithium will run 1 mol %, the tritium inventory in the lithium will amount to approximately 220 kg and will have a value of about $220,000,000. This represents a major capital investment, although once the reactor had operated for awhile the price of tritium would fall to much less than the $1,000,000/kg assumed here. The extent to which the price will drop will depend in part on the doubling time, and that, in turn, will depend directly on the tritium inventory. For the example given, if the breeding ratio were 1.33, the doubling time would be 88 days if the tritium holdup in other parts of the system were small compared to that in the lithium.

Some qualitative appraisals of the tritium removal problem have been included in previous reports (e.g., Refs 2 and 3). These consider classical techniques of either fractional crystallization or fractional distillation as means for separating the tritium from the lithium but they do not give any estimates of the size or cost of the equipment required or its relation to the size of the tritium inventory. The writer made some crude estimates following these approaches; these estimates indicated that the equipment required would be bulky and expensive to such a degree that it would be impractical to keep the tritium inventory to as low a level as would be desirable. The writer's association with some experiments on the migration of hydrogen from uranium-zirconium hydride fuel elements in liquid metal systems[4] suggested that the tritium might be removed from the lithium by allowing it to diffuse through thin metal walls in the system. A preliminary investigation showed that this is indeed feasible and that niobium is an ideal material for use as a tritium "window" since it, like palladium, has a diffusion coefficient for hydrogen at 1000°C that is over a thousand times that of the iron-chrome-nickel alloys. This report presents the results of a study in which the diffusion process was used as the basis for the conceptual design of a typical system.

Description of the Proposed System

A schematic diagram of the system envisioned is shown in Fig. 1. The lithium (or lithium-fluoride-bearing salt) would be circulated from the blanket of the thermonuclear reactor through a heat exchanger having a surface area about 15 times the area of the vacuum wall of the reactor. Further, the thickness of the tube walls of this heat exchanger would be about 1 mm, or of the order of 1/3 that of the vacuum wall of the reactor, hence the diffusion rate through the heat exchanger would be about 45 times that through the vacuum wall. In the system envisioned in Fig. 1, the heat removed from the lithium would be employed to boil potassium for a potassium vapor topping cycle.[5] The tritium diffusing through the walls of this potassium boiler would be carried along with the potassium vapor to a potassium vapor turbine through which it would be expanded and discharged to a potassium condenser which would also serve as a steam boiler.[5] Note that the potassium boiler would operate at about 1800°F and the potassium condenser at about 1100°F so that the steam generated in the potassium condenser-steam boiler would flow to the steam turbine at around 1050°F.

The potassium condenser would be made of stainless steel rather than niobium, and hence would be thousands of times less permeable to tritium than the niobium walls of the potassium boiler. (Limited ORNL experience indicates that there will not be serious amounts of mass transer if stainless steel is used in the cold portion of a boiling potassium system built largely of niobium.) The vapor flow into and through the potassium condenser would be channeled in such a way that the residual tritium in the potassium vapor would be swept to one end of the condenser, that is, the condenser vapor passages would be shaped so that they would converge as if the flow were into the base of a cone and toward its apex, thus enormously increasing the tritium concentration. (Condensers designed to do this functioned eminently well when tested in the MPRE program.[6]) A vent line from the equivalent of the apex of the cone would carry the concentrated tritium-potassium vapor mixture to a potassium condenser operating at a much lower pressure, thus further increasing the tritium concentration. A tube bank connected to the downstream end of the second condenser

would be heated to above 600°C, and vacuum pumps attached to the shell-side of the tube bank would remove the tritium diffusing through the tube walls. The discharge from the vacuum pump would be fed to a compressor from which it would be discharged into high pressure storage tanks. Note that one sphere 20 in. in diameter would hold sufficient tritium to operate the plant for a day if the storage pressure were 2000 psi.

For illustrative purposes a 5000 Mw(t) thermonuclear reactor essentially the same as the 4710 Mw reactor described on page A-20 of Ref. 1 was chosen to serve as a reference design. For purposes of this study the principal data for this plant are summarized in the first portion of Table 1. (The second portion of Table 1 summarizes the results of calculations made later in the report.) Data for the potassium vapor system were obtained by scaling from values given in Ref. 5.

Summary of Solubility and Diffusion Data

The rate at which a diatomic gas will permeate through a metal wall depends on several processes. First, the gas must dissociate and go into solution in the metal. It then diffuses through the metal as a consequence of the concentration gradient after which it must recombine as it leaves the metal surface at the other side. These problems are discussed in some detail in Ref. 7, and an equation for the overall permeation rate as a consequence of these interrelated processes is presented, that is,

$$V = \frac{C}{x}\left(P_1^{1/2} - P_2^{1/2}\right) \exp\left(-\frac{Q}{RT}\right) \times 10^{-5} \qquad (1)$$

where

V = volumn flow rate of permeating gas, $cm^3(STP)/sec \cdot cm^2$,

C = permeation constant for the gas-metal system, $cm^3(STP) \cdot mm/hr \cdot cm^2 \cdot atm^{1/2}$,

A = area of metal barrier, cm^2,

P_1 = upstream H_2 pressure, mm,

P_2 = downstream H_2 pressure, mm,

Q = activation energy of diffusion, cal/mole,

x = thickness of metal barrier, mm,

R = gas constant, cal/mole·°K = 1.987,

T = absolute temperature, °K.

Permeation Constant

The rate at which the gas will diffuse through the metal can be characterized by the permeation constant C in Eq. (1). Figure 2 (from Ref. 7) shows the effect of temperature on this constant for a wide variety of metals and alloys. Note particularly that the scale for the curves for niobium and palladium is at the right of the chart whereas the scale for all of the other metals is at the left, and that there is a factor of 100 difference between the two. As a consequence, the permeation rate for niobium at 1000°C is over 1000 times that for stainless steel at 1100°F.

Activation Energy

The quantity Q in Eq. (1) is the activation energy involved in the dissociation process as the gas enters the metal and the recombination process as it leaves. Values for permeation of hydrogen through typical metals and alloys are given in Table 2 (from Ref. 7).

Effects of Gas Pressure

It has been found that, for hydrogen partial pressures below about 10 mm, gas dissociation at the surface becomes the rate-controlling step in the permeation process, and the permeation rate shifts from a square root dependence on pressure to a linear dependence on pressure.[7] Thus Eq. (1) is applicable if the partial pressure of the hydrogen is in excess of 10 mm, but for lower pressures the permeation rate will fall off as the first power rather than the square root of the pressure.[7]

Effects of Atomic Weight of the Gas

A substantial amount of data for the diffusion of normal hydrogen through metals is available from several different investigators, and the results are quite consistent. Theoretical considerations indicate that the diffusion rate for deuterium and tritium should be reduced by the square root of the ratio of their atomic weight to that of normal hydrogen,

that is, $\sqrt{2}$ or $\sqrt{3}$, respectively. This relationship has been confirmed for deuterium in a number of investigations including one at ORNL with a liquid metal system.[4]

Solubility Data

One of the most important factors in this study is the relation between the partial pressure of hydrogen over lithium and the concentration of hydrogen in the lithium. The data in Ref. 8 for pressures of 10 to 100 mm indicate that the concentration varies as the square root of the pressure, and there is every reason to believe that this holds for the very low pressure range of interest in this study.

The limited data cited in Ref. 8, page 28, indicate that, at the low pressures of interest in this study, the molal concentration of deuterium or tritium in lithium would be essentially the same as for normal hydrogen at a given pressure. As a first approximation, the data available for normal hydrogen dissolved in Nak and potassium[4] were also assumed to be directly applicable to deuterium and tritium as were the solubility data for normal hydrogen in niobium as given in Ref. 9.

Analysis

In carrying out the analysis it became evident that the tritium concentration in various parts of the system would depend on the tritium pressure maintained on the shell-side of the tube bank used as a hydrogen window at the outlet of the second stage potassium condenser. It was decided arbitrarily to make this pressure 0.002 mm and make the tube-side pressure 0.010 mm. It was further decided aribtrarily that the potassium condenser surface area in the secondary condenser should be made sufficient so that the partial pressure of the tritium near the tritium outlet would be half the total pressure in the secondary condenser. This implies a potassium vapor temperature of 400°F in the secondary condenser.

On the basis of the above assumption it was then possible to calculate the surface area required for the hydrogen window, the size of the vacuum pumps required, and the loss of tritium through the stainless steel tube walls of the potassium condenser-steam boiler assuming that the tritium

concentrating effects of the secondary condenser would yield a partial pressure for the tritium in the vapor stream leaving the main condenser equal to that at the outlet of the secondary condenser. This implies that the potassium vapor volume flow rate into the secondary condenser ought to be 10,000 times the tritium flow rate. For a potassium condensing coefficient of 10,000 Btu/hr·ft^2·°F and a condensing film temperature drop of 10°F, the surface area nominally required in the secondary condenser would be only 100 ft^2. A value five times this was assumed to assure an adequate area.

On the basis of the partial pressure of tritium in the main potassium condenser, one can calculate the tritium concentration in the potassium condensate, and this in turn gives the partial pressure of the tritium in the liquid potassium in the lithium-to-potassium boiler. From the latter, straightforward calculations can be made to give the tritium concentration in both the lithium and the niobium walls of the lithium system.

Tritium Permeation through Tube Walls

In carrying out the calculations the first step was to use Eq. (1) to estimate the permeation rate for tritium through a 1 mm thick niobium tube wall at 1000°C with a tritium pressure of 10 mm upstream and 5 mm downstream, that is,

$$V = \frac{1040 \times 10^{-5}}{\sqrt{3}} \left(\sqrt{10} - \sqrt{5} \right) \exp \left(- \frac{3430}{1.987 \times 1273} \right)$$

$$= 0.00145 \text{ cm}^3 \text{ (STP)/sec·cm}^2 .$$

Note that Eq. (1) as used above was corrected for the difference between normal hydrogen and tritium by dividing by $\sqrt{3}$.

The tritium permeation rate was conservatively estimated to vary directly with the pressure between 10 mm and 0.01 mm, so that the permeation rate given above for 10 mm was reduced by a factor of 1000 to give a permeation rate of 1.45×10^{-6} cm^3(STP)/sec·cm^2.

The permeation rate through the steel tube walls in the potassium condenser was also estimated from Eq. (1) using the constants given in Table 2 for stainless steel. As in the calculations for niobium, the

calculations for stainless steel were first made for a tritium partial pressure of 10 mm upstream. To be conservative the downstream partial pressure was taken as zero. The resulting value was then reduced by a factor of 1000 to give the permeation rate at 0.010 mm. The calculation was

$$V = \frac{850 \times 10^{-5}}{2 \times \sqrt{3}} \left(\sqrt{10} - \sqrt{0}\right) \exp\left(-\frac{16,100}{1.98 \times 866}\right) = 6.63 \times 10^{-7} .$$

For a tritium partial pressure of 10 microns, the leakage through the stainless steel into the steam would be 6.63×10^{-10} $cm^3(STP)/sec \cdot cm^2$.

The area required for the Nb "window" for removing tritium from the downstream end of the secondary potassium condenser was estimated from the permeation rate given above together with the required tritium flow rate of 1 kg/day [or 43.2 $cm^3(STP)/sec$]. A correction factor of 1.87 was also applied to allow for the use of a pressure ratio of 5 rather than 2 across the hydrogen window, that is,

$$\text{Nb window area} = \frac{43.2}{1.87 \times 1.45 \times 10^{-5} \times 929} = 17,150 \text{ ft}^2 .$$

This area would be provided by 3425 tubes having a diameter of 1.0 in. and a length of 20 ft.

The tritium permeation rate through the tube walls of the potassium condenser-steam boiler was estimated using the condenser surface area of Table 1 as follows:

$$\text{Tritium permeation rate} = 6.63 \times 10^{-10} \times 160,000 \times 929$$
$$= 0.0983 \text{ cm}^3(\text{STP})/\text{sec} .$$

Note that this represents a tritium loss rate equal to about 0.2% of the generation rate. While the loss is small from the standpoint of the tritium economy, this tritium leakage rate would require good control of steam leakage from the main steam system to avoid a health hazard.

The drop in the tritium partial pressure associated with the permeation through the lithium-to-potassium boiler was estimated using the surface area of Table 1 as follows:

$$\text{Required permeation rate} = \frac{43.2}{75{,}000 \times 929} = 0.62 \times 10^{-6}\ \text{cm}^3/\text{sec}\cdot\text{cm}^2 .$$

Partial pressure in lithium:

$$0.62 \times 10^{-6} = 1.56 \times 10^{-6}\ (P_1 - 0.01)$$

$$P_1 = \frac{0.62 \times 10^{-6}}{1.56 \times 10^{-6}} + 0.01 = 0.004 + 0.01 = 0.014\ \text{mm} .$$

Tritium Inventory

The tritium concentration in the lithium at 1000°C is about 1 mol % for a tritium partial pressure of 10 mm (Ref. 8). Assuming that the concentration varies as the square root of the partial pressure, it follows that

$$\text{Mol \% tritium} = \sqrt{0.014/10} = 0.0375 .$$

Thus the total tritium inventory in the 50,000 kg of lithium would be

$$\text{Tritium inventory in Li} = 50{,}000 \times \frac{0.0375 \times 3}{100 \times 7} = 8.0\ \text{kg} .$$

The tritium concentration in the potassium is about 0.1 cm^3(STP)/g at 1100°F and 1 mm (Ref. 4). Assuming a square root relation, the concentration at 0.01 mm would be 0.01 cm^3(STP)/g. Thus the tritium inventory in the potassium becomes

$$\text{Tritium inventory in K} = 9 \times 10^7 \times 0.01 = 0.9 \times 10^6\ \text{cm}^3(\text{STP})$$

$$\cong \frac{9 \times 10^3 \times 6}{22.4} = 241\ \text{g}$$

$$= 0.241\ \text{kg} .$$

The tritium concentration in the niobium at 1000°C is 1 mol % at a pressure of 120 mm (Ref. 9). Assuming a square root relation, the concentration at 0.01 mm would be 0.009 mol %, or 90 ppm.

Vacuum Pump Capacity

The vacuum pump capacity required to remove 43.2 cm^3(STP)/sec from the region outside the hydrogen "window" would be about 16,400 liters/sec (i.e., 35,000 ft^3/min) at 0.002 mm. This would require a flow passage area of about 4 ft^2. The vacuum pump requirements could be met by employing Roots blower high-vacuum booster pumps for the low pressure stages and conventional mechanical pumps for the balance. A typical installation of this sort that has been built for the space program is shown in Fig. 3. The vacuum pump system specified in Table 1 was scaled from the system of Fig. 3 with an allowance for an extra capacity of about 100%. The cost of the vacuum pump system would be around $100,000.

It is also possible that some other system such as a cryogenic pumping system might be employed to give a less expensive system. Potassium vapor diffusion pumps might be used in the same fashion as steam-driven air ejectors in conventional steam condensers, for example, to increase the tritium pressure in the tube bank serving as the hydrogen "window" and thus reduce the size and cost of the hydrogen "window."

Summary

The results of the above calculations for a typical system have been summarized in Table 1. In appraising these, it appears quite reasonable to make use of diffusion through the heat exchanger tube walls to remove the tritium from the lithium, and the resulting equilibrium concentration of the tritium in the lithium can be kept to around 0.04 mol %, giving a tritium inventory of only about 10 kg. Tritium diffusion outward from the lithium system through the niobium shell to the region between it and the water shield will run about 0.2% of the amount diffusing through the heat exchanger tube walls if it is assumed that the outer wall of the lithium blanket region has a thickness of 3 mm. Leakage of tritium from the piping of the potassium vapor system will be much lower than this

because of the much smaller area involved, but it will still not be negligible, and will require that both the lithium system and the potassium piping be enclosed and the enclosed atmosphere be processed to maintain the tritium at a low concentration.

The hydrogen concentration in the niobium of the lithium system as estimated above was approximately 90 ppm. The data in Refs. 10 and 11 indicate that, with a hydrogen concentration in niobium of 400 ppm, the elongation in niobium is reduced to 5% at 0°C, an acceptable value. Thus hydrogen embrittlement at 90 ppm should be much less pronounced so that it would not be a serious problem, particularly since operation of the tritium removal system after stopping the nuclear reaction would make it possible to reduce the tritium concentration in both the Li and Nb substantially below the normal operating level before cooling the niobium system to room temperature.

The principal items of equipment required are a niobium tube bank having a surface area of about 17,000 ft^2 and a set of vacuum pumps of about 250 hp. The cost of the former would run about $3,400,000 (assuming a cost twenty times that of stainless steel,[5] or about $200/$ft^2$) as compared to about $100,000 for the latter. This, coupled with the $10,000,000 nominal value of the tritium inventory, suggests that a greater investment in vacuum pumps or some other step to reduce the capital investment might be in order.

The tritium inventory in the system represents the principal potential hazard associated with the reactor. It is interesting to compare the roughly 10 kg inventory of tritium in the proposed thermonuclear reactor system with the fission product inventory of a fission reactor of comparable size. Half way through the life of a typical fuel loading the latter inventory would run about 3000 kg of fission products. In addition there would be at least that amount of plutonium, and possibly many times as much. The biological effectiveness of many of the fission products and the plutonium would run from 10^5 to 10^7 times that of the tritium.[12] Thus the hazard potential associated with radioactive material inventory will be at least a factor of 10^{10} lower in a thermonuclear reactor than in a fission reactor.

While detailed calculations were not carried out for a typical lithium fluoride-bearing molten salt, preliminary estimates indicate that much the same system proportions would result. An added problem is posed by release of free fluorine atoms when a lithium atom absorbs a neutron to give an alpha particle plus tritium; the tritium would react with the fluorine to give HF. ORNL experience indicates that a modest amount of metallic beryllium surface in the molten salt system will react with the HF and release the tritium before the HF concentration builds up sufficiently to give difficulties with corrosion.

Acknowledgement

The writer deeply appreciates the advice and assistance given by R. E. Clausing and W. R. Huntley in connection with the hydrogen diffusion calculations. Their independent estimates gave an invaluable check on the order of magnitude of the permeation rates to be expected. In addition, R. E. Clausing also provided the information cited on hydrogen embrittlement of niobium.

References

1. D. J. Rose, On the Feasibility of Power by Nuclear Fusion, USAEC Report ORNL-TM-2204, Oak Ridge National Laboratory, 1968.

2. S. S. Kirslis, The Interaction of Tritium with Thermonuclear Reactor Materials; A Literature Study and Problem Evaluation, personal communication (November 1966).

3. Ernest F. Johnson, Recovery of Tritium from Dilute Solutions of Lithium Tritide in Lithium, USAEC Report NYO-6370, Princeton University, 1956.

4. H. W. Savage et al., SNAP-8 Corrosion Program Summary Report, USAEC Report ORNL-3898, Oak Ridge National Laboratory, December 1965.

5. W. R. Chambers, A. P. Fraas, M. N. Ozisik, A Potassium-Steam Binary Vapor Cycle for Nuclear Power Plants, USAEC Report ORNL-3584, May 1964.

6. A. P. Fraas, Design and Development Tests of Direct-Condensing Potassium Radiators, pp. 716-736 in AIAA Specialists Conference on Rankine Space Power Systems, Vol. I, USAEC Report CONF-651026, October 1965.

7. R. W. Webb, Permeation of Hydrogen Through Metals, USAEC Report NAA-SR-10462, Atomics International, July 25, 1965.

8. C. E. Messer, A Survey Report on Lithium Hydride, USAEC Report NYO-9470, Tufts University, Medford, Mass., Oct. 27, 1960.

9. W. M. Albrecht, W. D. Goods, and M. W. Mallett, Reactions in the Niobium-Hydrogen System, Journal of the Electrochemical Society, 106(11): 981 (November 1959).

10. Hahn, Gilbert and Jaffe, Effects of Solutes on Ductile to Brittle Transition in Refractory Metals, Symposium on Refractory Metals and Alloys, Vol. 2, Chicago, April 12–13, 1962, AIME, p. 23.

11. G. L. Miller, Ta and Nb, Vol. 6 of Series on Rare Earth Metals, Academic Press, 1959.

12. Maximum Permissable Body Burden and Maximum Permissable Concentration of Radionuclides in Air and Water for Occupational Exposure, National Bureau of Standards Handbook No. 69, June 5, 1959.

Table 1. Data Related to Tritium Recovery from the Reference Design Thermonuclear Reactor System

Reactor type	Magnetic Mirror
Thermal power output, Mw	5,000
Tritium generation rate in Li, kg/day	1.0
Tritium generation rate in Li, cm^3(STP)/sec	43.2
System pressures	
Pressure of tritium leaving hydrogen window, mm	2×10^{-3}
Pressure of tritium entering hydrogen window, mm	10×10^{-3}
Partial pressure of tritium entering secondary K condenser, mm	10×10^{-3}
Partial pressure of tritium leaving main K condenser, mm	10×10^{-3}
Partial pressure of potassium in main K condenser, mm	115
Partial pressure of potassium in secondary K condenser, mm	10×10^{-3}
System temperatures	
Temperature in vapor in secondary K condenser, °F	400
Temperature in vapor in main K condenser, °F	1100
Temperature in vapor in potassium boiler, °F	1830
Vacuum wall	
Vacuum wall ID, m	10
Vacuum wall surface area, m^2	500
Vacuum wall thickness, mm	3
Material inventories	
Li inventory in blanket system, kg	50,000
Niobium inventory in Li system, kg	180,000
Potassium inventory, kg	90,000
Surface areas	
Surface area in Li-to-K boiler, ft^2	75,000
Tube wall thickness in Li-to-K boiler, mm	1.0
Tube wall thickness in Li-to-K condenser, mm	2.0
Surface area in primary K condenser, ft^2	160,000
Surface area in secondary K condenser, ft^2	500
Permeation rates	
Permeation rate through hydrogen window, cm^3(STP)/cm^2·sec	1.45×10^{-6}
Permeation rate through hydrogen window, cm^3(STP)/sec	43.2
Permeation rate through K condenser-steam boiler, cm^3(STP)/sec·cm^2	6.63×10^{-10}
Permeation rate through K condenser-steam boiler, cm^3(STP)/sec	0.0983

Table 1. (continued)

Permeation rate through Li-to-K boiler, $cm^3(STP)/sec \cdot cm^2$	0.62×10^{-6}
Permeation rate through Li-to-K boiler, $cm^3(STP)/sec$	43.2
Hydrogen window	
Surface area in hydrogen window, ft^2	17,150
Tube wall thickness in hydrogen window, mm	1.0
Tube diameter in hydrogen window, in.	1.0
Tube length in hydrogen window, ft	20
Number of tubes	6,720
Tritium inventory	
Tritium inventory in potassium, kg	0.24
Tritium inventory in lithium, kg	9.08
Tritium inventory in niobium, kg	0.8
Tritium concentration in niobium, pp	90
Vacuum Pumps	
First stage compression ratio	200
Number of Roots blowers in parallel	4
Second stage compression ratio	25
Number of Roots blowers	1
Third stage compression ratio	7
Number of Roots blowers	1
Forepump inlet pressure, mm	35
Forepump discharge pressure, mm	760
Number of oilless forepumps	1

Table 2. Activation Energies for Diffusion and Permeation Constants

$$\left[\varphi = \frac{CP^{1/2}}{x} \exp\left(-\frac{Q}{RT}\right) \right]$$

Metal	Reference	Q (cal/mole)	C $\left[\frac{cc(STP)\cdot mm}{hr\cdot cm^2\cdot atm^{1/2}}\right]$
Hastelloy N	AI[a]	13,800	190
Hastelloy B	16	16,675	1,810
Nickel	1, 2, 15, 17	13,400	1,000
Iron	1, 2, 17	9,100	144
Type 304 SS	AI,[a] 17	16,100	850
Type 316 SS	13, 15	16,075	1,526
Type 321 SS	13, 15	16,075	1,526
Type 430 SS	15	11,200	360
PH15-7Mo SS	AI[a]	20,000	7,800
Haynes 25	AI,[a] 17	15,100	327
Molybdenum	2, 15, 17	20,100	950
Tungsten	AI,[a] 17	29,340	1,840
Niobium	17, 18	3,430	1,040
Platinum	1, 2	18,600	1,840
Palladium	1	4,500	6,100

[a]Data from Ref. 7.

ORNL DWG. 68-13360

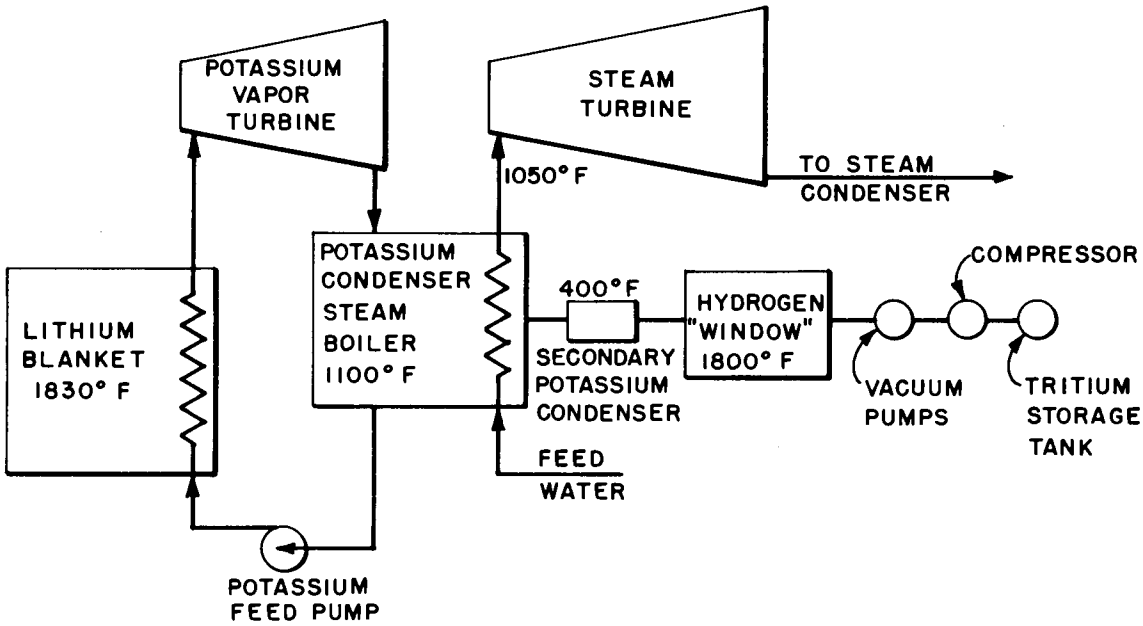

Fig. 1. Schematic Diagram Showing the Major Components Involved in the Proposed Tritium Recovery System for a Thermonuclear Reactor.

ORNL DWG. 68-12758

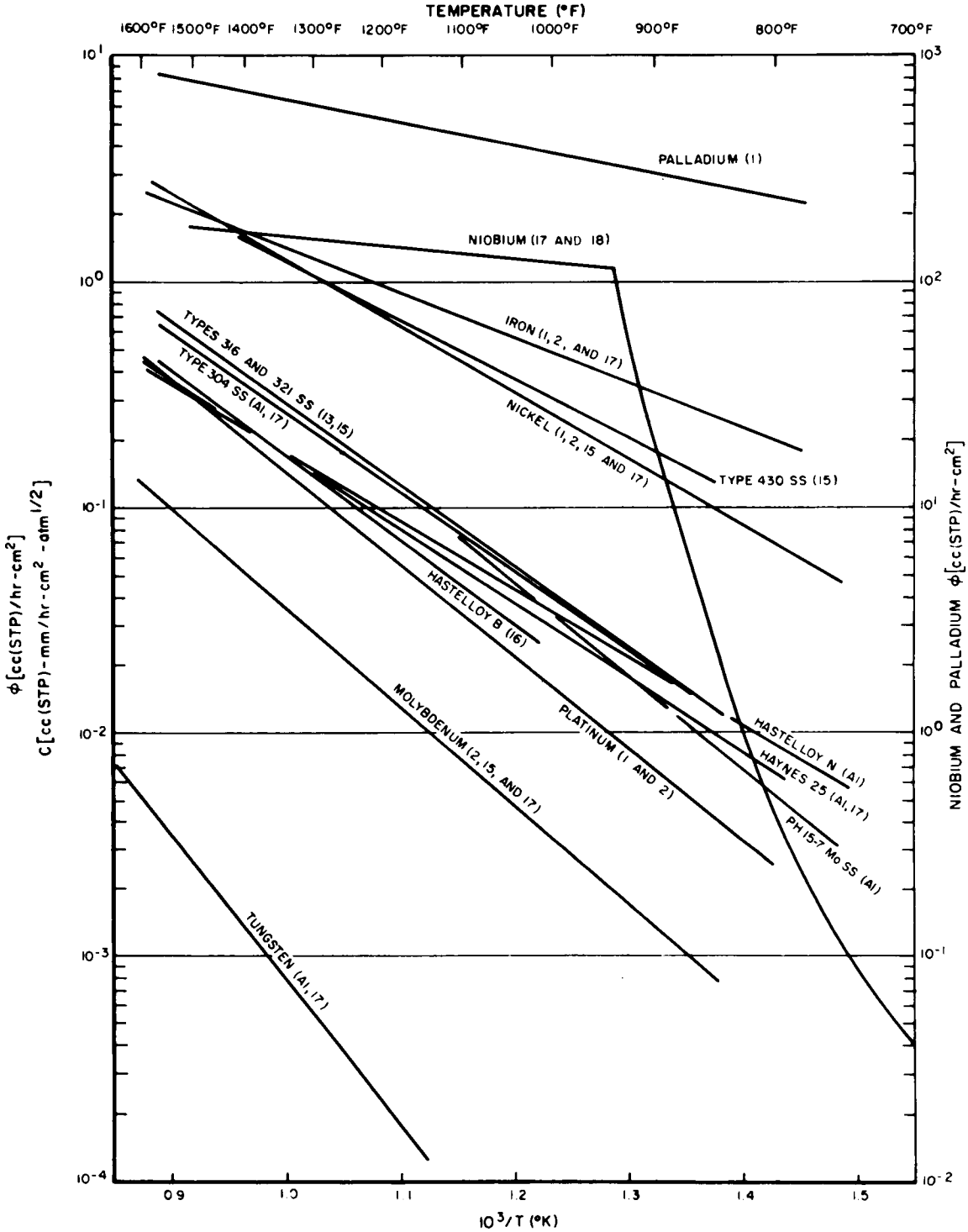

Fig. 2. Effects of Temperature on Permeation Constants for Typical Metals and Alloys. USE THE RIGHT SCALE FOR NIOBIUM AND PALLADIUM AND THE LEFT SCALE FOR ALL OTHERS. (Taken from Ref. 7)

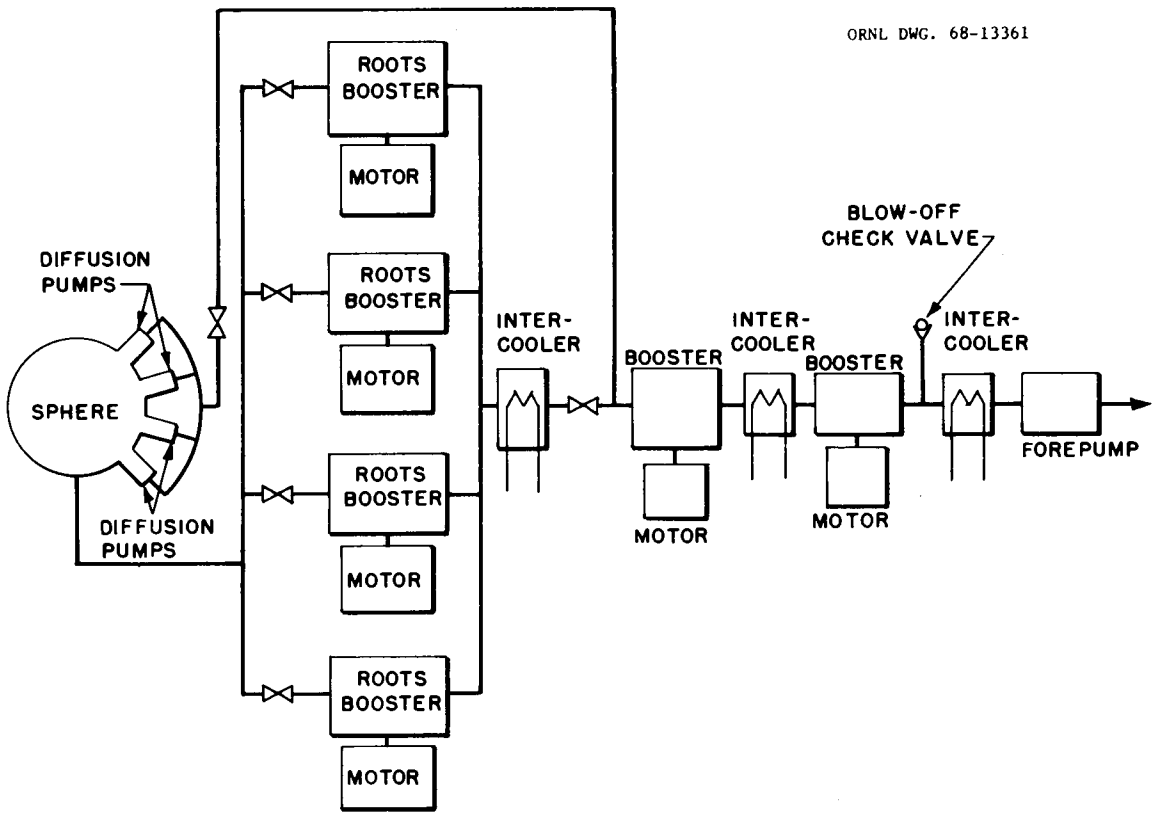

Fig. 3. Flow Sheet for a Vacuum System Built for a NASA Vacuum Chamber. This system closely approximates that required for the tritium removal system of this report.

Internal Distribution

1. I. Alexeff
2. W. B. Ard
3. C. F. Barnett
4. S. E. Beall
5. C. O. Beasley
6. J. F. Clarke
7. R. E. Clausing
8. D. L. Coffey
9. R. J. Colchin
10. W. B. Cottrell
11. F. L. Culler
12. R. A. Dandl
13. R. C. Davis
14. R. A. Dory
15. J. L. Dunlap
16. H. O. Eason, Jr.
17. P. H. Edmonds
18. R. S. Edwards
19. A. C. England
20. W. M. Farr
21. A. P. Fraas
22. J. E. Francis
23. W. F. Gauster
24. G. E. Guest
25. W. Halchin
26. G. R. Haste
27. D. P. Hammond
28. P. N. Haubenreich
29. W. J. Herrmann
30. W. R. Huntley
31. R. P. Jernigan, Jr.
32. W. D. Jones
33. P. R. Kasten
34. G. C. Kelley
35. N. H. Lazar
36. M. S. Lubell
37. M. I. Lundin
38. J. N. Luton, Jr.
39. J. F. Lyon
40. R. N. Lyon
41. H. G. MacPherson
42. H. C. McCurdy
43. J. R. McNally, Jr.
44. H. K. Meier
45. A. J. Miller
46. O. B. Morgan
47. R. V. Neidigh
48. C. E. Parker
49. A. M. Perry
50. H. Postma
51. M. Roberts
52. M. W. Rosenthal
53. A. W. Savolainen
54. E. D. Shipley
55. M. J. Skinner
56. D. J. Sigmar
57. A. H. Snell
58. I. Spiewak
59. D. Steiner
60. W. L. Stirling
61. R. F. Stratton
62. R. A. Strehlow
63. D. A. Sundberg
64. D. B. Trauger
65. A. M. Weinberg
66. G. D. Whitman
67. O. C. Yonts

68–69. Thermonuclear Division Library
70–71. Central Research Library (CRL)
72. Y-12 Document Reference Section (DRS)
73–75. Laboratory Records Department (LRD)
76. Laboratory Records Department – Record Copy (LRD-RC)
77. ORNL Patent Office

External Distribution

78. P. L. Auer, Cornell University, Grumman Hall, Ithaca, New York 14850.
79. M. Benedict, Massachusetts Institute of Technology, Cambridge, Massachusetts 02139.

80–84. A. S. Bishop, Division of Research, (Controlled Thermonuclear (Research), U.S. Atomic Energy Commission, Washington, D.C. 20545.
85. C. M. Braams, FOM-Instituut voor Plasma-Fysica, Rijnhuizen, Jutphaas, The Netherlands.
86. K. A. Brueckner, University of California, San Diego, California, P. O. Box 109, La Jolla, California 92038.
87. S. J. Buchsbaum, Sandia Corporation, Box 5800, Albuquerque, New Mexico 87115.
88. G. Bekefi, Massachusetts Institute of Technology, Cambridge, Massachusetts 02139.
89. T. Consoli, Centre d'Etudes Nucleaires de Saclay, B. P. No. 2, Gif-sur-Yvette (Seine-et-Oise) France.
90. R. Carruthers, Culham Laboratory, Culham, Abingdon, Berks., England.
91. N. Christofilos, University of California, Lawrence Radiation Laboratory, P. O. Box 808, Livermore, California 94551.
92. T. H. Dupree, Massachusetts Institute of Technology, Cambridge, Massachusetts 02139.
93. J. E. Drummond, Boeing Scientific Research Laboratories, P. O. Box 3981, Seattle, Washington 98124.
94. W. E. Drummond, Department of Physics, University of Texas, Austin, Texas 78712.
95. B. J. Eastlund, Division of Research, U.S. Atomic Energy Commission, Washington, D.C. 20545.
96. H. K. Forsen, Department of Nuclear Engineering, University of Wisconsin, Madison, Wisconsin 53702.
97. T. K. Fowler, University of California, Lawrence Radiation Laboratory, P. O. Box 808, Livermore, California 94551.
98. W. A. Fowler, California Institute of Technology, 1201 East California Blvd., Pasadena, California 91109.
99. G. von Gierke, Institute for Plasma Physics, 8046 Garching bei Munchen, Federal Republic of Germany.
100. M. B. Gottlieb, Princeton University, P. O. Box 451, Princeton, New Jersey 08540.
101. W. C. Gough, Division of Research (CTR), U.S. Atomic Energy Commission, Washington, D.C. 20545.
102. R. W. Gould, Department of Physics, California Institute of Technology, Pasadena, California 91109.
103. R. Hancox, Culham Laboratory, Culham, Abingdon, Berks., England.
104. E. G. Harris, Department of Physics, the University of Tennessee, Knoxville, Tennessee.
105. P. Hubert, Service de Recherches sur la Fusion Controlee, Centre d'Etudes Nucleaires, Fontenay-aux-Roses (Seine), France.
106. J. Kistemaker, Institute for Atomic and Molecular Physics, 407 Kruislaan, Amsterdam (0), The Netherlands.
107. D. W. Kerst, Department of Physics, Sterling Hall, University of Wisconsin, Madison, Wisconsin 53706.
108. H. W. Lewis, Physics Department, University of California, Santa Barbara, California 93106.
109. B. Lehnert, Royal Institute of Technology, Stockholm 70, Sweden.
110. L. M. Lidsky, Massachusetts Institute of Technology, Cambridge, Massachusetts 02139.

111. R. G. Mills, Princeton University, P. O. Box 451, Princeton, New Jersey 08540.
112. R. S. Pease, UK Atomic Energy Authority, Culham Laboratory, Culham, Abingdon, Berks., England.
113. J. A. Phillips, Los Alamos Scientific Laboratory, P. O. Box 1663, Los Alamos, New Mexico 87544.
114. R. F. Post, University of California, Lawrence Radiation Laboratory, P. O. Box 808, Livermore, California 94551.
115. F. L. Ribe, Los Alamos Scientific Laboratory, P. O. Box 1663, Los Alamos, New Mexico 87544.
116–120. D. J. Rose, Department of Nuclear Engineering, Massachusetts Institute of Technology, Cambridge, Massachusetts 02139.
121. M. Rosenbluth, School of Natural Sciences, Princeton University, P. O. Box 451, Princeton, New Jersey 08540.
122. F. R. Scott, Department of Physics, The University of Tennessee, Knoxville, Tennessee.
123. K. H. Schmitter, Institute for Plasma Physics, 8046 Garching bei Munchen, Federal Republic of Germany.
124. T. H. Stix, Department of Astrophysical Sciences, Princeton University, P. O. Box 451, Princeton, New Jersey 08540.
125. R. F. Taschek, Los Alamos Scientific Laboratory, P. O. Box 1663, Los Alamos, New Mexico 87544.
126. T. J. Thompson, Massachusetts Institute of Technology, Cambridge, Massachusetts 02139.
127. J. L. Tuck, Los Alamos Scientific Laboratory, P. O. Box 1663, Los Alamos, New Mexico 87544.
128. C. M. Van Atta, University of California, Lawrence Radiation Laboratory, P. O. Box 808, Livermore, California 94551.
129. C. N. Watson-Munro, University of Sydney, Wills Plasma Project, Sydney, Australia.
130. S. Yoshikawa, Princeton University, P. O. Box 451, Princeton, New Jersey 08540.
131. T. O. Ziebold, Massachusetts Institute of Technology, Cambridge, Massachusetts 02139.
132. Academician L. A. Artsimovich, Director, Thermonuclear Laboratory, Kurchatov Institute of Atomic Energy, 46 Ulitsa Kurchatova, Post Box 3402, Moscos, U.S.S.R.
133. A. M. Budker, Nuclear Physics Institute, Siberian Academy of Sciences, Novosibirsk 90, U.S.S.R.
134. M. S. Rabinovich, Lebedev Institute of Physics, Academy of Sciences of the USSR, Leninsky Prospect 53, Moscow, U.S.S.R.
135. E. Komar, D. V. Efremov Scientific Research Institute of Electro-Physical Apparatus, Leningrad, U.S.S.R.
136. V. M. Tuchkevich (Attn: Dr. V. E. Golant), A. F. Ioffe Physical-Technical Institute of the Academy of Sciences of the U.S.S.R., Leningrad K-21, U.S.S.R.
137. O. Lupandin, Division of Particle Accelerators and CTR, State Committee of the U.S.S.R. for Utilization of Atomic Energy, Moscow, 180, U.S.S.R.
138. Librarian, Department of Physics, The University of Iowa, Iowa City, Iowa 52240.

139. Center for Plasma Physics and Thermonuclear Research, The University of Texas, Physics Building 330, Austin, Texas 78712.
140. Plasma and Ion Physics Laboratory, Illinois Institute of Technology, Department of Physics, Chicago, Illinois 60615.
141. Librarian, Midwestern Universities Research Association, P. O. Box 6, Stoughton, Wisconsin 53589.
142. Director, Technical Library, Defense Atomic Support Agency, Sandia Base, Albuquerque, New Mexico 87115
143. Librarian, Institute for Plasma Physics, 8046 Garching bei Munchen, Federal Republic of Germany.
144. Librarian, Culham Laboratory, UK Atomic Energy Authority, Abingdon, Berks., England.
145. Laboratory and University Division, U.S. Atomic Energy Commission, P. O. Box E, Oak Ridge, Tennessee 37830.
146–160. Division of Technical Information Extension, U.S. Atomic Energy Commission, P. O. Box E, Oak Ridge, Tennessee 37830.