LOCKHEED MARTIN ENERGY RESEARCH LIBRARIES
3 4456 0515895 9

CENTRAL RESEARCH LIBRARY
DOCUMENT COLLECTION

3

ORNL-4143
UC-32 – Mathematics and Computers

THE OAK RIDGE COMPUTER-CONTROLLED X-RAY DIFFRACTOMETER

W. R. Busing
R. D. Ellison
H. A. Levy
S. P. King
R. T. Roseberry

OAK RIDGE NATIONAL LABORATORY
CENTRAL RESEARCH LIBRARY
DOCUMENT COLLECTION
LIBRARY LOAN COPY
DO NOT TRANSFER TO ANOTHER PERSON
If you wish someone else to see this document, send in name with document and the library will arrange a loan.
UCN-7969
(3 3-67)

OAK RIDGE NATIONAL LABORATORY
operated by
UNION CARBIDE CORPORATION
for the
U.S. ATOMIC ENERGY COMMISSION

Printed in the United States of America. Available from Clearinghouse for Federal Scientific and Technical Information, National Bureau of Standards, U.S. Department of Commerce, Springfield, Virginia 22151
Price: Printed Copy $3.00; Microfiche $0.65

LEGAL NOTICE

This report was prepared as an account of Government sponsored work. Neither the United States, nor the Commission, nor any person acting on behalf of the Commission:

A. Makes any warranty or representation, expressed or implied, with respect to the accuracy, completeness, or usefulness of the information contained in this report, or that the use of any information, apparatus, method, or process disclosed in this report may not infringe privately owned rights; or

B. Assumes any liabilities with respect to the use of, or for damages resulting from the use of any information, apparatus, method, or process disclosed in this report.

As used in the above, "person acting on behalf of the Commission" includes any employee or contractor of the Commission, or employee of such contractor, to the extent that such employee or contractor of the Commission, or employee of such contractor prepares, disseminates, or provides access to, any information pursuant to his employment or contract with the Commission, or his employment with such contractor.

ORNL-4143

Contract No. W-7405-eng-26

THE OAK RIDGE COMPUTER-CONTROLLED X-RAY DIFFRACTOMETER

by

W. R. Busing, R. D. Ellison, H. A. Levy,
Chemistry Division,

S. P. King, Mathematics Division,

and

R. T. Roseberry, Instrumentation and Controls Division

JANUARY 1968

OAK RIDGE NATIONAL LABORATORY
Oak Ridge, Tennessee
operated by
UNION CARBIDE CORPORATION
for the
U.S. ATOMIC ENERGY COMMISSION

LOCKHEED MARTIN ENERGY RESEARCH LIBRARIES
3 4456 0515895 9

ABSTRACT

The Oak Ridge computer-controlled X-ray diffractometer consists of a Picker four-circle diffractometer interfaced to a Digital Equipment Corporation PDP-5 computer. A system of programs has been developed which facilitates the collection of three-dimensional single-crystal intensity data. This report includes detailed instructions for using the instrument, a description of the interface hardware and software, and a complete listing of the computer programs.

CONTENTS

I. Introduction. 4
Figure 1. Computer-controlled diffractometer. . 5
II. Operating procedure 6
Loading diffractometer programs. 7
List of keyboard signals 10
Description of keyboard signals. 9
Basic 9
External equipment control. 12
Initializing angles 12
Motor drives. 13
Ratemeter and step scans. 13
Azimuthal scans 14
Preparation for angle calculations. 15
Angle calculations. 16
Peak finding. 16
Least squares 20
Data collection 23
Input data format. 27
Rejection test for data collection 28
Typical data-collection procedures 29
Initializing instrument angles. 29
Mounting and centering the sample 30
Determining the sample orientation. 30
Observations for least-squares refinement . 33
Least-squares refinement. 34
Data collection 34
Renninger effect. 36
III. Description of the interface. 37
Clock interrupt 38
Status register 39
Control register. 40
Motor-drive system. 40
One-degree marker system. 43

Data-counting system. 45
Chart recorder. 47
Limit switches. 48
Shutter, filters, and attenuators 49
Audio output. 49
Modification of reader circuitry. 50
Figure 2. Schematic flow chart of program . . . 52
Summary of input/output commands 53
IV. Programming information 55
General programming rules. 55
Rules for interrupt programs 56
System of keyboard signals 57
Common storage 59
List of subroutines available. 59
Description of subroutines 61
Input routines. 61
Output routines 62
Arithmetic. 66
Trigonometry. 69
Matrix and vector operations. 70
Utility routines. 71
Basic system. 74
Keyboard/reader 74
Teleprinter/punch 75
Counting routines 76
Motor routines. 76
Chart recorder. 79
External devices. 80
Audio output. 81
Available memory locations 82
Program listings 84
Arithmetic routines 84
Interface routines. 105
Set-up program. 122
Azimuthal scan. 139

Azimuthal scan, parallel. 144
Half-sphere search. 145
Search for second reflection. 149
Center Bragg angle. 154
Matrix from three reflections 158
Cell parameters from matrix 161
Angle between two observed vectors. 164
Orientation least squares 165
Constraints for least squares 190
Data-collection program 191
Example of rejection test 207
Modifications for parallel position 207
Data collection for omega scans 209
Fast peak-top data program. 212
Collect data for specified psi. 218
Data for specified psi, parallel. 234
Binary loader 235
Tape-memory comparison. 236
Binary punch. 237
Appendix A. Motor-drive test program 239
Instructions for motor-drive test program. 239
Typical output of motor-drive test program 241
Listing of motor-drive test program. 242
Appendix B. PDP-5 drawings 247
PDP-5 X-ray diffractometer interface logic 249
PDP-5 X-ray diffractometer interface details 250
Appendix C. PDP-8 drawings 251
PDP-8 diffractometer interface logic, sheet 1 253
PDP-8 diffractometer interface logic, sheet 2 254
Simplified block diagram 255
Cable and connector diagram. 256
Degree-marker mechanism. 257
Distribution. 259

I. INTRODUCTION

The Oak Ridge computer-controlled X-ray diffractometer consists of a Picker 4-circle diffractometer interfaced to a Digital Equipment Corporation PDP-5 computer. Programs are provided to perform many operations useful for orienting single crystals, measuring lattice parameters, and collecting intensity data. Shown on the left in Figure 1 is the diffractometer with the X-ray tube, the scintillation counter, and the four motors which orient the crystal and position the counter. On the right is the computer and in the foreground is the teleprinter which is the principal input/output unit of the system. In the relay rack are the power supply and amplifier for the counter, the chart recorder which operates under computer control, and parts of the motor-drive interface.

The diffractometer, computer, and computer programs comprise a working instrument which can be used by an experimenter unfamiliar with either the computer or the details of the programs. Part II of this report is intended to serve as a handbook for such a user. Part III describes the interface hardware and the logic of the subprograms associated directly with it. Finally in Part IV the entire set of programs is presented with sufficient description to permit the user to modify it or to prepare new programs to perform other operations. Several versions of this instrument using the newer PDP-8 computer are under construction in this Laboratory, and interface drawings for this computer are included in Appendix C.

The authors wish to acknowledge the assistance of the many persons who contributed to the development and construction of this instrument. We would particularly like to mention the work of J. K. East, Chemistry Division, who designed the photoelectric marker devices used with the present instrument and who tested preliminary versions of

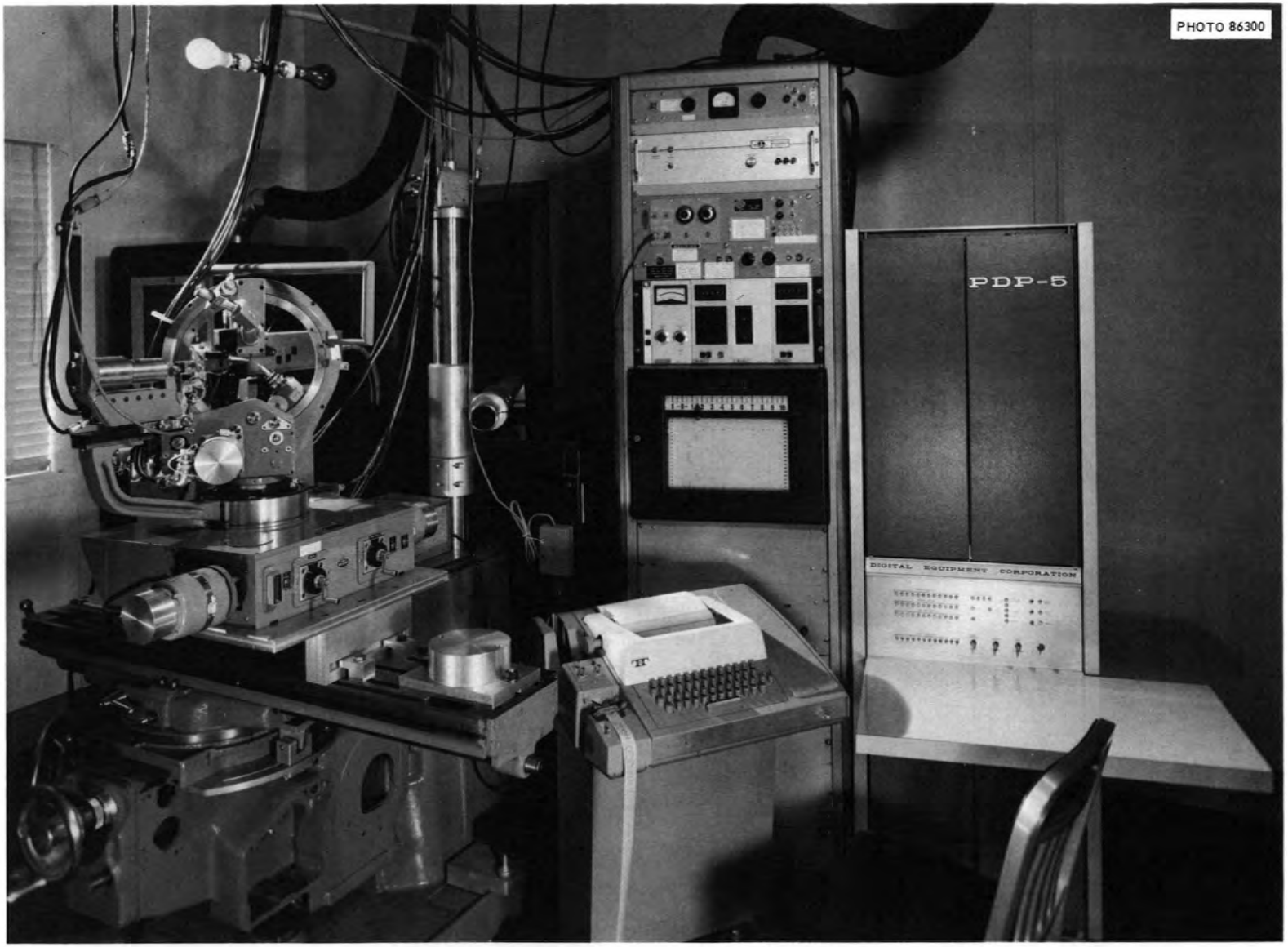

Figure 1. The Oak Ridge computer-controlled X-ray diffractometer.

the motor-drive and chart recorder systems. Thanks are due G. W. Allin, Instrumentation and Controls Division, who designed the shutter and filter assemblies and also the photoelectric marker devices which will be used on future versions of the instrument. We also acknowledge the cooperation of members of the Computer Engineering Group: J. W. Woody, Jr., J. W. Reynolds, E. Madden, T. A. Lewis, and F. W. Snodgrass.

II. OPERATING PROCEDURE

When the computer power is turned on the desired programs may already be in the memory. If they are not, then they should be loaded from binary paper tape as described under Loading Diffractometer Programs.

The program is then started at location 0200, thus putting it into a loop to await further instructions. When the computer is in this waiting loop the RUN light is on, and the word 7070 is displayed in the AC.

Individual routines are then initiated by typing a keyboard signal which consists of a slash (/) followed (within ten seconds) by two characters. A list of the available routines follows, and details of their functions are given in Description of Keyboard Signals. Usually a keyboard signal will be put out on the printer after it is recognized as valid. There are a few interrupt signals (marked with an asterisk in the list) which are executed but not printed. Incorrect signals or signals for programs not currently in the memory will be ignored by the program.

After a routine is initiated it may call for data as specified in Description of Keyboard Signals. These should be typed as explained in Input Data Format. Upon completion of a routine the program returns to the waiting loop to await further instructions. It is also possible to terminate a routine at any time by typing another keyboard signal.

LOADING DIFFRACTOMETER PROGRAMS

To Load Binary Tapes:

1) Internal switch may be on either 6032 or 6004.
2) Set tape to be read into the reader.
3) Load address 7777 and press console START.
4) Turn on reader. Program reads the tape.
5) When final leader is reached, turn off reader. (If program stops itself and shows a non-zero accumulator, there has been a reader error. Turn off reader. Position the preceding section of leader under the reader, and repeat steps 3), 4) and 5).)
6) To load additional tapes, set tape to be read into the reader, and turn on reader. There is no need to restart the program.
7) When all tapes required for the desired program have been loaded, stop the loader program by pressing console STOP.

To Start Program:

1) Set internal switch to 6004.
2) Load address 0200 and press console START. Program outputs a carriage return, line feed and awaits keyboard signals. AC = 7070.

Basic Program

Tapes to be loaded in the following order:

1) Arithmetic and Input/Output
2) Interface

Set-up Program

Tapes to be loaded in the following order:

1) Arithmetic and Input/Output*
2) Interface*
3) Set-up Program
4) Any modifications desired

To change to calculating angles for parallel position, load in addition to the above tapes the subroutine ANG for parallel position.

To return to calculating angles in the bisecting position load the subroutine ANG for bisecting position. See notes on tape.

*Need not be reloaded if already in memory

Modifications Available for the Set-up Program

A. Azimuthal scan

The Azimuthal-Scan tape is for operation in the bisecting mode. For operation in the parallel mode, load in addition the Test of Omega in Parallel Position and subroutine ANG for parallel position.

To return to the bisecting mode, reload the Azimuthal-Scan tape and subroutine ANG for bisecting position.

B. Half-sphere search

C. Search for second reflection

(Both the Interface and Set-up programs must be restored after this modification has been used.)

D. Center Bragg angle

E. Matrix from three reflections

F. Cell parameters from matrix

G. Angle between two vectors

Least-Squares Program

Tapes to be loaded in the following order:

1) Arithmetic and Input/Output*
2) Least Squares
3) Constrain Subroutines. If the crystal which the data describe is cubic, tetragonal, hexagonal, or rhombohedral, load the corresponding segment of the Constrain-Subroutines tape.

To remove constraints previously set by one of the constrain subroutines, load the segment of the Constrain-Subroutines tape marked "To remove all constraints."

To return to either the set-up or data-collection program, the Interface tape must be loaded prior to loading the main program tape, and the angles must be reinitialized using /IT, etc.

Data-Collection Program

Tapes to be loaded in the following order:

1) Arithmetic and Input/Output*
2) Interface*
3) Data-Collection Program (Includes limits for a Supper goniometer head)

---

*Need not be reloaded if already in memory.

4) Limits for range routine to correspond to goniometer head which is being used.

5) User's Reject subroutine if desired.

6) Modification A or B if desired.

The Data-Collection tape is set for operation in the bisecting mode. To change to parallel mode, load in addition to the above tapes subroutines RNGE and ANG for parallel position and modify limits for range routine to correspond to goniometer head being used.

To return to data collection in the bisecting mode, load subroutines RNGE and ANG for bisecting position and modify limits for range routine to correspond to goniometer head being used.

Modifications Available for Data Collection

A. Data collection using omega scans

B. Data collection using peak-top counting

Data Collection for Specified Indices and Psi

Tapes to be loaded in the following order:

1) Arithmetic and Input/Output†

2) Interface†

3) Data Collection for Specified Indices and Psi

The tape for Data Collection for Specified Indices and Psi is set for operation in the bisecting mode. For operation in the parallel mode, load in addition to the above tapes the Modifications for Parallel Position.

†Need not be reloaded if already in memory.

DESCRIPTION OF KEYBOARD SIGNALS

Those marked with an asterisk (*) are interrupt signals which are not printed. An index appears on pages 10 and 11.

Basic

/SpaceSpace* Reinitialize
Immediately stop all motors, reinitialize the overall program, and await further instructions.

/OF Off
Terminate the program currently in progress and await further instructions.

(Description of Keyboard Signals is continued on page 12)

LIST OF KEYBOARD SIGNALS

Signals available for a given memory loading are indicated by X.

Signal	Name	Page reference	Program in memory: Basic	Set-up with modifications:							Least sq	Data coll:			Data psi
				A	B	C	D	E	F	G			A	B	
	Basic														
/Space	Space* Reinitialize	9	X	X	X	X	X	X	X	X	X	X	X	X	X
/OF	Off	9	X	X	X	X	X	X	X	X	X	X	X	X	X
/TY	Type	12	X	X	X	X	X	X	X	X	X	X	X	X	X
	Control of external equipment														
/SH	Shutter	12	X	X	X	X	X	X	X	X	X	.	X	X	X
/FL	Filters	12	X	X	X	X	X	X	X	X	X	.	X	X	X
/AT	Attenuators	12	X	X	X	X	X	X	X	X	X	.	X	X	X
	Initializing angles														
/IT	Initialize two theta	12	X	X	X	X	X	X	X	X	X	.	X	X	X
/IO	Initialize omega	12	X	X	X	X	X	X	X	X	X	.	X	X	X
/IC	Initialize chi	12	X	X	X	X	X	X	X	X	X	.	X	X	X
/IP	Initialize phi	12	X	X	X	X	X	X	X	X	X	.	X	X	X
/CK	Check angle readings	12	X	X	X	X	X	X	X	X	X	.	X	X	X
	Motor drives														
/PA	Print angles	13	X	X	X	X	X	X	X	X	X	.	X	X	X
/DT	Drive two theta	13	.	X	X	X	X	X	X	X	X	.	X	X	X
/DO	Drive omega	13	.	X	X	X	X	X	X	X	X	.	X	X	X
/DC	Drive chi	13	.	X	X	X	X	X	X	X	X	.	.	.	.
/DP	Drive phi	13	.	X	X	X	X	X	X	X	X	.	.	.	.
	Ratemeter and step scans														
/RT	Set counting time	13	.	X	X	X	X	X	X	X	X	.	.	.	.
/ST	Set two theta step	13	.	X	.	.	.	X	X	X	X	.	X	.	.	X
/SO	Set omega step	13	.	X	.	.	.	X	X	X	X	.	.	.	.
/SC	Set chi step	13	.	X	.	.	.	X	X	X	X	.	.	.	.
/SP	Set phi step	13	.	X	.	.	.	X	X	X	X	.	.	.	.
/CS	Clear all steps	13	.	X	.	.	.	X	X	X	X	.	X	X	X	X
/TN*	Teleprinter on	14	.	X	X	X	X	X	X	X	X	.	X	X	X	X
/TF*	Teleprinter off	14	.	X	X	X	X	X	X	X	X	.	X	X	X	X
/CN*	Chart recorder on	14	.	X	X	X	X	X	X	X	X	.	X	X	X	X
/CF*	Chart recorder off	14	.	X	X	X	X	X	X	X	X	.	X	X	X	X
/SS	Set recorder scale	14	.	X	X	.	X	X	X	X	X	.	.	.	.	.
/PS	Print recorder scale	14	.	X	X	.	X	X	X	X	X	.	X	X	.	X
/RN	Ratemeter on	14	.	X	.	.	.	X	X	X	X	.	.	.	.	.
/RF	Ratemeter off	14	.	X	X	X	X	X	X	X	X	.	.	.	.	.
	Azimuthal scans															
/AZ	Set psi zero	14	.	.	X	.	.	.	.	.	.	.	.	.	.	.
/SZ	Set psi increment	15	.	.	X	.	.	.	.	.	.	.	.	.	.	.
/RZ	Start azimuthal scan	15	.	.	X	.	.	.	.	.	.	.	.	.	.	.

*An interrupt signal which is executed but not printed.

LIST OF KEYBOARD SIGNALS

Signals available for a given memory loading are indicated by X.

Signal	Name	Page reference	Program in memory: Basic	Set-up with modifications:	A	B	C	D	E	F	G	Least sq	Data coll:	A	B	Data psi
	Preparation for angle calculations															
/CB	Calculate cell matrix	15	.	X	X	X	X	X	.	.	.	.	.	.	.	.
/CU	Calculate orientation matrix	15	.	X	X	X	X	X	.	.	.	.	.	.	.	.
/MT	Matrix from three reflections	15	.	.	.	.	.	.	X	.	.	.	.	.	.	.
/CA	Cell parameters from matrix	15	.	.	.	.	.	.	.	X	.	.	.	.	.	.
/WV	Wavelength input	16	.	.	.	.	.	.	X	X	.	.	.	.	.	X
	Angle calculations															
/IA	Calculate angles from indices	16	.	X	X	X	X	X	X	X	X	.	.	.	.	.
/DA	Drive to calculated angles	16	.	X	X	X	X	X	X	X	X	.	.	.	.	.
/VV	Angle between two vectors	16	.	.	.	.	.	.	.	.	X	.	.	.	.	.
	Peak finding															
/SR	Search for reflection	16	.	X	.	.	.	.	X	X	X	.	.	.	.	.
/CR	Center reflection	17	.	X	X	X	X	X	X	X	X	.	.	.	.	.
/PO	Punch observed angles	17	.	X	X	X	X	X	X	X	X	.	.	.	.	.
/HS	Half-sphere search	18	.	.	.	X	.	.	.	.	.	.	.	.	.	.
/BK*	Break into search	18	.	.	.	X	.	.	.	.	.	.	.	.	.	.
/CT	Continue search	18	.	.	.	X	.	.	.	.	.	.	.	.	.	.
/RS	Start ratemeter	18	.	.	.	X	X	.	.	.	.	.	.	.	.	.
/RE	Search for second reflection	18	.	.	.	.	X	.	.	.	.	.	.	.	.	.
/BG	Measure Bragg angle	19	.	.	.	.	.	X	.	.	.	.	.	.	.	.
	Least squares															
/RP	Read parameters	20	.	.	.	.	.	.	.	.	.	X	.	.	.	.
/RK	Read key integers	20	.	.	.	.	.	.	.	.	.	X	.	.	.	.
/RH	Read orientation indices	20	.	.	.	.	.	.	.	.	.	X	.	.	.	.
/RO	Read observations	21	.	.	.	.	.	.	.	.	.	X	.	.	.	.
/PP	Print parameters	21	.	.	.	.	.	.	.	.	.	X	.	.	.	.
/YC	Compute Y_c and compare	22	.	.	.	.	.	.	.	.	.	X	.	.	.	.
/LS	Least-squares cycle	22	.	.	.	.	.	.	.	.	.	X	.	.	.	.
/CM	Calculate new matrix	23	.	.	.	.	.	.	.	.	.	X	.	.	.	.
	Data collection															
/WA	Read wavelength and cell edges	23	.	.	.	.	.	.	.	.	.	.	X	X	X	.
/SD	Set up data collection	23	.	.	.	.	.	.	.	.	.	.	X	.	.	X
/SW	Set up for omega scans	23	.	.	.	.	.	.	.	.	.	.	.	X	.	.
/PK	Set up for peak-top counting	24	.	.	.	.	.	.	.	.	.	.	.	.	X	.
/IN	Initialize reflection number	24	.	.	.	.	.	.	.	.	.	.	X	X	X	.
/IR	Measure individual reflections	24	.	.	.	.	.	.	.	.	.	.	X	X	X	.
/CD	Collect data	25	.	.	.	.	.	.	.	.	.	.	X	X	X	.
/IS	Input standard reflections	26	.	.	.	.	.	.	.	.	.	.	X	X	X	.
/MS*	Measure standard next	26	.	.	.	.	.	.	.	.	.	.	X	X	X	X
/ID*	Interrupt data collection	26	.	.	.	.	.	.	.	.	.	.	X	X	X	.
/RD	Resume data collection	27	.	.	.	.	.	.	.	.	.	.	X	X	X	.
/ZS	Set up one standard reflection	27	.	.	.	.	.	.	.	.	.	.	.	.	.	X
/HP	Collect data at given psi	27	.	.	.	.	.	.	.	.	.	.	.	.	.	X

*An interrupt signal which is executed but not printed.

/TY Type
Allows the typing of comments, leader, etc. on the teleprinter/punch.

External equipment control

/SH Shutter
Open or close shutter.

Data: 0 to close shutter
1 to open shutter

/FL Filters
Set filters in or out.

		Filter 1	2
Data:	0	out	out
	1	out	in
	2	in	out
	3	in	in

/AT Attenuators
Set attenuators in or out.

		Attenuator 1	2	3
Data:	0	out	out	out
	1	out	out	in
	2	out	in	out
	3	out	in	in
	4	in	out	out
	5	in	out	in
	6	in	in	out
	7	in	in	in

Initializing angles

/IT Initialize two theta
Read into the computer the current two-theta dial setting.

Data: Two-theta dial reading in degrees and decimal fraction.

/IO Initialize omega
/IC Initialize chi
/IP Initialize phi
} Analogous to /IT

/CK Check angle readings
Motors are driven backward and then forward to check the photoelectric marker position. After this operation any errors in position should have been corrected. Final shaft position is the same as the nominal position before checking.

Output:

2θ marker*	2θ errors**	2θ serious errors***
ω marker	ω errors	ω serious errors
χ marker	χ errors	χ serious errors
ϕ marker	ϕ errors	ϕ serious errors

*Marker indicator should be zero; it is non-zero if no marker was received during this check operation.

**The number of times an error has been encountered since the last check-position procedure.

***The number of times an error of more than 0.05 degrees has been encountered since the last check-position procedure.

Motor drives

/PA Print angles
Print current settings of the four shafts in degrees.

Output: Two theta, omega, chi, phi

/DT Drive two theta
Drive two theta to specified position.

Data: Desired position in degrees and decimal fraction.

/DO Drive omega
/DC Drive chi
/DP Drive phi
} Analogous to /DT

Ratemeter and step scans

/RT Set ratemeter counting time
Read in time interval to be used by ratemeter program.

Data: Counting-time interval in seconds. This should be a multiple of 0.1 second and should not be more than 409.5 seconds.

/ST Set two-theta step size
Set up for a step scan in which two theta is incremented after each count.

Data: Two-theta interval in degrees and decimal fraction. This may be positive or negative.

/SO Set omega step size
/SC Set chi step size
/SP Set phi step size
} Analogous to /ST

/CS Clear all steps
Set the step size to zero for all four shafts.

/TN* Teleprinter on
Set indicator so that ratemeter will print on teleprinter.

/TF* Teleprinter off
Set indicator so that ratemeter will not print on teleprinter.

/CN* Chart recorder on
Set indicator so that ratemeter will record on chart.

/CF* Chart recorder off
Set indicator so that ratemeter will not record on chart.

/SS Set chart-recorder scale

Data: The count which is to cause a full-scale chart reading.

/PS Print chart-recorder scale

Output: The count which causes a full-scale chart reading.

/RN Ratemeter on
If the ratemeter program is interrupted by certain other keyboard signals, it is automatically re-entered upon completion of these operations.

Prerequisites: /RT and other signals to set up desired conditions.

Output: A_1, C_1, C_2, C_3 ..... C_{10}

A_{11}, C_{11}, C_{12}, C_{13}, etc.

A_i is the angle setting for the shaft being stepped. If two are being stepped it is the last one for which the step size was set. If none is being stepped A is omitted. C_i is the count for one time interval.

/RF Ratemeter off
Terminate ratemeter program and await further instructions.

<u>Azimuthal scans</u>

/AZ Set psi at zero
Define the current instrument position as psi zero and set up the instrument angle matrix, $\underset{\sim}{R}_0$.

Output: Current angles, 2θ, ω, χ, ϕ

Limitation: /AZ destroys the psi matrix set up by /SZ; therefore /AZ should be executed before /SZ.

/SZ Set up psi-increment matrix

Prerequisite: /AZ

Input: Increment for psi in degrees.

/RZ Start azimuthal scan

Prerequisites: /RT, /SS, /TN or /TF, /CN or /CF, /AZ, /SZ

Output: ψ_1, C_1, C_2, ... C_{10}

ψ_{11}, C_{11}, C_{12}, etc., until computed settings are out of range.

Preparation for angle calculations

/CB Calculate matrix $\underset{\sim}{B}$

Read wavelength and cell parameters and calculate the cartesian transformation matrix $\underset{\sim}{B}$.

Data: λ, a, b, c, $\cos\alpha$, $\cos\beta$, $\cos\gamma$.

/CU Calculate the matrix $\underset{\sim}{UB}$

Read the orientation information and obtain the transformation matrix $\underset{\sim}{UB}$.

Prerequisite: /CB

Data: 1) h_1, k_1, ℓ_1, ω_1, χ_1, ϕ_1 for the primary orienting reflection.

2) h_2, k_2, ℓ_2, ω_2, χ_2, ϕ_2 for the secondary orienting reflection.

/MT Matrix from three reflections

Given the instrument angles and indices for three reflections, compute the transformation matrix $\underset{\sim}{UB}$. (High-angle reflections should be used to obtain an accurate matrix.)

Prerequisite: /WV

Data: h_i, k_i, ℓ_i, $2\theta_i$, ω_i, χ_i, ϕ_i for i = 1,2,3.

Output: a) The letter "S" if the matrix whose columns are the given indices is singular.

b) The letter "L" if the data describe a left-handed coordinate system.

c) No output for normal return.

/CA Compute cell parameters from matrix

Given the transformation matrix $\underset{\sim}{UB}$, compute the cell parameters a, b, c, $\cos\alpha$, $\cos\beta$, $\cos\gamma$.

Prerequisites: /CB and /CU,
or /MT,
or /CM

Output: a, b, c, $\cos\alpha$, $\cos\beta$, $\cos\gamma$.

/WV Wavelength input
Read in wavelength.

Data: Wavelength in angstroms.

Angle calculations

/IA Individual angles
Calculate setting angles given the indices of a reflection. This program computes angles in either the bisecting or parallel position depending on which paper tapes have been loaded.

Prerequisites: /CB and /CU,
or /WV and /MT,
or /CM and /WV

Data: h, k, ℓ (It is permissible to use non-integral values of these indices for special purposes.)

Output: 2θ, ω, χ, ϕ. (Output of $2\theta = 0$ means $\sin\theta > 1$.)

/DA Drive to calculated angles
Drive all shafts to previously calculated angle settings.

Prerequisite: /IA

/VV Calculate the angle between two vectors
Given instrument angles ω, χ, and ϕ for each of two reflections, compute the angle between these vectors. The input data may be either observed angles or angles calculated using /IA. The purpose of this program is to provide a means of checking a proposed assignment of indices to observed reflections.

Data: ω_1, χ_1, ϕ_1, ω_2, χ_2, ϕ_2.

Output: The angle subtended by the two vectors.

Limitations: After /VV is loaded /IA may be used, but /CB and /CU are no longer available.

Round-off error has an appreciable effect on output angles less than two degrees.

Peak finding

/SR Search for reflection

Data: 1) Indicator of which motor is to slew:
1 for 2θ 3 for χ
2 for ω 4 for ϕ

2) Limits between which the motor is to alternate:
a) Angle at which it is to start.
b) Angle to which it is to drive.

3) Indicator of which motor is to step:
   0 for no stepping, then skip to input 6)
   1 for 2θ
   2 for ω
   3 for χ
   4 for ϕ

4) Limits for stepping motor: (Omit if 3) = 0.)
   a) Starting angle.
   b) Angle to step toward.

5) Increment for stepping motor (in degrees). (Omit if 3) = 0.)

6) Minimum count (for 0.1 sec) at which to stop.

Output: If the minimum count is found: 2θ, ω, χ, ϕ; if not found, no output.

/CR Center reflection

Starting with some intensity from a reflection, maximize the Bragg condition and center it in the counter aperture.

Data:
1) 0 if check to be sure that most of the reflection is entering the counter aperture is <u>not</u> to be performed;
   1 if check is to be performed.

2) 0 for chi search;
   1 for phi search.

3) 0 for <u>no</u> omega scan during χ (or ϕ) search;
   1 for omega scan during χ (or ϕ) search.

Output: Resulting 2θ, ω, χ, ϕ.

Cautions: The peak intensity must be at least twice the background.

The program assumes that the maximum intensity in an omega scan is well defined. This requires that the crystal have a regular, not excessively broad, mosaic distribution. Reducing the take-off angle and narrowing the counter slit improves the precision.

/PO Punch observed angles

To prepare input tape of observations for least-squares program.

Instructions:

1) When diffractometer is set to a position which is to be used as an observation for the least-squares program, execute /PO.

2) Turn on punch. For initial observation on the tape, punch leader by means of the HERE IS key.

3) Type on the keyboard ΣT'', as described under /RO (usually 14 in bisecting position; 22 in parallel position), and the indices, h, k, ℓ, for the current position.

   The program then will output the current instrument angles and leader.

4) Turn off punch.

Repeat the above procedure for each observation. The maximum number of reflections accepted by the least-squares program is 12.

/HS Half-sphere search

Search half-sphere of reciprocal space for counts greater than or equal to a specified minimum.

Data:
1) 2θ at which to begin search
2) 2θ max
3) Increment for 2θ
4) Increment for χ
5) Minimum count (see below)

Output: Current 2θ, ω, χ, and ϕ each time a count greater than or equal to the minimum is accumulated in 0.1 seconds.

/BK* Break into half-sphere search

Interrupt half-sphere search following completion of next ω drive.

Prerequisite: /HS.

/CT Continue half-sphere search

Resume half-sphere search where interrupted by /BK.

Prerequisite: /BK.

/RS Turn on ratemeter

This modified ratemeter program is similar to /RN but does not permit step scanning or chart recording.

Prerequisites: /RT, /TN

Output: Same as for /RN

/RE Search for second reflection

Scan a circle in reciprocal space to find another reflection when one reflection (of known indices) has been found and when the cell parameters are known.

Prerequisites: /SH, /CB, /CU

The data for /CU must use the known reflection for the primary orienting reflection. The secondary orienting reflection should be a hypothetical reflection (not parallel to the first) with arbitrary values chosen for its angles.

Input: 1) Indices of the known reflection.

2) Indices of the reflection to be sought.

3) Angular increment used to define steps on the circular path in reciprocal space (degrees and decimal fraction). (See discussion below.)

4) Minimum count rate in counts per tenth second. This should be an integer greater than zero.

Output: 2θ, ω, χ, ϕ, and the largest tenth-second count for each step during which the count exceeded the limiting value (input 4) for any tenth-second interval. The angles are those at the end of the step.

Discussion: Because the count rate is measured almost continuously while the motors are driving, it is possible to make the angular increment (input 3) fairly large. If the known and unknown scattering vectors are nearly perpendicular an increment of 2 degrees may be satisfactory. When these vectors are more nearly parallel or antiparallel the increment may be increased to 5 or 10 degrees.

The recorded positions represent the endpoints of steps during which intensity was found and are not necessarily near the best positions. In order to locate the best position more closely execute a /CU using the known reflection as before and using the desired reflection as the secondary input with angles from the above output. This causes the next /RE to start the search at this position. Using a smaller angular increment with a negative sign for input (3) will cause the program to make small steps back across the region in which the intensity was previously found.

/BG Measure Bragg angle

Assuming that the user has reduced the counter aperture to a narrow slit, this program measures a Bragg angle by performing two kinds of centering operations in sequence. The first is a 2θ scan to choose a Bragg angle associated with a particular wavelength. The second is a scan for which $\Delta 2\theta = 2\Delta\omega$ so that it is effectively a scan across the focal spot of the X-ray tube using the chosen wavelength. In each case the center is taken as the average of the high and low positions at which the intensity has fallen to a specified fraction of the maximum value. In the second type of scan the program always sets ω before setting 2θ in order to minimize errors introduced by the 2θ, ω gear train.

Data: 1) Number of seconds to count at each step. This should be a multiple of 0.1 second and should not be greater than 409.5 seconds.

2) Fraction of the maximum count to locate on each side of the maximum count.

Output: Resulting 2θ, ω, χ, ϕ.

Limitation: There must initially be some intensity to be counted.

Least Squares

/RP Read parameters

Input: 13 parameters, P(I), in the following order:

1) λ, wavelength
2) a
3) b
4) c
5) cos α
6) cos β
7) cos γ

} Cell parameters

8) ω_1
9) χ_1
10) ϕ_1

} Angles of primary orienting reflection

11) ω_2
12) χ_2
13) ϕ_2

} Angles of secondary orienting reflection

/RK Read key integers and compute number of variables

Input: 13 integers, KI(I), I = 1 to 13. KI(I) = 0 if P(I) is not to be varied; KI(I) $\neq$ 0 if P(I) is to be varied.

Limitations: A maximum of 9 parameters can be varied. The proper choice of these variables is discussed by Busing & Levy, (1967), Acta Cryst. 22, 457 and ORNL-4054.

For adjusting the orientation a simple procedure which should always work is the following:

1) Choose two orienting reflections which have ω's and χ's near zero and ϕ's which differ by about ninety degrees. These need not be the reflections originally used in the /CU nor need they be reflections included in the list of observations. Their input angles may be calculated with an /IA, if necessary.

2) Vary χ_1, ϕ_1, and χ_2 in the least-squares refinement.

/RH Read indices of orienting reflections

Input: h_1, k_1, ℓ_1, indices of primary orienting reflection.
h_2, k_2, ℓ_2, indices of secondary orienting reflection.

/RO Read observations

Read data for up to 12 reflections.

Input for each reflection:

1) $\Sigma T''$ (see below)
2) h
3) k
4) ℓ

} Indices of the reflection

5) 2θ
6) ω
7) χ
8) ϕ

} Observed angles of the reflection

$\Sigma T''$ is an integer which designates the way in which the reflection is to be used. It is the sum of the values of T'' in the following table which correspond to the types desired.

T	T′	Explanation	T″
6	0	2θ observation of Bragg condition for 3-circle instrument	1
5	1	ω observation of Bragg condition for 4-circle instrument	2
1	2	2θ observation for centering in counter, i.e., true 2θ for 3- or 4-circle instrument	4
3	3	χ observation for centering in counter for 3- or 4-circle instrument	8
4	4	ϕ observation for centering in counter for 4-circle instrument	16

T' corresponds to TYIND which is used internally by the program and printed as output.

T corresponds to type as used in Busing & Levy, 1967. Acta Cryst. 22, 457 and in ORNL-4054.

For observations obtained with /CR, $\Sigma T''$ will generally be 14 if the instrument is in the bisecting position, or 22 if the parallel position is used. If the $\Sigma T''$ is zero the reflection will not be included at all.

/PP Print key integers and parameters

Output:

KI(1)	P(1)
KI(2)	P(2)
.	.
.	.
.	.
KI(13)	P(13)

/YC Compute Y_c
Compare Y_c with the observation, Y_o, but do not adjust parameters.

Prerequisites: /RP, /RH, /RO

Example of output:

Y_o	Y_c	Y_o-Y_c	Number	T'	H	K	L		
-0.2300	-0.2397	0.0097	1	1	3	19	4		
			125.0900		-0.2300		19.6500	19.3700	
125.0900	125.0704	0.0196	2	2	3	19	4		
			125.0900		-0.2300		19.6500	19.3700	
.	.	.	.		.		.	.	
.	.	.	.		.		.	.	
133.3700	133.3598	0.0102	17	2	3	5	-15		
			133.3700		-71.4300		90.0000	18.9300	
18.9300	18.8982	0.0318	18	4	3	5	-15		
			133.3700		-71.4300		90.0000	18.9300	
0.0087	0.0268		$2\theta_o$		ω_o		χ_o	ϕ_o	
$\Sigma(Y_o-Y_c)^2$	$\sqrt{\Sigma(Y_o-Y_c)^2/F}$								

(F = number of degrees of freedom.)

/LS Perform least-squares cycle

Prerequisites: /RP, /RK, /RH, /RO

Output: Same as for /YC followed by:

Old P(I)	Change	New P(I)	Error
1.5405		1.5405	
7.1936	-0.0007	7.1929	0.00081
18.3711	0.0003	18.3715	0.00247
13.8475	0.0015	13.8490	0.00093
0.0000		0.0000	
0.0000		0.0000	
0.0000		0.0000	
-0.2300		-0.2300	
19.6500	-0.0091	19.6409	0.01540
19.3700	0.0089	19.3789	0.01336
-0.1900		-0.1900	
7.9000	0.0096	7.9096	0.01462
86.0950		86.0950	

If the matrix is found to have a zero diagonal element, the number of that diagonal element is printed, and the program goes to the waiting loop. If the matrix is found to be singular by the matrix inverter, the letter "S" is printed, and the program goes to the waiting loop.

/CM Calculate new matrix

Set up matrix $\underset{\sim}{UB}$ using the latest least-squares parameters. This matrix is then available to the data-collection and angle-calculating routines.

Note that after least-squares refinement it is necessary to reload the Interface program and to reinitialize the angles with /IT, etc.

Data collection

/WA Wavelength and cell edges

Read in wavelength and cell edges.

Data: λ, a, b, c

/SD Set up data collection

Prepare for collecting data using a $\theta, 2\theta$ step scan.

Data:
1) Counting time interval for each step in seconds. This should be a multiple of 0.1 second and should not be greater than 409.5 seconds.
2) Count which is to cause a full-scale chart reading.
3) Ratio of counting time for background to counting time for each step. (Background counting time should not exceed 409.5 seconds.)
4) Base width of peak in degrees of 2θ.
5) 114.6 $\Delta\lambda/\lambda$
(For λ of CuKα_1 and $\Delta\lambda$ corresponding to $\alpha_2 - \alpha_1$, this quantity is 0.285. For MoKα_1 the same quantity is 0.692. For AgKα_1 it is 0.904.)

/SW Set up for omega scans

Prepare to collect data by making three omega scans for each reflection, one at the peak and two with 2θ offset to measure background.

The counter slit should be set so that the scans do not overlap but the full spectrum desired is admitted. In choosing $\Delta(2\theta)$, take into account the spectral regions (filter edge, β line, etc.) to be excluded. Running without a filter is probably best.

Data:
1) Counting-time interval for each step in seconds. This should be a multiple of 0.1 second and should not be greater than 409.5 seconds.
2) Count which is to cause a full-scale chart reading.

3) $\Delta(2\theta)$, the size of counter offset for background scans.

4) BW, base width of peak, the total range of omega to be included in each scan.

5) $\Delta\omega$, the step size of omega.

/PK Set up for peak-top counting

Prepare for rapid data collection. Each reflection will be sampled at the peak and in the background for the minimum counting time. The time required to obtain the desired fractional standard deviation is then calculated from the sampled counting rates and the counting statistics. If this is less than a specified maximum, the program proceeds to measure the background at two points and the peak top at three points. For reflections so weak that the desired accuracy cannot be obtained in the maximum time the same procedure is followed using only the minimum time for each of the five counts. In this case the resulting standard deviation will be large.

Set $\lambda = (\lambda_{\alpha 1} + \lambda_{\alpha 2})/2$ using /WA.

Data: The figures in parentheses are representative values of the input parameters.

1) Counting rate for full-scale chart reading in counts per tenth second.

2) Desired fractional standard deviation in net count rate. (0.03)

3) Maximum time to be spent on a reflection in tenth seconds. (1200)

4) Amount by which 2θ is to be offset from calculated Bragg condition for background counts, degrees. (1.0)

5) Interval in 2θ between the three points on the peak top, degrees. (0.01)

6) Minimum time in tenth seconds for counting or sampling. (20)

/IN Initialize reflection number

Set the initial value for the number of the reflection measured by a data-collection program (/IR or /CD).

Data: Integer to be assigned to the first reflection measured when a data-collection program is entered.

/IR Individual reflections

Collect data for reflections given their indices. This program makes settings in either the bisecting or parallel position depending on which paper tapes have been loaded.

Prerequisites: Same as for /CD below.

Data: For each reflection to be measured:
Line feed, h, k, ℓ

If indices are not preceded by a "line feed," #E is printed and all input is ignored until a "line feed" is encountered. This minimizes the effect of errors made by the paper-tape reader.

Output: Same as for /CD below.

/CD Collect data

Generate indices and collect data for reflections in a specified range of 2θ. This program makes settings in either the bisecting or parallel position depending on which paper tapes have been loaded.

Reflections with certain combinations of indices may be rejected by means of a subroutine prepared by the user. Specifications for this routine are given in another section.

Prerequisites: /CB and /CU, or /CM and /WA, or /MT and /CA; /CS and /ST and /SD, or /SW, or /WA and /PK; /IN; /TN or /TF; /CN or /CF; /IS (if desired)

Data:
1) 2θ(max), 2θ(min)
2) h(max), h(min). These are additional limits on the allowed values of h. For all values set h(max) = 100, h(min) = -100. For Okℓ zone set h(max) = h(min) = 0.
3) k(max), k(min)
4) ℓ(max), ℓ(min)
5) r, the restart indicator. If r = 0 the program scans all reflections included. If r $\neq$ 0 the program reads h_i, k_i, ℓ_i and starts data collection with this reflection. These indices must be within the limits defined by inputs (1) and (2) above. (Terminate r or ℓ_i with a carriage return.)

Output for each reflection when /SD is used:

#I h, k, ℓ, 2θ, ω, χ, ϕ

$$\left.\begin{array}{l}
\#B \\
2\theta_{bkg_1},\ C_{bkg_1} \\
\#D \\
2\theta_1,\ C_1,\ C_2,\ C_3, \ldots,\ C_{10} \\
2\theta_{11},\ C_{11},\ C_{12},\ \text{etc.} \\
\vdots \\
\#B \\
2\theta_{bkg_2},\ C_{bkg_2}
\end{array}\right\}\ \text{Suppressed by /TF}$$

#R Number of steps, net count, standard errors, reflection sequence number. (All net counts are corrected for the dead time specified by the constant DEDTM.)

Output when /SW is used:

#I as above

#D repeated three times as above if not suppressed by /TF.

#R number of steps, net count, standard error, reflection sequence number, first background total count, second background total count.

Output when /PK is used:

#I as above

2θ, peak sample
2θ, background sample
2θ, background 1, background 2
2θ, peak count 1, peak count 2, peak count 3

} Suppressed by /TF

#R time spent on peak in tenth seconds, net rate in counts per 100 sec, standard error of net rate, reflection sequence number, time spent on background in tenth seconds.

/IS Input standard reflections

Set up standard reflections to be measured periodically.

Data: 1) N, the number of standards ($0 \leqslant N \leqslant 3$)

2) Period of standards

3) Indices of the standards:

h_1, k_1, ℓ_1
.
.
.
h_N, k_N, ℓ_N

/MS* Measure standard reflections

Collect data for the standard reflections after completing the current reflection and then check position.

Prerequisites: /IS, /CD or /IR.

Output: Same as for /CD or /IR preceded by #S and followed by #C and results of check procedure.

/ID* Interrupt data collection

Interrupt data collection after completing the current reflection and await further instructions.

Prerequisites: /CD or /IR.

/RD Resume data collection

Continue collecting data, starting at point of interruption by /ID.

Prerequisite: /ID

Limitation: Neither /CD nor /IR may have been executed since the interruption by /ID.

/ZS Set up one standard reflection

This signal is used to input one standard reflection for use with /HP.

Data: 1) 0 for no standard;
1 for one standard.

2) Period of standard

3) Indices h, k, ℓ of standard

/HP Collect data at given psi

Given the indices h, k, and ℓ and a value of the azimuthal angle psi, collect data by the $\theta, 2\theta$ step-scan method.

This program will usually be used in conjunction with a program for a large computer which calculates the desired azimuthal angles. Psi is defined using the hypothetical reflection (0 1 10000) as a reference as described elsewhere. (Busing & Levy, 1967. Acta Cryst. 22, 457 or ORNL-4054).

Prerequisites: /CB and /CU, or /CM, or /MT; /CS, /ST, /SD, /WV, /SH, and /ZS (if desired); /TN or /TF; /CN or /CF

Data: For each reflection to be measured:
Line feed, h, k, ℓ, psi (degrees)

Output: Same as for /IR or /CD except that if the setting is out of range of the diffractometer the only output is:

#N #I h, k, ℓ, 2θ, ω, χ, ϕ

INPUT DATA FORMAT

When a program calls for input the user may type any number of spaces, carriage returns, or letters before each number. These are reproduced on the teleprinter but ignored by the program. The input number starts with the first digit, minus sign, or decimal point which is typed. Thereafter the number is accumulated until it is terminated by a non-digit — usually a space or carriage return.

The data required by the program may be either integers or floating-point numbers. One decimal point is permitted (but not required) in a floating-point number, but a decimal point terminates an integer.

The typing of a rubout at any time before terminating a number causes the program to start that number over again when the next digit, minus sign, or decimal point is typed.

The program signals a call for input by displaying the word 7000 in the AC. At this time the paper-tape reader is enabled so that data can be read from tape if desired. All input called for in this way is printed. Input not called for by the program is not printed and is ignored by the program.

Examples

Let ␣ and ⏎ represent a space and carriage return, respectively. Possible ways of typing the floating-point numbers 2.000 and 0.375 in succession include the following:

```
2␣␣␣.375␣
2.␣0.375␣
+2.000⏎0.37500⏎
⏎⏎A=2.0␣␣B=0.375␣
```

Ways of typing the integer -12 include the following:

```
-12␣
-12.
⏎␣H␣=␣-12⏎
```

REJECTION TEST FOR DATA COLLECTION

The user may reject certain combinations of indices generated by /CD by supplying a subroutine REJ prepared as described below. A dummy REJ which accepts all reflections is included in the data collection programs, and an example of REJ for space group $R\bar{3}$ is included in the program listings.

REJ is called only by /CD and it does not affect /IR, nor does it reject standard reflections.

Specifications:

1) When REJ is called the fixed-point indices H, K, and L are in locations 103, 104, and 105, respectively, on page zero. The AC is clear.

2) The calling sequence in the main program is:

```
JMS REJ
(Return if rejected)
(Return if accepted)
```

3) The subroutine must start with a standard entry at location 3554.

```
*3554
REJ, 0
(Start of subroutine)
```

4) If the reflection is to be rejected the subroutine should execute

```
JMP I REJ
```

5) If the reflection is to be accepted the subroutine should execute

```
ISZ REJ
JMP I REJ
```

6) Locations 3554-3575 (18_{10} locations) are available for this subroutine. If more space is needed the user should consult the table of memory allocation.

7) The subroutine may be written in PAL and assembled to produce a binary paper tape. Alternatively it can be converted to octal by inspection and loaded by means of the switch register.

TYPICAL DATA-COLLECTION PROCEDURES

We will outline briefly some procedures which have been found to be useful for mounting a sample and collecting intensity data with this instrument.

Initializing instrument angles

The interface program as loaded has zero for the current value of each instrument angle. Executing /CK therefore

causes all angles to be set to integral degree positions which makes it easier to read the dials. Two theta is read first and entered with /IT. Driving two theta to a multiple of 10 or 20 degrees simplifies the reading of omega. The omega, chi, and phi readings are then entered. The phi dials may be difficult to read and should be checked by driving to some multiple of three degrees.

Mounting and centering the sample

The sample may be mounted on any conventional goniometer head which has suitable height and translation adjustments. The goniometer arcs are not needed, however, and we often use a simplified mount developed in this laboratory.

The adjustment of height and centering is most easily accomplished by disengaging the chi and phi worms so that these angles may be rapidly turned through 180 degrees while the sample is observed with the microscope. Before disengaging these shafts it is desirable to drive chi and phi to suitable settings such as 30 and zero degrees, respectively. The motors should remain energized. After centering is completed chi should be re-engaged at its original setting and left in this position while phi is engaged. This insures that the phi dial and drum will remain consistent with each other.

Determining the sample orientation

Usually the sample will have been examined by photographic X-ray methods so that the approximate lattice parameters will be known. These are read into the computer with the /CB program. /CU should then be executed, using either the approximate settings for two reflections as estimated from the photographs or completely hypothetical settings such as

h	k	ℓ	ω	χ	ϕ
1	0	0	0	0	0
0	1	0	0	0	90.

This permits the /IA command to be used to compute the angles

for some reflection which is thought to be strong enough to locate easily. Note that the program sets up a right-handed coordinate system and the indices of the orienting reflections should be chosen with this in mind.

The instrument is driven to the calculated angles using /DA if the input to /CU is thought to be approximately correct. If hypothetical settings were input to /CU then only the calculated two theta is correct. Omega should be set to zero, and chi and phi are set to estimated values for the desired reflection. After the shutter is opened with /SH, the presence of the reflection may be detected either on the hardware ratemeter or by means of the signals /RT, /CS, /TN, and /RN with a counting time of one or two seconds.

Usually it will be necessary to search further for the reflection by using /SR to slew omega through 10 or 20 degrees and to step chi through a similar interval in steps of two or three degrees. The counter aperture should be wide open during this search.

After some intensity has been found the reflection can be centered using /CR. Because the instrument is in the bisecting position the 1 0 0 option of /CR is used when the reflection has just been found. After the first centering the counter aperture can be reduced somewhat and the 0 0 0 option can be used.

After two reflections have been indexed, located, and centered in this way the /CU program is executed again using the observed angles as input. /IA and /DA can then be used to find other reflections and /CR can be used to center them. This provides a check on the identification of the orienting reflections, and the agreement between the observed and calculated angles is a measure of the accuracy of the lattice parameters and the initial orientation.

Some experimenters find that the orienting reflections can be located readily by manually moving chi and phi while

these worms are disengaged. In this case the use of /SR can be omitted.

Occasionally the orientation or lattice parameters are so poorly known that no reflections can be found with /SR. Under these circumstances it may be desirable to use /HS to search a hemispherical shell of reciprocal space. If the Bragg angle of the desired reflection is known it is used to set the initial value of two theta. Otherwise two theta is stepped through a sequence of positions two to four degrees apart. The stepping interval for chi may be as large as four degrees at low Bragg angles provided that the counter aperture is made as large as possible. This search requires from half an hour to an hour for each value of two theta, but after it is started no attention is needed from the user. The search may be interrupted at any time using /BK, and /CR may be used to center on possible reflections. The search can then be resumed with /CT. After one reflection has been found and if the lattice parameters are known, then /RE may provide a faster way of locating a second reflection.

When there is no filter in the X-ray beam /HS or /SR can locate streaks of continuous radiation for strong reflections. These can then be scanned in two theta to find the Bragg peaks.

It is also possible to use /HS to find equivalent reflections (identified by intensity and Bragg angle) and thus to find the symmetry elements of the crystal. This simplifies the problem of assigning the indices correctly.

In checking the assignment of indices to observed reflections it may be useful to use the program /VV which calculates the angle between two vectors each defined by a set of instrument angles omega, chi, and phi. The angle between two observed vectors can thus be compared with the theoretical angle calculated by /VV from outputs of /IA.

If the lattice parameters are unknown then three reflections found by /HS and /CR can be assigned indices

arbitrarily and used in /MT to set up a matrix. /IA and /DA can then be used to locate other reflections. For this purpose it is permissible to use non-integral indices as input to /IA. After a matrix has been set up with /MT the corresponding lattice parameters can be obtained by using /CA.

Observations for least-squares refinement

Before beginning the data collection it is usually advisable to improve the observed lattice constants and the orientation parameters using a least-squares refinement. For this purpose /CR is used to determine the observed instrument angles for up to twelve reflections. Each reflection can contribute three observations to the refinement. After the /CR operation /PO is used to punch the current instrument setting onto paper tape for later use. Any mistakes made in this operation can be corrected either when the tape is used or by reproducing the tape with /TY.

For best results the observations should be made at a high enough value of two theta for the α-doublet to be resolved. It may be desirable to make a theta-two theta scan using /RT, /ST, /TN, /SS, /CN, and /RN to verify that it is the α_1 reflection which has been found. In this case two theta must be reset before executing /PO.

In order to find high-angle reflections strong enough to be accurately centered it may be useful to use /CD to make a rapid data collection over a narrow range of two theta. Coarse steps and short counting times can be used for this preliminary survey.

If it is necessary to make /CR measurements on weak reflections it is possible to increase the counting time and thus to improve the statistics. To do this the integer CT (location 3727) is set at -N (octal) where N is the desired counting time in tenths of seconds.

Least-squares refinement

Before loading the least-squares program it is desirable to execute a /PA to record the current angle positions. The interface program must be reloaded after the least-squares calculation is completed, and having this record makes it easier to initialize the angles again. At this time it may also be useful to use /IA to aid in the selection of two orienting reflections for use in the refinement. The requirements for these reflections are described under /RK in the Description of Keyboard Signals.

The least-squares program is loaded and the signals /RP, /RK, and /RH are executed. /RO is used to read the observations from paper tape, and /PP can be used to print the trial parameters and key integers. /LS is then used to initiate a cycle of least-squares refinement, and the observed and calculated quantities are compared to verify that no blunders have been made in the input data. One or more cycles are executed until the parameter changes become small. Presumably the observed and calculated quantities will then be in reasonable agreement. The refined lattice parameters can be printed to five decimal places by executing /PP, and the signal /CM is used to store the matrix for use by other programs. Executing /CM is equivalent to executing /CB and /CU with the refined parameters.

After completion of the least-squares refinement the interface program must be reloaded and the angles should be initialized again with /IT, etc.

Data collection

For data collection using theta-two theta step scans the X-ray target take-off angle is usually increased to about three degrees. A β filter may be used at the discretion of the experimenter.

No provision is made in the data-collection programs for generating the angle-calculation matrix. This should therefore be computed either with /CB and /CU or with /CM before

loading the data-collection program. Alternatively /MT may be used provided that /CA is also executed.

The data-collection program and any desired modifications are then loaded. If a rejection test is to be used it can be switched in by hand or read from tape any time before /CD is started.

If the matrix has been loaded with /CM, then /WA must be executed. /CN turns on the chart recorder, and /CS, /ST, and /SD are used to set various parameters. A step of 0.05 degrees two theta and a counting time of two seconds are often satisfactory. It may be desirable to make preliminary scans of a few reflections using /IR in order to check the scale setting of the chart recorder and the peak-width parameter. /TN will cause the values of the individual counts to be printed, although these are usually suppressed by /TF in the actual data collection.

Up to three standard reflections can be selected with /IS, although one is usually enough. Calling for the standards after every 20 to 40 reflections should be satisfactory. /IN is used to set the initial value of the reflection sequence number.

The punch is turned on manually and leader is prepared by executing /TY and pushing the "HERE IS" key several times. It is desirable to record the standard reflections at the start of a run, which can be done by typing /MS and /IR. After completion of the standards and the motor-drive check, /CD can be executed to proceed with the data collection.

Typing /ID interrupts the data collection when the current reflection is completed, and this permits the user to change the paper tape or chart paper. While /CD is interrupted /TY can be used to punch leader and to type comments on the printout. Data collection is resumed by executing /RD. In case of a long interruption which requires the data-collection programs to be reloaded, the run can still be started with any desired reflection by using the restart option of /CD.

It is often desirable to divide the data collection into successive limited ranges of two theta. This permits the β filter to be removed for reflections at higher two theta, for example.

After the two-theta limit of the bisecting mode has been reached, the instrument is placed in the parallel position by manually rotating the counter on its support and driving two theta and omega appropriately. The program modifications for the parallel mode are loaded, a standard reflection is chosen, and data collection is continued using /CD. It is usually possible to find a standard reflection for use in the parallel mode which is also accessible in the bisecting position. Such a reflection will have a scattering vector nearly perpendicular to the phi axis; in the bisecting mode it will have a chi near zero and a two theta near the upper limit.

The way in which the theta-two theta step-scan program treats the background may be in error for low-angle reflections because of the effect of the absorption edge of the β filter. These reflections are therefore usually measured without a filter using the omega-scan modification.

Data can be collected more rapidly but less accurately by using the modification for peak-top counting. This technique may be useful for certain types of problems.

Various parts of the output of the data-collection programs are labelled with a # followed by a single letter. For example, #I denotes indices and angles, #R indicates results, #S denotes a standard reflection, and #C indicates the results of a motor-drive check. The program for the large computer which processes the paper-tape output uses these labels to identify the relevant information. In this way comments and input data which may have been punched on the tape are ignored by the processor program.

Renninger Effect

After the crystal structure has been solved and refined it may be apparent that there are some discrepancies between

observed and calculated structure factors which remain to be explained. Some of these, particularly for weak reflections which were observed as more intense than they calculate, may be caused by multiple reflection (Renninger effect). An easy test for this effect is to see whether the intensity depends markedly on the rotation of the sample about the reflecting-plane normal.

The set-up program is loaded with the azimuthal-scan modification and initialized with /RT, /SS, /CN, and /TN. The reflection in question is located with /IA and /DA, and /AZ and /SZ are used to set up the scan. An increment of 0.1 degrees in psi may be satisfactory. The scan is then started with /RZ. If the Renninger effect is present, it will produce peaks which are fairly sharp functions of psi.

A program (such as UMWEG written by H. L. Yakel of this Laboratory) for a large computer can be used to analyze these multiple reflection effects and predict safe values of psi to be used for data collection. In principle the program /HP is then available to obtain integrated intensities at these specified psi values, but we have not yet used this program in practice.

III. DESCRIPTION OF THE INTERFACE

We will now describe in some detail the interface which enables the computer program to control the diffractometer. In our discussion we will find it convenient to consider both the electronic circuitry (the hardware) and the computer programs (the software) of the interface together.

Figure 2 shows an overall schematic flow chart of the computer programs. These fall into two categories: the main programs which perform arithmetic and control the overall operation of the instrument, and the interrupt programs which interact directly with the hardware. A main program is initiated by the user by means of a keyboard signal, and main

programs may require from a few seconds to several days for completion. An interrupt program is usually initiated by the hardware and is probably completed in less than a millisecond. An interrupt program has priority over the main program but returns control to the main program upon termination. Only one main program and one interrupt program can be activated at the same time. When an interrupt is signaled by the hardware, the program determines the source of this signal and jumps to the appropriate interrupt program. The processing of any further interrupt signals is delayed until completion of the current interrupt program. The interrupt programs are kept short enough so that no interrupts are lost.

The interface program consists of the various interrupt routines which communicate with the hardware and several subroutines which can be called by the main program to communicate with these interrupt programs. In our description we will refer to the schematic diagrams of the interface hardware in Appendix B. The next section is a summary of the computer input/output commands, and the entire program is listed in Part IV.

Clock interrupt

The clock interrupt is of fundamental importance to all timing and motor-drive operations. The 9.6-kc crystal-controlled oscillator (4407-1M18) operates through a 5-bit binary scaler (4225-1L18) to turn on the clock flag (4214-1L19) which activates the interrupt line 300 times per second. This flag can be tested by the IOT command 6312 which operates through an AND gate (4113-1L16) to cause a skip if the clock flag is off. The clock flag is turned off by IOT command 6311.

When this interrupt occurs the program INT saves the AC and link, tests the clock flag, and causes a jump to CLCK. The various functions of this program will be mentioned briefly here and described in detail in the pertinent sections below.

CLCK first processes the accumulated data count. Then if the overall motor indicator MI is set, it enters the motor-drive routines. Next it issues an IOT command to produce one pulse of the 300-cps audio tone if AUDIO has been set. The tenth-second counter TNTK is then advanced and tested. This test initiates further clock routines once for every thirty clock interrupts, that is ten times per second.

The first section of this tenth-second routine times the counting of data. Next a timer associated with the keyboard signal routine is entered, and finally another timer provides a delay for the chart recorder. For the data-collection program the routine SWAIT then provides a half-second delay while the shutter opens, and routine AUD controls the coded audio output.

The clock-interrupt program terminates at TSIN which restores the AC and link, returns control to the main program, and enables interrupts.

Status register

The status register is a multiple-input circuit connected to the four one-degree-marker generators and to the several limit switches. An interrupt occurs if any one of its twelve flip-flops is set. The IOT command 6302 causes a program skip if no status bit is on. The entire register is transferred to the AC (a logical-OR operation) by IOT command 6301, and 6304 clears any bits for which the corresponding AC bit is one.

When a status interrupt occurs the program INT saves the AC and link and causes a jump to STAT. STAT reads the status register and tests each bit in sequence. Table STAB is used to select a jump address corresponding to the first one-bit found. This one status flip-flop is cleared before the jump to the selected program is executed. The operation of these interrupt programs will be described below.

Control register

The control register or status-out register is a set of eight flip-flops (4220-1L17) which permit the program to operate external equipment. Six of them are used to control the solenoid drivers (4681-1L24 and 1L25) which operate the shutter, filters, and attenuators, and another activates the data-count gate (6106-1L22). One flip-flop of this register is not used.

The IOT command 6352 clears all bits of the control register, and IOT 6354 turns on those bits for which the corresponding AC bits 4-11 are ones. The combined IOT 6356 is in effect a command to copy AC bits 4-11 to this register. The one-microsecond delay between the clearing and setting IOT's is negligible compared to the response time of the external equipment.

It is often necessary to modify one or more of these flip-flops without changing the others. The current state of the control register is therefore kept in memory location STOUT so that the entire word can be copied to the register after the desired bits have been altered. Both the main and interrupt programs need to have control over this register, and settings made by the main program are always performed by means of subroutine DCR which avoids interference by inhibiting interrupts during the time when STOUT is being modified.

Motor-drive system

A major part of the interface system is concerned with driving the four circles to accurately known angular positions. Each shaft is operated by a Slo-Syn stepping motor which requires 200 pulses to turn it one revolution. Each motor revolution results in a one-degree motion of a circle which can thus be set to the nearest 0.005 degrees.

The chi and phi motors are types SS-50-1036 manufactured by Superior Electric Company, and these are driven by ST-250 translators. The two-theta and omega shafts are equipped with

the larger SS-250-1052 which are driven by ST-1800 translators. All these motors are double-ended to accommodate the one-degree marker devices which will be described below.

The two IOT commands which control each motor are listed in the next section. Each of these operates through a pulse amplifier (1691-1N6 or 1691-1N7) to cause a translator to move the corresponding motor one step forward to backward. The best motor performance seems to occur at a pulse rate of 300 per second, i.e., 1.5 motor revolutions per second, or 90 degrees per minute for the final circle. The execution of the pulsing commands is controlled by the clock interrupt, and the 300-cycle-per-second clock frequency was established to give this optimum pulse rate.

The 300-cps clock interrupt program first examines the overall motor indicator MI. If this is zero then all motors are off and the motor routines are bypassed. If MI is non-zero then the individual motor programs are entered in sequence. We will describe only the two-theta motor drive routine TMDR since the other three, OMDR, CMDR, and PMDR, are identical. If the two-theta motor indicator MIT is zero indicating that this motor is off then the remainder of TMDR is bypassed. If all four individual motor indicators are off then the overall indicator MI is turned off.

If MIT is non-zero the program tests some slow-start counters which will be described later. It then proceeds to compare the current shaft position with that desired. The current two-theta shaft position is stored as two integers in memory locations DT and HT so that the angle in degrees is DT + HT/200 where $0 \leqslant HT \leqslant 199$. In DST and HST are stored the negatives of the integers which describe the desired setting. If the desired position has not been reached then a motor command is issued to step the shaft either forward or backward, and DT and HT are modified correspondingly. The program then proceeds to service the next motor.

If the current and desired positions agree then no motor-pulse command is issued. The program checks the overshoot indicator as described below, and if the current setting is the final one, the two-theta motor indicator MIT is turned off.

A motor is started by the main-program subroutine MOTOR which takes the desired angle expressed in floating point and stores the integers DST and HST (or their equivalents for the other motors). If necessary, 360 is added to or subtracted from the current position DT in order to reach the setting by the shortest path.

MOTOR also sets two slow-start counters, KT1 and KT2, so that when MIT is turned on the clock-interrupt program TMDR must be entered 20 times before the first motor-pulse command is executed. Subsequent commands are issued on the next fourth, third, and second clock interrupts and then on every one thereafter. The initial delay permits the motor to come to a full stop if it had already been running, and the remaining delays permit it to overcome inertia gradually.

The program has been arranged so that a final setting is always made in the forward direction to minimize the effects of any backlash in the gear trains. Subroutine MOTOR tests the direction of travel and for settings in the reverse direction it subtracts one degree from the desired setting and sets an overshoot indicator OVRT at -1. Otherwise OVRT is set to zero. When the clock routine TMDR finds that a desired setting has been reached it tests OVRT. If OVRT is -1 the routine sets it to zero, adds back the one-degree increment to the desired position, and resets the slow-start counters thus causing the motor to drive forward to its final position.

Care is taken to operate the motor indicators in a way that is logically sound. Subroutine MOTOR first turns off the individual motor indicator MIT to insure that the interrupt program TMDR will not be executed until its temporaries

have all been set. After setting them, subroutine MOTOR turns on first MIT and then MI (which may already be on if another motor is running). These indicators will be turned off by the interrupt programs as the motors reach their destinations. A subroutine WMOT can be used to delay the main program until MI becomes zero indicating that all motors have stopped.

Keyboard signals /IT, etc., are used initially to set the current shaft positions, DT and HT, etc., to agree with the dial readings. The main program /PA can be used to print the current angle positions even when the motors are running.

One-degree marker system

The motor-drive system as described so far would accumulate errors if for any reason a motor failed to respond to a pulse command. To prevent this from happening each motor has been equipped with the photoelectric marker device similar to that illustrated in Appendix C. A wheel with a single narrow slit is mounted on the shaft of each Slo-Syn motor. Once during each motor revolution this slit permits light to reach the IN2175 photodiode generating a pulse which is amplified by a circuit shown in Appendix C. The resulting signal is sent to one of the Schmitt triggers (4410-1N12 to 1N15) which turns on the corresponding status flip-flop (4218-1M10). Even though the motor may be moving in an oscillatory way, these circuits permit the status register to be set only once during each pass through the reference position.

The setting of the status register causes an interrupt which is processed as described above to initiate one of the four interrupt routines MRKT, MRKO, MRKC, or MRKP. Each of these calls the general routine MARK, and we will describe its action in terms of the variables for the two-theta drive.

The marker device is adjusted mechanically so that the light signal is generated approximately halfway between the adjacent stable positions at n + 0.995 degrees and n + 1.000

degrees (HT = 199 and 0, respectively). The marker interrupt should therefore be received shortly after the execution of the motor command which causes a step from one of these positions to the other. When the clock-interrupt program TMDR issues this command, it also modifies the record of the position so that when the marker occurs, HT is expected to be 0 if the motor is driving forward or 199 if it is driving backward.

Experimentally we have found that although this is true when the slow start is in operation, it usually does not hold when a motor is running at full speed. In this case the mechanical lag of the motor often delays the marker interrupt until after the next clock interrupt has occurred, causing HT to be 1 if the motor is driving forward or 198 if it is driving backward.

As a simple solution to this problem we have arranged that subroutine MARK will accept the current position as correct if HT is either 0 or 1 for forward motion or either 199 or 198 for backward travel. If one of these conditions does not hold then MARK corrects the position record to the acceptable value nearest to the incorrect one. In this way one pass through the reference position always leaves the current position, represented by DT and HT, within one step of its correct value. Furthermore, two passes through the reference position, one forward and one in reverse, with both at high speed or both at starting speed, should correct the record of the current position exactly.

Two error counters are associated with each drive. The interrupt program MARK adds one to ERT each time the record of two-theta position is corrected. In addition the two-theta serious-error indicator TISE is incremented by one if the magnitude of the correction is more than ten motor steps.

The system as described so far would check a current position only when a marker interrupt occurred, and a circle which is left at one setting for a prolonged period would not

be tested. Furthermore, mechanical or electrical failure of the motor drive or the photoelectric marker would not be detected because no marker interrupt would be generated. For this reason a main-program subroutine CHECK has been provided to test all drives and to ascertain that all marker interrupts are being received. Subroutine CHECK first sets non-zero the marker indicators CKT, etc., associated with each shaft. It then drives the four circles backward two degrees and forward two degrees so that all reference points will be passed at full speed in both directions. Interrupt program MARK clears the appropriate marker indicator to zero each time it is entered so that a non-zero indicator at the end of CHECK shows failure of the corresponding drive or marker generator. Subroutine CHECK prints the marker indicator and error counters for each drive and then clears the counters to zero. The printed error counts thus represent the number of errors corrected since CHECK was last executed.

Our experience in routine operation is that trivial errors may be detected and corrected several times per hour. Serious errors (i.e., errors greater than 0.05 degrees) have not occurred except on the few occasions that severe mechanical problems were developing.

Data-counting system

Pulses from the scintillation counter and preamplifier are shaped and selected by a linear amplifier and used to trigger the data-break flip-flop (4214-1L19) through input circuitry to be described below. This causes the program to be suspended for a memory cycle while one is added to CNTR, a core memory location the address of which is fixed at 2600 by the wiring at connector J3. CNTR thus serves as a hardware counter and eliminates the need for reading an external scaler.

Because CNTR can accommodate only 4095 counts without overflowing, we use the clock-interrupt routine CLCK to add its contents to the double-precision count locations CTLO and

CTHI and to reset it to zero 300 times each second. Since each data break takes a minimum of six microseconds it is not possible for CNTR to overflow between clock interrupts.

Because the data break takes precedence over the program, it would be possible for an unusually high counting rate to saturate the computer, and programs which might remedy this situation would be unable to operate. For this reason we have made the incoming signals pass through one of the data-count gates (6106-1L22) which is enabled only when the clock flag is off. This has the effect of making the clock interrupt take precedence over the data count. The interrupt routine CLCK tests CNTR before processing it, and if it exceeds 200 (corresponding to more than 60,000 counts per second) the count is turned off by means of the data-count flip-flop which also controls the data-count gate. In this case the indicator CTERR is set to warn the main program to take appropriate action. Ordinarily the program turns off the clock flag as soon as CNTR has been processed so that data counting can continue during the remainder of the clock-interrupt routine.

Because the X-ray counting rates may sometimes be higher than these limits, a binary scaler (4225-1L21) is provided to transmit only a fraction of the counts via the data break. Its scale is set by a manual switch, and we routinely use a factor of four to insure that the four-microsecond dead time of the amplifier will always be limiting. The binary scaler is never cleared and never read since the errors which it introduces will usually be small compared to counting statistics. The data-count gate is inserted before this binary scaler rather than after it so that these errors will not be accumulated during a step scan to obtain an integrated count.

The main-program subroutine STCT initiates counting for a specified period of time, but the actual starting and stopping of the count is controlled by the 10-cps clock-interrupt

program TENTH so that the counting time will be defined as precisely as possible.

The timing counter CNTK is normally zero, and as long as this is so TENTH leaves the data-count flip-flop off. To initiate counting STCT first clears CNTK to prevent any possible interference by the interrupt program, and then enters DCR to turn off the data count. These are precautionary measures because the count would ordinarily be off when STCT is entered. It next clears CNTR, CTLO, CTHI and CTERR and finally sets CNTK to -(N + 1) where N is the desired counting time in tenths of seconds.

On the next 10-cps clock interrupt TENTH finds CNTK non-zero, turns on the data count, and increments CNTK. These operations are repeated on each subsequent entry to TENTH even though the data count is already on. When CNTK had advanced to zero, TENTH turns off the data count. After this time the double-precision counters, CTLO and CTHI, contain the measured count.

Upon return from STCT the main program can proceed with any desired operations since the counting is controlled by the interrupt program. Evenually the program should enter subroutine WTCT, which examines CNTK and waits in a loop until it finds CNTK to be zero. WTCT then converts the double-precision count to floating point and stores it in a specified address. If CTERR is non-zero, indicating that the count rate exceeded the limit, then WTCT executes an error return.

Chart recorder

The chart recorder is controlled by three IOT pulses which can be executed as the combined command 6377. IOT 6371 clears a digital-to-analog converter (DAC), and IOT 6372 transfers to it the contents of the AC (a logical-OR operation). The pen-servo system of the chart recorder operates continuously to record the voltage output of this circuit. IOT 6374 triggers a 0.4 second one-shot (4301-1N2) which operates the chart motor by means of a Triac driver circuit.

The combined IOT command thus causes a single histogram step to be plotted.

The electrical zero of the recorder is 0.95 inches below the chart zero, and the DAC is adjusted so that a setting of 1023 gives a full-scale reading (10.00 inches). The pen can thus be positioned to within about 0.01 inches of any desired point between these limits by setting the DAC with an integer between 0 and 1023. Zero on the chart corresponds to a setting of 89.

Subroutine CREC of the interface package is available for plotting each step of a histogram. Given the argument N where $-89 \leqslant N \leqslant 934$, CREC sets up the integer N + 89 in the AC and then executes 6377 to initiate the recording. The one-shot takes 0.4 seconds to complete its cycle, and it is important that no attempt be made to trigger it again until it is finished. For this reason subroutine CREC sets a half-second timer, CRT, before returning to the main program. This timer is advanced by the tenth-second interrupt routine, CRD, so that it becomes zero after 0.5 seconds. If subroutine CREC is re-entered within half a second the program is delayed until CRT has become zero.

The effective scale of a chart reading is controlled entirely by the program which generates the argument N for subroutine CREC. For example, subroutine REC multiplies a floating-point COUNT by a FACTOR which has been set at 934/SCALE. The product is then converted to the integer N.

The facility for recording below zero on the chart was provided so that the data-collection subroutine, DATA, can mark the point between two scans with a negative step.

Limit switches

Limit switches are provided to prevent collision between the various parts of the diffractometer. Each possible contact is protected by a pair of switches which are adjusted to operate at settings which differ by a fraction of a degree. The switch which closes first signals the computer program,

which should stop the motors. If for some reason the motors were to fail to stop, the second switch would cause all motor power to be shut off.

Five separate switch circuits are provided and these operate through Schmitt triggers (4410 - 1M19 to 1M25) to activate the status register. The next section lists the status bits which are set by various types of contacts. The information as to which contact occurred is thus available to the program, and in principle it should simplify the problem of recovering automatically from the error. In practice, however, we have found it easier to avoid collisions by making appropriate tests on the calculated angles before attempting to set them. The program therefore assumes that if a limit switch is hit there is something seriously wrong; it terminates current operation, stops the motors, and goes to the initial loop to await further instructions. This procedure has been programmed by setting the appropriate addresses in the status-register jump table, STAB, (described above) to INWT.

Shutter, filters, and attenuators

The control register described above activates solenoids which operate the X-ray shutter, two filters, and three attenuators, all in the primary beam. Each of these six devices may be inserted independently. The function of each control-register bit is given in the next section.

Three subroutines, SHUTR, FLTR, and ATTEN, which facilitate the operation of these devices are described in a later section. The data-collection programs make use of the shutter, but no major programs have yet been prepared which use the filters or attenuators.

Audio output

A self-answering telephone has been installed at the diffractometer so that the progress of data collection can be determined by calling the appropriate number. The information transmitted includes the sounds of the motors and

teleprinter and a 300-cycle audio Morse-code signal under program control. We will describe the hardware and software involved in generating this code signal.

A three-inch speaker is driven by a one-shot (4301-1M18) which is triggered by IOT 6314. The one-shot produces a pulse about 1/600th of a second in duration. The 300-cycle tone can be produced by the clock-interrupt program by executing IOT 6314 once on each interrupt, that is 300 times per second. Location AUDIO in this routine is set to 6314 to turn on the tone or to a NOP command, 7000, to turn it off.

Morse-code signals are generated by the tenth-second interrupt routine, AUD. On each third entry, i.e., each 0.3 seconds, this program examines successive bits of code words CODEA and CODEB and sets AUDIO for tone on or off depending on whether the bit is one or zero. A main-program subroutine CODE is provided to set up these code words.

Modification of reader circuitry

In order to use the paper-tape reader while making use of the interrupt feature it is necessary to modify the reader circuitry. The PDP-5 as delivered (and also the PDP-8) uses IOT 6032 to turn off the reader flag and also to start the reading of the next character. In general the main program may not be ready for another character immediately, and a program which does not use the interrupt can ignore the reader flag when it comes on and leave it set thus stopping the reader until it has used the character. A program which uses the interrupt cannot do this, however, because the reader flag, which causes an interrupt, must be turned off to prevent repeated interruption. Turning off the flag, however, would cause the paper tape to be read continuously, and characters for which the program is not ready would be lost.

To keep this from happening we have provided a manual switch which prevents IOT 6032 from starting the reader. An additional IOT, 6004, has been provided to start the reader. The keyboard/reader interrupt routine, KEYB, executes a KRB

command which includes the 6032 IOT, but the reader is not started again until the main program enters subroutine IPCH to read another character. IPCH executes 6004 and waits in a loop until the interrupt occurs.

This modification is relevant only when paper-tape input is used, for example, for the program /IR. With or without the modification, data can always be typed on the keyboard. If a character is typed for which the program is not ready it will be ignored and should be typed again at the appropriate time.

In future versions of the instrument the manual switch will be eliminated and IOT 6004 will be made to turn off the reader flag without starting the reader. IOT 6032 will be unchanged so that it will turn off the flag (if it is on) and start the reader. The roles of 6004 and 6032 will thus be reversed and routines KEYB and IPCH will be modified accordingly.

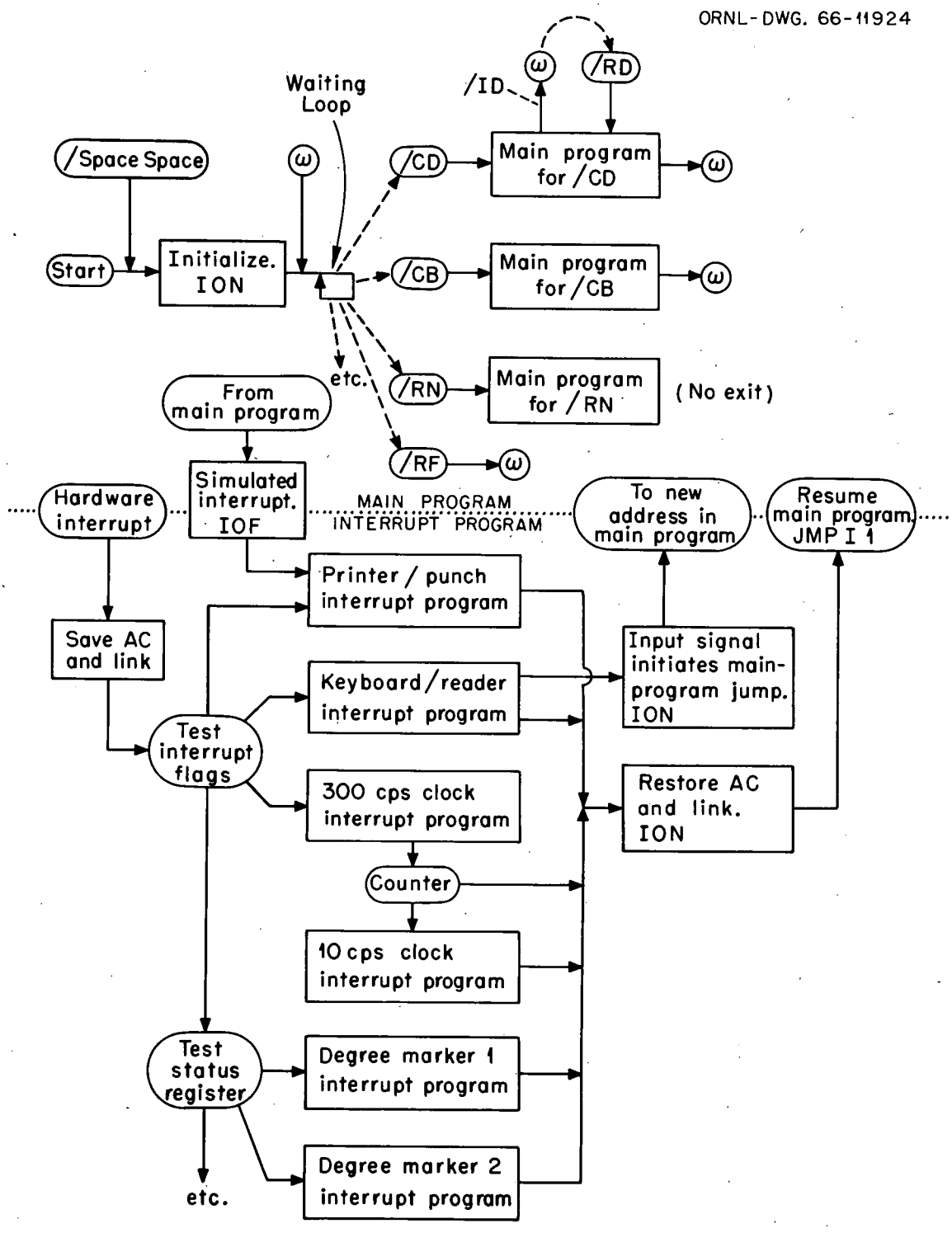

Figure 2. Overall schematic flow chart showing the relationship between the main programs (top) and the interrupt programs (bottom).

SUMMARY OF INPUT/OUTPUT COMMANDS

Clock interrupt

6312 Skip if clock flag is off.

6311 Turn off clock flag.

Status register

6302 Skip if no status flag is on.

6301 OR the status register to the AC.

6304 Clear status flags for which the corresponding AC bits are ones.

Status bit	Source of external signal
0	Two-theta degree marker
1	Omega degree marker
2	Chi degree marker
3	Phi degree marker
4	Limit switch, counter arm vs. base
5	Limit switch, counter arm vs. goniostat
6	Limit switch, goniostat vs. base
7	Spare
8	Spare
9	Limit switch, beam collimator
10	Limit switch, counter
11	Spare

Stepping motors

6322 Step two-theta forward.

6321 Step two-theta backward.

6324 Step omega forward.

6331 Step omega backward.

6334 Step chi forward.

6332 Step chi backward.

6341 Step phi forward.

6342 Step phi backward.

Audio output

6314 Pulse audio output once.

Chart recorder

6371 Clear digital-to-analog converter.

6372 OR the AC to digital-to-analog converter.

6374 Drive chart motor for 0.4 sec.

Control register

6352 Clear the control register.

6354 OR AC bits 4—11 to the control register.

6356 Copy AC bits 4—11 to the control register.

Control register bit	External device	0	1
4	Spare		
5	Data count	Off	On
6	Shutter	Closed	Open
7	Filter 1	Out	In
8	Filter 2	Out	In
9	Attenuator 1	Out	In
10	Attenuator 2	Out	In
11	Attenuator 3	Out	In

Teletype keyboard/reader

KSF 6031 Skip if keyboard/reader flag is on.

KCC 6032 Clear AC and turn off keyboard/reader flag. If the manual switch is in the "6032" position, this command enables the paper-tape reader to read the next character. If it is in the "6004" position the reader remains disabled.

KRS 6034 OR the keyboard/reader buffer to AC bits 4—11.

KRB 6036 Clear the AC and copy the keyboard/reader buffer to AC bits 4—11. If the manual switch is in the "6032" position, this command enables the paper-tape reader to read the next character. If it is in the "6004" position the reader remains disabled.

6004 If the manual switch is in the "6004" position, this command enables the paper-tape reader to read the next character. If it is in the "6032" position, then this command has no effect.

Teletype printer/punch

TSF 6041 Skip if printer/punch flag is on.

TCF 6042 Turn off printer/punch flag.

TPC 6044 Copy AC bits 4—11 to printer/punch buffer and initiate printing. The AC is not cleared.

TLS	6046	Copy AC bits 4—11 to printer/punch buffer, turn off printer/punch flag, and initiate printing. The AC is not cleared.

IV. PROGRAMMING INFORMATION

This section contains information on the details of the computer programs which should be useful to a person involved in modifying them. The preparation of new main programs for an operating instrument is relatively simple and can probably be done without changing the existing interface and arithmetic routines. General programming rules are given below followed by instructions for setting up new keyboard signals. Detailed descriptions of the available arithmetic and interface subroutines are provided, and the list of Available Memory Locations should be of help in choosing a location for the new program.

If it becomes necessary to revise the interface routines, for use with different hardware configurations, for example, the programmer should be especially careful to follow the rules for interrupt programs.

GENERAL PROGRAMMING RULES

State of the accumulator

1) The accumulator (AC) is always left clear except when it is being used.
2) The AC must always be clear when a subroutine is entered unless it contains an argument expected by the subroutine.
3) A subroutine must always clear the AC before returning unless it contains an argument expected by the calling program.

State of the link

1) The state of the link is not assumed to be known except when it is being used.
2) A subroutine cannot assume the state of the link to be known unless it is used to transmit an argument to the subroutine.

3) Upon return from a subroutine the link will have an arbitrary value unless it is used to transfer an argument to the calling program.

RULES FOR INTERRUPT PROGRAMS

Responsibilities of the interrupt program

1) When an interrupt occurs the return address is saved at location 1 and interrupts are inhibited by hardware. The contents of the AC and link must be saved by the interrupt program.

2) The interrupt program must turn off the flag corresponding to the interrupt which has been processed.

3) On terminating, the interrupt program must restore the AC and link. ION must be executed immediately before jumping to the saved main-program location.

4) If the interrupt program is to cause the main program to jump, then the AC must be cleared to zero unless it is used to transmit an argument to the main program. The link need not be reset, but ION must be executed immediately before jumping to the new main-program location.

Isolation of main and interrupt programs

Except under the conditions stated in the next section the following rules must be followed:

1) The main program and the interrupt program must be entirely separate from each other.

2) Temporary locations used by the main program must not be used by the interrupt program and vice versa.

3) Subroutines used by the main program must not be used by the interrupt program and vice versa.

4) With a few exceptions, external equipment is referred to only by the interrupt program. If the main program communicates with external equipment this is always done by subroutines which conform to the rules of the next section.

Communication between main and interrupt programs

1) Either program may examine indicators set by the other if it does not change them.

2) The interrupt program can cause main-program jumps as described above.

3) The interrupt program can communicate with the main program by setting indicators or variables to be used by the latter. As many locations as necessary may be set.

4) The main program may communicate with the interrupt program by setting indicators or variables to be used by the latter, but it must always be recognized that an interrupt may occur between the setting of the first and last variable. Two ways are available for preventing such an interruption from causing errors:

   a) The main program executes IOF, sets all the variables, and then executes ION. Clearly the time that interrupts are inhibited should be kept to a minimum.

   b) Some indicator which permits the interrupt program to interrogate the variables in question is turned off by the main program and then turned on again after they are set.

5) It is possible for the main program to initiate an interrupt program by simulating an interrupt, i.e., by executing IOF, storing a return address in location 1, and jumping into the interrupt program. The AC and link must, of course, be properly set on return from such a simulated interrupt.

6) In routine programming it is best to make all such communications by means of well-checked-out subroutines available for the purpose.

Starting the program

1) The program must always be started by means of a section which initializes the interrupt program, executes ION, and then proceeds with the main program.

2) Our convention is that the main program starts with a waiting loop. Signals manually executed on the keyboard then cause the interrupt program to initiate a jump to the desired section of the main program.

SYSTEM OF KEYBOARD SIGNALS

Starting the program at INWT (location 200) initializes it and leaves it in a waiting loop with 7070 displayed in the AC. The user initiates a program by typing a keyboard signal consisting of a slash (/) followed by two characters. A signal table contains the packed trimmed ASCII code for each valid signal together with the starting address of the corresponding program. Typing a valid keyboard signal causes a jump to this program.

In order to make the system relatively user-proof, binary tapes should be prepared so that whenever a new program is loaded in place of a previous one, the signal for the old program is also deleted from the signal table. Signals which are not found in the table are ignored.

Most of the programs initiated in this way are main programs and starting them terminates any other main program which may have been in progress. It is also possible, however, to initiate very short interrupt programs which merely set indicators for the main program and do not otherwise disturb its operation. Valid keyboard signals for main programs are mirrored on the teleprinter/punch, but those for interrupt programs are not.

Specifications of keyboard signal table

1) The signal table starts at SGLTAB (location 2143) and consists of two words for each entry. The first word is the packed trimmed ASCII code for the two-character signal. The second word is the starting address of the corresponding program.
2) NLIST (location 2116) contains the negative of the total number of entries in the signal table. The maximum number of entries permitted depends only on the space available for the signal table.
3) Entries corresponding to interrupt programs must always be grouped at the beginning of the signal table. NINT (location 2115) contains the negative of the number of entries corresponding to interrupt programs.
4) The entry for an interrupt program can be deleted from the table by setting its address to TSIN.
5) The entry for a main program can be deleted by setting the packed trimmed word to 0000. Although this corresponds to the signal /@@, even this unlikely signal will be ignored if an unused entry, 0000 TSIN, appears in the interrupt section of the table.

Adding new main programs

1) Add the desired keyboard signal to the table following the above specifications.
2) Delete the signals of any programs which are written over or otherwise rendered inoperative.

3) The termination of the new program (if any) should be a jump to OMGA.

Adding new interrupt programs

1) Add the desired keyboard signal to the table following the above specifications.
2) Observe strictly the section on Rules for Interrupt Programs.
3) Terminate the program with a jump to TSIN.

COMMON STORAGE

COMN, locations 0100 to 0137 on page zero, is designated as common storage for use by main programs. Subroutines GET and PUT described below are provided to facilitate transfer of blocks of information to and from COMN. The only other subroutine in the arithmetic and interface packages which uses COMN is PERP.

ROUTINES AVAILABLE IN ARITHMETIC AND INTERFACE PACKAGES

*Routines marked with an asterisk will probably not be used by the programmer unless extensive modifications are being made.

Arithmetic package	Name	Address	Page-zero pointer	Page reference
Input routines	INTIN	7000	73	61
	FLINTP	7400	5	61
	FINP	4600	26	62
	*DECONV	7007		62
Output routines	IOUT	7466	64	62
	DPIOUT	7505		63
	VFOUT	7200		63
	FOUT	7460	6	64
	FOPT	4617	27	64
	*DPOP	7262		64
	*STSG	7164		65
	TY1	7527		65
	TY2	7544		65
	CRLF	6766	165	66

Arithmetic package	Name	Address	Page-zero pointer	Page reference
Arithmetic	FPNT	5600	7	66
	NEG	5303	20	67
	ABS	5572	21	68
	SQRT	6656		68
	FLT	5354	71	68
	FIX	5550	34	69
Trigonometry	SINE	5200		69
	COS	5310		69
	ARTN	5400	22	69
Matrix and vector operations	MM	5146	33	70
	MV	5114	25	70
	VV	5045	72	70
	TRAN	5000	32	71
	UNIT	4636	30	71
	PERP	4702	31	71
Utility routines	COPY	4761	24	71
	GET	4526	75	72
	PUT	4553	76	72
	ADR	4501	23	73
Interface package				
Basic system	*INWT	200		74
	OMGA	210	66	74
	*TSIN	2373	65	74
	*INIC	2677		74
Keyboard/reader	IPCH	2121	67	74
	*INIK	2130		75
Teleprinter/punch	OPCH	1260	70	75
	*INIP	1307		75
Counting routines	STCT	2703		76
	WTCT	2721		76
Motor routines	WHERE	2475	145	76
	*SETUP	335	62	76
	MOTOR	400	162	77
	MOTST	517		77
	MOTSET	531		78
	WMOT	553	167	78
	*INIM	540		78
	CHECK	1025		78
	*DRVCK	1115		79
Chart recorder	REC	2400		79
	CREC	1146		79

Interface package	Name	Address	Page-zero pointer	Page reference
External devices	DCR	1363		80
	FLTR	2436		80
	SHUTR	2446		80
	ATTEN	2456		80
Audio output	CODE	3132	161	81

DESCRIPTION OF SUBROUTINES

Unless otherwise specified, all subroutines assume the AC to be clear on entry and leave it clear on exit.

Input routines

INTIN, Single-Precision Integer Input

Purpose: To read and convert a single-precision signed integer. All characters are ignored until the first minus sign or digit has been typed. After this the number is terminated by any non-digit. A decimal point always causes the number to be terminated. A rub-out typed before terminating the number causes the entire number to be started over. All characters typed are mirrored on the printer, and mirroring of a carriage return is always followed by a line feed.

Calling sequence: JMS INTIN

(Return with AC = x, the integer read)

Limitations: Normally $-2048 \leqslant x \leqslant 2047$. Otherwise x is taken as the low order 12 bits of the signed double-precision integer read.

FLINTP, Floating-Point Input Conversion

Purpose: To read and convert a floating-point number. All characters are ignored until the first minus sign, digit, or decimal point has been typed. After this the number is terminated by any non-digit. A rub-out typed before terminating the number causes the entire number to be started over. All characters typed are mirrored on the printer, and mirroring of a carriage return is always followed by a line feed.

Calling sequence: JMS FLINTP

(Return. Floating-point number is in floating AC)

Limitations: Let x be the integer representing the significant digits typed (i.e., ignoring the decimal point). Then if $|x| \geqslant 5,242,880$ the final digits will be ignored. Thus attempting to input 5242885 yields 524288. Attempting to input 53.0123456 yields 53.0123000.

FINP, Floating Input

Purpose: To input a specified number of floating-point numbers, storing them in successive locations.

Calling sequence: JMS FINP

-N

(Address for storing first number)

(Return)

where N is the octal number of floating-point numbers to be read.

*DECONV, Basic Double-Precision Integer Input

Purpose: To read and convert a double-precision integer. All characters are ignored until the first minus sign, digit, or decimal point has been typed. After this the number is terminated by any non-digit. A rub-out typed before terminating the number causes the entire number to be started over. All characters typed are mirrored on the printer, and mirroring of a carriage return is always followed by a line feed.

This subroutine is used by FLINTP and INTIN.

Calling sequence: JMS DECONV

(Return. Positive integer is in HI, LO. SIGN $\neq$ 0 if minus has been read. CHAR is last character read. DNUMBR is number of digits read.)

Auxiliary entry: Subroutine FLINTP re-enters DECONV with JMP DECON after finding that DECONV was terminated by a decimal point.

Limitations: Let x be the number input. Then if $|x| \geqslant 5,242,880$ the final digits will be ignored. Thus attempting to input 5242880 yields 524288.

Output routines

IOUT, Fixed-Point Signed Integer Output

Purpose: To convert and put out a single-precision signed integer x where $-2048 \leqslant x \leqslant 2047$. The output will

consist of five characters including the sign which is a space or a minus. Leading zeros are suppressed except for x = 0 in which case a single digit zero is put out.

Calling sequence: TAD number to be put out

JMS IOUT

(Return with AC = 0)

DPIOUT, Fixed-Point Signed Double-Precision Integer Output

Purpose: To convert and put out a double-precision signed integer x where $-8.388,608 \leqslant x \leqslant 8,388,607$. The output consists of one space or minus sign followed by the digits. All leading zeros are omitted entirely except for x = 0 in which case a single digit zero follows the sign (which is a space).

Calling sequence: JMS DPIOUT

Location of high order part

(Return)

VFOUT, Variable-Format Floating-Point Output

Purpose: To output a floating-point number in a fixed-point format with an optional number of decimal places.

Calling sequence: (Number to be put out is in floating accumulator)

JMS VFOUT

A

B

(Return. Contents of floating AC have been lost.)

Specification of format:

B is the number of digits following the decimal point. $0 \leqslant B \leqslant 7$.

A is the number of digits (or spaces representing leading zeros) preceding the decimal point. $0 \leqslant A + B \leqslant 8$.

The sign character always precedes the first non-zero digit. If B = 0 then no decimal point is printed. Thus the normal number of characters put out is A + B + 2 if $B \neq 0$ or A + 1 if B = 0.

If the number to be put out is too large to occupy the A + B positions reserved for it then the subroutine effectively increases A to accommodate the number. Thus by setting A at a small value it is possible to suppress leading spaces and reduce the amount of output.

Limitations: If x is the number to be put out, then $|x| < 8,388,608 \times 10^{-B}$, otherwise the output will consist of a single asterisk (*) as an error indicator.

Caution: VFOUT uses subroutine ALIGN in a way that assumes that memory locations 0001 and 0002 are not both zero.

FOUT, Floating-Point Output

Purpose: To output a floating-point number in a fixed-point format with 3 decimal places.

Calling sequence: (Number to be put out is in floating accumulator)

JMS FOUT

(Return. Contents of the floating AC have been lost.)

Limitations: If x is the number to be put out, then $|x| < 8388.608$, otherwise the output will consist of a single asterisk (*) as an error indicator.

Note: See caution under VFOUT.

FOPT, Floating Output

Purpose: To output a specified number of floating point numbers from successive storage locations using the standard format of FOUT (3 decimal places).

Calling sequence: JMS FOPT

-N

(Address of first number to be put out)

(Return)

where N is the octal number of floating-point numbers to be printed out.

Note: See caution under VFOUT

*DPOP, Basic Double-Precision Output

Purpose: To output a positive double-precision integer with leading zeros suppressed, with a sign preceding the first non-zero digit, and with a decimal point inserted at a specified position. This routine is used by VFOUT, DPIOUT, and IOUT.

Usage: 1) Store positive double-precision integer in HI and LO.

2) Store the ASCII representation of the desired sign character in SIGN. This can be done by subroutine STSG.

3) Calling sequence:

JMS DPOP

A } See VFOUT for definitions of A and B.
B

(Return)

*STSG, Set Sign for Output

Purpose: To set location SIGN to the ASCII character for a space or a minus sign depending on the sign of the AC.

Calling sequence: TAD 12-bit number to be tested

JMS STST

(Return with AC = 0)

TY1, Type One Alphanumeric Character

Purpose: To put out via the teleprinter/punch one character defined by the six bits of ASCII trimmed code in AC bits 6-11. The AC bits 0-5 are ignored.

Calling sequence: (Trimmed code in AC bits 6-11)

JMS TY1

(Return with AC = 0)

Limitations: Trimmed codes exist only for characters with ASCII representations such that $240 \leqslant \text{ASCII} \leqslant 337$. Thus carriage return, line feed, rub out, etc., cannot be put out via TY1. Such characters may be put out using OPCH.

TY2, Type Two Alphanumeric Characters

Purpose: To put out via the teleprinter/punch two characters which have been defined by one 12-bit word of trimmed ASCII code.

Calling sequence: (Packed word in AC)

JMS TY2

(Return with AC = 0)

Limitations: Trimmed codes exist only for characters with ASCII representations such that $240 \leqslant \text{ASCII} \leqslant 337$. Thus carriage return, line feed, rub out, etc., cannot be put out via TY2.

CRLF, Output Carriage-Return, Line Feed

Purpose: To put out on the teleprinter/punch the characters carriage return and line feed.

Calling sequence: JMS CRLF
(Return)

Arithmetic

FPNT, Extended Interpretive Floating-Point Arithmetic

Purpose: To facilitate the programming of floating-point arithmetic operations. A more detailed description is given elsewhere.

Calling sequence: JMS I LFPT
(Instructions)
.
.
FEXT
(Return)

Instructions available:

FADD	Address
FSUB	Address
FMPY	Address
FDIV	Address
FGET	Address
FPUT	Address
FNOR	
FSQR	
FSQT	
FSIN	
FCOS	
FATN	(Special. See ARTN)
FNEG	
FABS	
FEXT	

Floating-point numbers:

The machine representation of a floating-point number occupies three consecutive 12-bit words. The address of the number is taken as the address of the first of these words. Memory locations 44, 45, and 46 on page zero are

defined as the floating-point accumulator which is involved in all floating-point operations.

The first 12-bit word is interpreted as a two's-complement integer Y so that $-2047 \leqslant Y \leqslant 2047$. The second and third words are interpreted as a double-precision two's-complement fraction with the binary point between the two most significant bits. Then the value of the number is $X*2^Y$. All operations using FPNT produce results which are normalized; that is $1/2 \leqslant |X| < 1$ except for the number zero for which $X = Y = 0$.

Usually floating-point arithmetic or input/output operations involving numbers which can be expressed exactly (i.e., integers or integral multiples of a power of two) will produce results which are exactly correct.

Examples:

Decimal	Machine representation		
0	0000	0000	0000
1	0001	2000	0000
-1	0001	6000	0000
0.75	0000	3000	0000
-0.75	0000	5000	0000
0.125	7776	2000	0000
-0.125	7776	6000	0000
$1 - 2^{-23}$	0000	3777	7777
$-1 + 2^{-23}$	0000	4000	0001

NEG, Negate a Floating-Point Number

Purpose: To change the sign of the contents of the floating AC.

Calling sequence: JMS NEG
(Return)

or

(JMS FPNT)

FNEG

(FEXT)

ABS, Absolute Value of Floating-Point Number

Purpose: To take the absolute value of the contents of the floating-point accumulator, leaving the result in the floating-point accumulator.

Calling sequence: JMS ABS

(Return)

or

(JMS FPNT)

FABS

(FEXT)

SQRT, Floating-Point Square Root

Purpose: Take the square root of the absolute value of the number in the floating-point accumulator using Newton's method.

Calling sequence: JMS SQRT

(Return with result in floating-point accumulator)

or

(JMS FPNT)

FSQT

(FEXT)

FLT, Convert an Integer to a Floating-Point Number

Purpose: To convert the integer that is in the accumulator to a floating-point number in normalized form, leaving the result in the floating-point accumulator.

Calling sequence: (TAD N)

JMS FLT

(Return with AC = 0 and result in floating-point accumulator)

where N is the integer to be converted.

FIX, Convert a Floating-Point Number to an Integer

Purpose: To truncate the floating point number in the floating point accumulator to an integer that is left in the accumulator. Examples: Fixing 3.7 yields 3; fixing -3.7 yields -3.

Calling sequence: JMS FIX

(Return with result in AC. Contents of the floating AC have been lost.)

Limitations: The floating point number to be truncated must be within the range of fixed point integers, i.e., greater than or equal to -2047_{10} and less than or equal to $+2047_{10}$.

Trigonometry

SINE,COS, Floating-Point Sine and Cosine Routines

Purpose: To compute the sine or cosine of an angle given in degrees.

Calling sequence: (Argument in floating AC)

JMS SINE (or JMS COS)

(Return with result in floating AC)

or

(JMS FPNT)

FSIN (or FCOS)

(FEXT)

ARTN, Arctangent in Floating Point

Purpose: To compute x, the arctangent of A/B, in degrees, locating the result in the quadrant for which sin x and cos x have the signs of A and B, respectively, and $-180 < x \leqslant 180$.

Calling sequence: (Put B into location 5507. Put A into floating-point AC)

JMS ARTN

(Return with result in floating-point accumulator)

or

(JMS FPNT)

(Put B into location 5507. Put A into floating-point AC)

FATN

(FEXT)

(Return with result in floating-point accumulator.)

Matrix and vector operations

MM, Multiply Matrix Times Matrix

Purpose: To perform the multiplication $\underset{\sim}{C} = \underset{\sim}{AB}$ where A, B, and C are each 3 x 3 floating-point matrices stored by columns.

Calling sequence: JMS MM

A, address of first element of matrix A

B, address of first element of matrix B

C, address of first element of result.

(Return)

Limitations: The result C must not overlap A or B.

MV, Multiply Matrix Times Vector

Purpose: To perform the multiplication $\underset{\sim}{C} = \underset{\sim}{AB}$ where A is a 3 x 3 floating-point matrix stored by columns and B and C are each 1 x 3 floating-point vectors.

Calling sequence: JMS MV

A, address of first element of matrix

B, address of first element of vector

C, address of first element of result

(Return)

Limitations: The result C must not overlap A or B.

VV, Multiply Vector Times Vector

Purpose: To multiply two 1 x 3 vectors, each of which consists of three floating-point numbers stored in sequence.

Calling sequence: JMS VV

A, address of first element of vector A

B, address of first element of vector B

C, address for storage of result

(Return. The result is also left in the floating AC.)

Limitation: The result C must not overlap A or B.

TRAN, Transpose Matrix

Purpose: To transpose a 3 x 3 matrix of floating-point numbers.

Calling sequence: JMS TRAN

(Address of first element of matrix)

(Address for storing first element of transpose)

(Return)

Limitations: The resulting matrix may not be stored in the same place as the original matrix.

UNIT, Produce a Unit Vector

Purpose: To normalize a 3-dimensional vector to unity.

Calling sequence: JMS UNIT

(Address of vector to be normalized)

(Address for storing unit vector)

(Return)

Limitations: Result will be incorrect if original vector is the null vector.

PERP, Perpendicular Vector

Purpose: To obtain a unit vector perpendicular to two given vectors (i.e., parallel to $\underset{\sim}{V}_1 \times \underset{\sim}{V}_2$).

Calling sequence: JMS PERP

(Address of first component of $\underset{\sim}{V}_1$)

(Address of first component of $\underset{\sim}{V}_2$)

(Address for storing result)

(Return)

Limitations: If the two original vectors are colinear, i.e., if one is a multiple of the other, the result is a null vector. This routine uses COMN to COMN + 32(8).

Utility routines

COPY, Copy from One Part of Memory into Another

Purpose: To copy a sequence of N 12-bit words from one location to another.

Calling sequence: JMS COPY

-N

(Address of first word to be copied)

(Address into which first word is to be copied)

(Return)

GET and PUT, Move Block of Memory to Page Zero and Return It

Purpose: To simplify the process of moving blocks of temporaries or constants to page zero for easy access.

Rules for using GET and PUT:

1) Set up a block in "permanent" storage at location BLKN as follows:

```
BLKN, -N     Minus the number of words in block,
                        1 ≤ N ≤ 32₁₀
      Word 1
      Word 2
        .
        .
        .
        .
      Word N
```

2) To move this block to page zero:

```
JMS  I  LGET
BLKN
(Return)
```

After this operation the block will be found on page zero as follows:

```
 77/BLCK, contains BLKN
100/COMN, contains Word 1
                   Word 2
                     .
                     .
                     .
 77 + N/           Word N
```

3) To return this block to "permanent" storage:

```
JMS  I  LPUT
(Return.  BLCK contains zero.)
```

This routine finds BLKN at BLCK and -N at BLKN. If BLCK contains zero then no transfer occurs. BLCK contains zero on entry from the waiting loop.

4) Ordinarily the programmer need not execute PUT since GET automatically calls PUT. However, programs using GET must execute PUT before using COMN directly or entering a subroutine which uses COMN. At the end of the program PUT must be called if it is desired to retain the results in "permanent" block storage.

5) If a program never uses GET then it can use COMN. It should be noted, of course, that certain subroutines use COMN also.

Example of the use of GET and PUT:

```
Start main program
    .
    .
JMS  I  LGET        Gets BLKX
BLKX
    .
    .
JMS  I  LGET        Puts away BLKX and gets BLKY
BLKY
    .
    .
JMS  I  LPUT        Puts away BLKY
    .
JMS  SUB which uses COMN
    .
    .
JMS  I  LGET        Gets BLKY
BLKY
    .
    .
JMS  I  LPUT        Puts away BLKY (optional)
JMP  I  LOMGA       End of main program
```

<u>ADR, Set Arguments for a Subroutine</u>

Purpose: To store the arguments used in calling a subroutine in temporary locations within the subroutine. The location for return from the subroutine is also set.

Calling sequence: (SUBR,0)

```
        JMS  ADR
       -N
L1 ,    0
L2 ,    0
  .
  .
  .
LN ,    0
(Return)
```

where SUBR is the name of a subroutine that requires arguments in its calling sequence, N is the number of arguments used in calling SUBR, and L_i is the label of the temporary location within the subroutine SUBR of the ith argument.

Limitations: JMS ADR must be located immediately following the entry to SUBR. The AC must be clear upon entry to SUBR and ADR.

Basic system

*INWT, Initialize and Wait

Purpose: To initialize all the interrupt programs, enable interrupts, and go into the waiting loop at OMGA. This is the start of the overall program.

Calling sequence: (IOF)

JMP INWT

(There is no return)

Limitations: Interrupts must be inhibited when INWT is entered. INWT cancels any characters waiting in the output buffer.

OMGA, Terminate Main Program and Wait

Purpose: To provide a waiting loop at which every main program should terminate. A carriage return, line feed is put out upon entering OMGA. The AC displays 7070 while the program remains in this loop. BLCK is set to zero. (See PUT.)

Calling sequence: JMP OMGA

(There is no return)

Limitations: OMGA must be entered only from a main program.

*TSIN, Terminate Interrupt

Purpose: To provide a common termination for all interrupt programs. The link and AC are restored, interrupts are enabled and control is returned to the main program.

Calling sequence: JMP TSIN

(There is no return)

*INIC, Initialize Clock Routines

Purpose: To initialize the clock-interrupt routine. This subroutine is normally entered once at the start of the overall program.

Calling sequence: JMS INIC

(Return)

Keyboard/reader

IPCH, Input Character

Purpose: To cause a single character to be read from the keyboard/reader and to delay the program until this character is received. When the program is waiting for input a 7000 is displayed in the AC.

Calling sequence: JMS IPCH

(Return with ASCII character in AC)

Limitations: If used with the paper-tape reader the internal switch must be on 6004. IPCH does not ignore leader or any other character.

All input must be via this routine.

*INIK, Initialize Keyboard/Reader

Purpose: To initialize the keyboard/reader routines. This subroutine is normally entered once at the start of the overall program.

Calling sequence: JMS INIK

(Return)

Limitations: The use of this subroutine is restricted to the start of the overall program. Interrupts must be inhibited when it is used.

Teleprinter/punch

OPCH, Output Character

Purpose: To cause a single character to be stored in a buffer and put out as soon as the teleprinter/punch is ready for it. Up to 16 characters may be stored without delaying the calling program. Channel 8 is set to make the character have odd parity.

Calling sequence: TAD ASCII character

JMS OPCH

(Return with AC = 0)

Limitations: All output must be via this routine.

*INIP, Initialize Teleprinter/Punch Routines

Purpose: To initialize the teleprinter/punch routines. This subroutine is normally entered once at the start of the overall program.

Calling sequence: JMS INIP

(Return)

Limitations: The use of this subroutine is restricted to the start of the overall program. Interrupts must be inhibited when it is used.

Counting routines

STCT, Start Data Count

Purpose: To initiate data counting for a period of N/10 seconds. Counting actually starts at the next tenth-second interrupt and terminates N/10 seconds later.

Calling sequence: JMS STCT

-N

(Return. The main program can now proceed independently during the counting for as long as the programmer desires. Eventually the program should enter subroutine WTCT to wait for completion of count.)

WTCT, Wait for Completion of Data Count

Purpose: To delay the main program until the data count initiated by STCT has been completed, and then to return the count as a floating-point number to a specified location.

Calling sequence: JMS WTCT

(Address for floating-point count)

(Error return)

(Normal return)

Limitations: If count rate exceeds 60,000 counts per second, counting is terminated prematurely. WTCT then returns to the error return without storing a count.

Motor routines

WHERE, Obtain the Current Shaft Positions

Purpose: To convert the current shaft positions to floating-point numbers expressed as degrees and store them at TTH, OMG, CHI, and PHI.

Calling sequence: JMS WHERE

(Return)

*SETUP, Separate Angle Into Degrees and 200ths

Purpose: To express a floating-point angle, A, in terms of two fixed point integers, D and H, so that

$$A = D + H/200$$

where $0 \leqslant H \leqslant 199.$

A is rounded to the nearest multiple of 0.005 degrees.

Calling sequence: (Angle A in floating AC)

JMS SETUP

(Address for storing D. H will be stored in the next location.)

(Return)

MOTOR, Start One Motor

Purpose: To compare the current position of a motor with the desired position and to decide the shortest path and the direction of movement required to drive from the current to the desired position. Arguments and indicators are set so that the motor will be started slowly and pulsed to the desired position by the clock-interrupt routines. If the motor is already at the desired position it is not started.

Calling sequence: (Store the desired position in degrees as a floating-point number at TTH, OMG, CHI, or PHI.)

JMS MOTOR

(MIT, MIO, MIC, or MIP. This specifies the motor to be driven and locates the temporaries associated with it.)

(Return. The main program can now proceed independently while the motors are running. Eventually the program probably should enter WMOT to wait for the motors to stop.)

MOTST, Start All Motors

Purpose: To compare the current positions of the motors with the desired positions and to decide the direction of movement. Arguments and indicators are set so that the motors will be started slowly and pulsed to their desired positions by the clock-interrupt routines. A motor which is already at its desired position is not started.

Calling sequence: (Store the desired positions in degrees as floating-point numbers at TTH, OMG, CHI, and PHI.)

JMS MOTST

(Return. The main program can now proceed independently while the motors are running. Eventually the program probably should enter WMOT to wait for the motors to stop.)

MOTSET, Start Motors Driving to Calculated Angles

Purpose: To transfer four calculated angles to the array of desired shaft positions and start the motors.

Calling sequence: (Store the desired positions in degrees as floating-point numbers at CTTH, COMG, CCHI, and CPHI.)

JMS MOTSET

(Return. The main program can now proceed independently while the motors are running. Eventually the program probably should enter WMOT to wait for the motors to stop.)

WMOT, Wait for Motors to Stop

Purpose: To delay the program until all motors have reached their destinations and stopped.

Calling sequence: JMS WMOT

(Return)

*INIM, Initialize Motors

Purpose: To set each motor indicator to zero, i.e., to stop all motors. This subroutine should be entered only with interrupts disabled.

Calling sequence: JMS INIM

(Return)

CHECK, Check Angle Readings

Purpose: Drive the motors backward and then forward to check the photoelectric-marker position. After this operation any errors in position should have been corrected. Final shaft position is the same as the nominal position before checking.

Calling sequence: JMS CHECK

N

(Error return)

(Normal return)

where N is 1 if results of check procedure are to be printed or 0 if they are not to be printed. CHECK returns to the error return if a marker was not received or if an error of over .05 degrees was found. In all cases the accumulated errors ERT, etc., and TISE, etc., are cleared to zero.

*DRVCK, Drive Motors for Checking

Purpose: Used by subroutine CHECK to drive motors 2 degrees forward or backward, according to the argument used.

Calling sequence: JMS DRVCK

(Variable instruction)

(Return)

where the variable instruction is either FSUB TWO if the motors are to go backward 2 degrees or FADD TWO if the motors are to go forward 2 degrees. (TWO is the floating-point constant, +2, located on page zero.)

Chart recorder

REC, Record

Purpose: To multiply floating-point COUNT (page zero) by FACTOR which has been previously set, and call CREC to chart this scaled count.

Calling sequence: JMS REC

(Return)

Limitations: If the count after scaling is greater than full scale, it is set equal to full scale.

CREC, Chart Recorder

Purpose: To cause the chart recorder to plot a single step after the pen has moved to a desired position.

Calling sequence: (TAD N)

JMS CREC

(Return with AC = 0)

Here N is an integer which defines the pen position. For N = 0 the pen is at the base line and a full-scale reading is obtained with N = 934. A short negative range is also attainable provided that $-89 \leqslant N \leqslant 934$.

Limitations: The chart recorder hardware takes a period of 0.5 seconds to complete its cycle. This does not delay the program unless CREC is entered again within 0.5 seconds of a previous entry. In this case a programmed time delay in CREC prevents it from proceeding until the chart-recorder cycle is completed.

External devices

DCR, Modify Control Register

Purpose: To turn on or off various flip-flops of the register which controls counting, and the shutter, filters, and attenuators. The programmer provides an ARG and a MASK. The subroutine leaves unchanged bits of the control register which correspond to ones in the MASK. Bits which correspond to zeros in the MASK are set to one or zero according to the corresponding bits in ARG.

Calling sequence: (ARG in AC)

```
JMS  DCR
MASK
(Return with AC = 0)
```

Limitations: ARG must not have ones in positions where MASK has ones or the control register will be set incorrectly.

FLTR, Control Positions of the Two Filters

Purpose: The two filters are set in or out according to whether the two low-order bits of an integer N are one or zero respectively.

Calling sequence: (N in AC)

```
JMS FLTR
(Return with AC = 0)
```

SHUTR, Control the Shutter Position

Purpose: The shutter is closed or opened according to whether the low-order bit of an integer N is zero or one, respectively.

Calling sequence: (N in AC)

```
JMS  SHUTR
(Return with AC = 0)
```

ATTEN, Control Positions of Three Attenuators

Purpose: To set the three attenuators in or out according to whether the three low-order bit positions of an integer N are one or zero, respectively.

Calling sequence: (N in AC)

```
JMS  ATTEN
(Return with AC = 0)
```

Audio output

CODE, Change Audio Output Code

Purpose: To set up a Morse-code pattern which will be put out repeatedly as an audible signal.

Calling sequence: JMS CODE

A

B

(Return)

Here A and B are words which describe the desired Morse-code pattern. Each of the 24 bits of these words represents a time period of 0.3 seconds. If the bit is a one there will be a 300-cps audio tone put out during this period. If the bit is zero no tone will be put out. The bits are taken in the sequence A_0, A_1, ... A_{11}, B_0, ... B_{11}, A_0, etc. Thus the letter Q, -.-- in Morse code, could be represented as

A B

111 010 111 011 100 000 000 000 or 7273 4000 octal.

Limitation: Because of space limitations this subroutine is available only in the data-collection programs.

AVAILABLE MEMORY LOCATIONS

Listed below are the first and last addresses (octal) and the number of locations (decimal) in each area of memory not used by the program named. These are tabulated only for the routines without modification, and the user should check the program listings carefully before making changes.

Basic program	
0004-0004	1
0012-0016	5
0101-0137	31**
0176-0177	2
0577-0623	21
0640-0777	96
1166-1173	6
1177-1177	1
1344-1362	15
1577-1577	1
1777-1777	1
2207-2305	63#
2547-2577	25
2751-4500	856
4525-4525	1
4776-4777	2
5371-5377	7
5577-5577	1
5775-5777	3
6173-6177	5
6375-6377	3
6573-6577	5
6763-6765	3
6776-6777	2
7174-7177	4
7377-7377	1
7556-7713	94##

Least-squares program*	
0012-0016	5
0136-0137	2**
0765-0777	11
1174-1177	4
1776-1777	2
2177-2177	1
2212-2212	1
2576-2600	3
4177-4177	1
4374-4377	4
4476-4500	3
4525-4525	1
4776-4777	2
5371-5377	7
5577-5577	1
5775-5777	3
6173-6177	5
6375-6377	3
6573-6577	5
6763-6765	3
6776-6777	2
7174-7177	4
7377-7377	1
7556-7577	18
7633-7713	49##

*Including constraints.

**Common storage.

#Additions to signal table should go here.

##Usually saved for utility routines.

Set-up program*		Data collection*	
0004-0004	1	0004-0004	1
0012-0016	5	0012-0014	3
0177-0177	1	0016-0016	1
0776-0777	2	0176-0177	2
1166-1173	6	0577-0577	1
1177-1177	1	0617-0623	5
1344-1362	15	0773-0777	5
1577-1577	1	1166-1173	6
1777-1777	1	1177-1177	1
2265-2271	5#	1577-1577	1
2547-2550	2	1777-1777	1
2576-2577	2	2260-2271	10#
2751-2753	3	2547-2577	25
3171-3177	7	2777-2777	1
3576-3577	2	3031-3031	1
3641-3646	6	3052-3053	2
3765-3766	2	3557-3575	15†
3775-3777	3	3775-3777	3
4174-4177	4	4123-4124	2
4366-4377	10	4776-4777	2
4776-4777	2	5371-5377	7
5371-5377	7	5577-5577	1
5577-5577	1	5775-5777	3
5775-5777	3	6173-6177	5
6173-6177	5	6375-6377	3
6375-6377	3	6573-6577	5
6573-6577	5	6763-6765	3
6763-6765	3	6776-6777	2
6776-6777	2	7174-7177	4
7174-7177	4	7377-7377	1
7377-7377	1	7556-7577	18
7633-7713	49##	7633-7713	49##

*For either bisecting or parallel position.

#Additions to signal table should go here.

†This space may be saved for rejection tests.

##Usually saved for utility routines.

PROGRAM LISTINGS

```
                /ARITHMETIC ROUTINES                                          /ARI   1
                /REVISED TO USE FINAL DEC VERSION OF FPNT.                    /ARI   2
                /TABLE6 NOW HAS SPACE FOR ADDITIONAL EXTENDED OPERATIONS.     /ARI   3
                                                                              /ARI   4
                *4501                                                         /ARI   5
                /SET ARGUMENTS FOR A SUBROUTINE                               /ARI   6
                MTWO#155                                                      /ARI   7
4501      0     ADR, 0                                                      /ARI   8
4502   1701           TAD I ADR      /SET COUNTER                             /ARI   9
4503   3324           DCA ADRK                                                /ARI  10
4504   1155           TAD MTWO       /GET LOCATION OF SUBROUTINE              /ARI  11
4505   1301           TAD ADR                                                 /ARI  12
4506   3322           DCA ADRA                                                /ARI  13
4507   1722           TAD I ADRA     /GET LOCATION OF ARGUMENTS               /ARI  14
4510   3323           DCA ADRB                                                /ARI  15
4511   2722     ADRS, ISZ I ADRA     /SET EXIT FOR CALLING SUBROUTINE         /ARI  16
4512   2301           ISZ ADR        /SET LOCATION FOR STORING ARGUMENTS      /ARI  17
4513   1723           TAD I ADRB     /GET ARGUMENT                            /ARI  18
4514   3701           DCA I ADR      /STORE ARGUMENT IN TEMPORARY             /ARI  19
4515   2323           ISZ ADRB                                                /ARI  20
4516   2324           ISZ ADRK                                                /ARI  21
4517   5311           JMP ADRS                                                /ARI  22
4520   2301           ISZ ADR        /SET EXIT                                /ARI  23
4521   5701           JMP I ADR      /RETURN TO CALLING SUBROUTINE            /ARI  24
4522      0     ADRA,0               /LOCATION OF SUBROUTINE                  /ARI  25
4523      0     ADRB,0               /LOCATION OF ARGUMENTS                   /ARI  26
4524      0     ADRK,0               /COUNTER                                 /ARI  27


                *4526                                                         /ARI  29
                COMN#100                                                      /ARI  30
                LCOP#24                                                       /ARI  31
                BLCK#77                                                       /ARI  32
                                                                              /ARI  33
                /COPY BLOCK OF STORAGE ONTO PAGE ZERO                         /ARI  34
4526      0     GET, 0                                                      /ARI  35
4527   4353           JMS          PUT      /PUT AWAY PREVIOUS BLOCK          /ARI  36
4530   1726           TAD    I     GET      /PICK UP BLOCK LOCATION           /ARI  37
4531   3347           DCA          A                                          /ARI  38
4532   1347           TAD          A        /STORE BLOCK LOCATION             /ARI  39
4533   3077           DCA          BLCK                                       /ARI  40
4534   1477           TAD    I     BLCK     /TEST COUNTER OF NUMBER OF        /ARI  41
4535   7500           SMA                    /WORDS IN THE BLOCK               /ARI  42
4536   7402           HLT                    /HALT IF NOT NEGATIVE             /ARI  43
4537   1377           TAD          K32      /TEST WHETHER LESS THAN -32       /ARI  44
4540   7710           SPA    CLA                                              /ARI  45
4541   7402           HLT                    /HALT IF LESS THAN -32            /ARI  46
4542   1477           TAD    I     BLCK     /SET COUNTER FOR COPY             /ARI  47
4543   3346           DCA          GETN                                       /ARI  48
4544   2347           ISZ          A        /ADVANCE TO ADDRESS OF FIRST WORD /ARI  49
4545   4424           JMS    I     LCOP     /COPY BLOCK TO PAGE ZERO          /ARI  50
4546      0     GETN, 0                                                      /ARI  51
4547      0     A,    0                                                      /ARI  52
4550    100           COMN                                                   /ARI  53
4551   2326           ISZ          GET      /RETURN                           /ARI  54
4552   5726           JMP    I     GET                                        /ARI  55
                                                                              /ARI  56
                /COPY FROM PAGE ZERO TO BLOCK OF STORAGE                      /ARI  57
4553      0     PUT,  0                                                      /ARI  58
4554   1077           TAD          BLCK                                       /ARI  59
4555   7450           SNA                    /RETURN IF BLCK#0                 /ARI  60
4556   5753           JMP    I     PUT                                        /ARI  61
4557   7001           IAC                                                     /ARI  62
4560   3374           DCA          B                                          /ARI  63
4561   1477           TAD    I     BLCK     /TEST COUNTER OF NUMBER OF        /ARI  64
4562   7500           SMA                    /WORDS IN THE BLOCK               /ARI  65
4563   7402           HLT                    /HALT IF COUNTER NOT NEGATIVE     /ARI  66
4564   1377           TAD          K32      /TEST WHETHER LESS THAN -32       /ARI  67
4565   7710           SPA    CLA                                              /ARI  68
4566   7402           HLT                    /HALT IF LESS THAN -32            /ARI  69
4567   1477           TAD    I     BLCK     /SET COUNTER FOR COPY             /ARI  70
4570   3372           DCA          PUTN                                       /ARI  71
4571   4424           JMS    I     LCOP     /COPY BLOCK FROM PAGE ZERO TO BLOCK /ARI 72
4572      0     PUTN, 0                                                      /ARI  73
4573    100           COMN                                                   /ARI  74
4574      0     B,    0                                                      /ARI  75
4575   3077           DCA          BLCK     /SET BLCK#0                       /ARI  76
4576   5753           JMP    I     PUT      /RETURN                           /ARI  77
4577     40     K32,  0040                                                   /ARI  78
```

```
                LFNK#5                                                          /ARI  80
                LFOT#6                                                          /ARI  81
                LFPT#7                                                          /ARI  82
                COMN#100                                                        /ARI  83
                LADR#23                                                         /ARI  84
                THR#154                                                         /ARI  85
                *4600                                                           /ARI  86
                                                                                /ARI  87
                /INPUT OF A STRING OF FLOATING POINT NUMBERS                    /ARI  88
4600     0      FINP,0                                                          /ARI  89
4601  4423           JMS   I     LADR  /SET COUNTER AND ADDRESS FOR STORING INPUT /ARI  90
4602  7776           -2                                                          /ARI  91
4603     0      FK,  0                                                          /ARI  92
4604     0      FADR,0                                                          /ARI  93
4605  4405      FINS,JMS   I     LFNK  /PUT NUMBER INTO F.A.                     /ARI  94
4606  4407           JMS   I     LFPT  /STORE NUMBER IN DESIRE LOC.              /ARI  95
4607  6604           FPUT  I     FADR                                            /ARI  96
4610     0           FEXT                                                        /ARI  97
4611  1154           TAD         THR   /ADVANCE ADDRESS                          /ARI  98
4612  1204           TAD         FADR                                            /ARI  99
4613  3204           DCA         FADR                                            /ARI 100
4614  2203           ISZ         FK    /TEST COUNTER                             /ARI 101
4615  5205           JMP         FINS                                            /ARI 102
4616  5600           JMP   I     FINP  /RETURN                                   /ARI 103
                                                                                /ARI 104
                /OUTPUT OF A STRING OF FLOATING POINT NUMBERS                   /ARI 105
4617     0      FOPT,0                                                          /ARI 106
4620  4423           JMS   I     LADR  /GET NUMBER AND ADDRESS OF NUMBERS TO BE PUT OUT /ARI 107
4621  7776           -2                                                          /ARI 108
4622     0      FOPK,0                                                          /ARI 109
4623     0      FLOC,0                                                          /ARI 110
4624  4407      FOPS,JMS   I     LFPT                                            /ARI 111
4625  5623           FGET  I     FLOC  /PUT NUMBER IN F. A.                      /ARI 112
4626     0           FEXT                                                        /ARI 113
4627  4406           JMS   I     LFOT  /PRINT                                    /ARI 114
4630  1154           TAD         THR   /ADVANCE ADDRESS                          /ARI 115
4631  1223           TAD         FLOC                                            /ARI 116
4632  3223           DCA         FLOC                                            /ARI 117
4633  2222           ISZ         FOPK  /TEST COUNTER                             /ARI 118
4634  5224           JMP         FOPS                                            /ARI 119
4635  5617           JMP   I     FOPT  /RETURN                                   /ARI 120
                                                                                /ARI 121
                /NORMALIZE A VECTOR TO UNITY                                    /ARI 122
4636     0      UNIT, 0                                                         /ARI 123
4637  1636           TAD   I     UNIT  /STORE ADDRESS OF VECTOR IN V1            /ARI 124
4640  3252           DCA         V1    /AND V2                                   /ARI 125
4641  1252           TAD         V1                                              /ARI 126
4642  3253           DCA         V2                                              /ARI 127
4643  2236           ISZ         UNIT                                            /ARI 128
4644  1636           TAD   I     UNIT  /GET ADDRESS FOR STORING UNIT VECTOR      /ARI 129
4645  3365           DCA         UV                                              /ARI 130
4646  2236           ISZ         UNIT  /SET EXIT                                 /ARI 131
4647  1363           TAD         NEG3  /SET COUNTER                              /ARI 132
4650  3364           DCA         UNTK                                            /ARI 133
4651  4701           JMS   I     LVV   /CALCULATE LENGTH SQUARED                 /ARI 134
4652     0      V1,  0                                                          /ARI 135
4653     0      V2,  0                                                          /ARI 136
4654  4705           LV                                                          /ARI 137
4655  4407           JMS   I     LFPT  /GET LENGTH                               /ARI 138
4656  5305           FGET        LV                                              /ARI 139
4657     2           FSQT                                                        /ARI 140
4660     0           FEXT                                                        /ARI 141
4661  4407      UNTA, JMS   I     LFPT  /GET UNIT VECTOR                          /ARI 142
4662  6305           FPUT        LV                                              /ARI 143
4663  5652           FGET  I     V1                                              /ARI 144
4664  4305           FDIV        LV                                              /ARI 145
4665  6765           FPUT  I     UV                                              /ARI 146
4666  5305           FGET        LV                                              /ARI 147
4667     0           FEXT                                                        /ARI 148
4670  1252           TAD         V1    /ADVANCE ADDRESSES                        /ARI 149
4671  1154           TAD         THR                                             /ARI 150
4672  3252           DCA         V1                                              /ARI 151
4673  1365           TAD         UV                                              /ARI 152
4674  1154           TAD         THR                                             /ARI 153
4675  3365           DCA         UV                                              /ARI 154
4676  2364           ISZ         UNTK  /TEST COUNTER                             /ARI 155
4677  5261           JMP         UNTA                                            /ARI 156
4700  5636           JMP   I     UNIT  /RETURN                                   /ARI 157
4701  5045      LVV, 5045                                                       /ARI 158
                                                                                /ARI 159
```

```
          /COMPUTE UNIT VECTOR, Z, PERPENDICULAR TO TWO GIVEN VECTORS, X AND Y     /ARI 160
          X1#COMN                                                                  /ARI 161
          X2#COMN+3                                                                /ARI 162
          X3#COMN+6                                                                /ARI 163
          Y1#COMN+11                                                               /ARI 164
          Y2#COMN+14                                                               /ARI 165
          Y3#COMN+17                                                               /ARI 166
          Z1#COMN+22                                                               /ARI 167
          Z2#COMN+25                                                               /ARI 168
          Z3#COMN+30                                                               /ARI 169
          TEMP#COMN+30                                                             /ARI 170
4702    0 PERP,   0                                                                /ARI 171
4703 4423         JMS I LADR                                                       /ARI 172
4704 7775         -3                                                               /ARI 173
4705    0 AX1,LV, 0                                                                /ARI 174
4706    0 AY1,    0                                                                /ARI 175
4707    0 AZ1,    0                                                                /ARI 176
4710 1305         TAD AX1                                                          /ARI 177
4711 3320         DCA LX1                                                          /ARI 178
4712 1306         TAD AY1                                                          /ARI 179
4713 3324         DCA LY1                                                          /ARI 180
4714 1307         TAD AZ1                                                          /ARI 181
4715 3357         DCA LZ1                                                          /ARI 182
4716 4361         JMS COPY            /COPY VECTORS TO PAGE ZERO                   /ARI 183
4717 7767         -11                                                              /ARI 184
4720    0 LX1,    0                                                                /ARI 185
4721  100         X1                                                               /ARI 186
4722 4361         JMS COPY                                                         /ARI 187
4723 7767         -11                                                              /ARI 188
4724    0 LY1,    0                                                                /ARI 189
4725  111         Y1                                                               /ARI 190
4726 4407         JMS I LFPT          /CALCULATE PERPENDICULAR VECTOR              /ARI 191
4727 5106         FGET X3             /Z1#X2*Y3-X3*Y2                              /ARI 192
4730 3114         FMPY Y2                                                          /ARI 193
4731 6130         FPUT TEMP                                                        /ARI 194
4732 5103         FGET X2                                                          /ARI 195
4733 3117         FMPY Y3                                                          /ARI 196
4734 2130         FSUB TEMP                                                        /ARI 197
4735 6122         FPUT Z1                                                          /ARI 198
4736 5100         FGET X1             /Z2#X3*Y1 X1*Y3                              /ARI 199
4737 3117         FMPY Y3                                                          /ARI 200
4740 6130         FPUT TEMP                                                        /ARI 201
4741 5106         FGET X3                                                          /ARI 202
4742 3111         FMPY Y1                                                          /ARI 203
4743 2130         FSUB TEMP                                                        /ARI 204
4744 6125         FPUT Z2                                                          /ARI 205
4745 5103         FGET X2             /Z3#X1*Y2 X2*Y1                              /ARI 206
4746 3111         FMPY Y1                                                          /ARI 207
4747 6130         FPUT TEMP                                                        /ARI 208
4750 5100         FGET X1                                                          /ARI 209
4751 3114         FMPY Y2                                                          /ARI 210
4752 2130         FSUB TEMP                                                        /ARI 211
4753 6130         FPUT Z3                                                          /ARI 212
4754    0         FEXT                                                             /ARI 213
4755 4236         JMS UNIT            /NORMALIZE THE PERPENDICULAR TO UNITY        /ARI 214
4756  122         Z1                                                               /ARI 215
4757    0 LZ1,    0                   /STORE RESULT IN SPECIFIED ADDRESS           /ARI 216
4760 5702         JMP I PERP                                                       /ARI 217
                                                                                   /ARI 218
          /COPY FROM ONE AREA OF MEMORY INTO ANOTHER                               /ARI 219
4761    0 COPY, 0                                                                  /ARI 220
4762 4423       JMS   I     LADR  /GET NUMBERS OF LOCATIONS TO BE COPIED, ADDRESS /ARI 221
4763 7775 NEG3, -3                /WHICH TO COPY, AND ADDRESS TO COPY INTO       /ARI 222
4764    0 COPK,UNTK,0                                                              /ARI 223
4765    0 COPA,UV,0                                                                /ARI 224
4766    0 COPB, 0                                                                  /ARI 225
4767 1765 COPS, TAD   I     COPA                                                   /ARI 226
4770 3766       DCA   I     COPB                                                   /ARI 227
4771 2365       ISZ         COPA  /ADVANCE ADDRESSES                               /ARI 228
4772 2366       ISZ         COPB                                                   /ARI 229
4773 2364       ISZ         COPK  /TEST COUNTER                                    /ARI 230
4774 5367       JMP         COPS                                                   /ARI 231
4775 5761       JMP   I     COPY  /RETURN                                          /ARI 232


          LFPT#7                                                                   /ARI 234
          LADR#23                                                                  /ARI 235
          LCOP#24                                                                  /ARI 236
          THR#154                                                                  /ARI 237
          *5000                                                                    /ARI 238
```

```
                                                                                  /ARI 239
            /TRANSPOSE A 3X3 MATRIX                                               /ARI 240
5000    0   TRAN, 0                                                               /ARI 241
5001 1600         TAD   I      TRAN  /GET ADDRESS OF MATRIX TO BE TRANSPOSED      /ARI 242
5002 3217         DCA          M                                                 /ARI 243
5003 2200         ISZ          TRAN                                              /ARI 244
5004 1600         TAD   I      TRAN  /GET ADDRESS FOR STORING TRANSPOSE          /ARI 245
5005 3313         DCA          LT                                                /ARI 246
5006 2200         ISZ          TRAN                                              /ARI 247
5007 1255         TAD          MTHR                                              /ARI 248
5010 3345         DCA          K2                                                /ARI 249
5011 1313   BEG,   TAD         LT                                                /ARI 250
5012 3220         DCA          T                                                 /ARI 251
5013 1255         TAD          MTHR                                              /ARI 252
5014 3312         DCA          K1                                                /ARI 253
5015 4424   ENTR, JMS   I      LCOP  /COPY M(I,J) INTO T(J,I)                    /ARI 254
5016 7775         -3                                                             /ARI 255
5017    0   M,    0                                                              /ARI 256
5020    0   T,    0                                                              /ARI 257
5021 1217         TAD          M     /ADVANCE ADDRESSES                          /ARI 258
5022 1154         TAD          THR                                               /ARI 259
5023 3217         DCA          M                                                 /ARI 260
5024 1220         TAD          T                                                 /ARI 261
5025 1306         TAD          NINE                                              /ARI 262
5026 3220         DCA          T                                                 /ARI 263
5027 2312         ISZ          K1    /TEST COUNTER                               /ARI 264
5030 5215         JMP          ENTR                                              /ARI 265
5031 1313         TAD          LT    /ADVANCE TO NEW ROW OF TRANSPOSE            /ARI 266
5032 1154         TAD          THR                                               /ARI 267
5033 3313         DCA          LT                                                /ARI 268
5034 2345         ISZ          K2                                                /ARI 269
5035 5211         JMP          BEG                                               /ARI 270
5036 5600         JMP   I      TRAN  /RETURN                                     /ARI 271
                                                                                  /ARI 272
                                                                                  /ARI 273
            /FLOATING POINT 3*3 MATRIX AND VECTOR MULTIPLICATION PACKAGE FOR PDP-5 /ARI 274
                                                                                  /ARI 275
5037    0   RV,   0              /ROW OF MATRIX * COLUMN VECTOR                  /ARI 276
5040 1306         TAD  NINE      /GET INCREMENT FOR ROW VECTOR                   /ARI 277
5041 3313         DCA  DEL                                                       /ARI 278
5042 1237         TAD  RV        /MOVE RETURN ADDRESS                            /ARI 279
5043 3253         DCA  VVS                                                       /ARI 280
5044 5254         JMP  VVS+1                                                     /ARI 281
                                                                                  /ARI 282
5045    0   VV,   0              /COLUMN VECTOR * COLUMN VECTOR                  /ARI 283
5046 1154         TAD   THR      /SET INCREMENT FOR COLUMN VECTOR                /ARI 284
5047 3313         DCA  DEL                                                       /ARI 285
5050 1245         TAD  VV        /MOVE RETURN ADDRESS                            /ARI 286
5051 3253         DCA  VVS                                                       /ARI 287
5052 5254         JMP  VVS+1                                                     /ARI 288
                                                                                  /ARI 289
5053    0   VVS,  0              /GENERAL SUBROUTINE                             /ARI 290
5054 4423         JMS  I   LADR /STORE ADDRESSES                                 /ARI 291
5055 7775   MTHR, -3                                                             /ARI 292
5056    0   VVA,  0              /ADDRESSES OF ARGUMENTS                         /ARI 293
5057    0   VVB,  0                                                             /ARI 294
5060    0   VVC,  0                                                             /ARI 295
5061 4407         JMS  I   LFPT /CLEAR C                                         /ARI 296
5062 5307         FGET ZERO                                                      /ARI 297
5063 6660         FPUT I VVC                                                     /ARI 298
5064    0         FEXT                                                           /ARI 299
5065 1255         TAD  MTHR      /SET COUNTER                                    /ARI 300
5066 3312         DCA  VVK                                                       /ARI 301
5067 4407   VVL,  JMS  I   LFPT /C#C+A(I)*B(I)                                   /ARI 302
5070 5656         FGET I VVA                                                     /ARI 303
5071 3657         FMPY I VVB                                                     /ARI 304
5072 1660         FADD I VVC                                                     /ARI 305
5073 6660         FPUT I VVC                                                     /ARI 306
5074    0         FEXT                                                           /ARI 307
5075 1256         TAD  VVA       /ADVANCE ADDRESSES                              /ARI 308
5076 1313         TAD  DEL                                                       /ARI 309
5077 3256         DCA  VVA                                                       /ARI 310
5100 1257         TAD  VVB                                                       /ARI 311
5101 1154         TAD   THR                                                      /ARI 312
5102 3257         DCA  VVB                                                       /ARI 313
5103 2312         ISZ  VVK       /TEST COUNTER                                   /ARI 314
5104 5267         JMP  VVL                                                       /ARI 315
5105 5653         JMP  I VVS     /RETURN                                         /ARI 316
5106   11   NINE,11                                                             /ARI 317
5107    0   ZERO,0                                                              /ARI 318
5110    0         0                                                             /ARI 319
```

```
5111     0        0                                                    /ARI 320
5112     0  VVK,K1,0            /COUNTER                               /ARI 321
5113     0  DEL,LT,0            /INCREMENT FOR ADVANCING VVA           /ARI 322
                                                                       /ARI 323
5114     0  MV,   0             /MATRIX * COLUMN VECTOR                /ARI 324
5115  1714        TAD  I MV     /STORE ADDRESSES                       /ARI 325
5116  3331        DCA  MVA                                             /ARI 326
5117  2314        ISZ  MV                                              /ARI 327
5120  1714        TAD  I MV                                            /ARI 328
5121  3332        DCA  MVB                                             /ARI 329
5122  2314        ISZ  MV                                              /ARI 330
5123  1714        TAD  I MV                                            /ARI 331
5124  3333        DCA  MVC                                             /ARI 332
5125  2314        ISZ  MV       /SET EXIT                              /ARI 333
5126  1255        TAD  MTHR     /SET COUNTER                           /ARI 334
5127  3345        DCA  MVK                                             /ARI 335
5130  4237  MVL,  JMS  RV       /MATRIX ROW * COLUMN VECTOR            /ARI 336
5131     0  MVA,  0                                                   /ARI 337
5132     0  MVB,  0                                                   /ARI 338
5133     0  MVC,  0                                                   /ARI 339
5134  1331        TAD  MVA      /ADVANCE ADDRESSES                     /ARI 340
5135  1154        TAD   THR                                            /ARI 341
5136  3331        DCA  MVA                                             /ARI 342
5137  1333        TAD  MVC                                             /ARI 343
5140  1154        TAD   THR                                            /ARI 344
5141  3333        DCA  MVC                                             /ARI 345
5142  2345        ISZ  MVK      /TEST COUNTER                          /ARI 346
5143  5330        JMP  MVL                                             /ARI 347
5144  5714        JMP  I MV     /RETURN                                /ARI 348
5145     0  MVK,K2,0            /COUNTER                               /ARI 349
                                                                       /ARI 350
5146     0  MM,   0             /MATRIX * MATRIX                       /ARI 351
5147  1746        TAD  I MM     /STORE ADDRESSES                       /ARI 352
5150  3363        DCA  MMA                                             /ARI 353
5151  2346        ISZ  MM                                              /ARI 354
5152  1746        TAD  I MM                                            /ARI 355
5153  3364        DCA  MMB                                             /ARI 356
5154  2346        ISZ  MM                                              /ARI 357
5155  1746        TAD  I MM                                            /ARI 358
5156  3365        DCA  MMC                                             /ARI 359
5157  2346        ISZ  MM       /SET EXIT                              /ARI 360
5160  1255        TAD  MTHR     /SET COUNTER                           /ARI 361
5161  3377        DCA  MMK                                             /ARI 362
5162  4314  MML,  JMS  MV       /MATRIX * MATRIX COLUMN                /ARI 363
5163     0  MMA,  0                                                   /ARI 364
5164     0  MMB,  0                                                   /ARI 365
5165     0  MMC,  0                                                   /ARI 366
5166  1364        TAD  MMB      /ADVANCE ADDRESSES                     /ARI 367
5167  1306        TAD  NINE                                            /ARI 368
5170  3364        DCA  MMB                                             /ARI 369
5171  1365        TAD  MMC                                             /ARI 370
5172  1306        TAD  NINE                                            /ARI 371
5173  3365        DCA  MMC                                             /ARI 372
5174  2377        ISZ  MMK      /TEST COUNTER                          /ARI 373
5175  5362        JMP  MML                                             /ARI 374
5176  5746        JMP  I MM     /RETURN                                /ARI 375
5177     0  MMK,  0             /COUNTER                               /ARI 376


           *5200                                                       /ARI 378
           MAC#6000                                                    /ARI 379
           OVR2#47                                                     /ARI 380
           LFPT#7                                                      /ARI 381
           LFIX#34                                                     /ARI 382
                                                                       /ARI 383
           /CALCULATE SINE OF NUMBER IN THE FLOATING POINT ACCUMULATOR /ARI 384
5200     0  SINE, 0                                                   /ARI 385
5201  7200        CLA                                                  /ARI 386
5202  3317        DCA          PNTR                                    /ARI 387
5203  1045        TAD          45     /IS X NEGATIVE                   /ARI 388
5204  7740        SMA   SZA    CLA                                     /ARI 389
5205  5213        JMP          MOD                                     /ARI 390
5206  1045        TAD          45                                      /ARI 391
5207  7700        SMA   CLA                                            /ARI 392
5210  5600        JMP   I      SINE                                    /ARI 393
5211  4303        JMS          NEG                                     /ARI 394
5212  2317        ISZ          PNTR                                    /ARI 395
5213  4407  MOD,  JMS   I      LFPT                                    /ARI 396
5214  3366        FMPY         RAD                                     /ARI 397
```

```
5215  4326        FDIV        TWOP                                          /ARI 398
5216  6323        FPUT        XSQR                                          /ARI 399
5217     0        FEXT                                                      /ARI 400
5220  4434        JMS   I     LFIX                                          /ARI 401
5221  4354        JMS         FLT                                           /ARI 402
5222  4407        JMS   I     LFPT                                          /ARI 403
5223  6320        FPUT        X                                             /ARI 404
5224  5323        FGET        XSQR                                          /ARI 405
5225  2320        FSUB        X                                             /ARI 406
5226  3326        FMPY        TWOP                                          /ARI 407
5227  6320        FPUT        X                                             /ARI 408
5230  2331        FSUB        PI                                            /ARI 409
5231     0        FEXT                                                      /ARI 410
5232  1045        TAD         45     /IS X LESS THAN PI                     /ARI 411
5233  7710        SPA   CLA                                                 /ARI 412
5234  5241        JMP         PICH                                          /ARI 413
5235  4407        JMS   I     LFPT                                          /ARI 414
5236  6320        FPUT        X                                             /ARI 415
5237     0        FEXT                                                      /ARI 416
5240  2317        ISZ         PNTR                                          /ARI 417
5241  4407  PICH, JMS   I     LFPT   /IS X LESS THAN PI/2                   /ARI 418
5242  5320        FGET        X                                             /ARI 419
5243  2334        FSUB        PIOT                                          /ARI 420
5244     0        FEXT                                                      /ARI 421
5245  1045        TAD         45                                            /ARI 422
5246  7710        SPA   CLA                                                 /ARI 423
5247  5255        JMP         ALG                                           /ARI 424
5250  4407        JMS   I     LFPT                                          /ARI 425
5251  5331        FGET        PI                                            /ARI 426
5252  2320        FSUB        X                                             /ARI 427
5253  6320        FPUT        X                                             /ARI 428
5254     0        FEXT                                                      /ARI 429
5255  4407  ALG,  JMS   I     LFPT                                          /ARI 430
5256  5320        FGET        X                                             /ARI 431
5257  4334        FDIV        PIOT                                          /ARI 432
5260  6320        FPUT        X                                             /ARI 433
5261  3320        FMPY        X                                             /ARI 434
5262  6323        FPUT        XSQR                                          /ARI 435
5263  5337        FGET        C9                                            /ARI 436
5264  3323        FMPY        XSQR                                          /ARI 437
5265  1342        FADD        C7                                            /ARI 438
5266  3323        FMPY        XSQR                                          /ARI 439
5267  1345        FADD        C5                                            /ARI 440
5270  3323        FMPY        XSQR                                          /ARI 441
5271  1350        FADD        C3                                            /ARI 442
5272  3323        FMPY        XSQR                                          /ARI 443
5273  1334        FADD        PIOT                                          /ARI 444
5274  3320        FMPY        X                                             /ARI 445
5275     0        FEXT                                                      /ARI 446
5276  1317        TAD         PNTR                                          /ARI 447
5277  7010        RAR                                                       /ARI 448
5300  7630        SZL   CLA                                                 /ARI 449
5301  4303        JMS         NEG                                           /ARI 450
5302  5600  END,  JMP   I     SINE                                          /ARI 451
                                                                            /ARI 452
            /NEGATE THE CONTENTS OF THE FLOATING POINT ACCUMULATOR          /ARI 453
5303     0  NEG,  0                                                        /ARI 454
5304  3047        DCA         OVR2                                          /ARI 455
5305  4707        JMS   I     LMAC                                          /ARI 456
5306  5703        JMP   I     NEG                                           /ARI 457
5307  6000  LMAC, MAC                                                       /ARI 458
                                                                            /ARI 459
            /COMPUTE COSINE OF THE NUMBER IN THE FLOATING POINT ACCUMULATOR /ARI 460
5310     0  COS,  0                 /COS(X)#SIN(X+90)                      /ARI 461
5311  4407        JMS   I     LFPT                                          /ARI 462
5312  1753        FADD  I     LK90                                          /ARI 463
5313     0        FEXT                                                      /ARI 464
5314  1310        TAD         COS    /SET RETURN                            /ARI 465
5315  3200        DCA         SINE                                          /ARI 466
5316  5201        JMP         SINE+1                                        /ARI 467
                                                                            /ARI 468
5317     0  PNTR, 0                 /SYMBOLS AND CONSTANTS                 /ARI 469
5320     0  X,    0                                                        /ARI 470
5321     0        0                                                        /ARI 471
5322     0        0                                                        /ARI 472
5323     0  XSQR, 0                                                        /ARI 473
5324     0        0                                                        /ARI 474
5325     0        0                                                        /ARI 475
5326     3  TWOP, 0003                                                     /ARI 476
5327  3110        3110                                                      /ARI 477
5330  3755        3755                                                      /ARI 478
```

```
5331     2  PI,   0002                                                    /ARI 479
5332  3110         3110                                                    /ARI 480
5333  3755         3755                                                    /ARI 481
5334     1  PIOT, 0001                                                    /ARI 482
5335  3110         3110                                                    /ARI 483
5336  3755         3755                                                    /ARI 484
5337  7764  C9,    7764                                                    /ARI 485
5340  2366         2366                                                    /ARI 486
5341  5735         5735                                                    /ARI 487
5342  7771  C7,    7771                                                    /ARI 488
5343  5466         5466                                                    /ARI 489
5344  6317         6317                                                    /ARI 490
5345  7775  C5,    7775                                                    /ARI 491
5346  2431         2431                                                    /ARI 492
5347  5053         5053                                                    /ARI 493
5350     0  C3,    0000                                                    /ARI 494
5351  5325         5325                                                    /ARI 495
5352   420         0420                                                    /ARI 496
5353  5523  LK90, 5523                                                    /ARI 497
                                                                          /ARI 498
            /CONVERT AN INTEGER TO A FLOATING POINT NUMBER                /ARI 499
5354     0  FLT,   0                    /CONVERTS CONTENTS OF AC TO       /ARI 500
5355  3364         DCA          FLTC+1 /FLOATING POINT NUMBER             /ARI 501
5356  4407         JMS    I     LFPT   /RESULT LEFT IN F.A.               /ARI 502
5357  5363         FGET        FLTC                                       /ARI 503
5360  7000         FNOR                                                   /ARI 504
5361     0         FEXT                                                   /ARI 505
5362  5754         JMP    I     FLT                                        /ARI 506
5363    13  FLTC, 0013                                                   /ARI 507
5364     0         0000                                                   /ARI 508
5365     0         0000                                                   /ARI 509
5366  7773  RAD,   7773                                                   /ARI 510
5367  2167         2167                                                   /ARI 511
5370  6433         6433                                                   /ARI 512


            LFPT#7                                                        /ARI 514
            LNEG#20                                                       /ARI 515
            LABS#21                                                       /ARI 516
            ONE#146                                                       /ARI 517
            DEG#140                                                       /ARI 518
            /COMPUTE ARCTANGENT OF A/B                                    /ARI 519
            *5400                                                         /ARI 520
                                                                          /ARI 521
5400     0  ARTN,0                                                       /ARI 522
5401  3303         DCA          FLAG   /CLEAR INDICATOR                   /ARI 523
5402  1310         TAD          B+1    /SEE IF COSINE IS ZERO             /ARI 524
5403  7640         SZA    CLA                                             /ARI 525
5404  5215         JMP          ART1                                      /ARI 526
5405  4407         JMS    I     LFPT                                      /ARI 527
5406  6304         FPUT         A      /SAVE SINE WHICH WAS IN F.A.       /ARI 528
5407  5323         FGET         K90    /F.A. SET TO 90                    /ARI 529
5410     0         FEXT                                                   /ARI 530
5411  1305  ART2,TAD            A+1    /TEST SINE                         /ARI 531
5412  7710         SPA    CLA                                             /ARI 532
5413  4420         JMS    I     LNEG   /NEGATE F.A. IF SINE NEGATIVE      /ARI 533
5414  5600         JMP    I     ARTN   /RETURN                            /ARI 534
5415  4407  ART1,JMS    I     LFPT                                      /ARI 535
5416  6304         FPUT         A      /SAVE SINE WHICH WAS IN F.A.       /ARI 536
5417  4307         FDIV         B      /CALCULATE TANGENT,A/B             /ARI 537
5420     0         FEXT                                                   /ARI 538
5421  4421         JMS    I     LABS   /TAKE ABSOLUTE VALUE OF TAN        /ARI 539
5422  4407         JMS    I     LFPT                                      /ARI 540
5423  6312         FPUT         X      /SAVE ABS. VALUE OF TAN            /ARI 541
5424  2146         FSUB         ONE    /SEE IF GREATER THAN ONE           /ARI 542
5425     0         FEXT                                                   /ARI 543
5426  1045         TAD          45                                        /ARI 544
5427  7710         SPA    CLA                                             /ARI 545
5430  5240         JMP          ART3                                      /ARI 546
5431  4407         JMS    I     LFPT   /CALCULATE RECIPROCAL              /ARI 547
5432  5146         FGET         ONE                                       /ARI 548
5433  4312         FDIV         X                                         /ARI 549
5434  6312         FPUT         X                                         /ARI 550
5435     0         FEXT                                                   /ARI 551
5436  7240         CLA    CMA           /SET INDICATOR#-1                 /ARI 552
5437  3303         DCA          FLAG                                      /ARI 553
5440  4407  ART3,JMS    I     LFPT   /COMPUTE ARCTANGENT                /ARI 554
5441  5312         FGET         X                                         /ARI 555
5442  3312         FMPY         X                                         /ARI 556
```

```
5443  6315        FPUT        XSQR                                        /ARI 557
5444  3345        FMPY        BET2                                        /ARI 558
5445  1342        FADD        BET1                                        /ARI 559
5446  3315        FMPY        XSQR                                        /ARI 560
5447  1337        FADD        BETZ                                        /ARI 561
5450  6320        FPUT        DEN                                         /ARI 562
5451  5334        FGET        ALF2                                        /ARI 563
5452  3315        FMPY        XSQR                                        /ARI 564
5453  1331        FADD        ALF1                                        /ARI 565
5454  3315        FMPY        XSQR                                        /ARI 566
5455  1326        FADD        ALFZ                                        /ARI 567
5456  3312        FMPY        X                                           /ARI 568
5457  4320        FDIV        DEN    /RESULT IN RADIANS                   /ARI 569
5460  3140        FMPY        DEG    /CONVERT RESULT TO DEGREES           /ARI 570
5461  6320        FPUT        DEN                                         /ARI 571
5462     0        FEXT                                                    /ARI 572
5463  2303        ISZ         FLAG   /TEST INDICATOR                      /ARI 573
5464  5272        JMP         ART4   /JUMP IF INDICATOR NOT SET           /ARI 574
5465  4407        JMS    I    LFPT   /ADJUST QUADRANT OF RESULT           /ARI 575
5466  5323        FGET        K90                                         /ARI 576
5467  2320        FSUB        DEN                                         /ARI 577
5470  6320        FPUT        DEN                                         /ARI 578
5471     0        FEXT                                                    /ARI 579
5472  1310  ART4, TAD         B+1                                         /ARI 580
5473  7700        SMA    CLA          /ADJUST TO CORRECT QUADRANT         /ARI 581
5474  5211        JMP         ART2                                        /ARI 582
5475  4407        JMS    I    LFPT                                        /ARI 583
5476  5323        FGET        K90                                         /ARI 584
5477  1323        FADD        K90                                         /ARI 585
5500  2320        FSUB        DEN                                         /ARI 586
5501     0        FEXT                                                    /ARI 587
5502  5211        JMP         ART2                                        /ARI 588
5503     0  FLAG, 0                                                       /ARI 589
5504     0  A,    0                  /VARIABLES                           /ARI 590
5505     0        0                                                       /ARI 591
5506     0        0                                                       /ARI 592
5507     0  B,    0                                                       /ARI 593
5510     0        0                                                       /ARI 594
5511     0        0                                                       /ARI 595
5512     0  X,    0                                                       /ARI 596
5513     0        0                                                       /ARI 597
5514     0        0                                                       /ARI 598
5515     0  XSQR, 0                                                       /ARI 599
5516     0        0                                                       /ARI 600
5517     0        0                                                       /ARI 601
5520     0  DEN,  0                                                       /ARI 602
5521     0        0                                                       /ARI 603
5522     0        0                                                       /ARI 604
5523     7  K90,  0007               /CONSTANTS                           /ARI 605
5524  2640        2640                                                    /ARI 606
5525     0        0000                                                    /ARI 607
5526     0  ALFZ, 0000                                                    /ARI 608
5527  2437        2437                                                    /ARI 609
5530  1643        1643                                                    /ARI 610
5531  7777  ALF1, 7777                                                    /ARI 611
5532  3304        3304                                                    /ARI 612
5533  4434        4434                                                    /ARI 613
5534  7773  ALF2, 7773                                                    /ARI 614
5535  3306        3306                                                    /ARI 615
5536  5454        5454                                                    /ARI 616
5537     0  BETZ, 0000                                                    /ARI 617
5540  2437        2437                                                    /ARI 618
5541  1646        1646                                                    /ARI 619
5542     0  BET1, 0000                                                    /ARI 620
5543  2427        2427                                                    /ARI 621
5544  2323        2323                                                    /ARI 622
5545  7775  BET2, 7775                                                    /ARI 623
5546  3427        3427                                                    /ARI 624
5547  7052        7052                                                    /ARI 625
                                                                          /ARI 626
            /TRUNCATE CONTENTS OF FLOATING POINT AC TO AN INTEGER         /ARI 627
5550     0  FIX,  0                  /TRUNCATE F.A. TO AN INTEGER         /ARI 628
5551  1045        TAD         45     /AND LEAVE RESULT IN AC.             /ARI 629
5552  7710        SPA    CLA                                              /ARI 630
5553  7040        CMA                                                     /ARI 631
5554  3366        DCA         FIXI   /SET INDICATOR #-1 IF NEGATIVE,      /ARI 632
5555  4372        JMS         ABS                                         /ARI 633
5556  4407        JMS    I    0007                                        /ARI 634
5557  1367        FADD        FIXC                                        /ARI 635
5560     0        FEXT                                                    /ARI 636
5561  1046        TAD         46                                          /ARI 637
```

```
5562  2366        ISZ          FIXI                                    /ARI 638
5563  5750        JMP    I     FIX                                     /ARI 639
5564  7041        CIA                                                  /ARI 640
5565  5750        JMP    I     FIX                                     /ARI 641
5566     0  FIXI, 0                                                   /ARI 642
5567    27  FIXC, 0027                                                /ARI 643
5570  2000        2000                                                 /ARI 644
5571     0        0000                                                 /ARI 645
                                                                      /ARI 646
             /REPLACE CONTENTS OF FLOATING POINT AC WITH ITS ABSOLUTE VALUE  /ARI 647
5572     0  ABS,  0                                                   /ARI 648
5573  1045        TAD          45                                      /ARI 649
5574  7710        SPA    CLA                                           /ARI 650
5575  4420        JMS    I     LNEG                                    /ARI 651
5576  5772        JMP    I     ABS                                     /ARI 652


             /FLOATING POINT ARITHMETIC INTERPRETER                   /ARI 654
                                                                      /ARI 655
             SINE#5200                                                /ARI 656
             COS#5310                                                 /ARI 657
             ABS#5572                                                 /ARI 658
             ARTN#5400                                                /ARI 659
             NEGATE#5303                                              /ARI 660
             *0007                                                    /ARI 661
   7  5600  LFPT, 5600                                                /ARI 662
             *40                                                      /ARI 663
  40     0  EXI,    0                    /OPERAND STORAGE             /ARI 664
  41     0  ACIH,   0                                                 /ARI 665
  42     0  ACIL,   0                                                 /ARI 666
  43     0  OVER1,  0                                                 /ARI 667
  44     0  EXP,    0                    /F.A.                        /ARI 668
  45     0  HORD,   0                                                 /ARI 669
  46     0  LORD,   0                                                 /ARI 670
  47     0  OVER2,  0                                                 /ARI 671
  50     0  EXP1,   0                                                 /ARI 672
  51     0  QUOL,   0                                                 /ARI 673
  52     0  FPAC1,  0                                                 /ARI 674
  53     0          0                                                 /ARI 675
  54     0          0                                                 /ARI 676
             *61                                                      /ARI 677
  61     0  FLAG,   0                    /ARITHMETIC ERROR FLAG       /ARI 678
             *5600                                                    /ARI 679
5600     0  FPNT,   0                                                 /ARI 680
5601  7300          CLA CLL                                           /ARI 681
5602  3043          DCA OVER1                                         /ARI 682
5603  3047          DCA OVER2                                         /ARI 683
5604  1600          TAD I FPNT          /GET NEXT INSTRUCTION         /ARI 684
5605  3253          DCA JUMP                                          /ARI 685
5606  1253          TAD JUMP                                          /ARI 686
5607   263          AND PAGENO          /GET PAGE BIT                 /ARI 687
5610  7650          SNA CLA             /PAGE ZERO                    /ARI 688
5611  5214          JMP .+3             /YES                          /ARI 689
5612  1261          TAD MASK5           /NO                           /ARI 690
5613   200          AND FPNT            /C(FPNT)0-4 CONTAINS PAGE BITS /ARI 691
5614  3256          DCA ADDR                                          /ARI 692
5615  1262          TAD MASK7           /GET 7 BIT ADDRESS            /ARI 693
5616   253          AND JUMP                                          /ARI 694
5617  1256          TAD ADDR                                          /ARI 695
5620  3256          DCA ADDR                                          /ARI 696
5621  1264          TAD INDRCT          /INDIRECT BIT#1               /ARI 697
5622   253          AND JUMP                                          /ARI 698
5623  7650          SNA CLA                                           /ARI 699
5624  5227          JMP LOOPD1          /NO-GO ON                     /ARI 700
5625  1656          TAD I ADDR          /YES DEFER                    /ARI 701
5626  3256          DCA ADDR                                          /ARI 702
5627  2200  LOOPD1, ISZ FPNT                                          /ARI 703
5630  1656          TAD I ADDR                                        /ARI 704
5631  3040          DCA EXI             /EXPONENT                     /ARI 705
5632  1256          TAD ADDR                                          /ARI 706
5633  3257          DCA SAVE                                          /ARI 707
5634  2257          ISZ SAVE                                          /ARI 708
5635  1657          TAD I SAVE                                        /ARI 709
5636  3041          DCA ACIH            /HIGH ORDER MANTISSA          /ARI 710
5637  2257          ISZ SAVE                                          /ARI 711
5640  1657          TAD I SAVE                                        /ARI 712
5641  3042          DCA ACIL            /LOW ORDER MANTISSA           /ARI 713
5642  1253          TAD JUMP                                          /ARI 714
5643  7106          CLL RTL                                           /ARI 715
```

```
5644  7006          RTL                                                  /ARI 716
5645   260          AND MASK3          /GET BITS 0-2, IE OPCODE          /ARI 717
5646  1265          TAD TABLE          /LOOKUP IN TABLE                  /ARI 718
5647  3254          DCA JUMP2                                            /ARI 719
5650  1654          TAD I JUMP2                                          /ARI 720
5651  3254          DCA JUMP2                                            /ARI 721
5652  5654          JMP I JUMP2        /GO THERE                         /ARI 722
5653     0  JUMP,   0                                                    /ARI 723
5654     0  JUMP2,  0                                                    /ARI 724
5655     0  GO2,    0                                                    /ARI 725
5656     0  ADDR,   0                                                    /ARI 726
5657     0  SAVE,   0                                                    /ARI 727
5660    17  MASK3,  0017                                                 /ARI 728
5661  7600  MASK5,  7600                                                 /ARI 729
5662   177  MASK7,  0177                                                 /ARI 730
5663   200  PAGENO, 0200                                                 /ARI 731
5664   400  INDRCT, 0400                                                 /ARI 732
5665  5666  TABLE,  .+1                                                  /ARI 733
5666  5742          EXIT               /TABLE USED IN INTERPRETING       /ARI 734
5667  5716          FLAD               /BITS 0-2 OF PSEUDO               /ARI 735
5670  5737          FLSU               /INSTRUCTION                      /ARI 736
5671  5761          FLMY                                                 /ARI 737
5672  6305          FLDV               /IF OPCODE#0, GO TO EXIT          /ARI 738
5673  5676          FLGT               /AND INTERPRET BITS 8-11          /ARI 739
5674  5705          FLPT                                                 /ARI 740
5675  5773          NORF                                                 /ARI 741
5676  1040  FLGT,   TAD EXI            /FGET#5                           /ARI 742
5677  3044          DCA EXP                                              /ARI 743
5700  1041          TAD ACIH                                             /ARI 744
5701  3045          DCA HORD                                             /ARI 745
5702  1042          TAD ACIL                                             /ARI 746
5703  3046          DCA LORD                                             /ARI 747
5704  5201          JMP FPNT+1                                           /ARI 748
5705  1044  FLPT,   TAD EXP            /FPUT#6                           /ARI 749
5706  3656          DCA I ADDR                                           /ARI 750
5707  2256          ISZ ADDR                                             /ARI 751
5710  1045          TAD HORD                                             /ARI 752
5711  3656          DCA I ADDR                                           /ARI 753
5712  2256          ISZ ADDR                                             /ARI 754
5713  1046          TAD LORD                                             /ARI 755
5714  3656          DCA I ADDR                                           /ARI 756
5715  5201          JMP FPNT+1                                           /ARI 757
5716  4771  FLAD,   JMS I ALGN         /FLAD#1 - FIRST ALIGN EXPONENTS   /ARI 758
5717  5201          JMP FPNT+1         /RETURN IF NO ALIGNMENT IS POSSIBLE /ARI 759
5720  4772          JMS I UNORM        /LARGER OF THE TWO IS IN F.A.     /ARI 760
5721  7100          CLL                                                  /ARI 761
5722  1043          TAD OVER1          /TRIPLE PRECISION ADDITION        /ARI 762
5723  1047          TAD OVER2          /SINCE BITS ARE SHIFTED           /ARI 763
5724  3047          DCA OVER2          /RIGHT                            /ARI 764
5725  7004          RAL                                                  /ARI 765
5726  1042          TAD ACIL                                             /ARI 766
5727  1046          TAD LORD                                             /ARI 767
5730  3046          DCA LORD                                             /ARI 768
5731  7004          RAL                                                  /ARI 769
5732  1041          TAD ACIH                                             /ARI 770
5733  1045          TAD HORD                                             /ARI 771
5734  3045          DCA HORD                                             /ARI 772
5735  4770          JMS I NORM         /NORMALIZE THE RESULT             /ARI 773
5736  5201          JMP FPNT+1                                           /ARI 774
5737  4741  FLSU,   JMS I OPMINS       /FSUB#2 - NEGATE THE OPERAND      /ARI 775
5740  5316          JMP FLAD           /ADD                              /ARI 776
5741  6400  OPMINS, MINUS2                                               /ARI 777
5742  1253  EXIT,   TAD JUMP           /OPCODE#0                         /ARI 778
5743   260          AND MASK3          /ARE BITS 8-11#0                  /ARI 779
5744  7450          SNA                                                  /ARI 780
5745  5600          JMP I FPNT         /YES#FEXT                         /ARI 781
5746  1360          TAD ACON6          /LOOKUP ON TABLE                  /ARI 782
5747  3254          DCA JUMP2                                            /ARI 783
5750  1654          TAD I JUMP2                                          /ARI 784
5751  3254          DCA JUMP2                                            /ARI 785
5752  1200          TAD FPNT                                             /ARI 786
5753  3255          DCA GO2                                              /ARI 787
5754  4654          JMS I JUMP2        /CALL AS A SUBROUTINE             /ARI 788
5755  1255          TAD GO2            /RESTORE F.P. POINTER             /ARI 789
5756  3200          DCA FPNT                                             /ARI 790
5757  5201          JMP FPNT+1         /GET NEXT PSEUDO INSTRUCTION      /ARI 791
5760  6544  ACON6,  TABLE6-1           /CALLING CAN BE TO A DEPTH ONE    /ARI 792
5761  7201  FLMY,   CLA IAC            /FMPY#3                           /ARI 793
5762  1040          TAD EXI                                              /ARI 794
5763  1044          TAD EXP            /ADD EXPONENTS TOGETHER           /ARI 795
```

```
5764  3044          DCA EXP                                          /ARI 796
5765  4767          JMS I MULT          /MULTIPLY                    /ARI 797
5766  5201          JMP FPNT+1                                       /ARI 798
5767  6221  MULT,   DMULT                                            /ARI 799
5770  6600  NORM,   DNORM                                            /ARI 800
5771  6020  ALGN,   ALIGN                                            /ARI 801
5772  6564  UNORM,  DUNORM                                           /ARI 802
5773  4770  NORF,   JMS I NORM                                       /ARI 803
5774  5201          JMP FPNT+1                                       /ARI 804
            *6000                                                    /ARI 805
6000     0  ACMINS, 0                   /ROUTINE TO PERFORM          /ARI 806
6001  7300          CLL CLA                                          /ARI 807
6002  1047          TAD OVER2           /TRIPLE PRECISION NEGATION   /ARI 808
6003  7041          CMA IAC             /OF FLOATING AC              /ARI 809
6004  3047          DCA OVER2                                        /ARI 810
6005  1046          TAD LORD                                         /ARI 811
6006  7040          CMA                                              /ARI 812
6007  7430          SZL                                              /ARI 813
6010  7101          CLL IAC                                          /ARI 814
6011  3046          DCA LORD                                         /ARI 815
6012  1045          TAD HORD                                         /ARI 816
6013  7040          CMA                                              /ARI 817
6014  7430          SZL                                              /ARI 818
6015  7101          CLL IAC                                          /ARI 819
6016  3045          DCA HORD                                         /ARI 820
6017  5600          JMP I ACMINS                                     /ARI 821
6020     0  ALIGN,  0                   /SUBROUTINE TO ALIGN         /ARI 822
6021  1045          TAD HORD            /BINARY POINTS FOR           /ARI 823
6022  7640          SZA CLA             /ADD-SUBTRACT                /ARI 824
6023  5227          JMP .+4                                          /ARI 825
6024  1046          TAD LORD            /IS MANTISSA ZERO            /ARI 826
6025  7650          SNA CLA                                          /ARI 827
6026  5337          JMP NOHERE          /YES                         /ARI 828
6027  1041          TAD ACIH            /IS OPERAND ZERO             /ARI 829
6030  7640          SZA CLA                                          /ARI 830
6031  5235          JMP .+4                                          /ARI 831
6032  1042          TAD ACIL                                         /ARI 832
6033  7650          SNA CLA                                          /ARI 833
6034  5620          JMP I ALIGN         /BOTH ARE ZERO-EXIT          /ARI 834
6035  1040          TAD EXI                                          /ARI 835
6036  7041          CMA IAC                                          /ARI 836
6037  1044          TAD EXP                                          /ARI 837
6040  7450          SNA                 /ARE EXPONENTS EQUAL         /ARI 838
6041  5314          JMP DONE            /YES                         /ARI 839
6042  7500          SMA                                              /ARI 840
6043  7041          CMA IAC                                          /ARI 841
6044  3342          DCA AMOUNT                                       /ARI 842
6045  1342          TAD AMOUNT                                       /ARI 843
6046  1343          TAD TEST2                                        /ARI 844
6047  7700          SMA CLA             /CAN EXPONENTS BE ALIGNED    /ARI 845
6050  5256          JMP .+6             /YES                         /ARI 846
6051  4316          JMS OUTGO           /NO                          /ARI 847
6052  7430          SZL                                              /ARI 848
6053  1350          TAD TAG2                                         /ARI 849
6054  1347          TAD TAG1                                         /ARI 850
6055  5325          JMP NOGO                                         /ARI 851
6056  4316          JMS OUTGO                                        /ARI 852
6057  7420          SNL                 /SET UP ADDRESSES            /ARI 853
6060  1350          TAD TAG2                                         /ARI 854
6061  1347          TAD TAG1                                         /ARI 855
6062  3344          DCA TEST3                                        /ARI 856
6063  1342          TAD AMOUNT                                       /ARI 857
6064  7041          CMA IAC                                          /ARI 858
6065  1744          TAD I TEST3                                      /ARI 859
6066  3744          DCA I TEST3                                      /ARI 860
6067  2344          ISZ TEST3                                        /ARI 861
6070  1344          TAD TEST3                                        /ARI 862
6071  3345          DCA TEST4                                        /ARI 863
6072  2345          ISZ TEST4                                        /ARI 864
6073  1345          TAD TEST4                                        /ARI 865
6074  3346          DCA TEST5                                        /ARI 866
6075  2346          ISZ TEST5                                        /ARI 867
6076  7100  SHIFT,  CLL                 /THIS ROUTINE DOES           /ARI 868
6077  1744          TAD I TEST3         /THE ACUTAL SHIFTING         /ARI 869
6100  7510          SPA                                              /ARI 870
6101  7020          CML                                              /ARI 871
6102  7010          RAR                                              /ARI 872
6103  3744          DCA I TEST3                                      /ARI 873
6104  1745          TAD I TEST4                                      /ARI 874
6105  7010          RAR                                              /ARI 875
6106  3745          DCA I TEST4                                      /ARI 876
```

```
6107  1746          TAD I TEST5                                          /ARI 877
6110  7010          RAR                                                  /ARI 878
6111  3746          DCA I TEST5                                          /ARI 879
6112  2342          ISZ AMOUNT                                           /ARI 880
6113  5276          JMP SHIFT                                            /ARI 881
6114  2220  DONE,   ISZ ALIGN                                            /ARI 882
6115  5620          JMP I ALIGN                                          /ARI 883
6116     0  OUTGO,  0                    /DETERMINE WHICH TO SHIFT       /ARI 884
6117  1040          TAD EX1                                              /ARI 885
6120  7041          CMA IAC                                              /ARI 886
6121  1044          TAD EXP                                              /ARI 887
6122  7004          RAL                                                  /ARI 888
6123  7200          CLA                                                  /ARI 889
6124  5716          JMP I OUTGO                                          /ARI 890
6125  3344  NOGO,   DCA TEST3           /CANT BE ALIGNED                /ARI 891
6126  1744          TAD I TEST3         /LARGEST GOES INTO FAC          /ARI 892
6127  3044          DCA EXP                                              /ARI 893
6130  2344          ISZ TEST3                                            /ARI 894
6131  1744          TAD I TEST3                                          /ARI 895
6132  3045          DCA HORD                                             /ARI 896
6133  2344          ISZ TEST3                                            /ARI 897
6134  1744          TAD I TEST3                                          /ARI 898
6135  3046          DCA LORD                                             /ARI 899
6136  5620          JMP I ALIGN                                          /ARI 900
6137  1040  NOHERE, TAD EX1             /MANTISSA#0                     /ARI 901
6140  3044          DCA EXP                                              /ARI 902
6141  5314          JMP DONE                                             /ARI 903
6142     0  AMOUNT, 0                                                   /ARI 904
6143    30  TEST2,  0030                                                /ARI 905
6144     0  TEST3,  0                                                   /ARI 906
6145     0  TEST4,  0                                                   /ARI 907
6146     0  TEST5,  0                                                   /ARI 908
6147    44  TAG1,   EXP                                                 /ARI 909
6150  7774  TAG2,   EX1-EXP                                             /ARI 910
6151  5601  RETN2,  FPNT+1                                              /ARI 911
6152  1362  ERROR1, TAD GOOF            /DIVISION BY ZERO               /ARI 912
6153  3044          DCA EXP             /SET TO LARGEST + VALUE         /ARI 913
6154  1362          TAD GOOF                                             /ARI 914
6155  3045          DCA HORD                                             /ARI 915
6156  7040          CMA                                                  /ARI 916
6157  3046          DCA LORD                                             /ARI 917
6160  2061          ISZ FLAG            /SET FLAG                       /ARI 918
6161  5751          JMP I RETN2                                          /ARI 919
6162  3777  GOOF,   3777                                                 /ARI 920
6163     0  SQUARE, 0                                                   /ARI 921
6164  4407          JMS I LFPT                                           /ARI 922
6165  6052          FPUT FPAC1                                           /ARI 923
6166  3052          FMPY FPAC1                                           /ARI 924
6167     0          FEXT                                                 /ARI 925
6170  5763          JMP I SQUARE                                         /ARI 926
6171     0  EXIT6,  0                    /DUMMY SUBROUTINE               /ARI 927
6172  5771          JMP I EXIT6                                          /ARI 928
            *6200                                                       /ARI 929
6200     0  DIV1,   0                    /SHIFT FAC RIGHT                /ARI 930
6201  7300          CLA CLL                                              /ARI 931
6202  1045          TAD HORD                                             /ARI 932
6203  7510          SPA                                                  /ARI 933
6204  7120          CLL CML                                              /ARI 934
6205  7010          RAR                                                  /ARI 935
6206  3045          DCA HORD                                             /ARI 936
6207  1046          TAD LORD                                             /ARI 937
6210  7010          RAR                                                  /ARI 938
6211  3046          DCA LORD                                             /ARI 939
6212  1047          TAD OVER2                                            /ARI 940
6213  7010          RAR                                                  /ARI 941
6214  3047          DCA OVER2                                            /ARI 942
6215  7100          CLL                                                  /ARI 943
6216  2044          ISZ EXP                                              /ARI 944
6217  7000          NOP                                                  /ARI 945
6220  5600          JMP I DIV1                                           /ARI 946
6221     0  DMULT,  0                    /DOUBLE PRECISION MULTIPLY      /ARI 947
6222  7300          CLA CLL             /SAVE PRODUCT TRIPLE PRECISION  /ARI 948
6223  1363          TAD SMACLA                                           /ARI 949
6224  3347          DCA SNSWIT          /CALLS A SINGLE PRECISION       /ARI 950
6225  4336          JMS SIGN            /MULTIPLY 3 TIMES               /ARI 951
6226  1042          TAD ACIL                                             /ARI 952
6227  3756          DCA I MP2PT                                          /ARI 953
6230  1046          TAD LORD                                             /ARI 954
6231  4755          JMS I MP4PT                                          /ARI 955
6232  7200          CLA                                                  /ARI 956
6233  1757          TAD I MP5PT                                          /ARI 957
```

```
6234  3047          DCA OVER2                                          /ARI 958
6235  1045          TAD HORD                                           /ARI 959
6236  3756          DCA I MP2PT                                        /ARI 960
6237  1042          TAD ACIL                                           /ARI 961
6240  4755          JMS I MP4PT                                        /ARI 962
6241  1047          TAD OVER2                                          /ARI 963
6242  3047          DCA OVER2                                          /ARI 964
6243  7004          RAL                                                /ARI 965
6244  1757          TAD I MP5PT                                        /ARI 966
6245  3367          DCA D                                              /ARI 967
6246  7004          RAL                                                /ARI 968
6247  3370          DCA KEEP                                           /ARI 969
6250  1041          TAD ACIH                                           /ARI 970
6251  3756          DCA I MP2PT                                        /ARI 971
6252  1046          TAD LORD                                           /ARI 972
6253  4755          JMS I MP4PT                                        /ARI 973
6254  1047          TAD OVER2                                          /ARI 974
6255  3047          DCA OVER2                                          /ARI 975
6256  7004          RAL                                                /ARI 976
6257  1757          TAD I MP5PT                                        /ARI 977
6260  1367          TAD D                                              /ARI 978
6261  3367          DCA D                                              /ARI 979
6262  7004          RAL                                                /ARI 980
6263  1370          TAD KEEP                                           /ARI 981
6264  3370          DCA KEEP                                           /ARI 982
6265  1045          TAD HORD                                           /ARI 983
6266  3756          DCA I MP2PT                                        /ARI 984
6267  1041          TAD ACIH                                           /ARI 985
6270  4755          JMS I MP4PT                                        /ARI 986
6271  1367          TAD D                                              /ARI 987
6272  3046          DCA LORD                                           /ARI 988
6273  7004          RAL                                                /ARI 989
6274  1757          TAD I MP5PT                                        /ARI 990
6275  1370          TAD KEEP                                           /ARI 991
6276  3045          DCA HORD                                           /ARI 992
6277  4760          JMS I NORMF                                        /ARI 993
6300  3047          DCA OVER2                                          /ARI 994
6301  2365          ISZ SGN                                            /ARI 995
6302  5621          JMP I DMULT                                        /ARI 996
6303  4773          JMS I MINS                                         /ARI 997
6304  5621          JMP I DMULT                                        /ARI 998
6305  1041  FLDV,   TAD ACIH                                           /ARI 999
6306  7640          SZA CLA                                            /ARI1000
6307  5313          JMP .+4                                            /ARI1001
6310  1042          TAD ACIL                                           /ARI1002
6311  7650          SNA CLA                                            /ARI1003
6312  5774          JMP I ERROR          /DIVISION BY ZERO             /ARI1004
6313  1040          TAD EXI                                            /ARI1005
6314  7041          CMA IAC                                            /ARI1006
6315  1044          TAD EXP                                            /ARI1007
6316  7001          IAC                                                /ARI1008
6317  3044          DCA EXP              /SUBTRACT EXPONENTS           /ARI1009
6320  1362          TAD SPACLA                                         /ARI1010
6321  3347          DCA SNSWIT                                         /ARI1011
6322  4336          JMS SIGN             /SET UP SIGNS                 /ARI1012
6323  4761          JMS I DIVIDE         /DIVIDE                       /ARI1013
6324  1757          TAD I MP5PT                                        /ARI1014
6325  1041          TAD ACIH             /ROUND OFF IN 23RD BIT        /ARI1015
6326  7630          SZL CLA                                            /ARI1016
6327  7001          IAC                                                /ARI1017
6330  3042          DCA ACIL                                           /ARI1018
6331  3041          DCA ACIH                                           /ARI1019
6332  2365          ISZ SGN              /TEST SIGN                    /ARI1020
6333  4773          JMS I MINS           /NEGATE                       /ARI1021
6334  5735          JMP I .+1            /ADD ROUNDING                 /ARI1022
6335  5720          FLAD+2                                             /ARI1023
6336     0  SIGN,   0                    /TEST SIGN OF RESULT          /ARI1024
6337  1366          TAD REST             /SET UP BY MULTIPLY AND       /ARI1025
6340  3365          DCA SGN              /DIVIDE                       /ARI1026
6341  1045          TAD HORD                                           /ARI1027
6342  7700          SMA CLA                                            /ARI1028
6343  5346          JMP .+3                                            /ARI1029
6344  4773          JMS I MINS                                         /ARI1030
6345  2365          ISZ SGN                                            /ARI1031
6346  1041          TAD ACIH                                           /ARI1032
6347  7700  SNSWIT, SMA CLA              /OR SPA CLA                   /ARI1033
6350  5736          JMP I SIGN                                         /ARI1034
6351  4771          JMS I MINS2                                        /ARI1035
6352  2365          ISZ SGN                                            /ARI1036
6353  7000          NOP                                                /ARI1037
6354  5736          JMP I SIGN                                         /ARI1038
```

```
6355  6437  MP4PT,   MP4                                          /ARI1039
6356  6471  MP2PT,   MP2                                          /ARI1040
6357  6465  MP5PT,   MP5                                          /ARI1041
6360  6600  NORMF,   DNORM                                        /ARI1042
6361  6472  DIVIDE,  DUBDIV                                       /ARI1043
6362  7710  SPACLA,  SPA CLA                                      /ARI1044
6363  7700  SMACLA,  SMA CLA                                      /ARI1045
6364  5601  RETURN,  FPNT+1                                       /ARI1046
6365     0  SGN,     0                                            /ARI1047
6366  7776  REST,    7776                                         /ARI1048
6367     0  D,       0                                            /ARI1049
6370     0  KEEP,    0                                            /ARI1050
6371  6400  MINS2,   MINUS2              /-ACIH,ACIL              /ARI1051
6372  6420  RAR2,    DIV2                /ACIH,ACIL/2             /ARI1052
6373  6000  MINS,    ACMINS                                       /ARI1053
6374  6152  ERROR,   ERROR1                                       /ARI1054
            *6400                                                 /ARI1055
6400     0  MINUS2,  0                   /NEGATE OPERAND          /ARI1056
6401  7300           CLA CLL             /TRIPLE PRECISION        /ARI1057
6402  1043           TAD OVER1                                    /ARI1058
6403  7041           CMA IAC                                      /ARI1059
6404  3043           DCA OVER1                                    /ARI1060
6405  1042           TAD AC1L                                     /ARI1061
6406  7040           CMA                                          /ARI1062
6407  7430           SZL                                          /ARI1063
6410  7101           CLL IAC                                      /ARI1064
6411  3042           DCA AC1L                                     /ARI1065
6412  1041           TAD AC1H                                     /ARI1066
6413  7040           CMA                                          /ARI1067
6414  7430           SZL                                          /ARI1068
6415  7101           CLL IAC                                      /ARI1069
6416  3041           DCA AC1H                                     /ARI1070
6417  5600           JMP I MINUS2                                 /ARI1071
6420     0  DIV2,    0                   /SHIFT OPERAND RIGHT     /ARI1072
6421  7300           CLA CLL             /TRIPLE PRECISION        /ARI1073
6422  1041           TAD AC1H                                     /ARI1074
6423  7510           SPA                                          /ARI1075
6424  7120           CLL CML                                      /ARI1076
6425  7010           RAR                                          /ARI1077
6426  3041           DCA AC1H                                     /ARI1078
6427  1042           TAD AC1L                                     /ARI1079
6430  7010           RAR                                          /ARI1080
6431  3042           DCA AC1L                                     /ARI1081
6432  1043           TAD OVER1                                    /ARI1082
6433  7010           RAR                                          /ARI1083
6434  3043           DCA OVER1                                    /ARI1084
6435  7100           CLL                                          /ARI1085
6436  5620           JMP I DIV2                                   /ARI1086
6437     0  MP4,     0                   /SINGLE PRECISION MULTIPLY /ARI1087
6440  3266           DCA MP1             /12 BITS BY 12 BITS      /ARI1088
6441  3265           DCA MP5                                      /ARI1089
6442  1270           TAD THIR                                     /ARI1090
6443  3267           DCA MP3                                      /ARI1091
6444  7100           CLL                                          /ARI1092
6445  1266           TAD MP1                                      /ARI1093
6446  7010           RAR                                          /ARI1094
6447  3266           DCA MP1                                      /ARI1095
6450  1265           TAD MP5                                      /ARI1096
6451  7420           SNL                                          /ARI1097
6452  5255           JMP .+3                                      /ARI1098
6453  7100           CLL                                          /ARI1099
6454  1271           TAD MP2                                      /ARI1100
6455  7010           RAR                                          /ARI1101
6456  3265           DCA MP5                                      /ARI1102
6457  2267           ISZ MP3                                      /ARI1103
6460  5245           JMP MP4+6                                    /ARI1104
6461  1266           TAD MP1                                      /ARI1105
6462  7010           RAR                                          /ARI1106
6463  7100           CLL                                          /ARI1107
6464  5637           JMP I MP4                                    /ARI1108
6465     0  MP5,     0                                            /ARI1109
6466     0  MP1,     0                                            /ARI1110
6467     0  MP3,     0                                            /ARI1111
6470  7764  THIR,    7764                                         /ARI1112
6471     0  MP2,     0                                            /ARI1113
6472     0  DUBDIV,  0                   /DOUBLE PRECISION DIVIDE /ARI1114
6473  7300           CLA CLL                                      /ARI1115
6474  3051           DCA QUOL                                     /ARI1116
6475  1344           TAD MIF                                      /ARI1117
6476  3267           DCA MP3                                      /ARI1118
6477  5306           JMP DVX                                      /ARI1119
```

```
6500  1046  DV3,     TAD LORD                                                  /ARI1120
6501  7004           RAL                                                       /ARI1121
6502  3046           DCA LORD                                                  /ARI1122
6503  1045           TAD HORD                                                  /ARI1123
6504  7004           RAL                                                       /ARI1124
6505  3045           DCA HORD                                                  /ARI1125
6506  1042  DVX,     TAD ACIL                                                  /ARI1126
6507  1046           TAD LORD                                                  /ARI1127
6510  3271           DCA MP2                                                   /ARI1128
6511  7004           RAL                                                       /ARI1129
6512  1045           TAD HORD                                                  /ARI1130
6513  1041           TAD ACIH                                                  /ARI1131
6514  7420           SNL                                                       /ARI1132
6515  5321           JMP DV2-1                                                 /ARI1133
6516  3045           DCA HORD                                                  /ARI1134
6517  1271           TAD MP2                                                   /ARI1135
6520  3046           DCA LORD                                                  /ARI1136
6521  7200           CLA                                                       /ARI1137
6522  1051  DV2,     TAD QUOL                                                  /ARI1138
6523  7004           RAL                                                       /ARI1139
6524  3051           DCA QUOL                                                  /ARI1140
6525  1047           TAD OVER2                                                 /ARI1141
6526  7004           RAL                                                       /ARI1142
6527  3047           DCA OVER2                                                 /ARI1143
6530  2267           ISZ MP3                                                   /ARI1144
6531  5300           JMP DV3                                                   /ARI1145
6532  1051           TAD QUOL                                                  /ARI1146
6533  3046           DCA LORD                                                  /ARI1147
6534  1045           TAD HORD                                                  /ARI1148
6535  7106           CLL RTL                                                   /ARI1149
6536  3265           DCA MP5                                                   /ARI1150
6537  1047           TAD OVER2                                                 /ARI1151
6540  3045           DCA HORD                                                  /ARI1152
6541  3047           DCA OVER2                                                 /ARI1153
6542  1265           TAD MP5                                                   /ARI1154
6543  5672           JMP I DUBDIV                                              /ARI1155
6544  7751  MIF,     7751                                                      /ARI1156
6545  6163  TABLE6,  SQUARE              /TABLE FOR INTERPRETATION             /ARI1157
6546  6656           SQROOT              /OF BITS 8-11                         /ARI1158
6547  5200           SINE                /CONTAINS ABSOLUTE ADDRESSES          /ARI1159
6550  5310           COS                 /OF PROGRAMS CALLED AS                /ARI1160
6551  5400           ARTN                /SUBROUTINES                          /ARI1161
6552  5303           NEGATE              /EXIT6#A DUMMY OR NOP                 /ARI1162
6553  5572           ABS                                                       /ARI1163
6554  6171           EXIT6                                                     /ARI1164
6555  6171           EXIT6                                                     /ARI1165
6556  6171           EXIT6                                                     /ARI1166
6557  6171           EXIT6                                                     /ARI1167
6560  6171           EXIT6                                                     /ARI1168
6561  6171           EXIT6                                                     /ARI1169
6562  6171           EXIT6                                                     /ARI1170
6563  6171           EXIT6                                                     /ARI1171
6564     0  DUNORM,  0                                                         /ARI1172
6565  4220           JMS DIV2            /SHIFT OPERAND RIGHT                  /ARI1173
6566  4772           JMS I RARI                                                /ARI1174
6567  2040           ISZ EXI                                                   /ARI1175
6570  7000           NOP                                                       /ARI1176
6571  5764           JMP I DUNORM                                              /ARI1177
6572  6200  RARI,    DIVI                                                      /ARI1178
            *6600                                                              /ARI1179
6600     0  DNORM,   0                   /SUBROUTINE TO NORMALIZE              /ARI1180
6601  7300           CLA CLL             /FLOATING ACCUMULATOR                 /ARI1181
6602  3255           DCA AMTI                                                  /ARI1182
6603  3254           DCA SIGNI                                                 /ARI1183
6604  1045           TAD HORD                                                  /ARI1184
6605  7510           SPA                 /IS MANTISSA NEGATIVE                 /ARI1185
6606  2254           ISZ SIGNI           /YES                                  /ARI1186
6607  7640           SZA CLA             /IS MANTISSA#0                        /ARI1187
6610  5217           JMP GO6             /NO                                   /ARI1188
6611  1046           TAD LORD                                                  /ARI1189
6612  7640           SZA CLA                                                   /ARI1190
6613  5217           JMP GO6                                                   /ARI1191
6614  1047           TAD OVER2                                                 /ARI1192
6615  7650           SNA CLA                                                   /ARI1193
6616  5251           JMP EXIT2           /YES                                  /ARI1194
6617  1254  GO6,     TAD SIGNI           /NO                                   /ARI1195
6620  7640           SZA CLA             /NEGATIVE                             /ARI1196
6621  4653           JMS I NEG           /YES                                  /ARI1197
6622  1045  LOP,     TAD HORD            /WILL SHIFT BE TOO FAR                /ARI1198
6623  7104           RAL CLL                                                   /ARI1199
6624  7710           SPA CLA                                                   /ARI1200
```

```
6625  5241          JMP EXITI          /YES                                  /ARI1201
6626  1047          TAD OVER2                                                /ARI1202
6627  7104          CLL RAL                                                  /ARI1203
6630  3047          DCA OVER2                                                /ARI1204
6631  1046          TAD LORD           /NO SHIFT MANTISSA LEFT               /ARI1205
6632  7004          RAL                                                      /ARI1206
6633  3046          DCA LORD                                                 /ARI1207
6634  1045          TAD HORD                                                 /ARI1208
6635  7004          RAL                                                      /ARI1209
6636  3045          DCA HORD                                                 /ARI1210
6637  2255          ISZ AMTI           /COUNT NO. OF TIMES SHIFTED           /ARI1211
6640  5222          JMP LOP                                                  /ARI1212
6641  1255  EXITI,  TAD AMTI           /CORRECT EXPONENT                     /ARI1213
6642  7041          CMA IAC                                                  /ARI1214
6643  1044          TAD EXP                                                  /ARI1215
6644  3044          DCA EXP                                                  /ARI1216
6645  1254          TAD SIGNI          /NEGATIVE                             /ARI1217
6646  7640          SZA CLA                                                  /ARI1218
6647  4653          JMS I NEG          /YES                                  /ARI1219
6650  5600          JMP I DNORM                                              /ARI1220
6651  3044  EXIT2,  DCA EXP            /SET TO ZERO                          /ARI1221
6652  5600          JMP I DNORM                                              /ARI1222
6653  6000  NEG,    ACMINS                                                   /ARI1223
6654     0  SIGNI,  0                                                        /ARI1224
6655     0  AMTI,   0                                                        /ARI1225
6656     0  SQROOT, 0                  /FLOATING SQUARE ROOT                 /ARI1226
6657  3362          DCA FLAGI          /TAKES ROOT OF ABSOLUTE               /ARI1227
6660  4407          JMS I LFPT                                               /ARI1228
6661  6052          FPUT FPACI         /VALUE                                /ARI1229
6662     0          FEXT               /NEWTONS METHOD IS USED               /ARI1230
6663  1045          TAD HORD                                                 /ARI1231
6664  7710          SPA CLA                                                  /ARI1232
6665  5351          JMP SQENDI         /NUMBER IS NEGATIVE                   /ARI1233
6666  1044          TAD EXP                                                  /ARI1234
6667  7100          CLL                                                      /ARI1235
6670  7510          SPA                                                      /ARI1236
6671  7020          CML                                                      /ARI1237
6672  7010          RAR                                                      /ARI1238
6673  3356          DCA ITERI          /MAKE FIRST APPROXIMATION             /ARI1239
6674  7430          SZL                                                      /ARI1240
6675  2356          ISZ ITERI                                                /ARI1241
6676  7000          NOP                                                      /ARI1242
6677  1361          TAD SQCONI                                               /ARI1243
6700  3357          DCA ITERI+1                                              /ARI1244
6701  3360          DCA ITERI+2                                              /ARI1245
6702  1053          TAD FPACI+1                                              /ARI1246
6703  7640          SZA CLA                                                  /ARI1247
6704  5310          JMP CLCU                                                 /ARI1248
6705  1054          TAD FPACI+2                                              /ARI1249
6706  7650          SNA CLA                                                  /ARI1250
6707  5354          JMP SQEND          /NUMBER#0                             /ARI1251
6710  4407  CLCU,   JMS I LFPT                                               /ARI1252
6711  5052          FGET FPACI                                               /ARI1253
6712  4356          FDIV ITERI                                               /ARI1254
6713  1356          FADD ITERI                                               /ARI1255
6714     0          FEXT                                                     /ARI1256
6715  7240          CLA CMA                                                  /ARI1257
6716  1044          TAD EXP                                                  /ARI1258
6717  3044          DCA EXP                                                  /ARI1259
6720  1044          TAD EXP                                                  /ARI1260
6721  7041          CMA IAC                                                  /ARI1261
6722  1356          TAD ITERI                                                /ARI1262
6723  7640          SZA CLA            /ARE EXPONENTS EQUAL                  /ARI1263
6724  5345          JMP ROOTGO         /NO                                   /ARI1264
6725  1045          TAD HORD           /ARE HIGH-ORDER MANTISSAS EQUAL       /ARI1265
6726  7041          CMA IAC                                                  /ARI1266
6727  1357          TAD ITERI+1                                              /ARI1267
6730  7640          SZA CLA                                                  /ARI1268
6731  5345          JMP ROOTGO         /NO                                   /ARI1269
6732  1046          TAD LORD                                                 /ARI1270
6733  7041          CMA IAC                                                  /ARI1271
6734  1360          TAD ITERI+2        /DO LOW-ORDER MANTISSAS AGREE         /ARI1272
6735  7500          SMA                                                      /ARI1273
6736  7041          CMA IAC            /WITHIN ONE BIT                       /ARI1274
6737  7001          IAC                                                      /ARI1275
6740  7710          SPA CLA                                                  /ARI1276
6741  5345          JMP ROOTGO         /NO                                   /ARI1277
6742  1362          TAD FLAGI                                                /ARI1278
6743  3061          DCA FLAG                                                 /ARI1279
6744  5656          JMP I SQROOT                                             /ARI1280
6745  4407  ROOTGO, JMS I LFPT                                               /ARI1281
```

```
6746  6356          FPUT ITER1                                          /ARI1282
6747     0          FEXT                                                /ARI1283
6750  5310          JMP CLCU                                            /ARI1284
6751  4653  SQEND1, JMS I NEG            /NEGATE FAC                    /ARI1285
6752  2362          ISZ FLAG1                                           /ARI1286
6753  5260          JMP SQROOT+2                                        /ARI1287
6754  3044  SQEND,  DCA EXP                                            /ARI1288
6755  5656          JMP I SQROOT                                        /ARI1289
6756    ~0  ITER1,  0                                                   /ARI1290
6757     0          0                                                   /ARI1291
6760     0          0                                                   /ARI1292
6761  3015  SQCON1, 3015                                                /ARI1293
6762     0  FLAG1,  0                                                   /ARI1294


            /OUTPUT CARRIAGE RETURN AND LINE FEED                       /ARI1296
            *6766                                                       /ARI1297
            LOPCH#70                                                    /ARI1298
6766     0  CRLF,   0                                                   /ARI1299
6767  1374          TAD CR                                              /ARI1300
6770  4470          JMS I LOPCH                                         /ARI1301
6771  1375          TAD LF                                              /ARI1302
6772  4470          JMS I LOPCH                                         /ARI1303
6773  5766          JMP I CRLF                                          /ARI1304
6774   215  CR,     215                                                 /ARI1305
6775   212  LF,     212                                                 /ARI1306


            /INPUT/OUTPUT ROUTINES                                      /ARI1308
            FPNT#7                                                      /ARI1309
            EXI#40                                                      /ARI1310
            LIPCH#67                                                    /ARI1311
            LOPCH#70                                                    /ARI1312
            ALIG#6020                                                   /ARI1313
            *44                                                         /ARI1314
   44     0  EXPONT, 0                   /FLOATING POINT AC             /ARI1315
   45     0  HORDER, 0                                                  /ARI1316
   46     0  LORDER, 0                                                  /ARI1317
            *55                                                         /ARI1318
   55     0  HI,     0                   /DOUBLE PRECISION NUMBER       /ARI1319
   56     0  LO,     0                                                  /ARI1320
   57     0  CHAR,   SCK, TEMP, 0        /GENERAL I/O TEMPORARY         /ARI1321
   60     0  SIGN,   0                   /INDICATOR FOR INPUT  CHARACTER FOR OUTPUT /ARI1322
                                                                        /ARI1323
            *7000                                                       /ARI1324
            /SINGLE-PRECISION INTEGER INPUT                             /ARI1325
7000     0  INTIN,  0                                                   /ARI1326
7001  4207          JMS DECONV           /READ AND CONVERT              /ARI1327
7002  1060          TAD SIGN             /TEST SIGN                     /ARI1328
7003  7640          SZA CLA                                             /ARI1329
7004  4351          JMS MSIGN                                           /ARI1330
7005  1056          TAD LO               /RESULT IN AC                  /ARI1331
7006  5600          JMP I INTIN          /RETURN                        /ARI1332
                                                                        /ARI1333
            /DOUBLE PRECISION DECIMAL-BINARY                            /ARI1334
            /INPUT AND CONVERSION                                       /ARI1335
7007     0  DECONV, 0                                                   /ARI1336
7010  3055          DCA HI               /INITIALIZE                    /ARI1337
7011  3056          DCA LO                                              /ARI1338
7012  3060          DCA SIGN                                            /ARI1339
7013  3304          DCA DNUMBR                                          /ARI1340
7014  3675          DCA I LPRSW                                         /ARI1341
7015  3305          DCA IND                                             /ARI1342
7016  7410          SKP                                                 /ARI1343
7017  2305  DECON,  ISZ IND              /INDICATES SIGN,DIGIT,OR PERIOD HAS BEEN RE/ARI1344
7020  4467  STRT,   JMS I LIPCH          /INPUT A CHARACTER             /ARI1345
7021  3057          DCA CHAR                                            /ARI1346
7022  1057          TAD CHAR             /PUT IT OUT                    /ARI1347
7023  4470          JMS I LOPCH                                         /ARI1348
7024  1057          TAD CHAR             /TEST FOR RUBOUT               /ARI1349
7025  1272          TAD MRBOUT                                          /ARI1350
7026  7450          SNA                                                 /ARI1351
7027  5210          JMP DECONV+1         /RUBOUT  START AGAIN           /ARI1352
7030  1273          TAD MINCR            /TEST FOR CR                   /ARI1353
7031  7640          SZA CLA                                             /ARI1354
7032  5235          JMP DGTST                                           /ARI1355
7033  1274          TAD LFED             /CR   PUT OUT LF               /ARI1356
7034  4470          JMS I LOPCH                                         /ARI1357
```

```
7035  1057  DGTST,  TAD CHAR          /IS IT A DIGIT                    /ARI1358
7036  1277          TAD MIN9                                            /ARI1359
7037  7500          SMA                                                 /ARI1360
7040  5254          JMP TEST          /NO                               /ARI1361
7041  1300          TAD MZERO                                           /ARI1362
7042  7510          SPA                                                 /ARI1363
7043  5254          JMP TEST          /NO                               /ARI1364
7044  3303          DCA DIGIT         /YES                              /ARI1365
7045  1055          TAD HI                                              /ARI1366
7046   302          AND MASK          /OVERFLOW                         /ARI1367
7047  7640          SZA CLA                                             /ARI1368
7050  5217          JMP DECON         /YES-IGNORE                       /ARI1369
7051  2304          ISZ DNUMBR        /INDEX NUMBER OF DIGITS           /ARI1370
7052  4306          JMS MULTIO                                          /ARI1371
7053  5217          JMP DECON         /CONTINUE                         /ARI1372
7054  7200  TEST,   CLA                                                 /ARI1373
7055  1057          TAD CHAR                                            /ARI1374
7056  1301          TAD DEC           /IS IT A DECIMAL POINT            /ARI1375
7057  7650          SNA CLA                                             /ARI1376
7060  5607          JMP I DECONV      /YES. RETURN                      /ARI1377
7061  1305          TAD IND           /HAS DIGIT,SIGN, OR DECIMAL POINT /ARI1378
7062  7640          SZA CLA           /BEEN READ                        /ARI1379
7063  5607          JMP I DECONV      /YES. RETURN                      /ARI1380
7064  1057          TAD CHAR          /NO  TEST FOR MINUS SIGN          /ARI1381
7065  1276          TAD MINUS                                           /ARI1382
7066  7640          SZA CLA                                             /ARI1383
7067  5220          JMP STRT          /NOT MINUS  IGNORE                /ARI1384
7070  2060          ISZ SIGN          /MINUS  SET INDICATOR             /ARI1385
7071  5217          JMP DECON                                           /ARI1386
7072  7401  MRBOUT, -377                                                /ARI1387
7073   162  MINCR,  377-215                                            /ARI1388
7074   212  LFED,   0212                                               /ARI1389
7075  7457  LPRSW,  PRSW                                               /ARI1390
7076  7523  MINUS,  -255              /TEST FOR SIGN                    /ARI1391
7077  7506  MIN9,   -272              /TEST FOR DIGIT                   /ARI1392
7100    12  MZERO,  272-260                                            /ARI1393
7101  7522  DEC,    -256                                               /ARI1394
7102  7600  MASK,   7600              /TEST FOR OVERFLOW                /ARI1395
7103     0  DIGIT,  0                 /STORAGE FOR DIGIT                /ARI1396
7104     0  DNUMBR, 0                 /NUMBER OF DIGITS                 /ARI1397
7105     0  IND,    0                                                  /ARI1398
                                                                       /ARI1399
7106     0  MULTIO, 0                 /ROUTINE TO MULTIPLY              /ARI1400
7107  1056          TAD LO            /DOUBLE PRECISION WORD            /ARI1401
7110  3325          DCA LTEMP         /BY TEN (DECIMAL)                 /ARI1402
7111  1055          TAD HI                                              /ARI1403
7112  3324          DCA HTEMP                                           /ARI1404
7113  4326          JMS MULT2         /CALL SUBROUTINE TO               /ARI1405
7114  4326          JMS MULT2         /MULTIPLY BY TWO                  /ARI1406
7115  4337          JMS DUBLAD        /CALL DOUBLE PRECISION ADD        /ARI1407
7116  4326          JMS MULT2                                           /ARI1408
7117  1303          TAD DIGIT         /ADD LAST DIGIT RECEIVED          /ARI1409
7120  3325          DCA LTEMP                                           /ARI1410
7121  3324          DCA HTEMP                                           /ARI1411
7122  4337          JMS DUBLAD                                          /ARI1412
7123  5706          JMP I MULTIO                                        /ARI1413
7124     0  HTEMP,  0                 /DOUBLE PRECISION WORD            /ARI1414
7125     0  LTEMP,  0                                                  /ARI1415
                                                                       /ARI1416
7126     0  MULT2,  0                 /MULTIPLY LO, HI BY 2             /ARI1417
7127  7300          CLA CLL                                             /ARI1418
7130  1056          TAD LO                                              /ARI1419
7131  7004          RAL                                                 /ARI1420
7132  3056          DCA LO                                              /ARI1421
7133  1055          TAD HI                                              /ARI1422
7134  7004          RAL                                                 /ARI1423
7135  3055          DCA HI                                              /ARI1424
7136  5726          JMP I MULT2                                         /ARI1425
                                                                       /ARI1426
7137     0  DUBLAD, 0                 /DOUBLE PRECISION ADDITION        /ARI1427
7140  7300          CLA CLL                                             /ARI1428
7141  1056          TAD LO                                              /ARI1429
7142  1325          TAD LTEMP                                           /ARI1430
7143  3056          DCA LO                                              /ARI1431
7144  7004          RAL                                                 /ARI1432
7145  1055          TAD HI                                              /ARI1433
7146  1324          TAD HTEMP                                           /ARI1434
7147  3055          DCA HI                                              /ARI1435
7150  5737          JMP I DUBLAD                                        /ARI1436
                                                                       /ARI1437
```

```
7151     0  MSIGN,  0                      /ROUTINE TO FORM                  /ARI1438
7152  7300          CLA CLL                /2S COMPLEMENT                    /ARI1439
7153  1056          TAD LO                                                   /ARI1440
7154  7041          CMA IAC                                                  /ARI1441
7155  3056          DCA LO                                                   /ARI1442
7156  1055          TAD HI                                                   /ARI1443
7157  7040          CMA                                                      /ARI1444
7160  7430          SZL                                                      /ARI1445
7161  7001          IAC                                                      /ARI1446
7162  3055          DCA HI                                                   /ARI1447
7163  5751          JMP I MSIGN                                              /ARI1448
                                                                             /ARI1449
            /SET SIGN CHARACTER FOR OUTPUT                                   /ARI1450
7164     0  STSG,   0                                                       /ARI1451
7165  7710          SPA CLA                                                  /ARI1452
7166  1372          TAD MCH                /NEGATIVE                         /ARI1453
7167  1373          TAD SPCH               /POSITIVE                         /ARI1454
7170  3060          DCA SIGN                                                 /ARI1455
7171  5764          JMP I STSG             /RETURN                           /ARI1456
7172    15  MCH,    255-240                /MINUS-SPACE                      /ARI1457
7173   240  SPCH,   240                    /SPACE                            /ARI1458
                                                                             /ARI1459
            *7200                                                            /ARI1460
            /VARIABLE-FORMAT FLOATING OUTPUT                                 /ARI1461
7200     0  VFOUT,  0                                                       /ARI1462
7201  1600          TAD I VFOUT            /MOVE ARGUMENTS                   /ARI1463
7202  3247          DCA A                                                    /ARI1464
7203  2200          ISZ VFOUT                                                /ARI1465
7204  1600          TAD I VFOUT                                              /ARI1466
7205  3250          DCA B                                                    /ARI1467
7206  2200          ISZ VFOUT              /SET EXIT                         /ARI1468
7207  1045          TAD HORDER             /SET SIGN CHARACTER               /ARI1469
7210  4660          JMS I LSTSG                                              /ARI1470
7211  1250          TAD B                  /IS SCALING NEEDED                /ARI1471
7212  7450          SNA                                                      /ARI1472
7213  5223          JMP ROND               /NO                               /ARI1473
7214  7041          CIA                    /YES - SET COUNTER                /ARI1474
7215  3057          DCA SCK                                                  /ARI1475
7216  4407  SCAL,   JMS I FPNT             /MULTIPLY BY TEN                  /ARI1476
7217  3657          FMPY I LTEN                                              /ARI1477
7220     0          FEXT                                                     /ARI1478
7221  2057          ISZ SCK                /TEST COUNTER                     /ARI1479
7222  5216          JMP SCAL                                                 /ARI1480
7223  4407  ROND,   JMS I FPNT             /MAKE POSITIVE                    /ARI1481
7224     7          FABS                                                     /ARI1482
7225  1252          FADD HALF              /ROUND                            /ARI1483
7226     0          FEXT                                                     /ARI1484
7227  1044          TAD EXPONT             /IS NUMBER TOO LARGE              /ARI1485
7230  1255          TAD M30                                                  /ARI1486
7231  7710          SPA CLA                                                  /ARI1487
7232  5236          JMP FIX                /NO                               /ARI1488
7233  1256          TAD AST                /YES  PUT OUT *                   /ARI1489
7234  4470          JMS I LOPCH                                              /ARI1490
7235  5600          JMP I VFOUT            /RETURN                           /ARI1491
7236  1241  FIX,    TAD E27                /OBTAIN-DOUBLE PRECISION INTEGER  /ARI1492
7237  3040          DCA EXI                /(PREVIOUS FEXT LEAVES            /ARI1493
7240  4661          JMS I LALIG            /  ACIH NON-ZERO)                 /ARI1494
7241    27  E27,    27                     /CONSTANT  ERROR RETURN NOT USED  /ARI1495
7242  1045          TAD HORDER             /MOVE ARGUMENT                    /ARI1496
7243  3055          DCA HI                                                   /ARI1497
7244  1046          TAD LORDER                                               /ARI1498
7245  3056          DCA LO                                                   /ARI1499
7246  4262          JMS DPOP               /OUTPUT                           /ARI1500
7247     0  A,      0                      /NUMBER OF DIGITS BEFORE          /ARI1501
7250     0  B,      0                      /  AND AFTER POINT                /ARI1502
7251  5600          JMP I VFOUT            /RETURN                           /ARI1503
7252     0  HALF,   0                      /ROUNDING CONSTANT                /ARI1504
7253  2000          2000                                                     /ARI1505
7254     0          0                                                        /ARI1506
7255  7750  M30,    -30                                                      /ARI1507
7256   252  AST,    252                    /ASTERISK                         /ARI1508
7257  7450  LTEN,   TEN                                                      /ARI1509
7260  7164  LSTSG,  STSG                                                     /ARI1510
7261  6020  LALIG,  ALIG                                                     /ARI1511
                                                                             /ARI1512
            /BASIC DOUBLE-PRECISION OUTPUT                                   /ARI1513
7262     0  DPOP,   0                                                       /ARI1514
7263  1357          TAD M8                 /SET COUNTERS                     /ARI1515
7264  3373          DCA CHRK               /CHRK#-8                          /ARI1516
7265  1357          TAD M8                 /FLDK#-8+A+B                      /ARI1517
7266  1662          TAD I DPOP                                               /ARI1518
```

```
7267  2262          ISZ DPOP                                          /ARI1519
7270  1662          TAD I DPOP                                        /ARI1520
7271  3374          DCA FLDK                                          /ARI1521
7272  1360          TAD M7              /DPTK#-7+8                    /ARI1522
7273  1662          TAD I DPOP                                        /ARI1523
7274  3375          DCA DPTK                                          /ARI1524
7275  2262          ISZ DPOP            /SET EXIT                     /ARI1525
7276  3057          DCA CHAR            /CLEAR CHARACTER              /ARI1526
7277  3376          DCA PREV            /CLEAR PREVIOUS NON-SPACE INDICATOR /ARI1527
7300  1375  TESTU,  TAD DPTK           /TEST FOR UNITS POSITION      /ARI1528
7301  7650          SNA CLA                                           /ARI1529
7302  5310          JMP PRSGN                                         /ARI1530
7303  1374          TAD FLDK            /TEST FIELD COUNTER           /ARI1531
7304  7710          SPA CLA                                           /ARI1532
7305  5316          JMP TESTK           /NO OUTPUT                    /ARI1533
7306  1361          TAD SPACE           /OUTPUT SPACE                 /ARI1534
7307  5315          JMP PRCH                                          /ARI1535
7310  1060  PRSGN,  TAD SIGN            /PRINT SIGN                   /ARI1536
7311  4470          JMS I LOPCH                                       /ARI1537
7312  2376          ISZ PREV            /SET PREVIOUS NON-SPACE INDICATOR /ARI1538
7313  1057  STCH,   TAD CHAR            /SET UP CHARACTER             /ARI1539
7314  1362          TAD ZCH                                           /ARI1540
7315  4470  PRCH,   JMS I LOPCH         /PRINT CHARACTER OR SPACE     /ARI1541
7316  2373  TESTK,  ISZ CHRK            /TEST CHARACTER COUNTER       /ARI1542
7317  7410          SKP                                               /ARI1543
7320  5662          JMP I DPOP          /RETURN                       /ARI1544
7321  1375          TAD DPTK            /TEST FOR DECIMAL POINT       /ARI1545
7322  7640          SZA CLA                                           /ARI1546
7323  5326          JMP ADV                                           /ARI1547
7324  1363          TAD DCH             /PRINT DECIMAL POINT          /ARI1548
7325  4470          JMS I LOPCH                                       /ARI1549
7326  2375  ADV,    ISZ DPTK            /ADVANCE COUNTERS             /ARI1550
7327  7000          NOP                                               /ARI1551
7330  2374          ISZ FLDK                                          /ARI1552
7331  7000          NOP                                               /ARI1553
7332  3057          DCA CHAR            /CLEAR CHARACTER              /ARI1554
7333  1364          TAD HIMM            /SET TEMP AT MINUS            /ARI1555
7334  3771          DCA I LHTEMP        /   ONE MILLION               /ARI1556
7335  1365          TAD LOMM                                          /ARI1557
7336  3772          DCA I LLTEMP                                      /ARI1558
7337  4767  GEN,    JMS I LDBLAD        /GENERATE CHARACTER           /ARI1559
7340  7420          SNL                 /HAS TOO MUCH BEEN SUBTRACTED /ARI1560
7341  5344          JMP ADJ                                           /ARI1561
7342  2057          ISZ CHAR            /NO                           /ARI1562
7343  5337          JMP GEN                                           /ARI1563
7344  4766  ADJ,    JMS I LMSIGN        /YES  ADD IT BACK             /ARI1564
7345  4767          JMS I LDBLAD                                      /ARI1565
7346  4766          JMS I LMSIGN                                      /ARI1566
7347  4770          JMS I LMLTIO        /MULTIPY BY TEN               /ARI1567
7350  1376          TAD PREV            /TEST FOR PREVIOUS NON-SPACE OUTPUT /ARI1568
7351  7640          SZA CLA                                           /ARI1569
7352  5313          JMP STCH                                          /ARI1570
7353  1057          TAD CHAR            /TEST FOR ZERO                /ARI1571
7354  7640          SZA CLA                                           /ARI1572
7355  5310          JMP PRSGN           /NON-ZERO                     /ARI1573
7356  5300          JMP TESTU           /ZERO                         /ARI1574
7357  7770  M8,     -10                                               /ARI1575
7360  7771  M7,     -7                                                /ARI1576
7361   240  SPACE,  240                                               /ARI1577
7362   260  ZCH,    260                                               /ARI1578
7363   256  DCH,    256                                               /ARI1579
7364  7413  HIMM,   7413                /MINUS ONE MILLION            /ARI1580
7365  6700  LOMM,   6700                /   DOUBLE PRECISION          /ARI1581
7366  7151  LMSIGN, MSIGN                                            /ARI1582
7367  7137  LDBLAD, DUBLAD                                           /ARI1583
7370  7106  LMLTIO, MULTIO                                           /ARI1584
7371  7124  LHTEMP, HTEMP                                            /ARI1585
7372  7125  LLTEMP, LTEMP                                            /ARI1586
7373     0  CHRK,   0                   /CHARACTER COUNTER            /ARI1587
7374     0  FLDK,   0                   /FIELD COUNTER                /ARI1588
7375     0  DPTK,   0                   /DECIMAL POINT COUNTER        /ARI1589
7376     0  PREV,   0                   /PREVIOUS NON-SPACE INDICATOR /ARI1590
                                                                     /ARI1591
            *7400                                                    /ARI1592
            /FLOATING POINT INPUT                                    /ARI1593
7400     0  FLINTP, 0                                                /ARI1594
7401  4653          JMS I DPCVPT                                      /ARI1595
7402  1057          TAD CHAR                                          /ARI1596
7403  1247          TAD PER                                           /ARI1597
7404  7640          SZA CLA                                           /ARI1598
7405  5214          JMP FIGOI                                         /ARI1599
```

```
7406  1257          TAD PRSW            /PERIOD FOUND  IS IT A SECOND ONE        /ARI1600
7407  7640          SZA CLA                                                       /ARI1601
7410  5216          JMP FIG02           /YES.  TERMINATE                          /ARI1602
7411  3656          DCA I DPN           /NO.  SET NUMBER OF DIGITS TO 0           /ARI1603
7412  2257          ISZ PRSW            /SET PERIOD SWITCH                        /ARI1604
7413  5654          JMP I DPCSPT        /CONVERT REST OF STRING                   /ARI1605
7414  1257  FIG01,  TAD PRSW            /PERIOD READ IN PREVIOUSLY                /ARI1606
7415  7640          SZA CLA                                                       /ARI1607
7416  1656  FIG02,  TAD I DPN           /YES. PUT -- NUMBER IF DIGITS IN SEXP     /ARI1608
7417  7041          CMA IAC             /NO                                       /ARI1609
7420  3057          DCA SCK                                                       /ARI1610
7421  1060          TAD SIGN            /TEST SIGN                                /ARI1611
7422  7640          SZA CLA                                                       /ARI1612
7423  4655          JMS I MSGNPT                                                  /ARI1613
7424  1246  FIG03,  TAD C27                                                       /ARI1614
7425  3044          DCA EXPONT                                                    /ARI1615
7426  1055          TAD HI                                                        /ARI1616
7427  3045          DCA HORDER                                                    /ARI1617
7430  1056          TAD LO                                                        /ARI1618
7431  3046          DCA LORDER                                                    /ARI1619
7432  4407          JMS I FPNT          /NORMALIZE F. P. NUMBER                   /ARI1620
7433  7000          FNOR                                                          /ARI1621
7434     0          FEXT                                                          /ARI1622
7435  1057          TAD SCK                                                       /ARI1623
7436  7650          SNA CLA                                                       /ARI1624
7437  5600          JMP I FLINTP                                                  /ARI1625
7440  4407  SCALE,  JMS I FPNT          /DECIMAL POINT IS TO THE LEFT             /ARI1626
7441  4250          FDIV TEN            /DIVIDE BY TEN                            /ARI1627
7442     0          FEXT                                                          /ARI1628
7443  2057          ISZ SCK                                                       /ARI1629
7444  5240          JMP SCALE                                                     /ARI1630
7445  5600          JMP I FLINTP                                                  /ARI1631
7446    27  C27,    0027                                                          /ARI1632
7447  7522  PER,    -256                                                          /ARI1633
7450     4  TEN,    0004                                                          /ARI1634
7451  2400          2400                                                          /ARI1635
7452     0          0000                                                          /ARI1636
7453  7007  DPCVPT, DECONV                                                        /ARI1637
7454  7017  DPCSPT, DECON                                                         /ARI1638
7455  7151  MSGNPT, MSIGN                                                         /ARI1639
7456  7104  DPN,    DNUMBR                                                        /ARI1640
7457     0  PRSW,   0                                                             /ARI1641
                                                                                  /ARI1642
            /FIXED-FORMAT FLOATING OUTPUT                                         /ARI1643
7460     0  FOUT,   0                                                             /ARI1644
7461  4665          JMS I LVFOUT                                                  /ARI1645
7462     4          4                   /NUMBER OF DIGITS BEFORE                  /ARI1646
7463     3          3                   /  AND AFTER POINT                        /ARI1647
7464  5660          JMP I FOUT          /RETURN                                   /ARI1648
7465  7200  LVFOUT, VFOUT                                                         /ARI1649
                                                                                  /ARI1650
            /INTEGER OUTPUT                                                       /ARI1651
7466     0  IOUT,   0                                                             /ARI1652
7467  3056          DCA LO              /STORE ARGUMENT                           /ARI1653
7470  3055          DCA HI                                                        /ARI1654
7471  1056          TAD LO              /SET SIGN CHARACTER                       /ARI1655
7472  4703          JMS I LSTS                                                    /ARI1656
7473  1056          TAD LO              /MAKE POSITIVE                            /ARI1657
7474  7510          SPA                                                           /ARI1658
7475  7041          CIA                                                           /ARI1659
7476  3056          DCA LO                                                        /ARI1660
7477  4704          JMS I LDPOP         /OUTPUT                                   /ARI1661
7500     4          4                                                             /ARI1662
7501     0          0                                                             /ARI1663
7502  5666          JMP I IOUT          /RETURN                                   /ARI1664
7503  7164  LSTS,   STSG                                                          /ARI1665
7504  7262  LDPOP,  DPOP                                                          /ARI1666
                                                                                  /ARI1667
            /DOUBLE-PRECISION INTEGER OUTPUT                                      /ARI1668
7505     0  DPIOUT, 0                                                             /ARI1669
7506  1705          TAD I DPIOUT        /GET ARGUMENT                             /ARI1670
7507  3057          DCA TEMP                                                      /ARI1671
7510  1457          TAD I TEMP                                                    /ARI1672
7511  3055          DCA HI                                                        /ARI1673
7512  2057          ISZ TEMP                                                      /ARI1674
7513  1457          TAD I TEMP                                                    /ARI1675
7514  3056          DCA LO                                                        /ARI1676
7515  2305          ISZ DPIOUT          /SET EXIT                                 /ARI1677
7516  1055          TAD HI              /SET SIGN CHARACTER                       /ARI1678
7517  4703          JMS I LSTS                                                    /ARI1679
7520  1055          TAD HI              /MAKE POSITIVE                            /ARI1680
```

```
7521  7710          SPA CLA                                                  /ARI1681
7522  4655          JMS I MSGNPT                                             /ARI1682
7523  4704          JMS I LDPOP          /OUTPUT                             /ARI1683
7524     1          1                                                        /ARI1684
7525     0          0                                                        /ARI1685
7526  5705          JMP I DPIOUT         /RETURN                             /ARI1686
                                                                            /ARI1687
            *7527                                                           /ARI1688
            /TYPE ONE CHARACTER FROM AC BITS 6-11                           /ARI1689
7527     0  TYI,    0                                                       /ARI1690
7530   340          AND TTAB                                                /ARI1691
7531  1341          TAD TTAB+1                                              /ARI1692
7532  7510          SPA                                                     /ARI1693
7533  1342          TAD TTAB+2                                              /ARI1694
7534  1343          TAD TTAB+3                                              /ARI1695
7535  4470          JMS I LOPCH                                             /ARI1696
7536  5727          JMP I TYI                                               /ARI1697
7537     0  TEMY,    0                                                       /ARI1698
7540    77  TTAB,    77                                                      /ARI1699
7541  7740          7740                                                    /ARI1700
7542   100          100                                                     /ARI1701
7543   240          240                                                     /ARI1702
            /TYPE TWO CHARACTERS FROM AC BITS 0-5 AND 6-11 RESPECTIVELY     /ARI1703
7544     0  TY2,    0                                                       /ARI1704
7545  3337          DCA TEMY                                                /ARI1705
7546  1337          TAD TEMY                                                /ARI1706
7547  7012          RTR                                                     /ARI1707
7550  7012          RTR                                                     /ARI1708
7551  7012          RTR                                                     /ARI1709
7552  4327          JMS TYI                                                 /ARI1710
7553  1337          TAD TEMY                                                /ARI1711
7554  4327          JMS TYI                                                 /ARI1712
7555  5744          JMP I TY2                                               /ARI1713
                                                                            /ARI1714


            /INTERFACE ROUTINES                                             /INT   1
            /INCLUDES REVISED CHART RECORDER SUBROUTINES                    /INT   2
                                                                            /INT   3
            /PAGE ZERO                                                      /INT   4
            IRET#1                       /IRET#1 FOR PDP-5, IRET#0 FOR PDP-8 /INT   5
            *IRET+1                                                         /INT   6
   2  5403          JMP I LINT           /JUMP TO SORT OUT INTERRUPTS        /INT   7
   3  2306  LINT,   INT                                                     /INT   8
            *5                                                              /INT   9
   5  7400  LFNK,   7400                                                    /INT  10
   6  7460  LFOT,   7460                                                    /INT  11
   7  5600  LFPT,   5600                                                    /INT  12
  10     0          0                    /LOCATIONS 10 - 17 ARE AUTO INDEX REGISTERS/INT  13
  11  7070  ACWT,   7070                 /CONSTANT FOR WAITING-LOOP DISPLAY  /INT  14
  12     0          0                                                       /INT  15
  13     0          0                                                       /INT  16
  14     0          0                                                       /INT  17
  15     0          0                                                       /INT  18
  16     0          0                                                       /INT  19
  17     0  TSGNL,  0                    /USED BY KEYBOARD SIGNAL ROUTINE.   /INT  20
  20  5303  LNEG,   5303                 /LOCATIONS OF SUBROUTINES           /INT  21
  21  5572  LABS,   5572                                                    /INT  22
  22  5400  LART,   5400                                                    /INT  23
  23  4501  LADR,   4501                                                    /INT  24
  24  4761  LCOP,   4761                                                    /INT  25
  25  5114  LMV,    5114                                                    /INT  26
  26  4600  LFNP,   4600                                                    /INT  27
  27  4617  LFOP,   4617                                                    /INT  28
  30  4636  LUNT,   4636                                                    /INT  29
  31  4702  LPRP,   4702                                                    /INT  30
  32  5000  LTRN,   5000                                                    /INT  31
  33  5146  LMM,    5146                                                    /INT  32
  34  5550  LFIX,   5550                                                    /INT  33
  35  4400  LANG,   4400                                                    /INT  34
  36  3600  LDAT,   3600                                                    /INT  35
  37  4253  LSTD,   4253                                                    /INT  36
  40     0  EXI,    0                    /LOCATIONS 40 - 61 USED BY F. P. INTERPRETE/INT  37
  41     0  ACIH,   0                    /INPUT/OUTPUT                       /INT  38
  42     0  ACIL,   0                                                       /INT  39
  43     0  OVRI,   0                                                       /INT  40
  44     0  EXP,    0                    /FLOATING POINT ACCUMULATOR         /INT  41
  45     0  HORD,   0                                                       /INT  42
  46     0  LORD,   0                                                       /INT  43
```

```
 47     0  OVR2,   0                                                    /INT  44
 50     0  EXP1,   0                                                    /INT  45
 51     0  QUOL,   0                                                    /INT  46
 52     0  FAC1,   0                                                    /INT  47
 53     0          0                                                    /INT  48
 54     0          0                                                    /INT  49
 55     0  HI,     0                                                    /INT  50
 56     0  LO,     0                                                    /INT  51
 57     0  CHAR, SCK, TEMP, 0                                           /INT  52
 60     0  SIGN,   0                                                    /INT  53
 61     0  FLAG,   0                                                    /INT  54
 62   335  LSET,   SETUP                                                /INT  55
 63   462  LMI,    MI                                                   /INT  56
 64  7466  LIOUT,  7466                                                 /INT  57
 65  2373  LTSIN,  TSIN                                                 /INT  58
 66   210  LOMGA,  OMGA                                                 /INT  59
 67  2121  LIPCH,  IPCH                                                 /INT  60
 70  1260  LOPCH,  OPCH                                                 /INT  61
 71  5354  LFLT,   5354                                                 /INT  62
 72  5045  LVV,    5045                                                 /INT  63
 73  7000  LINTIN, 7000                                                 /INT  64
 74  4322  LRNG,   4322                                                 /INT  65
 75  4526  LGET,   4526                                                 /INT  66
 76  4553  LPUT,   4553                                                 /INT  67
 77     0  BLCK,   0                                                    /INT  68
100     0  COMN,   0                        /TEMPORARIES                /INT  69
           *0140                                                        /INT  70
140     6  DEG,    0006                     /CONSTANTS                  /INT  71
141  3451          3451                                                 /INT  72
142  3560          3560                                                 /INT  73
143  7774  MIN4,   -4                                                   /INT  74
144     0          0                                                    /INT  75
145  2475  LWHERE, WHERE                                                /INT  76
146     1  ONE,    0001                                                 /INT  77
147  2000          2000                                                 /INT  78
150     0          0000                                                 /INT  79
151     2  TWO,    0002                                                 /INT  80
152  2000          2000                                                 /INT  81
153     0          0000                                                 /INT  82
154     3  THR,    3                                                    /INT  83
155  7776  MTWO,   7776                                                 /INT  84
156  7775  MTHR,   7775                                                 /INT  85
157  7754  SSK1,   -24                                                  /INT  86
160  7774  SSK2,   -4                                                   /INT  87
161     0          0                                                    /INT  88
162   400  LMOTOR, MOTOR                                                /INT  89
163  7470  MTWH,   -310                                                 /INT  90
164   307  K199,   307                                                  /INT  91
165  6766  LCRLF,  6766                                                 /INT  92
166   771  LRTMI,  771                                                  /INT  93
167   553  LWMOT,  WMOT                                                 /INT  94
170     0  COUNT,  0                                                    /INT  95
171     0          0                                                    /INT  96
172     0          0                                                    /INT  97
173     0  ACCCNT, 0                                                    /INT  98
174     0          0                                                    /INT  99
175     0          0                                                    /INT 100
                                                                        /INT 101
           TTH#624                                                      /INT 102
           OMG#TTH+3                                                    /INT 103
           CHI#OMG+3                                                    /INT 104
           PHI#CHI+3                                                    /INT 105
                                                                        /INT 106
           /INITIALIZE AND WAIT FOR KEYBOARD SIGNAL                     /INT 107
                                                                        /INT 108
           *0200                                                        /INT 109
           /START OF OVERALL PROGRAM                                    /INT 110
200  4617  INWT, JMS   I      LINC  /INITIALIZE CLOCK ROUTINES          /INT 111
201  4622        JMS   I      LINM  /INITIALIZE MOTORS.                 /INT 112
202  4621        JMS   I      LINK  /INITIALIZE KEYBOARD/READER         /INT 113
203  4620        JMS   I      LINP  /INITIALIZE TELEPRINTER/PUNCH       /INT 114
204  7040        CMA                /CLEAR STATUS FLAGS                 /INT 115
205  6304        6304                                                   /INT 116
206  7200        CLA                                                    /INT 117
207  6001        ION                /ENABLE INTERRUPTS                  /INT 118
210  7000  OMGA, NOP                /CHANGED TO AUDIO OUTPUT FOR DATA COLLECTION PRO/INT 119
211  7000        NOP                                                    /INT 120
212  7000        NOP                                                    /INT 121
213  4565        JMS   I      LCRLF /CARRIAGE RETURN LINE FEED          /INT 122
214  3077        DCA          BLCK  /CLEAR INDICATOR USED BY PUT        /INT 123
215  1011        TAD          ACWT  /DISPLAY 7070                       /INT 124
```

```
216  5216        JMP                 /WAITING LOOP                                  /INT 125
217  2677  LINC, INIC                                                               /INT 126
220  1307  LINP, INIP                                                               /INT 127
221  2130  LINK, INIK                                                               /INT 128
222   540  LINM, INIM                                                               /INT 129
                                                                                    /INT 130
           /MARKER INTERRUPT SUBROUTINE CALLED EACH TIME DEGREE MARKER IS FOUND     /INT 131
223     0  MARK,    0                                                              /INT 132
224  1623          TAD I MARK          /GET ADDRESS OF OVERSHOOT INDICATOR.        /INT 133
225  3324          DCA TMARK                                                       /INT 134
226  1324          TAD TMARK                                                       /INT 135
227  3325          DCA OVER                                                        /INT 136
230  2324          ISZ TMARK           /ADVANCE TO ADDRESS OF SLOW START CONSTANT./INT 137
231  1724          TAD I TMARK         /HAS SLOW START JUST BEGUN.                 /INT 138
232  1327          TAD K15                                                         /INT 139
233  7710          SPA CLA                                                         /INT 140
234  5465          JMP I LTSIN         /YES. IGNORE MARKER.                        /INT 141
235  2223          ISZ MARK            /ADVANCE TO ADDRESS OF CHECK INDICATOR.     /INT 142
236  3623          DCA I MARK          /SET CHECK INDICATOR # 0.                   /INT 143
237  2324          ISZ TMARK           /ADVANCE TO AND SAVE ADDRESS OF CURRENT DEG/INT 144
240  2324          ISZ TMARK           /   POSITION.                               /INT 145
241  1324          TAD TMARK                                                       /INT 146
242  3326          DCA CDEG                                                        /INT 147
243  2324          ISZ TMARK           /ADVANCE TO ADDRESS OF CURRENT 200THS POSIT/INT 148
244  1725          TAD I OVER          /TEST FOR DIRECTION OF MOTION.              /INT 149
245  7710          SPA CLA                                                         /INT 150
246  5253          JMP BACK            /BACKWARD.                                  /INT 151
247  7001          IAC                 /FORWARD. SET INCREMENT FOR DEGREES # +1.   /INT 152
250  3325          DCA DDEG                                                        /INT 153
251  1724          TAD I TMARK         /H # 200THS.                                /INT 154
252  5260          JMP MARK1                                                       /INT 155
253  7240  BACK,   CLA CMA             /SET INCREMENT FOR DEGREES # -1.            /INT 156
254  3325          DCA DDEG                                                        /INT 157
255  1724          TAD I TMARK         /H# 199 - 200THS.                           /INT 158
256  7041          CIA                                                             /INT 159
257  1164          TAD K199                                                        /INT 160
260  3330  MARK1,  DCA H                                                           /INT 161
261  7240          CLA CMA             /TEST H-1.                                  /INT 162
262  1330          TAD H                                                           /INT 163
263  7750          SPA SNA CLA                                                     /INT 164
264  5465          JMP I LTSIN         /POSITION CORRECT. TERMINATE INTERRUPT.     /INT 165
265  2223          ISZ MARK            /ERROR IN POSITION. ADVANCE TO ERROR INDICA/INT 166
266  2623          ISZ I MARK          /  INCREMENT.                               /INT 167
267  7000          NOP                                                             /INT 168
270  2223          ISZ MARK            /ADVANCE TO ADDRESS OF SERIOUS ERROR INDICA/INT 169
271  1330          TAD H               /TEST H-100.                                /INT 170
272  1332          TAD M100                                                        /INT 171
273  7700          SMA CLA                                                         /INT 172
274  5304          JMP MARK2                                                       /INT 173
275  7001          IAC                 /HX#1.                                      /INT 174
276  3331          DCA HX                                                          /INT 175
277  1330          TAD H               /TEST H-10.                                 /INT 176
300  1333          TAD M10                                                         /INT 177
301  7750          SPA SNA CLA                                                     /INT 178
302  5315          JMP MARK4                                                       /INT 179
303  5313          JMP MARK3                                                       /INT 180
304  3331  MARK2,  DCA HX              /HX#0.                                      /INT 181
305  1726          TAD I CDEG          /DEGREE # DEGREE + INCREMENT.               /INT 182
306  1325          TAD DDEG                                                        /INT 183
307  3726          DCA I CDEG                                                      /INT 184
310  1330          TAD H               /TEST H-190.                                /INT 185
311  1334          TAD M190                                                        /INT 186
312  7750          SPA SNA CLA                                                     /INT 187
313  2623  MARK3,  ISZ I MARK          /INCREMENT SERIOUS ERROR INDICATOR.         /INT 188
314  7000          NOP                                                             /INT 189
315  1331  MARK4,  TAD HX                                                          /INT 190
316  2325          ISZ DDEG            /TEST DIRECTION.                            /INT 191
317  5322          JMP MARK5           /FORWARD. 200THS # HX                       /INT 192
320  7041          CIA                 /BACKWARD. 200THS # 199-HX.                 /INT 193
321  1164          TAD K199                                                        /INT 194
322  3724  MARK5,  DCA I TMARK                                                     /INT 195
323  5465          JMP I LTSIN         /TERMINATE INTERRUPT.                       /INT 196
324     0  TMARK,   0                                                              /INT 197
325     0  OVER,DDEG,0                                                             /INT 198
326     0  CDEG,    0                                                              /INT 199
327    17  K15,     17                                                             /INT 200
330     0  H,       0                                                              /INT 201
331     0  HX,      0                                                              /INT 202
332  7634  M100,    -144                                                           /INT 203
333  7766  M10,     -12                                                            /INT 204
334  7502  M190,    -276                                                           /INT 205
                                                                                    /INT 206
```

```
          /SEPARATE ANGLE INTO DEGREES AND 200THS                                  /INT 207
335     0 SETUP,  0                                                                /INT 208
336  1735         TAD I SETUP          /PICK UP ADDRESS FOR STORING RESULT.        /INT 209
337  3364         DCA ADDEG                                                        /INT 210
340  2335         ISZ SETUP            /SET RETURN.                                /INT 211
341  4407         JMS I LFPT                                                       /INT 212
342  1371         FADD CONST           /ADD 360+ROUNDING CONSTANT TO ANGLE IN FL.P/INT 213
343  6365         FPUT SETA            /STORE SUM.                                 /INT 214
344     0         FEXT                                                             /INT 215
345  4434         JMS I LFIX           /TRUNCATE TO INTEGER.                       /INT 216
346  3370         DCA  SETB            /STORE RESULT.                              /INT 217
347  1370         TAD SETB             /SUBTRACT 360.                              /INT 218
350  1374         TAD M360                                                         /INT 219
351  3764         DCA I ADDEG          /PUT INTO SPECIFIED LOCATION FOR DEGREE PAR/INT 220
352  1370         TAD SETB             /GET 200THS PART                            /INT 221
353  4471         JMS I LFLT                                                       /INT 222
354  4407         JMS I LFPT                                                       /INT 223
355  2365         FSUB SETA                                                        /INT 224
356  3375         FMPY MF200                                                       /INT 225
357     0         FEXT                                                             /INT 226
360  4434         JMS I LFIX           /TRUNCATE TO INTEGER.                       /INT 227
361  2364         ISZ ADDEG            /GET ADDRESS OF 200THS.                     /INT 228
362  3764         DCA I ADDEG          /PUT RESULT INTO LOCATION OF 200THS PART.   /INT 229
363  5735         JMP I SETUP          /RETURN                                     /INT 230
364     0 ADDEG,  0                                                                /INT 231
365     0 SETA,   0                                                                /INT 232
366     0         0                                                                /INT 233
367     0         0                                                                /INT 234
370     0 SETB,   0                                                                /INT 235
371    11 CONST,  0011                 /360.0025                                   /INT 236
372  2640         2640                                                             /INT 237
373    51         0051                                                             /INT 238
374  7230 M360,   -550                /-360                                       /INT 239
375    10 MF200,  0010                /-200                                       /INT 240
376  4700         4700                                                             /INT 241
377     0         0000                                                             /INT 242
                                                                                   /INT 243
          *400                                                                     /INT 244
          /MOTOR DRIVE SUBROUTINE WHICH SETS UP FOR PULSING A MOTOR                /INT 245
400     0 MOTOR,  0                                                                /INT 246
401  1600         TAD I MOTOR          /TURN OFF MOTOR.                            /INT 247
402  3214         DCA MOTI                                                         /INT 248
403  3614         DCA I MOTI                                                       /INT 249
404  1214         TAD MOTI             /SET ADDRESS FOR COPYING ARGUMENTS.         /INT 250
405  1274         TAD MIN8                                                         /INT 251
406  3214         DCA MOTI                                                         /INT 252
407  1214         TAD MOTI                                                         /INT 253
410  3257         DCA MOT5                                                         /INT 254
411  2200         ISZ MOTOR            /SET RETURN                                 /INT 255
412  4424         JMS I LCOP           /COPY ARGUMENTS TO THIS PAGE                /INT 256
413  7767         -11                                                              /INT 257
414     0 MOTI,   0                                                                /INT 258
415   463         LANGL                                                            /INT 259
416  4407         JMS I LFPT           /SEPARATE ANGLE INTO DEGREES AND 200THS.    /INT 260
417  5663         FGET I LANGL         /PUT ANGLE INTO FLOATING POINT ACCUMULATOR./INT 261
420     0         FEXT                                                             /INT 262
421  4462         JMS I LSET           /CALL SUBROUTINE TO GET DEGREES AND 200THS./INT 263
422   471         DEGD                                                             /INT 264
423  1271         TAD DEGD             /STORE NEGATIVES OF RESULTS AS DESIRED SETT/INT 265
424  7041         CIA                                                              /INT 266
425  3271         DCA DEGD                                                         /INT 267
426  1272         TAD HUND                                                         /INT 268
427  7041         CIA                                                              /INT 269
430  3272         DCA HUND                                                         /INT 270
431  1267 MOTC,   TAD DEGR             /COMPARE CURRENT AND DESIRED POSITIONS.     /INT 271
432  1271         TAD DEGD                                                         /INT 272
433  7440         SZA                                                              /INT 273
434  5275         JMP MOTA                                                         /INT 274
435  1270         TAD HUN                                                          /INT 275
436  1272         TAD HUND                                                         /INT 276
437  7450         SNA                                                              /INT 277
440  5254         JMP MOT4             /RETURN IF CURRENT AND DESIRED POSITIONS AR/INT 278
441  7710 MOT2,   SPA CLA                                                          /INT 279
442  5246         JMP MOT3             /NEED TO PULSE FORWARD. SET OVERSHOOT INDIC/INT 280
443  2271         ISZ DEGD             /NEED TO PULSE BACKWARD AND OVERSHOOT.      /INT 281
444  7000         NOP                  /GO TO DESIRED DEGREE SETTING-1.            /INT 282
445  7240         CLA CMA              /SET OVERSHOOT INDICATOR # -1.              /INT 283
446  3264 MOT3,   DCA OVRS                                                         /INT 284
447  1157         TAD SSKI             /SET SLOW START.                            /INT 285
450  3265         DCA SSI                                                          /INT 286
```

```
451  1160          TAD SSK2                                                  /INT 287
452  3266          DCA SS2                                                   /INT 288
453  2273          ISZ MIND              /SET MOTOR INDICATOR.               /INT 289
454  4424  MOT4,   JMS I LCOP            /COPY ARGUMENTS BACK AS SET.        /INT 290
455  7767          -11                                                       /INT 291
456   463          LANGL                                                     /INT 292
457     0  MOT5,   0                                                         /INT 293
460  2262          ISZ MI                /TURN ON OVERALL MOTOR INDICATOR    /INT 294
461  5600          JMP I MOTOR           /RETURN                             /INT 295
462     0  MI,     0                                                         /INT 296
463     0  LANGL,  0                                                         /INT 297
464     0  OVRS,   0                                                         /INT 298
465     0  SS1,    0                                                         /INT 299
466     0  SS2,    0                                                         /INT 300
467     0  DEGR,   0                                                         /INT 301
470     0  HUN,    0                                                         /INT 302
471     0  DEGD,   0                                                         /INT 303
472     0  HUND,   0                                                         /INT 304
473     0  MIND,   0                                                         /INT 305
474  7770  MIN8,   -10                                                       /INT 306
                                                                            /INT 307
475  7510  MOTA,   SPA                   /IS THE CURRENT SETTING MORE THAN 180 DEGRE/INT 308
476  5310          JMP MOTD              /GREATER THAN THE DESIRED SETTING.  /INT 309
477  7041          CIA                                                       /INT 310
500  1315          TAD K180                                                  /INT 311
501  7700          SMA CLA                                                   /INT 312
502  5243          JMP MOT2+2            /NO.                                /INT 313
503  1316          TAD K360              /YES. CURRENT #CURRENT-360, TO TAKE SHORTES/INT 314
504  7041          CIA                                                       /INT 315
505  1267  MOTB,   TAD DEGR                                                  /INT 316
506  3267          DCA DEGR                                                  /INT 317
507  5231          JMP MOTC                                                  /INT 318
510  1315  MOTD,   TAD K180             /IS THE DESIRED SETTING MORE THAN 180 DEGRE/INT 319
511  7700          SMA CLA               /GREATER THAN THE CURRENT SETTING.  /INT 320
512  5246          JMP MOT3              /NO.                                /INT 321
513  1316          TAD K360              /YES. CURRENT #CURRENT +360, TO TAKE SHORTE/INT 322
514  5305          JMP MOTB                                                  /INT 323
515   264  K180,   264                                                       /INT 324
516   550  K360,   550                                                       /INT 325
                                                                            /INT 326
          /MOTOR STARTING ROUTINE, STARTS MOTORS DRIVING TO THE ANGLES SET IN LOCA/INT 327
          /624-637, TTH, OMG, CHI, PHI                                      /INT 328
517     0  MOTST,  0                                                         /INT 329
520  4200          JMS MOTOR                                                 /INT 330
521  1476  LMIT,   MIT                                                       /INT 331
522  4200          JMS MOTOR                                                 /INT 332
523  1575  LMIO,   MIO                                                       /INT 333
524  4200          JMS MOTOR                                                 /INT 334
525  1676  LMIC,   MIC                                                       /INT 335
526  4200          JMS MOTOR                                                 /INT 336
527  1775  LMIP,   MIP                                                       /INT 337
530  5717          JMP I MOTST                                               /INT 338
                                                                            /INT 339
          /DRIVE TO CALCULATED ANGLES.                                      /INT 340
          CTTH#4465                                                         /INT 341
531     0  MOTSET, 0                                                         /INT 342
532  4424          JMS I LCOP            /COPY CALCULATED ANGLES TO SETTING LOCATION/INT 343
533  7764          -14                                                       /INT 344
534  4465          CTTH                                                      /INT 345
535   624          TTH                                                       /INT 346
536  4317          JMS MOTST             /START MOTORS.                      /INT 347
537  5731          JMP I MOTSET                                              /INT 348
                                                                            /INT 349
          /INITIALIZE MOTORS, CONTROL REGISTER, AND RATEMETER(IF IN SET-UP) /INT 350
540     0  INIM,   0                                                         /INT 351
541  3721          DCA I LMIT                                                /INT 352
542  3723          DCA I LMIO                                                /INT 353
543  3725          DCA I LMIC                                                /INT 354
544  3727          DCA I LMIP                                                /INT 355
545  7000          NOP                   /VARIABLE INSTRUCTION TO INITIALIZE RATEMET/INT 356
546  1752          TAD I LSTOUT          /SET CONTROL REGISTER TO PREVIOUS CONDITION/INT 357
547  6356          6356                                                      /INT 358
550  7200          CLA                                                       /INT 359
551  5740          JMP I INIM                                                /INT 360
552  2675  LSTOUT, STOUT                                                     /INT 361
                                                                            /INT 362
          /SUBROUTINE TO WAIT FOR MOTORS TO STOP.                           /INT 363
553     0  WMOT,   0                                                         /INT 364
554  1262          TAD MI                                                    /INT 365
555  7640          SZA CLA                                                   /INT 366
556  5354          JMP .-2                                                   /INT 367
```

```
557  5753          JMP I WMOT                                                  /INT 368
                                                                               /INT 369
            /INFORM COMPUTER OF CURRENT POSITICNS OF SHAFTS BY TYPING IN DIAL SETTIN/INT 370
            /IT.                                                               /INT 371
560  4370  TINIT,  JMS POSN            /SET INITIAL 2THETA                     /INT 372
561  1472          DT                                                          /INT 373
            /IO.                                                               /INT 374
562  4370  OINIT,  JMS POSN            /SET INITIAL OMEGA                      /INT 375
563  1571          DO                                                          /INT 376
            /IC.                                                               /INT 377
564  4370  CINIT,  JMS POSN            /SET INITIAL CHI.                       /INT 378
565  1672          DC                                                          /INT 379
            /IP.                                                               /INT 380
566  4370  PINIT,  JMS POSN            /SET INITIAL PHI.                       /INT 381
567  1771          DP                                                          /INT 382
                                                                               /INT 383
            /SUBROUTINE USED TO INITIALIZE ANGLES                              /INT 384
570     0  POSN,   0                                                           /INT 385
571  1770          TAD I POSN                                                  /INT 386
572  3375          DCA POSNI                                                   /INT 387
573  4405          JMS I LFNK                                                  /INT 388
574  4462          JMS I LSET                                                  /INT 389
575     0  POSNI,  0                                                           /INT 390
576  5466          JMP I LOMGA                                                 /INT 391
                                                                               /INT 392
            *1000                                                              /INT 393
            /2THETA MARKER INTERRUPT                                           /INT 394
1000 4624  MRKT,   JMS I LMARK                                                 /INT 395
1001 1467          OVRT                                                        /INT 396
1002    0  CKT,    0                                                           /INT 397
1003    0  ERT,    0                                                           /INT 398
1004    0  TISE,   0                                                           /INT 399
                                                                               /INT 400
            /OMEGA MARKER INTERRUPT                                            /INT 401
1005 4624  MRKO,   JMS I LMARK                                                 /INT 402
1006 1566          OVRO                                                        /INT 403
1007    0  CKO,    0                                                           /INT 404
1010    0  ERO,    0                                                           /INT 405
1011    0  OISE,   0                                                           /INT 406
                                                                               /INT 407
            /CHI MARKER INTERRUPT                                              /INT 408
1012 4624  MRKC,   JMS I LMARK                                                 /INT 409
1013 1667          OVRC                                                        /INT 410
1014    0  CKC,    0                                                           /INT 411
1015    0  ERC,    0                                                           /INT 412
1016    0  CISE,   0                                                           /INT 413
                                                                               /INT 414
            /PHI MARKER INTERRUPT                                              /INT 415
1017 4624  MRKP,   JMS I LMARK                                                 /INT 416
1020 1766          OVRP                                                        /INT 417
1021    0  CKP,    0                                                           /INT 418
1022    0  ERP,    0                                                           /INT 419
1023    0  PISE,   0                                                           /INT 420
1024  223  LMARK,  MARK                                                        /INT 421
                                                                               /INT 422
            /SUBROUTINE TO CHECK POSITICN                                      /INT 423
1025    0  CHECK,  0                                                           /INT 424
1026 4567          JMS I LWMOT            /WAIT FOR MCTORS TO STOP.           /INT 425
1027 2202          ISZ CKT                /SET CHECK POSITICN INDICATORS      /INT 426
1030 2207          ISZ CKO                                                    /INT 427
1031 2214          ISZ CKC                                                    /INT 428
1032 2221          ISZ CKP                                                    /INT 429
1033 4545          JMS I LWHERE           /SET FLOATING POINT ANGLES TO CURRENT POSIT/INT 430
1034 4315          JMS DRVCK              /DRIVE MCTORS BACKWARD TWO CEGREES. /INT 431
1035 2151          2151                   /OCTAL INSTRUCTION, FSUB TWO.       /INT 432
1036 4315          JMS DRVCK              /DRIVE MOTORS FORWARD TWO CEGREES.  /INT 433
1037 1151          1151                   /OCTAL INSTRUCTICN, FADD TWO.       /INT 434
1040 1625          TAD I CHECK            /TEST ARGUMENT TO SEE IF RESULTS ARE TO BE /INT 435
1041 7650          SNA CLA                                                    /INT 436
1042 5264          JMP CHCK3              /DO NCT PRINT.                      /INT 437
1043 1143          TAD MIN4               /PRINT CHECK INDICATORS, ERRORS, SERIOUS ER/INT 438
1044 3310          DCA KCKI                                                   /INT 439
1045 1312          TAD PLOC                                                   /INT 440
1046 3311          OCA TCKI                                                   /INT 441
1047 1156  CHCKI,  TAD MTHR                                                   /INT 442
1050 3313          DCA KCK2                                                   /INT 443
1051 1711  CHCK2,  TAD I TCKI                                                 /INT 444
1052 4464          JMS I LIOUT                                                /INT 445
1053 2311          ISZ TCKI                                                   /INT 446
1054 2313          ISZ KCK2                                                   /INT 447
1055 5251          JMP CHCK2                                                  /INT 448
```

```
1056  4565          JMS I LCRLF                                          /INT 449
1057  1311          TAD TCKI                                             /INT 450
1060  1314          TAD KADV                                             /INT 451
1061  3311          DCA TCKI                                             /INT 452
1062  2310          ISZ KCKI                                             /INT 453
1063  5247          JMP CHCKI                                            /INT 454
1064  1202  CHCK3,  TAD CKT            /TEST INDICATORS TO SEE IF MARKERS WERE NOT/INT 455
1065  1207          TAD CKO            / RECEIVED OR SERIOUS ERRORS WERE FOUND.  /INT 456
1066  1214          TAD CKC                                              /INT 457
1067  1221          TAD CKP                                              /INT 458
1070  1204          TAD TISE                                             /INT 459
1071  1211          TAD OISE                                             /INT 460
1072  1216          TAD CISE                                             /INT 461
1073  1223          TAD PISE                                             /INT 462
1074  7650          SNA CLA                                              /INT 463
1075  2225          ISZ CHECK          /ADVANCE TO NORMAL RETURN, NO ERRORS.  /INT 464
1076  3203          DCA ERT                                              /INT 465
1077  3210          DCA ERO                                              /INT 466
1100  3215          DCA ERC                                              /INT 467
1101  3222          DCA ERP                                              /INT 468
1102  3204          DCA TISE                                             /INT 469
1103  3211          DCA OISE                                             /INT 470
1104  3216          DCA CISE                                             /INT 471
1105  3223          DCA PISE                                             /INT 472
1106  2225          ISZ CHECK          /SET RETURN.                      /INT 473
1107  5625          JMP I CHECK        /RETURN.                          /INT 474
1110     0  KCKI,   0                                                    /INT 475
1111     0  TCKI,   0                                                    /INT 476
1112  1002  PLOC,   CKT                                                  /INT 477
1113     0  KCK2,   0                                                    /INT 478
1114     2  KADV,   2                                                    /INT 479
                                                                         /INT 480
            /ROUTINE USED BY CHECK TO DRIVE MOTORS 2 DEGREES.            /INT 481
1115     0  DRVCK,  0                                                    /INT 482
1116  1715          TAD I DRVCK        /SET INSTRUCTION TO ADD OR SUBTRACT 2 DEGRE/INT 483
1117  3326          DCA INST                                             /INT 484
1120  1143          TAD MIN4           /SET UP LOOP.                     /INT 485
1121  3342          DCA DRVK                                             /INT 486
1122  1343          TAD ATTH                                             /INT 487
1123  3344          DCA DRVT                                             /INT 488
1124  4407  DRVI,   JMS I LFPT                                           /INT 489
1125  5744          FGET I DRVT                                          /INT 490
1126     0  INST,   0                  /VARIABLE INSTRUCTION, ARGUMENT OF SUBROUTI/INT 491
1127  6744          FPUT I DRVT                                          /INT 492
1130     0          FEXT                                                 /INT 493
1131  1344          TAD DRVT                                             /INT 494
1132  1154          TAD THR                                              /INT 495
1133  3344          DCA DRVT                                             /INT 496
1134  2342          ISZ DRVK                                             /INT 497
1135  5324          JMP DRVI                                             /INT 498
1136  4745          JMS I AMOTST       /START MOTORS.                    /INT 499
1137  4567          JMS I LWMOT        /WAIT FOR MOTORS TO STOP.         /INT 500
1140  2315          ISZ DRVCK          /SET RETURN.                      /INT 501
1141  5715          JMP I DRVCK        /RETURN.                          /INT 502
1142     0  DRVK,   0                                                    /INT 503
1143   624  ATTH,   TTH                                                  /INT 504
1144     0  DRVT,   0                                                    /INT 505
1145   517  AMOTST, MOTST                                                /INT 506
                                                                         /INT 507
            /CHART RECORDER SUBROUTINE                                   /INT 508
1146     0  CREC,   0                                                    /INT 509
1147  1365          TAD BASE           /ADD BASE TO SCALED COUNT         /INT 510
1150  3362          DCA CRK            /SAVE                             /INT 511
1151  1764  CRW,    TAD I LCRT         /WAIT FOR DELAY                   /INT 512
1152  7640          SZA CLA                                              /INT 513
1153  5351          JMP CRW                                              /INT 514
1154  1362          TAD CRK            /RECORD STEP                      /INT 515
1155  6377          6377                                                 /INT 516
1156  7200          CLA                                                  /INT 517
1157  1363          TAD CRC            /SET DELAY                        /INT 518
1160  3764          DCA I LCRT                                           /INT 519
1161  5746          JMP I CREC         /RETURN                           /INT 520
1162     0  CRK,    0                  /TEMPORARY                        /INT 521
1163  7773  CRC,    -5                 /CONSTANT FOR HALF-SECOND DELAY   /INT 522
1164  2673  LCRT,   CRT                /POINTER                          /INT 523
1165   131  BASE,   131                /VALUE WHICH PUTS PEN AT ZERO POSITION /INT 524
                                                                         /INT 525
            /TY. ALLOW TYPING OF COMMENTS, LEADER, ETC.                  /INT 526
                                                                         /INT 527
            *1174                                                        /INT 528
1174  4473  TYPE,   JMS I LINTIN                                         /INT 529
```

```
1175  7200          CLA                                                    /INT 530
1176  5374          JMP TYPE                                               /INT 531
                                                                           /INT 532
            /TELEPRINTER/PUNCH ROUTINES                                    /INT 533
                                                                           /INT 534
            *1200                                                          /INT 535
1200     0  BUFF, 0                  /CHARACTER BUFFER                     /INT 536
1201     0        0                  /(MUST BEGIN AT ADDRESS               /INT 537
1202     0        0                  /WHICH IS MULTIPLE OF                 /INT 538
1203     0        0                  /40(8))                               /INT 539
1204     0        0                                                        /INT 540
1205     0        0                                                        /INT 541
1206     0        0                                                        /INT 542
1207     0        0                                                        /INT 543
1210     0        0                                                        /INT 544
1211     0        0                                                        /INT 545
1212     0        0                                                        /INT 546
1213     0        0                                                        /INT 547
1214     0        0                                                        /INT 548
1215     0        0                                                        /INT 549
1216     0        0                                                        /INT 550
1217     0        0                                                        /INT 551
1220  6042  TELE, TCF                  /TURN OFF PUNCH FLAG                 /INT 552
1221  1326        TAD          N      /TEST N                              /INT 553
1222  7640        SZA    CLA                                               /INT 554
1223  5226        JMP          P                                           /INT 555
1224  7001        IAC                 /RDY#1                               /INT 556
1225  5254        JMP          EXIT                                        /INT 557
1226  1000  P,    TAD          0      /VARIABLE ADDRESS                    /INT 558
1227  3256        DCA          TPCH2  /SAVE CHARACTER                      /INT 559
1230  1256        TAD          TPCH2                                       /INT 560
1231  7100        CLL                 /CHECK PARITY                        /INT 561
1232  7430  PARTY,SZL                                                      /INT 562
1233  7040        CMA                                                      /INT 563
1234  7010        RAR                                                      /INT 564
1235  7510        SPA                                                      /INT 565
1236  7040        CMA                                                      /INT 566
1237  7440        SZA                                                      /INT 567
1240  5232        JMP          PARTY                                       /INT 568
1241  1256        TAD          TPCH2                                       /INT 569
1242  7420        SNL                 /LINK#1 FOR ODD PARITY, LINK#0 FOR EVEN PARITY. /INT 570
1243   257        AND          PARK                                        /INT 571
1244  6046        TLS                 /PUNCH CHARACTER                     /INT 572
1245  7240        CLA    CMA          /N#N-1                               /INT 573
1246  1326        TAD          N                                           /INT 574
1247  3326        DCA          N                                           /INT 575
1250  1226        TAD          P      /P#MODF(P+1,16)                      /INT 576
1251  7001        IAC                                                      /INT 577
1252   321        AND          MASK                                        /INT 578
1253  3226        DCA          P                                           /INT 579
1254  3327  EXIT, DCA          RDY    /RDY#1 OR 0                          /INT 580
1255  5465        JMP    I     LTSIN  /TERMINATE INTERRUPT                 /INT 581
1256     0  TPCH2,0                                                       /INT 582
1257   177  PARK, 0177                                                    /INT 583
                                                                           /INT 584
            /STORE A CHARACTER FOR OUTPUT                                  /INT 585
1260     0  OPCH, 0                  /SUBROUTINE ENTRY                    /INT 586
1261  3330        DCA          TOPCH  /SAVE CHARACTER                      /INT 587
1262  1326  WTOP, TAD          N      /TEST FOR BUFFER FULL                /INT 588
1263  1322        TAD          MSXN                                        /INT 589
1264  7650        SNA    CLA                                               /INT 590
1265  5262        JMP          WTOP                                        /INT 591
1266  6002        IOF                 /INHIBIT INTERRUPTS                  /INT 592
1267  1330        TAD          TOPCH  /STORE CHARACTER                     /INT 593
1270  3000  S,    DCA          0      /VARIABLE ADDRESS                    /INT 594
1271  2326        ISZ          N      /N#N+1                               /INT 595
1272  1270        TAD          S      /S#MODF(S+1,16)                      /INT 596
1273  7001        IAC                                                      /INT 597
1274   321        AND          MASK                                        /INT 598
1275  3270        DCA          S                                           /INT 599
1276  1327        TAD          RDY    /TEST RDY                            /INT 600
1277  7650        SNA    CLA                                               /INT 601
1300  5305        JMP          RETN                                        /INT 602
1301  3725        DCA    I     LSAC   /SIMULATE INTERRUPT                  /INT 603
1302  1260        TAD          OPCH   /SET RETURN ADDRESS                  /INT 604
1303  3001        DCA          IRET                                        /INT 605
1304  5226        JMP          P                                           /INT 606
1305  6001  RETN, ION                 /RETURN                              /INT 607
1306  5660        JMP    I     OPCH                                        /INT 608
                                                                           /INT 609
            /INITIALIZE TELEPRINTER/PUNCH ROUTINE                          /INT 610
```

```
1307     0  INIP, 0                    /SUBROUTINE ENTRY                          /INT 611
1310  6042        TCF                  /TURN OFF PUNCH FLAG                       /INT 612
1311  7001        IAC                  /RDY#1                                     /INT 613
1312  3327        DCA          RDY                                                /INT 614
1313  3326        DCA          N       /N#0                                       /INT 615
1314  1323        TAD          CP      /INITIALIZE P                              /INT 616
1315  3226        DCA          P                                                  /INT 617
1316  1324        TAD          CS      /INITIALIZE S                              /INT 618
1317  3270        DCA          S                                                  /INT 619
1320  5707        JMP    I     INIP    /RETURN                                    /INT 620
1321  7757  MASK, 7757                 /MASK                                      /INT 621
1322  7760  MSXN, -20                  /-16                                       /INT 622
1323  1200  CP,   TAD          BUFF    /INITIAL P                                 /INT 623
1324  3200  CS,   DCA          BUFF    /INITIAL S                                 /INT 624
1325  2371  LSAC, SVAC                                                            /INT 625
1326     0  N,    0                    /NUMBER CHAR WAITING                       /INT 626
1327     0  RDY,  0                    /PUNCH READY INDICATOR                     /INT 627
1330     0  TOPCH,0                    /TEMPORARY                                 /INT 628
                                                                                  /INT 629
            /CK. CHECK POSITION AND PRINT INDICATORS                              /INT 630
1331  4735  PCHK,   JMS I LCHCK                                                   /INT 631
1332     1          1                                                             /INT 632
1333  5466          JMP I LOMGA                                                   /INT 633
1334  5466          JMP I LOMGA                                                   /INT 634
1335  1025  LCHCK,  CHECK                                                         /INT 635
                                                                                  /INT 636
            /PA. PRINT CURRENT SHAFT POSITIONS - 2THETA, OMEGA, CHI, PHI.         /INT 637
1336  4545  ANGPRT, JMS I LWHERE        /SET FLOATING POINT ANGLES TO CURRENT POSIT/INT 638
1337  4427          JMS I LFOP          /PRINT ANGLES                             /INT 639
1340  7774          -4                                                            /INT 640
1341   624          TTH                                                           /INT 641
1342  4565          JMS I LCRLF         /PUT OUT CARRIAGE RETURN, LINE FEED.      /INT 642
1343  5466          JMP I LOMGA                                                   /INT 643
                                                                                  /INT 644
            *1363                                                                 /INT 645
            /MAIN PROGRAM SUBROUTINE TO MODIFY CONTROL REGISTER                   /INT 646
1363     0  DCR,    0                                                             /INT 647
1364  3376          DCA TDCR            /SAVE ARGUMENT                            /INT 648
1365  6002          IOF                 /TURN OFF INTERRUPTS                      /INT 649
1366  1777          TAD I ASTOUT        /MASK STOUT WITH ARGUMENT                 /INT 650
1367   763          AND I DCR                                                     /INT 651
1370  1376          TAD TDCR            /ADD SAVED ARGUMENT                       /INT 652
1371  6356          6356                /COPY AC TO CONTROL REGISTER              /INT 653
1372  3777          DCA I ASTOUT        /SAVE REGISTER CONTENTS IN STOUT          /INT 654
1373  6001          ION                 /ENABLE INTERRUPTS                        /INT 655
1374  2363          ISZ DCR             /RETURN                                   /INT 656
1375  5763          JMP I DCR                                                     /INT 657
1376     0  TDCR,   0                                                             /INT 658
1377  2675  ASTOUT, STOUT                                                         /INT 659
                                                                                  /INT 660
            *1400                                                                 /INT 661
            /2THETA MOTOR DRIVE CLOCK INTERRUPT                                   /INT 662
1400  1276  TMDR,   TAD MIT             /TEST MOTOR INDICATOR                     /INT 663
1401  7650          SNA CLA                                                       /INT 664
1402  5277          JMP OMDR            /JUMP TO OMEGA MOTOR DRIVE IF OFF.        /INT 665
1403  2463          ISZ I LMI           /IF ON,SET OVERALL MOTOR INDICATOR        /INT 666
1404  2270          ISZ KT1             /INCREMENT AND TEST SLOW START COUNTER    /INT 667
1405  5277          JMP OMDR            /GO TO NEXT MOTOR IF NOT ZERO.            /INT 668
1406  2271          ISZ KT2             /RESET SLOW START COUNTER                 /INT 669
1407  5212          JMP TMDR1                                                     /INT 670
1410  7240          CLA CMA             /KT2#-1                                   /INT 671
1411  3271          DCA KT2                                                       /INT 672
1412  1271  TMDR1,  TAD KT2             /KT1#KT2                                  /INT 673
1413  3270          DCA KT1                                                       /INT 674
1414  1272          TAD DT              /COMPARE CURRENT AND DESIRED POSITIONS    /INT 675
1415  1274          TAD DST                                                       /INT 676
1416  7440          SZA                                                           /INT 677
1417  5240          JMP TMDR3                                                     /INT 678
1420  1273          TAD HT                                                        /INT 679
1421  1275          TAD HST                                                       /INT 680
1422  7440          SZA                                                           /INT 681
1423  5240          JMP TMDR3                                                     /INT 682
1424  2267          ISZ OVRT            /ANGLES EQUAL.  TEST OVERSHOOT INDICATOR. /INT 683
1425  5236          JMP TMDR2                                                     /INT 684
1426  7240          CLA CMA             /OVERSHOOT.  RESET DESIRED DEGREE POSITION./INT 685
1427  1274          TAD DST                                                       /INT 686
1430  3274          DCA DST                                                       /INT 687
1431  1157          TAD SSK1            /SET SLOW START                           /INT 688
1432  3270          DCA KT1                                                       /INT 689
1433  1160          TAD SSK2                                                      /INT 690
1434  3271          DCA KT2                                                       /INT 691
```

```
1435  5277          JMP OMDR          /JUMP TO OMEGA MOTOR DRIVE.                  /INT 692
1436  3276  TMDR2,  DCA MIT           /NOT OVERSHOOT  TURN OFF MOTOR INDICATOR.    /INT 693
1437  5277          JMP OMDR          /JUMP TO OMEGA MOTOR DRIVE                   /INT 694
1440  7700  TMDR3,  SMA CLA                                                        /INT 695
1441  5254          JMP TMDR4                                                      /INT 696
1442  6322          6322              /PULSE MOTOR FORWARD                         /INT 697
1443  2273          ISZ HT            /INCREMENT CURRENT 200THS POSITION           /INT 698
1444  1273          TAD HT            /IS IT LESS THAN 200                         /INT 699
1445  1163          TAD MTWH                                                       /INT 700
1446  7710          SPA CLA                                                        /INT 701
1447  5277          JMP OMDR          /YES.  JUMP TO OMEGA MOTOR DRIVE             /INT 702
1450  2272          ISZ DT            /NO.  INCREMENT CURRENT DEGREE POSITION      /INT 703
1451  7000          NOP                                                            /INT 704
1452  3273          DCA HT            /SET CURRENT 200THS POSITION TO ZERO.        /INT 705
1453  5277          JMP OMDR          /JUMP TO OMEGA MOTOR DRIVE                   /INT 706
1454  6321  TMDR4,  6321              /PULSE MOTOR BACKWARD                        /INT 707
1455  7240          CLA CMA           /SUBTRACT 1 FROM CURRENT 200THS POSITION     /INT 708
1456  1273          TAD HT                                                         /INT 709
1457  7500          SMA               /IS IT LESS THAN ZERO                        /INT 710
1460  5264          JMP TMDR5         /NO.  HT#HT-1                                /INT 711
1461  1272          TAD DT            /YES.  SUBTRACT 1 FROM CURRENT DEGREE POSIT/INT 712
1462  3272          DCA DT                                                         /INT 713
1463  1164          TAD K199          /SET CURRENT 200THS POSITION TO 199.         /INT 714
1464  3273  TMDR5,  DCA HT                                                         /INT 715
1465  5277          JMP OMDR          /JUMP TO OMEGA MOTOR DRIVE                   /INT 716
1466   624  LTTH,   TTH                                                            /INT 717
1467     0  OVRT,   0                                                              /INT 718
1470     0  KT1,    0                                                              /INT 719
1471     0  KT2,    0                                                              /INT 720
1472     0  DT,     0                                                              /INT 721
1473     0  HT,     0                                                              /INT 722
1474     0  DST,    0                                                              /INT 723
1475     0  HST,    0                                                              /INT 724
1476     0  MIT,    0                                                              /INT 725
                                                                                   /INT 726
            /OMEGA MOTOR DRIVE CLOCK INTERRUPT                                     /INT 727
1477  1375  OMDR,   TAD MIO           /TEST MOTOR INDICATOR.                       /INT 728
1500  7650          SNA CLA                                                        /INT 729
1501  5776          JMP I LCMDR       /JUMP TO CHI MOTOR DRIVE IF OFF.             /INT 730
1502  2463          ISZ I LMI         /IF ON, SET OVERALL MOTOR INDICATOR.         /INT 731
1503  2367          ISZ KO1           /TEST SLOW START COUNTER.                    /INT 732
1504  5776          JMP I LCMDR       /GO TO CHI MOTOR IF NOT ZERO.                /INT 733
1505  2370          ISZ KO2           /RESET SLOW START COUNTER.                   /INT 734
1506  5311          JMP OMDR1                                                      /INT 735
1507  7240          CLA CMA           /KO2#-1.                                     /INT 736
1510  3370          DCA KO2                                                        /INT 737
1511  1370  OMDR1,  TAD KO2           /KO1#KO2.                                    /INT 738
1512  3367          DCA KO1                                                        /INT 739
1513  1371          TAD DO            /COMPARE CURRENT AND DESIRED POSITIONS.      /INT 740
1514  1373          TAD DSO                                                        /INT 741
1515  7440          SZA                                                            /INT 742
1516  5337          JMP OMDR3                                                      /INT 743
1517  1372          TAD HO                                                         /INT 744
1520  1374          TAD HSO                                                        /INT 745
1521  7440          SZA                                                            /INT 746
1522  5337          JMP OMDR3                                                      /INT 747
1523  2366          ISZ OVRO          /ANGLES EQUAL. TEST OVERSHOOT INDICATOR.     /INT 748
1524  5335          JMP OMDR2                                                      /INT 749
1525  7240          CLA CMA           /OVERSHOOT. RESET DESIRED DEGREE POSITION.   /INT 750
1526  1373          TAD DSO                                                        /INT 751
1527  3373          DCA DSO                                                        /INT 752
1530  1157          TAD SSK1          /SET SLOW START.                             /INT 753
1531  3367          DCA KO1                                                        /INT 754
1532  1160          TAD SSK2                                                       /INT 755
1533  3370          DCA KO2                                                        /INT 756
1534  5776          JMP I LCMDR       /JUMP TO CHI MOTOR DRIVE                     /INT 757
1535  3375  OMDR2,  DCA MIO           /NOT OVERSHOOT. TURN OFF MOTOR INDICATOR.    /INT 758
1536  5776          JMP I LCMDR       /GO TO CHI.                                  /INT 759
1537  7700  OMDR3,  SMA CLA                                                        /INT 760
1540  5353          JMP OMDR4                                                      /INT 761
1541  6324          6324              /PULSE MOTOR FORWARD.                        /INT 762
1542  2372          ISZ HO            /INCREMENT CURRENT 200THS POSITION.          /INT 763
1543  1372          TAD HO            /IS IT LESS THAN 200.                        /INT 764
1544  1163          TAD MTWH                                                       /INT 765
1545  7710          SPA CLA                                                        /INT 766
1546  5776          JMP I LCMDR       /YES. GO TO CHI.                             /INT 767
1547  2371          ISZ DO            /NO. INCREMENT CURRENT DEGREE POSITION.      /INT 768
1550  7000          NOP                                                            /INT 769
1551  3372          DCA HO            /SET CURRENT 200THS POSITION TO ZERO.        /INT 770
1552  5776          JMP I LCMDR       /GO TO CHI.                                  /INT 771
1553  6331  OMDR4,  6331              /PULSE MOTOR BACKWARD.                       /INT 772
```

```
1554  7240          CLA CMA          /SUBTRACT 1 FROM CURRENT 200THS POSITION.  /INT 773
1555  1372          TAD HO                                                      /INT 774
1556  7500          SMA              /IS IT LESS THAN ZERO.                     /INT 775
1557  5363          JMP OMDR5        /NO. HO#HO-1.                              /INT 776
1560  1371          TAD DO           /YES. DO#DO-1.                             /INT 777
1561  3371          DCA DO                                                      /INT 778
1562  1164          TAD K199         /HO#199.                                   /INT 779
1563  3372  OMDR5,  DCA HO                                                      /INT 780
1564  5776          JMP I LCMDR      /GO TO CHI.                                /INT 781
1565   627  LOMG,   OMG                                                         /INT 782
1566     0  OVRO,   0                                                           /INT 783
1567     0  KO1,    0                                                           /INT 784
1570     0  KO2,    0                                                           /INT 785
1571     0  DO,     0                                                           /INT 786
1572     0  HO,     0                                                           /INT 787
1573     0  DSO,    0                                                           /INT 788
1574     0  HSO,    0                                                           /INT 789
1575     0  MIO,    0                                                           /INT 790
1576  1600  LCMDR,  CMDR                                                        /INT 791
                                                                                /INT 792
            *1600                                                               /INT 793
            /CHI MOTOR DRIVE CLOCK INTERRUPT                                    /INT 794
1600  1276  CMDR,   TAD MIC          /TEST MOTOR INDICATOR.                     /INT 795
1601  7650          SNA CLA                                                     /INT 796
1602  5277          JMP PMDR         /GO TO PHI MOTOR DRIVE IF OFF.             /INT 797
1603  2463          ISZ I LMI        /IF ON, SET OVERALL MOTOR INDICATOR.       /INT 798
1604  2270          ISZ KC1          /TEST SLOW START COUNTER.                  /INT 799
1605  5277          JMP PMDR         /GO TO PHI IF NOT ZERO.                    /INT 800
1606  2271          ISZ KC2          /RESET SLOW START COUNTER.                 /INT 801
1607  5212          JMP CMDR1                                                   /INT 802
1610  7240          CLA CMA          /KC2#-1.                                   /INT 803
1611  3271          DCA KC2                                                     /INT 804
1612  1271  CMDR1,  TAD KC2          /KC1#KC2.                                  /INT 805
1613  3270          DCA KC1                                                     /INT 806
1614  1272          TAD DC           /COMPARE CURRENT AND DESIRED POSITIONS.    /INT 807
1615  1274          TAD DSC                                                     /INT 808
1616  7440          SZA                                                         /INT 809
1617  5240          JMP CMDR3                                                   /INT 810
1620  1273          TAD HC                                                      /INT 811
1621  1275          TAD HSC                                                     /INT 812
1622  7440          SZA                                                         /INT 813
1623  5240          JMP CMDR3                                                   /INT 814
1624  2267          ISZ OVRC         /ANGLES EQUAL. TEST OVERSHOOT INDICATOR.   /INT 815
1625  5236          JMP CMDR2                                                   /INT 816
1626  7240          CLA CMA          /OVERSHOOT. RESET DESIRED DEGREE POSITION. /INT 817
1627  1274          TAD DSC                                                     /INT 818
1630  3274          DCA DSC                                                     /INT 819
1631  1157          TAD SSK1         /SET SLOW START.                           /INT 820
1632  3270          DCA KC1                                                     /INT 821
1633  1160          TAD SSK2                                                    /INT 822
1634  3271          DCA KC2                                                     /INT 823
1635  5277          JMP PMDR         /GO TO PHI.                                /INT 824
1636  3276  CMDR2,  DCA MIC          /NOT OVERSHOOT. TURN OFF MOTOR INDICATOR.  /INT 825
1637  5277          JMP PMDR         /GO TO PHI.                                /INT 826
1640  7700  CMDR3,  SMA CLA                                                     /INT 827
1641  5254          JMP CMDR4                                                   /INT 828
1642  6334          6334             /PULSE MOTOR FORWARD.                      /INT 829
1643  2273          ISZ HC           /INCREMENT CURRENT 200THS POSITION.        /INT 830
1644  1273          TAD HC           /IS IT LESS THAN 200.                      /INT 831
1645  1163          TAD MTWH                                                    /INT 832
1646  7710          SPA CLA                                                     /INT 833
1647  5277          JMP PMDR         /YES. GO TO PHI.                           /INT 834
1650  2272          ISZ DC           /NO. INCREMENT CURRENT DEGREE POSITION.    /INT 835
1651  7000          NOP                                                         /INT 836
1652  3273          DCA HC           /SET  CURRENT 200THS POSITION TO ZERO.     /INT 837
1653  5277          JMP PMDR         /GO TO PHI.                                /INT 838
1654  6332  CMDR4,  6332             /PULSE MOTOR BACKWARD.                     /INT 839
1655  7240          CLA CMA          /SUBTRACT 1 FROM CURRENT 200THS POSITION.  /INT 840
1656  1273          TAD HC                                                      /INT 841
1657  7500          SMA              /IS IT LESS THAN ZERO.                     /INT 842
1660  5264          JMP CMDR5        /NO. HC#HC-1.                              /INT 843
1661  1272          TAD DC           /YES. DC#DC-1.                             /INT 844
1662  3272          DCA DC                                                      /INT 845
1663  1164          TAD K199         /HC#199.                                   /INT 846
1664  3273  CMDR5,  DCA HC                                                      /INT 847
1665  5277          JMP PMDR         /GO TO CHI.                                /INT 848
1666   632  LCHI,   CHI                                                         /INT 849
1667     0  OVRC,   0                                                           /INT 850
1670     0  KC1,    0                                                           /INT 851
1671     0  KC2,    0                                                           /INT 852
1672     0  DC,     0                                                           /INT 853
```

```
1673     0  HC,      0                                                    /INT 854
1674     0  DSC,     0                                                    /INT 855
1675     0  HSC,     0                                                    /INT 856
1676     0  MIC,     0                                                    /INT 857
                                                                          /INT 858
            /PHI MOTOR DRIVE CLOCK INTERRUPT                              /INT 859
1677  1375  PMDR,    TAD MIP            /TEST MOTOR INDICATOR.            /INT 860
1700  7650           SNA CLA                                              /INT 861
1701  5776           JMP I LRTN         /RETURN TO CLOCK INTERRUPT.       /INT 862
1702  2463           ISZ I LMI          /SET OVERALL MOTOR INDICATOR.     /INT 863
1703  2367           ISZ KP1            /TEST SLOW START COUNTER.         /INT 864
1704  5776           JMP I LRTN         /RETURN.                          /INT 865
1705  2370           ISZ KP2            /RESET SLOW START COUNTER.        /INT 866
1706  5311           JMP PMDR1                                            /INT 867
1707  7240           CLA CMA            /KP2#-1.                          /INT 868
1710  3370           DCA KP2                                              /INT 869
1711  1370  PMDR1,   TAD KP2            /KP1#KP2.                         /INT 870
1712  3367           DCA KP1                                              /INT 871
1713  1371           TAD DP             /COMPARE CURRENT AND DESIRED LOCATIONS.  /INT 872
1714  1373           TAD DSP                                              /INT 873
1715  7440           SZA                                                  /INT 874
1716  5337           JMP PMDR3                                            /INT 875
1717  1372           TAD HP                                               /INT 876
1720  1374           TAD HSP                                              /INT 877
1721  7440           SZA                                                  /INT 878
1722  5337           JMP PMDR3                                            /INT 879
1723  2366           ISZ OVRP           /ANGLES EQUAL. TEST OVERSHOOT INDICATOR.  /INT 880
1724  5335           JMP PMDR2                                            /INT 881
1725  7240           CLA CMA            /OVERSHOOT. RESET DESIRED DEGREE POSITION.  /INT 882
1726  1373           TAD DSP                                              /INT 883
1727  3373           DCA DSP                                              /INT 884
1730  1157           TAD SSK1                                             /INT 885
1731  3367           DCA KP1            /SET SLOW START.                  /INT 886
1732  1160           TAD SSK2                                             /INT 887
1733  3370           DCA KP2                                              /INT 888
1734  5776           JMP I LRTN         /RETURN.                          /INT 889
1735  3375  PMDR2,   DCA MIP            /NOT OVERSHOOT. TURN OFF MOTOR INDICATOR.  /INT 890
1736  5776           JMP I LRTN         /RETURN.                          /INT 891
1737  7700  PMDR3,   SMA CLA                                              /INT 892
1740  5353           JMP PMDR4                                            /INT 893
1741  6341           6341               /PULSE MOTOR FORWARD.             /INT 894
1742  2372           ISZ HP             /INCREMENT CURRENT 200THS POSITION.  /INT 895
1743  1372           TAD HP             /IS IT LESS THAN 200.             /INT 896
1744  1163           TAD MTWH                                             /INT 897
1745  7710           SPA CLA                                              /INT 898
1746  5776           JMP I LRTN         /YES. RETURN.                     /INT 899
1747  2371           ISZ DP             /NO. INCREMENT CURRENT DEGREE POSITION.  /INT 900
1750  7000           NOP                                                  /INT 901
1751  3372           DCA HP             /SET CURRENT 200THS POSITION TO ZERO.  /INT 902
1752  5776           JMP I LRTN         /RETURN.                          /INT 903
1753  6342  PMDR4,   6342               /PULSE MOTOR BACKWARD.            /INT 904
1754  7240           CLA CMA            /SUBTRACT 1 FROM CURRENT 200THS POSITION.  /INT 905
1755  1372           TAD HP                                               /INT 906
1756  7500           SMA                /IS IT LESS THAN ZERO.            /INT 907
1757  5363           JMP PMDR5          /NO. HP#HP-1.                     /INT 908
1760  1371           TAD DP             /YES. DP#DP-1.                    /INT 909
1761  3371           DCA DP                                               /INT 910
1762  1164           TAD K199           /HP#199.                          /INT 911
1763  3372  PMDR5,   DCA HP                                               /INT 912
1764  5776           JMP I LRTN         /RETURN.                          /INT 913
1765   635  LPHI,    PHI                                                  /INT 914
1766     0  OVRP,    0                                                    /INT 915
1767     0  KP1,     0                                                    /INT 916
1770     0  KP2,     0                                                    /INT 917
1771     0  DP,      0                                                    /INT 918
1772     0  HP,      0                                                    /INT 919
1773     0  DSP,     0                                                    /INT 920
1774     0  HSP,     0                                                    /INT 921
1775     0  MIP,     0                                                    /INT 922
1776  2632  LRTN,    AUDIO                                                /INT 923
                                                                          /INT 924
            *2000                                                         /INT 925
            /KEYBOARD/READER INTERRUPT ROUTINE.                           /INT 926
2000  6036  KEYB,    KRB                /READ CHARACTER, CLEAR KEYBOARD FLAG.  /INT 927
2001  1301           TAD MSNT           /IS IT A SENTINEL.                /INT 928
2002  7650           SNA CLA                                              /INT 929
2003  5220           JMP SENT           /YES.                             /INT 930
2004  1304           TAD SGTK           /NO. TEST FOR SIGNAL EXPECTED.    /INT 931
2005  7640           SZA CLA                                              /INT 932
2006  5225           JMP SGNL           /EXPECTED.                        /INT 933
2007  1305           TAD KYEX           /TEST FOR CHARACTER EXPECTED.     /INT 934
```

```
2010  7650          SNA CLA                                                  /INT 935
2011  5465          JMP I LTSIN        /NOT EXPECTED. IGNORE.                /INT 936
2012  3305          DCA KYEX           /CLEAR CHARACTER EXPECTED INDICATOR.  /INT 937
2013  6036          KRB                /READ CHARACTER.                      /INT 938
2014   317          AND KYMSK          /SET BIT 4.                           /INT 939
2015  1320          TAD KYCNS                                                /INT 940
2016  6001          ION                /CAUSE MAIN PROGRAM JUMP.             /INT 941
2017  5721          JMP I IPCH                                               /INT 942
2020  1302  SENT,   TAD MSGT           /SET SIGNAL TIME LIMITER.             /INT 943
2021  3304          DCA SGTK                                                 /INT 944
2022  1155          TAD MTWO           /SET CHARACTER COUNTER.               /INT 945
2023  3306          DCA SCHK                                                 /INT 946
2024  5465          JMP I LTSIN        /TERMINATE INTERRUPT.                 /INT 947
2025  6036  SGNL,   KRB                /READ CHARACTER.                      /INT 948
2026   307          AND SMASK          /MASK OFF FIRST 6 BITS TO OBTAIN 6-BIT TRIM/INT 949
2027  2306          ISZ SCHK           /IS IT FIRST OR SECOND CHARACTER.     /INT 950
2030  5274          JMP FRST           /FIRST CHARACTER.                     /INT 951
2031  1310          TAD COMM           /SECOND CHARACTER, ADD FIRST.         /INT 952
2032  3310          DCA COMM                                                 /INT 953
2033  3304          DCA SGTK           /CLEAR SIGNAL EXPECTED INDICATOR.     /INT 954
2034  1316          TAD NLIST          /SET COUNTER TO SEARCH LIST.          /INT 955
2035  3311          DCA KLIST                                                /INT 956
2036  1315          TAD NINT           /SET COUNTER TO INDICATE INTERRUPT OR MAIN /INT 957
2037  3312          DCA KIND                                                 /INT 958
2040  1303          TAD LOCSGL         /SET ADDRESS FOR AUTO-INDEXING.       /INT 959
2041  3017          DCA TSGNL                                                /INT 960
2042  1417  SGNL1,  TAD I TSGNL        /PICK UP COMMAND FROM TABLE AND COMPARE WIT/INT 961
2043  7041          CIA                /COMMAND READ IN.                     /INT 962
2044  1310          TAD COMM                                                 /INT 963
2045  7650          SNA CLA                                                  /INT 964
2046  5255          JMP SGNL2          /COMMANDS ARE THE SAME.               /INT 965
2047  2017          ISZ TSGNL          /COMMANDS ARE NOT THE SAME. ADVANCE ADDRESS/INT 966
2050  2312          ISZ KIND           /ADVANCE COUNTERS.                    /INT 967
2051  7000          NOP                                                      /INT 968
2052  2311          ISZ KLIST                                                /INT 969
2053  5242          JMP SGNL1                                                /INT 970
2054  5465          JMP I LTSIN        /COMMAND NOT IN TABLE. TERMINATE INTERRUPT./INT 971
2055  1417  SGNL2,  TAD I TSGNL        /PICK UP ADDRESS FOR JUMP.            /INT 972
2056  3311          DCA JADR                                                 /INT 973
2057  1312          TAD KIND           /MAIN PROGRAM OR INTERRUPT.           /INT 974
2060  7710          SPA CLA                                                  /INT 975
2061  5711          JMP I JADR         /INTERRUPT                            /INT 976
2062  3077          DCA BLCK           /MAIN PROGRAM. CLEAR BLOCK INDICATOR. /INT 977
2063  3305          DCA KYEX           /CLEAR CHARACTER EXPECTED INDICATOR.  /INT 978
2064  6001          ION                /ENABLE INTERRUPTS.                   /INT 979
2065  4565          JMS I LCRLF        /PRINT SIGNAL.                        /INT 980
2066  1313          TAD SLASH                                                /INT 981
2067  4470          JMS I LOPCH                                              /INT 982
2070  1310          TAD COMM                                                 /INT 983
2071  4714          JMS I LTY2                                               /INT 984
2072  4565          JMS I LCRLF                                              /INT 985
2073  5711          JMP I JADR         /JUMP.                                /INT 986
2074  7106  FRST,   CLL RTL            /FIRST CHARACTER. ROTATE 6-BIT TRIMMED CODE/INT 987
2075  7006          RTL                /FIRST 6 BITS AND SAVE RESULT.        /INT 988
2076  7006          RTL                                                      /INT 989
2077  3310          DCA COMM                                                 /INT 990
2100  5465          JMP I LTSIN        /TERMINATE INTERRUPT.                 /INT 991
2101  7521  MSNT,   -257               /MINUS SENTINEL SLASH.                /INT 992
2102  7634  MSGT,   -144               /CONSTANT FOR TIME LIMIT.             /INT 993
2103  2142  LOCSGL, SGLTAB-1           /ADDRESS FOR USE OF AUTO-INDEXING     /INT 994
2104     0  SGTK,   0                                                        /INT 995
2105     0  KYEX,   0                                                        /INT 996
2106     0  SCHK,   0                                                        /INT 997
2107    77  SMASK,  0077                                                     /INT 998
2110     0  COMM,   0                                                        /INT 999
2111     0  KLIST, JADR, 0                                                   /INTI000
2112     0  KIND,   0                                                        /INTI001
2113   257  SLASH,  257                                                      /INTI002
2114  7544  LTY2,   7544                                                     /INTI003
2115  7771  NINT,   -7                                                       /INTI004
2116  7756  NLIST,  -22                                                      /INTI005
2117  7577  KYMSK,  7577                                                     /INTI006
2120   200  KYCNS,  0200                                                     /INTI007
                                                                            /INTI008
2121     0  IPCH, 0                 /SUBROUTINE ENTRY                       /INTI009
2122  7001        IAC                /KYEX#1                                 /INTI010
2123  3305        DCA        KYEX                                           /INTI011
2124  6004        6004               /START READER                           /INTI012
2125  1326        TAD        .+1     /DISPLAY 7000 IN AC                     /INTI013
2126  7000        NOP                /WAITING LOOP                           /INTI014
2127  5326        JMP        .-1                                            /INTI015
```

```
                                                                                /INTI016
            /INITIALIZE KEYBOARD/READER ROUTINES                                /INTI017
2130     0  INIK, 0                  /SUBROUTINE ENTRY                          /INTI018
2131  6032        KCC                /CLEAR KEYBOARD FLAG                       /INTI019
2132  3304        DCA          SGTK  /CLEAR SIGNAL TIMER                        /INTI020
2133  3305        DCA          KYEX  /CLEAR CHAR EXPECTED                       /INTI021
2134  5730        JMP    I     INIK  /RETURN                                    /INTI022
                                                                                /INTI023
            /TIME LIMITER ROUTINE FOR KEYBOARD SIGNAL                           /INTI024
2135     0  SGTM, 0                  /ENTRY FROM 1/10 SEC CLOCK                 /INTI025
2136  1304        TAD          SGTK  /TEST SIGNAL TIMER                         /INTI026
2137  7640        SZA    CLA                                                    /INTI027
2140  2304        ISZ          SGTK  /ADVANCE SIGNAL TIMER                      /INTI028
2141  5735        JMP    I     SGTM  /RETURN                                    /INTI029
2142  5735        JMP    I     SGTM  /RETURN                                    /INTI030
            /TWO-CHARACTER KEYBOARD SIGNAL TABLE                                /INTI031
            /INTERRUPT JUMPS                                                    /INTI032
2143  4040  SGLTAB, 4040                /SPACE-SPACE. KILL CURRENT PROGRAM, REINITI/INTI033
2144   200          INWT                                                        /INTI034
2145     0          0000                                                        /INTI035
2146  2373          TSIN                                                        /INTI036
2147     0          0000                                                        /INTI037
2150  2373          TSIN                                                        /INTI038
2151     0          0000                                                        /INTI039
2152  2373          TSIN                                                        /INTI040
2153     0          0000                                                        /INTI041
2154  2373          TSIN                                                        /INTI042
2155     0          0000                                                        /INTI043
2156  2373          TSIN                                                        /INTI044
2157     0          0000                                                        /INTI045
2160  2373          TSIN                                                        /INTI046
            /MAIN PROGRAM JUMPS                                                 /INTI047
2161  1706          1706                /OF. STOP CURRENT PROGRAM, RETURN TO WAITIN/INTI048
2162   210          OMGA                                                        /INTI049
2163  2001          2001                /PA. PRINT ALL CURRENT SHAFT POSITIONS.  /INTI050
2164  1336          ANGPRT                                                      /INTI051
2165   313          0313                /CK. DRIVE ALL SHAFTS AND CHECK POSITIONS. /INTI052
2166  1331          PCHK                                                        /INTI053
2167  1124          1124                /IT. READ IN DIAL SETTING OF 2THETA.     /INTI054
2170   560          TINIT                                                       /INTI055
2171  1117          1117                /IO. READ IN DIAL SETTING OF OMEGA.      /INTI056
2172   562          OINIT                                                       /INTI057
2173  1103          1103                /IC. READ IN DIAL SETTING OF CHI.        /INTI058
2174   564          CINIT                                                       /INTI059
2175  1120          1120                /IP. READ IN DIAL SETTING OF PHI.        /INTI060
2176   566          PINIT                                                       /INTI061
2177  2431          2431                /TY. ALLOW BUT IGNORE TYPING.            /INTI062
2200  1174          TYPE                                                        /INTI063
2201  2310          2310                /SH. SHUTTER CONTROL                     /INTI064
2202  2467          SHUT                                                        /INTI065
2203   614          0614                /FL. FILTER CONTROL                      /INTI066
2204  2464          FILTER                                                      /INTI067
2205   124          0124                /AT. ATTENUATOR CONTROL                  /INTI068
2206  2472          ATT                                                         /INTI069
                                                                                /INTI070
                                                                                /INTI071
            /SORT OUT INTERRUPTS                                                /INTI072
                                                                                /INTI073
            SWT1#200                                                            /INTI074
            SWT2#200                                                            /INTI075
            SWT3#200                                                            /INTI076
            SWT4#2364                                                           /INTI077
            SWT5#2364                                                           /INTI078
            SWT6#200                                                            /INTI079
            SWT7#200                                                            /INTI080
                                                                                /INTI081
            *2306                                                               /INTI082
2306  3371  INT,  DCA          SVAC  /SAVE AC AND LINK                          /INTI083
2307  7204        CLA    RAL                                                    /INTI084
2310  3372        DCA          SVLK                                             /INTI085
2311  6312        6312                /SKIP IF NOT CLOCK                       /INTI086
2312  5765        JMP    I     LCLK                                             /INTI087
2313  6302        6302                /SKIP IF NOT STATUS REG                  /INTI088
2314  5323        JMP          STAT                                             /INTI089
2315  6041        TSF                 /SKIP IF TELEPRINTER                     /INTI090
2316  7410        SKP                                                          /INTI091
2317  5766        JMP    I     LTEL                                             /INTI092
2320  6031        KSF                 /SKIP IF KEYBOARD                        /INTI093
2321  7402        HLT                 /ERROR. NO FLAG FOUND                    /INTI094
2322  5767        JMP    I     LKEY                                             /INTI095
2323  1347  STAT, TAD          MTWV  /SET COUNTER FOR TEST                      /INTI096
```

```
2324  3370          OCA          STAK  /   OF STATUS REGISTER                          /INTI097
2325  1346          TAD          JMPC  /INITIALIZE JUMP COMMAND                       /INTI098
2326  3345          OCA          JMPE                                                 /INTI099
2327  6301          6301               /READ STATUS REGISTER                           /INTI100
2330  7004   TEST,  RAL                /TEST STATUS BITS IN SEQUENCE                   /INTI101
2331  7430          SZL                                                                /INTI102
2332  5337          JMP          CLST  /FOUND FIRST ONE BIT                           /INTI103
2333  2345          ISZ          JMPE  /ADVANCE JUMP COMMAND                          /INTI104
2334  2370          ISZ          STAK  /TEST COUNTER                                  /INTI105
2335  5330          JMP          TEST                                                 /INTI106
2336  7402          HLT                /NO STATUS FLAG FOUND                           /INTI107
2337  7200   CLST,  CLA                /PREPARE TO CLEAR ONE FLAG                      /INTI108
2340  7004          RAL                                                                /INTI109
2341  2370          ISZ          STAK                                                 /INTI110
2342  5340          JMP          .-2                                                  /INTI111
2343  6304          6304               /CLEAR ONE STATUS FLAG                          /INTI112
2344  7200          CLA                                                                /INTI113
2345     0   JMPE,  0                  /EXECUTE VARIABLE JUMP COMMAND                  /INTI114
2346  5750   JMPC,  JMP    I     STAB  /INITIAL JUMP COMMAND                           /INTI115
2347  7764   MTWV,  0-14               /MINUS TWELVE                                   /INTI116
2350  1000   STAB,  MRKT               /JUMP TABLE FOR STATUS REG                      /INTI117
2351  1005          MRKO                                                               /INTI118
2352  1012          MRKC                                                               /INTI119
2353  1017          MRKP                                                               /INTI120
2354   200          SWT1                                                               /INTI121
2355   200          SWT2                                                               /INTI122
2356   200          SWT3                                                               /INTI123
2357  2364          SWT4                                                               /INTI124
2360  2364          SWT5                                                               /INTI125
2361   200          SWT6                                                               /INTI126
2362   200          SWT7                                                               /INTI127
2363  2364          SPAR                                                               /INTI128
2364  7402   SPAR,  HLT                /INTERRUPT CAUSED BY SPARE                      /INTI129
2365  2601   LCLK,  CLCK               /INDIRECT ADDRESSES                             /INTI130
2366  1220   LTEL,  TELE                                                               /INTI131
2367  2000   LKEY,  KEYB                                                               /INTI132
2370     0   STAK,  0                  /COUNTER                                        /INTI133
2371     0   SVAC,  0                  /ACCUMULATOR SAVED HERE                         /INTI134
2372     0   SVLK,  0                  /LINK SAVED HERE                                /INTI135
                                                                                       /INTI136
             /RETURN FROM INTERRUPT PROGRAM                                            /INTI137
2373  1372   TSIN,  TAD          SVLK  /RESTORE AC AND LINK                            /INTI138
2374  7110          CLL    RAR                                                         /INTI139
2375  1371          TAD          SVAC                                                 /INTI140
2376  6001          ION                /TERMINATE INTERRUPT                            /INTI141
2377  5401          JMP    I     IRET                                                 /INTI142
                                                                                       /INTI143
             *2400                                                                     /INTI144
             /CHART RECORD COUNT.                                                      /INTI145
             VFOUT#7200                                                                /INTI146
2400     0   REC,     0                                                               /INTI147
2401  4407          JMS I LFPT                                                         /INTI148
2402  5170          FGET COUNT          /MULTIPLY COUNT BY SCALE FACTOR.               /INTI149
2403  3226          FMPY FACTOR         /MULTIPLY BY SCALE FACTOR.                     /INTI150
2404  6222          FPUT PULSE                                                         /INTI151
2405  2233          FSUB FP500          /IS SCALED COUNT GREATER THAN FULL SCALE.      /INTI152
2406     0          FEXT                                                               /INTI153
2407  1045          TAD HORD                                                           /INTI154
2410  7750          SPA SNA CLA                                                        /INTI155
2411  5215          JMP REC2                                                           /INTI156
2412  1231          TAD C500            /YES. SET COUNT TO FULL SCALE                  /INTI157
2413  4632   REC1,  JMS I LCREC                                                        /INTI158
2414  5600          JMP I REC                                                          /INTI159
2415  4407   REC2,  JMS I LFPT          /NO. TRUNCATE TO INTEGER.                      /INTI160
2416  5222          FGET PULSE                                                         /INTI161
2417     0          FEXT                                                               /INTI162
2420  4434          JMS I LFIX                                                         /INTI163
2421  5213          JMP REC1                                                           /INTI164
2422     0   PULSE, 0                                                                 /INTI165
2423     0          0                                                                  /INTI166
2424     0          0                                                                  /INTI167
2425  7200   LVFOUT, VFOUT                                                             /INTI168
2426     0   FACTOR, 0                                                                /INTI169
2427     0          0                                                                  /INTI170
2430     0          0                                                                  /INTI171
2431  1646   C500,  1646               /FULL SCALE. 934(10)                            /INTI172
2432  1146   LCREC, CREC                                                              /INTI173
2433    12   FP500, 0012               /FLOATING FULL SCALE. 934(10)                   /INTI174
2434  3514          3514                                                               /INTI175
2435     0          0000                                                               /INTI176
                                                                                       /INTI177
```

```
            /SUBROUTINE TO CONTROL FILTERS                                  /INT1178
2436     0  FLTR,    0                                                     /INT1179
2437   154          AND THR              /MASK OFF IRRELEVANT BITS         /INT1180
2440  7106          CLL RTL              /SHIFT                            /INT1181
2441  7004          RAL                                                    /INT1182
2442  4645          JMS I LDCR           /SET CONTROL REGISTER             /INT1183
2443  7747          7747                                                   /INT1184
2444  5636          JMP I FLTR                                             /INT1185
2445  1363  LDCR,   DCR                                                    /INT1186
                                                                           /INT1187
            /SUBROUTINE TO OPEN OR CLOSE SHUTTER                           /INT1188
2446     0  SHUTR,  0                                                     /INT1189
2447   146          AND ONE              /MASK OFF IRRELEVANT BITS         /INT1190
2450  7106          CLL RTL              /SHIFT                            /INT1191
2451  7006          RTL                                                    /INT1192
2452  7004          RAL                                                    /INT1193
2453  4645          JMS I LDCR           /SET CONTROL REGISTER             /INT1194
2454  7737          7737                                                   /INT1195
2455  5646          JMP I SHUTR                                            /INT1196
                                                                           /INT1197
            /SUBROUTINE TO SET UP ATTENUATORS                              /INT1198
2456     0  ATTEN,  0                                                     /INT1199
2457   263          AND ATMSK            /MASK OFF IRRELEVANT BITS         /INT1200
2460  4645          JMS I LDCR           /SET CONTROL REGISTER             /INT1201
2461  7770          7770                                                   /INT1202
2462  5656          JMP I ATTEN                                            /INT1203
2463     7  ATMSK,  0007                                                  /INT1204
                                                                           /INT1205
            /FL. SET FILTERS.                                              /INT1206
2464  4473  FILTER, JMS I LINTIN                                           /INT1207
2465  4236          JMS FLTR                                               /INT1208
2466  5466          JMP I LOMGA                                            /INT1209
                                                                           /INT1210
            /SH. OPEN OR CLOSE SHUTTER.                                    /INT1211
2467  4473  SHUT,   JMS I LINTIN                                           /INT1212
2470  4246          JMS SHUTR                                              /INT1213
2471  5466          JMP I LOMGA                                            /INT1214
                                                                           /INT1215
            /AT. SET ATTENUATORS.                                          /INT1216
2472  4473  ATT,    JMS I LINTIN                                           /INT1217
2473  4256          JMS ATTEN                                              /INT1218
2474  5466          JMP I LOMGA                                            /INT1219
                                                                           /INT1220
            /SUBROUTINE TO SET FLOATING POINT ANGLE LOCATIONS TO CURRENT POSITIONS. /INT1221
2475     0  WHERE,  0                                                     /INT1222
2476  4303          JMS SUB                                                /INT1223
2477  1472          DT                                                     /INT1224
2500  1571          DO                                                     /INT1225
2501  1672          DC                                                     /INT1226
2502  1771          DP                                                     /INT1227
2503     0  SUB,    0                                                     /INT1228
2504  1143          TAD MIN4             /SET COUNTER.                     /INT1229
2505  3336          DCA SUBK                                               /INT1230
2506  1703  SUBI,   TAD I SUB            /GET ADDRESS OF PRESENT DEGREE POSITION.  /INT1231
2507  3337          DCA SUBTM                                              /INT1232
2510  1737          TAD I SUBTM          /PICK UP PRESENT DEGREE POSITION. /INT1233
2511  4471          JMS I LFLT           /CONVERT TO FLOATING POINT AND SAVE. /INT1234
2512  4407          JMS I LFPT                                             /INT1235
2513  6340          FPUT SUBFT                                             /INT1236
2514     0          FEXT                                                   /INT1237
2515  2337          ISZ SUBTM            /ADVANCE TO ADDRESS OF PRESENT 200THS SETTI/INT1238
2516  1737          TAD I SUBTM          /PICK UP PRESENT 200THS SETTING.  /INT1239
2517  4471          JMS I LFLT           /CONVERT TO FLOATING POINT.       /INT1240
2520  1337          TAD SUBTM            /PICK UP ADDRESS OF FLOATING POINT ANGLE. /INT1241
2521  1343          TAD MIN5                                               /INT1242
2522  3337          DCA SUBTM                                              /INT1243
2523  1737          TAD I SUBTM                                            /INT1244
2524  3337          DCA SUBTM                                              /INT1245
2525  4407          JMS I LFPT                                             /INT1246
2526  4344          FDIV F200            /DIVIDE BY 200.                   /INT1247
2527  1340          FADD SUBFT           /ADD DEGREES.                     /INT1248
2530  6737          FPUT I SUBTM         /PUT RESULT INTO FLOATING POINT ANGLE LOCAT/INT1249
2531     0          FEXT                                                   /INT1250
2532  2303          ISZ SUB              /ADVANCE TO NEXT ANGLE.           /INT1251
2533  2336          ISZ SUBK             /TEST COUNTER.                    /INT1252
2534  5306          JMP SUBI             /REPEAT FOR NEXT ANGLE.           /INT1253
2535  5675          JMP I WHERE          /RETURN.                          /INT1254
2536     0  SUBK,   0                                                     /INT1255
2537     0  SUBTM,  0                                                     /INT1256
2540     0  SUBFT,  0.                                                    /INT1257
2541     0          0                                                      /INT1258
```

```
2542     0          0                                                    /INT1259
2543  7773  MIN5,   -5                                                   /INT1260
2544    10  F200,   0010                                                 /INT1261
2545  3100          3100                                                 /INT1262
2546     0          0000                                                 /INT1263
                                                                         /INT1264
             *2600                                                       /INT1265
2600     0  CNTR,   0                    /HARDWARE COUNT REGISTER        /INT1266
                                                                         /INT1267
             /CLOCK INTERRUPT                                            /INT1268
2601  1200  CLCK,   TAD        CNTR     /DOES COUNT EXCEED LIMIT        /INT1269
2602  1267          TAD        MLIM                                     /INT1270
2603  7700          SMA    CLA                                           /INT1271
2604  5216          JMP        EXCD     /YES.  JUMP                     /INT1272
2605  1200          TAD        CNTR     /NO.  ADD TO ACCUMULATED COUNT  /INT1273
2606  1272          TAD        CTLO                                     /INT1274
2607  3272          DCA        CTLO                                     /INT1275
2610  3200          DCA        CNTR     /CLEAR COUNTER                  /INT1276
2611  6311          6311                /TURN OFF CLOCK FLAG            /INT1277
2612  7430          SZL                 /TEST OVERFLOW TO HIGH ORDER    /INT1278
2613  2271          ISZ        CTHI     /ACCUMULATED COUNT              /INT1279
2614  7000          NOP                                                 /INT1280
2615  5224          JMP        IMOTOR                                   /INT1281
2616  1275  EXCD,   TAD        STOUT    /TURN OFF DATA COUNT            /INT1282
2617   306          AND        DOFF                                     /INT1283
2620  6356          6356                                                /INT1284
2621  3275          DCA        STOUT                                    /INT1285
2622  2270          ISZ        CTERR    /SET COUNT ERROR INDICATOR      /INT1286
2623  6311          6311                /CLEAR CLOCK FLAG               /INT1287
                                                                         /INT1288
             /MOTOR INTERRUPT                                            /INT1289
2624  1463  IMOTOR, TAD I LMI           /TEST OVERALL MOTOR INDICATOR.  /INT1290
2625  7650          SNA CLA                                             /INT1291
2626  5232          JMP AUDIO           /IF ZERO, BY-PASS MOTORS.       /INT1292
2627  3463          DCA I LMI           /IF NOT-ZERO, SET TO ZERO.      /INT1293
2630  5631          JMP I LTMDR         /ENTER MOTOR ROUTINES.          /INT1294
2631  1400  LTMDR,  TMDR                                                /INT1295
                                                                         /INT1296
2632  7000  AUDIO,  NOP                 /AUDIO COMMAND OR NOP           /INT1297
                                                                         /INT1298
             /GENERATE 1/10 SEC. INTERRUPTS                              /INT1299
2633  2266  TENTH,  ISZ        TNTK     /TEST COUNTER                   /INT1300
2634  5465          JMP    I   LTSIN    /TERMINATE INTERRUPT IF NOT ZERO /INT1301
2635  1265          TAD        KTNT     /RESET COUNTER                  /INT1302
2636  3266          DCA        TNTK                                     /INT1303
                                                                         /INT1304
             /INTERRUPT PROGRAM FOR DATA COUNT                           /INT1305
2637  1264          TAD        CNTK     /TEST INDICATOR OF TIME TO COUNT /INT1306
2640  7650          SNA    CLA                                           /INT1307
2641  5255          JMP        SGNLT    /EXIT IF ZERO                   /INT1308
2642  1275          TAD        STOUT    /TURN ON DATA COUNT             /INT1309
2643   306          AND        DOFF                                     /INT1310
2644  1276          TAD        DONK                                     /INT1311
2645  6356          6356                                                /INT1312
2646  3275          DCA        STOUT                                    /INT1313
2647  2264          ISZ        CNTK     /INCREMENT AND TEST TIME INDICATOR /INT1314
2650  5255          JMP        SGNLT    /EXIT IF NOT ZERO               /INT1315
2651  1275          TAD        STOUT    /TURN OFF DATA COUNT            /INT1316
2652   306          AND        DOFF                                     /INT1317
2653  6356          6356                                                /INT1318
2654  3275          DCA        STOUT                                    /INT1319
                                                                         /INT1320
             /ENTER SIGNAL TIMER                                         /INT1321
2655  4663  SGNLT,  JMS    I     LSGT                                    /INT1322
                                                                         /INT1323
             /CHART RECORDER DELAY                                       /INT1324
2656  1273  CRD,   TAD          CRT    /TEST DELAY COUNTER              /INT1325
2657  7640         SZA    CLA                                           /INT1326
2660  2273         ISZ          CRT    /INCREMENT COUNTER               /INT1327
2661  7000         NOP                                                  /INT1328
2662  5465         JMP    I     LTSIN /TERMINATE INTERRUPT              /INT1329
                                                                         /INT1330
2663  2135  LSGT,   SGTM                                                /INT1331
2664     0  CNTK,   0                                                   /INT1332
2665  7742  KTNT,   -36                                                 /INT1333
2666     0  TNTK,   0                                                   /INT1334
2667  7470  MLIM,   -310                                                /INT1335
2670     0  CTERR,  0                                                   /INT1336
2671     0  CTHI,   0                                                   /INT1337
2672     0  CTLO,   0                                                   /INT1338
2673     0  CRT,    0                    /DELAY COUNTER                  /INT1339
```

```
2674     0          0                                                    /INTI340
2675     0  STOUT,  0                                                    /INTI341
2676   100  DONK,   0100                                                 /INTI342
                                                                         /INTI343
            /INITIALIZE CLOCK ROUTINE                                    /INTI344
2677     0  INIC,   0                                                    /INTI345
2700  1265          TAD          KTNT                                    /INTI346
2701  3266          DCA          TNTK                                    /INTI347
2702  5677          JMP    I     INIC                                    /INTI348
                                                                         /INTI349
            /START DATA COUNT FOR N TENTH-SECONDS                        /INTI350
2703     0  STCT,   0                                                    /INTI351
2704  3264          DCA          CNTK                                    /INTI352
2705  4720          JMS    I     ADCR      /TURN OFF DATA COUNT          /INTI353
2706  7677  DOFF,   7677                                                 /INTI354
2707  3200          DCA          CNTR      /CLEAR COUNTER, ACCUMULATED COUNT,  /INTI355
2710  3272          DCA          CTLO      /AND COUNT ERROR              /INTI356
2711  3271          DCA          CTHI                                    /INTI357
2712  3270          DCA          CTERR                                   /INTI358
2713  7040          CMA                    /SET COUNTER TO TIME DATA COUNT /INTI359
2714  1703          TAD    I     STCT                                    /INTI360
2715  3264          DCA          CNTK                                    /INTI361
2716  2303          ISZ          STCT      /RETURN                       /INTI362
2717  5703          JMP    I     STCT                                    /INTI363
2720  1363  ADCR,   DCR                                                  /INTI364
                                                                         /INTI365
            /WAIT FOR DATA COUNT                                         /INTI366
2721     0  WTCT,   0                      /WAIT FOR DATA COUNT          /INTI367
2722  1264          TAD          CNTK                                    /INTI368
2723  7640          SZA    CLA                                           /INTI369
2724  5322          JMP          .-2                                     /INTI370
2725  1270          TAD          CTERR     /TEST COUNT ERROR INDICATOR   /INTI371
2726  7640          SZA    CLA                                           /INTI372
2727  5345          JMP          WTCTI     /ERROR RETURN                 /INTI373
2730  1721          TAD    I     WTCT      /STORE ACCUMULATED COUNT      /INTI374
2731  3350          DCA          ADDR                                    /INTI375
2732  1271          TAD          CTHI                                    /INTI376
2733  3045          DCA          HORD                                    /INTI377
2734  1272          TAD          CTLO                                    /INTI378
2735  3046          DCA          LORD                                    /INTI379
2736  1347          TAD          KEXP                                    /INTI380
2737  3044          DCA          EXP                                     /INTI381
2740  4407          JMS    I     LFPT                                    /INTI382
2741  7000          FNOR                                                 /INTI383
2742  6750          FPUT   I     ADDR                                    /INTI384
2743     0          FEXT                                                 /INTI385
2744  2321          ISZ          WTCT                                    /INTI386
2745  2321  WTCTI,  ISZ          WTCT                                    /INTI387
2746  5721          JMP    I     WTCT                                    /INTI388
2747    27  KEXP,   27                                                   /INTI389
2750     0  ADDR,   0                                                    /INTI390
                                                                         /INTI391
            /SET FORMAT OF FLOATING POINT OUTPUT TO XXXX.XXX             /INTI392
            *7462                                                        /INTI393
7462     4          4                                                    /INTI394
7463     3          3                                                    /INTI395


            /SET-UP PROGRAM                                              /SET   1
                                                                         /SET   2
            CTHI#2671                                                    /SET   3
            CTERR#2670                                                   /SET   4
            STCT#2703                                                    /SET   5
            WTCT#2721                                                    /SET   6
            THR#154                                                      /SET   7
            LMI#63                                                       /SET   8
            LINTIN#73                                                    /SET   9
            ANGPRT#1336                                                  /SET  10
            LWHERE#145                                                   /SET  11
            REC#2400                                                     /SET  12
            FACTOR#2426                                                  /SET  13
            MOTSET#531                                                   /SET  14
            LOMGA#66                                                     /SET  15
            LTSIN#65                                                     /SET  16
            LFNK#5                                                       /SET  17
            LFPT#7                                                       /SET  18
            LFIX#34                                                      /SET  19
            COUNT#170                                                    /SET  20
            LCRLF#165                                                    /SET  21
            LFOP#27                                                      /SET  22
```

```
            LWMOT#167                                                   /SET  23
            LOPCH#7C                                                    /SET  24
            MOTST#517                                                   /SET  25
            LFNP#26                                                     /SET  26
            LMOTOR#162                                                  /SET  27
            MIT#1476                                                    /SET  28
            LRTMI#166                                                   /SET  29
            MIO#1575                                                    /SET  30
            MIC#1676                                                    /SET  31
            MIP#1775                                                    /SET  32
            LANG#35                                                     /SET  33
            CTTH#4465                                                   /SET  34
            HORD#45                                                     /SET  35
            ZERO#51C7                                                   /SET  36
            DPIOUT#75C5                                                 /SET  37
                                                                        /SET  38
            *176                                                        /SET  39
176   51C7  ADZERO, ZERO                                                /SET  40
                                                                        /SET  41
            *21C                                                        /SET  42
            /NO AUDIO OUTPUT                                            /SET  43
21C   7000  OMGA,   NOP                                                 /SET  44
211   7000          NOP                                                 /SET  45
212   7000          NOP                                                 /SET  46
            *545                                                        /SET  47
            /INITIALIZE RATEMETER                                       /SET  48
545   3777          DCA I ARNI                                          /SET  49
            *577                                                        /SET  50
577    77C  ARNI,   RNI                                                 /SET  51
            *6CC                                                        /SET  52
            /RN. RATEMETER TYPEWRITER ON                                /SET  53
6CC   7CC1  TYON,   IAC                                                 /SET  54
            /RF. RATEMETER TYPEWRITER OFF                               /SET  55
6C1   3352  TYOFF,  DCA TYPE                                            /SET  56
602   5465          JMP I LTSIN                                         /SET  57
                                                                        /SET  58
            /CN. RATEMETER CHART RECORDER ON                            /SET  59
603   7001  CHRTON, IAC                                                 /SET  60
            /CF. RATEMETER CHART RECORDER OFF                           /SET  61
604   3353  CHRTOF, DCA CHART                                           /SET  62
605   5465          JMP I LTSIN                                         /SET  63
                                                                        /SET  64
            /RT. SET UP TIME FOR RATEMETER                              /SET  65
            TEN#7450                                                    /SET  66
606   4405  SETRTM, JMS I LFNK          /READ NUMBER OF SECONDS TO COUNT. /SET  67
607   4407          JMS I LFPT          /MULTIPLY BY 10.                /SET  68
610   3620          FMPY I LTEN                                         /SET  69
611   1221          FADD ONEHF                                          /SET  70
612      0          FEXT                                                /SET  71
613   4434          JMS I LFIX          /TRUNCATE TO INTEGER.           /SET  72
614   7041          CIA                 /STORE NEGATIVE OF NUMBER OF 1/10 SECONDS. /SET  73
615   3217          DCA RTMSV                                           /SET  74
616   5371          JMP RTMI            /JUMP TO TEST IF RATEMETER IS ON. /SET  75
617      0  RTMSV,  0                                                   /SET  76
620   7450  LTEN,   TEN                                                 /SET  77
621      0  ONEHF,  0000                                                /SET  78
622   2000          2000                                                /SET  79
623      0          0000                                                /SET  80
                                                                        /SET  81
            TTH#624                                                     /SET  82
            OMG#TTH+3                                                   /SET  83
            CHI#OMG+3                                                   /SET  84
            PHI#CHI+3                                                   /SET  85
            *640                                                        /SET  86
640      0  DTTH,   0                                                   /SET  87
641      0          0                                                   /SET  88
642      0          0                                                   /SET  89
643      0  DOMG,   0                                                   /SET  90
644      0          0                                                   /SET  91
645      0          0                                                   /SET  92
646      0  DCHI,   0                                                   /SET  93
647      0          0                                                   /SET  94
650      0          0                                                   /SET  95
651      0  DPHI,   0                                                   /SET  96
652      0          0                                                   /SET  97
653      0          0                                                   /SET  98
            /RN. START RATEMETER                                        /SET  99
654   7001  STRRTM, IAC                 /SET RATEMETER ON INDICATOR.    /SET 100
655   3370          DCA RNI                                             /SET 101
656   1217          TAD RTMSV           /SET TIME FOR COUNTING TO TIME READ IN. /SET 102
657   3267          DCA RTMC                                            /SET 103
```

```
660  4407          JMS I LFPT          /SET SCALING FACTOR.                        /SET 104
661  5760          FGET I LFACSV                                                   /SET 105
662  6761          FPUT I LFACTR                                                   /SET 106
663     0          FEXT                                                            /SET 107
664  7040          CMA                 /WORD COUNTER # -1.                         /SET 108
665  3354          DCA WDK                                                         /SET 109
666  4762  RATE1,  JMS I LSTCT         /START COUNT.                               /SET 110
667     0  RTMC,   0                                                               /SET 111
670  4545          JMS I LWHERE        /SET FLOATING POINT ANGLES TO PRESENT POSIT/SET 112
671  4763          JMS I LWTCT         /WAIT FOR COUNT TO BE COMPLETED.            /SET 113
672   170          COUNT               /    RETURN WITH FLOATING POINT COUNT.      /SET 114
673  7000          NOP                 /    ERROR RETURN.                          /SET 115
674  1352  RATE2,  TAD TYPE            /    NORMAL RETURN. TEST TYPE INDICATOR.    /SET 116
675  7650          SNA CLA                                                         /SET 117
676  5317          JMP RATE4           /DO NOT TYPE.                               /SET 118
677  2354          ISZ WDK             /TEST WORD COUNTER                          /SET 119
700  5312          JMP RATE3                                                       /SET 120
701  1355          TAD WDKK            /RESET WORD COUNTER                         /SET 121
702  3354          DCA WDK                                                         /SET 122
703  4565          JMS I LCRLF         /PUT OUT CR-LF.                             /SET 123
704  1311          TAD SCAN            /IS IT STEP SCANNING.                       /SET 124
705  7650          SNA CLA                                                         /SET 125
706  5312          JMP RATE3           /NO.                                        /SET 126
707  4427          JMS I LFOP          /YES. PRINT ANGLE LAST SET TO SCAN.         /SET 127
710  7777          -1                                                              /SET 128
711     0  SCAN,   0                                                               /SET 129
712  1764  RATE3,  TAD I LCTER         /TEST FOR COUNT ERROR.                      /SET 130
713  7640          SZA CLA                                                         /SET 131
714  5346          JMP RATE6           /ERROR.                                     /SET 132
715  4765          JMS I LDPIOT        /NO ERROR. PRINT COUNT.                     /SET 133
716  2671          CTHI                                                            /SET 134
717  4407  RATE4,  JMS I LFPT          /ADD STEPS TO ANGLES.                       /SET 135
720  5224          FGET TTH                                                        /SET 136
721  1240          FADD DTTH                                                       /SET 137
722  6224          FPUT TTH                                                        /SET 138
723  5227          FGET OMG                                                        /SET 139
724  1243          FADD DOMG                                                       /SET 140
725  6227          FPUT OMG                                                        /SET 141
726  5232          FGET CHI                                                        /SET 142
727  1246          FADD DCHI                                                       /SET 143
730  6232          FPUT CHI                                                        /SET 144
731  5235          FGET PHI                                                        /SET 145
732  1251          FADD DPHI                                                       /SET 146
733  6235          FPUT PHI                                                        /SET 147
734     0          FEXT                                                            /SET 148
735  4766          JMS I LMOTST        /START MOTORS.                              /SET 149
736  1353          TAD CHART           /TEST CHART INDICATOR.                      /SET 150
737  7650          SNA CLA                                                         /SET 151
740  5344          JMP RATE5           /DO NOT CHART.                              /SET 152
741  1764          TAD I LCTER         /TEST ERROR INDICATOR.                      /SET 153
742  7650          SNA CLA             /IF ERROR, DO NOT CHART.                    /SET 154
743  4767          JMS I LREC          /CHART COUNT.                               /SET 155
744  4567  RATE5,  JMS I LWMOT         /WAIT FOR MOTORS TO STOP.                   /SET 156
745  5266          JMP RATE1           /RETURN FOR NEXT COUNT.                     /SET 157
746  1356  RATE6,  TAD ASTK                                                        /SET 158
747  4470          JMS I LOPCH                                                     /SET 159
750  5317          JMP RATE4                                                       /SET 160
751     0  NSTP,   0                                                               /SET 161
752     0  TYPE,   0                                                               /SET 162
753     0  CHART,  0                                                               /SET 163
754     0  WDK,    0                                                               /SET 164
755  7766  WDKK,   -12                                                             /SET 165
756   252  ASTK,   252                                                             /SET 166
757  5107  AZERO,  ZERO                                                            /SET 167
760  2564  LFACSV, FACSV                                                           /SET 168
761  2426  LFACTR, FACTOR                                                          /SET 169
762  2703  LSTCT,  STCT                                                            /SET 170
763  2721  LWTCT,  WTCT                                                            /SET 171
764  2670  LCTER,  CTERR                                                           /SET 172
765  7505  LDPIOT, DPIOUT                                                          /SET 173
766   517  LMOTST, MOTST                                                          /SET 174
767  2400  LREC,   REC                                                             /SET 175
770     0  RNI,    0                                                               /SET 176
                                                                                  /SET 177
           /TEST TO SEE IF RATEMETER IS ON.                                       /SET 178
771  1370  RTMI,   TAD RNI             /IS RATEMETER ON.                           /SET 179
772  7650          SNA CLA                                                         /SET 180
773  5466          JMP I LOMGA         /NO. RETURN TO WAITING LOOP.                /SET 181
774  4567          JMS I LWMOT         /YES. WAIT FOR MOTORS TO STOP.              /SET 182
775  5254          JMP STRRTM          /RESTART RATEMETER                          /SET 183
                                                                                  /SET 184
```

```
                /TWO-CHARACTER KEYBOARD SIGNAL TABLE                                  /SET 185
                *2115                                                                 /SET 186
2115  7771      NINT,   -7                                                            /SET 187
2116  7727      NLIST,  -51                                                           /SET 188
                TSIN#2373                                                             /SET 189
                CALBB#4000                                                            /SET 190
                CALMB#4200                                                            /SET 191
                CENTER#3345                                                           /SET 192
                /INTERRUPT JUMPS                                                      /SET 193
                *2145                                                                 /SET 194
2145  2416            2416            /TN. RATEMETER TYPEWRITER ON.                   /SET 195
2146   600            TYON                                                            /SET 196
2147  2406            2406            /TF. RATEMETER TYPEWRITER OFF.                  /SET 197
2150   601            TYOFF                                                           /SET 198
2151   316            0316            /CN. RATEMETER CHART RECORDER ON.               /SET 199
2152   603            CHRTON                                                          /SET 200
2153   306            0306            /CF. RATEMETER CHART RECORDER OFF.              /SET 201
2154   604            CHRTOF                                                          /SET 202
2155     0            0000                                                            /SET 203
2156  2373            TSIN                                                            /SET 204
2157     0            0000                                                            /SET 205
2160  2373            TSIN                                                            /SET 206
                /MAIN PROGRAM JUMPS                                                   /SET 207
                *2207                                                                 /SET 208
2207   424            0424            /DT. DRIVE 2THETA TO SPECIFIED ANGLE.           /SET 209
2210  2272            SETTHT                                                          /SET 210
2211   417            0417            /DO. DRIVE OMEGA TO SPECIFIED ANGLE.            /SET 211
2212  2300            SETOMG                                                          /SET 212
2213   403            0403            /DC. DRIVE CHI TO SPECIFIED ANGLE.              /SET 213
2214  3331            SETCHI                                                          /SET 214
2215   420            0420            /DP. DRIVE PHI TO SPECIFIED ANGLE.              /SET 215
2216  3337            SETPHI                                                          /SET 216
2217  2224            2224            /RT. READ RATEMETER TIME INTERVAL.              /SET 217
2220   606            SETRTM                                                          /SET 218
2221   322            0322            /CR. CENTER REFLECTION.                         /SET 219
2222  3345            CENTER                                                          /SET 220
2223  1101            1101            /IA. CALCULATE ANGLES.                          /SET 221
2224  2754            CALC                                                            /SET 222
2225   401            0401            /DA. DRIVE TO CALCULATED ANGLES.                /SET 223
2226  3772            DRIVE                                                           /SET 224
2227  2017            2017            /PO. PUNCH OBSERVATION                          /SET 225
2230  7556            PROBS                                                           /SET 226
2231  2206            2206            /RF. RATEMETER OFF.                             /SET 227
2232  3767            RTOFF                                                           /SET 228
2233  2216            2216            /RN. RATEMETER ON.                              /SET 229
2234   654            STRRTM                                                          /SET 230
2235  2324            2324            /ST. READ STEP SIZE FOR 2THETA SCAN.            /SET 231
2236  3613            TSCAN                                                           /SET 232
2237  2317            2317            /SO. READ STEP SIZE FOR OMEGA SCAN.             /SET 233
2240  3616            OSCAN                                                           /SET 234
2241  2303            2303            /SC. READ STEP SIZE FOR CHI SCAN.               /SET 235
2242  3621            CSCAN                                                           /SET 236
2243  2320            2320            /SP. READ STEP SIZE FOR PHI SCAN.               /SET 237
2244  3624            PSCAN                                                           /SET 238
2245   323            0323            /CS. CLEAR ALL STEPS TO ZERO.                   /SET 239
2246  3627            NOSCAN                                                          /SET 240
```

```
2247  2323          2323                  /SS. SET SCALE FOR CHART RECORDER.          /SET 241
2250  2551          SETSCL                                                            /SET 242
2251  2023          2023                  /PS. PRINT SCALE OF CHART RECORDER.         /SET 243
2252  2567          PRSCAL                                                            /SET 244
2253  2322          2322                  /SR. SEARCH FOR COUNT                       /SET 245
2254  3000          SEARCH                                                            /SET 246
2255   302          0302                  /CB. READ CELL PARAMETERS AND CALCULATE MAT/SET 247
2256  4000          CALBB                                                             /SET 248
2257   325          0325                  /CL. READ ORIENTATION REFLECTIONS AND CALCU/SET 249
2260  4200          CALMB                                                             /SET 250
2261     0          0000                                                              /SET 251
2262   210          OMGA                                                              /SET 252
2263     0          0000                                                              /SET 253
2264   210          OMGA                                                              /SET 254
                                                                                      /SET 255
             *2272                                                                    /SET 256
             /DT. READ ANGLE AND DRIVE 2THETA TO IT                                   /SET 257
2272  4426   SETTHT, JMS I LFNP                                                       /SET 258
2273  7777          -1                                                                /SET 259
2274   624          TTH                                                               /SET 260
2275  4562          JMS I LMOTOR                                                      /SET 261
2276  1476          MIT                                                               /SET 262
2277  5566          JMP I LRTMI           /RETURN TO TEST IF RATEMETER IS ON.         /SET 263
                                                                                      /SET 264
             /DO. READ ANGLE AND DRIVE OMEGA TO IT                                    /SET 265
2300  4426   SETOMG, JMS I LFNP                                                       /SET 266
2301  7777          -1                                                                /SET 267
2302   627          OMG                                                               /SET 268
2303  4562          JMS I LMOTOR                                                      /SET 269
2304  1575          MIO                                                               /SET 270
2305  5566          JMP I LRTMI           /RETURN TO TEST IF RATEMETER IS ON.         /SET 271
                                                                                      /SET 272
             *2551                                                                    /SET 273
             /SS. READ NUMBER OF PULSES WHICH IS TO BE FULL SCALE ON CHART RECORDER  /SET 274
             LVFOUT#2425                                                              /SET 275
             FP500#2433                                                               /SET 276
2551  4405   SETSCL, JMS I LFNK           /READ NUMBER                                /SET 277
2552  4407          JMS I LFPT            /COMPUTE SCALE FACTOR, 500/NUMBER.          /SET 278
2553  6361          FPUT SCALE                                                        /SET 279
2554  5233          FGET FP500                                                        /SET 280
2555  4361          FDIV SCALE                                                        /SET 281
2556  6364          FPUT FACSV                                                        /SET 282
2557     0          FEXT                                                              /SET 283
2560  5566          JMP I LRTMI           /RETURN TO TEST IF RATEMETER IS ON.         /SET 284
2561     0   SCALE, 0                                                                /SET 285
2562     0          0                                                                 /SET 286
2563     0          0                                                                 /SET 287
2564     0   FACSV, 0                                                                /SET 288
2565     0          0                                                                 /SET 289
2566     0          0                                                                 /SET 290
                                                                                      /SET 291
             /PS. PRINT SCALE                                                         /SET 292
2567  4407   PRSCAL, JMS I LFPT                                                       /SET 293
2570  5361          FGET SCALE                                                        /SET 294
2571     0          FEXT                                                              /SET 295
2572  4625          JMS I LVFOUT                                                      /SET 296
2573     7          7                                                                 /SET 297
2574     0          0                                                                 /SET 298
2575  5566          JMP I LRTMI           /RETURN TO TEST IF RATEMETER IS ON.         /SET 299
                                                                                      /SET 300
             *2632                                                                    /SET 301
2632  7000          NOP                   /NO AUDIO OUTPUT                            /SET 302
             *2662                                                                    /SET 303
2662  5465          JMP I LTSIN                                                       /SET 304
                                                                                      /SET 305
             *2754                                                                    /SET 306
             /IA. CALCULATE ANGLES FOR GIVEN SET OF INDICES                           /SET 307
             FH#4454                                                                  /SET 308
             SINT#114                                                                 /SET 309
             ONE#146                                                                  /SET 310
2754  4426   CALC,  JMS I LFNP                                                       /SET 311
2755  7775          -3                                                                /SET 312
2756  4454          FH                                                                /SET 313
2757  4435          JMS I LANG                                                        /SET 314
2760  4407          JMS I LFPT            /TEST SIN(THETA)                            /SET 315
2761  5114          FGET SINT                                                         /SET 316
2762     7          FABS                                                              /SET 317
2763  2146          FSUB ONE                                                          /SET 318
2764     0          FEXT                                                              /SET 319
2765  1045          TAD HORD                                                          /SET 320
2766  7750          SPA SNA CLA                                                       /SET 321
```

```
2767  5374          JMP CALCI                                                  /SET 322
2770  4407          JMS I LFPT        /GREATER THAN ONE. SET CTTH TO ZERO.     /SET 323
2771  5576          FGET I ADZERO                                              /SET 324
2772  6776          FPUT I LCTTH                                               /SET 325
2773     0          FEXT                                                       /SET 326
2774  4427  CALCI,  JMS I LFOP        /PRINT CALCULATED ANGLES                 /SET 327
2775  7774          -4                                                         /SET 328
2776  4465  LCTTH,  CTTH                                                      /SET 329
2777  5466          JMP I LOMGA                                                /SET 330
                                                                             /SET 331
            /SR. SEARCH FOR COUNT                                            /SET 332
            *3000                                                            /SET 333
3000  4473  SEARCH, JMS I LINTIN      /READ INDICATOR OF WHICH MOTOR IS TO DRIVE./SET 334
3001  1214          TAD MIN1                                                   /SET 335
3002   154          AND THR                                                    /SET 336
3003  7100          CLL               /SET UP ADDRESS OF CORRESPONDING ANGLE.  /SET 337
3004  7004          RAL                                                        /SET 338
3005  1350          TAD T1                                                     /SET 339
3006  3010          DCA I0                                                     /SET 340
3007  1410          TAD I I0                                                   /SET 341
3010  3215          DCA A                                                      /SET 342
3011  1410          TAD I I0                                                   /SET 343
3012  3271          DCA MIA                                                    /SET 344
3013  4426          JMS I LFNP        /READ STARTING POINT OF FIRST MOTOR.     /SET 345
3014  7777  MIN1,   -1                                                         /SET 346
3015     0  A,      0                 /ADDRESS OF ANGLE TO BE DRIVEN.          /SET 347
3016  4426          JMS I LFNP        /READ FINISH OF FIRST MOTOR              /SET 348
3017  7777          -1                                                         /SET 349
3020  3130          DESTA                                                      /SET 350
3021  4473          JMS I LINTIN      /READ INDICATOR OF WHICH MOTOR IS TO STEP. /SET 351
3022  7450          SNA                                                        /SET 352
3023  5365          JMP SRCH6         /IF ZERO, NO MOTOR IS TO STEP.           /SET 353
3024  1214          TAD MIN1                                                   /SET 354
3025   154          AND THR                                                    /SET 355
3026  7100          CLL               /SET UP ADDRESS OF CORRESPONDING ANGLE.  /SET 356
3027  7004          RAL                                                        /SET 357
3030  1350          TAD T1                                                     /SET 358
3031  3010          DCA I0                                                     /SET 359
3032  1410          TAD I I0                                                   /SET 360
3033  3240          DCA B                                                      /SET 361
3034  1410          TAD I I0                                                   /SET 362
3035  3326          DCA MIB                                                    /SET 363
3036  4426          JMS I LFNP        /READ STARTING POINT OF SECOND MOTOR.    /SET 364
3037  7777          -1                                                         /SET 365
3040   624  B,      TTH               /ADDRESS OF ANGLE TO BE STEPPED.         /SET 366
3041  4426          JMS I LFNP        /READ FINISH AND STEP SIZE OF SECOND MOTOR./SET 367
3042  7776          -2                                                         /SET 368
3043  3133          DESTB                                                      /SET 369
3044  4407          JMS I LFPT        /COMPUTE NUMBER OF STEPS.                /SET 370
3045  5333          FGET DESTB                                                 /SET 371
3046  2640          FSUB I B                                                   /SET 372
3047  4336          FDIV DELB                                                  /SET 373
3050     7          FABS                                                       /SET 374
3051     0          FEXT                                                       /SET 375
3052  4434          JMS I LFIX                                                 /SET 376
3053  7040  SRCH5,  CMA               /SET COUNTER.                            /SET 377
3054  3344          DCA NSB                                                    /SET 378
3055  4754          JMS I AMOTST      /DRIVE TO STARTING LOCATIONS             /SET 379
3056  4426          JMS I LFNP        /READ MINIMUM COUNT AT WHICH TO STOP.    /SET 380
3057  7777          -1                                                         /SET 381
3060  3141          LIMIT                                                      /SET 382
3061  4407  SRCH4,  JMS I LFPT                                                 /SET 383
3062  5615          FGET I A          /SAVE CURRENT POSITION OF MOTOR WHICH WILL /SET 384
3063  6345          FPUT SAVE                                                  /SET 385
3064  5330          FGET DESTA        /PUT DESTINATION IN FLOATING POINT ANGLE LO/SET 386
3065  6615          FPUT I A                                                   /SET 387
3066     0          FEXT                                                       /SET 388
3067  4567          JMS I LWMOT       /WAIT FOR SETTING TO FINISH.             /SET 389
3070  4562          JMS I LMOTOR      /START MOTOR.                            /SET 390
3071     0  MIA,    0                                                          /SET 391
3072  4751  SRCH1,  JMS I ASTCT       /START COUNTING FOR .1 SECONDS.          /SET 392
3073  7777          -1                                                         /SET 393
3074  4752          JMS I AWTCT       /WAIT FOR COUNT TO FINISH.               /SET 394
3075   170          COUNT                                                      /SET 395
3076  7000          NOP                                                        /SET 396
3077  4407          JMS I LFPT        /COMPARE COUNT TO LIMIT.                 /SET 397
3100  5170          FGET COUNT                                                 /SET 398
3101  2341          FSUB LIMIT                                                 /SET 399
3102     0          FEXT                                                       /SET 400
3103  1045          TAD HORD                                                   /SET 401
3104  7710          SPA CLA                                                    /SET 402
```

```
3105  5310          JMP SRCH2          /LESS THAN LIMIT.                          /SET 403
3106  3463          DCA I LMI          /GREATER THAN OR EQUAL TO LIMIT.  STOP MOTO/SET 404
3107  5753          JMP I LAPRT        /PRINT CURRENT POSITION - THEN TO WAITING L/SET 405
3110  1463  SRCH2,  TAD I LMI          /HAS MOTOR STOPPED.                        /SET 406
3111  7640          SZA CLA                                                       /SET 407
3112  5272          JMP SRCHI          /NO, START COUNT AGAIN.                    /SET 408
3113  4407          JMS I LFPT         /YES, STEP OTHER MOTOR.                    /SET 409
3114  5640          FGET I B                                                      /SET 410
3115  1336          FADD DELB                                                     /SET 411
3116  6640          FPUT I B                                                      /SET 412
3117  5345          FGET SAVE          /SET UP FOR MOTOR TO DRIVE BACK.           /SET 413
3120  6330          FPUT DESTA                                                    /SET 414
3121     0          FEXT                                                          /SET 415
3122  2344          ISZ NSB            /INCREMENT AND TEST COUNTER OF STEPS.      /SET 416
3123  5325          JMP SRCH3                                                     /SET 417
3124  5466          JMP I LOMGA        /IF ZERO, GO TO WAITING LOOP.              /SET 418
3125  4562  SRCH3,  JMS I LMOTOR       /IF NOT ZERO, STEP MOTOR.                  /SET 419
3126     0  MIB,    0                                                             /SET 420
3127  5261          JMP SRCH4          /JUMP.                                     /SET 421
                                                                                  /SET 422
3130     0  DESTA,  0                                                             /SET 423
3131     0          0                                                             /SET 424
3132     0          0                                                             /SET 425
3133     0  DESTB,  0                                                             /SET 426
3134     0          0                                                             /SET 427
3135     0          0                                                             /SET 428
3136     0  DELB,   0                                                             /SET 429
3137     0          0                                                             /SET 430
3140     0          0                                                             /SET 431
3141     0  LIMIT,  0                                                             /SET 432
3142     0          0                                                             /SET 433
3143     0          0                                                             /SET 434
3144     0  NSB,    0                                                             /SET 435
3145     0  SAVE,   0                                                             /SET 436
3146     0          0                                                             /SET 437
3147     0          0                                                             /SET 438
3150  3154  TI,     SRCHTB-1                                                      /SET 439
3151  2703  ASTCT,  STCT                                                          /SET 440
3152  2721  AWTCT,  WTCT                                                          /SET 441
3153  1336  LAPRT,  ANGPRT                                                        /SET 442
3154   517  AMOTST, MOTST                                                         /SET 443
3155   624  SRCHTB, TTH                                                           /SET 444
3156  1476          MIT                                                           /SET 445
3157   627          OMG                                                           /SET 446
3160  1575          MIO                                                           /SET 447
3161   632          CHI                                                           /SET 448
3162  1676          MIC                                                           /SET 449
3163   635          PHI                                                           /SET 450
3164  1775          MIP                                                           /SET 451
3165  3336  SRCH6,  DCA DELB           /SET FOR NO STEPPING                       /SET 452
3166  3337          DCA DELB+1                                                    /SET 453
3167  3340          DCA DELB+2                                                    /SET 454
3170  5253          JMP SRCH5                                                     /SET 455
                                                                                  /SET 456
            *3331                                                                 /SET 457
            /DC. READ ANGLE AND DRIVE CHI TO IT                                   /SET 458
3331  4426  SETCHI, JMS I LFNP                                                   /SET 459
3332  7777          -1                                                            /SET 460
3333   632          CHI                                                           /SET 461
3334  4562          JMS I LMOTOR                                                  /SET 462
3335  1676          MIC                                                           /SET 463
3336  5566          JMP I LRTMI        /RETURN TO TEST IF RATEMETER IS ON.        /SET 464
                                                                                  /SET 465
            /DP. READ ANGLE AND DRIVE PHI TO IT                                   /SET 466
3337  4426  SETPHI, JMS I LFNP                                                   /SET 467
3340  7777          -1                                                            /SET 468
3341   635          PHI                                                           /SET 469
3342  4562          JMS I LMOTOR                                                  /SET 470
3343  1775          MIP                                                           /SET 471
3344  5566          JMP I LRTMI        /RETURN TO TEST IF RATEMETER IS ON.        /SET 472
                                                                                  /SET 473
            *3600                                                                 /SET 474
            /SUBROUTINE TO SET UP STEP SCANS                                      /SET 475
3600     0  STSCN,  0                                                             /SET 476
3601  1600          TAD I STSCN        /SET ADDRESS FOR ANGLE TO BE PRINTED BY RAT/SET 477
3602  3612          DCA I LSCAN                                                   /SET 478
3603  2200          ISZ STSCN          /ADVANCE TO ADDRESS OF CORRESPONDING STEP S/SET 479
3604  1600          TAD I STSCN        /SET ADDRESS FOR READING IN STEP SIZE.     /SET 480
3605  3210          DCA DELTA                                                     /SET 481
3606  4426          JMS I LFNP         /READ IN STEP SIZE.                        /SET 482
3607  7777          -1                                                            /SET 483
```

```
3610     0  DELTA,  0                                                          /SET 484
3611  5566          JMP I LRTMI          /RETURN TO TEST IF RATEMETER IS ON.    /SET 485
3612   711  LSCAN,  SCAN                                                        /SET 486
                                                                                /SET 487
            /MAIN PROGRAMS TO SET UP STEP SCANS.                                /SET 488
            /ST.                                                                /SET 489
3613  4200  TSCAN,  JMS STSCN           /2THETA                                /SET 490
3614   624          TTH                                                         /SET 491
3615   640  LDTTH,  DTTH                                                        /SET 492
                                                                                /SET 493
            /SO.                                                                /SET 494
3616  4200  OSCAN,  JMS STSCN           /OMEGA                                 /SET 495
3617   627          OMG                                                         /SET 496
3620   643  LDOMG,  DOMG                                                        /SET 497
                                                                                /SET 498
            /SC.                                                                /SET 499
3621  4200  CSCAN,  JMS STSCN                                                   /SET 500
3622   632          CHI                  /CHI                                   /SET 501
3623   646  LDCHI,  DCHI                                                        /SET 502
                                                                                /SET 503
            /SP.                                                                /SET 504
3624  4200  PSCAN,  JMS STSCN                                                   /SET 505
3625   635          PHI                  /PHI                                   /SET 506
3626   651  LDPHI,  DPHI                                                        /SET 507
                                                                                /SET 508
            /CS. SET UP FOR NO STEPPING                                         /SET 509
3627  4407  NOSCAN, JMS I LFPT           /SET ALL STEP SIZES TO ZERO.           /SET 510
3630  5640          FGET I LZERO                                                /SET 511
3631  6615          FPUT I LDTTH                                                /SET 512
3632  6620          FPUT I LDOMG                                                /SET 513
3633  6623          FPUT I LDCHI                                                /SET 514
3634  6626          FPUT I LDPHI                                                /SET 515
3635     0          FEXT                                                        /SET 516
3636  3612          DCA I LSCAN                                                 /SET 517
3637  5566          JMP I LRTMI          /RETURN TO TEST IF RATEMETER IS ON.    /SET 518
3640  5107  LZERO,  ZERO                                                        /SET 519
                                                                                /SET 520
            *3767                                                               /SET 521
            /RF. RATEMETER OFF                                                  /SET 522
3767  3771  RTOFF,  DCA I LRNI                                                  /SET 523
3770  5466          JMP I LOMGA                                                 /SET 524
3771   770  LRNI,   RNI                                                         /SET 525
                                                                                /SET 526
            /DA. DRIVE TO CALCULATED ANGLES                                     /SET 527
3772  4774  DRIVE,  JMS I LMSET                                                 /SET 528
3773  5466          JMP I LOMGA                                                 /SET 529
3774   531  LMSET,  MOTSET                                                      /SET 530
                                                                                /SET 531
            /SET FORMAT OF FLOATING POINT OUTPUT TO XXXX.XXX                    /SET 532
            *7462                                                               /SET 533
7462     4          4                                                           /SET 534
7463     3          3                                                           /SET 535
                                                                                /SET 536
            /PO. PREPARE INPUT TAPE OF OBSERVATIONS FOR LEAST SQUARES PROGRAM   /SET 537
            MIN4#143                                                            /SET 538
            M20#157                                                             /SET 539
            KPROBS#100                                                          /SET 540
            *7556                                                               /SET 541
7556  1143  PROBS,  TAD MIN4             /ALLOW PUNCHING OF TYPE INTEGER AND INDICES/SET 542
7557  3100          DCA KPROBS                                                  /SET 543
7560  4473  PROBS1, JMS I LINTIN                                                /SET 544
7561  7200          CLA                  /IGNORE INPUT                          /SET 545
7562  2100          ISZ KPROBS                                                  /SET 546
7563  5360          JMP PROBS1                                                  /SET 547
7564  4545          JMS I LWHERE         /PUT OUT CURRENT ANGLES                /SET 548
7565  4427          JMS I LFOP                                                  /SET 549
7566  7774          -4                                                          /SET 550
7567   624          TTH                                                         /SET 551
7570  1157          TAD M20              /PUT OUT 2 INCHES OF LEADER            /SET 552
7571  3100          DCA KPROBS                                                  /SET 553
7572  1377  PROBS2, TAD LEAD                                                    /SET 554
7573  4470          JMS I LOPCH                                                 /SET 555
7574  2100          ISZ KPROBS                                                  /SET 556
7575  5372          JMP PROBS2                                                  /SET 557
7576  5466          JMP I LOMGA                                                 /SET 558
7577   200  LEAD,   200                                                         /SET 559
                                                                                /SET 560
```

```
          /PEAK FINDING PROGRAM                                          /SET 562
          LINTIN#73                                                      /SET 563
          THR#154                                                        /SET 564
          TTH#624                                                        /SET 565
          OMG#TTH+3                                                      /SET 566
          CHI#OMG+3                                                      /SET 567
          STCT#2703                                                      /SET 568
          WTCT#2721                                                      /SET 569
          MOTST#517                                                      /SET 570
          ANGPRT#1336                                                    /SET 571
          LWHERE#145                                                     /SET 572
          LFPT#7                                                         /SET 573
          LFOP#27                                                        /SET 574
          EXP#44                                                         /SET 575
          HORD#45                                                        /SET 576
          LMI#63                                                         /SET 577
          LOMGA#66                                                       /SET 578
          LFLT#71                                                        /SET 579
          ONE#146                                                        /SET 580
          TWO#151                                                        /SET 581
          MTWO#155                                                       /SET 582
          LCRLF#165                                                      /SET 583
          LWMOT#167                                                      /SET 584
          ZERO#5107                                                      /SET 585
          DPIOUT#7505                                                    /SET 586
                                                                         /SET 587
          *100                                                           /SET 588
100     0 OMGD,   0                    /OMEGA STEP SIZE                  /SET 589
101     0         0                                                      /SET 590
102     0         0                                                      /SET 591
103     0 OMGC,   0                    /CENTER OF OMEGA SCAN             /SET 592
104     0         0                                                      /SET 593
105     0         0                                                      /SET 594
106     0 OMGM,   0                    /OMEGA FOR MAXIMUM COUNT          /SET 595
107     0         0                                                      /SET 596
110     0         0                                                      /SET 597
111     0 TTHZ,   0                    /CURRENT CENTRAL TWO THETA        /SET 598
112     0         0                                                      /SET 599
113     0         0                                                      /SET 600
114     0 OMGZ,   0                    /CURRENT CENTRAL OMEGA            /SET 601
115     0         0                                                      /SET 602
116     0         0                                                      /SET 603
117     0 CHIZ,   0                    /CURRENT CENTRAL CHI              /SET 604
120     0         0                                                      /SET 605
121     0         0                                                      /SET 606
122     0 DEL,    0                    /CURRENT INCREMENT FOR SEARCH     /SET 607
123     0         0                                                      /SET 608
124     0         0                                                      /SET 609
125     0 LIMIT,  0                    /INTENSITY TO BE FOUND BY SEARCH  /SET 610
126     0         0                                                      /SET 611
127     0         0                                                      /SET 612
130     0 CMAX,   0                    /MAXIMUM COUNT                    /SET 613
131     0         0                                                      /SET 614
132     0         0                                                      /SET 615
133     0 CMAXZ,  TEMP, 0                                                /SET 616
134     0         0                                                      /SET 617
135     0         0                                                      /SET 618
136     0 NS,     0                    /NUMBER OF STEPS IN OMEGA SCAN    /SET 619
137     0 MODE,   0                    /MODE#0 FOR CHI SEARCH            /SET 620
                                                                         /SET 621
          /CONVERGE ON SPECIFIED COUNT                                   /SET 622
          *3200                                                          /SET 623
3200    0 CONV,   0                                                      /SET 624
3201 3315         DCA IND              /CLEAR INDICATOR                  /SET 625
3202 4407         JMS I LFPT           /SET SIGN OF STEP POSITIVE        /SET 626
3203 5146         FGET ONE                                               /SET 627
3204 6316         FPUT SGN                                               /SET 628
3205 5111         FGET TTHZ            /SET ANGLES                       /SET 629
3206 6712         FPUT I ATTH                                            /SET 630
3207 5114         FGET OMGZ                                              /SET 631
3210 6103         FPUT OMGC                                              /SET 632
3211 5117         FGET CHIZ                                              /SET 633
3212 6713         FPUT I ACHI                                            /SET 634
3213    0         FEXT                                                   /SET 635
3214 1137 REPEAT, TAD MODE             /TEST MODE                        /SET 636
3215 7640         SZA CLA                                                /SET 637
3216 5226         JMP TTSET                                              /SET 638
3217 4407         JMS I LFPT           /CHI SEARCH. INCREMENT CHI        /SET 639
3220 5122         FGET DEL                                               /SET 640
3221 3316         FMPY SGN                                               /SET 641
3222 1713         FADD I ACHI                                            /SET 642
```

```
3223  6713          FPUT I ACHI                                          /SET 643
3224     0          FEXT                                                 /SET 644
3225  5242          JMP TESTD                                            /SET 645
3226  4407  TTSET,  JMS I LFPT          /COUNTER SEARCH. INCREMENT ANGLES /SET 646
3227  5122          FGET DEL                                             /SET 647
3230  3316          FMPY SGN                                             /SET 648
3231  3151          FMPY TWO                                             /SET 649
3232  1712          FADD I ATTH                                          /SET 650
3233  6712          FPUT I ATTH                                          /SET 651
3234  5122          FGET DEL                                             /SET 652
3235  3316          FMPY SGN                                             /SET 653
3236     6          FNEG                                                 /SET 654
3237  1103          FADD OMGC                                            /SET 655
3240  6103          FPUT OMGC                                            /SET 656
3241     0          FEXT                                                 /SET 657
3242  4407  TESTD,  JMS I LFPT          /TEST DEL                        /SET 658
3243  5122          FGET DEL                                             /SET 659
3244     7          FABS                                                 /SET 660
3245  2307          FSUB DELMIN                                          /SET 661
3246     0          FEXT                                                 /SET 662
3247  1045          TAD HORD                                             /SET 663
3250  7710          SPA CLA                                              /SET 664
3251  5600          JMP I CONV          /RETURN                          /SET 665
3252  4714          JMS I LSCAN         /OMEGA SCAN                      /SET 666
3253  4407          JMS I LFPT          /TEST CMAX                       /SET 667
3254  5130          FGET CMAX                                            /SET 668
3255  2125          FSUB LIMIT                                           /SET 669
3256     0          FEXT                                                 /SET 670
3257  1045          TAD HORD                                             /SET 671
3260  7710          SPA CLA                                              /SET 672
3261  5272          JMP TOOFAR                                           /SET 673
3262  4407          JMS I LFPT          /NOT FAR ENOUGH                  /SET 674
3263  5146          FGET ONE                                             /SET 675
3264  6316          FPUT SGN                                             /SET 676
3265     0          FEXT                                                 /SET 677
3266  1315          TAD IND             /TEST INDICATOR                  /SET 678
3267  7640          SZA CLA                                              /SET 679
3270  5301          JMP DIVIDE                                           /SET 680
3271  5214          JMP REPEAT                                           /SET 681
3272  4407  TOOFAR, JMS I LFPT          /BACK UP                         /SET 682
3273  5146          FGET ONE                                             /SET 683
3274     6          FNEG                                                 /SET 684
3275  6316          FPUT SGN                                             /SET 685
3276     0          FEXT                                                 /SET 686
3277  7001          IAC                 /SET INDICATOR                   /SET 687
3300  3315          DCA IND                                              /SET 688
3301  4407  DIVIDE, JMS I LFPT          /REDUCE DEL                      /SET 689
3302  5122          FGET DEL                                             /SET 690
3303  4151          FDIV TWO                                             /SET 691
3304  6122          FPUT DEL                                             /SET 692
3305     0          FEXT                                                 /SET 693
3306  5214          JMP REPEAT                                           /SET 694
3307  7771  DELMIN, 7771                /.00390625                       /SET 695
3310  2000          2000                                                 /SET 696
3311     0          0000                                                 /SET 697
3312   624  ATTH,   TTH                                                  /SET 698
3313     0  ACHI,   0                                                    /SET 699
3314  3705  LSCAN,  SCAN                                                 /SET 700
3315     0  IND,    0                   /INDICATOR FOR LIMIT REACHED     /SET 701
3316     0  SGN,    0                   /PLUS OR MINUS ONE               /SET 702
3317     0          0                                                    /SET 703
3320     0          0                                                    /SET 704
3321  6263  NOPLAT, 5263-NOP            /(JMP NPLAT)-NOP                 /SET 705
3322  7000  CNOP,   NOP                                                  /SET 706
3323  3647  LOMSCN, OMGSCN                                               /SET 707
3324   632  ADCHI,  CHI                                                  /SET 708
3325  3555  LLCHI,  LCHI                                                 /SET 709
3326  4136  NOS,    3136-NOP            /(DCA NS)-NOP                    /SET 710
3327  3400  LVINS1, VINS1                                                /SET 711
3330  3464  LVINS2, VINS2                                                /SET 712
                                                                         /SET 713
            *3345                                                        /SET 714
            /CR. CENTER REFLECTION IN COUNTER                            /SET 715
3345  4473  CENTER, JMS I LINTIN        /IS CHECK TO BE SURE THAT WE ARE ON PLATEAU/SET 716
3346  7650          SNA CLA             /PERFORMED                       /SET 717
3347  1321          TAD NOPLAT          /0#NO                            /SET 718
3350  1322          TAD CNOP            /1#YES                           /SET 719
3351  3727          DCA I LVINS1        /SET VARIABLE INSTRUCTION        /SET 720
3352  4473          JMS I LINTIN        /CHI OR PHI SCAN                 /SET 721
3353  7640          SZA CLA                                              /SET 722
3354  1154          TAD THR             /1#PHI SCAN                      /SET 723
```

```
3355  1324          TAD ADCHI        /0#CHI SCAN                                  /SET 724
3356  3313          DCA ACHI         /SET VARIABLE ADDRESSES                      /SET 725
3357  1313          TAD ACHI                                                      /SET 726
3360  3725          DCA I LLCHI                                                   /SET 727
3361  4473          JMS I LINTIN     /IS OMEGA SCAN DURING CHI (OR PHI) SEARCH T/SET 728
3362  7650          SNA CLA          /PERFORMED                                   /SET 729
3363  1326          TAD NOS          /0#NO                                        /SET 730
3364  1322          TAD ONOP         /1#YES                                       /SET 731
3365  3730          DCA I LVINS2     /SET VARIABLE INSTRUCTION                    /SET 732
3366  4545          JMS I LWHERE     /GET ANGLES                                  /SET 733
3367  4723          JMS I LOMSCN     /PERFORM COARSE AND FINE OMEGA SCANS         /SET 734
3370  4407  PLAT,   JMS I LFPT       /SET INITIAL ANGLES                          /SET 735
3371  5712          FGET I ATTH                                                   /SET 736
3372  6111          FPUT TTHZ                                                     /SET 737
3373  5106          FGET OMGM                                                     /SET 738
3374  6114          FPUT OMGZ                                                     /SET 739
3375  5713          FGET I ACHI                                                   /SET 740
3376  6117          FPUT CHIZ                                                     /SET 741
3377     0          FEXT                                                          /SET 742
3400     0  VINS1,  0                /VARIABLE INSTRUCTION - JMP NPLAT OR NOP     /SET 743
3401  4407          JMS I LFPT                                                    /SET 744
3402  2361          FSUB DELC        /SET CHI                                     /SET 745
3403  6755          FPUT I LCHI                                                   /SET 746
3404  5130          FGET CMAX        /SET INITIAL COUNT                           /SET 747
3405  3364          FMPY SAFETY                                                   /SET 748
3406  6133          FPUT CMAXZ                                                    /SET 749
3407  5130          FGET CMAX        /SET LIMIT                                   /SET 750
3410  4151          FDIV TWO                                                      /SET 751
3411  6125          FPUT LIMIT                                                    /SET 752
3412     0          FEXT                                                          /SET 753
3413  1155          TAD MTWO         /SET COUNTER                                 /SET 754
3414  3372          DCA KC                                                        /SET 755
3415  1155  INNER,  TAD MTWO         /INITIALIZE INNER LOOP                       /SET 756
3416  3373          DCA KT                                                        /SET 757
3417  4407          JMS I LFPT                                                    /SET 758
3420  5111          FGET TTHZ                                                     /SET 759
3421  2361          FSUB DELC                                                     /SET 760
3422  6753          FPUT I LTTH                                                   /SET 761
3423  5361          FGET DELC                                                     /SET 762
3424  4151          FDIV TWO                                                      /SET 763
3425  1114          FADD OMGZ                                                     /SET 764
3426  6103          FPUT OMGC                                                     /SET 765
3427     0          FEXT                                                          /SET 766
3430  4757  OSCAN,  JMS I ASCAN      /SCAN                                        /SET 767
3431  4407          JMS I LFPT       /TEST COUNT                                  /SET 768
3432  5130          FGET CMAX                                                     /SET 769
3433  2133          FSUB CMAXZ                                                    /SET 770
3434     0          FEXT                                                          /SET 771
3435  1045          TAD HORD                                                      /SET 772
3436  7700          SMA CLA                                                       /SET 773
3437  5775          JMP I LPLAT      /SIGNIFICANTLY HIGHER. TRY AGAIN.            /SET 774
3440  4407          JMS I LFPT       /NOT HIGHER                                  /SET 775
3441  5361          FGET DELC        /ADVANCE TWO THETA AND OMEGA                 /SET 776
3442  1111          FADD TTHZ                                                     /SET 777
3443  6753          FPUT I LTTH                                                   /SET 778
3444  5361          FGET DELC                                                     /SET 779
3445  4151          FDIV TWO                                                      /SET 780
3446     6          FNEG                                                          /SET 781
3447  1114          FADD OMGZ                                                     /SET 782
3450  6103          FPUT OMGC                                                     /SET 783
3451     0          FEXT                                                          /SET 784
3452  2373          ISZ KT           /TEST INNER COUNTER                          /SET 785
3453  5230          JMP OSCAN                                                     /SET 786
3454  4407          JMS I LFPT       /ADVANCE CHI                                 /SET 787
3455  5361          FGET DELC                                                     /SET 788
3456  1117          FADD CHIZ                                                     /SET 789
3457  6755          FPUT I LCHI                                                   /SET 790
3460     0          FEXT                                                          /SET 791
3461  2372          ISZ KC           /TEST OUTER COUNTER                          /SET 792
3462  5215          JMP INNER                                                     /SET 793
3463  3137  NPLAT,  DCA MODE         /FIND UPPER CHI LIMIT                        /SET 794
3464     0  VINS2,  0                                                             /SET 795
3465  4407          JMS I LFPT                                                    /SET 796
3466  5361          FGET DELC                                                     /SET 797
3467  6122          FPUT DEL                                                      /SET 798
3470     0          FEXT                                                          /SET 799
3471  4756          JMS I LCONV                                                   /SET 800
3472  4407          JMS I LFPT                                                    /SET 801
3473  5755          FGET I LCHI                                                   /SET 802
3474  6133          FPUT TEMP                                                     /SET 803
3475  5361          FGET DELC        /FIND LOWER CHI LIMIT                        /SET 804
```

```
3476    6          FNEG                                                    /SET 805
3477 6122          FPUT DEL                                                /SET 806
3500    0          FEXT                                                    /SET 807
3501 4756          JMS I LCONV                                             /SET 808
3502 4407          JMS I LFPT          /COMPUTE CENTER FOR CHI             /SET 809
3503 5755          FGET I LCHI                                             /SET 810
3504 1133          FADD TEMP                                               /SET 811
3505 4151          FDIV TWO                                                /SET 812
3506 6117          FPUT CHIZ                                               /SET 813
3507 6755           FPUT I LCHI                                            /SET 814
3510    0          FEXT                                                    /SET 815
3511 4774          JMS I LOSCN         /PERFORM COARSE AND FINE OMEGA SCANS /SET 816
3512 4407          JMS I LFPT          /RESET OMEGA                        /SET 817
3513 5106          FGET OMGM                                               /SET 818
3514 6114          FPUT OMGZ                                               /SET 819
3515 5361          FGET DELC           /FIND UPPER COUNTER LIMIT           /SET 820
3516 6122          FPUT DEL                                                /SET 821
3517    0          FEXT                                                    /SET 822
3520 2137          ISZ MODE            /CHANGE MODE                        /SET 823
3521 3136          DCA NS              /SET FOR NO-OMEGA SCAN              /SET 824
3522 4756          JMS I LCONV                                             /SET 825
3523 4407          JMS I LFPT                                              /SET 826
3524 5753          FGET I LTTH                                             /SET 827
3525 6133          FPUT TEMP                                               /SET 828
3526 5103          FGET OMGC                                               /SET 829
3527 6367          FPUT TEMO                                               /SET 830
3530 5361          FGET DELC           /FIND LOWER COUNTER LIMIT           /SET 831
3531    6          FNEG                                                    /SET 832
3532 6122          FPUT DEL                                                /SET 833
3533    0          FEXT                                                    /SET 834
3534 4756          JMS I LCONV                                             /SET 835
3535 4407          JMS I LFPT          /COMPUTE CENTER FOR COUNTER         /SET 836
3536 5753          FGET I LTTH                                             /SET 837
3537 1133          FADD TEMP                                               /SET 838
3540 4151          FDIV TWO                                                /SET 839
3541 6753          FPUT I LTTH                                             /SET 840
3542 5103          FGET OMGC                                               /SET 841
3543 1367          FADD TEMO                                               /SET 842
3544 4151          FDIV TWO                                                /SET 843
3545 6754          FPUT I LOMG                                             /SET 844
3546    0          FEXT                                                    /SET 845
3547 4760          JMS I AMOTST        /GO THERE                           /SET 846
3550 4567          JMS I LWMOT         /WAIT FOR MOTORS TO STOP.           /SET 847
3551 5752          JMP I LPA           /PRINT RESULTING ANGLES.            /SET 848
3552 1336  LPA,    ANGPRT                                                  /SET 849
3553  624  LTTH,   TTH                                                     /SET 850
3554  627  LOMG,   OMG                                                     /SET 851
3555    0  LCHI,   0                                                       /SET 852
3556 3200  LCONV,  CONV                                                    /SET 853
3557 3705  ASCAN,  SCAN                                                    /SET 854
3560  517  AMOTST, MOTST                                                   /SET 855
3561    0  DELC,   0000                 /.640                               /SET 856
3562 2436          2436                                                    /SET 857
3563 5605          5605                                                    /SET 858
3564    1  SAFETY, 0001                 /1.2                                /SET 859
3565 2314          2314                                                    /SET 860
3566 6315          6315                                                    /SET 861
3567    0  TEMO,   0                                                       /SET 862
3570    0          0                                                       /SET 863
3571    0          0                                                       /SET 864
3572    0  KC,     0                    /COUNTERS FOR PLATEAU SEARCH        /SET 865
3573    0  KT,     0                                                       /SET 866
3574 3647  LOSCN,  OMGSCN                                                  /SET 867
3575 3370  LPLAT,  PLAT                                                    /SET 868
                                                                           /SET 869
           /SUBROUTINE TO PERFORM COARSE AND FINE OMEGA SCANS              /SET 870
           *3647                                                           /SET 871
3647    0  OMGSCN, 0                                                       /SET 872
3650 1304          TAD NSC             /SET UP COARSE OMEGA SCAN           /SET 873
3651 3136          DCA NS                                                  /SET 874
3652 4407          JMS I LFPT                                              /SET 875
3653 5763          FGET I POMG                                             /SET 876
3654 6103          FPUT OMGC                                               /SET 877
3655 5276          FGET DELK                                               /SET 878
3656 6100          FPUT OMGD                                               /SET 879
3657    0          FEXT                                                    /SET 880
3660 4305          JMS SCAN                                                /SET 881
3661 4407          JMS I LFPT          /SET UP FINE OMEGA SCAN             /SET 882
3662 5106          FGET OMGM                                               /SET 883
3663 6103          FPUT OMGC                                               /SET 884
3664 5301          FGET DELF                                               /SET 885
```

```
3665  6100          FPUT OMGD                                          /SET 886
3666     0          FEXT                                               /SET 887
3667  4305          JMS SCAN                                           /SET 888
3670  4407          JMS I LFPT                                         /SET 889
3671  5130          FGET CMAX                                          /SET 890
3672  4151          FDIV TWO                                           /SET 891
3673  6125          FPUT LIMIT                                         /SET 892
3674     0          FEXT                                               /SET 893
3675  5647          JMP I OMGSCN                                       /SET 894
                                                                       /SET 895
3676  7774  DELK,   7774                  /.04                          /SET 896
3677  2436          2436                                               /SET 897
3700  5605          5605                                               /SET 898
3701  7771  DELF,   7771                  /.005                         /SET 899
3702  2436          2436                                               /SET 900
3703  5605          5605                                               /SET 901
3704    10  NSC,    10                    /CONSTANT FOR OMEGA SCAN      /SET 902
                                                                       /SET 903
            /SCAN OMEGA TO FIND MAXIMUM COUNT                          /SET 904
3705     0  SCAN,   0                                                  /SET 905
3706  1136          TAD NS                /SET STEP COUNTER             /SET 906
3707  7040          CMA                                                /SET 907
3710  3364          DCA KP                                             /SET 908
3711  1136          TAD NS                /COMPUTE OMG                  /SET 909
3712  4471          JMS I LFLT                                         /SET 910
3713  4407          JMS I LFPT                                         /SET 911
3714  3100          FMPY OMGD                                          /SET 912
3715  4151          FDIV TWO                                           /SET 913
3716     6          FNEG                                               /SET 914
3717  1103          FADD OMGC                                          /SET 915
3720  6763          FPUT I POMG                                        /SET 916
3721  5757          FGET I LZERO          /CLEAR CMAX                  /SET 917
3722  6130          FPUT CMAX                                          /SET 918
3723     0          FEXT                                               /SET 919
3724  4762  STEP,   JMS I LMOTST         /START MOTORS                 /SET 920
3725  4567          JMS I LWMOT           /WAIT FOR MOTORS TO STOP.     /SET 921
3726  4760          JMS I LSTCT           /START COUNT                  /SET 922
3727  7773  CT,     -5                                                 /SET 923
3730  4761          JMS I LWTCT           /WAIT FOR COUNT               /SET 924
3731    44          EXP                   /PUT COUNT IN FLOATING PT. ACCUMULATOR.  /SET 925
3732  7402          HLT                   /COUNTING RATE TOO HIGH       /SET 926
3733  4407          JMS I LFPT                                         /SET 927
3734  2130          FSUB CMAX             /COMPARE                      /SET 928
3735     0          FEXT                                               /SET 929
3736  1045          TAD HORD                                           /SET 930
3737  7710          SPA CLA                                            /SET 931
3740  5347          JMP ADV                                            /SET 932
3741  4407          JMS I LFPT            /SUBSTITUTE FOR CMAX         /SET 933
3742  1130          FADD CMAX                                          /SET 934
3743  6130          FPUT CMAX                                          /SET 935
3744  5763          FGET I POMG                                        /SET 936
3745  6106          FPUT OMGM                                          /SET 937
3746     0          FEXT                                               /SET 938
3747  4407  ADV,    JMS I LFPT            /ADVANCE OMEGA               /SET 939
3750  5763          FGET I POMG                                        /SET 940
3751  1100          FADD OMGD                                          /SET 941
3752  6763          FPUT I POMG                                        /SET 942
3753     0          FEXT                                               /SET 943
3754  2364          ISZ KP                /TEST COUNTER                /SET 944
3755  5324          JMP STEP                                           /SET 945
3756  5705          JMP I SCAN            /RETURN                      /SET 946
3757  5107  LZERO,  ZERO                                               /SET 947
3760  2703  LSTCT,  STCT                                               /SET 948
3761  2721  LWTCT,  WTCT                                               /SET 949
3762   517  LMOTST, MOTST                                              /SET 950
3763   627  POMG,   OMG                                                /SET 951
3764     0  KP,     0                     /OMEGA STEP COUNTER          /SET 952
                                                                       /SET 953
            /CB. CALCULATE CARTESIAN TRANSFORMATION MATRIX, BB         /SET 955
            *4000                                                      /SET 956
                                                                       /SET 957
            LOMGA#66                                                   /SET 958
            LFPT#0007                                                  /SET 959
            LCOP#0024                                                  /SET 960
            LFNP#0026                                                  /SET 961
            LFOP#0027                                                  /SET 962
            ONE#0146                                                   /SET 963
            TWO#0151                                                   /SET 964
            COMN#0100                                                  /SET 965
            CSIS#COMN                                                  /SET 966
            SINI#COMN                                                  /SET 967
```

```
                CSB3#COMN                                                       /SET 968
                CS2S#COMN+3                                                     /SET 969
                SIN2#COMN+3                                                     /SET 970
                CS3S#COMN+6                                                     /SET 971
                SIN3#COMN+6                                                     /SET 972
                CSB2#COMN+6                                                     /SET 973
                ALPH#COMN+11                                                    /SET 974
                B3#COMN+11                                                      /SET 975
                COS1#COMN+14                                                    /SET 976
                COS2#COMN+17                                                    /SET 977
                COS3#COMN+22                                                    /SET 978
                B2#COMN+25                                                      /SET 979
                                                                                /SET 980
4000  4426  CALBB,JMS   I      LFNP  /READ WAVELENGTH AND CELL PARAMETERS      /SET 981
4001  7771        -7               /INTO TEMPORARY LOCATIONS ON PAGE ZERO     /SET 982
4002   100        COMN                                                         /SET 983
4003  4424        JMS   I      LCOP  /COPY WAVELENGTH AND A1, A2, A3 INTO      /SET 984
4004  7764        -14              /CURRENT PAGE                              /SET 985
4005   100        COMN                                                         /SET 986
4006  4125        WVL                                                          /SET 987
4007  4407        JMS   I      LFPT                                            /SET 988
4010  5114        FGET         COS1  /STORE SQUARES OF CELL PARAMETER COSINES /SET 989
4011  3114        FMPY         COS1                                            /SET 990
4012  6100        FPUT         CS1S                                            /SET 991
4013  5117        FGET         COS2                                            /SET 992
4014  3117        FMPY         COS2                                            /SET 993
4015  6103        FPUT         CS2S                                            /SET 994
4016  5122        FGET         COS3                                            /SET 995
4017  3122        FMPY         COS3                                            /SET 996
4020  6106        FPUT         CS3S                                            /SET 997
4021  5151        FGET         TWO   /CALCULATE ALPH, SQRT(1-COS1**2-COS2**2   /SET 998
4022  3114        FMPY         COS1  /-COS3**2+2*COS1*COS2*COS3)               /SET 999
4023  3117        FMPY         COS2                                            /SET1000
4024  3122        FMPY         COS3                                            /SET1001
4025  1146        FADD         ONE                                             /SET1002
4026  2100        FSUB         CS1S                                            /SET1003
4027  2103        FSUB         CS2S                                            /SET1004
4030  2106        FSUB         CS3S                                            /SET1005
4031     2        FSQT                                                         /SET1006
4032  6111        FPUT         ALPH                                            /SET1007
4033  5146        FGET         ONE   /CALCULATE SIN1                          /SET1008
4034  2100        FSUB         CS1S                                            /SET1009
4035     2        FSQT                                                         /SET1010
4036  6100        FPUT         SIN1  /SIN1 STILL IN F.A.                      /SET1011
4037  4330        FDIV         A1    /CALCULATE BB11, SIN1/(A1*ALPH)          /SET1012
4040  4111        FDIV         ALPH                                            /SET1013
4041  6341        FPUT         BB11                                            /SET1014
4042  5146        FGET         ONE   /CALCULATE SIN2                          /SET1015
4043  2103        FSUB         CS2S                                            /SET1016
4044     2        FSQT                                                         /SET1017
4045  6103        FPUT         SIN2  /SIN2 STILL IN F.A.                      /SET1018
4046  4333        FDIV         A2    /CALCULATE B2, SIN2/(A2*ALPH)            /SET1019
4047  4111        FDIV         ALPH                                            /SET1020
4050  6125        FPUT         B2                                              /SET1021
4051  5146        FGET         ONE   /CALCULATE SIN3                          /SET1022
4052  2106        FSUB         CS3S                                            /SET1023
4053     2        FSQT                                                         /SET1024
4054  6106        FPUT         SIN3  /SIN3 STILL IN F.A.                      /SET1025
4055  4336        FDIV         A3    /CALCULATE B3, SIN3/(A3*ALPH)            /SET1026
4056  4111        FDIV         ALPH                                            /SET1027
4057  6111        FPUT         B3                                              /SET1028
4060  5122        FGET         COS3  /CALCULATE CSB2,(COS3*COS1-COS2)/        /SET1029
4061  3114        FMPY         COS1  /(SIN3*SIN1)                             /SET1030
4062  2117        FSUB         COS2                                            /SET1031
4063  4106        FDIV         SIN3                                            /SET1032
4064  4100        FDIV         SIN1                                            /SET1033
4065  6106        FPUT         CSB2  /CSB2 STILL IN F.A.                      /SET1034
4066  3111        FMPY         B3    /CALCULATE BB13, B3*CSB2                 /SET1035
4067  6363        FPUT         BB13                                            /SET1036
4070  5114        FGET         COS1  /CALCULATE CSB3,(COS1*COS2-COS3)/(SIN1*SIN2)  /SET1037
4071  3117        FMPY         COS2                                            /SET1038
4072  2122        FSUB         COS3                                            /SET1039
4073  4100        FDIV         SIN1                                            /SET1040
4074  4103        FDIV         SIN2                                            /SET1041
4075  6100        FPUT         CSB3  /CSB3 STILL IN F.A.                      /SET1042
4076  3125        FMPY         B2    /CALCULATE BB12, B2*CSB3                 /SET1043
4077  6352        FPUT         BB12                                            /SET1044
4100  5106        FGET         CSB2  /CALCULATE SNB2                          /SET1045
4101  3106        FMPY         CSB2                                            /SET1046
4102     6        FNEG                                                         /SET1047
4103  1146        FADD         ONE                                             /SET1048
```

```
4104     2        FSQT                 /SNB2 IN F.A.                                  /SETIC49
4105     6        FNEG                 /CALCULATE BB23, -B3*SNB2*COSI                 /SETIC50
4106  3111        FMPY        B3                                                      /SETIC51
4107  3114        FMPY        COSI                                                    /SETIC52
4110  6366        FPUT        BB23                                                    /SETIC53
4111  5100        FGET        CSB3   /CALCULATE SNB3                                  /SETIC54
4112  3100        FMPY        CSB3                                                    /SETIC55
4113     6        FNEG                                                                /SETIC56
4114  1146        FADD        ONE                                                     /SETIC57
4115     2        FSQT                 /SNB3 IN F.A.                                  /SETIC58
4116  3125        FMPY        B2     /CALCULATE BB22, B2*SNB3                         /SETIC59
4117  6355        FPUT        BB22                                                    /SETIC60
4120  5146        FGET        ONE    /CALCULATE BB33, 1/A3                            /SETIC61
4121  4336        FDIV        A3                                                      /SETIC62
4122  6371        FPUT        BB33                                                    /SETIC63
4123     0        FEXT                                                                /SETIC64
4124  5466        JMP    I    LOMGA /RETURN TO WAITING LOOP                           /SETIC65
            *4144                                                                     /SETIC66
4144     0  BB21, 0                   /CONSTANT                                      /SETIC67
4145     0        0                                                                   /SETIC68
4146     0        0                                                                   /SETIC69
4147     0  BB31, 0                   /CONSTANT                                      /SETIC70
4150     0        0                                                                   /SETIC71
4151     0        0                                                                   /SETIC72
            *4160                                                                     /SETIC73
4160     0  BB32, 0                   /CONSTANT                                      /SETIC74
4161     0        0                                                                   /SETIC75
4162     0        0                                                                   /SETIC76
            WVL#4125                                                                  /SETIC77
            A1#WVL+3                                                                  /SETIC78
            A2#A1+3                                                                   /SETIC79
            A3#A2+3                                                                   /SETIC80
            BB11#A3+3                                                                 /SETIC81
            BB12#BB31+3                                                               /SETIC82
            BB22#BB12+3                                                               /SETIC83
            BB13#BB32+3                                                               /SETIC84
            BB23#BB13+3                                                               /SETIC85
            BB33#BB23+3                                                               /SETIC86


            *4200                                                                     /SETIC88
            /CU. CALCULATION OF ORIENTATION MATRIX, M, AND PRODUCT OF THE ORIENTATIO/SETIC89
            /THE CARTESIAN TRANSFORMATION MATRICES.                                   /SETIC90
                                                                                      /SETIC91
            COSD#111                                                                  /SETIC92
            COSC#114                                                                  /SETIC93
            COSP#117                                                                  /SETIC94
            SINO#122                                                                  /SETIC95
            SINP#125                                                                  /SETIC96
            TEM1#130                                                                  /SETIC97
            TEM2#133                                                                  /SETIC98
            COMN#0100                                                                 /SETIC99
            Y2P#COMN                                                                  /SETI100
            T11#COMN                                                                  /SETI101
            Y2S#COMN+11                                                               /SETI102
            BB11#4141                                                                 /SETI103
            LOMGA#66                                                                  /SETI104
            LFPT#0007                                                                 /SETI105
            LMV#0025                                                                  /SETI106
            LFNP#0026                                                                 /SETI107
            LUNT#0030                                                                 /SETI108
            LPRP#0031                                                                 /SETI109
            LTRN#0032                                                                 /SETI110
            LMM#0033                                                                  /SETI111
            THR#0154                                                                  /SETI112
            MTWO#0155                                                                 /SETI113
                                                                                      /SETI114
4200  1155  CALMB,TAD           MTWO      /SET COUNTER                                /SETI115
4201  3355        DCA           MK                                                    /SETI116
4202  1310        TAD           LX11      /STORE LOCATIONS                            /SETI117
4203  3360        DCA           VEC1                                                  /SETI118
4204  1275        TAD           LY2P                                                  /SETI119
4205  3265        DCA           VEC2                                                  /SETI120
4206  1360  MST,  TAD           VEC1                                                  /SETI121
4207  1154        TAD           THR                                                   /SETI122
4210  3361        DCA           VEC1+1                                                /SETI123
4211  1154        TAD           THR                                                   /SETI124
4212  1361        TAD           VEC1+1                                                /SETI125
4213  3362        DCA           VEC1+2                                                /SETI126
4214  4426        JMS    I      LFNP      /READ ORIENTING REFLECTION                  /SETI127
```

```
4215  7772        -6                                                          /SET1128
4216  4333        H1                                                          /SET1129
4217  4407        JMS    I     LFPT     /COMPUTE VECTORS IN ORIENTER SYS.     /SET1130
4220  5347        FGET         CHI                                            /SET1131
4221     4        FCOS                                                        /SET1132
4222  6114        FPUT         COSC                                           /SET1133
4223  5344        FGET         OMG                                            /SET1134
4224     4        FCOS                                                        /SET1135
4225  6111        FPUT         COSO                                           /SET1136
4226  3114        FMPY         COSC                                           /SET1137
4227  6130        FPUT         TEM1     /SAVE PRODUCT OF COS(CHI) AND COS(OMEGA).  /SET1138
4230  5347        FGET         CHI                                            /SET1139
4231     3        FSIN                                                        /SET1140
4232  3111        FMPY         COSO                                           /SET1141
4233  6762        FPUT   I     VEC1+2   /THIRD COMPONENT OF VECTOR # SIN(CHI)*COS(OME/SET1142
4234  5352        FGET         PHI                                            /SET1143
4235     4        FCOS                                                        /SET1144
4236  6117        FPUT         COSP                                           /SET1145
4237  5344        FGET         OMG                                            /SET1146
4240     3        FSIN                                                        /SET1147
4241  6122        FPUT         SINO                                           /SET1148
4242  3117        FMPY         COSP                                           /SET1149
4243  6133        FPUT         TEM2     /STORE SIN(OMEGA)*COS(PHI).           /SET1150
4244  5352        FGET         PHI                                            /SET1151
4245     3        FSIN                                                        /SET1152
4246  6125        FPUT         SINP                                           /SET1153
4247  3130        FMPY         TEM1                                           /SET1154
4250  1133        FADD         TEM2                                           /SET1155
4251  6761        FPUT   I     VEC1+1   /2ND COMPONENT # SIN(PHI)*COS(CHI)*COS(OMEGA)/SET1156
4252  5122        FGET         SINO     /                 +COS(PHI)*SIN(OMEGA).  /SET1157
4253  3125        FMPY         SINP                                           /SET1158
4254  6133        FPUT         TEM2     /STORE SIN(OMEGA)*SIN(PHI).           /SET1159
4255  5117        FGET         COSP                                           /SET1160
4256  3130        FMPY         TEM1                                           /SET1161
4257  2133        FSUB         TEM2                                           /SET1162
4260  6760        FPUT   I     VEC1     /FIRST COMPONENT # COS(PHI)*COS(CHI)*COS(OMEG/SET1163
4261     0        FEXT                  /                  -SIN(PHI)*SIN(OMEGA).  /SET1164
4262  4425        JMS    I     LMV      /COMPUTE VECTOR IN CRYSTAL SYSTEM     /SET1165
4263  4141        BB11                                                        /SET1166
4264  4333        H1                                                          /SET1167
4265     0  VEC2, 0                     /VARIABLE ADDRESS                     /SET1168
4266  1311        TAD          LY1S     /ADVANCE ADDRESSES TO LOCATIONS       /SET1169
4267  3360        DCA          VEC1     /FOR SECONDARY VECTORS                /SET1170
4270  1301        TAD          LY2S                                           /SET1171
4271  3265        DCA          VEC2                                           /SET1172
4272  2355        ISZ          MK       /TEST COUNTER                         /SET1173
4273  5206        JMP          MST      /REPEAT FOR SECONDARY REFLECTION      /SET1174
4274  4430        JMS    I     LUNT                                           /SET1175
4275   100  LY2P, Y2P                   /USED AS CONSTANT                     /SET1176
4276  4333        XI11                   /FIRST COLUMN OF MATRIX XI            /SET1177
4277  4431        JMS    I     LPRP     /COMPUTE MATRIX XI                    /SET1178
4300  4333        XI11                                                        /SET1179
4301   111  LY2S, Y2S                   /PERP WILL COPY Y2S ONTO ITSELF       /SET1180
4302  4355        XI13                   /IN COMMON                            /SET1181
4303  4431        JMS    I     LPRP                                           /SET1182
4304  4355        XI13                                                        /SET1183
4305  4333        XI11                                                        /SET1184
4306  4344        XI12                                                        /SET1185
4307  4431        JMS    I     LPRP     /COMPUTE MATRIX X                     /SET1186
4310  7600  LX11, X11                                                        /SET1187
4311  7611  LY1S, Y1S                                                        /SET1188
4312  7622        X13                                                         /SET1189
4313  4431        JMS    I     LPRP                                           /SET1190
4314  7622        X13                                                         /SET1191
4315  7600        X11                                                         /SET1192
4316  7611        X12                                                         /SET1193
4317  4432        JMS    I     LTRN     /TRANSPOSE XI                         /SET1194
4320  4333        XI11                                                        /SET1195
4321   100        T11                                                         /SET1196
4322  4433        JMS    I     LMM      /COMPUTE ORIENTATION                  /SET1197
4323  7600        X11                    /MATRIX, M#X*T                        /SET1198
4324   100        T11                                                         /SET1199
4325  4333        M11                                                         /SET1200
4326  4433        JMS    I     LMM      /COMPUTE PRODUCT OF M AND BB          /SET1201
4327  4333        M11                                                         /SET1202
4330  4141        BB11                                                        /SET1203
4331  7600        MB11                                                        /SET1204
4332  5466        JMP    I     LOMGA                                          /SET1205
            H1#4333                                                           /SET1206
            XI11#H1                                                           /SET1207
            M11#H1                                                            /SET1208
```

```
          H2#H1+3                                                          /SET1209
          XI21#H2                                                          /SET1210
          M21#H2                                                           /SET1211
          H3#H2+3                                                          /SET1212
          XI31#H3                                                          /SET1213
          M31#H3                                                           /SET1214
          OMG#H3+3                                                         /SET1215
          XI12#OMG                                                         /SET1216
          M12#OMG                                                          /SET1217
          CHI#OMG+3                                                        /SET1218
          XI22#CHI                                                         /SET1219
          M22#CHI                                                          /SET1220
          PHI#CHI+3                                                        /SET1221
          XI32#PHI                                                         /SET1222
          M32#PHI                                                          /SET1223
          MK#PHI+3                                                         /SET1224
          XI13#MK                                                          /SET1225
          M13#MK                                                           /SET1226
          VEC1#MK+3                                                        /SET1227
          XI23#VEC1                                                        /SET1228
          M23#VEC1                                                         /SET1229
          XI33#VEC1+3                                                      /SET1230
          M33#XI33                                                         /SET1231
          X11#7600                                                         /SET1232
          MB11#X11                                                         /SET1233
          Y1S#7611                                                         /SET1234
          X12#Y1S                                                          /SET1235
          MB12#Y1S                                                         /SET1236
          X13#7622                                                         /SET1237
          MB13#X13                                                         /SET1238


          /CALCULATE TWO THETA, CHI, AND PHI.                              /SET1240
          *4400                                                            /SET1241
          LMV#25                                                           /SET1242
          LFPT#7                                                           /SET1243
          TWO#151                                                          /SET1244
          ONE#146                                                          /SET1245
          VPH1#100                                                         /SET1246
          VPH2#103                                                         /SET1247
          VPH3#106                                                         /SET1248
          ATEMP#111                                                        /SET1249
          SINT#114                                                         /SET1250
          COST#117                                                         /SET1251
          MB11#7600                                                        /SET1252
                                                                           /SET1253
4400    0 ANG, 0                                                           /SET1254
4401 4425       JMS   I     LMV   /COMPUTE PLANE NORMAL                    /SET1255
4402 7600       MB11                                                       /SET1256
4403 4454       FH                                                         /SET1257
4404  100       VPH1              /STORE VECTOR IN COMMON                  /SET1258
4405 4407       JMS   I     LFPT  /CALCULATE PHI ARTN(VPH2/VPH1)           /SET1259
4406 5100       FGET        VPH1                                           /SET1260
4407 6653       FPUT  I     LB                                             /SET1261
4410 5103       FGET        VPH2                                           /SET1262
4411    5       FATN                                                       /SET1263
4412 6276       FPUT        CPHI                                           /SET1264
4413 5100       FGET        VPH1  /COMPUTE CHI                             /SET1265
4414 3100       FMPY        VPH1                                           /SET1266
4415 6111       FPUT        ATEMP /STORE VPH1**2                           /SET1267
4416 5103       FGET        VPH2                                           /SET1268
4417 3103       FMPY        VPH2                                           /SET1269
4420 1111       FADD        ATEMP                                          /SET1270
4421 6111       FPUT        ATEMP /VPH1**2+VPH2**2                         /SET1271
4422    2       FSQT                                                       /SET1272
4423 6653       FPUT  I     LB                                             /SET1273
4424 5106       FGET        VPH3                                           /SET1274
4425    5       FATN              /CHI#ARTN(VPH3/SQRT(VPH1**2+VPH2**2))   /SET1275
4426 6273       FPUT        CCHI                                           /SET1276
4427 5106       FGET        VPH3                                           /SET1277
4430 3106       FMPY        VPH3                                           /SET1278
4431 1111       FADD        ATEMP /VPH1**2+VPH2**2+VPH3**2                 /SET1279
4432    2       FSQT                                                       /SET1280
4433 3652       FMPY  I     LWVL                                           /SET1281
4434 4151       FDIV        TWO                                            /SET1282
4435 6114       FPUT        SINT  /SIN(THETA)                              /SET1283
4436 3114       FMPY        SINT                                           /SET1284
4437 6111       FPUT        ATEMP                                          /SET1285
4440 5146       FGET        ONE                                            /SET1286
4441 2111       FSUB        ATEMP                                          /SET1287
```

```
4442     2        FSQT                                                    /SET1288
4443  6653        FPUT   I     LB     /STORE COS(THETA)                   /SET1289
4444  5114        FGET         SINT                                       /SET1290
4445     5        FATN                /THETA                              /SET1291
4446  3151        FMPY         TWO                                        /SET1292
4447  6265        FPUT         CTTH   /2THETA                             /SET1293
4450     0        FEXT                                                    /SET1294
4451  5600        JMP    I     ANG    /RETURN                             /SET1295
4452  4125  LWVL, 4125                                                    /SET1296
4453  5507  LB,    5507                                                   /SET1297
4454     0  FH,   0                   /VARIABLES                          /SET1298
4455     0        0                                                       /SET1299
4456     0        0                                                       /SET1300
4457     0  FK,   0                                                       /SET1301
4460     0        0                                                       /SET1302
4461     0        0                                                       /SET1303
4462     0  FL,   0                                                       /SET1304
4463     0        0                                                       /SET1305
4464     0        0                                                       /SET1306
4465     0  CTTH, 0                                                       /SET1307
4466     0        0                                                       /SET1308
4467     0        0                                                       /SET1309
4470     0  COMG, 0                                                       /SET1310
4471     0        0                                                       /SET1311
4472     0        0                                                       /SET1312
4473     0  CCHI, 0                                                       /SET1313
4474     0        0                                                       /SET1314
4475     0        0                                                       /SET1315
4476     0  CPHI, 0                                                       /SET1316
4477     0        0                                                       /SET1317
4500     0        0                                                       /SET1318
```

```
/AZIMUTHAL SCANS                                                          /AZS   1
                                                                          /AZS   2
BATN#5507                                                                 /AZS   3
COUNT#170                                                                 /AZS   4
CTERR#2670                                                                /AZS   5
CTHI#2671                                                                 /AZS   6
DPIOUT#7505                                                               /AZS   7
FACTOR#2426                                                               /AZS   8
FP500#2433                                                                /AZS   9
HORD#45                                                                   /AZS  10
K90#5523                                                                  /AZS  11
LCOP#24                                                                   /AZS  12
LCRLF#165                                                                 /AZS  13
LFNK#5                                                                    /AZS  14
LFOP#27                                                                   /AZS  15
LFPT#7                                                                    /AZS  16
LMM#33                                                                    /AZS  17
LOMGA#66                                                                  /AZS  18
LOPCH#70                                                                  /AZS  19
LRTMI#166                                                                 /AZS  20
LVFOUT#2425                                                               /AZS  21
LWHERE#145                                                                /AZS  22
LWMOT#167                                                                 /AZS  23
MOTST#517                                                                 /AZS  24
OMGA#210                                                                  /AZS  25
ONE#146                                                                   /AZS  26
R11#103                                                                   /AZS  27
R21#R11+3                                                                 /AZS  28
R31#R21+3                                                                 /AZS  29
R12#R31+3                                                                 /AZS  30
R22#R12+3                                                                 /AZS  31
R32#R22+3                                                                 /AZS  32
R13#R32+3                                                                 /AZS  33
R23#R13+3                                                                 /AZS  34
R33#R23+3                                                                 /AZS  35
REC#2400                                                                  /AZS  36
RTMSV#617                                                                 /AZS  37
RTOFF#3767                                                                /AZS  38
SINC#100                                                                  /AZS  39
STCT#2703                                                                 /AZS  40
T#4333                                                                    /AZS  41
THTA#100                                                                  /AZS  42
TWO#151                                                                   /AZS  43
WTCT#2721                                                                 /AZS  44
                                                                          /AZS  45
TTH#624                                                                   /AZS  46
OMG#627                                                                   /AZS  47
```

```
          CHI#OMG+3                                                          /AZS  48
          PHI#CHI+3                                                          /AZS  49
                                                                             /AZS  50
          *640                                                               /AZS  51
          /RETURN TO RATEMETER AFTER COMPUTING ANGLES                        /AZS  52
640  4652 RETN,    JMS I LOTEST        /TEST ANGLES                          /AZS  53
641  5315          JMP BIG             /OMEGA TOO BIG, SET TO SUBTRACT 180 FROM OM/AZS  54
642  7410          SKP                 /TOO SMALL, SET TO ADD 180 TO OMG     /AZS  55
643  5335          JMP OK              /OK. START MOTORS                     /AZS  56
644  1327          TAD ADD                                                   /AZS  57
645  5316          JMP BIG+1                                                 /AZS  58
646    10 C180,    0010                /180.                                 /AZS  59
647  2640          2640                                                      /AZS  60
650     0          0000                                                      /AZS  61
651  1344 LPATI,   PATI                                                      /AZS  62
652  7633 LOTEST,  OTEST                                                     /AZS  63
653  2246 SUBTR,   FSUB C180           /CONSTANT FOR VARIABLE INSTRUCTION    /AZS  64
                                                                             /AZS  65
          *654                                                               /AZS  66
          /RZ. RATEMETER FOR AZIMUTHAL SCANS                                 /AZS  67
654  7001 STRRTM, IAC                 /SET RATEMETER ON INDICATOR           /AZS  68
655  3370         DCA RNI                                                    /AZS  69
656  1217         TAD RTMSV           /SET TIME FOR COUNTING                /AZS  70
657  3267         DCA RTMC                                                   /AZS  71
660  4407         JMS I LFPT          /SET SCALING FACTOR                   /AZS  72
661  5760         FGET I LFACSV                                              /AZS  73
662  6761         FPUT I LFACTR                                              /AZS  74
663     0         FEXT                                                       /AZS  75
664  7040         CMA                 /WORD COUNTER # -1                    /AZS  76
665  3354         DCA WDK                                                    /AZS  77
666  4762 RATE1,  JMS I LSTCT         /START COUNT                          /AZS  78
667     0 RTMC,   0                                                          /AZS  79
670  4545         JMS I LWHERE        /GET CURRENT POSITION                 /AZS  80
671  4763         JMS I LWTCT         /WAIT FOR COUNT                       /AZS  81
672   170         COUNT                                                      /AZS  82
673  7000         NOP                 /IGNORE ERROR RETURN                  /AZS  83
674  1352 RATE2,  TAD TYPE            /TEST TYPE INDICATOR                  /AZS  84
675  7650         SNA CLA                                                    /AZS  85
676  5314         JMP RATE4           /DO NOT TYPE                          /AZS  86
677  2354         ISZ WDK             /TEST WORD COUNTER                    /AZS  87
700  5307         JMP RATE3                                                  /AZS  88
701  1355         TAD WDKK            /RESET WORD COUNTER                   /AZS  89
702  3354         DCA WDK                                                    /AZS  90
703  4565         JMS I LCRLF         /PRINT CR,LF                          /AZS  91
704  4427         JMS I LFOP          /PRINT PSI                            /AZS  92
705  7777         -1                                                         /AZS  93
706  3644         PSI                                                        /AZS  94
707  1764 RATE3,  TAD I LCTER         /TEST FOR COUNT TOO HIGH              /AZS  95
710  7640         SZA CLA                                                    /AZS  96
711  5346         JMP RATE6           /ERROR                                /AZS  97
712  4765         JMS I LDPIOT        /NO ERROR, PRINT COUNT                /AZS  98
713  2671         CTHI                                                       /AZS  99
714  5651 RATE4,  JMP I LPATI         /JUMP TO COMPUTE ANGLES               /AZS 100
715  1253 BIG,    TAD SUBTR           /ADJUST ANGLES IF REQUIRED. SET TO SUBTRACT/AZS 101
716  3321         DCA VARI            /FROM OMEGA                           /AZS 102
717  4407         JMS I LFPT                                                 /AZS 103
720  5227         FGET OMG            /OMG#OMG+(OR -)180                    /AZS 104
721     0 VARI,   0                   /VARIABLE INSTRUCTION, FADD C180 OR FSUB C1/AZS 105
722  6227         FPUT OMG                                                   /AZS 106
723  5232         FGET CHI            /CHI#-CHI                             /AZS 107
724     6         FNEG                                                       /AZS 108
725  6232         FPUT CHI                                                   /AZS 109
726  5235         FGET PHI            /PHI#PHI+180                          /AZS 110
727  1246 ADD,    FADD C180                                                  /AZS 111
730  6235         FPUT PHI                                                   /AZS 112
731     0         FEXT                                                       /AZS 113
732  4652         JMS I LOTEST        /TEST ANGLES AGAIN                    /AZS 114
733  5757         JMP I LRTOF         /TOO BIG. TURN OFF RATEMETER          /AZS 115
734  5757         JMP I LRTOF         /TOO SMALL. TURN OFF RATEMETER        /AZS 116
735  4766 OK,     JMS I LMOTST        /OK. START MOTORS                     /AZS 117
736  1353         TAD CHART           /TEST CHART INDICATOR                 /AZS 118
737  7650         SNA CLA                                                    /AZS 119
740  5344         JMP RATE5           /DO NOT CHART                         /AZS 120
741  1764         TAD I LCTER         /TEST ERROR INDICATOR                 /AZS 121
742  7650         SNA CLA             /IF ERROR, DO NOT CHART               /AZS 122
743  4767         JMS I LREC          /CHART COUNT                          /AZS 123
744  4567 RATE5,  JMS I LWMOT         /WAIT FOR MOTORS TO STOP              /AZS 124
745  5266         JMP RATE1           /RETURN FOR NEXT COUNT                /AZS 125
746  1356 RATE6,  TAD ASTK            /IF ERROR, PRINT *                    /AZS 126
747  4470         JMS I LOPCH                                                /AZS 127
750  5314         JMP RATE4                                                  /AZS 128
```

```
 751     0  NSTP,    0                                                          /AZS 129
 752     0  TYPE,    0                                                          /AZS 130
 753     0  CHART,   0                                                          /AZS 131
 754     0  WDK,     0                                                          /AZS 132
 755  7766  WDKK,    -12                                                        /AZS 133
 756   252  ASTK,    252                                                        /AZS 134
 757  3767  LRTOF,   RTOFF                                                      /AZS 135
 760  2564  LFACSV,  FACSV                                                      /AZS 136
 761  2426  LFACTR,  FACTOR                                                     /AZS 137
 762  2703  LSTCT,   STCT                                                       /AZS 138
 763  2721  LWTCT,   WTCT                                                       /AZS 139
 764  2670  LCTER,   CTERR                                                      /AZS 140
 765  7505  LDPIOT,  DPIOUT                                                     /AZS 141
 766   517  LMOTST,  MOTST                                                      /AZS 142
 767  2400  LREC,    REC                                                        /AZS 143
 770     0  RNI,     0                                                          /AZS 144
                                                                                /AZS 145
            *1344                                                               /AZS 146
            /CONTINUED FROM AZIMUTHAL RATEMETER                                 /AZS 147
1344  4433  PAT1,    JMS I LMM          /MULTIPLY R MATRIX BY PSI MATRIX        /AZS 148
1345  3052           ZR11                                                       /AZS 149
1346   103           R11                                                        /AZS 150
1347  4333           T                                                          /AZS 151
1350  4424           JMS I LCOP         /COPY PRODUCT INTO R                    /AZS 152
1351  7745           -33                                                        /AZS 153
1352  4333           T                                                          /AZS 154
1353   103           R11                                                        /AZS 155
1354  5755           JMP I LPAT2        /JUMP                                   /AZS 156
1355  3105  LPAT2,   PAT2                                                       /AZS 157
                                                                                /AZS 158
            *2155                                                               /AZS 159
2155     0           0000                                                       /AZS 160
2156   210           OMGA                                                       /AZS 161
            *2233                                                               /AZS 162
2233     0           0000                                                       /AZS 163
2234   210           OMGA                                                       /AZS 164
2235     0           0000                                                       /AZS 165
2236   210           OMGA                                                       /AZS 166
2237     0           0000                                                       /AZS 167
2240   210           OMGA                                                       /AZS 168
2241     0           0000                                                       /AZS 169
2242   210           OMGA                                                       /AZS 170
2243     0           0000                                                       /AZS 171
2244   210           OMGA                                                       /AZS 172
2245     0           0000                                                       /AZS 173
2246   210           OMGA                                                       /AZS 174
2247  2323           2323               /SS. SET SCALE FOR CHART RECORDER       /AZS 175
2250  2551           SETSCL                                                     /AZS 176
2251  2023           2023               /PS. PRINT SCALE OF CHART RECORDER      /AZS 177
2252  2567           PRSCAL                                                     /AZS 178
2253  2332           2332               /SZ. SET UP PSI MATRIX                  /AZS 179
2254  3025           PSIM                                                       /AZS 180
            *2261                                                               /AZS 181
2261   132           0132               /AZ. SET UP MATRIX R                    /AZS 182
2262  3600           AZIM                                                       /AZS 183
2263  2232           2232               /RZ. TURN ON AZIMUTHAL RATEMETER        /AZS 184
2264   654           STRRTM                                                     /AZS 185
                                                                                /AZS 186
            *2551                                                               /AZS 187
            /SS. READ NUMBER OF PULSES WHICH IS TO BE FULL SCALE ON CHART RECORDER /AZS 188
2551  4405  SETSCL,  JMS I LFNK         /READ NUMBER                            /AZS 189
2552  4407           JMS I LFPT         /COMPUTE SCALE FACTOR, 500/NUMBER       /AZS 190
2553  6361           FPUT SCALE                                                 /AZS 191
2554  5233           FGET FP500                                                 /AZS 192
2555  4361           FDIV SCALE                                                 /AZS 193
2556  6364           FPUT FACSV                                                 /AZS 194
2557     0           FEXT                                                       /AZS 195
2560  5566           JMP I LRTMI        /RETURN TO TEST IF RATEMETER IS ON      /AZS 196
2561     0  SCALE,   0                                                          /AZS 197
2562     0           0                                                          /AZS 198
2563     0           0                                                          /AZS 199
2564     0  FACSV,   0                                                          /AZS 200
2565     0           0                                                          /AZS 201
2566     0           0                                                          /AZS 202
                                                                                /AZS 203
            /PS. PRINT SCALE                                                    /AZS 204
2567  4407  PRSCAL,  JMS I LFPT                                                 /AZS 205
2570  5361           FGET SCALE                                                 /AZS 206
2571     0           FEXT                                                       /AZS 207
2572  4625           JMS I LVFOUT                                               /AZS 208
2573     7           7                                                          /AZS 209
```

```
2574     0          0                                                    /AZS 210
2575  5566          JMP I LRTMI          /RETURN TO TEST IF RATEMETER IS ON.  /AZS 211
                                                                          /AZS 212
                                                                          /AZS 213
                                                                          /AZS 214
            *3000                                                         /AZS 215
            /SUBROUTINE TO SET UP MATRIX TO ROTATE ABOUT Z-AXIS           /AZS 216
3000     0  ZROT,   0                                                     /AZS 217
3001  1600          TAD I ZROT           /PICK UP ANGLE                   /AZS 218
3002  3271          DCA ZR32                                              /AZS 219
3003  2200          ISZ ZROT             /SET RETURN                      /AZS 220
3004  4407          JMS I LFPT           /COMPUTE MATRIX                  /AZS 221
3005  5671          FGET I ZR32          /ZR11#COS(ANGLE)                 /AZS 222
3006     4          FCOS                                                  /AZS 223
3007  6252          FPUT ZR11                                             /AZS 224
3010  6266          FPUT ZR22            /ZR22#COS(ANGLE)                 /AZS 225
3011  5671          FGET I ZR32          /ZR12#SIN(ANGLE)                 /AZS 226
3012     3          FSIN                                                  /AZS 227
3013  6263          FPUT ZR12                                             /AZS 228
3014     6          FNEG                                                  /AZS 229
3015  6255          FPUT ZR21            /ZR21#-SIN(ANGLE)                /AZS 230
3016  5260          FGET ZR31            /ZR31 AND ZR13 ARE CONSTANTLY ZERO  /AZS 231
3017  6271          FPUT ZR32            /ZR32#0                          /AZS 232
3020  6277          FPUT ZR23            /ZR23#0                          /AZS 233
3021  5146          FGET ONE             /ZR33#1                          /AZS 234
3022  6302          FPUT ZR33                                             /AZS 235
3023     0          FEXT                                                  /AZS 236
3024  5600          JMP I ZROT                                            /AZS 237
                                                                          /AZS 238
            /SZ. SET UP PSI MATRIX                                        /AZS 239
3025  4405  PSIM,   JMS I LFNK           /READ INCREMENT FOR PSI          /AZS 240
3026  4407          JMS I LFPT           /COMPUTE PSI MATRIX              /AZS 241
3027  6247          FPUT DPSI                                             /AZS 242
3030     4          FCOS                                                  /AZS 243
3031  6266          FPUT ZR22            /ZR22 # COS(DPSI)                /AZS 244
3032  6302          FPUT ZR33            /ZR33 # COS(DPSI)                /AZS 245
3033  5247          FGET DPSI                                             /AZS 246
3034     3          FSIN                                                  /AZS 247
3035  6277          FPUT ZR23            /ZR23 # SIN(DPSI)                /AZS 248
3036     6          FNEG                                                  /AZS 249
3037  6271          FPUT ZR32            /ZR32 # -SIN(DPSI)               /AZS 250
3040  5146          FGET ONE                                              /AZS 251
3041  6252          FPUT ZR11            /ZR11 # 1                        /AZS 252
3042  5260          FGET ZR31            /ZR31 AND ZR13 ARE CONSTANTLY ZERO  /AZS 253
3043  6255          FPUT ZR21            /ZR21#0                          /AZS 254
3044  6263          FPUT ZR12            /ZR12#0                          /AZS 255
3045     0          FEXT                                                  /AZS 256
3046  5466          JMP I LOMGA                                           /AZS 257
3047     0  DPSI,   0                                                     /AZS 258
3050     0          0                                                     /AZS 259
3051     0          0                                                     /AZS 260
3052     0  ZR11,   0                                                     /AZS 261
3053     0          0                                                     /AZS 262
3054     0          0                                                     /AZS 263
3055     0  ZR21,   0                                                     /AZS 264
3056     0          0                                                     /AZS 265
3057     0          0                                                     /AZS 266
3060     0  ZR31,   0                    /CONSTANT                       /AZS 267
3061     0          0                                                     /AZS 268
3062     0          0                                                     /AZS 269
3063     0  ZR12,   0                                                     /AZS 270
3064     0          0                                                     /AZS 271
3065     0          0                                                     /AZS 272
3066     0  ZR22,   0                                                     /AZS 273
3067     0          0                                                     /AZS 274
3070     0          0                                                     /AZS 275
3071     0  ZR32,   0                                                     /AZS 276
3072     0          0                                                     /AZS 277
3073     0          0                                                     /AZS 278
3074     0  ZR13,   0                    /CONSTANT                       /AZS 279
3075     0          0                                                     /AZS 280
3076     0          0                                                     /AZS 281
3077     0  ZR23,   0                                                     /AZS 282
3100     0          0                                                     /AZS 283
3101     0          0                                                     /AZS 284
3102     0  ZR33,   0                                                     /AZS 285
3103     0          0                                                     /AZS 286
3104     0          0                                                     /AZS 287
                                                                          /AZS 288
            /SECOND CONTINUATION FROM RATEMETER, CALCULATION OF ANGLES    /AZS 289
3105  4407  PAT2,   JMS I LFPT                                            /AZS 290
```

```
3106  5766          FGET I LPSI        /PSI # PSI+DPSI                          /AZS 291
3107  1247          FADD DPSI                                                   /AZS 292
3110  6766          FPUT I LPSI                                                 /AZS 293
3111  5133          FGET R33           /SIN(CHI) # SQRTF(R31**2+R32**2)         /AZS 294
3112  6767          FPUT I ADRB        /CHI # ARCTAN(SIN(CHI)/R33)              /AZS 295
3113  5111          FGET R31                                                    /AZS 296
3114  3111          FMPY R31                                                    /AZS 297
3115  6100          FPUT SINC                                                   /AZS 298
3116  5122          FGET R32                                                    /AZS 299
3117  3122          FMPY R32                                                    /AZS 300
3120  1100          FADD SINC                                                   /AZS 301
3121     2          FSQT                                                        /AZS 302
3122  6100          FPUT SINC                                                   /AZS 303
3123     5          FATN                                                        /AZS 304
3124  6775          FPUT I ACHI                                                 /AZS 305
3125  5100          FGET SINC          /IS SIN(CHI) LESS THAN .00004            /AZS 306
3126  2371          FSUB KSPEC                                                  /AZS 307
3127     0          FEXT                                                        /AZS 308
3130  1045          TAD HORD                                                    /AZS 309
3131  7710          SPA CLA                                                     /AZS 310
3132  5353          JMP SPEC           /YES. SPECIAL CASE                       /AZS 311
3133  4407          JMS I LFPT         /NO. PHI # ARCTAN(-R32/-R31)             /AZS 312
3134  5111          FGET R31                                                    /AZS 313
3135     6          FNEG                                                        /AZS 314
3136  6767          FPUT I ADRB                                                 /AZS 315
3137  5122          FGET R32                                                    /AZS 316
3140     6          FNEG                                                        /AZS 317
3141     5          FATN                                                        /AZS 318
3142  6774          FPUT I APHI                                                 /AZS 319
3143  5125          FGET R13           /OMEGA # ARCTAN(-R23/R13)                /AZS 320
3144  6767          FPUT I ADRB                                                 /AZS 321
3145  5130          FGET R23                                                    /AZS 322
3146     6          FNEG                                                        /AZS 323
3147     5          FATN                                                        /AZS 324
3150  6776          FPUT I AOMG                                                 /AZS 325
3151     0          FEXT                                                        /AZS 326
3152  5770          JMP I LRETN        /RETURN TO RATEMETER                     /AZS 327
3153  4407  SPEC,   JMS I LFPT         /SPECIAL CASE. PHI # ARCTAN(-R11/R12)    /AZS 328
3154  5114          FGET R12                                                    /AZS 329
3155  6767          FPUT I ADRB                                                 /AZS 330
3156  5103          FGET R11                                                    /AZS 331
3157     6          FNEG                                                        /AZS 332
3160     5          FATN                                                        /AZS 333
3161  6774          FPUT I APHI                                                 /AZS 334
3162  5777          FGET I LK90        /OMEGA # 90                              /AZS 335
3163  6776          FPUT I AOMG                                                 /AZS 336
3164     0          FEXT                                                        /AZS 337
3165  5770          JMP I LRETN        /RETURN TO RATEMETER                     /AZS 338
3166  3644  LPSI,   PSI                                                         /AZS 339
3167  5507  ADRB,   BATN                                                        /AZS 340
3170   640  LRETN,  RETN                                                        /AZS 341
3171  7762  KSPEC,  7762               /.00004                                  /AZS 342
3172  2476          2476                                                        /AZS 343
3173  1326          1326                                                        /AZS 344
3174   635  APHI,   PHI                                                         /AZS 345
3175   632  ACHI,   CHI                                                         /AZS 346
3176   627  AOMG,   OMG                                                         /AZS 347
3177  5523  LK90,   K90                                                         /AZS 348
                                                                                /AZS 349
        *3600                                                                   /AZS 350
        /AZ. SET UP MATRIX R                                                    /AZS 351
3600  4545  AZIM,   JMS I LWHERE       /SET FLOATING POINT ANGLES TO CURRENT POSIT/AZS 352
3601  4427          JMS I LFOP         /PRINT CURRENT ANGLES                    /AZS 353
3602  7774          -4                                                          /AZS 354
3603   624          TTH                                                         /AZS 355
3604  4766          JMS I LZROT        /SET UP OMEGA MATRIX                     /AZS 356
3605   627          OMG                                                         /AZS 357
3606  4407          JMS I LFPT         /SET UP CHI MATRIX                       /AZS 358
3607  5765          FGET I LCHI                                                 /AZS 359
3610     4          FCOS                                                        /AZS 360
3611  6103          FPUT R11           /R11#COS(CHI)                            /AZS 361
3612  6133          FPUT R33           /R33#COS (CHI)                           /AZS 362
3613  5765          FGET I LCHI                                                 /AZS 363
3614     3          FSIN                                                        /AZS 364
3615  6125          FPUT R13           /R13#SIN(CHI)                            /AZS 365
3616     6          FNEG                                                        /AZS 366
3617  6111          FPUT R31           /R31#-SIN(CHI)                           /AZS 367
3620  5146          FGET ONE                                                    /AZS 368
3621  6117          FPUT R22           /R22#1                                   /AZS 369
3622  2146          FSUB ONE                                                    /AZS 370
3623  6106          FPUT R21           /R21#0                                   /AZS 371
```

```
3624  6114          FPUT R12          /R12#0                                  /AZS 372
3625  6122          FPUT R32          /R32#0                                  /AZS 373
3626  6130          FPUT R23          /R23#0                                  /AZS 374
3627  6244          FPUT PSI          /PSI#0                                  /AZS 375
3630     0          FEXT                                                      /AZS 376
3631  4433          JMS I LMM         /COMPUTE PRODUCT OF OMEGA AND CHI MATRICES /AZS 377
3632  3052          ZR11                                                      /AZS 378
3633   103          R11                                                       /AZS 379
3634  4333          T                                                         /AZS 380
3635  4766          JMS I LZROT       /SET UP PHI MATRIX                      /AZS 381
3636   635          PHI                                                       /AZS 382
3637  4433          JMS I LMM         /MULTIPLY PHI MATRIX BY PRODUCT OF OMEGA AN/AZS 383
3640  4333          T                 /MATRICES TO GET R MATRIX               /AZS 384
3641  3052          ZR11                                                      /AZS 385
3642   103          R11                                                       /AZS 386
3643  5466          JMP I LOMGA       /RETURN TO WAITING LOOP                 /AZS 387
3644     0  PSI,    0                                                         /AZS 388
3645     0          0                                                         /AZS 389
3646     0          0                                                         /AZS 390
            *3765                                                             /AZS 391
3765   632  LCHI,   CHI                                                       /AZS 392
3766  3000  LZROT,  ZROT                                                      /AZS 393
                                                                              /AZS 394
            /TEST OF OMEGA IN BISECTING POSITION                              /AZS 395
            *7633                                                             /AZS 396
7633     0  OTEST,  0                                                         /AZS 397
7634  4407          JMS I LFPT        /OMG + THETA -B                         /AZS 398
7635  5667          FGET I ADTTH                                              /AZS 399
7636  4151          FDIV TWO                                                  /AZS 400
7637  6100          FPUT THTA                                                 /AZS 401
7640  1660          FADD I ADOMG                                              /AZS 402
7641  2264          FSUB DOK                                                  /AZS 403
7642     0          FEXT                                                      /AZS 404
7643  1045          TAD HORD                                                  /AZS 405
7644  7700          SMA CLA                                                   /AZS 406
7645  5633          JMP I OTEST       /TOO LARGE                              /AZS 407
7646  2233          ISZ OTEST                                                 /AZS 408
7647  4407          JMS I LFPT        /OMG - THETA - D                        /AZS 409
7650  5660          FGET I ADOMG                                              /AZS 410
7651  2100          FSUB THTA                                                 /AZS 411
7652  2261          FSUB BOK                                                  /AZS 412
7653     0          FEXT                                                      /AZS 413
7654  1045          TAD HORD                                                  /AZS 414
7655  7700          SMA CLA           /SKIP IF MINUS. TOO SMALL               /AZS 415
7656  2233          ISZ OTEST         /OK                                     /AZS 416
7657  5633          JMP I OTEST                                               /AZS 417
7660   627  ADOMG,  OMG                                                       /AZS 418
7661     6  BOK,    0006              /-47                                    /AZS 419
7662  5040          5040                                                      /AZS 420
7663     0          0000                                                      /AZS 421
7664     6  DOK,    0006              /+47                                    /AZS 422
7665  2740          2740                                                      /AZS 423
7666     0          0000                                                      /AZS 424
7667   624  ADTTH,  TTH                                                       /AZS 425
                                                                              /AZS 426


            /TEST OF OMEGA IN PARALLEL POSITION FOR AZIMUTHAL SCANS           /AZP   1
            LFPT#7                                                            /AZP   2
            TWO#151                                                           /AZP   3
            THTA#100                                                          /AZP   4
            HORD#45                                                           /AZP   5
            TTH#624                                                           /AZP   6
            OMG#627                                                           /AZP   7
            *7633                                                             /AZP   8
7633     0  OTEST,  0                                                         /AZP   9
7634  4407          JMS I LFPT        /THETA - OMG + C                        /AZP  10
7635  5667          FGET I ADTTH                                              /AZP  11
7636  4151          FDIV TWO                                                  /AZP  12
7637  6100          FPUT THTA                                                 /AZP  13
7640  2660          FSUB I ADOMG                                              /AZP  14
7641  1261          FADD COK                                                  /AZP  15
7642     0          FEXT                                                      /AZP  16
7643  1045          TAD HORD                                                  /AZP  17
7644  7710          SPA CLA                                                   /AZP  18
7645  5633          JMP I OTEST       /TOO LARGE                              /AZP  19
7646  2233          ISZ OTEST                                                 /AZP  20
7647  4407          JMS I LFPT        /OMG + THETA - E                        /AZP  21
7650  5660          FGET I ADOMG                                              /AZP  22
7651  1100          FADD THTA                                                 /AZP  23
```

```
7652  2264          FSUB EOK                                          /AZP  24
7653     0          FEXT                                              /AZP  25
7654  1045          TAD HORD                                          /AZP  26
7655  7700          SMA CLA              /SKIP IF MINUS. TOO SMALL    /AZP  27
7656  2233          ISZ OTEST            /OK                          /AZP  28
7657  5633          JMP I OTEST                                       /AZP  29
7660   627  ADOMG,  OMG                                               /AZP  30
7661    10  COK,    0010                 /-135                        /AZP  31
7662  5710          5710                                              /AZP  32
7663     0          0000                                              /AZP  33
7664     6  EOK,    0006                 /-45                         /AZP  34
7665  5140          5140                                              /AZP  35
7666     0          0000                                              /AZP  36
7667   624  ADTTH,  TTH                                               /AZP  37


             /HALF-SPHERE SEARCH                                     /HSS   1
                                                                     /HSS   2
             ADZERO#176                                              /HSS   3
             COUNT#170                                               /HSS   4
             CTERR#2670                                              /HSS   5
             CTHI#2671                                               /HSS   6
             DPIOUT#7505                                             /HSS   7
             HORD#45                                                 /HSS   8
             LCOP#24                                                 /HSS   9
             LCRLF#165                                               /HSS  10
             LFNP#26                                                 /HSS  11
             LFOP#27                                                 /HSS  12
             LFPT#7                                                  /HSS  13
             LGET#75                                                 /HSS  14
             LMI#63                                                  /HSS  15
             LMOTOR#162                                              /HSS  16
             LOMGA#66                                                /HSS  17
             LOPCH#70                                                /HSS  18
             LPUT#76                                                 /HSS  19
             LTSIN#65                                                /HSS  20
             LWHERE#145                                              /HSS  21
             LWMOT#167                                               /HSS  22
             MIO#1575                                                /HSS  23
             MOTST#517                                               /HSS  24
             OMGA#210                                                /HSS  25
             ONE#146                                                 /HSS  26
             RTMSV#617                                               /HSS  27
             STCT#2703                                               /HSS  28
             STORE#640                                               /HSS  29
             TWO#151                                                 /HSS  30
             WTCT#2721                                               /HSS  31
             TTH#624                                                 /HSS  32
             OMG#TTH+3                                               /HSS  33
             CHI#OMG+3                                               /HSS  34
             PHI#CHI+3                                               /HSS  35
                                                                     /HSS  36
             *100                                                    /HSS  37
             /TEMPORARIES                                            /HSS  38
100     0    LCHI,    0                                              /HSS  39
101     0    LPHI,    0                                              /HSS  40
102     0    LSTCT,   0                                              /HSS  41
103     0    LWTCT,   0                                              /HSS  42
104     0    LMOTST,  0                                              /HSS  43
105     0    IOMG,    0                                              /HSS  44
106     0             0                                              /HSS  45
107     0             0                                              /HSS  46
110     0    ICHI,    0                                              /HSS  47
111     0             0                                              /HSS  48
112     0             0                                              /HSS  49
113     0    TTHMX,   0                                              /HSS  50
114     0             0                                              /HSS  51
115     0             0                                              /HSS  52
116     0    DTTH,    0                                              /HSS  53
117     0             0                                              /HSS  54
120     0             0                                              /HSS  55
121     0    DCHI,    0                                              /HSS  56
122     0             0                                              /HSS  57
123     0             0                                              /HSS  58
124     0    CTMIN,   0                                              /HSS  59
125     0             0                                              /HSS  60
126     0             0                                              /HSS  61
127     0    TEMP,F,  0                                              /HSS  62
130     0             0                                              /HSS  63
131     0             0                                              /HSS  64
132     0    N,COSF,TANF,IND,0                                       /HSS  65
133     0                    0                                       /HSS  66
134     0                    0                                       /HSS  67
135     0    THETA,DMGMX,TOMG,0                                      /HSS  68
136     0                     0                                      /HSS  69
137     0                     0                                      /HSS  70
                                                                     /HSS  71
```

```
          *177                                                                  /HSS  72
177  5507 BATN,   5507                                                          /HSS  73
                                                                                /HSS  74
          *654                                                                  /HSS  75
          /RS. RATEMETER MODIFIED FOR HALF-SPHERE SEARCH PROGRAM TO AVOID STEPPING/HSS  76
          /CHARTING                                                             /HSS  77
654  7001 STRRTM, IAC                 /SET RATEMETER ON INDICATOR               /HSS  78
655  3370         DCA RNI                                                       /HSS  79
656  1217         TAD RTMSV           /SET TIME FOR COUNTING                    /HSS  80
657  3263         DCA RTMC                                                      /HSS  81
660  7040         CMA                 /WORD COUNTER # -1                        /HSS  82
661  3354         DCA WDK                                                       /HSS  83
662  4762 RATE1,  JMS I ASTCT         /START COUNT                              /HSS  84
663     0 RTMC,   0                                                             /HSS  85
664  4763         JMS I AWTCT         /WAIT FOR COUNT                           /HSS  86
665   170         COUNT                                                         /HSS  87
666  7000         NOP                 /IGNORE ERROR RETURN                      /HSS  88
667  1352 RATE2,  TAD TYPE            /TEST TYPE INDICATOR                      /HSS  89
670  7650         SNA CLA                                                       /HSS  90
671  5262         JMP RATE1           /DO NOT TYPE, RETURN FOR NEXT COUNT       /HSS  91
672  2354         ISZ WDK             /TEST WORD COUNTER                        /HSS  92
673  5277         JMP RATE3                                                     /HSS  93
674  1355         TAD WDKK            /RESET WORD COUNTER                       /HSS  94
675  3354         DCA WDK                                                       /HSS  95
676  4565         JMS I LCRLF         /PUT OUT CR,LF                            /HSS  96
677  1764 RATE3,  TAD I LCTER         /TEST FOR COUNT ERROR                     /HSS  97
700  7640         SZA CLA                                                       /HSS  98
701  5305         JMP RATE4           /ERROR                                    /HSS  99
702  4765         JMS I LDPIOT        /NO ERROR, PRINT COUNT                    /HSS 100
703  2671         CTHI                                                          /HSS 101
704  5262         JMP RATE1           /RETURN FOR NEXT COUNT                    /HSS 102
705  1356 RATE4,  TAD ASTK            /ERROR, PRINT *                           /HSS 103
706  4470         JMS I LOPCH                                                   /HSS 104
707  5262         JMP RATE1                                                     /HSS 105
          TYPE#752                                                              /HSS 106
          WDK#754                                                               /HSS 107
          *755                                                                  /HSS 108
755  7766 WDKK,   -12                                                           /HSS 109
756   252 ASTK,   252                                                           /HSS 110
          *762                                                                  /HSS 111
762  2703 ASTCT,  STCT                                                          /HSS 112
763  2721 AWTCT,  WTCT                                                          /HSS 113
764  2670 LCTER,  CTERR                                                         /HSS 114
765  7505 LDPIOT, DPIOUT                                                        /HSS 115
          *770                                                                  /HSS 116
770     0 RNI,    0                                                            /HSS 117
                                                                                /HSS 118
          *1344                                                                 /HSS 119
          /INTERRUPT HALF-SPHERE SEARCH                                         /HSS 120
1344 4424 INTRR,  JMS I LCOP         /SAVE PRESENT POSITION                    /HSS 121
1345 7764         -14                                                           /HSS 122
1346  624         TTH                                                           /HSS 123
1347  640         STORE                                                         /HSS 124
1350 4476         JMS I LPUT         /PUT AWAY CONSTANTS AND TEMPORARIES        /HSS 125
1351 3753         DCA I LBREAK       /CLEAR INDICATOR                           /HSS 126
1352 5466         JMP I LOMGA                                                   /HSS 127
1353 3177 LBREAK, BREAK                                                         /HSS 128
                                                                                /HSS 129
          /BK. SET INDICATOR TO INTERRUPT HALF-SPHERE SEARCH                    /HSS 130
1354 2753 BRK,    ISZ I LBREAK                                                  /HSS 131
1355 5465         JMP I LTSIN                                                   /HSS 132
                                                                                /HSS 133
          *2155                                                                 /HSS 134
2155  213         0213               /BK. BREAK HALF-SPHERE SEARCH             /HSS 135
2156 1354         BRK                                                           /HSS 136
          *2233                                                                 /HSS 137
2233 2223         2223               /RS. START MODIFIED RATEMETER             /HSS 138
2234  654         STRRTM                                                        /HSS 139
2235    0         0000                                                          /HSS 140
2236  210         OMGA                                                          /HSS 141
2237    0         0000                                                          /HSS 142
2240  210         OMGA                                                          /HSS 143
2241    0         0000                                                          /HSS 144
2242  210         OMGA                                                          /HSS 145
2243    0         0000                                                          /HSS 146
2244  210         OMGA                                                          /HSS 147
2245    0         0000                                                          /HSS 148
2246  210         OMGA                                                          /HSS 149
2247    0         0000                                                          /HSS 150
2250  210         OMGA                                                          /HSS 151
2251    0         0000                                                          /HSS 152
```

```
2252   210          OMGA                                                    /HSS 153
2253  1023          1023                /HS. HALF-SPHERE SEARCH             /HSS 154
2254  7633          LOOK                                                    /HSS 155
            *2261                                                           /HSS 156
2261   324          0324                /CT. CONTINUE HALF-SPHERE SEARCH    /HSS 157
2262  2551          CONT                                                    /HSS 158
2263     0          0000                                                    /HSS 159
2264   210          OMGA                                                    /HSS 160
                                                                            /HSS 161
            *2551                                                           /HSS 162
            /CT. CONTINUE HALF SPHERE SEARCH                                /HSS 163
2551  4424  CONT,   JMS I LCOP          /COPY BACK FORMER POSITION          /HSS 164
2552  7764          -14                                                     /HSS 165
2553   640          STORE                                                   /HSS 166
2554   624          TTH                                                     /HSS 167
2555  4475          JMS I LGET          /PUT CONSTANTS AND TEMPORARIES ON PAGE ZERO/HSS 168
2556  3600          LOOKB                                                   /HSS 169
2557  5760          JMP I LRETN         /CONTINUE SEARCH.                   /HSS 170
2560  3122  LRETN,  RETN                                                    /HSS 171
                                                                            /HSS 172
            /CONSTANTS                                                      /HSS 173
2561    10  FP180,  0010                /180                                /HSS 174
2562  2640          2640                                                    /HSS 175
2563     0          0000                                                    /HSS 176
2564     6  FP45,   0006                /45                                 /HSS 177
2565  2640          2640                                                    /HSS 178
2566     0          0000                                                    /HSS 179
2567    11  FP359,  0011                /359                                /HSS 180
2570  2634          2634                                                    /HSS 181
2571     0          0000                                                    /HSS 182
2572     0  HALF,   0000                /.5                                 /HSS 183
2573  2000          2000                                                    /HSS 184
2574     0          0000                                                    /HSS 185
                                                                            /HSS 186
            *3000                                                           /HSS 187
            /CONTINUATION OF HALF-SPHERE SEARCH                             /HSS 188
3000  4407  LOOK2,  JMS I LFPT          /COMPUTE F#180/N SO THAT N HAS SMALLEST VAL/HSS 189
3001  5771          FGET I LFP180       /F LESS THAN  OMGMX-.5              /HSS 190
3002  4132          FDIV N                                                  /HSS 191
3003  6127          FPUT F                                                  /HSS 192
3004  2135          FSUB OMGMX                                              /HSS 193
3005  1774          FADD I LHALF                                            /HSS 194
3006     0          FEXT                                                    /HSS 195
3007  1045          TAD HORD                                                /HSS 196
3010  7710          SPA CLA                                                 /HSS 197
3011  5220          JMP LOOK3                                               /HSS 198
3012  4407          JMS I LFPT                                              /HSS 199
3013  5132          FGET N              /N#N+1                              /HSS 200
3014  1146          FADD ONE                                                /HSS 201
3015  6132          FPUT N                                                  /HSS 202
3016     0          FEXT                                                    /HSS 203
3017  5200          JMP LOOK2                                               /HSS 204
3020  4407  LOOK3,  JMS I LFPT                                              /HSS 205
3021  5146          FGET ONE                                                /HSS 206
3022  6577          FPUT I BATN                                             /HSS 207
3023  5127          FGET F                                                  /HSS 208
3024     4          FCOS                                                    /HSS 209
3025  6132          FPUT COSF                                               /HSS 210
3026  5127          FGET F                                                  /HSS 211
3027     3          FSIN                                                    /HSS 212
3030  4132          FDIV COSF                                               /HSS 213
3031  6132          FPUT TANF                                               /HSS 214
3032  5500          FGET I LCHI                                             /HSS 215
3033     4          FCOS                                                    /HSS 216
3034  3132          FMPY TANF                                               /HSS 217
3035     5          FATN                                                    /HSS 218
3036  1774          FADD I LHALF                                            /HSS 219
3037  3105          FMPY IOMG                                               /HSS 220
3040  6710          FPUT I LOMG         /OMG#IOMG*(ATAN(COS(CHI)*TAN(F))+.5)/HSS 221
3041     0          FEXT                                                    /HSS 222
3042  4504          JMS I LMOTST        /START MOTORS                       /HSS 223
3043  3132          DCA IND             /IND#0                              /HSS 224
3044  4407          JMS I LFPT          /SET UP TO DRIVE OMEGA TO -OMG      /HSS 225
3045  5710          FGET I LOMG                                             /HSS 226
3046     6          FNEG                                                    /HSS 227
3047  6710          FPUT I LOMG                                             /HSS 228
3050  6135          FPUT TOMG           /SAVE DESTINATION OF OMEGA.         /HSS 229
3051  5105          FGET IOMG           /IOMG#-IOMG                         /HSS 230
3052     6          FNEG                                                    /HSS 231
3053  6105          FPUT IOMG                                               /HSS 232
3054     0          FEXT                                                    /HSS 233
```

```
3055  4567          JMS I LWMOT        /WAIT FOR MOTORS TO STOP                /HSS 234
3056  4562          JMS I LMOTOR       /START OMEGA DRIVE.                     /HSS 235
3057  1575  LMIO,   MIO                                                        /HSS 236
3060  4502  LOOK4,  JMS I LSTCT        /COUNT FOR .1 SECOND                    /HSS 237
3061  7777          -1                                                         /HSS 238
3062  4503          JMS I LWTCT        /WAIT FOR COUNT.                        /HSS 239
3063   170          COUNT                                                      /HSS 240
3064  5274          JMP LOOK4A         /HIGH COUNT.                            /HSS 241
3065  4407          JMS I LFPT         /TEST COUNT AGAINST MINIMUM COUNT.      /HSS 242
3066  5170          FGET COUNT                                                 /HSS 243
3067  2124          FSUB CTMIN                                                 /HSS 244
3070     0          FEXT                                                       /HSS 245
3071  1045          TAD HORD                                                   /HSS 246
3072  7710          SPA CLA                                                    /HSS 247
3073  5313          JMP LOOK5          /LESS THAN MINIMUM COUNT                /HSS 248
3074  1132  LOOK4A, TAD IND            /IS IND ZERO                            /HSS 249
3075  7640          SZA CLA                                                    /HSS 250
3076  5314          JMP LOOK6          /NO.                                    /HSS 251
3077  3657          DCA I LMIO         /YES. STOP MOTOR AND PRINT POSITION.    /HSS 252
3100  4545          JMS I LWHERE                                               /HSS 253
3101  4565          JMS I LCRLF                                                /HSS 254
3102  4427          JMS I LFOP                                                 /HSS 255
3103  7774          -4                                                         /HSS 256
3104   624  LTTH,   TTH                                                        /HSS 257
3105  4424          JMS I LCOP         /RESET OMEGA TO DRIVE TO DESTINATION.   /HSS 258
3106  7775          -3                                                         /HSS 259
3107   135          TOMG                                                       /HSS 260
3110   627  LOMG,   OMG                                                        /HSS 261
3111  4504          JMS I LMOTST       /START OMEGA MOTOR.                     /HSS 262
3112  7001          IAC                /SET IND#1.                             /HSS 263
3113  3132  LOOK5,  DCA IND                                                    /HSS 264
3114  1463  LOOK6,  TAD I LMI          /HAS MOTOR REACHED DESTINATION          /HSS 265
3115  7640          SZA CLA                                                    /HSS 266
3116  5260          JMP LOOK4          /NO. COUNT AGAIN.                       /HSS 267
3117  1377          TAD BREAK          /YES. TEST FOR BREAK IN SEARCH.         /HSS 268
3120  7640          SZA CLA                                                    /HSS 269
3121  5775          JMP I INTR         /INTERRUPTION REQUESTED.                /HSS 270
3122  4407  RETN,   JMS I LFPT         /NO BREAK.                              /HSS 271
3123  5500          FGET I LCHI        /TEST CHI.                              /HSS 272
3124  2772          FSUB I LFP45                                               /HSS 273
3125  3110          FMPY ICHI                                                  /HSS 274
3126  2772          FSUB I LFP45                                               /HSS 275
3127     0          FEXT                                                       /HSS 276
3130  1045          TAD HORD                                                   /HSS 277
3131  7700          SMA CLA                                                    /HSS 278
3132  5342          JMP LOOK7                                                  /HSS 279
3133  4407          JMS I LFPT         /CHI HAS NOT REACHED LIMIT. INCREMENT CHI. /HSS 280
3134  5110          FGET ICHI                                                  /HSS 281
3135  3121          FMPY DCHI                                                  /HSS 282
3136  1500          FADD I LCHI                                                /HSS 283
3137  6500          FPUT I LCHI                                                /HSS 284
3140     0          FEXT                                                       /HSS 285
3141  5220          JMP LOOK3                                                  /HSS 286
3142  4407  LOOK7,  JMS I LFPT         /CHI HAS REACHED LIMIT.                 /HSS 287
3143  5110          FGET ICHI          /ICHI#-ICHI                             /HSS 288
3144     6          FNEG                                                       /HSS 289
3145  6110          FPUT ICHI                                                  /HSS 290
3146  5127          FGET F             /PHI#PHI + 2*F                          /HSS 291
3147  3151          FMPY TWO                                                   /HSS 292
3150  1501          FADD I LPHI                                                /HSS 293
3151  6501          FPUT I LPHI        /TEST PHI.                              /HSS 294
3152  2773          FSUB I LFP359                                              /HSS 295
3153     0          FEXT                                                       /HSS 296
3154  1045          TAD HORD                                                   /HSS 297
3155  7750          SPA SNA CLA                                                /HSS 298
3156  5220          JMP LOOK3          /PHI HAS NOT REACHED LIMIT.             /HSS 299
3157  4407          JMS I LFPT         /PHI HAS REACHED LIMIT.                 /HSS 300
3160  5704          FGET I LTTH        /ADVANCE 2THETA.                        /HSS 301
3161  1116          FADD DTTH                                                  /HSS 302
3162  6704          FPUT I LTTH                                                /HSS 303
3163  2113          FSUB TTHMX         /TEST 2THETA                            /HSS 304
3164     0          FEXT                                                       /HSS 305
3165  1045          TAD HORD                                                   /HSS 306
3166  7750          SPA SNA CLA                                                /HSS 307
3167  5776          JMP I ALOOK1       /START SEARCH AT NEW 2THETA             /HSS 308
3170  5466          JMP I LOMGA        /SEARCH IS COMPLETE.                    /HSS 309
3171  2561  LFP180, FP180                                                      /HSS 310
3172  2564  LFP45,  FP45                                                       /HSS 311
3173  2567  LFP359, FP359                                                      /HSS 312
3174  2572  LHALF,  HALF                                                       /HSS 313
3175  1344  INTR,   INTRR                                                      /HSS 314
```

```
3176  7652  ALOOK1, LOOK1                                                    /HSS 315
3177     0  BREAK,  0                                                       /HSS 316
                                                                            /HSS 317
             *3600                                                          /HSS 318
             /BLOCK FOR STORAGE OF CONSTANTS AND COMPUTED VALUES            /HSS 319
3600  7746  LOOKB,  -32                                                     /HSS 320
3601   632          CHI                                                      /HSS 321
3602   635          PHI                                                      /HSS 322
3603  2703          STCT                                                     /HSS 323
3604  2721          WTCT                                                     /HSS 324
3605   517          MOTST                                                    /HSS 325
             BTTHMX#.+6                                                     /HSS 326
                                                                            /HSS 327
             *7633                                                          /HSS 328
             /HS. SEARCH HALF SPHERE FOR REFLECTIONS                        /HSS 329
7633  4426  LOOK,   JMS I LFNP          /READ STARTING 2THETA, MAXIMUM 2THETA, INCR/HSS 330
7634  7777          -1                   /FOR 2THETA AND CHI, AND MINIMUM COUNT FOR /HSS 331
7635   624  ATTH,   TTH                  /POSITION IS TO BE RECORDED.       /HSS 332
7636  4426          JMS I LFNP                                               /HSS 333
7637  7774          -4                                                       /HSS 334
7640  3614          BTTHMX                                                   /HSS 335
7641  4475          JMS I LGET           /GET CONSTANTS                      /HSS 336
7642  3600          LOOKB                                                    /HSS 337
7643  4407          JMS I LFPT                                               /HSS 338
7644  5576          FGET I ADZERO        /CHI#0                              /HSS 339
7645  6500          FPUT I LCHI                                              /HSS 340
7646  5146          FGET ONE             /ICHI#1                             /HSS 341
7647  6110          FPUT ICHI                                                /HSS 342
7650  6105          FPUT ICMG            /ICMG#1                             /HSS 343
7651     0          FEXT                                                     /HSS 344
7652  4407  LOOK1,  JMS I LFPT                                               /HSS 345
7653  5146          FGET ONE             /N#1                                /HSS 346
7654  6132          FPUT N                                                   /HSS 347
7655  5576          FGET I ADZERO        /PHI#0.                             /HSS 348
7656  6501          FPUT I LPHI                                              /HSS 349
7657  5635          FGET I ATTH          /COMPUTE OMGMX#MINF(ABSF(THTA+43), ABSF(THT/HSS 350
7660  4151          FDIV TWO                                                 /HSS 351
7661  6135          FPUT THETA                                               /HSS 352
7662  1304          FADD FP43                                                /HSS 353
7663     7          FABS                                                     /HSS 354
7664  6127          FPUT TEMP                                                /HSS 355
7665  5135          FGET THETA                                               /HSS 356
7666  2307          FSUB FP67                                                /HSS 357
7667     7          FABS                                                     /HSS 358
7670  6135          FPUT OMGMX                                               /HSS 359
7671  2127          FSUB TEMP                                                /HSS 360
7672     0          FEXT                                                     /HSS 361
7673  1045          TAD HORD                                                 /HSS 362
7674  7750          SPA SNA CLA                                              /HSS 363
7675  5703          JMP I ALOOK2                                             /HSS 364
7676  4407          JMS I LFPT                                               /HSS 365
7677  5127          FGET TEMP                                                /HSS 366
7700  6135          FPUT OMGMX                                               /HSS 367
7701     0          FEXT                                                     /HSS 368
7702  5703          JMP I ALOOK2                                             /HSS 369
7703  3000  ALOOK2, LOOK2                                                    /HSS 370
7704     6  FP43,   0006                 /43                                 /HSS 371
7705  2540          2540                                                     /HSS 372
7706     0          0000                                                     /HSS 373
7707     7  FP67,   0007                 /67.5                               /HSS 374
7710  2070          2070                                                     /HSS 375
7711     0          0000                                                     /HSS 376
                                                                            /HSS 377


             /SEARCH FOR SECOND REFLECTION                                  /RES   1
             /MODIFICATION OF SET-UP AND INTERFACE PROGRAMS                 /RES   2
                                                                            /RES   3
             ALPH#130                                                       /RES   4
             ANG#4400                                                       /RES   5
             CCHI#4473                                                      /RES   6
             COUNT#170                                                      /RES   7
             CPHI#4476                                                      /RES   8
             CRD#2656                                                       /RES   9
             CTERR#2670                                                     /RES  10
             CTHI#2671                                                      /RES  11
             CTLO#2672                                                      /RES  12
             DCR#1363                                                       /RES  13
             DPIOUT#7505                                                    /RES  14
             EXP#44                                                         /RES  15
```

```
          FH#4454                                                          /RES  16
          HORD#45                                                          /RES  17
          IND#137                                                          /RES  18
          K#136                                                            /RES  19
          LANG#35                                                          /RES  20
          LCOP#24                                                          /RES  21
          LCRLF#165                                                        /RES  22
          LFIX#34                                                          /RES  23
          LFNK#5                                                           /RES  24
          LFNP#26                                                          /RES  25
          LFOP#27                                                          /RES  26
          LFPT#7                                                           /RES  27
          LINTIN#73                                                        /RES  28
          LIOUT#64                                                         /RES  29
          LMM#33                                                           /RES  30
          LMV#25                                                           /RES  31
          LOMGA#66                                                         /RES  32
          LOPCH#70                                                         /RES  33
          LWMOT#167                                                        /RES  34
          M#4333                                                           /RES  35
          MOTSET#531                                                       /RES  36
          MTWO#155                                                         /RES  37
          OMGA#210                                                         /RES  38
          RTMSV#617                                                        /RES  39
          SGTM#2135                                                        /RES  40
          STCT#2703                                                        /RES  41
          TEM#100                                                          /RES  42
          TSIN#2373                                                        /RES  43
          TTH#624                                                          /RES  44
          TYPE#752                                                         /RES  45
          VPH1#100                                                         /RES  46
          WDK#754                                                          /RES  47
          WTCT#2721                                                        /RES  48
                                                                           /RES  49
          /MODIFICATIONS TO INTERFACE PROGRAM                              /RES  50
                                                                           /RES  51
          *443                                                             /RES  52
 443  7000          NOP                  /ELIMINATE MOTOR OVERSHOOT        /RES  53
          *1424                                                            /RES  54
1424  7000          NOP                                                    /RES  55
          *1523                                                            /RES  56
1523  7000          NOP                                                    /RES  57
          *1624                                                            /RES  58
1624  7000          NOP                                                    /RES  59
          *1723                                                            /RES  60
1723  7000          NOP                                                    /RES  61
                                                                           /RES  62
          *2655                                                            /RES  63
2655  5663          JMP I LCONT          /JUMP TO CONTINUOUS COUNTER        /RES  64
          *2663                                                            /RES  65
2663  7666  LCONT,  CONT                                                   /RES  66
                                                                           /RES  67
          *2710                                                            /RES  68
2710  5711          JMP I LPSTCT         /JUMP OUT OF STCT TO CLEAR MOMIN   /RES  69
2711  4366  LPSTCT, PSTCT                                                  /RES  70
                                                                           /RES  71
          *654                                                             /RES  72
          /RS. RATEMETER MODIFIED FOR SEARCH PROGRAM TO AVOID STEPPING OR CHARTING/RES  73
 654  7001  STRRTM, IAC                  /SET RATEMETER ON INDICATOR       /RES  74
 655  3370          DCA RNI                                                /RES  75
 656  1217          TAD RTMSV            /SET TIME FOR COUNTING            /RES  76
 657  3263          DCA RTMC                                               /RES  77
 660  7040          CMA                  /WORD COUNTER # -1                /RES  78
 661  3354          DCA WDK                                                /RES  79
 662  4762  RATE1,  JMS I ASTCT          /START COUNT                      /RES  80
 663     0  RTMC,   0                                                      /RES  81
 664  4763          JMS I AWTCT          /WAIT FOR COUNT                   /RES  82
 665   170          COUNT                                                  /RES  83
 666  7000          NOP                  /IGNORE ERROR RETURN              /RES  84
 667  1352  RATE2,  TAD TYPE             /TEST TYPE INDICATOR              /RES  85
 670  7650          SNA CLA                                                /RES  86
 671  5262          JMP RATE1            /DO NOT TYPE, RETURN FOR NEXT COUNT /RES  87
 672  2354          ISZ WDK              /TEST WORD COUNTER                /RES  88
 673  5277          JMP RATE3                                              /RES  89
 674  1355          TAD WDKK             /RESET WORD COUNTER               /RES  90
 675  3354          DCA WDK                                                /RES  91
 676  4565          JMS I LCRLF          /PUT OUT CR,LF                    /RES  92
 677  1764  RATE3,  TAD I LCTER          /TEST FOR COUNT ERROR             /RES  93
 700  7640          SZA CLA                                                /RES  94
 701  5305          JMP RATE4            /ERROR                            /RES  95
 702  4765          JMS I LDPIOT         /NO ERROR, PRINT COUNT            /RES  96
```

```
703  2671          CTHI                                                    /RES  97
704  5262          JMP RATE1          /RETURN FCR NEXT COUNT               /RES  98
705  1356  RATE4,  TAD ASTK           /ERRCR, PRINT *                      /RES  99
706  4470          JMS I LOPCH                                             /RES 100
707  5262          JMP RATE1                                               /RES 101
                                                                           /RES 102
710     1  A11,    0001               /CONSTANT                            /RES 103
711  2000          2000                                                    /RES 104
712     0          0000                                                    /RES 105
713     0  A21,    0                  /CONSTANT                            /RES 106
714     0          0                                                       /RES 107
715     0          0                                                       /RES 108
716     0  A31,    0                  /CONSTANT                            /RES 109
717     0          0                                                       /RES 110
720     0          0                                                       /RES 111
721     0  A12,    0                  /CONSTANT                            /RES 112
722     0          0                                                       /RES 113
723     0          0                                                       /RES 114
724     0  A22,    0                                                       /RES 115
725     0          0                                                       /RES 116
726     0          0                                                       /RES 117
727     0  A32,    0                                                       /RES 118
730     0          0                                                       /RES 119
731     0          0                                                       /RES 120
732     0  A13,    0                  /CONSTANT                            /RES 121
733     0          0                                                       /RES 122
734     0          0                                                       /RES 123
735     0  A23,    0                                                       /RES 124
736     0          0                                                       /RES 125
737     0          0                                                       /RES 126
740     0  A33,    0                                                       /RES 127
741     0          0                                                       /RES 128
742     0          0                                                       /RES 129
           *755                                                            /RES 130
755  7766  WCKK,   -12                                                     /RES 131
756   252  ASTK,   252                                                     /RES 132
           *762                                                            /RES 133
762  2703  ASTCT,  STCT                                                    /RES 134
763  2721  AWTCT,  WTCT                                                    /RES 135
764  2670  LCTER,  CTERR                                                   /RES 136
765  7505  LDPIOT, DPIOUT                                                  /RES 137
           *770                                                            /RES 138
770     0  RNI,    0                                                       /RES 139
                                                                           /RES 140
                                                                           /RES 141
           *2155                                                           /RES 142
2155    0          0000                                                    /RES 143
2156 2373          TSIN                                                    /RES 144
           *2233                                                           /RES 145
2233 2223          2223               /RS. START RATEMETER COUNT           /RES 146
2234  654          STRRTM                                                  /RES 147
2235    0          0000                                                    /RES 148
2236  210          OMGA                                                    /RES 149
2237    0          0000                                                    /RES 150
2240  210          OMGA                                                    /RES 151
2241    0          0000                                                    /RES 152
2242  210          OMGA                                                    /RES 153
2243    0          0000                                                    /RES 154
2244  210          OMGA                                                    /RES 155
2245    0          0000                                                    /RES 156
2246  210          OMGA                                                    /RES 157
           *2253                                                           /RES 158
2253 2205          2205               /RE. SEARCH FCR SECOND REFLECTICN    /RES 159
2254 3000          RFL                                                     /RES 160
           *2261                                                           /RES 161
2261    0          0000                                                    /RES 162
2262  210          OMGA                                                    /RES 163
2263    0          0000                                                    /RES 164
2264  210          OMGA                                                    /RES 165
                                                                           /RES 166
           *3000                                                           /RES 167
           /SEARCH FOR SECOND REFLECTICN                                   /RES 168
3000 1155  RFL,    TAD MTWO           /SET COUNTER TC REAC TWC SETS OF INDICES /RES 169
3001 3137          DCA IND                                                 /RES 170
3002 4426  RFL1,   JMS I LFNP                                              /RES 171
3003 7775          -3                                                      /RES 172
3004 4454          FH                                                      /RES 173
3005 2137          ISZ IND            /TEST COUNTER                        /RES 174
3006 5351          JMP RFL5           /INDICES FCR FIRST REFLECTICN, COMPUTE ANGL/RES 175
3007 4405          JMS I LFNK         /REAC INCREMENTAL ANGLE              /RES 176
3010 4407          JMS I LFPT                                              /RES 177
```

```
3011  6130          FPUT ALPH          /SET UP INCREMENTAL ANGLE MATRIX        /RES 178
3012     4          FCOS                                                       /RES 179
3013  6766          FPUT I LA22                                                /RES 180
3014  6767          FPUT I LA33                                                /RES 181
3015  5130          FGET ALPH                                                  /RES 182
3016     3          FSIN                                                       /RES 183
3017  6770          FPUT I LA23                                                /RES 184
3020     6          FNEG                                                       /RES 185
3021  6771          FPUT I LA32                                                /RES 186
3022  5756          FGET I LPHI        /SET UP PHI MATRIX                      /RES 187
3023     4          FCOS                                                       /RES 188
3024  6657          FPUT I LP11                                                /RES 189
3025  6757          FPUT I LP22                                                /RES 190
3026  5756          FGET I LPHI                                                /RES 191
3027     3          FSIN                                                       /RES 192
3030  6760          FPUT I LP21                                                /RES 193
3031     6          FNEG                                                       /RES 194
3032  6761          FPUT I LP12                                                /RES 195
3033  5762          FGET I LCHI        /SET UP CHI MATRIX                      /RES 196
3034     4          FCOS                                                       /RES 197
3035  6660          FPUT I LC11                                                /RES 198
3036  6763          FPUT I LC33                                                /RES 199
3037  5762          FGET I LCHI                                                /RES 200
3040     3          FSIN                                                       /RES 201
3041  6764          FPUT I LC31                                                /RES 202
3042     6          FNEG                                                       /RES 203
3043  6765          FPUT I LC13                                                /RES 204
3044  5353          FGET K360          /SET COUNTER FOR SEARCH                 /RES 205
3045  4130          FDIV ALPH                                                  /RES 206
3046     7          FABS                                                       /RES 207
3047     0          FEXT                                                       /RES 208
3050  4434          JMS I LFIX                                                 /RES 209
3051  7040          CMA                                                        /RES 210
3052  3136          DCA K                                                      /RES 211
3053  4473          JMS I LINTIN       /READ MINIMUM COUNT PER TENTH SECOND     /RES 212
3054  7041          CIA                /NEGATE IT AND STORE                    /RES 213
3055  3775          DCA I LMCMIN                                               /RES 214
3056  4433          JMS I LMM          /MULTIPLY THE THREE MATRICES            /RES 215
3057  7633  LP11,   P11                                                        /RES 216
3060  3600  LC11,   C11                                                        /RES 217
3061   100          TEM                                                        /RES 218
3062  4433          JMS I LMM                                                  /RES 219
3063   100          TEM                                                        /RES 220
3064   710          A11                                                        /RES 221
3065  4333          M                  /SAVE MATRIX PRODUCT                    /RES 222
3066  4407          JMS I LFPT         /ALTER CHI AND PHI MATRICES             /RES 223
3067  5764          FGET I LC31                                                /RES 224
3070  6765          FPUT I LC13                                                /RES 225
3071     6          FNEG                                                       /RES 226
3072  6764          FPUT I LC31                                                /RES 227
3073  5760          FGET I LP21                                                /RES 228
3074  6761          FPUT I LP12                                                /RES 229
3075     6          FNEG                                                       /RES 230
3076  6760          FPUT I LP21                                                /RES 231
3077     0          FEXT                                                       /RES 232
3100  4433          JMS I LMM          /COMPLETE COMPUTATION OF MATRIX M       /RES 233
3101  4333          M                                                          /RES 234
3102  3600          C11                                                        /RES 235
3103   100          TEM                                                        /RES 236
3104  4433          JMS I LMM                                                  /RES 237
3105   100          TEM                                                        /RES 238
3106  7633          P11                                                        /RES 239
3107  4333          M                                                          /RES 240
3110  4435          JMS I LANG         /COMPUTE ANGLES FOR SECOND REFLECTION   /RES 241
3111  4772          JMS I LMSET        /MAKE INITIAL SETTING                   /RES 242
3112  4567          JMS I LWMOT        /WAIT FOR IT TO FINISH                  /RES 243
3113  1316  RFL2,   TAD DOFF           /TURN ON DATA COUNT                     /RES 244
3114  7040          CMA                                                        /RES 245
3115  4776          JMS I ADCR                                                 /RES 246
3116  7677  DOFF,   7677                                                       /RES 247
3117  3377          DCA PKI            /CLEAR PEAK INDICATOR                   /RES 248
3120  4772          JMS I LMSET                                                /RES 249
3121  4425          JMS I LMV          /MULTIPLY INDICES BY MATRIX M           /RES 250
3122  4333          M                                                          /RES 251
3123   100          VPHI               /(INDICES IN PHI SYSTEM SET BY SUBROUTINE A/RES 252
3124  4454          FH                                                         /RES 253
3125  4424          JMS I LCOP         /SAVE RESULT                            /RES 254
3126  7767          -11                                                        /RES 255
3127  4454          FH                                                         /RES 256
3130   100          VPHI                                                       /RES 257
3131  1373          TAD LRTN           /SET ADDRESS FOR RETURN FROM SUBROUTINE ANG/RES 258
```

```
3132  3435          DCA I LANG                                          /RES 259
3133  5774          JMP I CALC          /JUMP INTC SUBROUTINE ANG FCR NEW CHI AND P/RES 260
3134  4567  RTN,    JMS I. LWMOT        /WAIT FOR MCTCRS TO STOP            /RES 261
3135  1377          TAD PKI             /TEST PEAK INDICATOR                /RES 262
3136  7650          SNA CLA                                                 /RES 263
3137  5346          JMP RFL4                                                /RES 264
3140  4565          JMS I LCRLF         /PRINT CURRENT ANGLES               /RES 265
3141  4427          JMS I LFOP                                              /RES 266
3142  7774          -4                                                      /RES 267
3143   624          TTH                                                     /RES 268
3144  1377          TAD PKI             /PRINT LARGEST TENTH-SECONC COUNT   /RES 269
3145  4464          JMS I LIOUT                                             /RES 270
3146  2136  RFL4,   ISZ K               /TEST SEARCH COUNTER                /RES 271
3147  5313          JMP RFL2            /JUMP BACK FCR NEXT STEP            /RES 272
3150  5466          JMP I LOMGA         /RETURN TC WAITING LOOP             /RES 273
3151  4435  RFL5,   JMS I LANG          /COMPUTE ANGLES FCR FIRST SET OF INDICES /RES 274
3152  5202          JMP RFL1            /JUMP TO READ SECOND SET OF INDICES /RES 275
3153    11  K360,   0011                /CONSTANT  360                      /RES 276
3154  2640          2640                                                    /RES 277
3155     0          0000                                                    /RES 278
3156  4476  LPHI,   CPHI                                                    /RES 279
3157  7647  LP22,   P22                                                     /RES 280
3160  7636  LP21,   P21                                                     /RES 281
3161  7644  LP12,   P12                                                     /RES 282
3162  4473  LCHI,   CCHI                                                    /RES 283
3163  3630  LC33,   C33                                                     /RES 284
3164  3606  LC31,   C31                                                     /RES 285
3165  3622  LC13,   C13                                                     /RES 286
3166   724  LA22,   A22                                                     /RES 287
3167   740  LA33,   A33                                                     /RES 288
3170   735  LA23,   A23                                                     /RES 289
3171   727  LA32,   A32                                                     /RES 290
3172   531  LMSET,  MOTSET                                                  /RES 291
3173  3134  LRTN,   RTN                                                     /RES 292
3174  4405  CALC,   ANG+5                                                   /RES 293
3175  7712  LMCMIN, MCMIN                                                   /RES 294
3176  1363  ADCR,   DCR                                                     /RES 295
3177     0  PKI,    0                                                      /RES 296
                                                                            /RES 297
            *3600                                                           /RES 298
3600     0  C11,    0                                                      /RES 299
3601     0          0                                                      /RES 300
3602     0          0                                                      /RES 301
3603     0  C21,    0                   /CONSTANT                          /RES 302
3604     0          0                                                      /RES 303
3605     0          0                                                      /RES 304
3606     0  C31,    0                                                      /RES 305
3607     0          0                                                      /RES 306
3610     0          0                                                      /RES 307
3611     0  C12,    0                   /CONSTANT                          /RES 308
3612     0          0                                                      /RES 309
3613     0          0                                                      /RES 310
3614     1  C22,    0001                /CONSTANT                          /RES 311
3615  2000          2000                                                   /RES 312
3616     0          0000                                                   /RES 313
3617     0  C32,    0                   /CONSTANT                          /RES 314
3620     0          0                                                      /RES 315
3621     0          0                                                      /RES 316
3622     0  C13,    0                                                      /RES 317
3623     0          0                                                      /RES 318
3624     0          0                                                      /RES 319
3625     0  C23,    0                   /CONSTANT                          /RES 320
3626     0          0                                                      /RES 321
3627     0          0                                                      /RES 322
3630     0  C33,    0                                                      /RES 323
3631     0          0                                                      /RES 324
3632     0          0                                                      /RES 325
                                                                           /RES 326
            *4366                                                          /RES 327
4366  3773  PSTCT,  DCA I ACTLO         /PATCH FCR STCT SUBROUTINE         /RES 328
4367  3772          DCA I ACTHI                                            /RES 329
4370  3774          DCA I AMCMIN                                           /RES 330
4371  5775          JMP I LBACK                                            /RES 331
4372  2671  ACTHI,  CTHI                                                   /RES 332
4373  2672  ACTLO,  CTLO                                                   /RES 333
4374  7712  AMCMIN, MCMIN                                                  /RES 334
4375  2712  LBACK,  LPSTCT+1                                               /RES 335
                                                                           /RES 336
            *7633                                                          /RES 337
7633     0  P11,    0                                                     /RES 338
7634     0          0                                                     /RES 339
```

```
7635    0          0                                                    /RES 340
7636    0  P21,    0                                                    /RES 341
7637    0          0                                                    /RES 342
7640    0          0                                                    /RES 343
7641    0  P31,    0                    /CONSTANT                       /RES 344
7642    0          0                                                    /RES 345
7643    0          0                                                    /RES 346
7644    0  P12,    0                                                    /RES 347
7645    0          0                                                    /RES 348
7646    0          0                                                    /RES 349
7647    0  P22,    0                                                    /RES 350
7650    0          0                                                    /RES 351
7651    0          0                                                    /RES 352
7652    0  P32,    0                    /CONSTANT                       /RES 353
7653    0          0                                                    /RES 354
7654    0          0                                                    /RES 355
7655    0  P13,    0                    /CONSTANT                       /RES 356
7656    0          0                                                    /RES 357
7657    0          0                                                    /RES 358
7660    0  P23,    0                    /CONSTANT                       /RES 359
7661    0          0                                                    /RES 360
7662    0          0                                                    /RES 361
7663    1  P33,    0001                 /CONSTANT                       /RES 362
7664 2000          2000                                                 /RES 363
7665    0          0000                                                 /RES 364
7666 1312  CONT,   TAD MCMIN            /CONTINUOUS TENTH SECOND COUNTER /RES 365
7667 7450          SNA                                                  /RES 366
7670 5304          JMP SGNLT            /BY-PASS. REGULAR COUNTER IS IN USE /RES 367
7671 1707          TAD I LCTLO                                          /RES 368
7672 7710          SPA CLA              /TEST COUNT                     /RES 369
7673 5303          JMP CLR                                              /RES 370
7674 1710          TAD I LPKI           /IS IT GREATER THAN PREVIOUS COUNT /RES 371
7675 7041          CIA                                                  /RES 372
7676 1707          TAD I LCTLO                                          /RES 373
7677 7750          SPA SNA CLA                                          /RES 374
7700 5303          JMP CLR              /NO                             /RES 375
7701 1707          TAD I LCTLO          /YES. SAVE IT                   /RES 376
7702 3710          DCA I LPKI                                           /RES 377
7703 3707  CLR,    DCA I LCTLO          /CLEAR COUNT                    /RES 378
7704 4706  SGNLT,  JMS I LSGT           /ENTER SIGNAL TIMER             /RES 379
7705 5711          JMP I LCRD           /JUMP BACK TO CRD               /RES 380
7706 2135  LSGT,   SGTM                                                 /RES 381
7707 2672  LCTLO,  CTLO                                                 /RES 382
7710 3177  LPKI,   PKI                                                  /RES 383
7711 2656  LCRD,   CRD                                                  /RES 384
7712    0  MCMIN, 0                                                    /RES 385


           /MODIFICATION TO SET-UP TO CENTER BRAGG ANGLE                /BGS   1
                                                                        /BGS   2
           OMGA#210                                                     /BGS   3
           DELK#3676                                                    /BGS   4
           DELF#3701                                                    /BGS   5
           KP#100                       /TEMPORARIES IN COMMON          /BGS   6
           IND#101                                                      /BGS   7
           SGN#102                                                      /BGS   8
           TTHM#105                                                     /BGS   9
           OMGM#110                                                     /BGS  10
           DEL#113                                                      /BGS  11
           DELTA#116                                                    /BGS  12
           FR#121                                                       /BGS  13
           TTHD#124                                                     /BGS  14
           CMAX#127                                                     /BGS  15
           TEM1#132                                                     /BGS  16
           TEM2#135                                                     /BGS  17
           LFPT#7                        /CONSTANTS                     /BGS  18
           TTH#624                                                      /BGS  19
           OMG#627                                                      /BGS  20
           ONE#146                                                      /BGS  21
           TWO#151                                                      /BGS  22
           LFNK#5                                                       /BGS  23
           TEN#7450                                                     /BGS  24
           HORD#45                                                      /BGS  25
           HALF#621                                                     /BGS  26
           LFIX#34                                                      /BGS  27
           LFNP#26                                                      /BGS  28
           LWHERE#145                                                   /BGS  29
           ANGPRT#1336                                                  /BGS  30
           MOTST#517                                                    /BGS  31
           LWMOT#167                                                    /BGS  32
```

```
                LFLT#71                                                          /BGS  33
                ADZERO#176                                                       /BGS  34
                COUNT#170                                                        /BGS  35
                LMOTOR#162                                                       /BGS  36
                MIO#1575                                                         /BGS  37
                STCT#2703                                                        /BGS  38
                WTCT#2721                                                        /BGS  39
                                                                                 /BGS  40
                *1344                                                            /BGS  41
                /BG. CENTER BRAGG ANGLE.                                         /BGS  42
1344  4405      BRAGG,  JMS I LFNK          /READ AND SET UP COUNTING TIME       /BGS  43
1345  4407              JMS I LFPT                                               /BGS  44
1346  3755              FMPY I LTEN                                              /BGS  45
1347  1756              FADD I LHALF                                             /BGS  46
1350     0              FEXT                                                     /BGS  47
1351  4434              JMS I LFIX                                               /BGS  48
1352  7041              CIA                                                      /BGS  49
1353  3757              DCA I LTIME                                              /BGS  50
1354  5760              JMP I LCONT                                              /BGS  51
1355  7450      LTEN,   TEN                                                      /BGS  52
1356   621      LHALF,  HALF                                                     /BGS  53
1357  3157      LTIME,  TIME                                                     /BGS  54
1360  5371      LCONT,  CONT                                                     /BGS  55
                                                                                 /BGS  56
                *2155                                                            /BGS  57
2155     0              0000                                                     /BGS  58
2156   210              OMGA                                                     /BGS  59
                *2253                                                            /BGS  60
2253   207              0207                /BG.CENTER BRAGG ANGLE               /BGS  61
2254  1344              BRAGG                                                    /BGS  62
                *2261                                                            /BGS  63
2261     0              0000                                                     /BGS  64
2262   210              OMGA                                                     /BGS  65
2263     0              0000                                                     /BGS  66
2264   210              OMGA                                                     /BGS  67
                                                                                 /BGS  68
                *3000                                                            /BGS  69
                /SECOND CONTINUATION OF /BG.                                     /BGS  70
3000  1311      CONT2,  TAD INST1           /SET VARIABLE INSTRUCTION SO THAT OMEGA IS /BGS  71
3001  3345              DCA VARI2           /INCREMENTED                         /BGS  72
3002  1341              TAD INST2           /SET VARIABLE INSTRUCTION SO THAT 2THETA IS/BGS  73
3003  3342              DCA VARI1           /INCREMENTED BY DELTA                /BGS  74
3004  4215              JMS SUB             /LOCATE BEST 2THETA                  /BGS  75
3005  1341              TAD INST2           /SET VARIABLE INSTRUCTION SO THAT OMEGA IS /BGS  76
3006  3345              DCA VARI2                                                /BGS  77
3007  1214              TAD INST3           /SET VARIABLE INSTRUCTION SO THAT 2THETA IS/BGS  78
3010  3342              DCA VARI1           /INCREMENTED BY 2*DELTA              /BGS  79
3011  4215              JMS SUB             /LOCATE BEST 2THETA AND OMEGA        /BGS  80
3012  5613              JMP I LAPRT         /PRINT RESULT, GO TO WAITING LOOP    /BGS  81
3013  1336      LAPRT,  ANGPRT                                                   /BGS  82
3014  1116      INST3,  FADD DELTA                                               /BGS  83
                                                                                 /BGS  84
                /LOCATE BEST BRAGG ANGLE                                         /BGS  85
3015     0      SUB,    0                                                        /BGS  86
3016  4407              JMS I LFPT                                               /BGS  87
3017  5673              FGET I LDELK        /TTHD#.04                            /BGS  88
3020  6124              FPUT TTHD                                                /BGS  89
3021     0              FEXT                                                     /BGS  90
3022  4276              JMS SCAN            /PERFORM COARSE SCAN                 /BGS  91
3023  4407              JMS I LFPT                                               /BGS  92
3024  5674              FGET I LDELF        /TTHD#.005                           /BGS  93
3025  6124              FPUT TTHD                                                /BGS  94
3026  5105              FGET TTHM           /TTH#TTHM                            /BGS  95
3027  6776              FPUT I ADTTH                                             /BGS  96
3030  5110              FGET OMGM           /OMG#OMGM                            /BGS  97
3031  6777              FPUT I ADOMG                                             /BGS  98
3032     0              FEXT                                                     /BGS  99
3033  4276              JMS SCAN            /PERFORM FINE SCAN, STARTING AT MAX OF COAR/BGS 100
3034  4407              JMS I LFPT                                               /BGS 101
3035  5127              FGET CMAX           /CMAX#FR*CMAX                        /BGS 102
3036  3121              FMPY FR                                                  /BGS 103
3037  6127              FPUT CMAX                                                /BGS 104
3040  5673              FGET I LDELK        /DEL#.04                             /BGS 105
3041  6113              FPUT DEL                                                 /BGS 106
3042     0              FEXT                                                     /BGS 107
3043  4675              JMS I LCONV         /CONVERGE ON COUNT OF CMAX           /BGS 108
3044  4407              JMS I LFPT          /SAVE RESULTING TTH AND OMG          /BGS 109
3045  5776              FGET I ADTTH                                             /BGS 110
3046  6132              FPUT TEM1                                                /BGS 111
3047  5777              FGET I ADOMG                                             /BGS 112
3050  6135              FPUT TEM2                                                /BGS 113
```

```
3051  5673          FGET I LDELK        /DEL#-.04                                  /BGS 114
3052     6          FNEG                                                           /BGS 115
3053  6113          FPUT DEL                                                       /BGS 116
3054     0          FEXT                                                           /BGS 117
3055  4675          JMS I LCONV         /CONVERGE ON COUNT OF CMAX ON OTHER SIDE OF/BGS 118
3056  4407          JMS I LFPT          /AVERAGE THE RESULTS OF THE CONVERGE OPERAT/BGS 119
3057  5776          FGET I ADTTH                                                   /BGS 120
3060  1132          FADD TEM1                                                      /BGS 121
3061  4151          FDIV TWO                                                       /BGS 122
3062  6776          FPUT I ADTTH                                                   /BGS 123
3063  5777          FGET I ADOMG                                                   /BGS 124
3064  1135          FADD TEM2                                                      /BGS 125
3065  4151          FDIV TWO                                                       /BGS 126
3066  6777          FPUT I ADOMG                                                   /BGS 127
3067     0          FEXT                                                           /BGS 128
3070  4773          JMS I LMOTST        /DRIVE TO RESULTING AVERAGES               /BGS 129
3071  4567          JMS I LWMOT                                                    /BGS 130
3072  5615          JMP I SUB                                                      /BGS 131
3073  3676  LDELK,  DELK                                                           /BGS 132
3074  3701  LDELF,  DELF                                                           /BGS 133
3075  7633  LCONV,  CONV                                                           /BGS 134
                                                                                   /BGS 135
            /SUBROUTINE TO SCAN FOR MAXIMUM COUNT                                  /BGS 136
3076     0  SCAN,   0                                                             /BGS 137
3077  1336          TAD NS              /KP#-NS-1                                  /BGS 138
3100  7040          CMA                                                            /BGS 139
3101  3100          DCA KP                                                         /BGS 140
3102  1336          TAD NS                                                         /BGS 141
3103  4471          JMS I LFLT          /DELTA#-NS*TTHD/2                          /BGS 142
3104  4407          JMS I LFPT                                                     /BGS 143
3105  3124          FMPY TTHD                                                      /BGS 144
3106  4151          FDIV TWO                                                       /BGS 145
3107     6          FNEG                                                           /BGS 146
3110  6116          FPUT DELTA                                                     /BGS 147
3111  5576  INST1,  FGET I ADZERO       /INSTRUCTION USED AS CONSTANT              /BGS 148
3112  6127          FPUT CMAX           /CMAX#0                                    /BGS 149
3113     0          FEXT                                                           /BGS 150
3114  4337  SCAN1,  JMS STEP            /STEP AND COUNT                            /BGS 151
3115  5326          JMP SCAN2           /COUNT LESS THAN CMAX                      /BGS 152
3116  4407          JMS I LFPT          /COUNT GREATER THAN CMAX                   /BGS 153
3117  5170          FGET COUNT          /CMAX#COUNT                                /BGS 154
3120  6127          FPUT CMAX                                                      /BGS 155
3121  5777          FGET I ADOMG        /OMGM#OMG                                  /BGS 156
3122  6110          FPUT OMGM                                                      /BGS 157
3123  5776          FGET I ADTTH        /TTHM#TTH                                  /BGS 158
3124  6105          FPUT TTHM                                                      /BGS 159
3125     0          FEXT                                                           /BGS 160
3126  2100  SCAN2,  ISZ KP              /TEST COUNTER OF STEPS                     /BGS 161
3127  7410          SKP                                                            /BGS 162
3130  5676          JMP I SCAN          /FINISHED. RETURN.                         /BGS 163
3131  4407          JMS I LFPT                                                     /BGS 164
3132  5124          FGET TTHD           /DELTA#TTHD                                /BGS 165
3133  6116          FPUT DELTA                                                     /BGS 166
3134     0          FEXT                                                           /BGS 167
3135  5314          JMP SCAN1                                                      /BGS 168
3136    10  NS,     10                                                             /BGS 169
                                                                                   /BGS 170
            /SUBROUTINE TO STEP OMEGA, THEN 2THETA, AND COUNT.                     /BGS 171
3137     0  STEP,   0                                                             /BGS 172
3140  4407          JMS I LFPT          /INCREMENT 2THETA                          /BGS 173
3141  5116  INST2,  FGET DELTA          /INSTRUCTION USED AS CONSTANT              /BGS 174
3142     0  VARI1,  0                   /VARIABLE INSTRUCTION, FGET DELTA OR FADD D/BGS 175
3143  1776          FADD I ADTTH                                                   /BGS 176
3144  6776          FPUT I ADTTH                                                   /BGS 177
3145     0  VARI2,  0                   /VARIABLE INSTRUCTION, FGET I LZERO OR FGET/BGS 178
3146  1777          FADD I ADOMG        /INCREMENT OMEGA                           /BGS 179
3147  6777          FPUT I ADOMG                                                   /BGS 180
3150     0          FEXT                                                           /BGS 181
3151  4562          JMS I LMOTOR        /STEP OMEGA AND WAIT UNTIL IT HAS STOPPED  /BGS 182
3152  1575          MIO                                                            /BGS 183
3153  4567          JMS I LWMOT                                                    /BGS 184
3154  4773          JMS I LMOTST        /THEN STEP 2THETA                          /BGS 185
3155  4567          JMS I LWMOT                                                    /BGS 186
3156  4774          JMS I LSTCT         /COUNT FOR SPECIFIED TIME                  /BGS 187
3157     0  TIME,   0                                                             /BGS 188
3160  4775          JMS I LWTCT                                                    /BGS 189
3161   170          COUNT                                                          /BGS 190
3162  7402          HLT                                                            /BGS 191
3163  4407          JMS I LFPT          /COMPARE COUNT AND CMAX                    /BGS 192
3164  5170          FGET COUNT                                                     /BGS 193
3165  2127          FSUB CMAX                                                      /BGS 194
```

```
3166    0          FEXT                                                    /BGS 195
3167  1045         TAD HORD                                                /BGS 196
3170  7700         SMA CLA                                                 /BGS 197
3171  2337         ISZ STEP            /COUNT GREATER THAN CMAX, SET RETURN /BGS 198
3172  5737         JMP I STEP                                              /BGS 199
3173   517  LMOTST, MOTST                                                  /BGS 200
3174  2703  LSTCT,  STCT                                                   /BGS 201
3175  2721  LWTCT,  WTCT                                                   /BGS 202
3176   624  ADTTH,  TTH                                                    /BGS 203
3177   627  ADOMG,  OMG                                                    /BGS 204
                                                                           /BGS 205
            *5371                                                          /BGS 206
            /FIRST CONTINUATION OF /BG.                                    /BGS 207
5371  4426  CONT,   JMS I LFNP          /READ FRACTION OF MAXIMUM COUNT WHICH IS TO/BGS 208
5372  7777         -1                   /LOCATED                           /BGS 209
5373   121         FR                                                      /BGS 210
5374  4545         JMS I LWHERE         /SET FLOATING POINT ANGLES TO CURRENT POSIT/BGS 211
5375  5776         JMP I LCONT2                                            /BGS 212
5376  3000  LCONT2, CONT2                                                  /BGS 213
                                                                           /BGS 214
            *7633                                                          /BGS 215
            /SUBROUTINE TO CONVERGE ON SPECIFIED COUNT                     /BGS 216
7633    0  CONV,   0                                                       /BGS 217
7634  3101         DCA IND              /IND#0                             /BGS 218
7635  4407         JMS I LFPT                                              /BGS 219
7636  5146         FGET ONE             /SGN#+1                            /BGS 220
7637  6102         FPUT SGN                                                /BGS 221
7640  5105         FGET TTHM            /TTH#TTHM                          /BGS 222
7641  6711         FPUT I LTTH                                             /BGS 223
7642  5110         FGET OMGM            /OMG#OMGM                          /BGS 224
7643  6712         FPUT I LOMG                                             /BGS 225
7644    0          FEXT                                                    /BGS 226
7645  4407  CONV1,  JMS I LFPT                                             /BGS 227
7646  5113         FGET DEL             /DELTA#DEL*SGN                     /BGS 228
7647  3102         FMPY SGN                                                /BGS 229
7650  6116         FPUT DELTA                                              /BGS 230
7651    7          FABS                 /COMPARE ABSF(DEL) TO DELMIN       /BGS 231
7652  2306         FSUB DELMIN                                             /BGS 232
7653    0          FEXT                                                    /BGS 233
7654  1045         TAD HORD                                                /BGS 234
7655  7710         SPA CLA                                                 /BGS 235
7656  5633         JMP I CONV           /LESS THAN DELMIN, RETURN          /BGS 236
7657  4713  CONV2,  JMS I LSTEP          /STEP AND COUNT                    /BGS 237
7660  5276         JMP CONV4            /COUNT LESS THAN CMAX              /BGS 238
7661  4407         JMS I LFPT           /COUNT GREATER THAN CMAX           /BGS 239
7662  5146         FGET ONE             /SGN#+1                            /BGS 240
7663  6102         FPUT SGN                                                /BGS 241
7664    0          FEXT                                                    /BGS 242
7665  1101         TAD IND              /TEST IND                          /BGS 243
7666  7650         SNA CLA                                                 /BGS 244
7667  5257         JMP CONV2                                               /BGS 245
7670  4407  CONV3,  JMS I LFPT                                             /BGS 246
7671  5113         FGET DEL             /DEL#DEL/2                         /BGS 247
7672  4151         FDIV TWO                                                /BGS 248
7673  6113         FPUT DEL                                                /BGS 249
7674    0          FEXT                                                    /BGS 250
7675  5245         JMP CONV1                                               /BGS 251
7676  4407  CONV4,  JMS I LFPT           /SGN#-1                            /BGS 252
7677  5146         FGET ONE                                                /BGS 253
7700    6          FNEG                                                    /BGS 254
7701  6102         FPUT SGN                                                /BGS 255
7702    0          FEXT                                                    /BGS 256
7703  7001         IAC                  /IND#1                             /BGS 257
7704  3101         DCA IND                                                 /BGS 258
7705  5270         JMP CONV3                                               /BGS 259
7706  7771  DELMIN, 7771                /.00390625                         /BGS 260
7707  2000         2000                                                    /BGS 261
7710    0          0000                                                    /BGS 262
7711   624  LTTH,   TTH                                                    /BGS 263
7712   627  LOMG,   OMG                                                    /BGS 264
7713  3137  LSTEP,  STEP                                                   /BGS 265
```

```
                /MODIFICATION TO SETUP TO COMPUTE MATRIX FROM THREE REFLECTIONS          /MTS   1
                                                                                         /MTS   2
                MTHR#156                                                                 /MTS   3
                LFNP#26                                                                  /MTS   4
                TWO#151                                                                  /MTS   5
                LFPT#7                                                                   /MTS   6
                THR#154                                                                  /MTS   7
                LMM#33                                                                   /MTS   8
                LOMGA#66                                                                 /MTS   9
                LOPCH#70                                                                 /MTS  10
                LCOP#24                                                                  /MTS  11
                                                                                         /MTS  12
                *2255                                                                    /MTS  13
                /MODIFICATIONS TO KEYBOARD SIGNAL TABLE                                  /MTS  14
2255  1524            1524                /MT. MATRIX FROM THREE REFLECTIONS             /MTS  15
2256  4001            MT                                                                 /MTS  16
2257  2726            2726                /WV. READ WAVELENGTH                           /MTS  17
2260  4374            WAVE                                                               /MTS  18
                                                                                         /MTS  19
                *4000                                                                    /MTS  20
                /MT. GENERATE MATRIX MB FROM THREE REFLECTIONS                           /MTS  21
4000  4200  LINVRT, INVERT                                                               /MTS  22
4001  1156  MT,     TAD MTHR            /SET COUNTER TO OPERATE ON 3 REFLECTIONS       /MTS  23
4002  3125          DCA KMT                                                            /MTS  24
4003  1321          TAD LHPHI           /SET INITIAL ADDRESSES FOR MATRICES MADE UP/MTS  25
4004  3126          DCA THP             /THE VECTORS OF THE GIVEN INDICES AND THE V/MTS  26
4005  1314          TAD LHII            /IN THE PHI-AXIS SYSTEM                        /MTS  27
4006  3211          DCA TH                                                             /MTS  28
4007  4426  MTI,    JMS I LFNP          /READ INDICES OF ONE REFLECTION                /MTS  29
4010  7775          -3                                                                 /MTS  30
4011     0  TH,     0                                                                  /MTS  31
4012  4426          JMS I LFNP          /READ ANGLES OF ONE REFLECTION                 /MTS  32
4013  7774          -4                                                                 /MTS  33
4014   100          TTHI                                                               /MTS  34
4015  4407          JMS I LFPT                                                         /MTS  35
4016  5100          FGET TTHI           /COMPUTE LENGTH OF VECTOR, 2*SIN(THETA)/WVL/MTS  36
4017  4151          FDIV TWO                                                           /MTS  37
4020     3          FSIN                                                               /MTS  38
4021  3151          FMPY TWO                                                           /MTS  39
4022  4325          FDIV WVL                                                           /MTS  40
4023  6100          FPUT LENGTH                                                        /MTS  41
4024  5103          FGET OMGI                                                          /MTS  42
4025     3          FSIN                                                               /MTS  43
4026  6114          FPUT SINO           /SINO#SIN(OMEGA)                               /MTS  44
4027  5111          FGET PHII                                                          /MTS  45
4030     3          FSIN                                                               /MTS  46
4031  6117          FPUT SINP           /SINP#SIN(PHI)                                 /MTS  47
4032  3114          FMPY SINO                                                          /MTS  48
4033  6526          FPUT I THP                                                         /MTS  49
4034  5103          FGET OMGI                                                          /MTS  50
4035     4          FCOS                                                               /MTS  51
4036  6103          FPUT COSO           /COSO#COS(OMEGA)                               /MTS  52
4037  5106          FGET CHII                                                          /MTS  53
4040     4          FCOS                                                               /MTS  54
4041  6122          FPUT COSC           /COSC#COS(CHI)                                 /MTS  55
4042  5111          FGET PHII                                                          /MTS  56
4043     4          FCOS                                                               /MTS  57
4044  6111          FPUT COSP           /COSP#COS(PHI)                                 /MTS  58
4045  3122          FMPY COSC                                                          /MTS  59
4046  3103          FMPY COSO                                                          /MTS  60
4047  2526          FSUB I THP                                                         /MTS  61
4050  3100          FMPY LENGTH                                                        /MTS  62
4051  6526          FPUT I THP          /HPHI(1,I)#(COSO*COSC*COSP-SINO*SINP)*LENGT/MTS  63
4052     0          FEXT                                                               /MTS  64
4053  1126          TAD THP             /ADVANCE ADDRESS                               /MTS  65
4054  1154          TAD THR                                                            /MTS  66
4055  3126          DCA THP                                                            /MTS  67
4056  4407          JMS I LFPT                                                         /MTS  68
4057  5111          FGET COSP                                                          /MTS  69
4060  3114          FMPY SINO                                                          /MTS  70
4061  6526          FPUT I THP                                                         /MTS  71
4062  5103          FGET COSO                                                          /MTS  72
4063  3122          FMPY COSC                                                          /MTS  73
4064  3117          FMPY SINP                                                          /MTS  74
4065  1526          FADD I THP                                                         /MTS  75
4066  3100          FMPY LENGTH                                                        /MTS  76
4067  6526          FPUT I THP          /HPHI(2,I)#(COSO*COSC*SINP+SINO*COSP)*LENGT/MTS  77
4070     0          FEXT                                                               /MTS  78
4071  1126          TAD THP             /ADVANCE ADDRESS                               /MTS  79
4072  1154          TAD THR                                                            /MTS  80
4073  3126          DCA THP                                                            /MTS  81
```

```
4074  4407          JMS I LFPT                                                  /MTS  82
4075  5106          FGET CHII                                                   /MTS  83
4076     3          FSIN                                                        /MTS  84
4077  3103          FMPY COSO                                                   /MTS  85
4100  3100          FMPY LENGTH                                                 /MTS  86
4101  6526          FPUT I THP          /HPHI(3,I)#(COSC*SIN(CHI))*LENGTH       /MTS  87
4102     0          FEXT                                                        /MTS  88
4103  1126          TAD THP             /ADVANCE ADDRESSES                      /MTS  89
4104  1154          TAD THR                                                     /MTS  90
4105  3126          DCA THP                                                     /MTS  91
4106  1211          TAD TH                                                      /MTS  92
4107  1344          TAD NINE                                                    /MTS  93
4110  3211          DCA TH                                                      /MTS  94
4111  2125          ISZ KMT             /TEST COUNTER                           /MTS  95
4112  5207          JMP MT1             /RETURN FOR NEXT OBSERVATION            /MTS  96
4113  4600          JMS I LINVRT        /INVERT MATRIX FORMED FROM GIVEN INDICES /MTS  97
4114  4341  LHII,   HII                                                         /MTS  98
4115  1101          TAD D+1             /TEST DETERMINANT OF THAT MATRIX        /MTS  99
4116  7650          SNA CLA                                                     /MTS 100
4117  5340          JMP MT2             /IF ZERO, MATRIX IS SINGULAR            /MTS 101
4120  4433          JMS I LMM           /MATRIX MB IS PRODUCT OF HPHI MATRIX AND IN/MTS 102
4121  4145  LHPHI,  HPHI                /MATRIX                                 /MTS 103
4122   103          BII                                                         /MTS 104
4123  7600          MBII                                                        /MTS 105
4124  5330          JMP MT3             /NEXT 3 LOCATIONS RESERVED FOR WAVELENGTH /MTS 106
            WVL#4125                                                            /MTS 107
            *4130                                                               /MTS 108
4130  4600  MT3,    JMS I LINVRT        /USE SUBROUTINE INVERT TO COMPUTE DETERMINA/MTS 109
4131  7600          MBII                /MATRIX MB                              /MTS 110
4132  1101          TAD D+1             /TEST DETERMINANT                       /MTS 111
4133  7700          SMA CLA                                                     /MTS 112
4134  5466          JMP I LOMGA         /IF POSITIVE, RESULT OK, RETURN TO WAITING /MTS 113
4135  1343          TAD L               /IF NEGATIVE, VECTORS DESCRIBED IN LEFT-HAN/MTS 114
4136  4470          JMS I LOPCH         /COORDINATE SYSTEM, PRINT ERROR INDICATOR L/MTS 115
4137  5466          JMP I LOMGA         /GO TO WAITING LOOP                     /MTS 116
4140  1342  MT2,    TAD S               /REFLECTIONS COPLANAR, MATRIX SINGULAR, PRI/MTS 117
4141  5336          JMP .-3             /INDICATOR S                            /MTS 118
4142   323  S,      323                                                         /MTS 119
4143   314  L,      314                                                         /MTS 120
4144    11  NINE,   11                                                          /MTS 121
            HPHI#.                                                              /MTS 122
            HII#4341                                                            /MTS 123
            MBII#7600                                                           /MTS 124
            TTHI#100                                                            /MTS 125
            OMGI#TTHI+3                                                         /MTS 126
            CHII#OMGI+3                                                         /MTS 127
            PHII#CHII+3                                                         /MTS 128
            SINO#PHII+3                                                         /MTS 129
            SINP#SINO+3                                                         /MTS 130
            COSC#SINP+3                                                         /MTS 131
            KMT#COSC+3                                                          /MTS 132
            THP#KMT+1                                                           /MTS 133
            LENGTH#TTHI                                                         /MTS 134
            COSO#OMGI                                                           /MTS 135
            COSP#PHII                                                           /MTS 136
                                                                                /MTS 137
            *4200                                                               /MTS 138
            /SUBROUTINE TO INVERT 3X3 MATRIX AND STORE THE RESULT ON PAGE ZERO  /MTS 139
4200     0  INVERT, 0                                                           /MTS 140
4201  1600          TAD I INVERT        /GET ADDRESS OF MATRIX TO BE INVERTED   /MTS 141
4202  3206          DCA LMTX                                                    /MTS 142
4203  2200          ISZ INVERT                                                  /MTS 143
4204  4424          JMS I LOOP          /COPY MATRIX TO THIS PAGE               /MTS 144
4205  7745          -33                                                         /MTS 145
4206     0  LMTX,   0                                                           /MTS 146
4207  4341          AII                                                         /MTS 147
4210  4407          JMS I LFPT          /COMPUTE DETERMINANT                    /MTS 148
4211  5366          FGET A23                                                    /MTS 149
4212  3360          FMPY A32                                                    /MTS 150
4213  6133          FPUT TEMP                                                   /MTS 151
4214  5355          FGET A22                                                    /MTS 152
4215  3371          FMPY A33                                                    /MTS 153
4216  2133          FSUB TEMP                                                   /MTS 154
4217  6103          FPUT MII            /SAVE COFACTOR OF AII                   /MTS 155
4220  3341          FMPY AII                                                    /MTS 156
4221  6100          FPUT D                                                      /MTS 157
4222  5344          FGET A21                                                    /MTS 158
4223  3371          FMPY A33                                                    /MTS 159
4224  6133          FPUT TEMP                                                   /MTS 160
4225  5366          FGET A23                                                    /MTS 161
4226  3347          FMPY A31                                                    /MTS 162
```

```
4227  2133        FSUB TEMP                                                  /MTS 163
4230  6106        FPUT M21          /SAVE COFACTCR CF A12                    /MTS 164
4231  3352        FMPY A12                                                   /MTS 165
4232  1100        FADD D                                                     /MTS 166
4233  6100        FPUT D                                                     /MTS 167
4234  5355        FGET A22                                                   /MTS 168
4235  3347        FMPY A31                                                   /MTS 169
4236  6133        FPUT TEMP                                                  /MTS 170
4237  5344        FGET A21                                                   /MTS 171
4240  3360        FMPY A32                                                   /MTS 172
4241  2133        FSUB TEMP                                                  /MTS 173
4242  6111        FPUT M31          /SAVE COFACTCR CF A13                    /MTS 174
4243  3363        FMPY A13                                                   /MTS 175
4244  1100        FADD D                                                     /MTS 176
4245  6100        FPUT D            /STORE DETERMINANT                       /MTS 177
4246  5103        FGET M11          /INVERSE CF MATRIX # 1/DETERMINANT*ADJOINT /MTS 178
4247  4100        FDIV D                                                     /MTS 179
4250  6103        FPUT B11                                                   /MTS 180
4251  5106        FGET M21                                                   /MTS 181
4252  4100        FDIV D                                                     /MTS 182
4253  6106        FPUT B21                                                   /MTS 183
4254  5111        FGET M31                                                   /MTS 184
4255  4100        FDIV D                                                     /MTS 185
4256  6111        FPUT B31                                                   /MTS 186
4257  5352        FGET A12                                                   /MTS 187
4260  3371        FMPY A33                                                   /MTS 188
4261  6133        FPUT TEMP                                                  /MTS 189
4262  5363        FGET A13                                                   /MTS 190
4263  3360        FMPY A32                                                   /MTS 191
4264  2133        FSUB TEMP                                                  /MTS 192
4265  4100        FDIV D                                                     /MTS 193
4266  6114        FPUT B12                                                   /MTS 194
4267  5363        FGET A13                                                   /MTS 195
4270  3347        FMPY A31                                                   /MTS 196
4271  6133        FPUT TEMP                                                  /MTS 197
4272  5341        FGET A11                                                   /MTS 198
4273  3371        FMPY A33                                                   /MTS 199
4274  2133        FSUB TEMP                                                  /MTS 200
4275  4100        FDIV D                                                     /MTS 201
4276  6117        FPUT B22                                                   /MTS 202
4277  5341        FGET A11                                                   /MTS 203
4300  3360        FMPY A32                                                   /MTS 204
4301  6133        FPUT TEMP                                                  /MTS 205
4302  5347        FGET A31                                                   /MTS 206
4303  3352        FMPY A12                                                   /MTS 207
4304  2133        FSUB TEMP                                                  /MTS 208
4305  4100        FDIV D                                                     /MTS 209
4306  6122        FPUT B32                                                   /MTS 210
4307  5363        FGET A13                                                   /MTS 211
4310  3355        FMPY A22                                                   /MTS 212
4311  6133        FPUT TEMP                                                  /MTS 213
4312  5352        FGET A12                                                   /MTS 214
4313  3366        FMPY A23                                                   /MTS 215
4314  2133        FSUB TEMP                                                  /MTS 216
4315  4100        FDIV D                                                     /MTS 217
4316  6125        FPUT B13                                                   /MTS 218
4317  5341        FGET A11                                                   /MTS 219
4320  3366        FMPY A23                                                   /MTS 220
4321  6133        FPUT TEMP                                                  /MTS 221
4322  5344        FGET A21                                                   /MTS 222
4323  3363        FMPY A13                                                   /MTS 223
4324  2133        FSUB TEMP                                                  /MTS 224
4325  4100        FDIV D                                                     /MTS 225
4326  6130        FPUT B23                                                   /MTS 226
4327  5352        FGET A12                                                   /MTS 227
4330  3344        FMPY A21                                                   /MTS 228
4331  6133        FPUT TEMP                                                  /MTS 229
4332  5341        FGET A11                                                   /MTS 230
4333  3355        FMPY A22                                                   /MTS 231
4334  2133        FSUB TEMP                                                  /MTS 232
4335  4100        FDIV D                                                     /MTS 233
4336  6133        FPUT B33                                                   /MTS 234
4337     0        FEXT                                                       /MTS 235
4340  5600        JMP I INVERT      /RETURN                                  /MTS 236
            A11#.                                                            /MTS 237
            A21#A11+3                                                        /MTS 238
            A31#A21+3                                                        /MTS 239
            A12#A31+3                                                        /MTS 240
            A22#A12+3                                                        /MTS 241
            A32#A22+3                                                        /MTS 242
            A13#A32+3                                                        /MTS 243
```

```
                A23#A13+3                                                       /MTS 244
                A33#A23+3                                                       /MTS 245
                D#100                                                           /MTS 246
                B11#D+3                                                         /MTS 247
                B21#B11+3                                                       /MTS 248
                B31#B21+3                                                       /MTS 249
                B12#B31+3                                                       /MTS 250
                B22#B12+3                                                       /MTS 251
                B32#B22+3                                                       /MTS 252
                B13#B32+3                                                       /MTS 253
                B23#B13+3                                                       /MTS 254
                B33#B23+3                                                       /MTS 255
                M11#B11                                                         /MTS 256
                M21#B21                                                         /MTS 257
                M31#B31                                                         /MTS 258
                TEMP#B33                                                        /MTS 259
                                                                                /MTS 260
                *4374                                                           /MTS 261
                /WV. READ WAVELENGTH                                            /MTS 262
4374  4426      WAVE,    JMS I LFNP                                             /MTS 263
4375  7777               -1                                                     /MTS 264
4376  4125               WVL                                                    /MTS 265
4377  5466               JMP I LOMGA                                            /MTS 266
                                                                                /MTS 267


                /MODIFICATION TO SET-UP TO COMPUTE CELL PARAMETERS FROM MATRIX  /CAS   1
                                                                                /CAS   2
                MBTRAN#100                                                      /CAS   3
                GINV#4341                                                       /CAS   4
                G11#103                                                         /CAS   5
                G21#G11+3                                                       /CAS   6
                G31#G21+3                                                       /CAS   7
                G12#G31+3                                                       /CAS   8
                G22#G12+3                                                       /CAS   9
                G32#G22+3                                                       /CAS  10
                G13#G32+3                                                       /CAS  11
                G23#G13+3                                                       /CAS  12
                G33#G23+3                                                       /CAS  13
                LTRN#32                                                         /CAS  14
                MB11#7600                                                       /CAS  15
                LMM#33                                                          /CAS  16
                LFPT#7                                                          /CAS  17
                THR#154                                                         /CAS  18
                LOMGA#66                                                        /CAS  19
                VFOUT#7200                                                      /CAS  20
                LCOP#24                                                         /CAS  21
                LFNP#26                                                         /CAS  22
                WVL#4125                                                        /CAS  23
                                                                                /CAS  24
                *2255                                                           /CAS  25
2255   301              0301                /CA. COMPUTE CELL PARAMETERS FROM MATRIX  /CAS  26
2256  4000              CELL                                                    /CAS  27
2257  2726              2726                /WV. READ WAVELENGTH.               /CAS  28
2260  4374              WAVE                                                    /CAS  29
                                                                                /CAS  30
                *4000                                                           /CAS  31
                /CA. COMPUTE CELL PARAMETERS FROM MATRIX                        /CAS  32
4000  4432      CELL,    JMS I LTRN          /TRANSPOSE MATRIX MB               /CAS  33
4001  7600               MB11                                                   /CAS  34
4002   100               MBTRAN                                                 /CAS  35
4003  4433               JMS I LMM           /G-INVERSE # MB-TRANSPOSE * MB     /CAS  36
4004   100               MBTRAN                                                 /CAS  37
4005  7600               MB11                                                   /CAS  38
4006  4341               GINV                                                   /CAS  39
4007  4665               JMS I LINVT         /INVERT G-INVERSE, RESULT ON PAGE ZERO  /CAS  40
4010  4341               GINV                                                   /CAS  41
4011  4407               JMS I LFPT          /COMPUTE CELL PARAMETERS           /CAS  42
4012  5103               FGET G11            /A1#SQRT(G11)                      /CAS  43
4013     2               FSQT                                                   /CAS  44
4014  6330               FPUT A1                                                /CAS  45
4015  5117               FGET G22            /A2#SQRT(G22)                      /CAS  46
4016     2               FSQT                                                   /CAS  47
4017  6333               FPUT A2                                                /CAS  48
4020  5133               FGET G33            /A3#SQRT(G33)                      /CAS  49
4021     2               FSQT                                                   /CAS  50
4022  6336               FPUT A3                                                /CAS  51
4023  5130               FGET G23            /COSI#G23/(A2*A3)                  /CAS  52
4024  4333               FDIV A2                                                /CAS  53
```

```
4025  4336          FDIV A3                                                  /CAS  54
4026  6341          FPUT COS1                                                /CAS  55
4027  5125          FGET G13            /COS2#G13/(A1*A3)                    /CAS  56
4030  4330          FDIV A1                                                  /CAS  57
4031  4336          FDIV A3                                                  /CAS  58
4032  6344          FPUT COS2                                                /CAS  59
4033  5114          FGET G12            /COS3#G12/(A1*A2)                    /CAS  60
4034  4330          FDIV A1                                                  /CAS  61
4035  4333          FDIV A2                                                  /CAS  62
4036  6347          FPUT COS3                                                /CAS  63
4037     0          FEXT                                                     /CAS  64
4040  1260          TAD MIN6            /SET COUNTER FOR LOOP TO PRINT RESULTS /CAS  65
4041  3261          DCA KCELL                                                /CAS  66
4042  1262          TAD LA1             /SET INITIAL ADDRESS                 /CAS  67
4043  3263          DCA CELLAD                                               /CAS  68
4044  4407  CELL1,  JMS I LFPT          /GET CELL PARAMETER                  /CAS  69
4045  5663          FGET I CELLAD                                            /CAS  70
4046     0          FEXT                                                     /CAS  71
4047  4664          JMS I LVFOUT        /PRINT CELL PARAMETER                /CAS  72
4050     2          2                                                        /CAS  73
4051     5          5                                                        /CAS  74
4052  1263          TAD CELLAD          /ADVANCE ADDRESS                     /CAS  75
4053  1154          TAD THR                                                  /CAS  76
4054  3263          DCA CELLAD                                               /CAS  77
4055  2261          ISZ KCELL           /TEST COUNTER                        /CAS  78
4056  5244          JMP CELL1           /PRINT NEXT CELL PARAMETERS          /CAS  79
4057  5466          JMP I LOMGA         /RETURN TO WAITING LOOP              /CAS  80
4060  7772  MIN6,   -6                                                       /CAS  81
4061     0  KCELL,  0                                                       /CAS  82
4062  4130  LA1,    A1                                                       /CAS  83
4063     0  CELLAD, 0                                                       /CAS  84
4064  7200  LVFOUT, VFOUT                                                    /CAS  85
4065  4200  LINVT,  INVERT                                                   /CAS  86
            A1#WVL+3                                                        /CAS  87
            A2#A1+3                                                         /CAS  88
            A3#A2+3                                                         /CAS  89
            COS1#A3+3                                                       /CAS  90
            COS2#COS1+3                                                     /CAS  91
            COS3#COS2+3                                                     /CAS  92
                                                                            /CAS  93
            *4200                                                           /CAS  94
            /SUBROUTINE TO INVERT 3X3 MATRIX AND STORE THE RESULT ON PAGE ZERO /CAS  95
4200     0  INVERT, 0                                                       /CAS  96
4201  1600          TAD I INVERT        /GET ADDRESS OF MATRIX TO BE INVERTED /CAS  97
4202  3206          DCA LMTX                                                 /CAS  98
4203  2200          ISZ INVERT                                               /CAS  99
4204  4424          JMS I LOOP          /COPY MATRIX TO THIS PAGE            /CAS 100
4205  7745          -33                                                      /CAS 101
4206     0  LMTX,   0                                                       /CAS 102
4207  4341          A11                                                      /CAS 103
4210  4407          JMS I LFPT          /COMPUTE DETERMINANT                 /CAS 104
4211  5366          FGET A23                                                 /CAS 105
4212  3360          FMPY A32                                                 /CAS 106
4213  6133          FPUT TEMP                                                /CAS 107
4214  5355          FGET A22                                                 /CAS 108
4215  3371          FMPY A33                                                 /CAS 109
4216  2133          FSUB TEMP                                                /CAS 110
4217  6103          FPUT M11            /SAVE COFACTOR OF A11                /CAS 111
4220  3341          FMPY A11                                                 /CAS 112
4221  6100          FPUT D                                                   /CAS 113
4222  5344          FGET A21                                                 /CAS 114
4223  3371          FMPY A33                                                 /CAS 115
4224  6133          FPUT TEMP                                                /CAS 116
4225  5366          FGET A23                                                 /CAS 117
4226  3347          FMPY A31                                                 /CAS 118
4227  2133          FSUB TEMP                                                /CAS 119
4230  6106          FPUT M21            /SAVE COFACTOR OF A12                /CAS 120
4231  3352          FMPY A12                                                 /CAS 121
4232  1100          FADD D                                                   /CAS 122
4233  6100          FPUT D                                                   /CAS 123
4234  5355          FGET A22                                                 /CAS 124
4235  3347          FMPY A31                                                 /CAS 125
4236  6133          FPUT TEMP                                                /CAS 126
4237  5344          FGET A21                                                 /CAS 127
4240  3360          FMPY A32                                                 /CAS 128
4241  2133          FSUB TEMP                                                /CAS 129
4242  6111          FPUT M31            /SAVE COFACTOR OF A13                /CAS 130
4243  3363          FMPY A13                                                 /CAS 131
4244  1100          FADD D                                                   /CAS 132
4245  6100          FPUT D              /STORE DETERMINANT                   /CAS 133
4246  5103          FGET M11            /INVERSE OF MATRIX # 1/DETERMINANT*ADJOINT /CAS 134
```

```
4247  4100        FDIV D                                  /CAS 135
4250  6103        FPUT B11                                /CAS 136
4251  5106        FGET M21                                /CAS 137
4252  4100        FDIV D                                  /CAS 138
4253  6106        FPUT B21                                /CAS 139
4254  5111        FGET M31                                /CAS 140
4255  4100        FDIV D                                  /CAS 141
4256  6111        FPUT B31                                /CAS 142
4257  5352        FGET A12                                /CAS 143
4260  3371        FMPY A33                                /CAS 144
4261  6133        FPUT TEMP                               /CAS 145
4262  5363        FGET A13                                /CAS 146
4263  3360        FMPY A32                                /CAS 147
4264  2133        FSUB TEMP                               /CAS 148
4265  4100        FDIV D                                  /CAS 149
4266  6114        FPUT B12                                /CAS 150
4267  5363        FGET A13                                /CAS 151
4270  3347        FMPY A31                                /CAS 152
4271  6133        FPUT TEMP                               /CAS 153
4272  5341        FGET A11                                /CAS 154
4273  3371        FMPY A33                                /CAS 155
4274  2133        FSUB TEMP                               /CAS 156
4275  4100        FDIV D                                  /CAS 157
4276  6117        FPUT B22                                /CAS 158
4277  5341        FGET A11                                /CAS 159
4300  3360        FMPY A32                                /CAS 160
4301  6133        FPUT TEMP                               /CAS 161
4302  5347        FGET A31                                /CAS 162
4303  3352        FMPY A12                                /CAS 163
4304  2133        FSUB TEMP                               /CAS 164
4305  4100        FDIV D                                  /CAS 165
4306  6122        FPUT B32                                /CAS 166
4307  5363        FGET A13                                /CAS 167
4310  3355        FMPY A22                                /CAS 168
4311  6133        FPUT TEMP                               /CAS 169
4312  5352        FGET A12                                /CAS 170
4313  3366        FMPY A23                                /CAS 171
4314  2133        FSUB TEMP                               /CAS 172
4315  4100        FDIV D                                  /CAS 173
4316  6125        FPUT B13                                /CAS 174
4317  5341        FGET A11                                /CAS 175
4320  3366        FMPY A23                                /CAS 176
4321  6133        FPUT TEMP                               /CAS 177
4322  5344        FGET A21                                /CAS 178
4323  3363        FMPY A13                                /CAS 179
4324  2133        FSUB TEMP                               /CAS 180
4325  4100        FDIV D                                  /CAS 181
4326  6130        FPUT B23                                /CAS 182
4327  5352        FGET A12                                /CAS 183
4330  3344        FMPY A21                                /CAS 184
4331  6133        FPUT TEMP                               /CAS 185
4332  5341        FGET A11                                /CAS 186
4333  3355        FMPY A22                                /CAS 187
4334  2133        FSUB TEMP                               /CAS 188
4335  4100        FDIV D                                  /CAS 189
4336  6133        FPUT B33                                /CAS 190
4337     0        FEXT                                    /CAS 191
4340  5600        JMP I INVERT          /RETURN           /CAS 192
            A11#.                                         /CAS 193
            A21#A11+3                                     /CAS 194
            A31#A21+3                                     /CAS 195
            A12#A31+3                                     /CAS 196
            A22#A12+3                                     /CAS 197
            A32#A22+3                                     /CAS 198
            A13#A32+3                                     /CAS 199
            A23#A13+3                                     /CAS 200
            A33#A23+3                                     /CAS 201
            D#100                                         /CAS 202
            B11#D+3                                       /CAS 203
            B21#B11+3                                     /CAS 204
            B31#B21+3                                     /CAS 205
            B12#B31+3                                     /CAS 206
            B22#B12+3                                     /CAS 207
            B32#B22+3                                     /CAS 208
            B13#B32+3                                     /CAS 209
            B23#B13+3                                     /CAS 210
            B33#B23+3                                     /CAS 211
            M11#B11                                       /CAS 212
            M21#B21                                       /CAS 213
            M31#B31                                       /CAS 214
            TEMP#B33                                      /CAS 215
```

```
                                                                        /CAS 216
          *4374                                                         /CAS 217
          /WV. READ WAVELENGTH                                          /CAS 218
4374  4426  WAVE,   JMS I LFNP                                          /CAS 219
4375  7777          -1                                                  /CAS 220
4376  4125          WVL                                                 /CAS 221
4377  5466          JMP I LOMGA                                         /CAS 222
                                                                        /CAS 223


          /VV. COMPUTE THE ANGLE BETWEEN TWO OBSERVED VECTORS           /VVS   1
          /MODIFICATION OF SET-UP PROGRAM                               /VVS   2
                                                                        /VVS   3
                 MTWO#155                                               /VVS   4
                 LOOP#24                                                /VVS   5
                 LFNP#26                                                /VVS   6
                 LFPT#7                                                 /VVS   7
                 LVV#72                                                 /VVS   8
                 COSA#5507                                              /VVS   9
                 LFOT#6                                                 /VVS  10
                 ONE#146                                                /VVS  11
                 OMG#100                                                /VVS  12
                 CHI#103                                                /VVS  13
                 PHI#106                                                /VVS  14
                 V1#111                                                 /VVS  15
                 V2#114                                                 /VVS  16
                 V3#117                                                 /VVS  17
                 TEM1#122                                               /VVS  18
                 SINO#OMG                                               /VVS  19
                 COSP#CHI                                               /VVS  20
                 SINP#PHI                                               /VVS  21
                 U1#125                                                 /VVS  22
                 K#136                                                  /VVS  23
                 LOMGA#66                                               /VVS  24
                  OMGA#210                                              /VVS  25
                                                                        /VVS  26
          *2255                                                         /VVS  27
2255  2626          2626                /VV IN SIGNAL TABLE             /VVS  28
2256  4200          AVV                 /   (DELETES /CB AND /CU)       /VVS  29
2257     0           0000                                               /VVS  30
2260   210           OMGA                                               /VVS  31
                                                                        /VVS  32
          *4200                                                         /VVS  33
4200  1155  AVV,    TAD MTWO            /SET COUNTER                    /VVS  34
4201  3136          DCA K                                               /VVS  35
4202  4424  VEC,    JMS I LOOP          /MOVE VECTOR V TO U             /VVS  36
4203  7767          -11                 /   (ONLY SECOND MOVE           /VVS  37
4204   111          VI                  /    IS SIGNIFICANT)            /VVS  38
4205   125          UI                                                  /VVS  39
4206  4426          JMS I LFNP          /READ OMEGA, CHI, AND PHI       /VVS  40
4207  7775          -3                                                  /VVS  41
4210   100          OMG                                                 /VVS  42
4211  4407          JMS I LFPT          /COMPUTE VECTOR V               /VVS  43
4212  5103        FGET        CHI                                       /VVS  44
4213     4        FCOS                                                  /VVS  45
4214  6277        FPUT        COSC                                      /VVS  46
4215  5100        FGET        OMG                                       /VVS  47
4216     4        FCOS                                                  /VVS  48
4217  6302        FPUT        COSO                                      /VVS  49
4220  3277        FMPY        COSC                                      /VVS  50
4221  6122        FPUT        TEMI      /SAVE PRODUCT OF COS(CHI) AND COS(OMEGA).  /VVS  51
4222  5103        FGET        CHI                                       /VVS  52
4223     3        FSIN                                                  /VVS  53
4224  3302        FMPY        COSO                                      /VVS  54
4225  6117          FPUT V3             /SIN(CHI)*COS(OMEGA)            /VVS  55
4226  5106        FGET        PHI                                       /VVS  56
4227     4        FCOS                                                  /VVS  57
4230  6103        FPUT        COSP                                      /VVS  58
4231  5100        FGET        OMG                                       /VVS  59
4232     3        FSIN                                                  /VVS  60
4233  6100        FPUT        SINO                                      /VVS  61
4234  3103        FMPY        COSP                                      /VVS  62
4235  6274        FPUT        TEM2      /STORE SIN(OMEGA)*COS(PHI).     /VVS  63
4236  5106        FGET        PHI                                       /VVS  64
4237     3        FSIN                                                  /VVS  65
4240  6106        FPUT        SINP                                      /VVS  66
4241  3122        FMPY        TEMI                                      /VVS  67
4242  1274        FADD        TEM2                                      /VVS  68
4243  6114          FPUT V2             /SIN(PHI)*COS(CHI)*COS(OMEGA)   /VVS  69
4244  5100        FGET        SINO      /                 +COS(PHI)*SIN(OMEGA).  /VVS  70
```

```
4245  3106          FMPY        SINP                                          /VVS  71
4246  6274          FPUT        TEM2     /STORE SIN(OMEGA)*SIN(PHI).          /VVS  72
4247  5103          FGET        COSP                                          /VVS  73
4250  3122          FMPY        TEM1                                          /VVS  74
4251  2274          FSUB        TEM2                                          /VVS  75
4252  6111            FPUT VI              /COS(PHI)*COS(CHI)*COS(OMEGA)      /VVS  76
4253     0          FEXT                 /                    -SIN(PHI)*SIN(OMEGA).  /VVS  77
4254  2136            ISZ K                /TEST LOOP                         /VVS  78
4255  5202            JMP VEC                                                 /VVS  79
4256  4472            JMS I LVV            /COS(A)#V*U                        /VVS  80
4257   125            U1                                                      /VVS  81
4260   111            V1                                                      /VVS  82
4261  5507            COSA                 /STORE FOR ATAN                    /VVS  83
4262  4407            JMS I LFPT           /COMPUTE ANGLE                     /VVS  84
4263  3673            FMPY I LCOSA                                            /VVS  85
4264     6            FNEG                                                    /VVS  86
4265  1146            FADD ONE                                                /VVS  87
4266     2            FSQT                                                    /VVS  88
4267     5            FATN                                                    /VVS  89
4270     0            FEXT                                                    /VVS  90
4271  4406            JMS I LFOT           /PRINT ANGLE                       /VVS  91
4272  5466            JMP I LOMGA          /TO WAITING LOOP                   /VVS  92
4273  5507  LCOSA,    COSA                                                    /VVS  93
4274     0  TEM2,     0                                                       /VVS  94
4275     0            0                                                       /VVS  95
4276     0            0                                                       /VVS  96
4277     0  COSC,     0                                                       /VVS  97
4300     0            0                                                       /VVS  98
4301     0            0                                                       /VVS  99
4302     0  COSO,     0                                                       /VVS 100
4303     0            0                                                       /VVS 101
4304     0            0                                                       /VVS 102


           /ORIENTATION LEAST SQUARES                                        /LSQ   1
                                                                             /LSQ   2
           VFOUT#7200                                                        /LSQ   3
           SMI#364                                                           /LSQ   4
           BATN#5507                                                         /LSQ   5
           ZERO#5107                                                         /LSQ   6
           WVL#4117                                                          /LSQ   7
           CALBB#4000                                                        /LSQ   8
           CALMB#4200                                                        /LSQ   9
           HI#4341                                                           /LSQ  10
           OMGM#HI+11                                                        /LSQ  11
           MB11#7600                                                         /LSQ  12
                                                                             /LSQ  13
           /PAGE ZERO                                                        /LSQ  14
           IRET#1                       /IRET#1 FOR PDP-5, IRET#0 FOR PDP-8  /LSQ  15
           *IRET+1                                                           /LSQ  16
   2  5403          JMP I LINT                                              /LSQ  17
   3   212  LINT,   INT                                                     /LSQ  18
           *4                                                                /LSQ  19
   4     0  NV,      0                                                       /LSQ  20
   5  7400  LFNK,    7400                                                    /LSQ  21
   6  7460  LFOT,    7460                                                    /LSQ  22
   7  5600  LFPT,    5600                                                    /LSQ  23
  10     0            0                    /LOCATIONS 10-17 ARE AUTO INDEX REGISTERS /LSQ  24
  11     0            0                                                       /LSQ  25
  12     0            0                                                       /LSQ  26
  13     0            0                                                       /LSQ  27
  14     0            0                                                       /LSQ  28
  15     0            0                                                       /LSQ  29
  16     0            0                                                       /LSQ  30
  17     0  TSGNL,    0                    /USED BY KEYBOARD SIGNAL ROUTINE.  /LSQ  31
  20  5303  LNEG,     5303                 /LOCATIONS OF SUBROUTINES          /LSQ  32
  21  5572  LABS,     5572                                                    /LSQ  33
  22  5400  LART,     5400                                                    /LSQ  34
  23  4501  LADR,     4501                                                    /LSQ  35
  24  4761  LCOP,     4761                                                    /LSQ  36
  25  5114  LMV,      5114                                                    /LSQ  37
  26  4600  LFNP,     4600                                                    /LSQ  38
  27  4617  LFOP,     4617                                                    /LSQ  39
  30  4636  LUNT,     4636                                                    /LSQ  40
  31  4702  LPRP,     4702                                                    /LSQ  41
  32  5000  LTRN,     5000                                                    /LSQ  42
  33  5146  LMM,      5146                                                    /LSQ  43
  34  5550  LFIX,     5550                                                    /LSQ  44
  35     0  MNSNV,    0                                                       /LSQ  45
  36  3340  LKI,      KI                                                      /LSQ  46
```

```
 37  3247  LP,      PI                                                    /LSQ  47
 40     0  EXI,     0                    /USED BY F.P. INTERPRETER        /LSQ  48
 41     0  ACIH,    0                                                     /LSQ  49
 42     0  ACIL,    0                                                     /LSQ  50
 43     0  OVRI,    0                                                     /LSQ  51
 44     0  EXP,     0                    /FLOATING POINT ACCUMULATOR      /LSQ  52
 45     0  HORD,    0                                                     /LSQ  53
 46     0  LORD,    0                                                     /LSQ  54
 47     0  OVR2,    0                                                     /LSQ  55
 50     0  EXP1,    0                                                     /LSQ  56
 51     0  QUOL,    0                                                     /LSQ  57
 52     0  FACI,    0                                                     /LSQ  58
 53     0  '        0                                                     /LSQ  59
 54     0           0                                                     /LSQ  60
 55     0  HI,      0                                                     /LSQ  61
 56     0  LO,      0                                                     /LSQ  62
 57     0  CHAR, SCK, TEMP, 0                                             /LSQ  63
 60     0  SIGN,    0                                                     /LSQ  64
 61     0  FLAG,    0                                                     /LSQ  65
 62     0  NO,      0                                                     /LSQ  66
 63  3005  LAI,     AI                                                    /LSQ  67
 64  7466  LIOUT,   7466                                                  /LSQ  68
 65   234  LTSIN,   TSIN                                                  /LSQ  69
 66   203  LOMGA,   OMGA                                                  /LSQ  70
 67  2121  LIPCH,   IPCH                                                  /LSQ  71
 70  1260  LOPCH,   OPCH                                                  /LSQ  72
 71  5354  LFLT,    5354                                                  /LSQ  73
 72  5045  LVV,     5045                                                  /LSQ  74
 73  7000  LINTIN,  7000                                                  /LSQ  75
 74  2204  LADV3,   ADV3                                                  /LSQ  76
 75    15  NP,      15                                                    /LSQ  77
 76  6766  LCRLF,   6766                                                  /LSQ  78
 77  1555  LYO,     YO                                                    /LSQ  79
100     0  KKI,     0                                                     /LSQ  80
101     0  ADKI,    0                                                     /LSQ  81
102     0           0                                                     /LSQ  82
103     0  LYCALC, 0                                                      /LSQ  83
104     0  HPHI1,UNITP1,CHI1,UNITC1,0                                     /LSQ  84
105     0           0                                                     /LSQ  85
106     0           0                                                     /LSQ  86
107     0  HPHI2,UNITP2,CHI2,UNITC2,0                                     /LSQ  87
110     0           0                                                     /LSQ  88
111     0           0                                                     /LSQ  89
112     0  HPHI3,UNITP3,UNITO3,0                                          /LSQ  90
113     0           0                                                     /LSQ  91
114     0           0                                                     /LSQ  92
115     0  Q,SINC,UNITC1,TWT1,0                                           /LSQ  93
116     0           0                                                     /LSQ  94
117     0           0                                                     /LSQ  95
120     0  UNITC2,TWT2,0                                                  /LSQ  96
121     0           0                                                     /LSQ  97
122     0           0                                                     /LSQ  98
123     0  UNITC3,OMG1,0                                                  /LSQ  99
124     0           0                                                     /LSQ 100
125     0           0                                                     /LSQ 101
126     0  SINT,THTA,OMG2,YD,0                                            /LSQ 102
127     0           0                                                     /LSQ 103
130     0           0                                                     /LSQ 104
131     0  SQSIG,    0                                                     /LSQ 105
132     0           0                                                     /LSQ 106
133     0           0                                                     /LSQ 107
        *0140                                                             /LSQ 108
140     6  DEG,     0006                 /CONSTANTS                       /LSQ 109
141  3451           3451                                                  /LSQ 110
142  3560           3560                                                  /LSQ 111
143  7774  MIN4,    -4                                                    /LSQ 112
144  4400  LTREQ,   TREQ                                                  /LSQ 113
145  5507  ADRB,    BATN                                                  /LSQ 114
146     1  ONE,     0001                                                  /LSQ 115
147  2000           2000                                                  /LSQ 116
150     0           0000                                                  /LSQ 117
151     2  TWO,     0002                                                  /LSQ 118
152  2000           2000                                                  /LSQ 119
153     0           0000                                                  /LSQ 120
154     3  THR,     3                                                     /LSQ 121
155  7776  MTWO,    7776                                                  /LSQ 122
156  7775  MTHR,    7775                                                  /LSQ 123
157     0  TYIND,   0                                                     /LSQ 124
160     0  TYPEW,IJD,CADV2,0                                              /LSQ 125
161     0  H,II,CNV1,0                                                    /LSQ 126
162     0  K,IID,0                                                        /LSQ 127
```

```
163     0  L,DIAG,0                                                          /LSQ 128
164     0  TTH,CNV2,0                                                        /LSQ 129
165     0  TLKI,    0                                                        /LSQ 130
166     0          0                                                        /LSQ 131
167     0  OMG,CNP,0                                                         /LSQ 132
170     0  KNSP,    0                                                        /LSQ 133
171     0          0                                                        /LSQ 134
172     0  CHI,     0                                                        /LSQ 135
173     0          0                                                        /LSQ 136
174     0          0                                                        /LSQ 137
175     0  PHI,     0                                                        /LSQ 138
176     0          0                                                        /LSQ 139
177     0          0                                                        /LSQ 140
                                                                            /LSQ 141
           /INITIALIZE AND WAIT FOR KEYBOARD SIGNAL                         /LSQ 142
           *200                                                             /LSQ 143
200  4610  INWT,    JMS I LINK          /INITIALIZE KEYBOARD/READER         /LSQ 144
201  4607           JMS I LINP          /INITIALIZE TELEPRINTER/PUNCH       /LSQ 145
202  6001           ION                 /ENABLE INTERRUPTS                  /LSQ 146
203  4476  OMGA,    JMS I LCRLF         /CR,LF                              /LSQ 147
204  1211           TAD ACWT            /DISPLAY 7070                       /LSQ 148
205  7000           NOP                                                     /LSQ 149
206  5205           JMP .-1             /WAITING LOOP                       /LSQ 150
207  1307  LINP,    INIP                                                    /LSQ 151
210  2130  LINK,    INIK                                                    /LSQ 152
211  7070  ACWT,    7070                                                    /LSQ 153
                                                                            /LSQ 154
212  3232  INT,     DCA SVAC            /SAVE AC AND LINK                   /LSQ 155
213  7204           CLA RAL                                                 /LSQ 156
214  3233           DCA SVLK                                                /LSQ 157
215  6041           TSF                 /SKIP IF TELEPRINTER                /LSQ 158
216  7410           SKP                                                     /LSQ 159
217  5630           JMP I LTEL                                              /LSQ 160
220  6031           KSF                 /SKIP IF KEYBOARD                   /LSQ 161
221  7410           SKP                                                     /LSQ 162
222  5631           JMP I LKEY                                              /LSQ 163
223  6311           6311                /TURN OFF CLOCK FLAG                /LSQ 164
224  7240           CLA CMA             /CLEAR STATUS FLAGS                 /LSQ 165
225  6304           6304                                                    /LSQ 166
226  7200           CLA                                                     /LSQ 167
227  5234           JMP TSIN            /IGNORE CLOCK AND STATUS FLAGS      /LSQ 168
230  1220  LTEL,    TELE                                                    /LSQ 169
231  2000  LKEY,    KEYB                                                    /LSQ 170
232     0  SVAC,    0                                                       /LSQ 171
233     0  SVLK,    0                                                       /LSQ 172
           /TERMINATE INTERRUPT                                             /LSQ 173
234  1233  TSIN,    TAD SVLK            /RESTORE AC AND LINK                /LSQ 174
235  7110           CLL RAR                                                 /LSQ 175
236  1232           TAD SVAC                                                /LSQ 176
237  6001           ION                                                     /LSQ 177
240  5401           JMP I IRET                                              /LSQ 178
                                                                            /LSQ 179
           /RO. READ OBSERVATIONS (MAXIMUM NUMBER IS 12.)                   /LSQ 180
241  1267  RDOBS,   TAD M12             /SET COUNTER TO LIMIT NUMBER OF OBSERVATION/LSQ 181
242  3273           DCA KOBS1                                               /LSQ 182
243  3671           DCA I LNR           /SET NR#0                           /LSQ 183
244  1272           TAD LOBS            /SET ADDRESS                        /LSQ 184
245  3257           DCA TOBS                                                /LSQ 185
246  1143  RDOBS1,  TAD MIN4            /SET COUNTER FOR INPUT LOOP         /LSQ 186
247  3274           DCA KOBS2                                               /LSQ 187
250  4473  RDOBS2,  JMS I LINTIN        /READ TYPE WORD, H, K, L            /LSQ 188
251  3657           DCA I TOBS                                              /LSQ 189
252  2257           ISZ TOBS                                                /LSQ 190
253  2274           ISZ KOBS2                                               /LSQ 191
254  5250           JMP RDOBS2                                              /LSQ 192
255  4426           JMS I LFNP          /READ 2THETA, OMEGA, CHI, PHI       /LSQ 193
256  7774           -4                                                      /LSQ 194
257     0  TOBS,    0                                                       /LSQ 195
260  2671           ISZ I LNR           /NR#NR+1                            /LSQ 196
261  1270           TAD C12             /ADVANCE ADDRESS                    /LSQ 197
262  1257           TAD TOBS                                                /LSQ 198
263  3257           DCA TOBS                                                /LSQ 199
264  2273           ISZ KOBS1           /TEST COUNTER                       /LSQ 200
265  5246           JMP RDOBS1                                              /LSQ 201
266  5466           JMP I LOMGA         /GO TO WAITING LOOP                 /LSQ 202
267  7764  M12,     -14                                                     /LSQ 203
270    14  C12,     14                                                      /LSQ 204
271  1154  LNR,     NR                                                      /LSQ 205
272  3410  LOBS,    OBS                                                     /LSQ 206
273     0  KOBS1,   0                                                       /LSQ 207
274     0  KOBS2,   0                                                       /LSQ 208
```

```
                                                                                /LSQ 209
        *1000                                                                   /LSQ 210
        /LS. PERFORM LEAST SQUARES CYCLE                                        /LSQ 211
1000  7001  ORGLS,  IAC                 /LEAST SQUARES CYCLE, NVI#1             /LSQ 212
        /YC. CALCULATE Y AND COMPARE WITH OBSERVED VALUE                        /LSQ 213
1001  3373  CALCY,  DCA NVI             /COMPUTE YC AND COMPARE WITH YO, NVI#0  /LSQ 214
1002  1365         TAD NLOC             /CLEAR MATRIX AND VECTOR LOCATIONS      /LSQ 215
1003  3366         DCA KTR1                                                     /LSQ 216
1004  7040         CMA                                                          /LSQ 217
1005  1063         TAD LA1                                                      /LSQ 218
1006  3010         DCA I0                                                       /LSQ 219
1007  3410  LS1,   DCA I I0                                                     /LSQ 220
1010  2366         ISZ KTR1                                                     /LSQ 221
1011  5207         JMP LS1                                                      /LSQ 222
1012  1035         TAD MNSNV            /SET UP ORDER OF MATRIX FOR SMI         /LSQ 223
1013  3346         DCA ORD                                                      /LSQ 224
1014  3062         DCA NO               /NO#0                                   /LSQ 225
1015  3370         DCA SIG              /SIG#0                                  /LSQ 226
1016  3371         DCA SIG+1                                                    /LSQ 227
1017  3372         DCA SIG+2                                                    /LSQ 228
1020  1354         TAD NR               /SET COUNTER FOR LOOP THROUGH OBSERVED REFL/LSQ 229
1021  7041         CIA                                                          /LSQ 230
1022  3366         DCA KTR1                                                     /LSQ 231
1023  1355         TAD AOBS             /SET UP STARTING ADDRESS OF OBSERVED REFLEC/LSQ 232
1024  3227         DCA ADRO                                                     /LSQ 233
1025  4424  LS2,   JMS I LCOP           /COPY DATA FOR REFLECTION TO PAGE ZERO. /LSQ 234
1026  7760         -20                                                          /LSQ 235
1027     0  ADRO,  0                                                            /LSQ 236
1030   160  AHMI,  TYPEW                                                        /LSQ 237
1031  1230         TAD AHMI             /FLOAT INDICES                          /LSQ 238
1032  3010         DCA I0                                                       /LSQ 239
1033  1356         TAD LFH                                                      /LSQ 240
1034  3245         DCA TEM1                                                     /LSQ 241
1035  1156         TAD MTHR                                                     /LSQ 242
1036  3367         DCA TEM2                                                     /LSQ 243
1037  1410  FLIND, TAD I I0                                                     /LSQ 244
1040  4471         JMS I LFLT                                                   /LSQ 245
1041  4407         JMS I LFPT                                                   /LSQ 246
1042  6645         FPUT I TEM1                                                  /LSQ 247
1043     0         FEXT                                                         /LSQ 248
1044  4474         JMS I LADV3                                                  /LSQ 249
1045     0  TEM1,  0                                                            /LSQ 250
1046  2367         ISZ TEM2                                                     /LSQ 251
1047  5237         JMP FLIND                                                    /LSQ 252
1050  1357         TAD MIN5             /SET COUNTER FOR TESTING TYPE WORD      /LSQ 253
1051  3367         DCA KTR2                                                     /LSQ 254
1052  3157         DCA TYIND            /SET TYPE INDICATOR TO ZERO             /LSQ 255
1053  1160  LS3,   TAD TYPEW            /SHIFT AND TEST TYPE WORD               /LSQ 256
1054  7110         CLL RAR                                                      /LSQ 257
1055  3160         DCA TYPEW                                                    /LSQ 258
1056  7430         SZL                                                          /LSQ 259
1057  5760         JMP I LGLS1                                                  /LSQ 260
1060  2157         ISZ TYIND            /INCREMENT TYPE INDICATOR               /LSQ 261
1061  2367         ISZ KTR2             /TEST COUNTER                           /LSQ 262
1062  5253         JMP LS3                                                      /LSQ 263
1063  1361         TAD CADV1            /ADVANCE TO NEXT REFLECTION             /LSQ 264
1064  1227         TAD ADRO                                                     /LSQ 265
1065  3227         DCA ADRO                                                     /LSQ 266
1066  2366         ISZ KTR1             /TEST COUNTER                           /LSQ 267
1067  5225         JMP LS2                                                      /LSQ 268
1070  4476         JMS I LCRLF          /PRINT SIG                              /LSQ 269
1071  4427         JMS I LFOP                                                   /LSQ 270
1072  7777         -1                                                           /LSQ 271
1073  1170         SIG                                                          /LSQ 272
1074  1062         TAD NO               /COMPUTE SQSIG                          /LSQ 273
1075  1035         TAD MNSNV                                                    /LSQ 274
1076  4471         JMS I LFLT                                                   /LSQ 275
1077  4407         JMS I LFPT                                                   /LSQ 276
1100  6131         FPUT SQSIG                                                   /LSQ 277
1101  5370         FGET SIG                                                     /LSQ 278
1102  4131         FDIV SQSIG                                                   /LSQ 279
1103     2         FSQT                                                         /LSQ 280
1104  6131         FPUT SQSIG                                                   /LSQ 281
1105     0         FEXT                                                         /LSQ 282
1106  4436         JMS I LFOT           /PRINT SQSIG                            /LSQ 283
1107  4476         JMS I LCRLF                                                  /LSQ 284
1110  1373         TAD NVI              /TEST NVI                               /LSQ 285
1111  7650         SNA CLA                                                      /LSQ 286
1112  5466         JMP I LOMGA          /NVI#0                                  /LSQ 287
1113  1004         TAD NV               /LOOP TO TEST MATRIX FOR ZERO DIAGONAL ELEM/LSQ 288
1114  1004         TAD NV               /SET UP FOR ADVANCING ADDRESS           /LSQ 289
```

```
1115  1004          TAD NV                                                    /LSQ 290
1116  3160          DCA CADV2                                                 /LSQ 291
1117  3161          DCA II                  /II#0                             /LSQ 292
1120  1035          TAD MNSNV               /IID#-NV                          /LSQ 293
1121  3162          DCA IID                                                   /LSQ 294
1122  1063          TAD LAI                 /SET ADDRESS TO TEST HIGH ORDER OF MANTISSA/LSQ 295
1123  7001          IAC                                                       /LSQ 296
1124  3163          DCA DIAG                                                  /LSQ 297
1125  2161  LS4,    ISZ II                                                    /LSQ 298
1126  1563          TAD I DIAG              /TEST DIAGONAL ELEMENT            /LSQ 299
1127  7640          SZA CLA                                                   /LSQ 300
1130  5334          JMP LS5                 /IF ZERO, PRINT NUMBER OF THAT ELEMENT,  /LSQ 301
1131  1161          TAD II                                                    /LSQ 302
1132  4464          JMS I LIOUT                                               /LSQ 303
1133  5466          JMP I LOMGA             /GO TO WAITING LOOP               /LSQ 304
1134  1163  LS5,    TAD DIAG                                                  /LSQ 305
1135  1160          TAD CADV2                                                 /LSQ 306
1136  3163          DCA DIAG                                                  /LSQ 307
1137  1160          TAD CADV2               /CADV2#CADV2-3                    /LSQ 308
1140  1156          TAD MTHR                                                  /LSQ 309
1141  3160          DCA CADV2                                                 /LSQ 310
1142  2162          ISZ IID                                                   /LSQ 311
1143  5325          JMP LS4                                                   /LSQ 312
1144  4762  LS6,    JMS I LSMI              /INVERT MATRIX                    /LSQ 313
1145  3005          AI                                                        /LSQ 314
1146     0  ORD,    0                                                         /LSQ 315
1147  7410          SKP                     /ERROR RETURN, PRINT ERROR INDICATOR S  /LSQ 316
1150  5763          JMP I LCHNG             /NORMAL RETURN, JUMP TO COMPUTE PARAMETER C/LSQ 317
1151  1364          TAD SI                                                    /LSQ 318
1152  4470          JMS I LOPCH                                               /LSQ 319
1153  5466          JMP I LOMGA                                               /LSQ 320
1154     0  NR,     0                                                         /LSQ 321
1155  3410  AOBS,   OBS                                                       /LSQ 322
1156  2752  LFH,    FH                                                        /LSQ 323
1157  7773  MIN5,   -5                                                        /LSQ 324
1160  1400  LGLSI,  GLSI                                                      /LSQ 325
1161    20  CADVI,  20                                                        /LSQ 326
1162   364  LSMI,   SMI                                                       /LSQ 327
1163  1600  LCHNG,  CHNG                                                      /LSQ 328
1164   323  SI,     323                                                       /LSQ 329
1165  7536  NLOC,   -242                                                      /LSQ 330
1166     0  KTR1,   0                                                         /LSQ 331
1167     0  KTR2,TEM2,0                                                       /LSQ 332
1170     0  SIG,    0                                                         /LSQ 333
1171     0          0                                                         /LSQ 334
1172     0          0                                                         /LSQ 335
1173     0  NVI,    0                                                         /LSQ 336
                                                                              /LSQ 337
             *1200                                                            /LSQ 338
1200     0  BUFF,  0                     /CHARACTER BUFFER                   /LSQ 339
1201     0         0                     /(MUST BEGIN AT ADDRESS             /LSQ 340
1202     0         0                     /WHICH IS MULTIPLE OF               /LSQ 341
1203     0         0                     /40(8))                             /LSQ 342
1204     0         0                                                         /LSQ 343
1205     0         0                                                         /LSQ 344
1206     0         0                                                         /LSQ 345
1207     0         0                                                         /LSQ 346
1210     0         0                                                         /LSQ 347
1211     0         0                                                         /LSQ 348
1212     0         0                                                         /LSQ 349
1213     0         0                                                         /LSQ 350
1214     0         0                                                         /LSQ 351
1215     0         0                                                         /LSQ 352
1216     0         0                                                         /LSQ 353
1217     0         0                                                         /LSQ 354
1220  6042  TELE, TCF                     /TURN OFF PUNCH FLAG                /LSQ 355
1221  1326         TAD          N         /TEST N                             /LSQ 356
1222  7640         SZA    CLA                                                 /LSQ 357
1223  5226         JMP          P                                             /LSQ 358
1224  7001         IAC                    /RDY#1                              /LSQ 359
1225  5254         JMP          EXIT                                          /LSQ 360
1226  1000  P,     TAD          0         /VARIABLE ADDRESS                   /LSQ 361
1227  3256         DCA          TPCH2     /SAVE CHARACTER                     /LSQ 362
1230  1256         TAD          TPCH2                                         /LSQ 363
1231  7100         CLL                    /CHECK PARITY                       /LSQ 364
1232  7430  PARTY,SZL                                                         /LSQ 365
1233  7040         CMA                                                       /LSQ 366
1234  7010         RAR                                                       /LSQ 367
1235  7510         SPA                                                       /LSQ 368
1236  7040         CMA                                                       /LSQ 369
1237  7440         SZA                                                       /LSQ 370
```

```
1240  5232          JMP          PARTY                                          /LSQ 371
1241  1256          TAD          TPCH2                                          /LSQ 372
1242  7420          SNL                 /LINK#1 FOR ODD PARITY, LINK#0 FOR EVEN PARITY. /LSQ 373
1243   257          AND          PARK                                           /LSQ 374
1244  6046          TLS                 /PUNCH CHARACTER                       /LSQ 375
1245  7240          CLA    CMA          /N#N-1                                 /LSQ 376
1246  1326          TAD          N                                              /LSQ 377
1247  3326          DCA          N                                              /LSQ 378
1250  1226          TAD          P      /P#MODF(P+1,16)                        /LSQ 379
1251  7001          IAC                                                         /LSQ 380
1252   321          AND          MASK                                           /LSQ 381
1253  3226          DCA          P                                              /LSQ 382
1254  3327  EXIT,   DCA          RDY    /RDY#1 OR 0                            /LSQ 383
1255  5465          JMP    I     LTSIN  /TERMINATE INTERRUPT                   /LSQ 384
1256     0  TPCH2,  0                                                          /LSQ 385
1257   177  PARK,   0177                                                       /LSQ 386
                                                                               /LSQ 387
             /STORE A CHARACTER FOR OUTPUT                                     /LSQ 388
1260     0  OPCH,   0                   /SUBROUTINE ENTRY                     /LSQ 389
1261  3330          DCA          TOPCH  /SAVE CHARACTER                       /LSQ 390
1262  1326  WTOP,   TAD          N      /TEST FOR BUFFER FULL                 /LSQ 391
1263  1322          TAD          MSXN                                          /LSQ 392
1264  7650          SNA    CLA                                                 /LSQ 393
1265  5262          JMP          WTOP                                          /LSQ 394
1266  6002          IOF                 /INHIBIT INTERRUPTS                   /LSQ 395
1267  1330          TAD          TOPCH  /STORE CHARACTER                      /LSQ 396
1270  3000  S,      DCA          0      /VARIABLE ADDRESS                     /LSQ 397
1271  2326          ISZ          N      /N#N+1                                /LSQ 398
1272  1270          TAD          S      /S#MODF(S+1,16)                       /LSQ 399
1273  7001          IAC                                                         /LSQ 400
1274   321          AND          MASK                                          /LSQ 401
1275  3270          DCA          S                                             /LSQ 402
1276  1327          TAD          RDY    /TEST RDY                             /LSQ 403
1277  7650          SNA    CLA                                                 /LSQ 404
1300  5305          JMP          RETN                                          /LSQ 405
1301  3725          DCA    I     LSAC   /SIMULATE INTERRUPT                   /LSQ 406
1302  1260          TAD          OPCH   /SET RETURN ADDRESS                   /LSQ 407
1303  3001          DCA       Z  1                                             /LSQ 408
1304  5226          JMP          P                                             /LSQ 409
1305  6001  RETN,   ION                 /RETURN                               /LSQ 410
1306  5660          JMP    I     OPCH                                          /LSQ 411
                                                                               /LSQ 412
             /INITIALIZE TELEPRINTER/PUNCH ROUTINE                             /LSQ 413
1307     0  INIP,   0                   /SUBROUTINE ENTRY                     /LSQ 414
1310  6042          TCF                 /TURN OFF PUNCH FLAG                  /LSQ 415
1311  7001          IAC                 /RDY#1                                /LSQ 416
1312  3327          DCA          RDY                                           /LSQ 417
1313  3326          DCA          N      /N#0                                  /LSQ 418
1314  1323          TAD          CP     /INITIALIZE P                         /LSQ 419
1315  3226          DCA          P                                             /LSQ 420
1316  1324          TAD          CS     /INITIALIZE S                         /LSQ 421
1317  3270          DCA          S                                             /LSQ 422
1320  5707          JMP    I     INIP   /RETURN                               /LSQ 423
1321  7757  MASK,   7757                /MASK                                 /LSQ 424
1322  7760  MSXN,   0-20                /-16                                  /LSQ 425
1323  1200  CP,     TAD          BUFF   /INITIAL P                            /LSQ 426
1324  3200  CS,     DCA          BUFF   /INITIAL S                            /LSQ 427
1325   232  LSAC,   SVAC                                                      /LSQ 428
1326     0  N,      0                   /NUMBER CHAR WAITING                  /LSQ 429
1327     0  RDY,    0                   /PUNCH READY INDICATOR                /LSQ 430
1330     0  TOPCH,  0                   /TEMPORARY                            /LSQ 431
                                                                               /LSQ 432
             /PARAMETER INCREMENTS                /                            /LSQ 433
1331  7767  DP1,    7767                /.001                                 /LSQ 434
1332  2030          2030                                                      /LSQ 435
1333  4466          4466                                                      /LSQ 436
1334  7771  DP2,    7771                /.005                                 /LSQ 437
1335  2436          2436                                                      /LSQ 438
1336  5604          5604                                                      /LSQ 439
1337  7771  DP3,    7771                /.005                                 /LSQ 440
1340  2436          2436                                                      /LSQ 441
1341  5604          5604                                                      /LSQ 442
1342  7771  DP4,    7771                /.005                                 /LSQ 443
1343  2436          2436                                                      /LSQ 444
1344  5604          5604                                                      /LSQ 445
1345  7764  DP5,    7764                /.0002                                /LSQ 446
1346  3215          3215                                                      /LSQ 447
1347  5610          5610                                                      /LSQ 448
1350  7764  DP6,    7764                /.0002                                /LSQ 449
1351  3215          3215                                                      /LSQ 450
1352  5610          5610                                                      /LSQ 451
```

```
1353  7764  DP7,     7764                  /.0002                                    /LSQ 452
1354  3215            3215                                                            /LSQ 453
1355  5610            5610                                                            /LSQ 454
1356  7774  DP8,     7774                  /.05                                      /LSQ 455
1357  3146            3146                                                            /LSQ 456
1360  3146            3146                                                            /LSQ 457
1361  7774  DP9,     7774                  /.05                                      /LSQ 458
1362  3146            3146                                                            /LSQ 459
1363  3146            3146                                                            /LSQ 460
1364  7774  DP10,    7774                  /.05                                      /LSQ 461
1365  3146            3146                                                            /LSQ 462
1366  3146            3146                                                            /LSQ 463
1367  7774  DP11,    7774                  /.05                                      /LSQ 464
1370  3146            3146                                                            /LSQ 465
1371  3146            3146                                                            /LSQ 466
1372  7774  DP12,    7774                  /.05                                      /LSQ 467
1373  3146            3146                                                            /LSQ 468
1374  3146            3146                                                            /LSQ 469
1375  7774  DP13,    7774                  /.05                                      /LSQ 470
1376  3146            3146                                                            /LSQ 471
1377  3146            3146                                                            /LSQ 472
                                                                                      /LSQ 473
            *1400                                                                     /LSQ 474
            /CONTINUATION OF /LS OR /YC                                               /LSQ 475
1400  2062  GLS1,    ISZ NO                /INCREMENT NUMBER OF OBSERVATIONS         /LSQ 476
1401  4754            JMS I LCALC           /OBTAIN CALCULATED VALUE                  /LSQ 477
1402  1560            YC                                                              /LSQ 478
1403  4407            JMS I LFPT            /WDY#YO-YC                                /LSQ 479
1404  5355            FGET YO                                                         /LSQ 480
1405  2360            FSUB YC                                                         /LSQ 481
1406  6363            FPUT WDY                                                        /LSQ 482
1407  3363            FMPY WDY                                                        /LSQ 483
1410  1771            FADD I LSIG           /SIG#SIG+WDY**2                           /LSQ 484
1411  6771            FPUT I LSIG                                                     /LSQ 485
1412     0            FEXT                                                            /LSQ 486
1413  4476            JMS I LCRLF           /PRINT THE OBSERVED AND CALCULATED VALUES A/LSQ 487
1414  4427            JMS I LFOP            /DIFFERENCE, THE NUMBER OF THIS OBSERVATION/LSQ 488
1415  7775            -3                    /INDICATOR, INDICES, AND ANGLES FOR THIS  /LSQ 489
1416  1555            YO                    /OBSERVATION.                             /LSQ 490
1417  1062            TAD NO                                                          /LSQ 491
1420  4464            JMS I LIOUT                                                     /LSQ 492
1421  1157            TAD TYIND                                                       /LSQ 493
1422  4464            JMS I LIOUT                                                     /LSQ 494
1423  1161            TAD H                                                           /LSQ 495
1424  4464            JMS I LIOUT                                                     /LSQ 496
1425  1162            TAD K                                                           /LSQ 497
1426  4464            JMS I LIOUT                                                     /LSQ 498
1427  1163            TAD L                                                           /LSQ 499
1430  4464            JMS I LIOUT                                                     /LSQ 500
1431  4776            JMS I LPSP            /PRINT CR, LF AND SPACES                  /LSQ 501
1432  4427            JMS I LFOP                                                      /LSQ 502
1433  7774            -4                                                              /LSQ 503
1434   164            TTH                                                             /LSQ 504
1435  1777            TAD I LNVI            /TEST NVI                                 /LSQ 505
1436  7650            SNA CLA                                                         /LSQ 506
1437  5766            JMP I LLS3            /IF NVI#0, RETURN FOR NEXT OBSERVATION.   /LSQ 507
1440  1036            TAD LKI               /LOOP TO COMPUTE DERIVATIVES              /LSQ 508
1441  3332            DCA ILKI              /SET UP ADDRESSES                         /LSQ 509
1442  1037            TAD LP                                                          /LSQ 510
1443  3302            DCA ILP                                                         /LSQ 511
1444  1367            TAD LDP                                                         /LSQ 512
1445  3304            DCA ILDP                                                        /LSQ 513
1446  1370            TAD LDV                                                         /LSQ 514
1447  3277            DCA ILDV                                                        /LSQ 515
1450  1075            TAD NP                /SET COUNTER                              /LSQ 516
1451  7041            CIA                                                             /LSQ 517
1452  3334            DCA KNP                                                         /LSQ 518
1453  1732  DERIV1,   TAD I ILKI            /TEST KEY INTEGER                         /LSQ 519
1454  7650            SNA CLA                                                         /LSQ 520
1455  5300            JMP DERIV2                                                      /LSQ 521
1456  4407            JMS I LFPT            /IF NOT ZERO, CALCULATE DERIVATIVE.       /LSQ 522
1457  5702            FGET I ILP                                                      /LSQ 523
1460  6372            FPUT PSAVE                                                      /LSQ 524
1461  1704            FADD I ILDP                                                     /LSQ 525
1462  6702            FPUT I ILP                                                      /LSQ 526
1463     0            FEXT                                                            /LSQ 527
1464  4754            JMS I LCALC                                                     /LSQ 528
1465   126            YD                                                              /LSQ 529
1466  4407            JMS I LFPT                                                      /LSQ 530
1467  5126            FGET YD                                                         /LSQ 531
1470  2360            FSUB YC                                                         /LSQ 532
```

```
1471  4704          FDIV I ILDP                                                  /LSQ 533
1472  6677          FPUT I ILDV                                                  /LSQ 534
1473  5372          FGET PSAVE                                                   /LSQ 535
1474  6702          FPUT I ILP                                                   /LSQ 536
1475     0          FEXT                                                         /LSQ 537
1476  4474          JMS I LADV3          /ADVANCE ADDRESSES                      /LSQ 538
1477     0  ILDV,   0                                                            /LSQ 539
1500  2332  DERIV2, ISZ ILKI                                                     /LSQ 540
1501  4474          JMS I LADV3                                                  /LSQ 541
1502     0  ILP,KNV1,0                                                           /LSQ 542
1503  4474          JMS I LADV3                                                  /LSQ 543
1504     0  ILDP,KNV2,0                                                          /LSQ 544
1505  2334          ISZ KNP              /TEST COUNTER                           /LSQ 545
1506  5253          JMP DERIVI                                                   /LSQ 546
1507  1375          TAD AVEC             /LOOP TO SET UP MATRIX AND VECTOR.      /LSQ 547
1510  3346          DCA ILVEC            /SET UP ADDRESSES.                      /LSQ 548
1511  1063          TAD LAI                                                      /LSQ 549
1512  3332          DCA ILA                                                      /LSQ 550
1513  1370          TAD LDV                                                      /LSQ 551
1514  3350          DCA ILDVI                                                    /LSQ 552
1515  1035          TAD MNSNV            /SET  OUTER LOOP COUNTER                /LSQ 553
1516  3302          DCA KNVI                                                     /LSQ 554
1517  1350  MTRXI,  TAD ILDVI            /SET ADDRESS AND COUNTER FOR INNER LOOP /LSQ 555
1520  3334          DCA ILDV2                                                    /LSQ 556
1521  1302          TAD KNVI                                                     /LSQ 557
1522  3304          DCA KNV2                                                     /LSQ 558
1523  4407  MTRX2,  JMS I LFPT           /STORE MATRIX                           /LSQ 559
1524  5750          FGET I ILDVI                                                 /LSQ 560
1525  3734          FMPY I ILDV2                                                 /LSQ 561
1526  1732          FADD I ILA                                                   /LSQ 562
1527  6732          FPUT I ILA                                                   /LSQ 563
1530     0          FEXT                                                         /LSQ 564
1531  4474          JMS I LADV3          /ADVANCE ADDRESSES                      /LSQ 565
1532     0  ILA,ILKI,0                                                           /LSQ 566
1533  4474          JMS I LADV3                                                  /LSQ 567
1534     0  ILDV2,KNP,0                                                          /LSQ 568
1535  2304          ISZ KNV2             /TEST INNER LOOP COUNTER                /LSQ 569
1536  5323          JMP MTRX2                                                    /LSQ 570
1537  4407          JMS I LFPT           /STORE VECTOR                           /LSQ 571
1540  5750          FGET I ILDVI                                                 /LSQ 572
1541  3363          FMPY WDY                                                     /LSQ 573
1542  1746          FADD I ILVEC                                                 /LSQ 574
1543  6746          FPUT I ILVEC                                                 /LSQ 575
1544     0          FEXT                                                         /LSQ 576
1545  4474          JMS I LADV3          /ADVANCE ADDRESSES                      /LSQ 577
1546     0  ILVEC,  0                                                            /LSQ 578
1547  4474          JMS I LADV3                                                  /LSQ 579
1550     0  ILDVI,  0                                                            /LSQ 580
1551  2302          ISZ KNVI             /TEST OUTER LOOP COUNTER.               /LSQ 581
1552  5317          JMP MTRXI                                                    /LSQ 582
1553  5766          JMP I LLS3           /RETURN FOR NEXT OBSERVATION            /LSQ 583
1554  2242  LCALC,  CALC                                                         /LSQ 584
1555     0  YO,     0                                                            /LSQ 585
1556     0          0                                                            /LSQ 586
1557     0          0                                                            /LSQ 587
1560     0  YC,     0                                                            /LSQ 588
1561     0          0                                                            /LSQ 589
1562     0          0                                                            /LSQ 590
1563     0  WDY,    0                                                            /LSQ 591
1564     0          0                                                            /LSQ 592
1565     0          0                                                            /LSQ 593
1566  1060  LLS3,   LS3+5                                                        /LSQ 594
1567  1331  LDP,    DPI                                                          /LSQ 595
1570  3355  LDV,    DV                                                           /LSQ 596
1571  1170  LSIG,   SIG                                                          /LSQ 597
1572     0  PSAVE,  0                                                            /LSQ 598
1573     0          0                                                            /LSQ 599
1574     0          0                                                            /LSQ 600
1575  3214  AVEC,   VEC                                                          /LSQ 601
1576  4462  LPSP,   PSP                                                          /LSQ 602
1577  1173  LNVI,   NVI                                                          /LSQ 603
                                                                                 /LSQ 604
            *1600                                                                /LSQ 605
            /CONTINUATION OF /LS                                                 /LSQ 606
1600  1063  CHNG,   TAD LAI              /LOOP TO COMPUTE PARAMETER CHANGES AND SAVE/LSQ 607
1601  3267          DCA TLAI             /     DIAGONAL ELEMENTS                 /LSQ 608
1602  1367          TAD LPD              /SET UP ADDRESSES                       /LSQ 609
1603  3265          DCA TLPD                                                     /LSQ 610
1604  1370          TAD DIAGL                                                    /LSQ 611
1605  3245          DCA TDIA                                                     /LSQ 612
1606  1035          TAD MNSNV            /SET COUNTER                            /LSQ 613
```

```
1607  3161          DCA CNVI                                                  /LSQ 614
1610  1267  CHNG1,  TAD TLA1                                                  /LSQ 615
1611  3365          DCA TLA                                                   /LSQ 616
1612  4407          JMS I LFPT          /DF#0                                 /LSQ 617
1613  5771          FGET I LZERO                                              /LSQ 618
1614  6665          FPUT I TLPD                                               /LSQ 619
1615     0          FEXT                                                      /LSQ 620
1616  7040          CMA                 /IJD#NV-1                             /LSQ 621
1617  1004          TAD NV                                                    /LSQ 622
1620  3160          DCA IJD                                                   /LSQ 623
1621  1035          TAD MNSNV           /SET COUNTER FOR INNER LOOP.          /LSQ 624
1622  3164          DCA CNV2                                                  /LSQ 625
1623  1374          TAD LVEC                                                  /LSQ 626
1624  3261          DCA TLV                                                   /LSQ 627
1625  4407  CHNG2,  JMS I LFPT          /COMPUTE PARAMETER DIFFERENCE.        /LSQ 628
1626  5765          FGET I TLA                                                /LSQ 629
1627  3661          FMPY I TLV                                                /LSQ 630
1630  1665          FADD I TLPD                                               /LSQ 631
1631  6665          FPUT I TLPD                                               /LSQ 632
1632     0          FEXT                                                      /LSQ 633
1633  1161          TAD CNVI            /COMPARE TWO COUNTERS                 /LSQ 634
1634  7041          CIA                                                       /LSQ 635
1635  1164          TAD CNV2                                                  /LSQ 636
1636  7440          SZA                                                       /LSQ 637
1637  5246          JMP CHNG3                                                 /LSQ 638
1640  4407          JMS I LFPT          /IF EQUAL, SAVE DIAGONAL ELEMENT.     /LSQ 639
1641  5765          FGET I TLA                                                /LSQ 640
1642  6645          FPUT I TDIA                                               /LSQ 641
1643     0          FEXT                                                      /LSQ 642
1644  4474          JMS I LADV3         /ADVANCE ADDRESSES.                   /LSQ 643
1645     0  TDIA,   0                                                         /LSQ 644
1646  7700  CHNG3,  SMA CLA                                                   /LSQ 645
1647  5364          JMP CHNG5           /FOR MATRIX ELEMENT A(I,J), J LESS THAN I, /LSQ 646
1650  1160          TAD IJD             /     TO NEXT ELEMENT OF ROW.         /LSQ 647
1651  1160          TAD IJD                                                   /LSQ 648
1652  1160          TAD IJD                                                   /LSQ 649
1653  1365          TAD TLA                                                   /LSQ 650
1654  3365          DCA TLA                                                   /LSQ 651
1655  7040          CMA                                                       /LSQ 652
1656  1160          TAD IJD                                                   /LSQ 653
1657  3160          DCA IJD                                                   /LSQ 654
1660  4474  CHNG4,  JMS I LADV3                                               /LSQ 655
1661     0  TLV,    0                                                         /LSQ 656
1662  2164          ISZ CNV2            /TEST INNER LOOP COUNTER.             /LSQ 657
1663  5225          JMP CHNG2                                                 /LSQ 658
1664  4474          JMS I LADV3         /IF ZERO, COMPUTE NEXT PARAMETER CHANGE. /LSQ 659
1665     0  TLPD,   0                                                         /LSQ 660
1666  4474          JMS I LADV3                                               /LSQ 661
1667     0  TLA1,   0                                                         /LSQ 662
1670  2161          ISZ CNVI            /TEST COUNTER FOR OUTER LOOP.         /LSQ 663
1671  5210          JMP CHNGI                                                 /LSQ 664
1672  1037          TAD LP              /LOOP TO COMPUTE AND PUT OUT NEW PARAMETERS/LSQ 665
1673  3310          DCA TLP             /     STANDARD ERRORS                 /LSQ 666
1674  1370          TAD DIAGL           /SET UP ADDRESSES.                    /LSQ 667
1675  3341          DCA LDIAG                                                 /LSQ 668
1676  1036          TAD LKI                                                   /LSQ 669
1677  3165          DCA TLKI                                                  /LSQ 670
1700  1367          TAD LPD                                                   /LSQ 671
1701  3316          DCA LLPD                                                  /LSQ 672
1702  1075          TAD NP              /SET COUNTER                          /LSQ 673
1703  7041          CIA                                                       /LSQ 674
1704  3167          DCA CNP                                                   /LSQ 675
1705  4476  CPAR,   JMS I LCRLF         /PRINT CR,LF                          /LSQ 676
1706  4427          JMS I LFOP          /PRINT OLD PARAMETER.                 /LSQ 677
1707  7777          -1                                                        /LSQ 678
1710     0  TLP,    0                                                         /LSQ 679
1711  1565          TAD I TLKI          /TEST KEY INTEGER.                    /LSQ 680
1712  7650          SNA CLA                                                   /LSQ 681
1713  5351          JMP CPAR2           /IF ZERO, JUMP,                       /LSQ 682
1714  4427          JMS I LFOP          /IF NOT ZERO, PRINT PARAMETER CHANGE. /LSQ 683
1715  7777          -1                                                        /LSQ 684
1716     0  LLPD,   0                                                         /LSQ 685
1717  4407          JMS I LFPT          /COMPUTE NEW PARAMETER.               /LSQ 686
1720  5710          FGET I TLP                                                /LSQ 687
1721  1716          FADD I LLPD                                               /LSQ 688
1722  6710          FPUT I TLP                                                /LSQ 689
1723     0          FEXT                                                      /LSQ 690
1724  4406          JMS I LFOT          /PRINT NEW PARAMETER.                 /LSQ 691
1725  4407          JMS I LFPT          /COMPUTE STANDARD ERROR.              /LSQ 692
1726  5741          FGET I LDIAG                                              /LSQ 693
1727     2          FSQT                                                      /LSQ 694
```

```
1730  3131          FMPY SQSIG                                                  /LSQ 695
1731     0          FEXT                                                        /LSQ 696
1732  4775          JMS I LVFOT          /PRINT STANDARD ERROR.                 /LSQ 697
1733     2          2                                                           /LSQ 698
1734     5          5                                                           /LSQ 699
1735  1316          TAD LLPD             /ADVANCE TO NEXT PARAMETER             /LSQ 700
1736  1154          TAD THR                                                     /LSQ 701
1737  3316          DCA LLPD                                                    /LSQ 702
1740  4474          JMS I LADV3                                                 /LSQ 703
1741     0  LDIAG,  0                                                           /LSQ 704
1742  1310  CPAR1,  TAD TLP                                                     /LSQ 705
1743  1154          TAD THR                                                     /LSQ 706
1744  3310          DCA TLP                                                     /LSQ 707
1745  2165          ISZ TLKI                                                    /LSQ 708
1746  2167          ISZ CNP              /TEST COUNTER.                         /LSQ 709
1747  5305          JMP CPAR                                                    /LSQ 710
1750  5466          JMP I LOMGA          /IF ZERO, GO TO WAITING LOOP.          /LSQ 711
1751  1372  CPAR2,  TAD NSP              /IF KEY INTEGER ZERO, PRINT SPACES INSTEAD /LSQ 712
1752  3170          DCA KNSP             /     PARAMETER CHANGE.                /LSQ 713
1753  1373          TAD SPACE                                                   /LSQ 714
1754  4470          JMS I LOPCH                                                 /LSQ 715
1755  2170          ISZ KNSP                                                    /LSQ 716
1756  5353          JMP .-3                                                     /LSQ 717
1757  4407          JMS I LFPT           /PRINT PARAMETER                       /LSQ 718
1760  5710          FGET I TLP                                                  /LSQ 719
1761     0          FEXT                                                        /LSQ 720
1762  4406          JMS I LFOT                                                  /LSQ 721
1763  5342          JMP CPAR1            /JUMP TO ADVANCE TO NEXT PARAMETER.    /LSQ 722
1764  4474  CHNG5,  JMS I LADV3          /FOR ELEMENT A(I,J) OF MATRIX, FOR J GREATE/LSQ 723
1765     0  TLA,    0                    /     OR EQUAL TO I, ADVANCE TO NEXT ELEMEN/LSQ 724
1766  5260          JMP CHNG4                                                   /LSQ 725
1767  3355  LPD,    PD                                                          /LSQ 726
1770  2752  DIAGL,  DIA                                                         /LSQ 727
1771  5107  LZERO,  ZERO                                                        /LSQ 728
1772  7767  NSP,    -11                                                         /LSQ 729
1773   240  SPACE,  240                                                         /LSQ 730
1774  3214  LVEC,   VEC                                                         /LSQ 731
1775  7200  LVFOT,  VFOUT                                                       /LSQ 732
                                                                                /LSQ 733
            *2000                                                               /LSQ 734
            /KEYBOARD/READER INTERRUPT ROUTINE.                                 /LSQ 735
2000  6036  KEYB,   KRB                  /READ CHARACTER, CLEAR KEYBOARD FLAG.  /LSQ 736
2001  1301          TAD MSNT             /IS IT A SENTINEL.                     /LSQ 737
2002  7650          SNA CLA                                                     /LSQ 738
2003  5220          JMP SENT             /YES.                                  /LSQ 739
2004  1304          TAD SGTK             /NO. TEST FOR SIGNAL EXPECTED.         /LSQ 740
2005  7640          SZA CLA                                                     /LSQ 741
2006  5225          JMP SGNL             /EXPECTED.                             /LSQ 742
2007  1305          TAD KYEX             /TEST FOR CHARACTER EXPECTED.          /LSQ 743
2010  7650          SNA CLA                                                     /LSQ 744
2011  5465          JMP I LTSIN          /NOT EXPECTED. IGNORE.                 /LSQ 745
2012  3305          DCA KYEX             /CLEAR CHARACTER EXPECTED INDICATOR.   /LSQ 746
2013  6036          KRB                  /READ CHARACTER.                       /LSQ 747
2014   317          AND KYMSK            /SET BIT 4.                            /LSQ 748
2015  1320          TAD KYCNS                                                   /LSQ 749
2016  6001          ION                  /CAUSE MAIN PROGRAM JUMP.              /LSQ 750
2017  5721          JMP I IPCH                                                  /LSQ 751
2020  1302  SENT,   TAD MSGT             /SET SIGNAL TIME LIMITER.              /LSQ 752
2021  3304          DCA SGTK                                                    /LSQ 753
2022  1155          TAD MTWO             /SET CHARACTER COUNTER.                /LSQ 754
2023  3306          DCA SCHK                                                    /LSQ 755
2024  5465          JMP I LTSIN          /TERMINATE INTERRUPT.                  /LSQ 756
2025  6036  SGNL,   KRB                  /READ CHARACTER.                       /LSQ 757
2026   307          AND SMASK            /MASK OFF FIRST 6 BITS TO OBTAIN 6-BIT TRIM/LSQ 758
2027  2306          ISZ SCHK             /IS IT FIRST OR SECOND CHARACTER.      /LSQ 759
2030  5274          JMP FRST             /FIRST CHARACTER.                      /LSQ 760
2031  1310          TAD COMM             /SECOND CHARACTER, ADD FIRST.          /LSQ 761
2032  3310          DCA COMM                                                    /LSQ 762
2033  3304          DCA SGTK             /CLEAR SIGNAL EXPECTED INDICATOR.      /LSQ 763
2034  1316          TAD NLIST            /SET COUNTER TO SEARCH LIST.           /LSQ 764
2035  3311          DCA KLIST                                                   /LSQ 765
2036  1315          TAD NINT             /SET COUNTER TO INDICATE INTERRUPT OR MAIN /LSQ 766
2037  3312          DCA KIND                                                    /LSQ 767
2040  1303          TAD LOCSGL           /SET ADDRESS FOR AUTO-INDEXING.        /LSQ 768
2041  3017          DCA TSGNL                                                   /LSQ 769
2042  1417  SGNL1,  TAD I TSGNL          /PICK UP COMMAND FROM TABLE AND COMPARE WIT/LSQ 770
2043  7041          CIA                  /COMMAND READ IN.                      /LSQ 771
2044  1310          TAD COMM                                                    /LSQ 772
2045  7650          SNA CLA                                                     /LSQ 773
2046  5255          JMP SGNL2            /COMMANDS ARE THE SAME.                /LSQ 774
2047  2017          ISZ TSGNL            /COMMANDS ARE NOT THE SAME. ADVANCE ADDRESS/LSQ 775
```

```
2050  2312          ISZ KIND            /ADVANCE COUNTERS.                          /LSQ 776
2051  7000          NOP                                                             /LSQ 777
2052  2311          ISZ KLIST                                                       /LSQ 778
2053  5242          JMP SGNL1                                                       /LSQ 779
2054  5465          JMP I LTSIN         /COMMAND NOT IN TABLE. TERMINATE INTERRUPT./LSQ 780
2055  1417  SGNL2,  TAD  I TSGNL        /PICK UP ADDRESS FOR JUMP.                  /LSQ 781
2056  3311          DCA JADR                                                        /LSQ 782
2057  1312          TAD KIND            /MAIN PROGRAM OR INTERRUPT.                 /LSQ 783
2060  7710          SPA CLA                                                         /LSQ 784
2061  5711          JMP I JADR          /INTERRUPT                                  /LSQ 785
2062  7000          NOP                                                             /LSQ 786
2063  3305          DCA KYEX            /CLEAR CHARACTER EXPECTED INDICATOR.        /LSQ 787
2064  6001          ION                 /ENABLE INTERRUPTS.                         /LSQ 788
2065  4476          JMS I LCRLF         /PRINT SIGNAL.                              /LSQ 789
2066  1313          TAD SLASH                                                       /LSQ 790
2067  4470          JMS I LOPCH                                                     /LSQ 791
2070  1310          TAD COMM                                                        /LSQ 792
2071  4714          JMS I LTY2                                                      /LSQ 793
2072  4476          JMS I LCRLF                                                     /LSQ 794
2073  5711          JMP I JADR          /JUMP.                                      /LSQ 795
2074  7106  FRST,   CLL RTL             /FIRST CHARACTER. ROTATE 6-BIT TRIMMED CODE/LSQ 796
2075  7006          RTL                 /FIRST 6 BITS AND SAVE RESULT.              /LSQ 797
2076  7006          RTL                                                             /LSQ 798
2077  3310          DCA COMM                                                        /LSQ 799
2100  5465          JMP I LTSIN         /TERMINATE INTERRUPT.                       /LSQ 800
2101  7521  MSNT,   -257                /MINUS SENTINEL SLASH.                      /LSQ 801
2102  7634  MSGT,   -144                /CONSTANT FOR TIME LIMIT.                   /LSQ 802
2103  2142  LOCSGL, SGLTAB-1            /ADDRESS FOR USE OF AUTO-INDEXING           /LSQ 803
2104     0  SGTK,   0                                                               /LSQ 804
2105     0  KYEX,   0                                                               /LSQ 805
2106     0  SCHK,   0                                                               /LSQ 806
2107    77  SMASK,  0077                                                            /LSQ 807
2110     0  COMM,   0                                                               /LSQ 808
2111     0  KLIST, JADR, 0                                                          /LSQ 809
2112     0  KIND,   0                                                               /LSQ 810
2113   257  SLASH,  257                                                             /LSQ 811
2114  7544  LTY2,   7544                                                            /LSQ 812
2115  7777  NINT,   -1                                                              /LSQ 813
2116  7765  NLIST,  -13                                                             /LSQ 814
2117  7577  KYMSK,  7577                                                            /LSQ 815
2120   200  KYCNS,  0200                                                            /LSQ 816
                                                                                    /LSQ 817
2121     0  IPCH, 0                   /SUBROUTINE ENTRY                            /LSQ 818
2122  7001        IAC                 /KYEX#1                                      /LSQ 819
2123  3305        DCA         KYEX                                                 /LSQ 820
2124  6004        6004                /START READER                                /LSQ 821
2125  1326        TAD         .+1     /DISPLAY 7000 IN AC                          /LSQ 822
2126  7000        NOP                 /WAITING LOOP                                /LSQ 823
2127  5326        JMP         .-1                                                  /LSQ 824
                                                                                    /LSQ 825
            /INITIALIZE KEYBOARD/READER ROUTINES                                    /LSQ 826
2130     0  INIK, 0                   /SUBROUTINE ENTRY                            /LSQ 827
2131  6032        KCC                 /CLEAR KEYBOARD FLAG                         /LSQ 828
2132  3304        DCA         SGTK    /CLEAR SIGNAL TIMER                          /LSQ 829
2133  3305        DCA         KYEX    /CLEAR CHAR EXPECTED                         /LSQ 830
2134  5730        JMP   I     INIK    /RETURN                                      /LSQ 831
                                                                                    /LSQ 832
            /TIME LIMITER ROUTINE FOR KEYBOARD SIGNAL                               /LSQ 833
2135     0  SGTM, 0                   /ENTRY FROM 1/10 SEC CLOCK                   /LSQ 834
2136  1304        TAD         SGTK    /TEST SIGNAL TIMER                           /LSQ 835
2137  7640        SZA   CLA                                                        /LSQ 836
2140  2304        ISZ         SGTK    /ADVANCE SIGNAL TIMER                        /LSQ 837
2141  5735        JMP   I     SGTM    /RETURN                                      /LSQ 838
2142  5735        JMP   I     SGTM    /RETURN                                      /LSQ 839
2143  4040  SGLTAB, 4040                /SPACE-SPACE. KILL CURRENT PROGRAM, REINITI/LSQ 841
2144   200          INWT                                                           /LSQ 842
2145  1706          1706                /OF, STOP CURRENT PROGRAM, RETURN TO WAITIN/LSQ 843
2146   203          OMGA                                                           /LSQ 844
2147  2431          2431                /TY. ALLOW BUT IGNORE TYPING.              /LSQ 845
2150  4457          TYPE                                                           /LSQ 846
2151  1423          1423                /LS. PERFORM LEAST SQUARES CYCLE.          /LSQ 847
2152  1000          ORGLS                                                          /LSQ 848
2153  3103          3103                /YC. COMPUTE YC AND COMPARE WITH YO.       /LSQ 849
2154  1001          CALCY                                                          /LSQ 850
2155  2220          2220                /RP. READ PARAMETERS.                      /LSQ 851
2156  2200          RDPAR                                                          /LSQ 852
2157  2213          2213                /RK. READ KEY INTEGERS.                    /LSQ 853
2160  3710          RDKI                                                           /LSQ 854
2161  2020          2020                /PP. PRINT PARAMETERS AND KEY INTEGERS.    /LSQ 855
2162  3731          PRPAR                                                          /LSQ 856
2163  2217          2217                /RO. READ OBSERVATIONS.                    /LSQ 857
```

```
2164   241          RDOBS                                                    /LSQ 858
2165  2210          2210                /RH. READ INDICES OF ORIENTING REFLECTIONS /LSQ 859
2166  4453          RDH                                                      /LSQ 860
2167   315          0315                /CM. CALCULATE MATRIX                /LSQ 861
2170  2171          CALMTX                                                   /LSQ 862
                                                                             /LSQ 863
            /CM. SET UP MATRIX MB AT 7600 USING LATEST PARAMETERS            /LSQ 864
2171  1151  CALMTX, TAD TWO            /TYPE INDICATOR #2 TO EXIT FROM CALC AS SOO/LSQ 865
2172  3157          DCA TYIND           /POSSIBLE                            /LSQ 866
2173  4776          JMS I ADCALC                                             /LSQ 867
2174   115          Q                   /IGNORE CALCULATED Y, LOCATION IRRELEVANT /LSQ 868
2175  5466          JMP I LOMGA         /RETURN TO WAITING LOOP              /LSQ 869
2176  2242  ADCALC, CALC                                                     /LSQ 870
                                                                             /LSQ 871
            *2200                                                            /LSQ 872
            /RP. READ PARAMETERS FROM TAPE OR KEYBOARD                       /LSQ 873
2200  4426  RDPAR,  JMS I LFNP                                               /LSQ 874
2201  7763          -15                                                      /LSQ 875
2202  3247          P1                                                       /LSQ 876
2203  5466          JMP I LOMGA                                              /LSQ 877
                                                                             /LSQ 878
            /SUBROUTINE TO ADVANCE ADDRESS BY THREE                          /LSQ 879
2204     0  ADV3,   0                                                       /LSQ 880
2205  1604          TAD I ADV3                                               /LSQ 881
2206  1154          TAD THR                                                  /LSQ 882
2207  3604          DCA I ADV3                                               /LSQ 883
2210  2204          ISZ ADV3                                                 /LSQ 884
2211  5604          JMP I ADV3                                               /LSQ 885
                                                                             /LSQ 886
            *2213                                                            /LSQ 887
2213     0  CNSTRN, 0                   /DUMMY CONSTRAIN ROUTINE.            /LSQ 888
2214  5613          JMP I CNSTRN                                             /LSQ 889
                                                                             /LSQ 890
            /SUBROUTINE CALC                                                 /LSQ 891
            *2233                                                            /LSQ 892
2233  4437  LOCA2,  A                                                        /LSQ 893
2234  4442  LOCB2,  B                                                        /LSQ 894
2235  4445  LOCD2,  D                                                        /LSQ 895
2236  2560  LRTN,   RETRN                                                    /LSQ 896
2237  4000  LCALB,  CALBB                                                    /LSQ 897
2240  4200  LCALU,  CALMB                                                    /LSQ 898
2241  2403  LCALC2, CALC2                                                    /LSQ 899
2242     0  CALC,   0                                                       /LSQ 900
2243  4424          JMS I LCOP          /COPY PARAMETER INTO LOCATIONS OF CELL PARA/LSQ 901
2244  7753          -25                                                      /LSQ 902
2245  3247          P1                                                       /LSQ 903
2246  4117  LWVL,   WVL                                                      /LSQ 904
2247  4213          JMS CNSTRN                                               /LSQ 905
2250  4637          JMS I LCALB         /CALCULATE CARTESIAN TRANSFORMATION MATRIX /LSQ 906
2251  4424          JMS I LCOP          /COPY PRINCIPAL ORIENTING REFLECTION /LSQ 907
2252  7767          -11                                                      /LSQ 908
2253  3316          HP                                                       /LSQ 909
2254  4341          H1                                                       /LSQ 910
2255  4424          JMS I LCOP                                               /LSQ 911
2256  7767          -11                                                      /LSQ 912
2257  3274          P1+25                                                    /LSQ 913
2260  4352          OMGM                                                     /LSQ 914
2261  4640          JMS I LCALU         /CALCULATE ORIENTATION MATRIX AND PRODUCT M/LSQ 915
2262  1642          TAD I CALC          /SET UP ADDRESS FOR STORING CALCULATED VALU/LSQ 916
2263  3103          DCA LYCALC                                               /LSQ 917
2264  2242          ISZ CALC            /SET RETURN.                         /LSQ 918
2265  1242          TAD CALC                                                 /LSQ 919
2266  3636          DCA I LRTN                                               /LSQ 920
2267  4425          JMS I LMV           /COMPUTE PLANE NORMAL                /LSQ 921
2270  7600          MB11                                                     /LSQ 922
2271  2752          FH                                                       /LSQ 923
2272   104          HPHI1                                                    /LSQ 924
2273  4407          JMS I LFPT          /Q#SQRT(HPHI(1)**2+HPHI(2)**2+HPHI(3)**2) /LSQ 925
2274  5104          FGET HPHI1                                               /LSQ 926
2275  3104          FMPY HPHI1                                               /LSQ 927
2276  6115          FPUT Q                                                   /LSQ 928
2277  5107          FGET HPHI2                                               /LSQ 929
2300  3107          FMPY HPHI2                                               /LSQ 930
2301  1115          FADD Q                                                   /LSQ 931
2302  6115          FPUT Q                                                   /LSQ 932
2303  5112          FGET HPHI3                                               /LSQ 933
2304  3112          FMPY HPHI3                                               /LSQ 934
2305  1115          FADD Q                                                   /LSQ 935
2306     2          FSQT                                                     /LSQ 936
2307  6115          FPUT Q                                                   /LSQ 937
2310  5646          FGET I LWVL         /SIN(THETA)# WVL/(2*Q)               /LSQ 938
```

```
2311  3115          FMPY Q                                                    /LSQ 939
2312  4151          FDIV TWO                                                  /LSQ 940
2313  6126          FPUT SINT          /COS(THETA)#SQRT(1-SIN(THETA)**2)      /LSQ 941
2314  3126          FMPY SINT                                                 /LSQ 942
2315     6          FNEG                                                      /LSQ 943
2316  1146          FADD ONE                                                  /LSQ 944
2317     2          FSQT                                                      /LSQ 945
2320  6545          FPUT I ADRB        /THETA#ARCTAN(SIN(THETA)/COS(THETA))   /LSQ 946
2321  5126          FGET SINT                                                 /LSQ 947
2322     5          FATN                                                      /LSQ 948
2323     0          FEXT                                                      /LSQ 949
2324  1157          TAD TYIND          /TEST TYPE INDICATOR. IS IT 2-         /LSQ 950
2325  1155          TAD MTWO                                                  /LSQ 951
2326  7640          SZA CLA                                                   /LSQ 952
2327  5337          JMP CALC1          /NO.                                   /LSQ 953
2330  4407          JMS I LFPT         /YES. 2THETA OBSERVATION FOR CENTERING IN C/LSQ 954
2331  3151          FMPY TWO           /CALCULATED VALUE # 2*THETA            /LSQ 955
2332  6503          FPUT I LYCALC                                             /LSQ 956
2333  5164          FGET TTH                                                  /LSQ 957
2334  6477          FPUT I LYO         /OBSERVED VALUE # TTH                  /LSQ 958
2335     0          FEXT                                                      /LSQ 959
2336  5642          JMP I CALC         /RETURN                                /LSQ 960
2337  4407  CALC1,  JMS I LFPT         /UNITP(I)#HPHI(I)/Q                    /LSQ 961
2340  5104          FGET HPHI1                                                /LSQ 962
2341  4115          FDIV Q                                                    /LSQ 963
2342  6104          FPUT UNITP1                                               /LSQ 964
2343  5107          FGET HPHI2                                                /LSQ 965
2344  4115          FDIV Q                                                    /LSQ 966
2345  6107          FPUT UNITP2                                               /LSQ 967
2346  5112          FGET HPHI3                                                /LSQ 968
2347  4115          FDIV Q                                                    /LSQ 969
2350  6112          FPUT UNITP3                                               /LSQ 970
2351     0          FEXT                                                      /LSQ 971
2352  1157          TAD TYIND          /IS TYPE 4-                            /LSQ 972
2353  1143          TAD MIN4                                                  /LSQ 973
2354  7640          SZA CLA                                                   /LSQ 974
2355  5641          JMP I LCALC2       /NO                                    /LSQ 975
2356  4407          JMS I LFPT         /YES. PHI OBSERVATION FOR CENTERING IN COUN/LSQ 976
2357  5175          FGET PHI           /OBSERVED VALUE # PHI                  /LSQ 977
2360  6477          FPUT I LYO                                                /LSQ 978
2361  5172          FGET CHI           /COMPUTE CALCULATED VALUE              /LSQ 979
2362     3          FSIN                                                      /LSQ 980
2363     6          FNEG                                                      /LSQ 981
2364  6115          FPUT SINC                                                 /LSQ 982
2365  3104          FMPY UNITP1                                               /LSQ 983
2366  6633          FPUT I LOCA2                                              /LSQ 984
2367  5115          FGET SINC                                                 /LSQ 985
2370  3107          FMPY UNITP2                                               /LSQ 986
2371  6634          FPUT I LOCB2                                              /LSQ 987
2372  5172          FGET CHI                                                  /LSQ 988
2373     4          FCOS                                                      /LSQ 989
2374  3112          FMPY UNITP3                                               /LSQ 990
2375  6635          FPUT I LOCD2                                              /LSQ 991
2376     0          FEXT                                                      /LSQ 992
2377  4544          JMS I LTREQ                                               /LSQ 993
2400  4764          JMS I LSELCT                                              /LSQ 994
2401  4445  LZ1,    Z1                                                        /LSQ 995
2402  5760          JMP I RETRN        /RETURN                                /LSQ 996
2403  4407  CALC2,  JMS I LFPT         /SET UP MATRIX TO ROTATE PHI DEGREES ABOUT /LSQ 997
2404  5175          FGET PHI                                                  /LSQ 998
2405     4          FCOS                                                      /LSQ 999
2406  6626          FPUT I LRM11                                              /LSQ1000
2407  6771          FPUT I LRM22                                              /LSQ1001
2410  5175          FGET PHI                                                  /LSQ1002
2411     3          FSIN                                                      /LSQ1003
2412  6770          FPUT I LRM12                                              /LSQ1004
2413     6          FNEG                                                      /LSQ1005
2414  6766          FPUT I LRM21                                              /LSQ1006
2415  5146          FGET ONE                                                  /LSQ1007
2416  6775          FPUT I LRM33                                              /LSQ1008
2417  2146          FSUB ONE                                                  /LSQ1009
2420  6767          FPUT I LRM31                                              /LSQ1010
2421  6772          FPUT I LRM32                                              /LSQ1011
2422  6773          FPUT I LRM13                                              /LSQ1012
2423  6774          FPUT I LRM23                                              /LSQ1013
2424     0          FEXT                                                      /LSQ1014
2425  4425          JMS I LMV                                                 /LSQ1015
2426  2717  LRM11,  RM11                                                      /LSQ1016
2427   104          UNITP1                                                    /LSQ1017
2430   115          UNITC1                                                    /LSQ1018
2431  1157          TAD TYIND          /IS TYPE 3-                            /LSQ1019
```

```
2432  1156          TAD MTHR                                                  /LSQ1020
2433  7640          SZA CLA                                                   /LSQ1021
2434  5260          JMP CALC3          /NO                                    /LSQ1022
2435  4407          JMS I LFPT         /YES. CHI OBSERVATION FOR CENTERING IN COUN/LSQ1023
2436  5172          FGET CHI           /OBSERVED VALUE # CHI                  /LSQ1024
2437  6477          FPUT I LYO                                                /LSQ1025
2440  5115          FGET UNITC1        /COMPUTE CALCULATED VALUE.             /LSQ1026
2441  6545          FPUT I ADRB                                               /LSQ1027
2442  5123          FGET UNITC3                                               /LSQ1028
2443     5          FATN                                                      /LSQ1029
2444  6104          FPUT CHI1                                                 /LSQ1030
2445  5115          FGET UNITC1                                               /LSQ1031
2446     6          FNEG                                                      /LSQ1032
2447  6545          FPUT I ADRB                                               /LSQ1033
2450  5123          FGET UNITC3                                               /LSQ1034
2451     6          FNEG                                                      /LSQ1035
2452     5          FATN                                                      /LSQ1036
2453  6107          FPUT CHI2                                                 /LSQ1037
2454     0          FEXT                                                      /LSQ1038
2455  4764          JMS I LSELCT                                              /LSQ1039
2456   104          CHI1                                                      /LSQ1040
2457  5760          JMP I RETRN        /RETURN                                /LSQ1041
2460  4407  CALC3,  JMS I LFPT         /SET UP MATRIX TO ROTATE CHI DEGREES ABOUT /LSQ1042
2461  5172          FGET CHI                                                  /LSQ1043
2462     4          FCOS                                                      /LSQ1044
2463  6626          FPUT I LRM11                                              /LSQ1045
2464  6775          FPUT I LRM33                                              /LSQ1046
2465  5172          FGET CHI                                                  /LSQ1047
2466     3          FSIN                                                      /LSQ1048
2467  6773          FPUT I LRM13                                              /LSQ1049
2470     6          FNEG                                                      /LSQ1050
2471  6767          FPUT I LRM31                                              /LSQ1051
2472  5146          FGET ONE                                                  /LSQ1052
2473  6771          FPUT I LRM22                                              /LSQ1053
2474  2146          FSUB ONE                                                  /LSQ1054
2475  6766          FPUT I LRM21                                              /LSQ1055
2476  6770          FPUT I LRM12                                              /LSQ1056
2477  6772          FPUT I LRM32                                              /LSQ1057
2500  6774          FPUT I LRM23                                              /LSQ1058
2501     0          FEXT                                                      /LSQ1059
2502  4425          JMS I LMV                                                 /LSQ1060
2503  2717          RM11                                                      /LSQ1061
2504   115          UNITC1                                                    /LSQ1062
2505   104          UNITO1                                                    /LSQ1063
2506  4407          JMS I LFPT                                                /LSQ1064
2507  5107          FGET UNITO2                                               /LSQ1065
2510  6761          FPUT I LOCA                                               /LSQ1066
2511  5104          FGET UNITO1                                               /LSQ1067
2512     6          FNEG                                                      /LSQ1068
2513  6762          FPUT I LOCB                                               /LSQ1069
2514  5126          FGET SINT                                                 /LSQ1070
2515  6763          FPUT I LOCD                                               /LSQ1071
2516     0          FEXT                                                      /LSQ1072
2517  4544          JMS I LTREQ                                               /LSQ1073
2520  1157          TAD TYIND          /IS TYPE 1-                            /LSQ1074
2521  7650          SNA CLA                                                   /LSQ1075
2522  5343          JMP CALC4          /NO.                                   /LSQ1076
2523  4407          JMS I LFPT         /YES. OMEGA OBSERVATION OF BRAGG CONDITION /LSQ1077
2524  5167          FGET OMG           /OBSERVED VALUE # OMG                  /LSQ1078
2525  6477          FPUT I LYO                                                /LSQ1079
2526  5164          FGET TTH           /COMPUTE CALCULATED VALUE              /LSQ1080
2527  4151          FDIV TWO                                                  /LSQ1081
2530  6126          FPUT THTA                                                 /LSQ1082
2531  5601          FGET I LZ1                                                /LSQ1083
2532  2126          FSUB THTA                                                 /LSQ1084
2533  6123          FPUT OMG1                                                 /LSQ1085
2534  5765          FGET I LZ2                                                /LSQ1086
2535  2126          FSUB THTA                                                 /LSQ1087
2536  6126          FPUT OMG2                                                 /LSQ1088
2537     0          FEXT                                                      /LSQ1089
2540  4764          JMS I LSELCT                                              /LSQ1090
2541   123          OMG1                                                      /LSQ1091
2542  5760          JMP I RETRN        /RETURN                                /LSQ1092
2543  4407  CALC4,  JMS I LFPT         /TYPE 0. 2THETA OBSERVATION OF BRAGG CONDIT/LSQ1093
2544  5164          FGET TTH           /OBSERVED VALUE # TTH                  /LSQ1094
2545  6477          FPUT I LYO         /COMPUTE CALCULATED VALUE.             /LSQ1095
2546  5601          FGET I LZ1                                                /LSQ1096
2547  3151          FMPY TWO                                                  /LSQ1097
2550  6115          FPUT TWT1                                                 /LSQ1098
2551  5765          FGET I LZ2                                                /LSQ1099
2552  3151          FMPY TWO                                                  /LSQ1100
```

```
2553  6120          FPUT TWT2                                                  /LSQ1101
2554     0          FEXT                                                       /LSQ1102
2555  4764          JMS I LSELCT                                               /LSQ1103
2556   115          TWT1                                                       /LSQ1104
2557  5760          JMP I RETRN          /RETURN                               /LSQ1105
2560     0  RETRN,  0                                                          /LSQ1106
2561  4437  LOCA,   A                                                          /LSQ1107
2562  4442  LOCB,   B                                                          /LSQ1108
2563  4445  LOCD,   D                                                          /LSQ1109
2564  2601  LSELCT, SELECT                                                     /LSQ1110
2565  4450  LZ2,    Z2                                                         /LSQ1111
2566  2722  LRM21,  RM21                                                       /LSQ1112
2567  2725  LRM31,  RM31                                                       /LSQ1113
2570  2730  LRM12,  RM12                                                       /LSQ1114
2571  2733  LRM22,  RM22                                                       /LSQ1115
2572  2736  LRM32,  RM32                                                       /LSQ1116
2573  2741  LRM13,  RM13                                                       /LSQ1117
2574  2744  LRM23,  RM23                                                       /LSQ1118
2575  2747  LRM33,  RM33                                                       /LSQ1119
                                                                               /LSQ1120
            *2601                                                              /LSQ1121
            /SUBROUTINE TO FIND ANGLE WHICH IS GEOMETRICALLY CLOSEST TO OBSERVED ANG/LSQ1122
2601     0  SELECT, 0                                                          /LSQ1123
2602  1155          TAD MTWO             /SET COUNTER # -2                     /LSQ1124
2603  3305          DCA KSLCT                                                  /LSQ1125
2604  1601          TAD I SELECT         /GET ADDRESS OF FIRST CALCULATED ANGLE /LSQ1126
2605  3244          DCA LANGI                                                  /LSQ1127
2606  2201          ISZ SELECT           /SET RETURN                           /LSQ1128
2607  1306          TAD LANGI            /SET ADDRESS FOR SETTING UP LIST OF ANGLES./LSQ1129
2610  3242          DCA TANG                                                   /LSQ1130
2611  1242  SLCT1,  TAD TANG             /SET ADDRESSES FOR ANG(I+2) AND ANG(I+4)/LSQ1131
2612  1307          TAD SIX                                                    /LSQ1132
2613  3317          DCA TSLCT1                                                 /LSQ1133
2614  1317          TAD TSLCT1                                                 /LSQ1134
2615  1307          TAD SIX                                                    /LSQ1135
2616  3320          DCA TSLCT2                                                 /LSQ1136
2617  4407          JMS I LFPT           /ANG(I)#MODF(CALCULATED ANGLE + 720,360)/LSQ1137
2620  5644          FGET I LANGI                                               /LSQ1138
2621  1311          FADD C720                                                  /LSQ1139
2622  6642          FPUT I TANG                                                /LSQ1140
2623  4314          FDIV C360                                                  /LSQ1141
2624     0          FEXT                                                       /LSQ1142
2625  4434          JMS I LFIX                                                 /LSQ1143
2626  4471          JMS I LFLT                                                 /LSQ1144
2627  4407          JMS I LFPT                                                 /LSQ1145
2630  3314          FMPY C360                                                  /LSQ1146
2631     6          FNEG                                                       /LSQ1147
2632  1642          FADD I TANG                                                /LSQ1148
2633  6642          FPUT I TANG                                                /LSQ1149
2634  2314          FSUB C360            /ANG(I+2)#ANG(I)-360                  /LSQ1150
2635  6717          FPUT I TSLCT1                                              /LSQ1151
2636  1311          FADD C720            /ANG(I+4)#ANG(I)+360                  /LSQ1152
2637  6720          FPUT I TSLCT2                                              /LSQ1153
2640     0          FEXT                                                       /LSQ1154
2641  4474          JMS I LADV3          /ADVANCE ADDRESSES                    /LSQ1155
2642     0  TANG,   0                                                          /LSQ1156
2643  4474          JMS I LADV3                                                /LSQ1157
2644     0  LANGI,  0                                                          /LSQ1158
2645  2305          ISZ KSLCT            /TEST COUNTER                         /LSQ1159
2646  5211          JMP SLCT1            /REPEAT FOR SECOND CALCULATED ANGLE   /LSQ1160
2647  1310          TAD MSIX             /SET COUNTER # -6                     /LSQ1161
2650  3305          DCA KSLCT                                                  /LSQ1162
2651  1306          TAD LANGI            /SET ADDRESS FOR LIST OF ANGLES       /LSQ1163
2652  3242          DCA TANG                                                   /LSQ1164
2653  4407          JMS I LFPT           /SET DMIN#720                         /LSQ1165
2654  5311          FGET C720                                                  /LSQ1166
2655  6317          FPUT DMIN                                                  /LSQ1167
2656     0          FEXT                                                       /LSQ1168
2657  4407  SLCT2,  JMS I LFPT           /COMPUTE ABSF(OBSERVED ANGLE - ANG(I))/LSQ1169
2660  5477          FGET I LYO                                                 /LSQ1170
2661  2642          FSUB I TANG                                                /LSQ1171
2662     7          FABS                                                       /LSQ1172
2663  6322          FPUT DIFF                                                  /LSQ1173
2664  2317          FSUB DMIN            /COMPARE WITH DMIN                    /LSQ1174
2665     0          FEXT                                                       /LSQ1175
2666  1045          TAD HORD                                                   /LSQ1176
2667  7700          SMA CLA                                                    /LSQ1177
2670  5277          JMP SLCT3                                                  /LSQ1178
2671  4407          JMS I LFPT           /IF LESS THAN DMIN, SET DMIN EQUAL TO DIFFE/LSQ1179
2672  5322          FGET DIFF                                                  /LSQ1180
2673  6317          FPUT DMIN                                                  /LSQ1181
```

```
2674  5642          FGET I TANG          /CALCULATED ANGLE # ANG(I)          /LSQ1182
2675  6503          FPUT I LYCALC                                           /LSQ1183
2676     0          FEXT                                                    /LSQ1184
2677  1242  SLCT3,  TAD TANG             /ADVANCE TO NEXT ANGLE IN LIST     /LSQ1185
2700  1154          TAD THR                                                 /LSQ1186
2701  3242          DCA TANG                                                /LSQ1187
2702  2305          ISZ KSLCT            /TEST COUNTER                      /LSQ1188
2703  5257          JMP SLCT2                                               /LSQ1189
2704  5601          JMP I SELECT         /RETURN                            /LSQ1190
2705     0  KSLCT,  0                                                       /LSQ1191
2706  2725  LANGI,  ANGI                                                    /LSQ1192
2707     6  SIX,    6                                                       /LSQ1193
2710  7772  MSIX,   -6                                                      /LSQ1194
2711    12  C720,   0012                                                    /LSQ1195
2712  2640          2640                                                    /LSQ1196
2713     0          0000                                                    /LSQ1197
2714    11  C360,   0011                                                    /LSQ1198
2715  2640          2640                                                    /LSQ1199
2716     0          0000                                                    /LSQ1200
2717     0  TSLCT1,DMIN,RM11,0                                              /LSQ1201
2720     0  TSLCT2, 0                                                       /LSQ1202
2721     0          0                                                       /LSQ1203
2722     0  DIFF,RM21,0                                                     /LSQ1204
2723     0          0                                                       /LSQ1205
2724     0          0                                                       /LSQ1206
2725     0  ANG1,RM31,0                                                     /LSQ1207
2726     0          0                                                       /LSQ1208
2727     0          0                                                       /LSQ1209
2730     0  ANG2,RM12,0                                                     /LSQ1210
2731     0          0                                                       /LSQ1211
2732     0          0                                                       /LSQ1212
2733     0  ANG3,RM22,0                                                     /LSQ1213
2734     0          0                                                       /LSQ1214
2735     0          0                                                       /LSQ1215
2736     0  ANG4,RM32,0                                                     /LSQ1216
2737     0          0                                                       /LSQ1217
2740     0          0                                                       /LSQ1218
2741     0  ANG5,RM13,0                                                     /LSQ1219
2742     0          0                                                       /LSQ1220
2743     0          0                                                       /LSQ1221
2744     0  ANG6,RM23,0                                                     /LSQ1222
2745     0          0                                                       /LSQ1223
2746     0          0                                                       /LSQ1224
2747     0  RM33,   0                                                       /LSQ1225
2750     0          0                                                       /LSQ1226
2751     0          0                                                       /LSQ1227
                                                                            /LSQ1228
                                                                            /LSQ1229
             FH#2752                                                        /LSQ1230
             DIA#FH                                                         /LSQ1231
             AI#FH+33                                                       /LSQ1232
             VEC#AI+207                                                     /LSQ1233
             PI#VEC+33                                                      /LSQ1234
             HP#PI+47                                                       /LSQ1235
             HS#HP+11                                                       /LSQ1236
             KI#HS+11                                                       /LSQ1237
             DV#KI+15                                                       /LSQ1238
             PD#DV                                                          /LSQ1239
             OBS#PD+33                                                      /LSQ1240
                                                                            /LSQ1241
             *3710                                                          /LSQ1242
             /RK. READ KEY INTEGERS AND COMPUTE NV, THE NUMBER OF VARIABLES /LSQ1243
3710  1330  RDKI,   TAD MI3                                                 /LSQ1244
3711  3100          DCA KKI                                                 /LSQ1245
3712  1036          TAD LKI                                                 /LSQ1246
3713  3101          DCA ADKI                                                /LSQ1247
3714  3004          DCA NV                                                  /LSQ1248
3715  4473  RDKII,  JMS I LINTIN                                            /LSQ1249
3716  7440          SZA                                                     /LSQ1250
3717  2004          ISZ NV                                                  /LSQ1251
3720  3501          DCA I ADKI                                              /LSQ1252
3721  2101          ISZ ADKI                                                /LSQ1253
3722  2100          ISZ KKI                                                 /LSQ1254
3723  5315          JMP RDKII                                               /LSQ1255
3724  1004          TAD NV                                                  /LSQ1256
3725  7041          CIA                                                     /LSQ1257
3726  3035          DCA MNSNV                                               /LSQ1258
3727  5466          JMP I LOMGA                                             /LSQ1259
3730  7763  MI3,    -15                                                     /LSQ1260
                                                                            /LSQ1261
             /PP. PRINT ARRAY OF PARAMETERS AND KEY INTEGERS                /LSQ1262
```

```
3731  1037  PRPAR,  TAD LP          /SET STARTING ADDRESSES OF PARAMETERS AND K/LSQ1263
3732  3365          DCA TPP         /INTEGERS                                   /LSQ1264
3733  1036          TAD LKI                                                     /LSQ1265
3734  3101          DCA ADKI                                                    /LSQ1266
3735  1376          TAD MIN7        /SET COUNTER FOR LOOP TO PRINT FIRST SEVEN /LSQ1267
3736  3100          DCA KKI         /PARAMETERS WITH 2 PLACES BEFORE AND 5 AFTE/LSQ1268
3737  4476  PP1,    JMS I LCRLF     /DECIMAL POINT                              /LSQ1269
3740  1501          TAD I ADKI                                                  /LSQ1270
3741  4464          JMS I LIOUT                                                 /LSQ1271
3742  4407          JMS I LFPT                                                  /LSQ1272
3743  5765          FGET I TPP                                                  /LSQ1273
3744     0          FEXT                                                        /LSQ1274
3745  4777          JMS I LVFOUT                                                /LSQ1275
3746     2          2                                                           /LSQ1276
3747     5          5                                                           /LSQ1277
3750  1365          TAD TPP         /ADVANCE ADDRESSES                          /LSQ1278
3751  1154          TAD THR                                                     /LSQ1279
3752  3365          DCA TPP                                                     /LSQ1280
3753  2101          ISZ ADKI                                                    /LSQ1281
3754  2100          ISZ KKI         /TEST COUNTER                               /LSQ1282
3755  5337          JMP PP1                                                     /LSQ1283
3756  1375          TAD MIN6        /SET COUNTER FOR LOOP TO PRINT LAST SIX PAR/LSQ1284
3757  3100          DCA KKI         /WITH STANDARD FORMAT OF 3 BEFORE AND 4 AFT/LSQ1285
3760  4476  PP2,    JMS I LCRLF     /DECIMAL POINT                              /LSQ1286
3761  1501          TAD I ADKI                                                  /LSQ1287
3762  4464          JMS I LIOUT                                                 /LSQ1288
3763  4427          JMS I LFOP                                                  /LSQ1289
3764  7777          -1                                                          /LSQ1290
3765     0  TPP,    0                                                           /LSQ1291
3766  1365          TAD TPP         /ADVANCE ADDRESSES                          /LSQ1292
3767  1154          TAD THR                                                     /LSQ1293
3770  3365          DCA TPP                                                     /LSQ1294
3771  2101          ISZ ADKI                                                    /LSQ1295
3772  2100          ISZ KKI         /TEST COUNTER                               /LSQ1296
3773  5360          JMP PP2                                                     /LSQ1297
3774  5466          JMP I LOMGA     /RETURN TO WAITING LOOP                     /LSQ1298
3775  7772  MIN6,   -6                                                          /LSQ1299
3776  7771  MIN7,   -7                                                          /LSQ1300
3777  7200  LVFOUT, VFOUT                                                       /LSQ1301
                                                                                /LSQ1302
            *4400                                                               /LSQ1303
            /SUBROUTINE TO SOLVE THE EQUATION, A*COS(Z)+B*SIN(Z)+D#0            /LSQ1304
4400     0  TREQ,   0                                                           /LSQ1305
4401  4407          JMS I LFPT                                                  /LSQ1306
4402  5237          FGET A          /R#SQRTF(A*A+B*B)                           /LSQ1307
4403  6545          FPUT I ADRB     /SET UP A FOR COMPUTING ARTAN(B/A)          /LSQ1308
4404  3237          FMPY A                                                      /LSQ1309
4405  6250          FPUT R                                                      /LSQ1310
4406  5242          FGET B                                                      /LSQ1311
4407  3242          FMPY B                                                      /LSQ1312
4410  1250          FADD R                                                      /LSQ1313
4411     2          FSQT                                                        /LSQ1314
4412  6250          FPUT R                                                      /LSQ1315
4413  5242          FGET B          /COMPUTE BETA#ARCTANGENT B/A                /LSQ1316
4414     5          FATN                                                        /LSQ1317
4415  6237          FPUT BETA                                                   /LSQ1318
4416  5245          FGET D          /COS(GAMMA)#-D/R                            /LSQ1319
4417     6          FNEG                                                        /LSQ1320
4420  4250          FDIV R                                                      /LSQ1321
4421  6545          FPUT I ADRB     /SET UP FOR COMPUTING ARCTANGENT            /LSQ1322
4422  3545          FMPY I ADRB     /COMPUTE SIN(GAMMA)                         /LSQ1323
4423     6          FNEG                                                        /LSQ1324
4424  1146          FADD ONE                                                    /LSQ1325
4425     2          FSQT                                                        /LSQ1326
4426     5          FATN            /COMPUTE GAMMA                              /LSQ1327
4427  6242          FPUT GAMMA      /Z1#BETA+GAMMA                              /LSQ1328
4430  1237          FADD BETA                                                   /LSQ1329
4431  6245          FPUT Z1                                                     /LSQ1330
4432  5237          FGET BETA       /Z2#BETA-GAMMA                              /LSQ1331
4433  2242          FSUB GAMMA                                                  /LSQ1332
4434  6250          FPUT Z2                                                     /LSQ1333
4435     0          FEXT                                                        /LSQ1334
4436  5600          JMP I TREQ                                                  /LSQ1335
4437     0  A,BETA, 0                                                           /LSQ1336
4440     0          0                                                           /LSQ1337
4441     0          0                                                           /LSQ1338
4442     0  B,GAMMA,0                                                           /LSQ1339
4443     0          0                                                           /LSQ1340
4444     0          0                                                           /LSQ1341
4445     0  D,Z1,   0                                                           /LSQ1342
4446     0          0                                                           /LSQ1343
```

```
4447     0          0                                                    /LSQ1344
4450     0  R,Z2,   0                                                    /LSQ1345
4451     0          0                                                    /LSQ1346
4452     0          0                                                    /LSQ1347
                                                                         /LSQ1348
            /RH. READ INDICES OF ORIENTING REFLECTIONS                   /LSQ1349
4453  4426  RDH,    JMS I LFNP                                           /LSQ1350
4454  7772          -6                                                   /LSQ1351
4455  3316          HP                                                   /LSQ1352
4456  5466          JMP I LOMGA                                          /LSQ1353
                                                                         /LSQ1354
            /TY. ALLOW BUT IGNORE TYPING                                 /LSQ1355
4457  4473  TYPE,   JMS I LINTIN                                         /LSQ1356
4460  7200          CLA                                                  /LSQ1357
4461  5257          JMP TYPE                                             /LSQ1358
                                                                         /LSQ1359
            /SPACE BEFORE PRINTING ANGLES OF OBSERVATIONS                /LSQ1360
4462     0  PSP,    0                                                    /LSQ1361
4463  4476          JMS I LCRLF                                          /LSQ1362
4464  1273          TAD M27                                              /LSQ1363
4465  3274          DCA KPSP                                             /LSQ1364
4466  1275          TAD SP                                               /LSQ1365
4467  4470          JMS I LOPCH                                          /LSQ1366
4470  2274          ISZ KPSP                                             /LSQ1367
4471  5266          JMP .-3                                              /LSQ1368
4472  5662          JMP I PSP                                            /LSQ1369
4473  7745  M27,    -33                                                  /LSQ1370
4474     0  KPSP,   0                                                    /LSQ1371
4475   240  SP,     240                                                  /LSQ1372
                                                                         /LSQ1373


            /CALCULATION OF CARTESIAN TRANSFORMATION MATRIX, BB          /LSQ1375
                                                                         /LSQ1376
            LOMGA#66                                                     /LSQ1377
            LFPT#0007                                                    /LSQ1378
            LCOP#0024                                                    /LSQ1379
            LFNP#0026                                                    /LSQ1380
            LFOP#0027                                                    /LSQ1381
            ONE#0146                                                     /LSQ1382
            TWO#0151                                                     /LSQ1383
            COMN#0100                                                    /LSQ1384
            CS1S#COMN                                                    /LSQ1385
            SIN1#COMN                                                    /LSQ1386
            CSB3#COMN                                                    /LSQ1387
            CS2S#COMN+3                                                  /LSQ1388
            SIN2#COMN+3                                                  /LSQ1389
            CS3S#COMN+6                                                  /LSQ1390
            SIN3#COMN+6                                                  /LSQ1391
            CSB2#COMN+6                                                  /LSQ1392
            ALPH#COMN+11                                                 /LSQ1393
            B3#COMN+11                                                   /LSQ1394
            B2#COMN+25                                                   /LSQ1395
                                                                         /LSQ1396
            *4000                                                        /LSQ1397
4000     0  CALBB,0                                                      /LSQ1398
4001  4407        JMS   I     LFPT                                       /LSQ1399
4002  5333        FGET        COS1  /STORE SQUARES OF CELL PARAMETER COSINES /LSQ1400
4003  3333        FMPY        COS1                                       /LSQ1401
4004  6100        FPUT        CS1S                                       /LSQ1402
4005  5336        FGET        COS2                                       /LSQ1403
4006  3336        FMPY        COS2                                       /LSQ1404
4007  6103        FPUT        CS2S                                       /LSQ1405
4010  5341        FGET        COS3                                       /LSQ1406
4011  3341        FMPY        COS3                                       /LSQ1407
4012  6106        FPUT        CS3S                                       /LSQ1408
4013  5151        FGET        TWO   /CALCULATE ALPH, SQRT(1-COS1**2-COS2**2 /LSQ1409
4014  3333        FMPY        COS1  /-COS3**2+2*COS1*COS2*COS3)          /LSQ1410
4015  3336        FMPY        COS2                                       /LSQ1411
4016  3341        FMPY        COS3                                       /LSQ1412
4017  1146        FADD        ONE                                        /LSQ1413
4020  2100        FSUB        CS1S                                       /LSQ1414
4021  2103        FSUB        CS2S                                       /LSQ1415
4022  2106        FSUB        CS3S                                       /LSQ1416
4023     2        FSQT                                                   /LSQ1417
4024  6111        FPUT        ALPH                                       /LSQ1418
4025  5146        FGET        ONE   /CALCULATE SIN1                      /LSQ1419
4026  2100        FSUB        CS1S                                       /LSQ1420
4027     2        FSQT                                                   /LSQ1421
```

```
4030  6100        FPUT        SIN1  /SIN1 STILL IN F.A.                                  /LSQ1422
4031  4322        FDIV        A1    /CALCULATE BB11, SIN1/(A1*ALPH)                     /LSQ1423
4032  4111        FDIV        ALPH                                                      /LSQ1424
4033  6344        FPUT        BB11                                                      /LSQ1425
4034  5146        FGET        ONE   /CALCULATE SIN2                                     /LSQ1426
4035  2103        FSUB        CS2S                                                      /LSQ1427
4036     2        FSQT                                                                  /LSQ1428
4037  6103        FPUT        SIN2  /SIN2 STILL IN F.A.                                 /LSQ1429
4040  4325        FDIV        A2    /CALCULATE B2, SIN2/(A2*ALPH)                       /LSQ1430
4041  4111        FDIV        ALPH                                                      /LSQ1431
4042  6125        FPUT        B2                                                        /LSQ1432
4043  5146        FGET        ONE   /CALCULATE SIN3                                     /LSQ1433
4044  2106        FSUB        CS3S                                                      /LSQ1434
4045     2        FSQT                                                                  /LSQ1435
4046  6106        FPUT        SIN3  /SIN3 STILL IN F.A.                                 /LSQ1436
4047  4330        FDIV        A3    /CALCULATE B3, SIN3/(A3*ALPH)                       /LSQ1437
4050  4111        FDIV        ALPH                                                      /LSQ1438
4051  6111        FPUT        B3                                                        /LSQ1439
4052  5341        FGET        COS3  /CALCULATE CSB2,(COS3*COS1-COS2)/                   /LSQ1440
4053  3333        FMPY        COS1  /(SIN3*SIN1)                                        /LSQ1441
4054  2336        FSUB        COS2                                                      /LSQ1442
4055  4106        FDIV        SIN3                                                      /LSQ1443
4056  4100        FDIV        SIN1                                                      /LSQ1444
4057  6106        FPUT        CSB2  /CSB2 STILL IN F.A.                                 /LSQ1445
4060  3111        FMPY        B3    /CALCULATE BB13, B3*CSB2                            /LSQ1446
4061  6366        FPUT        BB13                                                      /LSQ1447
4062  5333        FGET        COS1  /CALCULATE CSB3,(COS1*COS2-COS3)/(SIN1*SIN2)        /LSQ1448
4063  3336        FMPY        COS2                                                      /LSQ1449
4064  2341        FSUB        COS3                                                      /LSQ1450
4065  4100        FDIV        SIN1                                                      /LSQ1451
4066  4103        FDIV        SIN2                                                      /LSQ1452
4067  6100        FPUT        CSB3  /CSB3 STILL IN F.A.                                 /LSQ1453
4070  3125        FMPY        B2    /CALCULATE BB12, B2*CSB3                            /LSQ1454
4071  6355        FPUT        BB12                                                      /LSQ1455
4072  5106        FGET        CSB2  /CALCULATE SNB2                                     /LSQ1456
4073  3106        FMPY        CSB2                                                      /LSQ1457
4074     6        FNEG                                                                  /LSQ1458
4075  1146        FADD        ONE                                                       /LSQ1459
4076     2        FSQT              /SNB2 IN F.A.                                       /LSQ1460
4077     6        FNEG              /CALCULATE BB23, -B3*SNB2*COS1                      /LSQ1461
4100  3111        FMPY        B3                                                        /LSQ1462
4101  3333        FMPY        COS1                                                      /LSQ1463
4102  6371        FPUT        BB23                                                      /LSQ1464
4103  5100        FGET        CSB3  /CALCULATE SNB3                                     /LSQ1465
4104  3100        FMPY        CSB3                                                      /LSQ1466
4105     6        FNEG                                                                  /LSQ1467
4106  1146        FADD        ONE                                                       /LSQ1468
4107     2        FSQT              /SNB3 IN F.A.                                       /LSQ1469
4110  3125        FMPY        B2    /CALCULATE BB22, B2*SNB3                            /LSQ1470
4111  6360        FPUT        BB22                                                      /LSQ1471
4112  5146        FGET        ONE   /CALCULATE BB33, 1/A3                               /LSQ1472
4113  4330        FDIV        A3                                                        /LSQ1473
4114  6374        FPUT        BB33                                                      /LSQ1474
4115     0        FEXT                                                                  /LSQ1475
4116  5600        JMP   I     CALBB                                                     /LSQ1476
            *4147                                                                       /LSQ1477
4147     0  BB21, 0                  /CONSTANT                                          /LSQ1478
4150     0        0                                                                     /LSQ1479
4151     0        0                                                                     /LSQ1480
4152     0  BB31, 0                  /CONSTANT                                          /LSQ1481
4153     0        0                                                                     /LSQ1482
4154     0        0                                                                     /LSQ1483
            *4163                                                                       /LSQ1484
4163     0  BB32, 0                  /CONSTANT                                          /LSQ1485
4164     0        0                                                                     /LSQ1486
4165     0        0                                                                     /LSQ1487
            WVL#4117                                                                    /LSQ1488
            A1#WVL+3                                                                    /LSQ1489
            A2#A1+3                                                                     /LSQ1490
            A3#A2+3                                                                     /LSQ1491
            COS1#A3+3                                                                   /LSQ1492
            COS2#COS1+3                                                                 /LSQ1493
            COS3#COS2+3                                                                 /LSQ1494
            BB11#COS3+3                                                                 /LSQ1495
            BB12#BB31+3                                                                 /LSQ1496
            BB22#BB12+3                                                                 /LSQ1497
            BB13#BB32+3                                                                 /LSQ1498
            BB23#BB13+3                                                                 /LSQ1499
            BB33#BB23+3                                                                 /LSQ1500
```

```
          /CALCULATION OF ORIENTATION MATRIX, M, AND PRODUCT OF THE ORIENTATION AN/LSQ1502
          /THE CARTESIAN TRANSFORMATION MATRICES.                                 /LSQ1503
                                                                                  /LSQ1504
          COSO#111                                                                /LSQ1505
          COSC#114                                                                /LSQ1506
          COSP#117                                                                /LSQ1507
          SINO#122                                                                /LSQ1508
          SINP#125                                                                /LSQ1509
          TEM1#130                                                                /LSQ1510
          TEM2#133                                                                /LSQ1511
          COMN#0100                                                               /LSQ1512
          Y2P#COMN                                                                /LSQ1513
          T11#COMN                                                                /LSQ1514
          Y2S#COMN+11                                                             /LSQ1515
          BB11#4144                                                               /LSQ1516
          LOMGA#66                                                                /LSQ1517
          LFPT#0007                                                               /LSQ1518
          LMV#0025                                                                /LSQ1519
          LFNP#0026                                                               /LSQ1520
          LUNT#0030                                                               /LSQ1521
          LPRP#0031                                                               /LSQ1522
          LTRN#0032                                                               /LSQ1523
          LMM#0033                                                                /LSQ1524
          THR#0154                                                                /LSQ1525
          MTWO#0155                                                               /LSQ1526
          LCOP#24                                                                 /LSQ1527
          HS#3327                                                                 /LSQ1528
          PI#3247                                                                 /LSQ1529
                                                                                  /LSQ1530
          *4200                                                                   /LSQ1531
4200    0 CALMB,0                                                                 /LSQ1532
4201 1155        TAD          MTWO     /SET COUNTER                               /LSQ1533
4202 3363        DCA          MK                                                  /LSQ1534
4203 1316        TAD          LX11     /STORE LOCATIONS                           /LSQ1535
4204 3366        DCA          VEC1                                                /LSQ1536
4205 1303        TAD          LY2P                                                /LSQ1537
4206 3263        DCA          VEC2                                                /LSQ1538
4207 1366 MST,   TAD          VEC1                                                /LSQ1539
4210 1154        TAD          THR                                                 /LSQ1540
4211 3367        DCA          VEC1+1                                              /LSQ1541
4212 1154        TAD          THR                                                 /LSQ1542
4213 1367        TAD          VEC1+1                                              /LSQ1543
4214 3370        DCA          VEC1+2                                              /LSQ1544
4215 4407        JMS    I     LFPT     /COMPUTE VECTORS IN ORIENTER SYS.          /LSQ1545
4216 5355        FGET         CHI                                                 /LSQ1546
4217    4        FCOS                                                             /LSQ1547
4220 6114        FPUT         COSC                                                /LSQ1548
4221 5352        FGET         OMG                                                 /LSQ1549
4222    4        FCOS                                                             /LSQ1550
4223 6111        FPUT         COSO                                                /LSQ1551
4224 3114        FMPY         COSC                                                /LSQ1552
4225 6130        FPUT         TEM1     /SAVE PRODUCT OF COS(CHI) AND COS(OMEGA).  /LSQ1553
4226 5355        FGET         CHI                                                 /LSQ1554
4227    3        FSIN                                                             /LSQ1555
4230 3111        FMPY         COSO                                                /LSQ1556
4231 6770        FPUT   I     VEC1+2   /THIRD COMPONENT OF VECTOR # SIN(CHI)*COS(OME/LSQ1557
4232 5360        FGET         PHI                                                 /LSQ1558
4233    4        FCOS                                                             /LSQ1559
4234 6117        FPUT         COSP                                                /LSQ1560
4235 5352        FGET         OMG                                                 /LSQ1561
4236    3        FSIN                                                             /LSQ1562
4237 6122        FPUT         SINO                                                /LSQ1563
4240 3117        FMPY         COSP                                                /LSQ1564
4241 6133        FPUT         TEM2     /STORE SIN(OMEGA)*COS(PHI).                /LSQ1565
4242 5360        FGET         PHI                                                 /LSQ1566
4243    3        FSIN                                                             /LSQ1567
4244 6125        FPUT         SINP                                                /LSQ1568
4245 3130        FMPY         TEM1                                                /LSQ1569
4246 1133        FADD         TEM2                                                /LSQ1570
4247 6767        FPUT   I     VEC1+1   /2ND COMPONENT # SIN(PHI)*COS(CHI)*COS(OMEGA)/LSQ1571
4250 5122        FGET         SINO     /                 +COS(PHI)*SIN(OMEGA).    /LSQ1572
4251 3125        FMPY         SINP                                                /LSQ1573
4252 6133        FPUT         TEM2     /STORE SIN(OMEGA)*SIN(PHI).                /LSQ1574
4253 5117        FGET         COSP                                                /LSQ1575
4254 3130        FMPY         TEM1                                                /LSQ1576
4255 2133        FSUB         TEM2                                                /LSQ1577
4256 6766        FPUT   I     VEC1     /FIRST COMPONENT # COS(PHI)*COS(CHI)*COS(OMEG/LSQ1578
4257    0        FEXT                  /                   -SIN(PHI)*SIN(OMEGA).  /LSQ1579
4260 4425        JMS    I     LMV      /COMPUTE VECTOR IN CRYSTAL SYSTEM          /LSQ1580
4261 4144        BB11                                                             /LSQ1581
4262 4341        HI                                                               /LSQ1582
```

```
4263     0  VEC2, 0                      /VARIABLE ADDRESS                                  /LSQ1583
4264  1317        TAD          LYIS      /ADVANCE ADDRESSES TO LOCATIONS                    /LSQ1584
4265  3366        DCA          VEC1      /FOR SECONDARY VECTORS                             /LSQ1585
4266  1307        TAD          LY2S                                                         /LSQ1586
4267  3263        DCA          VEC2                                                         /LSQ1587
4270  4424        JMS    I     LCOP      /GET INDICES AND ANGLES FOR SECONDARY REFLECT/LSQ1588
4271  7767        -11                                                                       /LSQ1589
4272  3327        HS                                                                        /LSQ1590
4273  4341        H1                                                                        /LSQ1591
4274  4424        JMS    I     LCOP                                                         /LSQ1592
4275  7767        -11                                                                       /LSQ1593
4276  3305        P1+36                                                                     /LSQ1594
4277  4352        OMG                                                                       /LSQ1595
4300  2363        ISZ          MK        /TEST COUNTER                                      /LSQ1596
4301  5207        JMP          MST       /REPEAT FOR SECONDARY REFLECTION                   /LSQ1597
4302  4430        JMS    I     LUNT                                                         /LSQ1598
4303   100  LY2P, Y2P                    /USED AS CONSTANT                                  /LSQ1599
4304  4341        XI11                    /FIRST COLUMN OF MATRIX XI                         /LSQ1600
4305  4431        JMS    I     LPRP      /COMPUTE MATRIX XI                                 /LSQ1601
4306  4341        XI11                                                                       /LSQ1602
4307   111  LY2S, Y2S                    /PERP WILL COPY Y2S ONTO ITSELF                    /LSQ1603
4310  4363        XI13                    /IN COMMON                                         /LSQ1604
4311  4431        JMS    I     LPRP                                                         /LSQ1605
4312  4363        XI13                                                                       /LSQ1606
4313  4341        XI11                                                                       /LSQ1607
4314  4352        XI12                                                                       /LSQ1608
4315  4431        JMS    I     LPRP      /COMPUTE MATRIX X                                  /LSQ1609
4316  7600  LXI1, XI1                                                                       /LSQ1610
4317  7611  LYIS, YIS                                                                       /LSQ1611
4320  7622        XI3                                                                       /LSQ1612
4321  4431        JMS    I     LPRP                                                         /LSQ1613
4322  7622        XI3                                                                       /LSQ1614
4323  7600        XI1                                                                       /LSQ1615
4324  7611        XI2                                                                       /LSQ1616
4325  4432        JMS    I     LTRN      /TRANSPOSE XI                                      /LSQ1617
4326  4341        XI11                                                                       /LSQ1618
4327   100        TI1                                                                       /LSQ1619
4330  4433        JMS    I     LMM       /COMPUTE ORIENTATION                               /LSQ1620
4331  7600        XI1                     /MATRIX, M#X*T                                     /LSQ1621
4332   100        TI1                                                                       /LSQ1622
4333  4341        MI1                                                                       /LSQ1623
4334  4433        JMS    I     LMM       /COMPUTE PRODUCT OF M AND BB                       /LSQ1624
4335  4341        MI1                                                                       /LSQ1625
4336  4144        BB11                                                                      /LSQ1626
4337  7600        MB11                                                                      /LSQ1627
4340  5600        JMP    I     CALMB                                                        /LSQ1628
            H1#4341                                                                         /LSQ1629
            XI11#H1                                                                         /LSQ1630
            MI1#H1                                                                          /LSQ1631
            H2#H1+3                                                                         /LSQ1632
            XI21#H2                                                                         /LSQ1633
            M21#H2                                                                          /LSQ1634
            H3#H2+3                                                                         /LSQ1635
            XI31#H3                                                                         /LSQ1636
            M31#H3                                                                          /LSQ1637
            OMG#H3+3                                                                        /LSQ1638
            XI12#OMG                                                                        /LSQ1639
            M12#OMG                                                                         /LSQ1640
            CHI#OMG+3                                                                       /LSQ1641
            XI22#CHI                                                                        /LSQ1642
            M22#CHI                                                                         /LSQ1643
            PHI#CHI+3                                                                       /LSQ1644
            XI32#PHI                                                                        /LSQ1645
            M32#PHI                                                                         /LSQ1646
            MK#PHI+3                                                                        /LSQ1647
            XI13#MK                                                                         /LSQ1648
            M13#MK                                                                          /LSQ1649
            VEC1#MK+3                                                                       /LSQ1650
            XI23#VEC1                                                                       /LSQ1651
            M23#VEC1                                                                        /LSQ1652
            XI33#VEC1+3                                                                     /LSQ1653
            M33#XI33                                                                        /LSQ1654
            XI1#7600                                                                        /LSQ1655
            MB11#XI1                                                                        /LSQ1656
            YIS#7611                                                                        /LSQ1657
            XI2#YIS                                                                         /LSQ1658
            MB12#YIS                                                                        /LSQ1659
            XI3#7622                                                                        /LSQ1660
            MB13#XI3                                                                        /LSQ1661
```

```
          /SYMMETRIC MATRIX INVERTER                                          /LSQ1663
          THR#154                                                             /LSQ1664
          LADR#23                                                             /LSQ1665
          LFPT#7                                                              /LSQ1666
          ONE#146                                                             /LSQ1667
          ZERO#5107                                                           /LSQ1668
          *100                                                                /LSQ1669
100     0 AII,    0                    /ADDRESSES OF ELEMENTS OF MATRIX A     /LSQ1670
101     0 AIJ,    0                                                           /LSQ1671
102     0 AIK,    0                                                           /LSQ1672
103     0 AJJ,    0                                                           /LSQ1673
104     0 AJK,    0                                                           /LSQ1674
105     0 IP,     0                    /COUNTERS                              /LSQ1675
106     0 JP,     0                                                           /LSQ1676
107     0 KP,     0                                                           /LSQ1677
110     0 IS,     0                                                           /LSQ1678
111     0 JS,     0                                                           /LSQ1679
112     0 JPP,    0                                                           /LSQ1680
113     0 LI,     0                    /ADDRESS OF INTERCHANGE INDICATOR      /LSQ1681
114     0 MN,     0                    /MINUS THE ORDER OF THE MATRIX         /LSQ1682
115     0 QIJ,    0                    /ADDRESSES OF ELEMENTS OF MATRIX Q     /LSQ1683
116     0 QIK,    0                                                           /LSQ1684
117     0 BAJJ,   0                    /BIGGEST DIAGONAL ELEMENT              /LSQ1685
120     0         0                                                           /LSQ1686
121     0         0                                                           /LSQ1687
122     0 TEMP,   0                    /TEMPORARY                             /LSQ1688
123     0         0                                                           /LSQ1689
124     0         0                                                           /LSQ1690
          *275                                                                /LSQ1691
275   754 KMP3,   MPY3                                                        /LSQ1692
276     0 INT,    0                    /SUBROUTINE TO INTERCHANGE TWO ROW-COLUMNS /LSQ1693
277  3106 X45,    DCA JP                                                      /LSQ1694
300  1100         TAD AII                                                     /LSQ1695
301  3315         DCA AIJS                                                    /LSQ1696
302  1106         TAD JP                                                      /LSQ1697
303  7041         CIA                                                         /LSQ1698
304  1513         TAD I LI                                                    /LSQ1699
305  4675         JMS I KMP3                                                  /LSQ1700
306  1100         TAD AII                                                     /LSQ1701
307  3342         DCA AIMS                                                    /LSQ1702
310  1342         TAD AIMS                                                    /LSQ1703
311  3316         DCA AJMS                                                    /LSQ1704
312  1100         TAD AII                                                     /LSQ1705
313  3341         DCA AIIS                                                    /LSQ1706
314  4344 X46,    JMS EXCH                                                    /LSQ1707
315     0 AIJS,   0                                                           /LSQ1708
316     0 AJMS,   0                                                           /LSQ1709
317  1315 X47,    TAD AIJS                                                    /LSQ1710
320  1154         TAD THR                                                     /LSQ1711
321  3315         DCA AIJS                                                    /LSQ1712
322  1513 X48,    TAD I LI                                                    /LSQ1713
323  7041         CIA                                                         /LSQ1714
324  1106         TAD JP                                                      /LSQ1715
325  7700         SMA CLA                                                     /LSQ1716
326  5333         JMP X50                                                     /LSQ1717
327  1106 X49,    TAD JP                                                      /LSQ1718
330  7040         CMA                                                         /LSQ1719
331  4675         JMS I KMP3                                                  /LSQ1720
332  5334         JMP X50+1                                                   /LSQ1721
333  1154 X50,    TAD THR                                                     /LSQ1722
334  1316         TAD AJMS                                                    /LSQ1723
335  3316         DCA AJMS                                                    /LSQ1724
336  2106 X51,    ISZ JP                                                      /LSQ1725
337  5314         JMP X46                                                     /LSQ1726
340  4344 X52,    JMS EXCH                                                    /LSQ1727
341     0 AIIS,   0                                                           /LSQ1728
342     0 AIMS,   0                                                           /LSQ1729
343  5676 X53,    JMP I INT                                                   /LSQ1730
                                                                              /LSQ1731
344     0 EXCH,   0                    /SUBROUTINE TO EXCHANGE TWO MATRIX ELEMENTS/LSQ1732
345  4423         JMS I LADR                                                  /LSQ1733
346  7776         -2                                                          /LSQ1734
347     0 LA,     0                                                           /LSQ1735
350     0 LB,     0                                                           /LSQ1736
351  4407         JMS I LFPT                                                  /LSQ1737
352  5747         FGET I LA                                                   /LSQ1738
353  6122         FPUT TEMP                                                   /LSQ1739
354  5750         FGET I LB                                                   /LSQ1740
355  6747         FPUT I LA                                                   /LSQ1741
356  5122         FGET TEMP                                                   /LSQ1742
357  6750         FPUT I LB                                                   /LSQ1743
```

```
360     0          FEXT                                                    /LSQ1744
361  5744          JMP I EXCH                                              /LSQ1745
                                                                           /LSQ1746
362  2364  RET,    ISZ SMI              /NORMAL EXIT                       /LSQ1747
363  5764  ERR,    JMP I SMI                                               /LSQ1748
                                                                           /LSQ1749
364     0  SMI,    0                    /MAIN SUBROUTINE ENTRY             /LSQ1750
365  1764          TAD I SMI            /START MAIN DIAGONALIZING LOOP     /LSQ1751
366  3100          DCA AII                                                 /LSQ1752
367  2364          ISZ SMI                                                 /LSQ1753
370  1764          TAD I SMI                                               /LSQ1754
371  3114          DCA MN                                                  /LSQ1755
372  2364          ISZ SMI                                                 /LSQ1756
373  1114          TAD MN                                                  /LSQ1757
374  4675          JMS I KMP3                                              /LSQ1758
375  1100          TAD AII                                                 /LSQ1759
376  3113          DCA LI                                                  /LSQ1760
377  1114          TAD MN                                                  /LSQ1761
400  3105          DCA IP                                                  /LSQ1762
401  1100  X2,     TAD AII              /START LOOP TO FIND LARGEST DIAGONAL ELEMEN/LSQ1763
402  3103          DCA AJJ                                                 /LSQ1764
403  4407          JMS I LFPT                                              /LSQ1765
404  5374          FGET LGNG                                               /LSQ1766
405  6117          FPUT BAJJ                                               /LSQ1767
406     0          FEXT                                                    /LSQ1768
407  1105          TAD IP                                                  /LSQ1769
410  3106          DCA JP                                                  /LSQ1770
411  4407  X3,     JMS I LFPT                                              /LSQ1771
412  5117          FGET BAJJ                                               /LSQ1772
413  2503          FSUB I AJJ                                              /LSQ1773
414     0          FEXT                                                    /LSQ1774
415  1045          TAD 45                                                  /LSQ1775
416  7700          SMA CLA                                                 /LSQ1776
417  5226          JMP X5                                                  /LSQ1777
420  4407  X4,     JMS I LFPT                                              /LSQ1778
421  5503          FGET I AJJ                                              /LSQ1779
422  6117          FPUT BAJJ                                               /LSQ1780
423     0          FEXT                                                    /LSQ1781
424  1106          TAD JP                                                  /LSQ1782
425  3513          DCA I LI                                                /LSQ1783
426  1106  X5,     TAD JP                                                  /LSQ1784
427  7041          CIA                                                     /LSQ1785
430  4772          JMS I LMP3                                              /LSQ1786
431  1103          TAD AJJ                                                 /LSQ1787
432  3103          DCA AJJ                                                 /LSQ1788
433  2106          ISZ JP                                                  /LSQ1789
434  5211          JMP X3               /CONTINUE LOOP TO FIND LARGEST DIAGONAL ELE/LSQ1790
435  1105  X7,     TAD IP               /INTERCHANGE ROW-COLUMNS           /LSQ1791
436  4771          JMS I LINT                                              /LSQ1792
437  4407  X8,     JMS I LFPT           /TEST FOR NON-POSITIVE DEFINITE MATRIX /LSQ1793
440  5500          FGET I AII                                              /LSQ1794
441     0          FEXT                                                    /LSQ1795
442  1045          TAD 45                                                  /LSQ1796
443  7710          SPA CLA                                                 /LSQ1797
444  5773          JMP I LERR           /ERROR RETURN                      /LSQ1798
445  4407  X9,     JMS I LFPT           /TAKE RECIPROCAL OF DIAGONAL ELEMENT /LSQ1799
446  5146          FGET ONE                                                /LSQ1800
447  4500          FDIV I AII                                              /LSQ1801
450  6500          FPUT I AII                                              /LSQ1802
451     0          FEXT                                                    /LSQ1803
452  1113  X10,    TAD LI               /START LOOP TO SET UP Q MATRIX     /LSQ1804
453  1154          TAD THR                                                 /LSQ1805
454  3116          DCA QIK                                                 /LSQ1806
455  1100          TAD AII                                                 /LSQ1807
456  1154          TAD THR                                                 /LSQ1808
457  3102          DCA AIK                                                 /LSQ1809
460  1105          TAD IP                                                  /LSQ1810
461  7001          IAC                                                     /LSQ1811
462  3107          DCA KP                                                  /LSQ1812
463  1107  X11,    TAD KP                                                  /LSQ1813
464  7650          SNA CLA                                                 /LSQ1814
465  5377          JMP X24              /EXIT FROM MAIN DIAGONALIZING LOOP /LSQ1815
466  4407  X12,    JMS I LFPT                                              /LSQ1816
467  5500          FGET I AII                                              /LSQ1817
470     6          FNEG                                                    /LSQ1818
471  3502          FMPY I AIK                                              /LSQ1819
472  6516          FPUT I QIK                                              /LSQ1820
473     0          FEXT                                                    /LSQ1821
474  1116  X13,    TAD QIK                                                 /LSQ1822
475  1154          TAD THR                                                 /LSQ1823
476  3116          DCA QIK                                                 /LSQ1824
```

```
477  1102          TAD AIK                                                  /LSQ1825
500  1154          TAD THR                                                  /LSQ1826
501  3102          DCA AIK                                                  /LSQ1827
502  2107  X14,    ISZ KP                                                   /LSQ1828
503  5266          JMP X12          /CONTINUE LOOP TO SET UP Q MATRIX       /LSQ1829
504  1105  X15,    TAD IP           /START OUTER LOOP FOR DIAGONALIZING     /LSQ1830
505  7041          CIA                                                      /LSQ1831
506  4772          JMS I LMP3                                               /LSQ1832
507  1100          TAD AII                                                  /LSQ1833
510  3104          DCA AJK                                                  /LSQ1834
511  1100          TAD AII                                                  /LSQ1835
512  1154          TAD THR                                                  /LSQ1836
513  3101          DCA AIJ                                                  /LSQ1837
514  1113          TAD LI                                                   /LSQ1838
515  1154          TAD THR                                                  /LSQ1839
516  3115          DCA QIJ                                                  /LSQ1840
517  1105          TAD IP                                                   /LSQ1841
520  7001          IAC                                                      /LSQ1842
521  3106          DCA JP                                                   /LSQ1843
522  1115  X16,    TAD QIJ          /START INNER LOOP FOR DIAGONALIZING     /LSQ1844
523  3116          DCA QIK                                                  /LSQ1845
524  1106          TAD JP                                                   /LSQ1846
525  3107          DCA KP                                                   /LSQ1847
526  4407  X17,    JMS I LFPT                                               /LSQ1848
527  5516          FGET I QIK                                               /LSQ1849
530  3501          FMPY I AIJ                                               /LSQ1850
531  1504          FADD I AJK                                               /LSQ1851
532  6504          FPUT I AJK                                               /LSQ1852
533     0          FEXT                                                     /LSQ1853
534  1104  X18,    TAD AJK                                                  /LSQ1854
535  1154          TAD THR                                                  /LSQ1855
536  3104          DCA AJK                                                  /LSQ1856
537  1116          TAD QIK                                                  /LSQ1857
540  1154          TAD THR                                                  /LSQ1858
541  3116          DCA QIK                                                  /LSQ1859
542  2107  X19,    ISZ KP                                                   /LSQ1860
543  5326          JMP X17          /CONTINUE INNER LOOP                    /LSQ1861
544  1101  X20,    TAD AIJ                                                  /LSQ1862
545  1154          TAD THR                                                  /LSQ1863
546  3101          DCA AIJ                                                  /LSQ1864
547  1115          TAD QIJ                                                  /LSQ1865
550  1154          TAD THR                                                  /LSQ1866
551  3115          DCA QIJ                                                  /LSQ1867
552  2106  X21,    ISZ JP                                                   /LSQ1868
553  5322          JMP X16          /CONTINUE OUTER LOOP                    /LSQ1869
554  1105  X22,    TAD IP                                                   /LSQ1870
555  7041          CIA                                                      /LSQ1871
556  4772          JMS I LMP3                                               /LSQ1872
557  1100          TAD AII                                                  /LSQ1873
560  3100          DCA AII                                                  /LSQ1874
561  7240          CLA CMA                                                  /LSQ1875
562  1105          TAD IP                                                   /LSQ1876
563  7041          CIA                                                      /LSQ1877
564  4772          JMS I LMP3                                               /LSQ1878
565  1113          TAD LI                                                   /LSQ1879
566  3113          DCA LI                                                   /LSQ1880
567  2105  X23,    ISZ IP                                                   /LSQ1881
570  5201          JMP X2           /CONTINUE MAIN DIAGONALIZING LOOP.EXIT OCCU/LSQ1882
571   276  LINT,   INT                                                      /LSQ1883
572   754  LMP3,   MPY3                                                     /LSQ1884
573   363  LERR,   ERR                                                      /LSQ1885
574  3777  LGNG,   3777            /LARGE NEGATIVE NUMBER                  /LSQ1886
575  4000          4000                                                     /LSQ1887
576     1          0001                                                     /LSQ1888
577  1100  X24,    TAD AII          /START MAIN RESTORING LOOP              /LSQ1889
600  1362          TAD MSIX                                                 /LSQ1890
601  3100          DCA AII                                                  /LSQ1891
602  1363          TAD MNIN                                                 /LSQ1892
603  1113          TAD LI                                                   /LSQ1893
604  3113          DCA LI                                                   /LSQ1894
605  1114          TAD MN                                                   /LSQ1895
606  7001          IAC                                                      /LSQ1896
607  3110          DCA IS                                                   /LSQ1897
610  1110  X25,    TAD IS           /GO TO NORMAL RETURN IF MATRIX IS OF ORDER /LSQ1898
611  7650          SNA CLA                                                  /LSQ1899
612  5351          JMP X43                                                  /LSQ1900
613  1100  X26,    TAD AII          /START LOOP TO CLEAR ROW                /LSQ1901
614  1154          TAD THR                                                  /LSQ1902
615  3101          DCA AIJ                                                  /LSQ1903
616  1110          TAD IS                                                   /LSQ1904
617  7041          CIA                                                      /LSQ1905
```

```
620  1114          TAD MN                                          /LSQ1906
621  3106          DCA JP                                          /LSQ1907
622  1106          TAD JP                                          /LSQ1908
623  3112          DCA JPP                                         /LSQ1909
624  7240          CLA CMA                                         /LSQ1910
625  1106          TAD JP                                          /LSQ1911
626  3111          DCA JS                                          /LSQ1912
627  4407  X27,    JMS I LFPT                                      /LSQ1913
630  5764          FGET I LZERO                                    /LSQ1914
631  6501          FPUT I AIJ                                      /LSQ1915
632     0          FEXT                                            /LSQ1916
633  1101  X28,    TAD AIJ                                         /LSQ1917
634  1154          TAD THR                                         /LSQ1918
635  3101          DCA AIJ                                         /LSQ1919
636  2106  X29,    ISZ JP                                          /LSQ1920
637  5227          JMP X27          /CONTINUE LOOP TO CLEAR ROW    /LSQ1921
640  1111  X30,    TAD JS           /START OUTER RESTORING LOOP    /LSQ1922
641  7041          CIA                                             /LSQ1923
642  4354          JMS MPY3                                        /LSQ1924
643  1100          TAD AII                                         /LSQ1925
644  3104          DCA AJK                                         /LSQ1926
645  1113          TAD LI                                          /LSQ1927
646  1154          TAD THR                                         /LSQ1928
647  3115          DCA QIJ                                         /LSQ1929
650  1100          TAD AII                                         /LSQ1930
651  1154          TAD THR                                         /LSQ1931
652  3101          DCA AIJ                                         /LSQ1932
653  1115  X31,    TAD QIJ          /START INNER RESTORING LOOP    /LSQ1933
654  3116          DCA QIK                                         /LSQ1934
655  1101          TAD AIJ                                         /LSQ1935
656  3102          DCA AIK                                         /LSQ1936
657  1112          TAD JPP                                         /LSQ1937
660  3107          DCA KP                                          /LSQ1938
661  4407  X32,    JMS I LFPT                                      /LSQ1939
662  5515          FGET I QIJ                                      /LSQ1940
663  3504          FMPY I AJK                                      /LSQ1941
664  1502          FADD I AIK                                      /LSQ1942
665  6502          FPUT I AIK                                      /LSQ1943
666     0          FEXT                                            /LSQ1944
667  1112  X33,    TAD JPP                                         /LSQ1945
670  7041          CIA                                             /LSQ1946
671  1107          TAD KP                                          /LSQ1947
672  7650          SNA CLA                                         /LSQ1948
673  5302          JMP X35                                         /LSQ1949
674  4407  X34,    JMS I LFPT                                      /LSQ1950
675  5516          FGET I QIK                                      /LSQ1951
676  3504          FMPY I AJK                                      /LSQ1952
677  1501          FADD I AIJ                                      /LSQ1953
700  6501          FPUT I AIJ                                      /LSQ1954
701     0          FEXT                                            /LSQ1955
702  1104  X35,    TAD AJK                                         /LSQ1956
703  1154          TAD THR                                         /LSQ1957
704  3104          DCA AJK                                         /LSQ1958
705  1116          TAD QIK                                         /LSQ1959
706  1154          TAD THR                                         /LSQ1960
707  3116          DCA QIK                                         /LSQ1961
710  1102          TAD AIK                                         /LSQ1962
711  1154          TAD THR                                         /LSQ1963
712  3102          DCA AIK                                         /LSQ1964
713  2107  X36,    ISZ KP                                          /LSQ1965
714  5261          JMP X32          /CONTINUE INNER LOOP           /LSQ1966
715  4407  X37,    JMS I LFPT                                      /LSQ1967
716  5515          FGET I QIJ                                      /LSQ1968
717  3501          FMPY I AIJ                                      /LSQ1969
720  1500          FADD I AII                                      /LSQ1970
721  6500          FPUT I AII                                      /LSQ1971
722     0          FEXT                                            /LSQ1972
723  1115  X38,    TAD QIJ                                         /LSQ1973
724  1154          TAD THR                                         /LSQ1974
725  3115          DCA QIJ                                         /LSQ1975
726  1101          TAD AIJ                                         /LSQ1976
727  1154          TAD THR                                         /LSQ1977
730  3101          DCA AIJ                                         /LSQ1978
731  2112  X39,    ISZ JPP                                         /LSQ1979
732  5253          JMP X31          /CONTINUE OUTER LOOP           /LSQ1980
733  1111  X40,    TAD JS           /INTERCHANGE ROW-COLUMNS       /LSQ1981
734  4753          JMS I LLNT                                      /LSQ1982
735  7240  X41,    CLA CMA                                         /LSQ1983
736  1111          TAD JS                                          /LSQ1984
737  4354          JMS MPY3                                        /LSQ1985
740  1100          TAD AII                                         /LSQ1986
741  3100          DCA AII                                         /LSQ1987
742  1111          TAD JS                                          /LSQ1988
743  4354          JMS MPY3                                        /LSQ1989
```

```
 744  1362          TAD MSIX                                                  /LSQ1990
 745  1113          TAD LI                                                    /LSQ1991
 746  3113          DCA LI                                                    /LSQ1992
 747  2110  X42,    ISZ IS                                                    /LSQ1993
 750  5213          JMP X26              /CONTINUE MAIN RESTORING LOOP        /LSQ1994
 751  5752  X43,    JMP I LRET           /GO TO NORMAL RETURN                 /LSQ1995
 752   362  LRET,   RET                                                       /LSQ1996
 753   276  LLNT,   INT                                                       /LSQ1997
                                                                             /LSQ1998
 754     0  MPY3,   0                    /SUBROUTINE TO MULTIPLY BY THREE     /LSQ1999
 755  3122          DCA TEMP                                                  /LSQ2000
 756  1122          TAD TEMP                                                  /LSQ2001
 757  7104          CLL RAL                                                   /LSQ2002
 760  1122          TAD TEMP                                                  /LSQ2003
 761  5754          JMP I MPY3                                                /LSQ2004
 762  7772  MSIX,   -6                                                        /LSQ2005
 763  7767  MNIN,   -11                                                       /LSQ2006
 764  5107  LZERO,  ZERO                                                      /LSQ2007
                                                                             /LSQ2008
             /FORMAT OF OUTPUT TO BE 3 BEFORE AND 4 AFTER DECIMAL POINT      /LSQ2009
             *7462                                                           /LSQ2010
7462     3          3                                                        /LSQ2011
7463     4          4                                                        /LSQ2012


             /SUBROUTINE CONSTRAIN FOR CUBIC CRYSTAL, A2#A1, A3#A1.          /CON   1
             LFPT#7                                                          /CON   2
             A1#4122                                                         /CON   3
             *2213                                                           /CON   4
2213     0  CNSTRN, 0                                                        /CON   5
2214  4407          JMS I LFPT                                               /CON   6
2215  5622          FGET I LA1                                               /CON   7
2216  6623          FPUT I LA2                                               /CON   8
2217  6624          FPUT I LA3                                               /CON   9
2220     0          FEXT                                                     /CON  10
2221  5613          JMP I CNSTRN                                             /CON  11
2222  4122  LA1,    A1                                                       /CON  12
2223  4125  LA2,    A1+3                                                     /CON  13
2224  4130  LA3,    A1+6                                                     /CON  14


             /SUBROUTINE CONSTRAIN FOR TETRAGONAL OR HEXAGONAL CRYSTAL, A2#A1.  /CON  16
             A1#4122                                                         /CON  17
             LFPT#7                                                          /CON  18
             *2213                                                           /CON  19
2213     0  CNSTRN, 0                                                        /CON  20
2214  4407          JMS I LFPT                                               /CON  21
2215  5621          FGET I LA1                                               /CON  22
2216  6622          FPUT I LA2                                               /CON  23
2217     0          FEXT                                                     /CON  24
2220  5613          JMP I CNSTRN                                             /CON  25
2221  4122  LA1,    A1                                                       /CON  26
2222  4125  LA2,    A1+3                                                     /CON  27


             /SUBROUTINE CONSTRAIN FOR RHOMBOHEDRAL CRYSTAL,A2#A1,A3#A1,COS2#COS1,COS/CON  29
             LFPT#7                                                          /CON  30
             A1#4122                                                         /CON  31
             COS1#4133                                                       /CON  32
             *2213                                                           /CON  33
2213     0  CNSTRN, 0                                                        /CON  34
2214  4407          JMS I LFPT                                               /CON  35
2215  5625          FGET I LA1                                               /CON  36
2216  6626          FPUT I LA2                                               /CON  37
2217  6627          FPUT I LA3                                               /CON  38
2220  5630          FGET I LCOS1                                             /CON  39
2221  6631          FPUT I LCOS2                                             /CON  40
2222  6632          FPUT I LCOS3                                             /CON  41
2223     0          FEXT                                                     /CON  42
2224  5613          JMP I CNSTRN                                             /CON  43
2225  4122  LA1,    A1                                                       /CON  44
2226  4125  LA2,    A1+3                                                     /CON  45
2227  4130  LA3,    A1+6                                                     /CON  46
2230  4133  LCOS1,  COS1                                                     /CON  47
2231  4136  LCOS2,  COS1+3                                                   /CON  48
2232  4141  LCOS3,  COS1+6                                                   /CON  49


             /SUBROUTINE TO REMOVE CONSTRAINTS.                              /CON  51
             *2213                                                           /CON  52
2213     0  CNSTRN, 0                                                        /CON  53
2214  5613          JMP I CNSTRN                                             /CON  54
```

```
                /DATA COLLECTION PROGRAM                                  /DAT   1
                                                                          /DAT   2
                ONE#146                                                   /DAT   3
                RSTRT#3742                                                /DAT   4
                IBRK#3745                                                 /DAT   5
                MTHR#156                                                  /DAT   6
                CTHI#2671                                                 /DAT   7
                STCT#2703                                                 /DAT   8
                WTCT#2721                                                 /DAT   9
                CTERR#2670                                                /DAT  10
                AUDIO#2632                                                /DAT  11
                LWHERE#145                                                /DAT  12
                CREC#1146                                                 /DAT  13
                REC#2400                                                  /DAT  14
                LFNP#26                                                   /DAT  15
                LOMGA#66                                                  /DAT  16
                LFPT#7                                                    /DAT  17
                LTSIN#65                                                  /DAT  18
                LFNK#5                                                    /DAT  19
                LFIX#34                                                   /DAT  20
                ACCCNT#173                                                /DAT  21
                COUNT#170                                                 /DAT  22
                LCRLF#165                                                 /DAT  23
                LFOP#27                                                   /DAT  24
                LMOTOR#162                                                /DAT  25
                LWMOT#167                                                 /DAT  26
                LOPCH#70                                                  /DAT  27
                HORD#45                                                   /DAT  28
                MIT#1476                                                  /DAT  29
                MIO#1575                                                  /DAT  30
                DPIOUT#7505                                               /DAT  31
                ZERO#5107                                                 /DAT  32
                                                                          /DAT  33
                *144                                                      /DAT  34
144   2252      LPRNT,  PRINT                                             /DAT  35
                *161                                                      /DAT  36
161   3132      LCODE,  CODE                                              /DAT  37
                                                                          /DAT  38
                /AUDIO OUTPUT IN WAITING LOOP                             /DAT  39
                *210                                                      /DAT  40
210   4561      OMGA,   JMS I LCODE                                       /DAT  41
211   5670              5670                                              /DAT  42
212   5670              5670                                              /DAT  43
                                                                          /DAT  44
                /NO RATEMETER INDICATOR                                   /DAT  45
                *545                                                      /DAT  46
545   7000              NOP                                               /DAT  47
                                                                          /DAT  48
                *600                                                      /DAT  49
                /TN. TYPEWRITER ON                                        /DAT  50
600   7001      TYON,   IAC                                               /DAT  51
                /TF. TYPEWRITER OFF                                       /DAT  52
601   3360      TYOFF,  DCA TYPE                                          /DAT  53
602   5465              JMP I LTSIN                                       /DAT  54
                                                                          /DAT  55
                /CN. CHART ON                                             /DAT  56
603   7001      CHRTON, IAC                                               /DAT  57
                /CF. CHART OFF                                            /DAT  58
604   3361      CHRTOF, DCA CHART                                         /DAT  59
605   5465              JMP I LTSIN                                       /DAT  60
                                                                          /DAT  61
606      0      DTCST,  0                                                 /DAT  62
607      0              0                                                 /DAT  63
610      0              0                                                 /DAT  64
611   7777      FOURTH, 7777                                              /DAT  65
612   2000              2000                                              /DAT  66
613      0              0000                                              /DAT  67
614      0      TMPY,   0                                                 /DAT  68
615      0              0                                                 /DAT  69
616      0              0                                                 /DAT  70
                TTH#624                                                   /DAT  71
                OMG#TTH+3                                                 /DAT  72
                CHI#OMG+3                                                 /DAT  73
                PHI#CHI+3                                                 /DAT  74
                *640                                                      /DAT  75
640      0      DTTH,   0                                                 /DAT  76
641      0              0                                                 /DAT  77
642      0              0                                                 /DAT  78
                /DATA COLLECTION SUBROUTINE                               /DAT  79
643      0      DCOLL,  0                                                 /DAT  80
644   1356              TAD NSTP                                          /DAT  81
```

```
645  7040          CMA                  /SET COUNTER OF STEPS FOR SCAN # -NSTP-1.  /DAT  82
646  3357          DCA KDC                                                         /DAT  83
647  4407          JMS I LFPT           /CLEAR FLOATING POINT ACCUMULATED COUNT TO /DAT  84
650  5765          FGET I AZERO                                                    /DAT  85
651  6173          FPUT ACCCNT                                                     /DAT  86
652     0          FEXT                                                            /DAT  87
653  7040          CMA                  /WORD COUNTER # -1.                        /DAT  88
654  3362          DCA WDK                                                         /DAT  89
655  1360          TAD TYPE                                                        /DAT  90
656  7650          SNA CLA                                                         /DAT  91
657  5265          JMP RATE                                                        /DAT  92
660  1643          TAD I DCOLL                                                     /DAT  93
661  3264          DCA IDENT                                                       /DAT  94
662  4565          JMS I LCRLF                                                     /DAT  95
663  4544          JMS I LPRNT                                                     /DAT  96
664     0  IDENT,  0                                                               /DAT  97
665  2243  RATE,   ISZ DCOLL                                                       /DAT  98
666  4766  RATE1,  JMS I LSTCT          /START COUNT.                              /DAT  99
667     0  RTMC,   0                                                               /DAT 100
670  4545          JMS I LWHERE         /SET FLOATING POINT ANGLES TO PRESENT POSIT/DAT 101
671  4767          JMS I LWTCT          /WAIT FOR COUNT TO BE COMPLETED.           /DAT 102
672   170          COUNT                /     RETURN WITH FLOATING POINT COUNT.    /DAT 103
673  7000          NOP                  /     ERROR RETURN.                        /DAT 104
674  1360  RATE2,  TAD TYPE             /     NORMAL RETURN. TEST TYPE INDICATOR.  /DAT 105
675  7650          SNA CLA                                                         /DAT 106
676  5317          JMP RATE4            /DO NOT TYPE.                              /DAT 107
677  2362          ISZ WDK              /TEST WORD COUNTER                         /DAT 108
700  5312          JMP RATE3                                                       /DAT 109
701  1363          TAD WDKK             /RESET WORD COUNTER                        /DAT 110
702  3362          DCA WDK                                                         /DAT 111
703  4565          JMS I LCRLF          /PUT OUT CR-LF.                            /DAT 112
704  1311          TAD SCAN             /IS IT STEP SCANNING.                      /DAT 113
705  7650          SNA CLA                                                         /DAT 114
706  5312          JMP RATE3            /NO.                                       /DAT 115
707  4427          JMS I LFOP           /YES. PRINT ANGLE LAST SET TO SCAN.        /DAT 116
710  7777          -1                                                              /DAT 117
711     0  SCAN,   0                                                               /DAT 118
712  1770  RATE3,  TAD I LCTER          /TEST FOR COUNT ERROR.                     /DAT 119
713  7640          SZA CLA                                                         /DAT 120
714  5353          JMP RATE6            /ERROR.                                    /DAT 121
715  4771          JMS I LDPIOT         /NO ERROR. PRINT COUNT.                    /DAT 122
716  2671          CTHI                                                            /DAT 123
717  4407  RATE4,  JMS I LFPT           /ADD STEPS TO ANGLES.                      /DAT 124
720  5224          FGET TTH                                                        /DAT 125
721  1240          FADD DTTH                                                       /DAT 126
722  6224          FPUT TTH                                                        /DAT 127
723     0          FEXT                                                            /DAT 128
724  4562          JMS I LMOTOR         /STEP 2THETA.                              /DAT 129
725  1476          MIT                                                             /DAT 130
726  1361          TAD CHART            /TEST CHART INDICATOR.                     /DAT 131
727  7650          SNA CLA                                                         /DAT 132
730  5334          JMP RATE5            /DO NOT CHART.                             /DAT 133
731  1770          TAD I LCTER          /TEST ERROR INDICATOR.                     /DAT 134
732  7650          SNA CLA              /IF ERROR, DO NOT CHART.                   /DAT 135
733  4772          JMS I LREC           /CHART COUNT.                              /DAT 136
734  4567  RATE5,  JMS I LWMOT          /WAIT FOR MOTOR TO STOP.                   /DAT 137
735  4407          JMS I LFPT           /DATA COLLECTION. ADD COUNT TO ACCUMULATED /DAT 138
736  5206          FGET DTCST                                                      /DAT 139
737  3170          FMPY COUNT                                                      /DAT 140
740     6          FNEG                                                            /DAT 141
741  1211          FADD FOURTH                                                     /DAT 142
742  6214          FPUT TMPY                                                       /DAT 143
743  5170          FGET COUNT                                                      /DAT 144
744  4214          FDIV TMPY                                                       /DAT 145
745  1173          FADD ACCCNT                                                     /DAT 146
746  6173          FPUT ACCCNT                                                     /DAT 147
747     0          FEXT                                                            /DAT 148
750  2357          ISZ KDC              /TEST COUNTER OF NUMBER OF STEPS.          /DAT 149
751  5266          JMP RATE1            /RETURN FOR NEXT COUNT.                    /DAT 150
752  5643          JMP I DCOLL          /STEPS AND COUNTS COMPLETED. RETURN FROM SU/DAT 151
753  1364  RATE6,  TAD ASTK                                                        /DAT 152
754  4470          JMS I LOPCH                                                     /DAT 153
755  5317          JMP RATE4                                                       /DAT 154
756     0  NSTP,   0                                                               /DAT 155
757     0  KDC,    0                                                               /DAT 156
760     0  TYPE,   0                                                               /DAT 157
761     0  CHART,  0                                                               /DAT 158
762     0  WDK,    0                                                               /DAT 159
763  7766  WDKK,   -12                                                             /DAT 160
764   252  ASTK,   252                                                             /DAT 161
765  5107  AZERO,  ZERO                                                            /DAT 162
```

```
 766  2703  LSTCT,  STCT                                                  /DAT 163
 767  2721  LWTCT,  WTCT                                                  /DAT 164
 770  2670  LCTER,  CTERR                                                 /DAT 165
 771  7505  LDPIOT, DPIOUT                                                /DAT 166
 772  2400  LREC,   REC                                                   /DAT 167
                                                                          /DAT 168
             *1344                                                        /DAT 169
             /ST. SET UP 2THETA SCAN                                      /DAT 170
1344  1362  TSCAN,  TAD ATTH                                             /DAT 171
1345  3760          DCA I LSCAN                                           /DAT 172
1346  4426          JMS I LFNP                                            /DAT 173
1347  7777          -1                                                    /DAT 174
1350   640  LDTTH,  DTTH                                                 /DAT 175
1351  5466          JMP I LOMGA                                           /DAT 176
                                                                          /DAT 177
             /CS. SET FOR NO SCAN                                         /DAT 178
1352  4407  NOSCAN, JMS I LFPT                                            /DAT 179
1353  5761          FGET I LZERO                                          /DAT 180
1354  6750          FPUT I LDTTH                                          /DAT 181
1355     0          FEXT                                                  /DAT 182
1356  3760          DCA I LSCAN                                           /DAT 183
1357  5466          JMP I LOMGA                                           /DAT 184
1360   711  LSCAN,  SCAN                                                 /DAT 185
1361  5107  LZERO,  ZERO                                                 /DAT 186
1362   624  ATTH,   TTH                                                  /DAT 187
                                                                          /DAT 188
             *2115                                                        /DAT 189
             /KEYBOARD SIGNAL TABLE                                       /DAT 190
2115  7771  NINT,   -7                                                   /DAT 191
2116  7742  NLIST,  -36                                                  /DAT 192
             *2145                                                        /DAT 193
2145  2416          2416                /TN. RATEMETER TYPEWRITER ON.    /DAT 194
2146   600          TYON                                                 /DAT 195
2147  2406          2406                /TF. RATEMETER TYPEWRITER OFF.   /DAT 196
2150   601          TYOFF                                                /DAT 197
2151   316          0316                /CN. RATEMETER CHART RECORDER ON. /DAT 198
2152   603          CHRTON                                               /DAT 199
2153   306          0306                /CF. RATEMETER CHART RECORDER OFF. /DAT 200
2154   604          CHRTOF                                               /DAT 201
2155  1523          1523                /MS. MEASURE STANDARDS AFTER CURRENT REFLEC/DAT 202
2156  2751          INSSTD                                               /DAT 203
2157  1104          1104                /ID. INTERRUPT DATA COLLECTION AFTER CURREN/DAT 204
2160  2755          STOP                                                 /DAT 205
             *2207                                                        /DAT 206
             CD1#3100                                                     /DAT 207
             CD2#3200                                                     /DAT 208
             INDTCL#4000                                                  /DAT 209
             SSTD#4200                                                    /DAT 210
             WAVE#4117                                                    /DAT 211
             PRSCAL#4107                                                  /DAT 212
2207   424          0424                /DT. DRIVE 2THETA                /DAT 213
2210  2272          SETTHT                                               /DAT 214
2211   417          0417                /DO. DRIVE OMEGA                 /DAT 215
2212  2300          SETOMG                                               /DAT 216
2213  2324          2324                /ST. READ STEP SIZE FOR 2THETA SCAN. /DAT 217
2214  1344          TSCAN                                                /DAT 218
2215   323          0323                /CS. CLEAR ALL STEPS TO ZERO.    /DAT 219
2216  1352          NOSCAN                                               /DAT 220
2217  2023          2023                /PS. PRINT SCALE OF CHART RECORDER. /DAT 221
2220  4107          PRSCAL                                               /DAT 222
2221  1122          1122                /IR. COLLECT DATA FOR INDIVIDUAL REFLECTION/DAT 223
2222  3100          CD1                                                  /DAT 224
2223   304          0304                /CD. COLLECT DATA IN SPECIFIED RANGE /DAT 225
2224  3200          CD2                                                  /DAT 226
2225  2304          2304                /SD. SET UP DATA COLLECTION.     /DAT 227
2226  4000          INDTCL                                               /DAT 228
2227  2204          2204                /RD. RESTART DATA COLLECTION AFTER INTERRUP/DAT 229
2230  3742          RSTRT                                                /DAT 230
2231  1123          1123                /IS. INPUT STANDARD REFLECTIONS. /DAT 231
2232  4200          SSTD                                                 /DAT 232
2233  2701          2701                /WA. READ WAVELENGTH AND CELL EDGES /DAT 233
2234  4117          WAVE                                                 /DAT 234
2235  1116          1116                /IN. INITIALIZE NUMBER OF REFLECTIONS MEASU/DAT 235
2236  2760          INITN                                                /DAT 236
                                                                          /DAT 237
             /SUBROUTINE TO PUT OUT LEADER                                /DAT 238
2237     0  LEAD,   0                                                    /DAT 239
2240  1247          TAD CLEAD                                            /DAT 240
2241  3250          DCA KLEAD                                            /DAT 241
2242  1251  LEAD1,  TAD LEADER                                           /DAT 242
2243  4470          JMS I LOPCH                                          /DAT 243
```

```
2244  2250          ISZ KLEAD                                          /DAT 244
2245  5242          JMP LEADI                                          /DAT 245
2246  5637          JMP I LEAD                                         /DAT 246
2247  7754  CLEAD,  -24                                                /DAT 247
2250     0  KLEAD,  0                                                  /DAT 248
2251   200  LEADER, 0200                                               /DAT 249
                                                                       /DAT 250
            /OUTPUT TWO CHARACTERS                                     /DAT 251
            TY2#7544                                                   /DAT 252
2252     0  PRINT,  0                                                  /DAT 253
2253  1652          TAD I PRINT                                        /DAT 254
2254  4657          JMS I LTY2                                         /DAT 255
2255  2252          ISZ PRINT                                          /DAT 256
2256  5652          JMP I PRINT                                        /DAT 257
2257  7544  LTY2,   TY2                                                /DAT 258
                                                                       /DAT 259
            *2272                                                      /DAT 260
            /DT. READ ANGLE AND DRIVE 2THETA TO IT                     /DAT 261
2272  4426  SETTHT, JMS I LFNP                                         /DAT 262
2273  7777          -1                                                 /DAT 263
2274   624  LTTH,   TTH                                                /DAT 264
2275  4562          JMS I LMOTOR                                       /DAT 265
2276  1476          MIT                                                /DAT 266
2277  5466          JMP I LOMGA                                        /DAT 267
                                                                       /DAT 268
            /DO. READ ANGLE AND DRIVE OMEGA TO IT                      /DAT 269
2300  4426  SETOMG, JMS I LFNP                                         /DAT 270
2301  7777          -1                                                 /DAT 271
2302   627          OMG                                                /DAT 272
2303  4562          JMS I LMOTOR                                       /DAT 273
2304  1575          MIO                                                /DAT 274
2305  5466          JMP I LOMGA                                        /DAT 275
                                                                       /DAT 276
            *2662                                                      /DAT 277
            /PART OF TENTH SECOND INTERRUPT, WAIT FOR SHUTTER TO OPEN  /DAT 278
2662  5371          JMP SWAIT                                          /DAT 279
            *2674                                                      /DAT 280
2674  3144  LAUD,   AUD                                                /DAT 281
                                                                       /DAT 282
            *2751                                                      /DAT 283
            /MS. MEASURE STANDARDS AFTER CURRENT REFLECTION            /DAT 284
            KSTD#4236                                                  /DAT 285
2751  7040  INSSTD, CMA                                                /DAT 286
2752  3754          DCA I LKSTD          /SET KSTD #-1.                /DAT 287
2753  5465          JMP I LTSIN                                        /DAT 288
2754  4236  LKSTD,  KSTD                                               /DAT 289
                                                                       /DAT 290
            /ID. INTERRUPT DATA COLLECTION AFTER CURRENT REFLECTION    /DAT 291
2755  2757  STOP,   ISZ I LIBRK                                        /DAT 292
2756  5465          JMP I LTSIN                                        /DAT 293
2757  3745  LIBRK,  IBRK                                               /DAT 294
                                                                       /DAT 295
            /IN. INITIALIZE COUNTER OF NUMBER OF REFLECTIONS MEASURED  /DAT 296
2760  4405  INITN,  JMS I LFNK          /READ NUMBER FOR FIRST REFLECTION TO BE MEA/DAT 297
2761  4407          JMS I LFPT          /STORE THE NUMBER MINUS ONE    /DAT 298
2762  2146          FSUB ONE                                           /DAT 299
2763  6366          FPUT NREFL                                         /DAT 300
2764     0          FEXT                                               /DAT 301
2765  5466          JMP I LOMGA                                        /DAT 302
2766     0  NREFL,  0                                                  /DAT 303
2767     0          0                                                  /DAT 304
2770     0          0                                                  /DAT 305
                                                                       /DAT 306
            /WAIT .5 SECONDS AFTER SIGNAL TO OPEN SHUTTER              /DAT 307
2771  1376  SWAIT,  TAD SHUTK                                          /DAT 308
2772  7640          SZA CLA                                            /DAT 309
2773  2376          ISZ SHUTK                                          /DAT 310
2774  5674          JMP I LAUD          /AUDIO OUTPUT AND TERMINATION OF INTERRUPT /DAT 311
2775  5674          JMP I LAUD                                         /DAT 312
2776     0  SHUTK,  0                                                  /DAT 313
                                                                       /DAT 314
            *3132                                                      /DAT 315
            /SUBROUTINE TO SET UP AUDIO OUTPUT                         /DAT 316
3132     0  CODE,   0                                                  /DAT 317
3133  1732          TAD I CODE          /GET CODE WORDS                /DAT 318
3134  6002          IOF                                                /DAT 319
3135  3370          DCA CODEA                                          /DAT 320
3136  2332          ISZ CODE                                           /DAT 321
3137  1732          TAD I CODE                                         /DAT 322
3140  3371          DCA CODEB                                          /DAT 323
3141  6001          ION                                                /DAT 324
```

```
3142  2332          ISZ CODE              /RETURN                                  /DAT 325
3143  5732          JMP I CODE                                                     /DAT 326
                                                                                   /DAT 327
            /CONTROL AUDIO OUTPUT, ENTERED FROM TENTH SECOND INTERRUPT             /DAT 328
3144  2367  AUD,     ISZ AUDK              /TEST COUNTER                            /DAT 329
3145  5465          JMP I LTSIN           /BYPASS                                  /DAT 330
3146  1156          TAD MTHR              /RESET COUNTER                           /DAT 331
3147  3367          DCA AUDK                                                       /DAT 332
3150  1371          TAD CODEB             /ROTATE CODE WORDS LEFT                  /DAT 333
3151  7104          CLL RAL                                                        /DAT 334
3152  3371          DCA CODEB                                                      /DAT 335
3153  1370          TAD CODEA                                                      /DAT 336
3154  7004          RAL                                                            /DAT 337
3155  3370          DCA CODEA                                                      /DAT 338
3156  7430          SZL                                                            /DAT 339
3157  2371          ISZ CODEB                                                      /DAT 340
3160  1365          TAD NOPC              /GET NOP COMMAND                         /DAT 341
3161  7430          SZL                   /TEST CODE BIT                           /DAT 342
3162  1366          TAD AUDC              /CONVERT TO AUDIO COMMAND                /DAT 343
3163  3772          DCA I LADIO           /SET COMMAND                             /DAT 344
3164  5465          JMP I LTSIN           /TERMINATE INTERRUPT                     /DAT 345
3165  7000  NOPC,    NOP                   /NOP COMMAND                             /DAT 346
3166  7314  AUDC,    6314-NOP              /AUDIO COMMAND                           /DAT 347
3167  7775  AUDK,    -3                    /AUDIO COUNTER                           /DAT 348
3170     0  CODEA,   0                     /CODE WORDS                              /DAT 349
3171     0  CODEB,   0                                                             /DAT 350
3172  2632  LADIO,   AUDIO                                                         /DAT 351
                                                                                   /DAT 352
            /SET FORMAT OF OUTPUT TO XXXX.XXX                                      /DAT 353
            *7462                                                                  /DAT 354
7462     4          4                                                              /DAT 355
7463     3          3                                                              /DAT 356


            *3100                                                                  /DAT 358
            /IR. COLLECT DATA FOR INDIVIDUAL REFLECTIONS                           /DAT 359
                                                                                   /DAT 360
            IND#100                                                                /DAT 361
            TEMP#101                                                               /DAT 362
            LIPCH#67                                                               /DAT 363
            LOPCH#70                                                               /DAT 364
            LPRNT#144                                                              /DAT 365
            LSTD#37                                                                /DAT 366
            LRNG#74                                                                /DAT 367
            FH#4454                                                                /DAT 368
            LDAT#36                                                                /DAT 369
            LFNP#26                                                                /DAT 370
            LFIX#34                                                                /DAT 371
            LANG#35                                                                /DAT 372
            LOMGA#66                                                               /DAT 373
                                                                                   /DAT 374
3100  3330  CD1,   DCA          LAST     /SET LAST TO ZERO                        /DAT 375
3101  7001         IAC                   /SET FRST TO ONE                         /DAT 376
3102  3327         DCA          FIRST                                             /DAT 377
3103  4437  CD11,  JMS   I      LSTD     /JUMP TO SUBROUTINE TO INSERT STANDARDS  /DAT 378
3104  7240  CD12,  CLA CMA                /IND # -1                                /DAT 379
3105  3100         DCA          IND                                               /DAT 380
3106  4467  CD13,  JMS   I      LIPCH    /READ AND MIRROR CHARACTER               /DAT 381
3107  3101         DCA          TEMP                                              /DAT 382
3110  1101         TAD          TEMP                                              /DAT 383
3111  4470         JMS   I      LOPCH                                             /DAT 384
3112  1101         TAD          TEMP     /IS IT A LINE FEED                       /DAT 385
3113  1331         TAD          MINLF                                             /DAT 386
3114  7640         SZA CLA                                                        /DAT 387
3115  5373         JMP          ERR      /NO                                      /DAT 388
3116  4426         JMS   I      LFNP     /YES. READ INDICES                       /DAT 389
3117  7775         -3                                                             /DAT 390
3120  4454         FH                                                             /DAT 391
3121  4435         JMS   I  Z   LANG     /JUMP TO ANGLE CALCULATION               /DAT 392
3122  4474         JMS   I      LRNG     /TEST ANGLES                             /DAT 393
3123  5304         JMP          CD12     /JUMP IF OUT OF RANGE                    /DAT 394
3124  4436         JMS   I      LDAT     /JMP IF NOT OUT OF RANGE                 /DAT 395
3125  3327         DCA          FIRST    /SET FRST TO ZERO                        /DAT 396
3126  5303         JMP          CD11                                              /DAT 397
3127     0  FIRST,0                                                              /DAT 398
3130     0  LAST, 0                                                              /DAT 399
3131  7566  MINLF,-212                                                           /DAT 400
            *3173                                                                  /DAT 401
3173  2100  ERR,   ISZ          IND      /TEST IND                                /DAT 402
3174  5306         JMP          CD13                                              /DAT 403
```

```
3175  4544        JMS   I     LPRNT   /IF -1, PRINT INDICATOR OF ERROR          /DAT 404
3176  4305        4305                                                          /DAT 405
3177  5306        JMP CD13                                                      /DAT 406
                                                                                /DAT 407


                                                                                /DAT 409
            /CD. COLLECT DATA IN SPECIFIED RANGE                                /DAT 410
                                                                                /DAT 411
            LFXH#3032                                                           /DAT 412
            LINTIN#73                                                           /DAT 413
            MB11#7600                                                           /DAT 414
            FIRST#3127                                                          /DAT 415
            LAST#3130                                                           /DAT 416
            WVL#4125                                                            /DAT 417
            AI#4130                                                             /DAT 418
            KSTD#4236                                                           /DAT 419
            LMV#0025                                                            /DAT 420
            FH#4454                                                             /DAT 421
            LSTD#0037                                                           /DAT 422
            LPUT#0076                                                           /DAT 423
            LANG#0035                                                           /DAT 424
            LRNG#0074                                                           /DAT 425
            LDAT#0036                                                           /DAT 426
            LGET#0075                                                           /DAT 427
            LFNP#0026                                                           /DAT 428
            LFPT#0007                                                           /DAT 429
            TWO#0151                                                            /DAT 430
            MTHR#0156                                                           /DAT 431
            LFIX#0034                                                           /DAT 432
            THR#0154                                                            /DAT 433
            LVV#0072                                                            /DAT 434
            LFLT#0071                                                           /DAT 435
            LOMGA#66                                                            /DAT 436
                                                                                /DAT 437
            *0100                                                               /DAT 438
 100      0 LFST,0                                                             /DAT 439
 101      0 LWVL,LLST,0                                                        /DAT 440
 102      0 LAI,0                                                              /DAT 441
 103      0 LHMX,H,0                                                           /DAT 442
 104      0 LHMI,K,0                                                           /DAT 443
 105      0 TTMX,QMAX,VECT,L,0                                                 /DAT 444
 106      0 DK,0                                                               /DAT 445
 107      0 DL,0                                                               /DAT 446
 110      0 TTMN,QMIN,INT,KLIM,0                                               /DAT 447
 111      0 LLIM,0                                                             /DAT 448
 112      0 KALT,0                                                             /DAT 449
 113      0 LA,LALT,0                                                          /DAT 450
 114      0 LHM,HMAX,0                                                         /DAT 451
 115      0 LFHK,HMIN,0                                                        /DAT 452
 116      0 QQMX,KMAX,0                                                        /DAT 453
 117      0 KMIN,0                                                             /DAT 454
 120      0 LMAX,0                                                             /DAT 455
 121      0 QQMN,LMIN,0                                                        /DAT 456
 122      0 CHNG,0                                                             /DAT 457
 123      0 0                                                                  /DAT 458
 124      0 CD2K,0                                                             /DAT 459
 125      0 QQ,0                                                               /DAT 460
            *3000                                                               /DAT 461
3000   7753 BLKA, 0-25                                                          /DAT 462
3001   3127       FIRST                                                         /DAT 463
3002   4125       WVL                                                           /DAT 464
3003   4130       AI                                                            /DAT 465
3004   3043       3043                                                          /DAT 466
3005   3031       3031                                                          /DAT 467
            *3026                                                               /DAT 468
3026   7753 BLKB, 0-25                                                          /DAT 469
3027   3127       FIRST                                                         /DAT 470
3030   3130       LAST                                                          /DAT 471
                                                                                /DAT 472
            *3200                                                               /DAT 473
3200   4475 CD2,  JMS   I     LGET                                             /DAT 474
3201   3000       BLKA                                                          /DAT 475
3202   4426       JMS   I     LFNP    /READ 2THETA MAX AND MIN                  /DAT 476
3203   7776       0-2                                                           /DAT 477
3204    105       TTMX                                                          /DAT 478
3205   4407       JMS   I     LFPT    /COMPUTE QQMX AND QQMN                    /DAT 479
3206   5105       FGET        TTMX                                              /DAT 480
3207   4151       FDIV        TWO                                               /DAT 481
3210      3       FSIN                                                          /DAT 482
```

```
3211  3151        FMPY        TWO                                          /DAT 483
3212  4501        FDIV  I     LWVL                                         /DAT 484
3213  6105        FPUT        QMAX     /STORE QMAX                         /DAT 485
3214  3105        FMPY        QMAX                                         /DAT 486
3215  6116        FPUT        QQMX     /STORE QQMX                         /DAT 487
3216  5110        FGET        TTMN                                         /DAT 488
3217  4151        FDIV        TWO                                          /DAT 489
3220     3        FSIN                                                     /DAT 490
3221  3151        FMPY        TWO                                          /DAT 491
3222  4501        FDIV  I     LWVL                                         /DAT 492
3223  6110        FPUT        QMIN     /STORE QMIN                         /DAT 493
3224  3110        FMPY        QMIN                                         /DAT 494
3225  6121        FPUT        QQMN     /STORE QQMN                         /DAT 495
3226     0        FEXT                                                     /DAT 496
3227  1102        TAD         LA1      /SET ADDRESSES                      /DAT 497
3230  3113        DCA         LA                                           /DAT 498
3231  1103        TAD         LHMX                                         /DAT 499
3232  3114        DCA         LHM                                          /DAT 500
3233  1156        TAD         MTHR     /SET COUNTER                        /DAT 501
3234  3124        DCA         CD2K                                         /DAT 502
3235  4407  CD21, JMS   I     LFPT     /COMPUTE HMAX, HMIN,                /DAT 503
3236  5105        FGET        QMAX     /KMAX, KMIN, LMAX, LMIN             /DAT 504
3237  3513        FMPY  I     LA                                           /DAT 505
3240     0        FEXT                                                     /DAT 506
3241  4434        JMS   I     LFIX     /TRUNCATE COMPUTED MAX              /DAT 507
3242  3514        DCA   I     LHM      /STORE COMPUTED MAX                 /DAT 508
3243  1514        TAD   I     LHM      /PUT MAX IN AC                      /DAT 509
3244  2114        ISZ         LHM      /ADVANCE ADDRESS                    /DAT 510
3245  7041        CIA                                                      /DAT 511
3246  3514        DCA   I     LHM      /STORE MIN#-MAX                     /DAT 512
3247  2114        ISZ         LHM      /ADVANCE ADDRESSES                  /DAT 513
3250  1154        TAD         THR                                          /DAT 514
3251  1113        TAD         LA                                           /DAT 515
3252  3113        DCA         LA                                           /DAT 516
3253  2124        ISZ         CD2K     /TEST COUNTER                       /DAT 517
3254  5235        JMP         CD21                                         /DAT 518
3255  1156        TAD         MTHR     /SET COUNTER FOR LOOP               /DAT 519
3256  3124        DCA         CD2K     /WHICH NARROWS RANGE OF             /DAT 520
3257  1103        TAD         LHMX     /INDICES IF DESIRED.                /DAT 521
3260  3114        DCA         LHM                                          /DAT 522
3261  4473  CD22, JMS   I     LINTIN   /READ INTEGER INTO AC               /DAT 523
3262  3110        DCA         INT      /COMPARE TO MAX, (MAX-INT)          /DAT 524
3263  1110        TAD         INT                                          /DAT 525
3264  7041        CIA                                                      /DAT 526
3265  1514        TAD   I     LHM                                          /DAT 527
3266  7710        SPA   CLA            /SET MAX TO MIN OF INTEGER          /DAT 528
3267  5272        JMP         CD23     /READ AND COMPUTED MAX.             /DAT 529
3270  1110        TAD         INT                                          /DAT 530
3271  3514        DCA   I     LHM                                          /DAT 531
3272  2114  CD23, ISZ         LHM      /ADVANCE TO ADDRESS OF MIN          /DAT 532
3273  4473        JMS   I     LINTIN   /READ INTEGER                       /DAT 533
3274  3110        DCA         INT      /COMPARE TO MIN, (MIN-INT)          /DAT 534
3275  1110        TAD         INT                                          /DAT 535
3276  7041        CIA                                                      /DAT 536
3277  1514        TAD   I     LHM                                          /DAT 537
3300  7700        SMA   CLA            /SET MIN TO MAX OF THE              /DAT 538
3301  5304        JMP         CD24     /INTEGER AND THE COMPUTED MIN       /DAT 539
3302  1110        TAD         INT                                          /DAT 540
3303  3514        DCA   I     LHM                                          /DAT 541
3304  2114  CD24, ISZ         LHM      /ADVANCE ADDRESS                    /DAT 542
3305  2124        ISZ         CD2K     /TEST COUNTER                       /DAT 543
3306  5261        JMP         CD22                                         /DAT 544
3307  4475        JMS   I     LGET                                         /DAT 545
3310  3026        BLKB                                                     /DAT 546
3311  7001        IAC                  /TENTATIVELY SET DK, DL, KLIM, KALT, LLIM, LAL/DAT 547
3312  3106        DCA         DK                                           /DAT 548
3313  7001        IAC                                                      /DAT 549
3314  3107        DCA         DL                                           /DAT 550
3315  1116        TAD         KMAX                                         /DAT 551
3316  3110        DCA         KLIM                                         /DAT 552
3317  1120        TAD         LMAX                                         /DAT 553
3320  3111        DCA         LLIM                                         /DAT 554
3321  1117        TAD         KMIN                                         /DAT 555
3322  3112        DCA         KALT                                         /DAT 556
3323  1121        TAD         LMIN                                         /DAT 557
3324  3113        DCA         LALT                                         /DAT 558
3325  4473        JMS   I     LINTIN   /READ RESTART INDICATOR             /DAT 559
3326  7650        SNA   CLA            /SKIP IF RESTART                    /DAT 560
3327  5367        JMP         CD25     /JUMP IF NOT RESTART                /DAT 561
3330  4473        JMS   I     LINTIN   /FOR RESTART, READ IN H,K,L.        /DAT 562
3331  3103        DCA         H                                            /DAT 563
```

```
3332  4473        JMS   I     LINTIN                                        /DAT 564
3333  3104        DCA         K                                             /DAT 565
3334  4473        JMS   I     LINTIN                                        /DAT 566
3335  3105        DCA         L                                             /DAT 567
3336  1103        TAD         H        /TEST H+HMIN FOR EVEN OR ODD         /DAT 568
3337  1115        TAD         HMIN                                          /DAT 569
3340  7110        CLL   RAR                                                 /DAT 570
3341  7620        SNL   CLA              /SKIP IF ODD                       /DAT 571
3342  5351        JMP         CD2A     /IF EVEN, TENTATIVE DK,KLIM,KALT OK  /DAT 572
3343  7240        CLA   CMA              /IF ODD, RESET DK,KLIM,KALT        /DAT 573
3344  3106        DCA         DK                                            /DAT 574
3345  1116        TAD         KMAX                                          /DAT 575
3346  3112        DCA         KALT                                          /DAT 576
3347  1117        TAD         KMIN                                          /DAT 577
3350  3110        DCA         KLIM                                          /DAT 578
3351  1103  CD2A, TAD         H        /TEST H+HMIN+K+KMIN FOR EVEN OR      /DAT 579
3352  1115        TAD         HMIN     /ODD                                 /DAT 580
3353  1104        TAD         K                                             /DAT 581
3354  1117        TAD         KMIN                                          /DAT 582
3355  7110        CLL   RAR                                                 /DAT 583
3356  7620        SNL   CLA              /SKIP IF ODD                       /DAT 584
3357  5375        JMP         CD20     /IF EVEN TENTATIVE DL,LLIM,LALT OK   /DAT 585
3360  7040        CMA                  /IF ODD, RESET DL,LLIM,LALT          /DAT 586
3361  3107        DCA         DL                                            /DAT 587
3362  1121        TAD         LMIN                                          /DAT 588
3363  3111        DCA         LLIM                                          /DAT 589
3364  1120        TAD         LMAX                                          /DAT 590
3365  3113        DCA         LALT                                          /DAT 591
3366  5375        JMP         CD20                                          /DAT 592
3367  1115  CD25, TAD         HMIN     /SETTINGS FOR NCT RESTART            /DAT 593
3370  3103        DCA         H                                             /DAT 594
3371  1117        TAD         KMIN                                          /DAT 595
3372  3104        DCA         K                                             /DAT 596
3373  1121        TAD         LMIN                                          /DAT 597
3374  3105        DCA         L                                             /DAT 598
3375  7001  CD20, IAC                                                       /DAT 599
3376  3500        DCA   I     LFST                                          /DAT 600
3377  3501        DCA   I     LLST                                          /DAT 601
3400  4354  CD26, JMS         REJ                                           /DAT 602
3401  5243        JMP         CD27     /REJECT RETURN                       /DAT 603
3402  4475        JMS   I     LGET     /ACCEPT RETURN                       /DAT 604
3403  3000        BLKA                                                      /DAT 605
3404  4327        JMS         FLINDX   /FLOAT INDICES                       /DAT 606
3405  3031        LFXH-1                                                    /DAT 607
3406  4425        JMS   I     LMV      /COMPUTE PLANE NORMAL                /DAT 608
3407  7600        MB11                 /IN ORIENTER SYSTEM                  /DAT 609
3410  4454  LFH,   FH                   /CONSTANT                            /DAT 610
3411   105        VECT                                                      /DAT 611
3412  4472        JMS   I     LVV      /COMPUTE LENGTH SQUARED              /DAT 612
3413   105        VECT                                                      /DAT 613
3414   105        VECT                                                      /DAT 614
3415   125        QQ                                                        /DAT 615
3416  4407        JMS   I     LFPT     /TEST TO SEE IF IN RANGE             /DAT 616
3417  5125        FGET        QQ                                            /DAT 617
3420  2121        FSUB        QQMN                                          /DAT 618
3421     0        FEXT                                                      /DAT 619
3422  1045        TAD         45                                            /DAT 620
3423  7710        SPA   CLA                                                 /DAT 621
3424  5243        JMP         CD27     /JUMP IF OUT OF RANGE                /DAT 622
3425  4407        JMS   I     LFPT                                          /DAT 623
3426  5116        FGET        QQMX                                          /DAT 624
3427  2125        FSUB        QQ                                            /DAT 625
3430     0        FEXT                                                      /DAT 626
3431  1045        TAD         45                                            /DAT 627
3432  7710        SPA   CLA                                                 /DAT 628
3433  5243        JMP         CD27     /JUMP IF OUT OF RANGE                /DAT 629
3434  4476        JMS   I     LPUT     /STORE VARIABLES                     /DAT 630
3435  4435        JMS   I     LANG     /COMPUTE ANGLES                      /DAT 631
3436  4474        JMS   I     LRNG     /TEST TO SEE IF IN RANGE             /DAT 632
3437  5243        JMP         CD27     /JUMP IF OUT OF RANGE                /DAT 633
3440  4436        JMS   I     LDAT     /JUMP IF IN RANGE                    /DAT 634
3441  3777        DCA   I     FRSTL    /SET FRST#0                          /DAT 635
3442  4437        JMS   I     LSTD     /INSERT STANDARDS                    /DAT 636
3443  4475  CD27, JMS   I     LGET                                          /DAT 637
3444  3026        BLKB                                                      /DAT 638
3445  1111        TAD         LLIM     /TEST L-LLIM                         /DAT 639
3446  7041        CIA                                                       /DAT 640
3447  1105        TAD         L                                             /DAT 641
3450  7640        SZA   CLA                                                 /DAT 642
3451  5311        JMP         CD2F                                          /DAT 643
3452  1107        TAD         DL       /SET DL#-DL                          /DAT 644
```

```
3453  7041        CIA                                                    /DAT 645
3454  3107        DCA        DL                                          /DAT 646
3455  1111        TAD        LLIM    /INTERCHANGE LLIM AND LALT          /DAT 647
3456  3122        DCA        CHNG                                        /DAT 648
3457  1113        TAD        LALT                                        /DAT 649
3460  3111        DCA        LLIM                                        /DAT 650
3461  1122        TAD        CHNG                                        /DAT 651
3462  3113        DCA        LALT                                        /DAT 652
3463  1110        TAD        KLIM    /TEST K-KLIM                        /DAT 653
3464  7041        CIA                                                    /DAT 654
3465  1104        TAD        K                                           /DAT 655
3466  7640        SZA   CLA                                              /DAT 656
3467  5315        JMP        CD2G                                        /DAT 657
3470  1106        TAD        DK      /SET DK#-DK                         /DAT 658
3471  7041        CIA                                                    /DAT 659
3472  3106        DCA        DK                                          /DAT 660
3473  1110        TAD        KLIM    /INTERCHANGE KLIM AND KALT          /DAT 661
3474  3122        DCA        CHNG                                        /DAT 662
3475  1112        TAD        KALT                                        /DAT 663
3476  3110        DCA        KLIM                                        /DAT 664
3477  1122        TAD        CHNG                                        /DAT 665
3500  3112        DCA        KALT                                        /DAT 666
3501  1114        TAD        HMAX    /TEST H-HMAX                        /DAT 667
3502  7041        CIA                                                    /DAT 668
3503  1103        TAD        H                                           /DAT 669
3504  7650        SNA   CLA                                              /DAT 670
3505  5321        JMP        CD2H                                        /DAT 671
3506  2103        ISZ        H       /INCREMENT H                        /DAT 672
3507  7000        NOP                                                    /DAT 673
3510  5200        JMP        CD26                                        /DAT 674
3511  1105  CD2F, TAD        L       /INCREMENT L                        /DAT 675
3512  1107        TAD        DL                                          /DAT 676
3513  3105        DCA        L                                           /DAT 677
3514  5200        JMP        CD26                                        /DAT 678
3515  1104  CD2G, TAD        K       /INCREMENT K                        /DAT 679
3516  1106        TAD        DK                                          /DAT 680
3517  3104        DCA        K                                           /DAT 681
3520  5200        JMP        CD26                                        /DAT 682
3521  2501  CD2H, ISZ   I    LLST  /SET LAST # 1                        /DAT 683
3522  4476        JMS   I    LPUT                                        /DAT 684
3523  7040        CMA                /MEASURE STANDARDS                  /DAT 685
3524  3776        DCA   I    AKSTD                                       /DAT 686
3525  4437        JMS   I    LSTD                                        /DAT 687
3526  5466        JMP   I    LOMGA                                       /DAT 688
                                                                        /DAT 689
            /SUBROUTINE TO FLOAT INDICES.                               /DAT 690
3527     0  FLINDX, 0                                                   /DAT 691
3530  1727          TAD I FLINDX        /SET ADDRESS OF FIXED INDEX FOR USE OF AUTO/DAT 692
3531  3015          DCA 15                                              /DAT 693
3532  1210          TAD LFH             /SET ADDRESS OF FLOATING POINT INDEX.  /DAT 694
3533  3352          DCA AFNDX                                           /DAT 695
3534  1156          TAD MTHR            /SET COUNTER.                   /DAT 696
3535  3353          DCA KFNDX                                           /DAT 697
3536  1415  FNDX1,  TAD I 15            /FLOAT INDEX.                   /DAT 698
3537  4471          JMS I LFLT                                          /DAT 699
3540  4407          JMS I LFPT                                          /DAT 700
3541  6752          FPUT I AFNDX                                        /DAT 701
3542     0          FEXT                                                /DAT 702
3543  1154          TAD THR             /ADVANCE ADDRESS.               /DAT 703
3544  1352          TAD AFNDX                                           /DAT 704
3545  3352          DCA AFNDX                                           /DAT 705
3546  2353          ISZ KFNDX           /TEST COUNTER.                  /DAT 706
3547  5336          JMP FNDX1                                           /DAT 707
3550  2327          ISZ FLINDX          /SET RETURN.                    /DAT 708
3551  5727          JMP I FLINDX        /RETURN.                        /DAT 709
3552     0  AFNDX,  0                                                   /DAT 710
3553     0  KFNDX,  0                                                   /DAT 711
                                                                        /DAT 712
            /DUMMY SUBROUTINE REJECT                                    /DAT 713
3554     0  REJ,  0                                                     /DAT 714
3555  2354        ISZ        REJ                                         /DAT 715
3556  5754        JMP   I    REJ                                         /DAT 716
                                                                        /DAT 717
            *3576                                                       /DAT 718
3576  4236  AKSTD,  KSTD                                                /DAT 719
3577  3127  FRSTL,  FIRST                                               /DAT 720
```

```
                CREC#1146                                                  /DAT 722
                RTMC#667                                                   /DAT 723
                NSTP#756                                                   /DAT 724
                DTCST#606                                                  /DAT 725
                FACTOR#2426                                                /DAT 726
                LCODE#161                                                  /DAT 727
                LPRNT#144                                                  /DAT 728
                DCOLL#643                                                  /DAT 729
                DTTH#640                                                   /DAT 730
                NREFL#2766                                                 /DAT 731
                SHUTK#2776                                                 /DAT 732
                SHUTR#2446                                                 /DAT 733
                LFPT#7                                                     /DAT 734
                LFNP#26                                                    /DAT 735
                LFOP#27                                                    /DAT 736
                LFIX#34                                                    /DAT 737
                LMI#63                                                     /DAT 738
                LIDUT#64                                                   /DAT 739
                LOMGA#66                                                   /DAT 740
                LFLT#71                                                    /DAT 741
                LGET#75                                                    /DAT 742
                LPUT#76                                                    /DAT 743
                SINT#114                                                   /DAT 744
                ONE#146                                                    /DAT 745
                TWO#151                                                    /DAT 746
                THR#154                                                    /DAT 747
                MTHR#156                                                   /DAT 748
                LCRLF#165                                                  /DAT 749
                LWMOT#167                                                  /DAT 750
                COUNT#170                                                  /DAT 751
                ACCCNT#173                                                 /DAT 752
                MOTSET#531                                                 /DAT 753
                FH#4454                                                    /DAT 754
                CTTH#4465                                                  /DAT 755
                COST#5507                                                  /DAT 756
                VFOUT#7200                                                 /DAT 757
                AFH#100                /BEGIN COMMON STORAGE LOCATIONS OF BLOCKA  /DAT 758
                LVFOUT#101                                                 /DAT 759
                ONEHAF#102                                                 /DAT 760
                LCOST#105                                                  /DAT 761
                RTMC2#106                                                  /DAT 762
                LNSTP#107                                                  /DAT 763
                LDTTH#110                                                  /DAT 764
                LMTSET#111                                                 /DAT 765
                LDCOLL#112                                                 /DAT 766
                LRTMC#113                                                  /DAT 767
                LFCTR#114                                                  /DAT 768
                LRTMSV#115                                                 /DAT 769
                LFACSV#116                                                 /DAT 770
                LDLOL#117                                                  /DAT 771
                LBW#120                                                    /DAT 772
                LBKGFC#121                                                 /DAT 773
                LFCSV2#122             /END COMMON STORAGE LOCATIONS OF BLOCKA    /DAT 774
                DATAK#127              /BEGIN COMMON STORAGE FOR TEMPORARIES      /DAT 775
                TEMP#127                                                   /DAT 776
                LINDX#130                                                  /DAT 777
                NS#131                                                     /DAT 778
                ST#132                                                     /DAT 779
                BKGI#132                                                   /DAT 780
                NTCNT#132                                                  /DAT 781
                TOTCNT#135                                                 /DAT 782
                SIGCNT#135                                                 /DAT 783
                                                                           /DAT 784
        /SUBROUTINE DATA                                                   /DAT 785
                *3600                                                      /DAT 786
3600    0  DATA,  0                                                        /DAT 787
3601    4407      JMS I LFPT           /SAVE SINE THETA                    /DAT 788
3602    5114      FGET SINT                                                /DAT 789
3603    6132      FPUT ST                                                  /DAT 790
3604    0         FEXT                                                     /DAT 791
3605    4475      JMS I LGET           /TRANSFER CONSTANTS AND TEMPORARIES TO COMM/DAT 792
3606    3054      BLOCKA                                                   /DAT 793
3607    4544      JMS I LPRNT                                              /DAT 794
3610    4311      4311                                                     /DAT 795
3611    1156      TAD MTHR             /PRINT INDICES                      /DAT 796
3612    3127      DCA DATAK                                                /DAT 797
3613    1100      TAD AFH                                                  /DAT 798
3614    3130      DCA LINDX                                                /DAT 799
3615    4407  DATA2,  JMS I LFPT                                           /DAT 800
3616    5530      FGET I LINDX                                             /DAT 801
3617    0         FEXT                                                     /DAT 802
```

```
3620  4501          JMS I LVFOUT                                          /DAT 803
3621     4          4                                                     /DAT 804
3622     0          0                                                     /DAT 805
3623  1154          TAD THR                                               /DAT 806
3624  1130          TAD LINDX                                             /DAT 807
3625  3130          DCA LINDX                                             /DAT 808
3626  2127          ISZ DATAK                                             /DAT 809
3627  5215          JMP DATA2                                             /DAT 810
3630  4427          JMS I LFOP          /PRINT CALCULATED ANGLES          /DAT 811
3631  7774          -4                                                    /DAT 812
3632  4465  LCTTH,  CTTH                                                  /DAT 813
3633  4407          JMS I LFPT          /COMPUTE STARTING 2 THETA         /DAT 814
3634  5520          FGET I LBW                                            /DAT 815
3635  4151          FDIV TWO                                              /DAT 816
3636     6          FNEG                                                  /DAT 817
3637  1632          FADD I LCTTH                                          /DAT 818
3640  6632          FPUT I LCTTH                                          /DAT 819
3641  5132          FGET ST             /COMPUTE NUMBER OF STEPS IN SCAN  /DAT 820
3642  4505          FDIV I LCOST                                          /DAT 821
3643  3517          FMPY I LDLOL                                          /DAT 822
3644  1520          FADD I LBW                                            /DAT 823
3645  4510          FDIV I LDTTH                                          /DAT 824
3646  2102          FSUB ONEHAF                                           /DAT 825
3647     0          FEXT                                                  /DAT 826
3650  4434          JMS I LFIX                                            /DAT 827
3651  3131          DCA NS              /SAVE NUMBER OF STEPS             /DAT 828
3652  4561          JMS I LCODE                                           /DAT 829
3653  7340          7340                                                  /DAT 830
3654  7340          7340                                                  /DAT 831
3655  4511          JMS I LMTSET        /START MOTORS.                    /DAT 832
3656  4567          JMS I LWMOT         /WAIT UNTIL SETTING IS COMPLETE   /DAT 833
3657  4561          JMS I LCODE                                           /DAT 834
3660  7272          7272                                                  /DAT 835
3661     0          0000                                                  /DAT 836
3662  7001          IAC                 /OPEN SHUTTER                     /DAT 837
3663  4754          JMS I LSHUTR                                          /DAT 838
3664  1351          TAD MIN5            /WAIT .5 SECONDS AFTER SIGNAL TO OPEN SHUTT/DAT 839
3665  3753          DCA I LSHUTK                                          /DAT 840
3666  1753          TAD I LSHUTK                                          /DAT 841
3667  7640          SZA CLA                                               /DAT 842
3670  5266          JMP .-2                                               /DAT 843
3671  4357          JMS BKG             /SET UP AND COUNT FIRST BKG       /DAT 844
3672  4407          JMS I LFPT                                            /DAT 845
3673  5173          FGET ACCCNT                                           /DAT 846
3674  6132          FPUT BKG1           /SAVE 1ST BKG                     /DAT 847
3675  5516          FGET I LFACSV       /SET UP FOR SCAN                  /DAT 848
3676  6514          FPUT I LFCTR                                          /DAT 849
3677  5746          FGET I LSDTC                                          /DAT 850
3700  6747          FPUT I LDTCST                                         /DAT 851
3701     0          FEXT                                                  /DAT 852
3702  1131          TAD  NS                                               /DAT 853
3703  3507          DCA I LNSTP                                           /DAT 854
3704  1515          TAD I LRTMSV                                          /DAT 855
3705  3513          DCA I LRTMC                                           /DAT 856
3706  4512          JMS I LDCOLL        /MAKE SCAN                        /DAT 857
3707  4304          4304                /D.                               /DAT 858
3710  4407          JMS I LFPT                                            /DAT 859
3711  5173          FGET ACCCNT         /SAVE ACCUMULATED COUNT           /DAT 860
3712  6135          FPUT TOTCNT                                           /DAT 861
3713     0          FEXT                                                  /DAT 862
3714  4357          JMS BKG             /SET UP AND COUNT 2ND BKG         /DAT 863
3715  4754          JMS I LSHUTR        /CLOSE SHUTTER                    /DAT 864
3716  4565          JMS I LCRLF         /CR, LF                           /DAT 865
3717  5755          JMP I LRSLT         /JUMP TO PRINT RESULTS            /DAT 866
3720  4501  RETN,   JMS I LVFOUT        /PRINT STANDARD ERROR             /DAT 867
3721     5          5                                                     /DAT 868
3722     0          0                                                     /DAT 869
3723  4407          JMS I LFPT          /ADD ONE TO NUMBER OF REFLECTION  /DAT 870
3724  5750          FGET I LNREFL                                         /DAT 871
3725  1146          FADD ONE                                              /DAT 872
3726  6750          FPUT I LNREFL                                         /DAT 873
3727     0          FEXT                                                  /DAT 874
3730  4501          JMS I LVFOUT        /PRINT NUMBER OF REFLECTION       /DAT 875
3731     7          7                                                     /DAT 876
3732     0          0                                                     /DAT 877
3733  1352          TAD MIN8            /MARK END OF REFLECTION ON CHART  /DAT 878
3734  4756          JMS I LCREC                                           /DAT 879
3735  4565          JMS I LCRLF         /CR, LF                           /DAT 880
3736  4565          JMS I LCRLF                                           /DAT 881
3737  4476          JMS I LPUT                                            /DAT 882
3740  1345          TAD IBRK            /IS INDICATOR TO STOP PROGRAM SET. /DAT 883
```

```
3741  7650          SNA CLA                                                    /DAT 884
3742  5600  RSTRT,  JMP I DATA          /NO. RETURN.                           /DAT 885
3743  3345          DCA IBRK            /YES. CLEAR INDICATOR.                 /DAT 886
3744  5466          JMP I LOMGA         /JUMP TO WAITING LOOP.                 /DAT 887
3745     0  IBRK,   0                                                          /DAT 888
3746  4075  LSDTC,  STPDTC                                                     /DAT 889
3747   606  LDTCST, DTCST                                                      /DAT 890
3750  2766  LNREFL, NREFL                                                      /DAT 891
3751  7773  MIN5,   -5                                                         /DAT 892
3752  7770  MIN8,   -10                                                        /DAT 893
3753  2776  LSHUTK, SHUTK                                                      /DAT 894
3754  2446  LSHUTR, SHUTR                                                      /DAT 895
3755  4141  LRSLT,  RESULT                                                     /DAT 896
3756  1146  LCREC,  CREC                                                       /DAT 897
                                                                               /DAT 898
            /BACKGROUND COUNT                                                  /DAT 899
3757     0  BKG,    0                   /SET UP AND COUNT BKG                  /DAT 900
3760  3507          DCA I LNSTP         /SET UP                                /DAT 901
3761  1106          TAD RTMC2                                                  /DAT 902
3762  3513          DCA I LRTMC                                                /DAT 903
3763  4407          JMS I LFPT                                                 /DAT 904
3764  5522          FGET I LFCSV2                                              /DAT 905
3765  6514          FPUT I LFCTR                                               /DAT 906
3766  5774          FGET I LBKDC                                               /DAT 907
3767  6747          FPUT I LDTCST                                              /DAT 908
3770     0          FEXT                                                       /DAT 909
3771  4512          JMS I LDCOLL        /MAKE COUNT                            /DAT 910
3772  4302          4302                /B.                                    /DAT 911
3773  5757          JMP I BKG           /RETURN                                /DAT 912
3774  4072  LBKDC,  BKGDTC                                                     /DAT 913
                                                                               /DAT 914
            *3054                                                              /DAT 915
3054  7755  BLOCKA, -23                                                        /DAT 916
3055  4454          FH                  /AFH                100. BEGIN BLOCKA  /DAT 917
3056  7200          VFOUT               /LVFOUT             101                /DAT 918
3057     1          0001                /ONEHAF#1.5         102                /DAT 919
3060  3000          3000                /                   103                /DAT 920
3061     0          0                   /                   104                /DAT 921
3062  5507          COST                /LCOST              105                /DAT 922
3063     0          0                   /RTMC2              106                /DAT 923
3064   756          NSTP                /LNSTP              107                /DAT 924
3065   640          DTTH                /LDTTHL             110                /DAT 925
3066   531          MOTSET              /LMTSET             111                /DAT 926
3067   643          DCOLL               /LDCOLL             112                /DAT 927
3070   667          RTMC                /LRTMC              113                /DAT 928
3071  2426          FACTOR              /LFCTR              114                /DAT 929
3072  4053          RTMSV               /LRTMSV             115                /DAT 930
3073  4061          FACSV               /LFACSV             116                /DAT 931
3074  4104          DLOL                /LDLOL              117                /DAT 932
3075  4101          BW                  /LBW                120                /DAT 933
3076  4050          BKGFAC              /LBKGFC             121                /DAT 934
3077  4064          FACSV2              /LFCSV2             122. END OF BLOCKA /DAT 935
                                                                               /DAT 936
            *4000                                                              /DAT 937
            TEN#7450                                                           /DAT 938
            WVL#4125                                                           /DAT 939
            FP500#2433                                                         /DAT 940
            /SD. SET UP DATA COLLECTION                                        /DAT 941
4000  4426  INDTCL, JMS I LFNP          /READ TIME, SCALE, BACKGROUND FACTOR.  /DAT 942
4001  7775          -3                                                         /DAT 943
4002  4042          TIME                                                       /DAT 944
4003  4407          JMS I LFPT          /COMPUTE NEGATIVE OF TENTHS OF SECONDS TO C/DAT 945
4004  5242          FGET TIME                                                  /DAT 946
4005  3654          FMPY I LTEN                                                /DAT 947
4006  6242          FPUT TIME                                                  /DAT 948
4007  1255          FADD ONEHF                                                 /DAT 949
4010     0          FEXT                                                       /DAT 950
4011  4434          JMS I LFIX                                                 /DAT 951
4012  7041          CIA                                                        /DAT 952
4013  3253          DCA RTMSV                                                  /DAT 953
4014  4407          JMS I LFPT          /COMPUTE SCALE FACTOR, 500/(PULSES FOR FULL/DAT 954
4015  5660          FGET I LF500                                               /DAT 955
4016  4245          FDIV SCALE                                                 /DAT 956
4017  6261          FPUT FACSV                                                 /DAT 957
4020  4250          FDIV BKGFAC         /COMPUTE SCALE FACTOR FOR BACKGROUND COUNTS/DAT 958
4021  6264          FPUT FACSV2                                                /DAT 959
4022  5267          FGET DEDTM          /COMPUTE DEAD TIME CONSTANT FOR STEPPING /DAT 960
4023  4242          FDIV TIME                                                  /DAT 961
4024  6275          FPUT STPDTC                                                /DAT 962
4025  4250          FDIV BKGFAC         /COMPUTE DEAD TIME CONSTANT FOR BACKGROUND /DAT 963
4026  6272          FPUT BKGDTC                                                /DAT 964
```

```
4027  5242          FGET TIME          /COMPUTE TIME FOR BACKGROUND COUNTS.   /DAT 965
4030     6          FNEG                                                      /DAT 966
4031  3250          FMPY BKGFAC                                               /DAT 967
4032  1255          FADD ONEHF                                                /DAT 968
4033     0          FEXT                                                      /DAT 969
4034  4434          JMS I LFIX                                                /DAT 970
4035  3700          DCA I LRTMC2                                              /DAT 971
4036  4426          JMS I LFNP         /READ BASE WIDTH, DLOL.                /DAT 972
4037  7776          -2                                                        /DAT 973
4040  4101          BW                                                        /DAT 974
4041  5466          JMP I LOMGA                                               /DAT 975
                                                                             /DAT 976
4042     0  TIME,   0                                                        /DAT 977
4043     0          0                                                        /DAT 978
4044     0          0                                                        /DAT 979
4045     0  SCALE,  0                                                        /DAT 980
4046     0          0                                                        /DAT 981
4047     0          0                                                        /DAT 982
4050     0  BKGFAC, 0                                                        /DAT 983
4051     0          0                                                        /DAT 984
4052     0          0                                                        /DAT 985
4053     0  RTMSV,  0                                                        /DAT 986
4054  7450  LTEN,   TEN                                                      /DAT 987
4055     0  ONEHF,  0000                                                     /DAT 988
4056  2000          2000                                                     /DAT 989
4057     0          0000                                                     /DAT 990
4060  2433  LF500,  FP500                                                    /DAT 991
4061     0  FACSV,  0                                                        /DAT 992
4062     0          0                                                        /DAT 993
4063     0          0                                                        /DAT 994
4064     0  FACSV2, 0                                                        /DAT 995
4065     0          0                                                        /DAT 996
4066     0          0                                                        /DAT 997
4067  7762  DEDTM,  7762               /.0000378 TENTH SECONDS                /DAT 998
4070  2364          2364                                                     /DAT 999
4071  2665          2665                                                     /DAT1000
4072     0  BKGDTC, 0                                                        /DAT1001
4073     0          0                                                        /DAT1002
4074     0          0                                                        /DAT1003
4075     0  STPDTC, 0                                                        /DAT1004
4076     0          0                                                        /DAT1005
4077     0          0                                                        /DAT1006
4100  3063  LRTMC2, 3063                                                     /DAT1007
4101     0  BW,     0                                                        /DAT1008
4102     0          0                                                        /DAT1009
4103     0          0                                                        /DAT1010
4104     0  DLOL,   0                                                        /DAT1011
4105     0          0                                                        /DAT1012
4106     0          0                                                        /DAT1013
                                                                             /DAT1014
            /PS. PRINT SCALE                                                 /DAT1015
4107  4407  PRSCAL, JMS I LFPT                                               /DAT1016
4110  5245          FGET SCALE                                               /DAT1017
4111     0          FEXT                                                     /DAT1018
4112  4716          JMS I AVFOUT                                             /DAT1019
4113     7          7                                                        /DAT1020
4114     0          0                                                        /DAT1021
4115  5466          JMP I LOMGA                                              /DAT1022
4116  7200  AVFOUT, VFOUT                                                    /DAT1023
                                                                             /DAT1024
            /WA. READ WAVELENGTH AND CELL EDGES                              /DAT1025
4117  4426  WAVE,   JMS I LFNP                                               /DAT1026
4120  7774          -4                                                       /DAT1027
4121  4125          WVL                                                      /DAT1028
4122  5466          JMP I LOMGA                                              /DAT1029
                                                                             /DAT1030
            *4141                                                            /DAT1031
            /PART OF SUBROUTINE DATA                                         /DAT1032
4141  4544  RESULT, JMS I LPRNT                                              /DAT1033
4142  4322          4322                                                     /DAT1034
4143  1131          TAD NS                                                   /DAT1035
4144  4464          JMS I LIOUT        /PUT OUT NUMBER OF STEPS IN SCAN      /DAT1036
4145  1131          TAD NS             /COMPUTE NET COUNT AND ITS            /DAT1037
4146  7040          CMA                                                      /DAT1038
4147  4471          JMS I LFLT         /     STANDARD ERROR                  /DAT1039
4150  4407          JMS I LFPT                                               /DAT1040
4151  4521          FDIV I LBKGFC                                            /DAT1041
4152  4151          FDIV TWO                                                 /DAT1042
4153  6127          FPUT TEMP                                                /DAT1043
4154  5132          FGET BKGI                                                /DAT1044
4155  1173          FADD ACCCNT                                              /DAT1045
```

```
4156  3127          FMPY TEMP                                          /DATI046
4157  1135          FADD TOTCNT                                        /DATI047
4160  6132          FPUT NTCNT                                         /DATI048
4161  2135          FSUB TOTCNT                                        /DATI049
4162  3127          FMPY TEMP                                          /DATI050
4163  1135          FADD TOTCNT                                        /DATI051
4164     2          FSQT                                               /DATI052
4165  6135          FPUT SIGCNT                                        /DATI053
4166  5132          FGET NTCNT                                         /DATI054
4167     0          FEXT                                               /DATI055
4170  4501          JMS I LVFOUT          /PUT OUT NET COUNT           /DATI056
4171     7          7                                                  /DATI057
4172     0          0                                                  /DATI058
4173  4407          JMS I LFPT            /PUT OUT STANDARD ERROR      /DATI059
4174  5135          FGET SIGCNT                                        /DATI060
4175     0          FEXT                                               /DATI061
4176  5777          JMP I LRETN                                        /DATI062
4177  3720  LRETN,  RETN                                               /DATI063


            *4200                                                      /DATI065
            LCRLF#165                                                  /DATI066
            LPRNT#144                                                  /DATI067
            LRNG#74                                                    /DATI068
            LINTIN#73                                                  /DATI069
            LOMGA#66                                                   /DATI070
            THR#154                                                    /DATI071
            MTHR#156                                                   /DATI072
            LFLT#71                                                    /DATI073
            LFPT#7                                                     /DATI074
            LANG#35                                                    /DATI075
            LDAT#36                                                    /DATI076
            CHECK#1025                                                 /DATI077
            FH#4454                                                    /DATI078
            FLINDX#3527                                                /DATI079
            /IS. SET UP STANDARD REFLECTIONS                           /DATI080
4200  4473  SSTD,   JMS I LINTIN          /READ IN NUMBER OF STANDARDS. /DATI081
4201  7041          CIA                                                /DATI082
4202  3234          DCA NSTD                                           /DATI083
4203  1234          TAD NSTD                                           /DATI084
4204  7450          SNA                                                /DATI085
4205  5466          JMP I LOMGA           /IF ZERO, RETURN TO WAITING LOOP. /DATI086
4206  1154          TAD THR               /IF GREATER THAN 3, SET EQUAL TO 3. /DATI087
4207  7700          SMA CLA                                            /DATI088
4210  5213          JMP SSTD1                                          /DATI089
4211  1156          TAD MTHR                                           /DATI090
4212  3234          DCA NSTD                                           /DATI091
4213  4473  SSTD1,  JMS I LINTIN          /READ IN PERIOD OF STANDARDS. /DATI092
4214  3235          DCA PSTD                                           /DATI093
4215  7040          CMA                   /SET COUNTER # -1.           /DATI094
4216  3236          DCA KSTD                                           /DATI095
4217  1234          TAD NSTD              /LOOP TO READ IN INDICES OF STANDARDS. /DATI096
4220  3237          DCA KK1                                            /DATI097
4221  1241          TAD LHS1              /AUTO-INDEX.                 /DATI098
4222  3015          DCA I5                                             /DATI099
4223  1156  SSTD2,  TAD MTHR                                           /DATI100
4224  3240          DCA KK2                                            /DATI101
4225  4473  SSTD3,  JMS I LINTIN                                       /DATI102
4226  3415          DCA I I5                                           /DATI103
4227  2240          ISZ KK2                                            /DATI104
4230  5225          JMP SSTD3                                          /DATI105
4231  2237          ISZ KK1                                            /DATI106
4232  5223          JMP SSTD2                                          /DATI107
4233  5466          JMP I LOMGA           /RETURN TO WAITING LOOP.     /DATI108
4234     0  NSTD,   0                                                  /DATI109
4235     0  PSTD,   0                                                  /DATI110
4236     0  KSTD,   0                                                  /DATI111
4237     0  KK1,    0                                                  /DATI112
4240     0  KK2,    0                                                  /DATI113
4241  4241  LHS1,   HS1-1                                              /DATI114
4242     0  HS1,    0                                                  /DATI115
4243     0  KS1,    0                                                  /DATI116
4244     0  LS1,    0                                                  /DATI117
4245     0  HS2,    0                                                  /DATI118
4246     0  KS2,    0                                                  /DATI119
4247     0  LS2,    0                                                  /DATI120
4250     0  HS3,    0                                                  /DATI121
4251     0  KS3,    0                                                  /DATI122
4252     0  LS3,    0                                                  /DATI123
                                                                       /DATI124
```

```
                /SUBROUTINE TO INSERT STANDARDS PERIODICALLY.                    /DAT1125
                LEAD#2237                                                        /DAT1126
4253     0      STD,     0                                                       /DAT1127
4254  1234              TAD NSTD                                                 /DAT1128
4255  7650              SNA CLA                                                  /DAT1129
4256  5653              JMP I STD          /RETURN IF NO STANDARDS.              /DAT1130
4257  2236              ISZ KSTD           /TEST COUNTER.                        /DAT1131
4260  5653              JMP I STD          /RETURN IF NOT ZERO.                  /DAT1132
4261  1235              TAD PSTD           /IF ZERO, RESET COUNTER.              /DAT1133
4262  1234              TAD NSTD                                                 /DAT1134
4263  7040              CMA                                                      /DAT1135
4264  3236              DCA KSTD                                                 /DAT1136
4265  1234              TAD NSTD           /LOOP TO COLLECT DATA FOR STANDARDS.  /DAT1137
4266  3377              DCA KK3                                                  /DAT1138
4267  1241              TAD LHSI                                                 /DAT1139
4270  3272              DCA STD2                                                 /DAT1140
4271  4720      STD1,   JMS I LFNDX        /FLOAT STANDARD INDICES.              /DAT1141
4272     0      STD2,   0                                                        /DAT1142
4273  4435              JMS I LANG         /CALCULATE ANGLES.                    /DAT1143
4274  4474              JMS I LRNG         /TEST TO SEE IF IN RANGE.             /DAT1144
4275  5301              JMP STD3                                                 /DAT1145
4276  4544              JMS I LPRNT                                              /DAT1146
4277  4323              4323                                                     /DAT1147
4300  4436              JMS I LDAT         /COLLECT DATA.                        /DAT1148
4301  1272      STD3,   TAD STD2           /ADVANCE ADDRESS.                     /DAT1149
4302  1154              TAD THR                                                  /DAT1150
4303  3272              DCA STD2                                                 /DAT1151
4304  2377              ISZ KK3            /TEST COUNTER OF NUMBER OF STANDARDS. /DAT1152
4305  5271              JMP STD1           /RETURN FOR NEXT STANDARD.            /DAT1153
4306  4544              JMS I LPRNT                                              /DAT1154
4307  4303              4303                                                     /DAT1155
4310  4565              JMS I LCRLF                                              /DAT1156
4311  4717              JMS I LCHK         /CHECK POSITION.                      /DAT1157
4312     1              1                                                        /DAT1158
4313  7000              NOP                /IGNORE ERROR.                        /DAT1159
4314  4565              JMS I LCRLF                                              /DAT1160
4315  4721              JMS I LLEAD        /PUT OUT LEADER.                      /DAT1161
4316  5653              JMP I STD          /RETURN.                              /DAT1162
4317  1025      LCHK,   CHECK                                                    /DAT1163
4320  3527      LFNDX,  FLINDX                                                   /DAT1164
4321  2237      LLEAD,  LEAD                                                     /DAT1165
                *4377                                                            /DAT1166
4377     0      KK3,    0                                                        /DAT1167


                /RANGE SUBROUTINE FOR BISECTING POSITION.                        /DAT1169
                *4322                                                            /DAT1170
                LFPT#7                                                           /DAT1171
                CTTH#4465                                                        /DAT1172
                HORD#45                                                          /DAT1173
                CCHI#4473                                                        /DAT1174
                                                                                 /DAT1175
4322     0      RNGE,   0                                                        /DAT1176
4323  4407              JMS I LFPT         /COMPUTE (CTTH-TTHL)                  /DAT1177
4324  5742              FGET I LTTH                                              /DAT1178
4325  2343              FSUB TTHL                                                /DAT1179
4326     0              FEXT                                                     /DAT1180
4327  1045              TAD HORD                                                 /DAT1181
4330  7750              SPA SNA CLA                                              /DAT1182
4331  5340              JMP RNGE1          /IF - OR 0, ACCEPT AS IN RANGE        /DAT1183
4332  4407              JMS I LFPT         /IF +, COMPUTE (CCHI-CHIL)            /DAT1184
4333  5746              FGET I LCHI                                              /DAT1185
4334  2347              FSUB CHIL                                                /DAT1186
4335     0              FEXT                                                     /DAT1187
4336  1045              TAD HORD                                                 /DAT1188
4337  7700              SMA CLA            /IF -, REJECT AS OUT OF RANGE         /DAT1189
4340  2322      RNGE1,  ISZ RNGE           /IF 0 OR +, ACCEPT AS IN RANGE        /DAT1190
4341  5722              JMP I RNGE                                               /DAT1191
4342  4465      LTTH,   CTTH                                                     /DAT1192
4343     7      TTHL,   0007               /TTHL#+90                             /DAT1193
4344  2640              2640                                                     /DAT1194
4345     0              0000                                                     /DAT1195
4346  4473      LCHI,   CCHI                                                     /DAT1196
4347     6      CHIL,   0006               /CHIL#-38                             /DAT1197
4350  4700              4700                                                     /DAT1198
4351     0              0000                                                     /DAT1199
                                                                                 /DAT1200
```

```
          /CALCULATE TWO THETA, CHI, AND PHI.                                  /DAT1202
          *4400                                                                /DAT1203
          LMV#25                                                               /DAT1204
          LFPT#7                                                               /DAT1205
          TWO#151                                                              /DAT1206
          ONE#146                                                              /DAT1207
          VPH1#100                                                             /DAT1208
          VPH2#103                                                             /DAT1209
          VPH3#106                                                             /DAT1210
          ATEMP#111                                                            /DAT1211
          SINT#114                                                             /DAT1212
          COST#117                                                             /DAT1213
          MB11#7600                                                            /DAT1214
                                                                               /DAT1215
4400    0 ANG, 0                                                               /DAT1216
4401 4425       JMS   I     LMV   /COMPUTE PLANE NORMAL                        /DAT1217
4402 7600       MB11                                                           /DAT1218
4403 4454       FH                                                             /DAT1219
4404  100       VPH1              /STORE VECTOR IN COMMON                      /DAT1220
4405 4407       JMS   I     LFPT  /CALCULATE PHI ARTN(VPH2/VPH1)               /DAT1221
4406 5100       FGET        VPH1                                               /DAT1222
4407 6653       FPUT  I     LB                                                 /DAT1223
4410 5103       FGET        VPH2                                               /DAT1224
4411    5       FATN                                                           /DAT1225
4412 6276       FPUT        CPHI                                               /DAT1226
4413 5100       FGET        VPH1  /COMPUTE CHI                                 /DAT1227
4414 3100       FMPY        VPH1                                               /DAT1228
4415 6111       FPUT        ATEMP /STORE VPH1**2                               /DAT1229
4416 5103       FGET        VPH2                                               /DAT1230
4417 3103       FMPY        VPH2                                               /DAT1231
4420 1111       FADD        ATEMP                                              /DAT1232
4421 6111       FPUT        ATEMP /VPH1**2+VPH2**2                             /DAT1233
4422    2       FSQT                                                           /DAT1234
4423 6653       FPUT  I     LB                                                 /DAT1235
4424 5106       FGET        VPH3                                               /DAT1236
4425    5       FATN              /CHI#ARTN(VPH3/SQRT(VPH1**2+VPH2**2))        /DAT1237
4426 6273       FPUT        CCHI                                               /DAT1238
4427 5106       FGET        VPH3                                               /DAT1239
4430 3106       FMPY        VPH3                                               /DAT1240
4431 1111       FADD        ATEMP /VPH1**2+VPH2**2+VPH3**2                     /DAT1241
4432    2       FSQT                                                           /DAT1242
4433 3652       FMPY  I     LWVL                                               /DAT1243
4434 4151       FDIV        TWO                                                /DAT1244
4435 6114       FPUT        SINT  /SIN(THETA)                                  /DAT1245
4436 3114       FMPY        SINT                                               /DAT1246
4437 6111       FPUT        ATEMP                                              /DAT1247
4440 5146       FGET        ONE                                                /DAT1248
4441 2111       FSUB        ATEMP                                              /DAT1249
4442    2       FSQT                                                           /DAT1250
4443 6653       FPUT  I     LB    /STORE COS(THETA)                            /DAT1251
4444 5114       FGET        SINT                                               /DAT1252
4445    5       FATN              /THETA                                       /DAT1253
4446 3151       FMPY        TWO                                                /DAT1254
4447 6265       FPUT        CTTH  /2THETA                                      /DAT1255
4450    0       FEXT                                                           /DAT1256
4451 5600       JMP   I     ANG   /RETURN                                      /DAT1257
4452 4125 LWVL,4125                                                            /DAT1258
4453 5507 LB,  5507                                                            /DAT1259
4454    0 FH,  0                  /VARIABLES                                   /DAT1260
4455    0      0                                                               /DAT1261
4456    0      0                                                               /DAT1262
4457    0 FK,  0                                                               /DAT1263
4460    0      0                                                               /DAT1264
4461    0      0                                                               /DAT1265
4462    0 FL,  0                                                               /DAT1266
4463    0      0                                                               /DAT1267
4464    0      0                                                               /DAT1268
4465    0 CTTH,0                                                               /DAT1269
4466    0      0                                                               /DAT1270
4467    0      0                                                               /DAT1271
4470    0 COMG,0                                                               /DAT1272
4471    0      0                                                               /DAT1273
4472    0      0                                                               /DAT1274
4473    0 CCHI,0                                                               /DAT1275
4474    0      0                                                               /DAT1276
4475    0      0                                                               /DAT1277
4476    0 CPHI,0                                                               /DAT1278
4477    0      0                                                               /DAT1279
4500    0      0                                                               /DAT1280
```

```
                /REJECTION TEST FOR R 3 BAR.                                        /R3B   1
                /ACCEPT IF ABSOLUTE VALUE OF K IS LESS THAN OR EQUAL TO H AND THE ABSOLU/R3B   2
                /   VALUE OF L IS LESS THAN OR EQUAL TC H.                          /R3B   3
                *3554                                                               /R3B   4
3554     0      REJ,    0                                                          /R3B   5
3555  1104              TAD K                                                      /R3B   6
3556  7500              SMA                                                        /R3B   7
3557  7041              CIA                                                        /R3B   8
3560  1103              TAD H                                                      /R3B   9
3561  7710              SPA CLA                                                    /R3B  10
3562  5754              JMP I REJ                                                  /R3B  11
3563  1105              TAD L                                                      /R3B  12
3564  7500              SMA                                                        /R3B  13
3565  7041              CIA                                                        /R3B  14
3566  1103              TAD H                                                      /R3B  15
3567  7700              SMA CLA                                                    /R3B  16
3570  2354              ISZ REJ                                                    /R3B  17
3571  5754              JMP I REJ                                                  /R3B  18
                H#103                                                             /R3B  19
                K#104                                                             /R3B  20
                L#105                                                             /R3B  21


                /SUBROUTINE RNGE FOR PARALLEL POSITION.                           /PAR   1
                *4322                                                             /PAR   2
                LWHERE#145                                                        /PAR   3
                TTH#624                                                           /PAR   4
                LFPT#7                                                            /PAR   5
                TWO#151                                                           /PAR   6
                RNGT#111                                                          /PAR   7
                HORD#45                                                           /PAR   8
                LMOTOR#162                                                        /PAR   9
                MIT#1476                                                          /PAR  10
                LWMOT#167                                                         /PAR  11
                CTTH#4465                                                         /PAR  12
                COMG#4470                                                         /PAR  13
4322     0      RNGE,   0                                                         /PAR  14
4323  4407              JMS I LFPT                                                /PAR  15
4324  4151              FDIV TWO          - /CALCULATED 2THETA IS IN FL.PT. AC ON EXIT /PAR  16
4325  6111              FPUT RNGT           /SAVE THETA.                          /PAR  17
4326  1767              FADD I ACOMG        /IS THETA+OMEGA GREATER THAN OR EQUAL TO -4/PAR  18
4327  2371              FSUB LOLIM                                                /PAR  19
4330     0              FEXT                                                      /PAR  20
4331  1045              TAD HORD                                                  /PAR  21
4332  7710              SPA CLA                                                   /PAR  22
4333  5722              JMP I RNGE          /NO. REJECT RETURN.                   /PAR  23
4334  4407              JMS I LFPT          /IS THETA-OMEGA GREATER THAN OR EQUAL TO 11/PAR  24
4335  5111              FGET RNGT                                                 /PAR  25
4336  2767              FSUB I ACOMG                                              /PAR  26
4337  2374              FSUB HILIM                                                /PAR  27
4340     0              FEXT                                                      /PAR  28
4341  1045              TAD HORD                                                  /PAR  29
4342  7710              SPA CLA                                                   /PAR  30
4343  5722              JMP I RNGE          /NO. REJECT RETURN.                   /PAR  31
4344  4545              JMS I LWHERE        /YES.                                 /PAR  32
4345  4407              JMS I LFPT                                                /PAR  33
4346  5766              FGET I ACTTH        /IS CALCULATED 2THETA LESS THAN CURRENT 2TH/PAR  34
4347  2770              FSUB I ATTH                                               /PAR  35
4350     0              FEXT                                                      /PAR  36
4351  1045              TAD HORD                                                  /PAR  37
4352  7750              SPA SNA CLA                                               /PAR  38
4353  5364              JMP RNGE1           /YES. ACCEPT.                         /PAR  39
4354  4407              JMS I LFPT          /NO. ORIVE 2THETA HALF WAY TO CALCULATED 2T/PAR  40
4355  4151              FDIV TWO                                                  /PAR  41
4356  1770              FADD I ATTH                                               /PAR  42
4357  6770              FPUT I ATTH                                               /PAR  43
4360     0              FEXT                                                      /PAR  44
4361  4562              JMS I LMOTOR                                              /PAR  45
4362  1476              MIT                                                       /PAR  46
4363  4567              JMS I LWMOT                                               /PAR  47
4364  2322      RNGE1,  ISZ RNGE                                                  /PAR  48
4365  5722              JMP I RNGE                                                /PAR  49
4366  4465      ACTTH,  CTTH                                                      /PAR  50
4367  4470      ACOMG,  COMG                                                      /PAR  51
4370   624      ATTH,   TTH                                                       /PAR  52
4371     6      LOLIM,  0006                /-45                                  /PAR  53
4372  5140              5140                                                      /PAR  54
4373     0              0000                                                      /PAR  55
4374     7      HILIM,  0007                /116                                  /PAR  56
4375  3500              3500                                                      /PAR  57
4376     0              0000                                                      /PAR  58
```

```
            /CALCULATE TWO-THETA, OMEGA, AND PHI. CHI # 90.                    /PAR  60
            LMV#25                                                             /PAR  61
            LFPT#7                                                             /PAR  62
            TWO#151                                                            /PAR  63
            ONE#146                                                            /PAR  64
            MTWO#155                                                           /PAR  65
            MB11#7600                                                          /PAR  66
            VPH1#100                                                           /PAR  67
            VPH2#103                                                           /PAR  68
            VPH3#106                                                           /PAR  69
            ATEMP#111                                                          /PAR  70
            SINT#114                                                           /PAR  71
            WVL#4125                                                           /PAR  72
            B#5507                                                             /PAR  73
            *4400                                                              /PAR  74
4400     0  ANG,     0                                                        /PAR  75
4401  4425          JMS I LMV          /COMPUTE PLANE NORMAL.                 /PAR  76
4402  7600          MB11                                                      /PAR  77
4403  4454          FH                                                        /PAR  78
4404   100          VPH1               /STORE VECTOR IN COMMON.               /PAR  79
4405  4407          JMS I LFPT         /PHI # ARTN(VPH1/-VPH2)                /PAR  80
4406  5103          FGET VPH2                                                 /PAR  81
4407     6          FNEG                                                      /PAR  82
4410  6653          FPUT I LB                                                 /PAR  83
4411  5100          FGET VPH1                                                 /PAR  84
4412     5          FATN                                                      /PAR  85
4413  6276          FPUT CPHI                                                 /PAR  86
4414  5106          FGET VPH3                                                 /PAR  87
4415  6653          FPUT I LB          /OMEGA # ARTN(-SQRT(VPH1**2+VPH2**2)/VPH3) /PAR  88
4416  5100          FGET VPH1                                                 /PAR  89
4417  3100          FMPY VPH1                                                 /PAR  90
4420  6111          FPUT ATEMP                                                /PAR  91
4421  5103          FGET VPH2                                                 /PAR  92
4422  3103          FMPY VPH2                                                 /PAR  93
4423  1111          FADD ATEMP                                                /PAR  94
4424  6111          FPUT ATEMP         /SAVE VPH1**2+VPH2**2.                 /PAR  95
4425     2          FSQT                                                      /PAR  96
4426     6          FNEG                                                      /PAR  97
4427     5          FATN                                                      /PAR  98
4430  6270          FPUT COMG                                                 /PAR  99
4431  5106          FGET VPH3          /SIN(THETA)# SQRT(VPH1**2+VPH2**2+VPH3**2)*/PAR 100
4432  3106          FMPY VPH3                                                 /PAR 101
4433  1111          FADD ATEMP                                                /PAR 102
4434     2          FSQT                                                      /PAR 103
4435  3725          FMPY I LWVL                                               /PAR 104
4436  4151          FDIV TWO                                                  /PAR 105
4437  6114          FPUT SINT                                                 /PAR 106
4440  3114          FMPY SINT          /COS(THETA)# SQRT(1-(SIN(THETA))**2)   /PAR 107
4441     6          FNEG                                                      /PAR 108
4442  1146          FADD ONE                                                  /PAR 109
4443     2          FSQT                                                      /PAR 110
4444  6653          FPUT I LB                                                 /PAR 111
4445  5114          FGET SINT                                                 /PAR 112
4446     5          FATN               /THETA                                 /PAR 113
4447  3151          FMPY TWO           /2THETA                                /PAR 114
4450  6265          FPUT CTTH                                                 /PAR 115
4451     0          FEXT                                                      /PAR 116
4452  5600          JMP I ANG                                                 /PAR 117
4453  5507  LB,     B                                                         /PAR 118
4454     0  FH,     0                                                         /PAR 119
4455     0          0                                                         /PAR 120
4456     0          0                                                         /PAR 121
4457     0  FK,     0                                                         /PAR 122
4460     0          0                                                         /PAR 123
4461     0          0                                                         /PAR 124
4462     0  FL,     0                                                         /PAR 125
4463     0          0                                                         /PAR 126
4464     0          0                                                         /PAR 127
4465     0  CTTH,   0                                                         /PAR 128
4466     0          0                                                         /PAR 129
4467     0          0                                                         /PAR 130
4470     0  COMG,   0                                                         /PAR 131
4471     0          0                                                         /PAR 132
4472     0          0                                                         /PAR 133
4473     7  CCHI,   0007               /CHI # 90.                             /PAR 134
4474  2640          2640                                                      /PAR 135
4475     0          0000                                                      /PAR 136
4476     0  CPHI,   0                                                         /PAR 137
4477     0          0                                                         /PAR 138
4500     0          0                                                         /PAR 139
            *4525                                                              /PAR 140
4525  4125  LWVL,   WVL                                                       /PAR 141
```

```
                /PACKAGE TO CONVERT DATA COLLECTION FOR OMEGA SCANS                    /OSC   1
                /CONSTANTS IN COMMON STORAGE---WORKINF LOCATIONS                       /OSC   2
                        LVFOUT#101                                                     /OSC   3
                        LNSTP#102                                                      /OSC   4
                        LDOMG#103                                                      /OSC   5
                        LMTSET#104                                                     /OSC   6
                        LDCOLL#105                                                     /OSC   7
                        LRTMC#106                                                      /OSC   8
                        LFCTR#107                                                      /OSC   9
                        LCOMG#110                                                      /OSC  10
                        LBW#111                                                        /OSC  11
                        LNREFL#112                                                     /OSC  12
                        LZERO#113                                                      /OSC  13
                        LCREC#114                                                      /OSC  14
                        LSHUTR#115                                                     /OSC  15
                        LSHUTK#116                                                     /OSC  16
                /TEMPORARIES IN COMMON STORAGE---ERASABLE                              /OSC  17
                        NTCNT#121                                                      /OSC  18
                        SIG#124                                                        /OSC  19
                        TOTCT#127                                                      /OSC  20
                        BKG1#132                                                       /OSC  21
                        BKG2#135                                                       /OSC  22
                        TMP#127                 /REFLECTION NUMBER FOR OUTPUT          /OSC  23
                /LOCATIONS OF PERMANENT CONSTANTS                                      /OSC  24
                        ACCCT#173                                                      /OSC  25
                        COMG#4470                                                      /OSC  26
                        CREC#1146                                                      /OSC  27
                        CTTH#4465                                                      /OSC  28
                        DCOLL#643                                                      /OSC  29
                        DOMG#640                                                       /OSC  30
                        DTCST#606                                                      /OSC  31
                        FACTOR#2426                                                    /OSC  32
                        FH#4454                                                        /OSC  33
                        FP500#2433                                                     /OSC  34
                        LCODE#161                                                      /OSC  35
                        LCRLF#165                                                      /OSC  36
                        LFIX#34                                                        /OSC  37
                        LFNP#26                                                        /OSC  38
                        LFOP#27                                                        /OSC  39
                        LFPT#7                                                         /OSC  40
                        LGET#75                                                        /OSC  41
                        LIOUT#64                                                       /OSC  42
                        LMOTOR#162                                                     /OSC  43
                        LOMGA#66                                                       /OSC  44
                        LPRNT#144                                                      /OSC  45
                        LPUT#76                                                        /OSC  46
                        LWMDT#167                                                      /OSC  47
                        MIO#1575                                                       /OSC  48
                        MOTSET#531                                                     /OSC  49
                        MTHR#156                                                       /OSC  50
                        NREFL#2766                                                     /OSC  51
                        NSTP#756                                                       /OSC  52
                        OMG#627                                                        /OSC  53
                        OMGA#210                                                       /OSC  54
                        ONE#146                                                        /OSC  55
                        RTMC#667                                                       /OSC  56
                        SCAN#711                                                       /OSC  57
                        SHUTK#2776                                                     /OSC  58
                        SHUTR#2446                                                     /OSC  59
                        TEN#7450                                                       /OSC  60
                        THR#154                                                        /OSC  61
                        TWO#151                                                        /OSC  62
                        VFOUT#7200                                                     /OSC  63
                        ZERO#5107                                                      /OSC  64
                /CONSTANTS FOR TRANSFER TO COMMON STORAGE---PERMANENT LOCATIONS        /OSC  65
                        *3054                                                          /OSC  66
3054  7761      BLOCKA, -17                                                            /OSC  67
3055     0              00                  /NOT USED        100                      /OSC  68
3056  7200              VFOUT               /LVFOUT          101                      /OSC  69
3057   756              NSTP                /LNSTP           102                      /OSC  70
3060   640              DOMG                /LDOMG           103                      /OSC  71
3061   531              MOTSET              /LMTSET          104                      /OSC  72
3062   643              DCOLL               /LDCOLL          105                      /OSC  73
3063   667              RTMC                /LRTMC           106                      /OSC  74
3064  2426              FACTOR              /LFCTR           107                      /OSC  75
3065  4470              COMG                /LCOMG           110                      /OSC  76
3066  4065              BW                  /LBW             111                      /OSC  77
3067  2766              NREFL               /LNREFL          112                      /OSC  78
3070  5107              ZERO                /LZERO           113                      /OSC  79
3071  1146              CREC                /LCREC           114                      /OSC  80
3072  2446              SHUTR               /LSHUTR          115                      /OSC  81
3073  2776              SHUTK               /LSHUTK          116                      /OSC  82
```

```
                /SUBROUTINE DATA FOR OMEGA SCANNING AND BKG MEAS WITH OFFSET COUNTER    /OSC  83
                *3600                                                                   /OSC  84
3600     0  DATA,  0                                                                   /OSC  85
3601  4475         JMS I LGET          /GET CONSTANTS IN COMMON STORAGE                /OSC  86
3602  3054         BLOCKA                                                              /OSC  87
3603  4476         JMS I LPUT          /PUT AWAY COMMON STORAGE                        /OSC  88
3604  4407         JMS I LFPT                                                          /OSC  89
3605  5513         FGET I LZERO        /SET CALC OMEGA TO ZERO                         /OSC  90
3606  6510         FPUT I LCOMG                                                        /OSC  91
3607     0         FEXT                                                                /OSC  92
3610  4544         JMS I LPRNT         /PRINT SHARP I                                  /OSC  93
3611  4311         4311                                                                /OSC  94
3612  4744         JMS I LFIOUT        /PRINT H, K, L                                  /OSC  95
3613  7775         -3                                                                  /OSC  96
3614  4454         FH                                                                  /OSC  97
3615     4         4                                                                   /OSC  98
3616  4427         JMS I LFOP          /PRINT ANGLES                                   /OSC  99
3617  7774         -4                                                                  /OSC 100
3620  4465  LCTTH, CTTH                                                                /OSC 101
3621  4407         JMS I LFPT                                                          /OSC 102
3622  5511         FGET I LBW          /SET CALC OMEGA TO STARTING POINT               /OSC 103
3623  6510         FPUT I LCOMG                                                        /OSC 104
3624     0         FEXT                                                                /OSC 105
3625  4315         JMS SCANX           /MAKE SCAN FOR PEAK                             /OSC 106
3626  4407         JMS I LFPT                                                          /OSC 107
3627  5173         FGET ACCCT          /SAVE COUNT                                     /OSC 108
3630  6127         FPUT TOTCT                                                          /OSC 109
3631  5620         FGET I LCTTH        /OFF-SET COUNTER FOR 1ST BKG                    /OSC 110
3632  2743         FSUB I LDELTA                                                       /OSC 111
3633  6620         FPUT I LCTTH                                                        /OSC 112
3634     0         FEXT                                                                /OSC 113
3635  4315         JMS  SCANX          /MAKE SCAN FOR LOW ANGLE BKG                    /OSC 114
3636  4407         JMS I LFPT                                                          /OSC 115
3637  5173         FGET ACCCT          /SAVE COUNT                                     /OSC 116
3640  6132         FPUT BKG1                                                           /OSC 117
3641  5620         FGET I LCTTH        /OFF-SET COUNTER FOR SECOND BKG                 /OSC 118
3642  1743         FADD I LDELTA                                                       /OSC 119
3643  1743         FADD I LDELTA                                                       /OSC 120
3644  6620         FPUT I LCTTH                                                        /OSC 121
3645     0         FEXT                                                                /OSC 122
3646  4315         JMS SCANX           /MAKE SCAN FOR HIGH ANGLE BACKGROUND            /OSC 123
3647  4407         JMS I LFPT                                                          /OSC 124
3650  5173         FGET ACCCT          /SAVE COUNT                                     /OSC 125
3651  6135         FPUT BKG2                                                           /OSC 126
3652  1132         FADD BKG1           /CALCULATE NET COUNT                            /OSC 127
3653  4151         FDIV TWO                                                            /OSC 128
3654     6         FNEG                                                                /OSC 129
3655  1127         FADD TOTCT                                                          /OSC 130
3656  6121         FPUT NTCNT                                                          /OSC 131
3657  5132         FGET BKG1           /CALCULATE STANDARD ERROR                       /OSC 132
3660  1135         FADD BKG2                                                           /OSC 133
3661  4151         FDIV TWO                                                            /OSC 134
3662  4151         FDIV TWO                                                            /OSC 135
3663  1127         FADD TOTCT                                                          /OSC 136
3664     2         FSQT                                                                /OSC 137
3665  6124         FPUT SIG                                                            /OSC 138
3666  5512         FGET I LNREFL       /INCREMENT REFLECTION NUMBER                    /OSC 139
3667  1146         FADD ONE                                                            /OSC 140
3670  6512         FPUT I LNREFL                                                       /OSC 141
3671  6127         FPUT TMP                                                            /OSC 142
3672     0         FEXT                                                                /OSC 143
3673  4565         JMS I LCRLF         /START PRINTING RESULTS                         /OSC 144
3674  4544         JMS I LPRNT                                                         /OSC 145
3675  4322         4322                /SHARP R                                        /OSC 146
3676  1502         TAD I LNSTP                                                         /OSC 147
3677  4464         JMS I LIOUT         /NSTP                                           /OSC 148
3700  4744         JMS I LFIOUT        /NTCNT, SIG, NREFL, BKG1, BGK2                  /OSC 149
3701  7773         -5                                                                  /OSC 150
3702   121         NTCNT                                                               /OSC 151
3703     7         7                                                                   /OSC 152
3704  1347         TAD MIN8            /MARK END OF REFL ON CHART                      /OSC 153
3705  4514         JMS I LCREC                                                         /OSC 154
3706  4565         JMS I LCRLF                                                         /OSC 155
3707  4565         JMS I LCRLF                                                         /OSC 156
3710  1345         TAD IBRK            /TEST FOR /ID                                   /OSC 157
3711  7650         SNA CLA                                                             /OSC 158
3712  5600  RSTRT, JMP I DATA          /NO. RETURN                                     /OSC 159
3713  3345         DCA IBRK            /YES. CLEAR INDICATOR                           /OSC 160
3714  5466         JMP I LOMGA         /JUMP TO WAITING LOOP                           /OSC 161
3715     0  SCANX, 0                   /SUBROUTINE TO MAKE OMEGA SCAN                  /OSC 162
3716  4561         JMS I LCODE         /START MOTOR SET AUDIO                          /OSC 163
```

```
3717  7340          7340                                                    /OSC 164
3720  7340          7340                                                    /OSC 165
3721  4504          JMS I LMTSET        /START MOTORS                       /OSC 166
3722  4567          JMS I LWMOT         /WAIT UNTIL SET IS COMPLETE         /OSC 167
3723  4561          JMS I LCODE         /START COUNTING AUDIO               /OSC 168
3724  7272          7272                                                    /OSC 169
3725     0          0000                                                    /OSC 170
3726  7001          IAC                                                     /OSC 171
3727  4515          JMS I LSHUTR        /OPEN SHUTTER                       /OSC 172
3730  1346          TAD MIN5            /WAIT HALF SECOND                   /OSC 173
3731  3516          DCA I LSHUTK                                            /OSC 174
3732  1516          TAD I LSHUTK                                            /OSC 175
3733  7640          SZA CLA                                                 /OSC 176
3734  5332          JMP .-2                                                 /OSC 177
3735  4505          JMS I LDCOLL        /ENTER COUNT AND STEP ROUTINE       /OSC 178
3736  4304          4304                /PRINT SHARP D                      /OSC 179
3737  4515          JMS I LSHUTR        /CLOSE SHUTTER                      /OSC 180
3740  1347          TAD MIN8            /MARK CHART                         /OSC 181
3741  4514          JMS I LCREC                                             /OSC 182
3742  5715          JMP I SCANX         /RETURN                             /OSC 183
3743  4062  LDELTA, DELTA                                                   /OSC 184
3744  4141  LFIOUT, FIOUT                                                   /OSC 185
3745     0  IBRK,   0                                                       /OSC 186
3746  7773  MIN5,   -5                                                      /OSC 187
3747  7770  MIN8,   -10                                                     /OSC 188
            /INITIALIZING ROUTINE FOR OMEGA SCAN DATA COLLECTION            /OSC 189
            /KEYBOARD SIGNAL IS /SW                                         /OSC 190
            /INPUT IS COUNTING TIME, CHART FULL SCALE, COUNTER OFFSET,BASE WIDTH,  /OSC 191
            /         AND OMEGA STEP SIZE.                                  /OSC 192
            *4000                                                           /OSC 193
4000  4475  INDTCL, JMS I LGET                                              /OSC 194
4001  3054          BLOCKA                                                  /OSC 195
4002  4476          JMS I LPUT                                              /OSC 196
4003  4426          JMS I LFNP          /READ TIME, SCALE, CNTR OFFSET, BASE WIDTH /OSC 197
4004  7774          -4                                                      /OSC 198
4005  4054          TIME                                                    /OSC 199
4006  4407          JMS I LFPT                                              /OSC 200
4007  5254          FGET TIME           /COMPUTE NEG. OF COUNT TIME IN TENTHS SEC. /OSC 201
4010  3650          FMPY I LTEN                                             /OSC 202
4011  6254          FPUT TIME                                               /OSC 203
4012  1251          FADD ONEHF                                              /OSC 204
4013     0          FEXT                                                    /OSC 205
4014  4434          JMS I LFIX                                              /OSC 206
4015  7041          CIA                                                     /OSC 207
4016  3506          DCA I LRTMC                                             /OSC 208
4017  4426          JMS I LFNP          /READ OMEGA STEP SIZE               /OSC 209
4020  7777          -1                                                      /OSC 210
4021   640          DOMG                                                    /OSC 211
4022  1275          TAD LOMG            /SET RATE METER PROGRAM TO PRINT OMEGA /OSC 212
4023  3676          DCA I LSCAN                                             /OSC 213
4024  4407          JMS I LFPT                                              /OSC 214
4025  5670          FGET I LF500        /COMPUTE RATEMETER SCALE CONSTANT   /OSC 215
4026  4257          FDIV SCALE                                              /OSC 216
4027  6507          FPUT I LFCTR                                            /OSC 217
4030  5271          FGET DEDTM          /COMPUTE CONST. FOR DEAD TIME CORRECTION /OSC 218
4031  4254          FDIV TIME                                               /OSC 219
4032  6674          FPUT I LDTCST                                           /OSC 220
4033  5265          FGET BW             /COMPUTE NO. STEPS IN SCAN          /OSC 221
4034  4503          FDIV I LDOMG                                            /OSC 222
4035  1251          FADD ONEHF                                              /OSC 223
4036     0          FEXT                                                    /OSC 224
4037  4434          JMS I LFIX                                              /OSC 225
4040  3502          DCA I LNSTP                                             /OSC 226
4041  4407          JMS I LFPT                                              /OSC 227
4042  5265          FGET BW             /COMPUTE INITIAL OMEGA OFFSET       /OSC 228
4043  4151          FDIV TWO                                                /OSC 229
4044     6          FNEG                                                    /OSC 230
4045  6265          FPUT BW                                                 /OSC 231
4046     0          FEXT                                                    /OSC 232
4047  5466          JMP I LOMGA         /RETURN TO WAITING LOOP             /OSC 233
4050  7450  LTEN,   TEN                                                     /OSC 234
4051     0  ONEHF,  0                                                       /OSC 235
4052  2000          2000                                                    /OSC 236
4053     0          0                                                       /OSC 237
4054     0  TIME,   0                                                       /OSC 238
4055     0          0                                                       /OSC 239
4056     0          0                                                       /OSC 240
4057     0  SCALE,  0                                                       /OSC 241
4060     0          0                                                       /OSC 242
4061     0          0                                                       /OSC 243
4062     0  DELTA,  0                                                       /OSC 244
```

```
4063     0          0                                                    /OSC 245
4064     0          0                                                    /OSC 246
4065     0  BW,     0                                                    /OSC 247
4066     0          0                                                    /OSC 248
4067     0          0                                                    /OSC 249
4070  2433  LF500,  FP500                                                /OSC 250
4071  7762  DEDTM,  7762                                                 /OSC 251
4072  2364          2364                                                 /OSC 252
4073  2665          2665                                                 /OSC 253
4074   606  LDTCST, DTCST                                                /OSC 254
4075   627  LOMG,   OMG                                                  /OSC 255
4076   711  LSCAN,  SCAN                                                 /OSC 256
4077   667  ARTMC,  RTMC                                                 /OSC 257
            /SUBROUTINE TO OUTPUT SEQUENCE OF FOATING NUMBERS AS INTEGERS OF  /OSC 258
            /      SPECIFIED LENGTH                                      /OSC 259
                   *4141                                                 /OSC 260
4141     0  FIOUT,  0                                                    /OSC 261
4142  1741          TAD I FIOUT          /PICK UP -NO. OF OUTPUTS         /OSC 262
4143  3367          DCA TXX                                               /OSC 263
4144  2341          ISZ FIOUT                                             /OSC 264
4145  1741          TAD I FIOUT          /PICK UP ADDRESS OF FIRST NUMBER /OSC 265
4146  3370          DCA TXY                                               /OSC 266
4147  2341          ISZ FIOUT                                             /OSC 267
4150  1741          TAD I FIOUT          /PICK UP SIZE OF INTEGER         /OSC 268
4151  3357          DCA FNT2                                              /OSC 269
4152  2341          ISZ FIOUT            /PREPARE RETURN ADDRESS          /OSC 270
4153  4407  FNT1,   JMS I LFPT                                            /OSC 271
4154  5770          FGET I TXY           /GET NUMBER                      /OSC 272
4155     0          FEXT                                                  /OSC 273
4156  4501          JMS I LVFOUT         /ENTER VARIABLE FORMAT OUTPUT    /OSC 274
4157     0  FNT2,   0                    /VARIABLE WORD # SIZE OF OUTPUT FORMAT  /OSC 275
4160     0          0                                                     /OSC 276
4161  1370          TAD TXY              /ADVANCE ADDRESS OF NUMBER       /OSC 277
4162  1154          TAD THR                                               /OSC 278
4163  3370          DCA TXY                                               /OSC 279
4164  2367          ISZ TXX              /ADVANCE COUNTER. IS IT ZERO     /OSC 280
4165  5353          JMP FNT1             /NO. GET ANOTHER NUMBER          /OSC 281
4166  5741          JMP I FIOUT          /YES. RETURN                     /OSC 282
4167     0  TXX,    0                    /COUNTER                         /OSC 283
4170     0  TXY,    0                    /ADDRESS OF NUMBER               /OSC 284
            /MISCELLANEOUS CHANGES FOR OMEGA SCANNING PROGRAM             /OSC 285
                   *2225                                                 /OSC 286
2225  2327          2327                 /SW. SET UP FOR OMEGA SCANS      /OSC 287
2226  4000          INDTCL                                                /OSC 288
                   *2213                                                 /OSC 289
2213     0          0000                 /REMOVE /ST SIGNAL               /OSC 290
2214   210          OMGA                                                  /OSC 291
                   *4110                                                 /OSC 292
4110  5257          FGET SCALE           /CHANGE FOR /PS                  /OSC 293
                   *2757                                                 /OSC 294
2757  3745  LIBRK,  IBRK                 /LOCATION OF /ID FLAG            /OSC 295
                   *2230                                                 /OSC 296
2230  3712          RSTRT                /LOCATION OF /RD TRANSFER        /OSC 297
                   *720                                                  /OSC 298
 720  5227          FGET OMG             /CHANGES IN DCOLL                /OSC 299
 721  1240          FADD DOMG            /INCREMENT OMEGA                 /OSC 300
 722  6227          FPUT OMG                                              /OSC 301
 723     0          FEXT                                                  /OSC 302
 724  4562          JMS I LMOTOR         /STEP OMEGA                      /OSC 303
 725  1575          MIO                                                   /OSC 304


            /FAST PEAK-TOP DATA PROGRAM                                   /PKT   1
            /MODIFICATION OF DATA COLLECTION PROGRAM                      /PKT   2
            /LOCATIONS OF CONSTANTS AND VARIABLES                         /PKT   3
                   ACCONT#173                                             /PKT   4
                   CHART#761                                              /PKT   5
                   CREC#1146                                              /PKT   6
                   CTTH#4465                                              /PKT   7
                   DCOLL#643                                              /PKT   8
                   DTCST#606                                              /PKT   9
                   DTTH#640                                               /PKT  10
                   FACTOR#2426                                            /PKT  11
                   FH#4454                                                /PKT  12
                   HORD#45                                                /PKT  13
                   LCODE#161                                              /PKT  14
                   LFIX#34                                                /PKT  15
                   LCRLF#165                                              /PKT  16
                   LGET#75                                                /PKT  17
                   LFLT#71                                                /PKT  18
```

```
                 LFNP#26                                                    /PKT  19
                 LFOP#27                                                    /PKT  20
                 LFPT#7                                                     /PKT  21
                 LINTIN#73                                                  /PKT  22
                 LOMGA#66                                                   /PKT  23
                 LPRNT#144                                                  /PKT  24
                 LPUT#76                                                    /PKT  25
                 LWMOT#167                                                  /PKT  26
                 MOTSET#531                                                 /PKT  27
                 M7#5342                                                    /PKT  28
                 NSTP#756                                                   /PKT  29
                 OMGA#210                                                   /PKT  30
                 ONE#146                                                    /PKT  31
                 RTMC#667                                                   /PKT  32
                 SHUTK#2776                                                 /PKT  33
                 SHUTR#2446                                                 /PKT  34
                 SSK2#160                                                   /PKT  35
                 THR#154                                                    /PKT  36
                 TWO#151                                                    /PKT  37
                 VFOUT#7200                                                 /PKT  38
                 ZERO#5107                                                  /PKT  39
        /LOCATIONS IN COMMON STORAGE FROM BLOCKA                            /PKT  40
                 LBDEL#107                                                  /PKT  41
                 LCHART#125                                                 /PKT  42
                 LCREC#126                                                  /PKT  43
                 LCTST#106                                                  /PKT  44
                 LDELAY#121                                                 /PKT  45
                 LDTTH#105                                                  /PKT  46
                 LFIOUT#101                                                 /PKT  47
                 LIBRK#127                                                  /PKT  48
                 LMARK#124                                                  /PKT  49
                 LMTMIN#103                                                 /PKT  50
                 LMTSET#100                                                 /PKT  51
                 LNREFL#120                                                 /PKT  52
                 LNRJ#123                                                   /PKT  53
                 LRATE#110                                                  /PKT  54
                 LRB#111                                                    /PKT  55
                 LRSD#112                                                   /PKT  56
                 LSDEL#116                                                  /PKT  57
                 LSHUTR#122                                                 /PKT  58
                 LT#113                                                     /PKT  59
                 LTHOUS#117                                                 /PKT  60
                 LTMAX#115                                                  /PKT  61
                 LTTHB#102                                                  /PKT  62
                 LVAR#114                                                   /PKT  63
                 LZERO#104                                                  /PKT  64
                 *2547                /BLOCKA, CONSTANTS FOR TRANSFER TO COMMON  /PKT  65
2547  7750 BLOCKA, -30                                                      /PKT  66
2550   531       MOTSET               /LMTSET   100                         /PKT  67
2551  4152       FIOUT                /LFIOUT   101                         /PKT  68
2552  4123       TTHB                 /LTTHB    102                         /PKT  69
2553  4142       MTMIN                /LMTMIN   103                         /PKT  70
2554  5107       ZERO                 /LZERO    104                         /PKT  71
2555   640       DTTH                 /LDTTH    105                         /PKT  72
2556  4007       CTST                 /LCTST    106                         /PKT  73
2557  4076       BDEL                 /LBDEL    107                         /PKT  74
2560  4107       RATE                 /LRATE    110                         /PKT  75
2561  4131       RB                   /LRB      111                         /PKT  76
2562  4070       RSD                  /LRSD     112                         /PKT  77
2563  4126       T                    /LT       113                         /PKT  78
2564  4112       VAR                  /LVAR     114                         /PKT  79
2565  4073       TMAX                 /LTMAX    115                         /PKT  80
2566  4101       SDEL                 /LSDEL    116                         /PKT  81
2567  4134       THOUS                /LTHOUS   117                         /PKT  82
2570  4115       NREFL                /LNREFL   120                         /PKT  83
2571  2260       DELAY                /LDELAY   121                         /PKT  84
2572  2446       SHUTR                /LSHUTR   122                         /PKT  85
2573  4120       NRJ                  /LNRJ     123                         /PKT  86
2574  5371       MARK                 /LMARK    124                         /PKT  87
2575   761       CHART                /LCHART   125                         /PKT  88
2576  1146       CREC                 /LCREC    126                         /PKT  89
2577  4151       IBRK                 /LIBRK    127                         /PKT  90
                 *3600                                                      /PKT  91
3600     0 DATA, 0                                                          /PKT  92
3601  4475       JMS I LGET           /TRANSFER CONSTANTS TO COMMON         /PKT  93
3602  2547       BLOCKA                                                     /PKT  94
3603  4476       JMS I LPUT                                                 /PKT  95
3604  4500       JMS I LMTSET                                               /PKT  96
3605  4561       JMS I LCODE                                                /PKT  97
3606  6550       6550                                                       /PKT  98
3607  6550       6550                                                       /PKT  99
```

```
3610  4565          JMS I LCRLF        /PRINT CR, LF                          /PKT 100
3611  4544          JMS I LPRNT        /PRINT #I                              /PKT 101
3612  4311          4311                                                      /PKT 102
3613  4501          JMS I LFIOUT       /PRINT INDEXES                         /PKT 103
3614  7775          -3                                                        /PKT 104
3615  4454          FH                                                        /PKT 105
3616  4427          JMS I LFOP         /PRINT ANGLES                          /PKT 106
3617  7774          -4                                                        /PKT 107
3620  4465  LCTTH,  CTTH                                                      /PKT 108
3621  4407          JMS I LFPT                                                /PKT 109
3622  5620          FGET I LCTTH       /SAVE BRAGG ANGLE                      /PKT 110
3623  6502          FPUT I LTTHB                                              /PKT 111
3624  5504          FGET I LZERO       /SET 2-THETA INCREMENT TO ZERO         /PKT 112
3625  6757          FPUT I LTC         /TC # SAMPLING TIME                    /PKT 113
3626  6505          FPUT I LDTTH                                              /PKT 114
3627     0          FEXT                                                      /PKT 115
3630  4567          JMS I LWMOT                                               /PKT 116
3631  7001          IAC                /OPEN SHUTTER                          /PKT 117
3632  4522          JMS I LSHUTR                                              /PKT 118
3633  1160          TAD SSK2                                                  /PKT 119
3634  4521          JMS I LDELAY       /WAIT 0.4 SEC                          /PKT 120
3635  4506          JMS I  LCTST       /CALL SR TO SET UP AND SAMPLE PEAK TOP /PKT 121
3636     0          0                                                         /PKT 122
3637  4407          JMS I LFPT                                                /PKT 123
3640  5620          FGET I LCTTH       /SET 2-THETA FOR BACKGROUND SAMPLE     /PKT 124
3641  2507          FSUB I LBDEL                                              /PKT 125
3642  6620          FPUT I LCTTH                                              /PKT 126
3643  5510          FGET I LRATE       /RATE # OBSERVED CR OBTAINED IN SR CTST /PKT 127
3644  6511          FPUT I LRB         /RB # SAMPLED PEAK RATE                /PKT 128
3645     0          FEXT                                                      /PKT 129
3646  4506          JMS I  LCTST       /CALL SR TO SET UP AND SAMPLE BACKGROUND /PKT 130
3647     0          0                                                         /PKT 131
3650  4407          JMS I LFPT                                                /PKT 132
3651  5507          FGET I LBDEL       /SET 2-THETA INCREMENT FOR 1-STEP BKG SCAN /PKT 133
3652  1507          FADD I LBDEL                                              /PKT 134
3653  6505          FPUT I LDTTH                                              /PKT 135
3654  5504          FGET I LZERO       /CLEAR VARIANCE                        /PKT 136
3655  6514          FPUT I LVAR                                               /PKT 137
3656  5510          FGET I LRATE                                              /PKT 138
3657  2511          FSUB I LRB                                                /PKT 139
3660  6757          FPUT I LTC         /TC TEMPORILY USED FOR NEG OF NET RATE /PKT 140
3661     0          FEXT                                                      /PKT 141
3662  1045          TAD HORD                                                  /PKT 142
3663  7700          SMA CLA                                                   /PKT 143
3664  5370          JMP DATA2          /IF NET RATE NOT POSITIVE, GO TO DATA2 /PKT 144
3665  4407          JMS I LFPT                                                /PKT 145
3666  5510          FGET I LRATE                                              /PKT 146
3667     2          FSQT                                                      /PKT 147
3670  6510          FPUT I LRATE       /RATE # SQRT BKG RATE                  /PKT 148
3671  5511          FGET I LRB                                                /PKT 149
3672     2          FSQT                                                      /PKT 150
3673  1510          FADD I LRATE                                              /PKT 151
3674  4757          FDIV I LTC                                                /PKT 153
3675  6511          FPUT I LRB         /RB   # SUM ROOTS OF PEAK AND BKG RATES /PKT 152
3676  4512          FDIV I LRSD        /RSD # DESIRED RELATIVE ST DEV         /PKT 154
3677  6513          FPUT I LT                                                 /PKT 155
3700  3513          FMPY I LT                                                 /PKT 156
3701  6513          FPUT I LT          /T # TOTAL TIME FOR REFLECTION         /PKT 157
3702  3510          FMPY I LRATE                                              /PKT 158
3703  4511          FDIV I LRB                                                /PKT 159
3704  6757          FPUT I LTC         /TC # TIME TO BE USED FOR BKG          /PKT 160
3705  5513          FGET I LT                                                 /PKT 161
3706  2515          FSUB I LTMAX                                              /PKT 162
3707     0          FEXT                                                      /PKT 163
3710  1045          TAD HORD                                                  /PKT 164
3711  7700          SMA CLA                                                   /PKT 165
3712  5370          JMP DATA2          /IF TIME TOO LONG, GO TO DATA2         /PKT 166
3713  4506  DATA3,  JMS I LCTST        /CALL SR TO SET UP AND COUNT 2 BKGS    /PKT 167
3714     1          1                                                         /PKT 168
3715  4407          JMS I LFPT                                                /PKT 169
3716  5510          FGET I LRATE                                              /PKT 170
3717  6511          FPUT I LRB         /STORE OBSERVED BKG COUNTING RATE      /PKT 171
3720  5502          FGET I LTTHB                                              /PKT 172
3721  2516          FSUB I LSDEL                                              /PKT 173
3722  6620          FPUT I LCTTH       /SET 2-THETA FOR 2-STEP PEAK SCAN      /PKT 174
3723  5516          FGET I LSDEL       /       (3 COUNT POSITIONS)            /PKT 175
3724  6505          FPUT I LDTTH       /SET 2-THETA INCREMENT                 /PKT 176
3725  5757          FGET I LTC                                                /PKT 177
3726  6502          FPUT I LTTHB       /TTHB # ACTUAL BKG COUNTING TIME        /PKT 178
3727  5513          FGET I LT                                                 /PKT 179
3730  2757          FSUB I LTC                                                /PKT 180
```

```
3731  6757          FPUT I LTC          /TC # TIME TC BE USED FOR PEAK          /PKT 181
3732     0          FEXT                                                       /PKT 182
3733  4506          JMS I  LCTST        /CALL SR TO SET UP AND SCAN PEAK       /PKT 183
3734     2          2                                                          /PKT 184
3735  4407          JMS I LFPT          /PROCESS RESULTS                       /PKT 185
3736  5510          FGET I LRATE        /RATE # OBSERVED PEAK RATE             /PKT 186
3737  2511          FSUB I LRB                                                 /PKT 187
3740  3517          FMPY I LTHOUS                                              /PKT 188
3741  6510          FPUT I LRATE        /RATE # 1000 * NET RATE                /PKT 189
3742  5514          FGET I LVAR                                                /PKT 190
3743     2          FSQT                                                       /PKT 191
3744  3517          FMPY I LTHOUS                                              /PKT 192
3745  6514          FPUT I LVAR         /VAR # 1000 * SIG(NET RATE)            /PKT 193
3746  5520          FGET I LNREFL       /ADVANCE REFLECTION NUMBER             /PKT 194
3747  1146          FADD    ONE                                                /PKT 195
3750  6520          FPUT I LNREFL                                              /PKT 196
3751     0          FEXT                                                       /PKT 197
3752  4565          JMS I LCRLF                                                /PKT 198
3753  4544          JMS I LPRNT         /PRINT #R                              /PKT 199
3754  4322          4322                                                       /PKT 200
3755  4501          JMS I LFIOUT        /PUT OUT TC, RATE, VAR, NREFL, NRJ, TTHB /PKT 201
3756  7772          -6                                                         /PKT 202
3757  4104  LTC,    TC                                                         /PKT 203
3760  4565          JMS I LCRLF                                                /PKT 204
3761  4522  DATA1,  JMS I LSHUTR        /CLOSE SHUTTER                         /PKT 205
3762  4524          JMS I LMARK                                                /PKT 206
3763  1527          TAD I LIBRK         /TEST FOR /ID INDICATION               /PKT 207
3764  7650          SNA CLA                                                    /PKT 208
3765  5600  RSTRT,  JMP I DATA          /RETURN TC MAIN PROGRAM                /PKT 209
3766  3527          DCA I LIBRK                                                /PKT 210
3767  5466          JMP I LOMGA                                                /PKT 211
3770  4407  DATA2,  JMS I LFPT          /REFLECTION WEAK. SET COUNTING         /PKT 212
3771  5504          FGET I  LZERO       /     TIME TC MINIMUM VALUE            /PKT 213
3772  6513          FPUT I LT                                                  /PKT 214
3773  6757          FPUT I  LTC                                                /PKT 215
3774     0          FEXT                                                       /PKT 216
3775  5361          JMP DATA1                                                  /PKT 217
                    *4000                                                      /PKT 218
4000  4426  INDTCL, JMS I LFNP          /READ FSFTR, RSD, TMAX, BDEL, SDEL     /PKT 219
4001  7773          -5                  /       ON KEYBOARD SIGNAL /PK         /PKT 220
4002  4065          FSFTR                                                      /PKT 221
4003  4473          JMS I LINTIN        /READ MINIMUM COUNTING TIME IN TENTHS SEC. /PKT 222
4004  7041          CIA                                                        /PKT 223
4005  3342          DCA MTMIN                                                  /PKT 224
4006  5466          JMP I LOMGA                                                /PKT 225
            /SET UP AND EXECUTE COUNT-STEP AND PROCESS RESULT                  /PKT 226
4007     0  CTST,   0                                                          /PKT 227
4010  4500          JMS I LMTSET                                               /PKT 228
4011  1607          TAD I CTST                                                 /PKT 229
4012  3743          DCA I LNSTP                                                /PKT 230
4013  1607          TAD I CTST                                                 /PKT 231
4014  7001          IAC                                                        /PKT 232
4015  4471          JMS I LFLT                                                 /PKT 233
4016  4407          JMS I LFPT                                                 /PKT 234
4017  6307          FPUT    RATE        /RATE # NS + 1 # NUMBER OF COUNT POSITIONS /PKT 235
4020  5304          FGET    TC                                                 /PKT 236
4021  4307          FDIV    RATE                                               /PKT 237
4022     0          FEXT                                                       /PKT 238
4023  4434          JMS I LFIX                                                 /PKT 239
4024  1342          TAD MTMIN           /IF TIME FOR COUNT LESS THAN MIN,      /PKT 240
4025  7510          SPA                 /       THEN SET TC MIN                /PKT 241
4026  7610          SKP CLA                                                    /PKT 242
4027  7041          CIA                                                        /PKT 243
4030  1342          TAD MTMIN                                                  /PKT 244
4031  3746          DCA I LRTMC                                                /PKT 245
4032  1746          TAD I LRTMC                                                /PKT 246
4033  7041          CIA                                                        /PKT 247
4034  4471          JMS I LFLT          /COMPUTE ACTUAL TIME IN SCAN           /PKT 248
4035  4407          JMS I LFPT                                                 /PKT 249
4036  6304          FPUT    TC          /TC # TIME PER COUNT POSITION          /PKT 250
4037  5337          FGET    DEDTM       /SET DEAD TIME CORRECTION FACTOR       /PKT 251
4040  4304          FDIV    TC                                                 /PKT 252
4041  6744          FPUT I LDTCST                                              /PKT 253
4042  5265          FGET    FSFTR       /SET CHART SCALE FACTOR                /PKT 254
4043  4304          FDIV    TC                                                 /PKT 255
4044  6745          FPUT I LFCTR                                               /PKT 256
4045  5304          FGET    TC          /SET COUNTING TIME CONSTANT            /PKT 257
4046  3307          FMPY    RATE                                               /PKT 258
4047  6304          FPUT    TC          /TC # TOTAL TIME IN SCAN               /PKT 259
4050     0          FEXT                                                       /PKT 260
4051  4567          JMS I LWMOT                                                /PKT 261
```

```
4052  4747          JMS I LDCOLL                                                    /PKT 262
4053  4407          JMS I LFPT                                                      /PKT 263
4054  5173          FGET ACCCNT                                                     /PKT 264
4055  4304          FDIV     TC                                                     /PKT 265
4056  6307          FPUT     RATE          /RATE # OBSERVED COUNTING RATE            /PKT 266
4057  4304          FDIV     TC                                                     /PKT 267
4060  1312          FADD     VAR                                                    /PKT 268
4061  6312          FPUT     VAR                                                    /PKT 269
4062     0          FEXT                                                            /PKT 270
4063  2207          ISZ CTST                                                        /PKT 271
4064  5607          JMP I CTST                                                      /PKT 272
4065     0  FSFTR,  0                                                               /PKT 273
4066     0          0                                                               /PKT 274
4067     0          0                                                               /PKT 275
4070     0  RSD,    0                                                               /PKT 276
4071     0          0                                                               /PKT 277
4072     0          0                                                               /PKT 278
4073     0  TMAX,   0                                                               /PKT 279
4074     0          0                                                               /PKT 280
4075     0          0                                                               /PKT 281
4076     0  BDEL,   0                                                               /PKT 282
4077     0          0                                                               /PKT 283
4100     0          0                                                               /PKT 284
4101     0  SDEL,   0                                                               /PKT 285
4102     0          0                                                               /PKT 286
4103     0          0                                                               /PKT 287
4104     0  TC,     0                                                               /PKT 288
4105     0          0                                                               /PKT 289
4106     0          0                                                               /PKT 290
4107     0  RATE,   0                                                               /PKT 291
4110     0          0                                                               /PKT 292
4111     0          0                                                               /PKT 293
4112     0  VAR,    0                                                               /PKT 294
4113     0          0                                                               /PKT 295
4114     0          0                                                               /PKT 296
4115     0  NREFL,  0                                                               /PKT 297
4116     0          0                                                               /PKT 298
4117     0          0                                                               /PKT 299
4120     0  NRJ,    0                                                               /PKT 300
4121     0          0                                                               /PKT 301
4122     0          0                                                               /PKT 302
4123     0  TTHB,   0                                                               /PKT 303
4124     0          0                                                               /PKT 304
4125     0          0                                                               /PKT 305
4126     0  T,      0                                                               /PKT 306
4127     0          0                                                               /PKT 307
4130     0          0                                                               /PKT 308
4131     0  RB,     0                                                               /PKT 309
4132     0          0                                                               /PKT 310
4133     0          0                                                               /PKT 311
4134    12  THOUS,  0012                                                            /PKT 312
4135  3720          3720                                                            /PKT 313
4136     0          0000                                                            /PKT 314
4137  7762  DEDTM,  7762                                                            /PKT 315
4140  2364          2364                                                            /PKT 316
4141  2665          2665                                                            /PKT 317
4142     0  MTMIN,  0                                                               /PKT 318
4143   756  LNSTP,  NSTP                                                            /PKT 319
4144   606  LDTCST, DTCST                                                           /PKT 320
4145  2426  LFCTR,  FACTOR                                                          /PKT 321
4146   667  LRTMC,  RTMC                                                            /PKT 322
4147   643  LDCOLL, DCOLL                                                           /PKT 323
4150  7200  LVFOUT, VFOUT                                                           /PKT 324
4151     0  IBRK,   0                                                               /PKT 325
            /SUBROUTINE TO OUTPUT SEQUENCE OF FOATING NUMBERS AS INTEGERS OF 7 CHAR./PKT 326
4152     0  FIOUT,  0                                                               /PKT 327
4153  1752          TAD I FIOUT          /PICK UP -NO. OF OUTPUTS                  /PKT 328
4154  3375          DCA TXX                                                        /PKT 329
4155  2352          ISZ FIOUT                                                      /PKT 330
4156  1752          TAD I FIOUT          /PICK UP ADDRESS OF FIRST NUMBER          /PKT 331
4157  3376          DCA TXY                                                        /PKT 332
4160  2352          ISZ FIOUT            /PREPARE RETURN ADDRESS                   /PKT 333
4161  4407  FNTI,   JMS I LFPT                                                     /PKT 334
4162  5776          FGET I TXY           /GET NUMBER                               /PKT 335
4163     0          FEXT                                                           /PKT 336
4164  4750          JMS I LVFOUT         /ENTER VARIABLE FORMAT OUTPUT             /PKT 337
4165     7          7                    /SIZE OF OUTPUT FORMAT                    /PKT 338
4166     0          0                                                              /PKT 339
4167  1376          TAD TXY              /ADVANCE ADDRESS OF NUMBER                /PKT 340
4170  1154          TAD THR                                                        /PKT 341
4171  3376          DCA TXY                                                        /PKT 342
```

```
4172  2375          ISZ TXX              /ADVANCE COUNTER. IS IT ZERO                /PKT 343
4173  5361          JMP FNT1             /NO. GET ANOTHER NUMBER                     /PKT 344
4174  5752          JMP I FIOUT          /YES. RETURN                                /PKT 345
4175     0  TXX,     0                   /COUNTER                                    /PKT 346
4176     0  TXY,     0                   /ADDRESS OF NUMBER                          /PKT 347
            /MISCELLANEOUS CHANGES                                                   /PKT 348
                     *660                                                            /PKT 349
 660  7000          NOP                                                             /PKT 350
 661  7000          NOP                                                             /PKT 351
 662  7000          NOP                                                             /PKT 352
 663  4567          JMS I LWMOT          /CHANGE LOC OF WAIT FOR MOTOR SET AND       /PKT 353
 664  7000          NOP                  /     REMOVE #D AND LINK WORD IN            /PKT 354
 665  7000          NOP                  /     CALLING SEQUENCE OF DCOLL             /PKT 355
                     *711                                                            /PKT 356
 711   624          624                  /SET TO PRINT 2-THETA                       /PKT 357
                     *734                                                            /PKT 358
 734  7000          NOP                  /REMOVE MOTOR WAIT                          /PKT 359
                     *751                                                            /PKT 360
                     NEXT#663             /CHANGE JMP FOR NEXT COUNT                  /PKT 361
 751  5263          JMP NEXT                                                        /PKT 362
                     *2213                                                           /PKT 363
2213     0          0000                 /REMOVE /ST                                 /PKT 364
2214   210          OMGA                                                            /PKT 365
                     *2217                /REMOVE /PS                                 /PKT 366
2217     0          0000                                                            /PKT 367
2220   210          OMGA                                                            /PKT 368
                     *2225                /ADD KEYBOARD SIGNAL /PK                    /PKT 369
2225  2013          2013                                                            /PKT 370
2226  4000          INDTCL                                                          /PKT 371
                     *2230                                                           /PKT 372
2230  3765          RSTRT                /CHANGE LOC OF RSTRT FOR /RC                /PKT 373
                     *2233                /CHANGE LOC OF /WA                          /PKT 374
2233  2701          2701                                                            /PKT 375
2234  7556          WAVE                                                            /PKT 376
                     *2260                                                           /PKT 377
2260     0  DELAY,   0                   /DELAY FOR SPECIFIED TIME # TO SECONDS      /PKT 378
2261  3666          DCA I LSHUTK         /ENTER WITH -10*TC IN ACC                   /PKT 379
2262  1666          TAD I LSHUTK                                                    /PKT 380
2263  7640          SZA CLA                                                         /PKT 381
2264  5262          JMP .-2                                                         /PKT 382
2265  5660          JMP I DELAY                                                     /PKT 383
2266  2776  LSHUTK, SHUTK                                                           /PKT 384
                     *2757                                                           /PKT 385
2757  4151          IBRK                 /CHANGE LOC OF IBRK FOR /IC                 /PKT 386
                     *2760                /INITIALIZE REFL AND REJECTION COUNTERS     /PKT 387
2760  4426          JMS I LFNP           /     ON KEYBOARD SIGNAL /IN                /PKT 388
2761  7776          -2                                                              /PKT 389
2762  4115  LNRFL,  NREFL                                                           /PKT 390
2763  4407          JMS I LFPT                                                      /PKT 391
2764  5762          FGET I LNRFL                                                    /PKT 392
2765  2146          FSUB ONE                                                        /PKT 393
2766  6762          FPUT I LNRFL                                                    /PKT 394
2767     0          FEXT                                                            /PKT 395
2770  5466          JMP I LOMGA                                                     /PKT 396
                     *3002                                                           /PKT 397
3002  7562          WVL                  /CHANGE LOC OF WAVELENGTH                   /PKT 398
3003  7565          A                    /     AND CELL EDGES IN CALC OF INDEX LMTS  /PKT 399
                     *4452                                                           /PKT 400
4452  7562          WVL                  /CHANGE LOC OF WAVELENGTH IN ANGLE(BISECT)  /PKT 401
                     *5371                                                           /PKT 402
5371     0  MARK,    0                   /SUBROUTINE TO MARK END OF REFLECTION       /PKT 403
5372  1525          TAD I LCHART                                                    /PKT 404
5373  7650          SNA CLA              /      ON CHART                             /PKT 405
5374  5771          JMP I MARK                                                      /PKT 406
5375  1342          TAD M7                                                          /PKT 407
5376  4526          JMS I LCREC                                                     /PKT 408
5377  5771          JMP I MARK                                                      /PKT 409
                     *7556                /READ WAVELENGTH AND CELL EDGES. CHANGED    /PKT 410
7556  4426  WAVE,   JMS I LFNP           /   LOC OF ROUTINE AND STORAGE.             /PKT 411
7557  7774          -4                                                              /PKT 412
7560  7562          WVL                                                             /PKT 413
7561  5466          JMP I LOMGA                                                     /PKT 414
7562     0  WVL,     0                                                             /PKT 415
7563     0           0                                                             /PKT 416
7564     0           0                                                             /PKT 417
7565     0  A,       0                                                             /PKT 418
7566     0           0                                                             /PKT 419
7567     0           0                                                             /PKT 420
7570     0  B,       0                                                             /PKT 421
7571     0           0                                                             /PKT 422
7572     0           0                                                             /PKT 423
7573     0  C,       0                                                             /PKT 424
7574     0           0                                                             /PKT 425
7575     0           0                                                             /PKT 426
```

```
/PROGRAM TO COLLECT DATA FOR SPECIFIED INDICES AND PSI          /PSI   1
                                                                /PSI   2
ACCCNT#173                                                      /PSI   3
BATN#5507                                                       /PSI   4
BKG1#106                                                        /PSI   5
CHECK#1025                                                      /PSI   6
COSTH#103                                                       /PSI   7
COUNT#170                                                       /PSI   8
CREC#1146                                                       /PSI   9
CTERR#2670                                                      /PSI  10
CTHI#2671                                                       /PSI  11
DCH#137                                                         /PSI  12
DPIOUT#7505                                                     /PSI  13
FACTOR#2426                                                     /PSI  14
FH#2547                                                         /PSI  15
FP500#2433                                                      /PSI  16
FTTH#103                                                        /PSI  17
HORD#45                                                         /PSI  18
HPHI#100                                                        /PSI  19
INDX#130                                                        /PSI  20
IOTREG#137                                                      /PSI  21
K90#5523                                                        /PSI  22
KCH#106                                                         /PSI  23
KCREG#134                                                       /PSI  24
KRNG#130                                                        /PSI  25
LADR#23                                                         /PSI  26
LCH#135                                                         /PSI  27
LCOP#24                                                         /PSI  28
LCRLF#165                                                       /PSI  29
LDAT#36                                                         /PSI  30
LENGTH#133                                                      /PSI  31
LFIX#34                                                         /PSI  32
LFLT#71                                                         /PSI  33
LFNK#5                                                          /PSI  34
LFNP#26                                                         /PSI  35
LFOP#27                                                         /PSI  36
LFPT#7                                                          /PSI  37
LINTIN#73                                                       /PSI  38
LIOUT#64                                                        /PSI  39
LIPCH#67                                                        /PSI  40
LMI#63                                                          /PSI  41
LMM#33                                                          /PSI  42
LMOTOR#162                                                      /PSI  43
LMV#25                                                          /PSI  44
LOMGA#66                                                        /PSI  45
LOPCH#70                                                        /PSI  46
LPRP#31                                                         /PSI  47
LTRN#32                                                         /PSI  48
LTSIN#65                                                        /PSI  49
LUNT#30                                                         /PSI  50
LV#4705                                                         /PSI  51
LWHERE#145                                                      /PSI  52
LWMOT#167                                                       /PSI  53
MB11#7600                                                       /PSI  54
MIC#1676                                                        /PSI  55
MIN4#143                                                        /PSI  56
MIO#1575                                                        /PSI  57
MIT#1476                                                        /PSI  58
MOTST#517                                                       /PSI  59
MTHR#156                                                        /PSI  60
MTWO#155                                                        /PSI  61
NS#136                                                          /PSI  62
NTCNT#117                                                       /PSI  63
OMGA#210                                                        /PSI  64
OMGD#114                                                        /PSI  65
ONE#146                                                         /PSI  66
OVRC#1667                                                       /PSI  67
PSI#2560                                                        /PSI  68
PSIM11#100                                                      /PSI  69
PSIM21#103                                                      /PSI  70
PSIM31#106                                                      /PSI  71
PSIM12#111                                                      /PSI  72
PSIM22#114                                                      /PSI  73
PSIM32#117                                                      /PSI  74
PSIM13#122                                                      /PSI  75
PSIM23#125                                                      /PSI  76
PSIM33#130                                                      /PSI  77
R#2245                                                          /PSI  78
R0#2751                                                         /PSI  79
R11#100                                                         /PSI  80
R21#103                                                         /PSI  81
```

```
            R31#106                                                    /PSI  82
            R12#111                                                    /PSI  83
            R22#114                                                    /PSI  84
            R32#117                                                    /PSI  85
            R13#122                                                    /PSI  86
            R23#125                                                    /PSI  87
            R33#130                                                    /PSI  88
            REC#2400                                                   /PSI  89
            RPHI#3767                                                  /PSI  90
            SAVE1#117                                                  /PSI  91
            SAVE2#122                                                  /PSI  92
            SAVE3#125                                                  /PSI  93
            SHUTR#2446                                                 /PSI  94
            SIGCNT#122                                                 /PSI  95
            SINC#130                                                   /PSI  96
            SINT#133                                                   /PSI  97
            STCT#2703                                                  /PSI  98
            STTH#100                                                   /PSI  99
            TCHI#133                                                   /PSI 100
            TEMP#114                                                   /PSI 101
            TEN#7450                                                   /PSI 102
            THETA#106                                                  /PSI 103
            THR#154                                                    /PSI 104
            TOTCNT#111                                                 /PSI 105
            TTHD#111                                                   /PSI 106
            TWO#151                                                    /PSI 107
            TY2#7544                                                   /PSI 108
            VFOUT#7200                                                 /PSI 109
            WTCT#2721                                                  /PSI 110
            WVL#7633                                                   /PSI 111
            X1#2245                                                    /PSI 112
            X2#2256                                                    /PSI 113
            X3#2267                                                    /PSI 114
                                                                       /PSI 115
            *4                                                         /PSI 116
  4   4000  LANG,   AZANG                                              /PSI 117
            *144                                                       /PSI 118
144   5371  LPRNT,  PRINT                                              /PSI 119
            *161                                                       /PSI 120
161      4  FOUR,   4                                                  /PSI 121
            *176                                                       /PSI 122
176   5107  ADZERO, 5107                                               /PSI 123
177   4222  LSTD,   STD                                                /PSI 124
            *210                                                       /PSI 125
210   7000          NOP                 /NO AUDIO OUTPUT               /PSI 126
211   7000          NOP                                                /PSI 127
212   7000          NOP                                                /PSI 128
            *545                                                       /PSI 129
545   7000          NOP                 /DO NOT INITIALIZE RATEMETER   /PSI 130
            *600                                                       /PSI 131
            /TN. RATEMETER TYPEWRITER ON                               /PSI 132
600   7001  TYON,   IAC                                                /PSI 133
            /TF. RATEMETER TYPEWRITER OFF                              /PSI 134
601   3360  TYOFF,  DCA TYPE                                           /PSI 135
602   5465          JMP I LTSIN                                        /PSI 136
                                                                       /PSI 137
            /CN. CHART RECORDER ON                                     /PSI 138
603   7001  CHRTON, IAC                                                /PSI 139
            /CF. CHART RECORDER OFF                                    /PSI 140
604   3361  CHRTOF, DCA CHART                                          /PSI 141
605   5465          JMP I LTSIN                                        /PSI 142
                                                                       /PSI 143
606      0  DTCST,  0                                                 /PSI 144
607      0          0                                                  /PSI 145
610      0          0                                                  /PSI 146
611   7777  FOURTH, 7777                                               /PSI 147
612   2000          2000                                               /PSI 148
613      0          0000                                               /PSI 149
614      0  TMPY,   0                                                  /PSI 150
615      0          0                                                  /PSI 151
616      0          0                                                  /PSI 152
617   2400  LREC,   REC                                                /PSI 153
                                                                       /PSI 154
            /MS. MEASURE STANDARD AFTER CURRENT REFLECTION             /PSI 155
620   7040  INSSTD, CMA                                                /PSI 156
621   3623          DCA I LKSTD         /SET KSTD #-1.                 /PSI 157
622   5465          JMP I LTSIN                                        /PSI 158
623   4215  LKSTD,  KSTD                                               /PSI 159
                                                                       /PSI 160
            TTH#624                                                    /PSI 161
            OMG#TTH+3                                                  /PSI 162
```

```
          CHI#OMG+3                                                          /PSI 163
          PHI#CHI+3                                                          /PSI 164
          *640                                                               /PSI 165
640     0 DTTH,   0                                                          /PSI 166
641     0         0                                                          /PSI 167
642     0         0                                                          /PSI 168
          /DATA COLLECTION SUBROUTINE                                        /PSI 169
643     0 DCOLL,  0                                                          /PSI 170
644  1356         TAD NSTP                                                   /PSI 171
645  7040         CMA                  /SET COUNTER OF STEPS FOR SCAN # -NSTP-1.  /PSI 172
646  3357         DCA KDC                                                    /PSI 173
647  4407         JMS I LFPT           /CLEAR FLOATING POINT ACCUMULATED COUNT TO /PSI 174
650  5576         FGET I ADZERO                                              /PSI 175
651  6173         FPUT ACCCNT                                                /PSI 176
652     0         FEXT                                                       /PSI 177
653  7040         CMA                  /WORD COUNTER # -1.                   /PSI 178
654  3362         DCA WDK                                                    /PSI 179
655  1360         TAD TYPE                                                   /PSI 180
656  7650         SNA CLA                                                    /PSI 181
657  5265         JMP RATE                                                   /PSI 182
660  1643         TAD I DCOLL                                                /PSI 183
661  3264         DCA IDENT                                                  /PSI 184
662  4565         JMS I LCRLF                                                /PSI 185
663  4544         JMS I LPRNT                                                /PSI 186
664     0 IDENT,  0                                                          /PSI 187
665  2243 RATE,   ISZ DCOLL                                                  /PSI 188
666  4765 RATE1,  JMS I LSTCT          /START COUNT.                         /PSI 189
667     0 RTMC,   0                                                          /PSI 190
670  4545         JMS I LWHERE         /SET FLOATING POINT ANGLES TO PRESENT POSIT/PSI 191
671  4766         JMS I LWTCT          /WAIT FOR COUNT TO BE COMPLETED.      /PSI 192
672   170         COUNT                /    RETURN WITH FLOATING POINT COUNT. /PSI 193
673  7000         NOP                  /    ERROR RETURN.                    /PSI 194
674  1360 RATE2,  TAD TYPE             /    NORMAL RETURN. TEST TYPE INDICATOR. /PSI 195
675  7650         SNA CLA                                                    /PSI 196
676  5317         JMP RATE4            /DO NOT TYPE.                         /PSI 197
677  2362         ISZ WDK              /TEST WORD COUNTER                    /PSI 198
700  5312         JMP RATE3                                                  /PSI 199
701  1363         TAD WDKK             /RESET WORD COUNTER                   /PSI 200
702  3362         DCA WDK                                                    /PSI 201
703  4565         JMS I LCRLF          /PUT OUT CR-LF.                       /PSI 202
704  1311         TAD SCAN             /IS IT STEP SCANNING.                 /PSI 203
705  7650         SNA CLA                                                    /PSI 204
706  5312         JMP RATE3            /NO.                                  /PSI 205
707  4427         JMS I LFOP           /YES. PRINT ANGLE LAST SET TO SCAN.   /PSI 206
710  7777         -1                                                         /PSI 207
711     0 SCAN,   0                                                          /PSI 208
712  1767 RATE3,  TAD I LCTER          /TEST FOR COUNT ERROR.                /PSI 209
713  7640         SZA CLA                                                    /PSI 210
714  5353         JMP RATE6            /ERROR.                               /PSI 211
715  4770         JMS I LDPIOT         /NO ERROR. PRINT COUNT.               /PSI 212
716  2671         CTHI                                                       /PSI 213
717  4407 RATE4,  JMS I LFPT           /ADD STEPS TO ANGLES.                 /PSI 214
720  5224         FGET TTH                                                   /PSI 215
721  1240         FADD DTTH                                                  /PSI 216
722  6224         FPUT TTH                                                   /PSI 217
723     0         FEXT                                                       /PSI 218
724  4562         JMS I LMOTOR         /STEP 2THETA.                         /PSI 219
725  1476         MIT                                                        /PSI 220
726  1361         TAD CHART            /TEST CHART INDICATOR.                /PSI 221
727  7650         SNA CLA                                                    /PSI 222
730  5334         JMP RATE5            /DO NOT CHART.                        /PSI 223
731  1767         TAD I LCTER          /TEST ERROR INDICATOR.                /PSI 224
732  7650         SNA CLA              /IF ERROR, DO NOT CHART.              /PSI 225
733  4617         JMS I LREC           /CHART COUNT.                         /PSI 226
734  4567 RATE5,  JMS I LWMOT          /WAIT FOR MOTOR TO STOP.              /PSI 227
735  4407         JMS I LFPT           /DATA COLLECTION. ADD COUNT TO ACCUMULATED /PSI 228
736  5206         FGET DTCST                                                 /PSI 229
737  3170         FMPY COUNT                                                 /PSI 230
740     6         FNEG                                                       /PSI 231
741  1211         FADD FOURTH                                                /PSI 232
742  6214         FPUT TMPY                                                  /PSI 233
743  5170         FGET COUNT                                                 /PSI 234
744  4214         FDIV TMPY                                                  /PSI 235
745  1173         FADD ACCCNT                                                /PSI 236
746  6173         FPUT ACCCNT                                                /PSI 237
747     0         FEXT                                                       /PSI 238
750  2357         ISZ KDC              /TEST COUNTER OF NUMBER OF STEPS.     /PSI 239
751  5266         JMP RATE1            /RETURN FOR NEXT COUNT.               /PSI 240
752  5643         JMP I DCOLL          /STEPS AND COUNTS COMPLETED. RETURN FROM SU/PSI 241
753  1364 RATE6,  TAD ASTK                                                   /PSI 242
754  4470         JMS I LOPCH                                                /PSI 243
```

```
 755  5317          JMP RATE4                                                  /PSI 244
 756     0  NSTP,   0                                                          /PSI 245
 757     0  KDC,    0                                                          /PSI 246
 760     0  TYPE,   0                                                          /PSI 247
 761     0  CHART,  0                                                          /PSI 248
 762     0  WDK,    0                                                          /PSI 249
 763  7766  WDKK,   -12                                                        /PSI 250
 764   252  ASTK,   252                                                        /PSI 251
 765  2703  LSTCT,  STCT                                                       /PSI 252
 766  2721  LWTCT,  WTCT                                                       /PSI 253
 767  2670  LCTER,  CTERR                                                      /PSI 254
 770  7505  LDPIOT, DPIOUT                                                     /PSI 255
                                                                               /PSI 256
            /WAIT .5 SECONDS AFTER SIGNAL TO OPEN SHUTTER                      /PSI 257
 771     0  DELAY,  0                                                          /PSI 258
 772  4765          JMS I LSTCT                                                /PSI 259
 773  7773          -5                                                         /PSI 260
 774  4766          JMS I LWTCT                                                /PSI 261
 775   170          COUNT                                                      /PSI 262
 776  7000          NOP                                                        /PSI 263
 777  5771          JMP I DELAY                                                /PSI 264
                                                                               /PSI 265
            *1344                                                              /PSI 266
            /ST. SET UP 2THETA SCAN                                            /PSI 267
1344  1361  TSCAN,  TAD ATTH                                                   /PSI 268
1345  3760          DCA I LSCAN                                                /PSI 269
1346  4426          JMS I LFNP                                                 /PSI 270
1347  7777          -1                                                         /PSI 271
1350   640  ADTTH,  DTTH                                                       /PSI 272
1351  5466          JMP I LOMGA                                                /PSI 273
                                                                               /PSI 274
            /CS. SET FOR NO SCAN                                               /PSI 275
1352  4407  NOSCAN, JMS I LFPT                                                 /PSI 276
1353  5576          FGET I ADZERO                                              /PSI 277
1354  6750          FPUT I ADTTH                                               /PSI 278
1355     0          FEXT                                                       /PSI 279
1356  3760          DCA I LSCAN                                                /PSI 280
1357  5466          JMP I LOMGA                                                /PSI 281
1360   711  LSCAN,  SCAN                                                       /PSI 282
1361   624  ATTH,   TTH                                                        /PSI 283
                                                                               /PSI 284
            *2115                                                              /PSI 285
2115  7771  NINT,   -7                                                         /PSI 286
2116  7745  NLIST,  -33                                                        /PSI 287
            *2145                                                              /PSI 288
2145  2416          2416                /TN. RATEMETER TYPEWRITER ON.          /PSI 289
2146   600          TYON                                                       /PSI 290
2147  2406          2406                /TF. RATEMETER TYPEWRITER OFF.         /PSI 291
2150   601          TYOFF                                                      /PSI 292
2151   316          0316                /CN. RATEMETER CHART RECORDER ON.      /PSI 293
2152   603          CHRTON                                                     /PSI 294
2153   306          0306                /CF. RATEMETER CHART RECORDER OFF.     /PSI 295
2154   604          CHRTOF                                                     /PSI 296
2155  1523          1523                /MS. MEASURE STANDARDS AFTER CURRENT REFLEC/PSI 297
2156   620          INSSTD                                                     /PSI 298
2157     0          0000                                                       /PSI 299
2160   210          OMGA                                                       /PSI 300
            *2207                                                              /PSI 301
2207   424          0424                /DT.                                   /PSI 302
2210  4467          SETTHT                                                     /PSI 303
2211   417          0417                /DO.                                   /PSI 304
2212  2300          SETOMG                                                     /PSI 305
2213  2324          2324                /ST. READ STEP SIZE FOR 2THETA SCAN.   /PSI 306
2214  1344          TSCAN                                                      /PSI 307
2215   323          0323                /CS. CLEAR ALL STEPS TO ZERO.          /PSI 308
2216  1352          NOSCAN                                                     /PSI 309
2217  2023          2023                /PS. PRINT SCALE OF CHART RECORDER.    /PSI 310
2220  7556          PRSCAL                                                     /PSI 311
2221  2304          2304                /SD. SET UP DATA COLLECTION.           /PSI 312
2222  3200          INDTCL                                                     /PSI 313
2223  3223          3223                /ZS. INPUT STANDARD REFLECTION         /PSI 314
2224  4200          SSTD                                                       /PSI 315
2225  2726          2726                /WV. READ WAVELENGTH.                  /PSI 316
2226  5774          WAVE                                                       /PSI 317
2227  1020          1020                /HP. COLLECT DATA FOR GIVEN INDICES AND PSI/PSI 318
2230  3375          HP                                                         /PSI 319
                                                                               /PSI 320
2231    10  LCHO,   0010                /LCHO#-135                             /PSI 321
2232  5710          5710                                                       /PSI 322
2233     0          0000                                                       /PSI 323
2234     6  LCHI,   0006                /LCHI#-44                              /PSI 324
```

```
2235  5200          5200                                                    /PSI 325
2236     0          0000                                                    /PSI 326
2237     6  LCH2,   0006                 /LCH2#+45                          /PSI 327
2240  2640          2640                                                    /PSI 328
2241     0          0000                                                    /PSI 329
2242    10  LCH3,   0010                 /LCH3#+136                         /PSI 330
2243  2100          2100                                                    /PSI 331
2244     0          0000                                                    /PSI 332
                                                                            /PSI 333
             *2300                                                          /PSI 334
             /DO. DRIVE OMEGA TO ANGLE READ IN                              /PSI 335
2300  4426  SETOMG, JMS I LFNP                                              /PSI 336
2301  7777          -1                                                      /PSI 337
2302   627          OMG                                                     /PSI 338
2303  4562          JMS I LMOTOR                                            /PSI 339
2304  1575          MIO                                                     /PSI 340
2305  5466          JMP I LOMGA                                             /PSI 341
                                                                            /PSI 342
             *2563                                                          /PSI 343
             /SUBROUTINE TO PUT OUT LEADER                                  /PSI 344
2563     0  LEAD,   0                                                      /PSI 345
2564  1373          TAD CLEAD                                               /PSI 346
2565  3374          DCA KLEAD                                               /PSI 347
2566  1375  LEAD1,  TAD LEADER                                              /PSI 348
2567  4470          JMS I LOPCH                                             /PSI 349
2570  2374          ISZ KLEAD                                               /PSI 350
2571  5366          JMP LEAD1                                               /PSI 351
2572  5763          JMP I LEAD                                              /PSI 352
2573  7754  CLEAD,  -24                                                     /PSI 353
2574     0  KLEAD,  0                                                      /PSI 354
2575   200  LEADER, 0200                                                    /PSI 355
                                                                            /PSI 356
             *2632                                                          /PSI 357
2632  7000          NOP                    /NO AUDIO                        /PSI 358
             *2662                                                          /PSI 359
2662  5465          JMP I LTSIN                                             /PSI 360
             *3004                                                          /PSI 361
3004     0  RANGE,  0                                                      /PSI 362
3005  4764          JMS I LOTREG           /COMPUTE REGION FOR OMEGA AND FINAL 2THETA /PSI 363
3006   103          FTTH                                                    /PSI 364
3007  4167          COMG                                                    /PSI 365
3010     0  JOMTH1, 0                                                      /PSI 366
3011  5765          JMP I LBIG             /NEED TO ADJUST ANGLES           /PSI 367
3012  4764          JMS I LOTREG           /COMPUTE REGION FOR OMEGA AND INITIAL 2THET/PSI 368
3013   100          STTH                   /SCAN                            /PSI 369
3014  4167          COMG                                                    /PSI 370
3015     0  JOMTH2, 0                                                      /PSI 371
3016  5357          JMP REJECT             /REJECT                          /PSI 372
3017  4766          JMS I LCREG            /COMPUTE REGION OF CALCULATED CHI /PSI 373
3020  4172          CCHI                                                    /PSI 374
3021     0  JCH,    0                                                      /PSI 375
3022  4767          JMS I LACC             /TEST TO SEE IF FINAL POSITION OF SCAN ACCE/PSI 376
3023  3021          JCH                                                     /PSI 377
3024  3010          JOMTH1                                                  /PSI 378
3025  5357          JMP REJECT             /REJECT                          /PSI 379
3026  4767          JMS I LACC             /TEST TO SEE IF INITIAL POSITION OF SCAN AC/PSI 380
3027  3021          JCH                                                     /PSI 381
3030  3015          JOMTH2                                                  /PSI 382
3031  5357          JMP REJECT             /REJECT                          /PSI 383
3032  4545          JMS I LWHERE           /COMPUTE REGIONS OF CURRENT POSITION /PSI 384
3033  4764          JMS I LOTREG                                            /PSI 385
3034   624          TTH                                                     /PSI 386
3035   627          OMG                                                     /PSI 387
3036     0  IOMTH,  0                                                      /PSI 388
3037  7402          HLT                    /REJECT SHOULD NOT OCCUR         /PSI 389
3040  4766          JMS I LCREG                                             /PSI 390
3041   632          CHI                                                     /PSI 391
3042     0  ICH,    0                                                      /PSI 392
3043  4424  RNG1,   JMS I LCOP             /SET CHI AND PHI TO DRIVE TO CALCULATED POS/PSI 393
3044  7772          -6                                                      /PSI 394
3045  4172          CCHI                                                    /PSI 395
3046   632  LCHI,   CHI                                                     /PSI 396
3047  1236          TAD IOMTH              /COMPARE OMEGA-2THETA REGIONS OF CURRENT AN/PSI 397
3050  1215          TAD JOMTH2             /CALCULATED POSITIONS            /PSI 398
3051  7650          SNA CLA                                                 /PSI 399
3052  5271          JMP RNG2               /BOTH ZERO                       /PSI 400
3053  1221          TAD JCH                /COMPARE CHI REGIONS OF CURRENT AND CALCULA/PSI 401
3054  7041          CIA                    /POSITIONS                       /PSI 402
3055  1242          TAD ICH                                                 /PSI 403
3056  7650          SNA CLA                                                 /PSI 404
3057  5271          JMP RNG2               /BOTH SAME                       /PSI 405
```

```
3060  4562          JMS I LMOTOR      /DIFFERENT CHI REGIONS, GENERATE INDICATOR /PSI 406
3061  1676  LMIC,   MIC               /DIRECTION OF CHI MOVEMENT                /PSI 407
3062  3661          DCA I LMIC                                                  /PSI 408
3063  1770          TAD I LOVRC                                                 /PSI 409
3064  7450          SNA                                                         /PSI 410
3065  7001          IAC                                                         /PSI 411
3066  3137          DCA DCH                                                     /PSI 412
3067  4771          JMS I LINTFR      /TEST FOR POSSIBLE INTERFERENCE           /PSI 413
3070  5306          JMP RNG3          /POSSIBLE INTERFERENCE RETURN             /PSI 414
3071  4424  RNG2,   JMS I LCOP        /NO INTERFERENCE, SET TO DRIVE 2THETA TO ST/PSI 415
3072  7775          -3                /SCAN                                     /PSI 416
3073   100          STTH                                                        /PSI 417
3074   111          TTHD                                                        /PSI 418
3075  4424          JMS I LCOP        /SET TO DRIVE TO CALCULATED OMEGA         /PSI 419
3076  7775          -3                                                          /PSI 420
3077  4167          COMG                                                        /PSI 421
3100   114          OMGD                                                        /PSI 422
3101  4772          JMS I LDRV        /DRIVE ALL MOTORS                         /PSI 423
3102  4773          JMS I LPIA        /PRINT INDICES AND ANGLES                 /PSI 424
3103  2204          ISZ RANGE         /SET ACCEPT RETURN                        /PSI 425
3104  4567          JMS I LWMOT       /WAIT FOR MOTORS TO STOP                  /PSI 426
3105  5604          JMP I RANGE       /RETURN                                   /PSI 427
3106  1242  RNG3,   TAD ICH           /POSSIBLE INTERFERENCE, ICH#ICH+DCH, MOD 4 /PSI 428
3107  1137          TAD DCH                                                     /PSI 429
3110  7510          SPA                                                         /PSI 430
3111  1161          TAD FOUR                                                    /PSI 431
3112   154          AND THR                                                     /PSI 432
3113  3242          DCA ICH                                                     /PSI 433
3114  1236          TAD IOMTH         /IS CURRENT POSITION IN SAFE REGION       /PSI 434
3115  7640          SZA CLA                                                     /PSI 435
3116  5774          JMP I LSAFE       /NO, SET TO DRIVE 2THETA AND OMEGA TO SAFE /PSI 436
3117  4424          JMS I LCOP        /YES, SET TO LEAVE 2THETA AND OMEGA UNCHANG/PSI 437
3120  7772          -6                                                          /PSI 438
3121   624          TTH                                                         /PSI 439
3122   111          TTHD                                                        /PSI 440
3123  1137  RNG4,   TAD DCH           /SET COUNTER USED TO DRIVE CHI TO CORRECT L/PSI 441
3124  7700          SMA CLA           /IF DCH -, I#ICH                          /PSI 442
3125  7040          CMA               /IF DCH +, I#ICH-1, MOD 4                 /PSI 443
3126  1242          TAD ICH                                                     /PSI 444
3127  7510          SPA                                                         /PSI 445
3130  1161          TAD FOUR                                                    /PSI 446
3131   154          AND THR                                                     /PSI 447
3132  7040          CMA                                                         /PSI 448
3133  3130          DCA INDX                                                    /PSI 449
3134  1375          TAD ALCHO                                                   /PSI 450
3135  3135          DCA LCH                                                     /PSI 451
3136  4407  RNG5,   JMS I LFPT                                                  /PSI 452
3137  5535          FGET I LCH                                                  /PSI 453
3140  6646          FPUT I LCHI                                                 /PSI 454
3141     0          FEXT                                                        /PSI 455
3142  1135          TAD LCH                                                     /PSI 456
3143  1154          TAD THR                                                     /PSI 457
3144  3135          DCA LCH                                                     /PSI 458
3145  2130          ISZ INDX                                                    /PSI 459
3146  5336          JMP RNG5                                                    /PSI 460
3147  4772  RNG6,   JMS I LDRV        /USE ROUTINE TO DRIVE 2THETA,OMEGA SAFELY, /PSI 461
3150  1776          TAD I LMIT        /WAIT FOR ALL BUT PHI TO STOP             /PSI 462
3151  1777          TAD I LMIO                                                  /PSI 463
3152  1661          TAD I LMIC                                                  /PSI 464
3153  7640          SZA CLA                                                     /PSI 465
3154  5350          JMP RNG6+1                                                  /PSI 466
3155  3236          DCA IOMTH         /IOMTH#0, NOW IN SAFE REGION              /PSI 467
3156  5243          JMP RNG1          /JUMP TO TEST AGAIN                       /PSI 468
3157  4544  REJECT, JMS I LPRNT       /CALCULATED POSITION OUT OF RANGE, PRINT SH/PSI 469
3160  4316          4316                                                        /PSI 470
3161  4773          JMS I LPIA        /PRINT INDICES AND ANGLES                 /PSI 471
3162  4565          JMS I LCRLF                                                 /PSI 472
3163  5604          JMP I RANGE       /REJECT RETURN                            /PSI 473
3164  3431  LOTREG, OTREG                                                       /PSI 474
3165  4346  LBIG,   BIG                                                         /PSI 475
3166  3307  LCREG,  CREG                                                        /PSI 476
3167  4317  LACC,   ACCESS                                                      /PSI 477
3170  1667  LOVRC,  OVRC                                                        /PSI 478
3171  3341  LINTFR, INTFR                                                       /PSI 479
3172  4401  LDRV,   DRIVE                                                       /PSI 480
3173  4270  LPIA,   PIA                                                         /PSI 481
3174  7636  LSAFE,  SAFE                                                        /PSI 482
3175  2231  ALCHO,  LCHO                                                        /PSI 483
3176  1476  LMIT,   MIT                                                         /PSI 484
3177  1575  LMIO,   MIO                                                         /PSI 485
                                                                                /PSI 486
```

```
            *3200                                                          /PSI 487
            /SET UP DATA COLLECTION.                                       /PSI 488
3200  4426  INDTCL, JMS I LFNP        /READ TIME, SCALE, BACKGROUND FACTOR. /PSI 489
3201  7775          -3                                                     /PSI 490
3202  3242          TIME                                                   /PSI 491
3203  4407          JMS I LFPT        /COMPUTE NEGATIVE OF TENTHS OF SECONDS TO C/PSI 492
3204  5242          FGET TIME                                              /PSI 493
3205  3654          FMPY I LTEN                                            /PSI 494
3206  6242          FPUT TIME                                              /PSI 495
3207  1255          FADD ONEHF                                             /PSI 496
3210     0          FEXT                                                   /PSI 497
3211  4434          JMS I LFIX                                             /PSI 498
3212  7041          CIA                                                    /PSI 499
3213  3253          DCA RTMSV                                              /PSI 500
3214  4407          JMS I LFPT        /COMPUTE SCALE FACTOR, 500/(PULSES FOR FULL/PSI 501
3215  5660          FGET I LF500                                           /PSI 502
3216  4245          FDIV SCALE                                             /PSI 503
3217  6261          FPUT FACSV                                             /PSI 504
3220  4250          FDIV BKGFAC       /COMPUTE SCALE FACTOR FOR BACKGROUND COUNTS/PSI 505
3221  6264          FPUT FACSV2                                            /PSI 506
3222  5267          FGET DEDTM        /COMPUTE DEAD TIME CONSTANT FOR STEPPING /PSI 507
3223  4242          FDIV TIME                                              /PSI 508
3224  6275          FPUT STPDTC                                            /PSI 509
3225  4250          FDIV BKGFAC       /COMPUTE DEAD TIME CONSTANT FOR BACKGROUND /PSI 510
3226  6272          FPUT BKGDTC                                            /PSI 511
3227  5242          FGET TIME         /COMPUTE TIME FOR BACKGROUND COUNTS.  /PSI 512
3230     6          FNEG                                                   /PSI 513
3231  3250          FMPY BKGFAC                                            /PSI 514
3232  1255          FADD ONEHF                                             /PSI 515
3233     0          FEXT                                                   /PSI 516
3234  4434          JMS I LFIX                                             /PSI 517
3235  3300          DCA RTMC2                                              /PSI 518
3236  4426          JMS I LFNP        /READ BASE WIDTH, DLOL.               /PSI 519
3237  7776          -2                                                     /PSI 520
3240  3301          BW                                                     /PSI 521
3241  5466          JMP I LOMGA                                            /PSI 522
                                                                           /PSI 523
3242     0  TIME,   0                                                      /PSI 524
3243     0          0                                                      /PSI 525
3244     0          0                                                      /PSI 526
3245     0  SCALE,  0                                                      /PSI 527
3246     0          0                                                      /PSI 528
3247     0          0                                                      /PSI 529
3250     0  BKGFAC, 0                                                      /PSI 530
3251     0          0                                                      /PSI 531
3252     0          0                                                      /PSI 532
3253     0  RTMSV,  0                                                      /PSI 533
3254  7450  LTEN,   TEN                                                    /PSI 534
3255     0  ONEHF,  0000                                                   /PSI 535
3256  2000          2000                                                   /PSI 536
3257     0          0000                                                   /PSI 537
3260  2433  LF500,  FP500                                                  /PSI 538
3261     0  FACSV,  0                                                      /PSI 539
3262     0          0                                                      /PSI 540
3263     0          0                                                      /PSI 541
3264     0  FACSV2, 0                                                      /PSI 542
3265     0          0                                                      /PSI 543
3266     0          0                                                      /PSI 544
3267  7762  DEDTM,  7762              /.0000378 TENTH SECONDS              /PSI 545
3270  2364          2364                                                   /PSI 546
3271  2665          2665                                                   /PSI 547
3272     0  BKGDTC, 0                                                      /PSI 548
3273     0          0                                                      /PSI 549
3274     0          0                                                      /PSI 550
3275     0  STPDTC, 0                                                      /PSI 551
3276     0          0                                                      /PSI 552
3277     0          0                                                      /PSI 553
3300     0  RTMC2,  0                                                      /PSI 554
3301     0  BW,     0                                                      /PSI 555
3302     0          0                                                      /PSI 556
3303     0          0                                                      /PSI 557
3304     0  DLOL,   0                                                      /PSI 558
3305     0          0                                                      /PSI 559
3306     0          0                                                      /PSI 560
                                                                           /PSI 561
            /SUBROUTINE TO DEFINE REGION OF CHI                            /PSI 562
3307     0  CREG,   0                                                      /PSI 563
3310  1707          TAD I CREG        /GET ADDRESS OF CHI                  /PSI 564
3311  3133          DCA TCHI                                               /PSI 565
3312  2307          ISZ CREG          /ADVANCE TO ADDRESS OF INDICATOR     /PSI 566
3313  3707          DCA I CREG        /SET INDICATOR TO ZERO               /PSI 567
```

```
3314  1143          TAD MIN4          /SET COUNTER                                  /PSI 568
3315  3134          DCA KCREG                                                       /PSI 569
3316  1340          TAD LLCHO         /SET ADDRESS OF FIRST CHI LIMIT               /PSI 570
3317  3135          DCA LCH                                                         /PSI 571
3320  4407  CREG1,  JMS I LFPT        /COMPUTE CHI-LCH(I)                           /PSI 572
3321  5533          FGET I TCHI                                                     /PSI 573
3322  2535          FSUB I LCH                                                      /PSI 574
3323     0          FEXT                                                            /PSI 575
3324  1045          TAD HORD                                                        /PSI 576
3325  7710          SPA CLA                                                         /PSI 577
3326  5336          JMP CREG2         /RETURN IF NEGATIVE                           /PSI 578
3327  1135          TAD LCH           /IF.+, ADVANCE TO NEXT CHI LIMIT              /PSI 579
3330  1154          TAD THR                                                         /PSI 580
3331  3135          DCA LCH                                                         /PSI 581
3332  2707          ISZ I CREG        /ADVANCE INDICATOR                            /PSI 582
3333  2134          ISZ KCREG         /TEST COUNTER                                 /PSI 583
3334  5320          JMP CREG1                                                       /PSI 584
3335  3707          DCA I CREG        /IF ZERO, SET INDICATOR TO ZERO               /PSI 585
3336  2307  CREG2,  ISZ CREG                                                        /PSI 586
3337  5707          JMP I CREG        /RETURN                                       /PSI 587
3340  2231  LLCHO,  LCHO                                                           /PSI 588
                                                                                    /PSI 589
            /TEST FOR POSSIBLE INTERFERENCE                                         /PSI 590
3341     0  INTFR,  0                                                              /PSI 591
3342  1772          TAD I LICH        /KCH#ICH                                      /PSI 592
3343  3106          DCA KCH                                                         /PSI 593
3344  4774  INTFR1, JMS I ADACC       /TEST KCH AND IOMTH                           /PSI 594
3345   106          KCH                                                             /PSI 595
3346  3036          IOMTH                                                           /PSI 596
3347  5741          JMP I INTFR       /POSSIBLE INTERFERENCE, RETURN                /PSI 597
3350  4774          JMS I ADACC       /TEST KCH AND JOMTH2                          /PSI 598
3351   106          KCH                                                             /PSI 599
3352  3015          JOMTH2                                                          /PSI 600
3353  5741          JMP I INTFR       /POSSIBLE INTERFERENCE, RETURN                /PSI 601
3354  1773          TAD I LJCH        /IS KCH EQUAL TO JCH                          /PSI 602
3355  7041          CIA                                                             /PSI 603
3356  1106          TAD KCH                                                         /PSI 604
3357  7650          SNA CLA                                                         /PSI 605
3360  5370          JMP INTFR2        /YES                                          /PSI 606
3361  1106          TAD KCH           /NO, KCH#KCH+DCH, MOD 4                       /PSI 607
3362  1137          TAD DCH                                                         /PSI 608
3363  7510          SPA                                                             /PSI 609
3364  1161          TAD FOUR                                                        /PSI 610
3365   154          AND THR                                                         /PSI 611
3366  3106          DCA KCH                                                         /PSI 612
3367  5344          JMP INTFR1                                                      /PSI 613
3370  2341  INTFR2, ISZ INTFR         /NO POSSIBLE INTERFERENCE, RETURN             /PSI 614
3371  5741          JMP I INTFR                                                     /PSI 615
3372  3042  LICH,   ICH                                                             /PSI 616
3373  3021  LJCH,   JCH                                                             /PSI 617
3374  4317  ADACC,  ACCESS                                                          /PSI 618
                                                                                    /PSI 619
            *3375                                                                   /PSI 620
            /HP. COLLECT DATA GIVEN INDICES AND PSI                                 /PSI 621
3375  4425  HP,     JMS I LMV         /COMPUTE REFERENCE VECTOR IN PHI COORDINATE/PSI 622
3376  7600          MB11                                                            /PSI 623
3377  7567          REF                                                             /PSI 624
3400  3767          RPHI                                                            /PSI 625
3401  4577  HP1,    JMS I LSTD        /MEASURE STANDARD REFLECTION                  /PSI 626
3402  7240          CLA CMA           /SET IND#-1                                   /PSI 627
3403  3234          DCA IND                                                         /PSI 628
3404  4467  HP2,    JMS I LIPCH       /READ CHARACTER FROM INPUT TAPE               /PSI 629
3405  3235          DCA TEM                                                         /PSI 630
3406  1235          TAD TEM                                                         /PSI 631
3407  4470          JMS I LOPCH       /PRINT CHARACTER                              /PSI 632
3410  1235          TAD TEM           /IS IT A LINE FEED                            /PSI 633
3411  1230          TAD MINLF                                                       /PSI 634
3412  7640          SZA CLA                                                         /PSI 635
3413  5223          JMP HPERR         /NO                                           /PSI 636
3414  4426          JMS I LFNP        /YES, READ INDICES AND PSI                    /PSI 637
3415  7774          -4                                                              /PSI 638
3416  2547          FH                                                              /PSI 639
3417  4404          JMS I LANG        /COMPUTE ANGLES FOR THIS REFLECTION           /PSI 640
3420  4436          JMS I LDAT        /TEST COMPUTED ANGLES AND COLLECT DATA IF I/PSI 641
3421  5202          JMP HP1+1         /OUT OF RANGE, DATA NOT COLLECTED             /PSI 642
3422  5201          JMP HP1           /IN RANGE, DATA COLLECTED                     /PSI 643
3423  2234  HPERR,  ISZ IND           /IS CHARACTER FIRST ONE READ                  /PSI 644
3424  5204          JMP HP2           /NO, IGNORE IT                                /PSI 645
3425  4544          JMS I LPRNT       /YES, PRINT ERROR INDICATOR, SHARP-E          /PSI 646
3426  4305          4305                                                            /PSI 647
3427  5204          JMP HP2                                                         /PSI 648
```

```
3430  7566  MINLF,  -212                                                    /PSI 649
                                                                            /PSI 650
            /SUBROUTINE TO DETERMINE REGION OF OMEGA AND 2THETA             /PSI 651
3431     0  OTREG,  0                                                       /PSI 652
3432  4423          JMS I LADR          /GET ADDRESSES OF 2THETA ANC OMEGA  /PSI 653
3433  7776          -2                                                      /PSI 654
3434     0  LT,IND,  0                  /TEMPORARIES USED ALSO BY /HP PROGRAM /PSI 655
3435     0  LO,TEM,  0                                                      /PSI 656
3436  3631          DCA I OTREG         /SET INDICATCR # 0                  /PSI 657
3437  4407          JMS I LFPT          /TEST THETA-CMEGA-A                 /PSI 658
3440  5634          FGET I LT                                               /PSI 659
3441  4151          FDIV TWO                                                /PSI 660
3442  6106          FPUT THETA                                              /PSI 661
3443  2635          FSUB I LO                                               /PSI 662
3444  2347          FSUB A                                                  /PSI 663
3445     0          FEXT                                                    /PSI 664
3446  1045          TAD HORD                                                /PSI 665
3447  7710          SPA CLA                                                 /PSI 666
3450  5344          JMP OTREJ+1         /OMEGA TCC LARGE, REJECT            /PSI 667
3451  4407          JMS I LFPT          /TEST THETA-CMEGA-AP                /PSI 668
3452  1352          FADD AMAP                                               /PSI 669
3453     0          FEXT                                                    /PSI 670
3454  1045          TAD HORD                                                /PSI 671
3455  7710          SPA CLA             /IF -, SET TWC BIT OF INDICATOR     /PSI 672
3456  1151          TAD TWO                                                 /PSI 673
3457  3631          DCA I OTREG                                             /PSI 674
3460  4407          JMS I LFPT          /TEST THETA-CMEGA-B                 /PSI 675
3461  1355          FADD APMB                                               /PSI 676
3462     0          FEXT                                                    /PSI 677
3463  1045          TAD HORD                                                /PSI 678
3464  7700          SMA CLA                                                 /PSI 679
3465  5343          JMP OTREJ           /OMEGA TOC SMALL, REJECT            /PSI 680
3466  4407          JMS I LFPT          /TEST THETA-CMEGA-BP                /PSI 681
3467  1360          FADD BMBP                                               /PSI 682
3470     0          FEXT                                                    /PSI 683
3471  1045          TAD HORD                                                /PSI 684
3472  7700          SMA CLA                                                 /PSI 685
3473  7001          IAC                 /IF +, SET CNE BIT OF INDICATOR     /PSI 686
3474  1631          TAD I OTREG                                             /PSI 687
3475  3631          DCA I OTREG                                             /PSI 688
3476  4407          JMS I LFPT          /TEST THETA+CMEGA-D                 /PSI 689
3477  5106          FGET THETA                                              /PSI 690
3500  1635          FADD I LO                                               /PSI 691
3501  2363          FSUB D                                                  /PSI 692
3502     0          FEXT                                                    /PSI 693
3503  1045          TAD HORD                                                /PSI 694
3504  7700          SMA CLA                                                 /PSI 695
3505  5344          JMP OTREJ+1         /OMEGA TOC LARGE, REJECT            /PSI 696
3506  4407          JMS I LFPT          /TEST THETA+CMEGA-DP                /PSI 697
3507  1366          FADD DMDP                                               /PSI 698
3510     0          FEXT                                                    /PSI 699
3511  1045          TAD HORD                                                /PSI 700
3512  7710          SPA CLA                                                 /PSI 701
3513  5321          JMP OTREG1                                              /PSI 702
3514  1631          TAD I OTREG         /IF +, OR BIT CNE TO INDICATOR      /PSI 703
3515  7040          CMA                                                     /PSI 704
3516   146          AND ONE                                                 /PSI 705
3517  1631          TAD I OTREG                                             /PSI 706
3520  3631          DCA I OTREG                                             /PSI 707
3521  4407  OTREG1, JMS I LFPT          /TEST THETA+CMEGA-E                 /PSI 708
3522  1371          FADD DPME                                               /PSI 709
3523     0          FEXT                                                    /PSI 710
3524  1045          TAD HORD                                                /PSI 711
3525  7710          SPA CLA                                                 /PSI 712
3526  5343          JMP OTREJ           /OMEGA TOC SMALL, REJECT            /PSI 713
3527  4407          JMS I LFPT          /TEST THETA+CMEGA-EP                /PSI 714
3530  1374          FADD EMEP                                               /PSI 715
3531     0          FEXT                                                    /PSI 716
3532  1045          TAD HORD                                                /PSI 717
3533  7700          SMA CLA                                                 /PSI 718
3534  5342          JMP OTREG2                                              /PSI 719
3535  1631          TAD I OTREG         /IF -, OR BIT TWO TO INDICATOR      /PSI 720
3536  7040          CMA                                                     /PSI 721
3537   151          AND TWO                                                 /PSI 722
3540  1631          TAD I OTREG                                             /PSI 723
3541  3631          DCA I OTREG                                             /PSI 724
3542  2231  OTREG2, ISZ OTREG           /NORMAL RETURN                      /PSI 725
3543  7240  OTREJ,  CLA CMA             /TOO SMALL RETURN, SET INDICATOR # 1 /PSI 726
3544  3137          DCA IOTREG                                              /PSI 727
3545  2231          ISZ OTREG           /TOO BIG RETURN, INDICATOR # 0      /PSI 728
3546  5631          JMP I OTREG                                             /PSI 729
```

```
3547     7  A,       0007                  /A#-66                                        /PSI 730
3550  5740           5740                                                                /PSI 731
3551     0           0000                                                                /PSI 732
3552     5  AMAP,    0005                  /A-AP#-26, AP#-40                             /PSI 733
3553  4600           4600                                                                /PSI 734
3554     0           0000                                                                /PSI 735
3555     7  APMB,    0007                  /AP-B#-106, B#66                              /PSI 736
3556  4540           4540                                                                /PSI 737
3557     0           0000                                                                /PSI 738
3560     5  BMBP,    0005                  /B-BP#26, BP#40                               /PSI 739
3561  3200           3200                                                                /PSI 740
3562     0           0000                                                                /PSI 741
3563     7  D,       0007                  /D#71                                         /PSI 742
3564  2160           2160                                                                /PSI 743
3565     0           0000                                                                /PSI 744
3566     5  DMDP,    0005                  /D-DP#31, DP#40                               /PSI 745
3567  3700           3700                                                                /PSI 746
3570     0           0000                                                                /PSI 747
3571     7  DPME,    0007                  /DP-E#103, E#-63                              /PSI 748
3572  3160           3160                                                                /PSI 749
3573     0           0000                                                                /PSI 750
3574     5  EMEP,    0005                  /E-EP#-23, EP#-40                             /PSI 751
3575  5100           5100                                                                /PSI 752
3576     0           0000                                                                /PSI 753
                                                                                        /PSI 754
            *3600                                                                       /PSI 755
3600     0  DATA,    0                                                                   /PSI 756
3601  4407           JMS I LFPT            /COMPUTE START OF 2THETA SCAN                 /PSI 757
3602  5772           FGET I LBW                                                          /PSI 758
3603  4151           FDIV TWO                                                            /PSI 759
3604     6           FNEG                                                                /PSI 760
3605  1776           FADD I ACTTH                                                        /PSI 761
3606  6100           FPUT STTH                                                           /PSI 762
3607  5133           FGET SINT             /COMPUTE NUMBER OF STEPS FOR SCAN             /PSI 763
3610  4103           FDIV COSTH                                                          /PSI 764
3611  3771           FMPY I LDLOL                                                        /PSI 765
3612  1772           FADD I LBW                                                          /PSI 766
3613  4763           FDIV I LDTTH                                                        /PSI 767
3614  2357           FSUB ONEHAF                                                         /PSI 768
3615     0           FEXT                                                                /PSI 769
3616  4434           JMS I LFIX                                                          /PSI 770
3617  3136           DCA NS                                                              /PSI 771
3620  1136           TAD NS                /COMPUTE FINAL POSITION OF 2THETA SCAN        /PSI 772
3621  4471           JMS I LFLT                                                          /PSI 773
3622  4407           JMS I LFPT                                                          /PSI 774
3623  3763           FMPY I LDTTH                                                        /PSI 775
3624  1100           FADD STTH                                                           /PSI 776
3625  6103           FPUT FTTH                                                           /PSI 777
3626     0           FEXT                                                                /PSI 778
3627  1155           TAD MTWO              /SET COUNTER OF NUMBER OF TIMES COMPUTED AN/PSI 779
3630  3130           DCA KRNG              /ARE ADJUSTED                                 /PSI 780
3631  4737           JMS I LRNG            /SEE IF COMPUTED ANGLES ARE IN RANGE          /PSI 781
3632  5600           JMP I DATA            /OUT OF RANGE, REJECT RETURN                  /PSI 782
3633  2200           ISZ DATA              /IN RANGE, ANGLES HAVE BEEN SET, COLLECT DA/PSI 783
3634  7001           IAC                   /OPEN SHUTTER                                 /PSI 784
3635  4735           JMS I LSHUTR                                                        /PSI 785
3636  4736           JMS I LDELAY          /WAIT .5 SECONDS                              /PSI 786
3637  4341           JMS BKG               /SET UP AND COUNT FIRST BKG                   /PSI 787
3640  4407           JMS I LFPT                                                          /PSI 788
3641  5173           FGET ACCCNT                                                         /PSI 789
3642  6106           FPUT BKGI             /SAVE 1ST BKG                                 /PSI 790
3643  5770           FGET I LFACSV         /SET UP FOR SCAN                              /PSI 791
3644  6766           FPUT I LFCTR                                                        /PSI 792
3645  5732           FGET I LSDTC                                                        /PSI 793
3646  6733           FPUT I LDTCST                                                       /PSI 794
3647     0           FEXT                                                                /PSI 795
3650  1136           TAD  NS                                                             /PSI 796
3651  3762           DCA I LNSTP                                                         /PSI 797
3652  1767           TAD I LRTMSV                                                        /PSI 798
3653  3765           DCA I LRTMC                                                         /PSI 799
3654  4764           JMS I LDCOLL          /MAKE SCAN                                    /PSI 800
3655  4304           4304                  /D.                                           /PSI 801
3656  4407           JMS I LFPT                                                          /PSI 802
3657  5173           FGET ACCCNT           /SAVE ACCUMULATED COUNT                       /PSI 803
3660  6111           FPUT TOTCNT                                                         /PSI 804
3661     0           FEXT                                                                /PSI 805
3662  4341           JMS BKG               /SET UP AND COUNT 2ND BKG                     /PSI 806
3663  4735           JMS I LSHUTR          /CLOSE SHUTTER                                /PSI 807
3664  4565           JMS I LCRLF           /CR, LF                                       /PSI 808
3665  4544           JMS I LPRNT                                                         /PSI 809
3666  4322           4322                                                                /PSI 810
```

```
3667  1136          TAD NS                                                  /PSI 811
3670  4464          JMS I LIOUT          /PUT OUT NUMBER OF STEPS IN SCAN   /PSI 812
3671  1136          TAD NS               /COMPUTE NET COUNT AND ITS         /PSI 813
3672  7040          CMA                                                     /PSI 814
3673  4471          JMS I LFLT           /     STANDARD ERROR               /PSI 815
3674  4407          JMS I LFPT                                              /PSI 816
3675  4773          FDIV I LBKGFC                                           /PSI 817
3676  4151          FDIV TWO                                                /PSI 818
3677  6114          FPUT TEMP                                               /PSI 819
3700  5106          FGET BKGI                                               /PSI 820
3701  1173          FADD ACCCNT                                             /PSI 821
3702  3114          FMPY TEMP                                               /PSI 822
3703  1111          FADD TOTCNT                                             /PSI 823
3704  6117          FPUT NTCNT                                              /PSI 824
3705  2111          FSUB TOTCNT                                             /PSI 825
3706  3114          FMPY TEMP                                               /PSI 826
3707  1111          FADD TOTCNT                                             /PSI 827
3710     2          FSQT                                                    /PSI 828
3711  6122          FPUT SIGCNT                                             /PSI 829
3712  5117          FGET NTCNT                                              /PSI 830
3713     0          FEXT                                                    /PSI 831
3714  4777          JMS I LVFOUT         /PUT OUT NET COUNT                 /PSI 832
3715     7          7                                                       /PSI 833
3716     0          0                                                       /PSI 834
3717  4407          JMS I LFPT           /PUT OUT STANDARD ERROR            /PSI 835
3720  5122          FGET SIGCNT                                             /PSI 836
3721     0          FEXT                                                    /PSI 837
3722  4777          JMS I LVFOUT                                            /PSI 838
3723     5          5                                                       /PSI 839
3724     0          0                                                       /PSI 840
3725  1340          TAD MIN8                                                /PSI 841
3726  4734          JMS I LCREC          /MARK END OF REFLECTION ON CHART   /PSI 842
3727  4565          JMS I LCRLF                                             /PSI 843
3730  4565          JMS I LCRLF                                             /PSI 844
3731  5600          JMP I DATA           /RETURN                            /PSI 845
3732  3275  LSDTC,  STPDTC                                                  /PSI 846
3733   606  LDTCST, DTCST                                                  /PSI 847
3734  1146  LCREC,  CREC                                                   /PSI 848
3735  2446  LSHUTR, SHUTR                                                  /PSI 849
3736   771  LDELAY, DELAY                                                  /PSI 850
3737  3004  LRNG,   RANGE                                                  /PSI 851
3740  7770  MIN8,   -10                                                    /PSI 852
                                                                           /PSI 853
            /BACKGROUND COUNT                                              /PSI 854
3741     0  BKG,    0                    /SET UP AND COUNT BKG              /PSI 855
3742  3762          DCA I LNSTP          /SET UP                            /PSI 856
3743  1775          TAD I LRTMC2                                            /PSI 857
3744  3765          DCA I LRTMC                                             /PSI 858
3745  4407          JMS I LFPT                                              /PSI 859
3746  5774          FGET I LFCSV2                                           /PSI 860
3747  6766          FPUT I LFCTR                                            /PSI 861
3750  5756          FGET I LBKDC                                            /PSI 862
3751  6733          FPUT I LDTCST                                           /PSI 863
3752     0          FEXT                                                    /PSI 864
3753  4764          JMS I LDCOLL         /MAKE COUNT                        /PSI 865
3754  4302          4302                 /B.                                /PSI 866
3755  5741          JMP I BKG            /RETURN                            /PSI 867
3756  3272  LBKDC,  BKGDTC                                                 /PSI 868
                                                                           /PSI 869
3757     1  ONEHAF, 0001                                                   /PSI 870
3760  3000          3000                                                    /PSI 871
3761     0          0000                                                    /PSI 872
3762   756  LNSTP,  NSTP                                                   /PSI 873
3763   640  LDTTH,  DTTH                                                   /PSI 874
3764   643  LDCOLL, DCOLL                                                  /PSI 875
3765   667  LRTMC,  RTMC                                                   /PSI 876
3766  2426  LFCTR,  FACTOR                                                 /PSI 877
3767  3253  LRTMSV, RTMSV                                                  /PSI 878
3770  3261  LFACSV, FACSV                                                  /PSI 879
3771  3304  LDLOL,  DLOL                                                   /PSI 880
3772  3301  LBW,    BW                                                     /PSI 881
3773  3250  LBKGFC, BKGFAC                                                 /PSI 882
3774  3264  LFCSV2, FACSV2                                                 /PSI 883
3775  3300  LRTMC2, RTMC2                                                  /PSI 884
3776  4164  ACTTH,  CTTH                                                   /PSI 885
3777  7200  LVFOUT, VFOUT                                                  /PSI 886
                                                                           /PSI 887
            *4000                                                          /PSI 888
            /COMPUTE ANGLES FOR GIVEN SET OF INDICES AND PSI               /PSI 889
4000     0  AZANG,  0                                                      /PSI 890
4001  4425          JMS I LMV            /COMPUTE VECTOR IN PHI COORDINATE SYSTEM  /PSI 891
```

```
4002  7600   MB11                                                          /PSI 892
4003  2547   FH                                                            /PSI 893
4004   100   HPHI                                                          /PSI 894
4005  4430   JMS I LUNT        /CALCULATE UNIT VECTOR FROM HPHI            /PSI 895
4006   100   HPHI                                                          /PSI 896
4007  2245   X1                                                            /PSI 897
4010  4424   JMS I LCOP        /SAVE LENGTH OF HPHI COMPUTED BY SUBROUTINE/PSI 898
4011  7775   -3                                                            /PSI 899
4012  4705   LV                                                            /PSI 900
4013   133   LENGTH                                                        /PSI 901
4014  4431   JMS I LPRP        /COMPUTE VECTOR PERPENDICULAR TO UNIT VECTO/PSI 902
4015  2245   X1                /REFERENCE VECTOR                           /PSI 903
4016  3767   RPHI                                                          /PSI 904
4017  2267   X3                                                            /PSI 905
4020  4431   JMS I LPRP        /COMPUTE THIRD PERPENDICULAR                /PSI 906
4021  2267   X3                                                            /PSI 907
4022  2245   X1                                                            /PSI 908
4023  2256   X2                                                            /PSI 909
4024  4432   JMS I LTRN        /DESIRED RO MATRIX IS TRANSPOSE OF MATRIX F/PSI 910
4025  2245   X1                /THE THREE PERPENDICULAR VECTORS            /PSI 911
4026  2751   RO                                                            /PSI 912
4027  4407   JMS I LFPT        /COMPUTE PSI MATRIX                         /PSI 913
4030  5762   FGET I LPSI                                                   /PSI 914
4031     4   FCOS                                                          /PSI 915
4032  6114   FPUT PSIM22                                                   /PSI 916
4033  6130   FPUT PSIM33                                                   /PSI 917
4034  5762   FGET I LPSI                                                   /PSI 918
4035     3   FSIN                                                          /PSI 919
4036  6125   FPUT PSIM23                                                   /PSI 920
4037     6   FNEG                                                          /PSI 921
4040  6117   FPUT PSIM32                                                   /PSI 922
4041  5146   FGET ONE                                                      /PSI 923
4042  6100   FPUT PSIM11                                                   /PSI 924
4043  2146   FSUB ONE                                                      /PSI 925
4044  6106   FPUT PSIM31                                                   /PSI 926
4045  6103   FPUT PSIM21                                                   /PSI 927
4046  6111   FPUT PSIM12                                                   /PSI 928
4047  6122   FPUT PSIM13                                                   /PSI 929
4050     0   FEXT                                                          /PSI 930
4051  4433   JMS I LMM         /MULTIPLY RO MATRIX BY PSI MATRIX TO GET R /PSI 931
4052   100   PSIM11                                                        /PSI 932
4053  2751   RO                                                            /PSI 933
4054  2245   R                                                             /PSI 934
4055  4424   JMS I LCOP        /COPY R MATRIX TO PAGE ZERO                 /PSI 935
4056  7745   -33                                                           /PSI 936
4057  2245   R                                                             /PSI 937
4060   100   R11                                                           /PSI 938
4061  4407   JMS I LFPT        /COMPUTE ANGLES                             /PSI 939
4062  5133   FGET LENGTH       /SINT#LENGTH*WVL/2                          /PSI 940
4063  3763   FMPY I LWVL                                                   /PSI 941
4064  4151   FDIV TWO                                                      /PSI 942
4065  6133   FPUT SINT                                                     /PSI 943
4066  3133   FMPY SINT         /COSTH#SQRTF(1-SINT**2)                     /PSI 944
4067     6   FNEG                                                          /PSI 945
4070  1146   FADD ONE                                                      /PSI 946
4071     2   FSQT                                                          /PSI 947
4072  6755   FPUT I ADRB                                                   /PSI 948
4073  6103   FPUT COSTH                                                    /PSI 949
4074  5133   FGET SINT                                                     /PSI 950
4075     5   FATN                                                          /PSI 951
4076  3151   FMPY TWO                                                      /PSI 952
4077  6364   FPUT CTTH         /CTTH#2*ARTAN(SINT/COSTH)                   /PSI 953
4100  5130   FGET R33                                                      /PSI 954
4101  6755   FPUT I ADRB                                                   /PSI 955
4102  5106   FGET R31                                                      /PSI 956
4103  3106   FMPY R31                                                      /PSI 957
4104  6130   FPUT SINC                                                     /PSI 958
4105  5117   FGET R32                                                      /PSI 959
4106  3117   FMPY R32                                                      /PSI 960
4107  1130   FADD SINC                                                     /PSI 961
4110     2   FSQT                                                          /PSI 962
4111  6130   FPUT SINC                                                     /PSI 963
4112     5   FATN                                                          /PSI 964
4113  6372   FPUT CCHI         /CCHI#ARTAN(SQRT(R31**2+R32**2)/R33)        /PSI 965
4114  5130   FGET SINC         /TEST SIN(CCHI)                             /PSI 966
4115  2356   FSUB KSPEC                                                    /PSI 967
4116     0   FEXT                                                          /PSI 968
4117  1045   TAD HORD                                                      /PSI 969
4120  7710   SPA CLA                                                       /PSI 970
4121  5342   JMP SPEC          /SPECIAL CASE                               /PSI 971
4122  4407   JMS I LFPT                                                    /PSI 972
```

```
4123  5106          FGET R31                                          /PSI 973
4124     6          FNEG                                              /PSI 974
4125  6755          FPUT I ADRB                                       /PSI 975
4126  5117          FGET R32                                          /PSI 976
4127     6          FNEG                                              /PSI 977
4130     5          FATN                                              /PSI 978
4131  6375          FPUT CPHI            /CPHI#ARTAN(-R32/-R31)       /PSI 979
4132  5122          FGET R13                                          /PSI 980
4133  6755          FPUT I ADRB                                       /PSI 981
4134  5125          FGET R23                                          /PSI 982
4135     6          FNEG                                              /PSI 983
4136     5          FATN                                              /PSI 984
4137  6367          FPUT COMG            /COMG#ARTAN(-R23/R13)        /PSI 985
4140     0          FEXT                                              /PSI 986
4141  5600          JMP I AZANG                                       /PSI 987
4142  4407  SPEC,   JMS I LFPT           /SPECIAL CASE                /PSI 988
4143  5111          FGET R12                                          /PSI 989
4144  6755          FPUT I ADRB                                       /PSI 990
4145  5100          FGET R11                                          /PSI 991
4146     6          FNEG                                              /PSI 992
4147     5          FATN                                              /PSI 993
4150  6375          FPUT CPHI            /CPHI#ARTAN(-R11/R12)        /PSI 994
4151  5761          FGET I AK90                                       /PSI 995
4152  6367          FPUT COMG            /COMG#90                     /PSI 996
4153     0          FEXT                                              /PSI 997
4154  5600          JMP I AZANG          /RETURN                      /PSI 998
4155  5507  ADRB,   BATN                                              /PSI 999
4156  7762  KSPEC,  7762                                              /PSI1000
4157  2476          2476                                              /PSI1001
4160  1326          1326                                              /PSI1002
4161  5523  AK90,   K90                                               /PSI1003
4162  2560  LPSI,   PSI                                               /PSI1004
4163  7633  LWVL,   WVL                                               /PSI1005
4164     0  CTTH,   0                                                 /PSI1006
4165     0          0                                                 /PSI1007
4166     0          0                                                 /PSI1008
4167     0  COMG,   0                                                 /PSI1009
4170     0          0                                                 /PSI1010
4171     0          0                                                 /PSI1011
4172     0  CCHI,   0                                                 /PSI1012
4173     0          0                                                 /PSI1013
4174     0          0                                                 /PSI1014
4175     0  CPHI,   0                                                 /PSI1015
4176     0          0                                                 /PSI1016
4177     0          0                                                 /PSI1017
                                                                      /PSI1018
             *4200                                                    /PSI1019
             /ZS. SET UP STANDARD REFLECTION                          /PSI1020
4200  3214  SSTD,   DCA PSTD            /PSTD#0                      /PSI1021
4201  4473          JMS I LINTIN         /READ NUMBER OF STANDARDS    /PSI1022
4202  7650          SNA CLA                                           /PSI1023
4203  5466          JMP I LOMGA          /IF 0, GO TO WAITING LOOP    /PSI1024
4204  4473          JMS I LINTIN         /READ PERIOD OF STANDARD     /PSI1025
4205  3214          DCA PSTD                                          /PSI1026
4206  7040          CMA                  /SET KSTD#-1                 /PSI1027
4207  3215          DCA KSTD                                          /PSI1028
4210  4426          JMS I LFNP           /READ INDICES AND PSI OF STANDARD /PSI1029
4211  7774          -4                                                /PSI1030
4212  4216          HS                                                /PSI1031
4213  5466          JMP I LOMGA          /GO TO WAITING LOOP          /PSI1032
4214     0  PSTD,   0                                                 /PSI1033
4215     0  KSTD,   0                                                 /PSI1034
4216     0  HS,     0                                                 /PSI1035
4217     0          0                                                 /PSI1036
4220     0          0                                                 /PSI1037
4221     0  KS,     0                                                 /PSI1038
4222     0          0                                                 /PSI1039
4223     0          0                                                 /PSI1040
4224     0  LS,     0                                                 /PSI1041
4225     0          0                                                 /PSI1042
4226     0          0                                                 /PSI1043
4227     0  PSIS,   0                                                 /PSI1044
4230     0          0                                                 /PSI1045
4231     0          0                                                 /PSI1046
                                                                      /PSI1047
             /SUBROUTINE TO MEASURE STANDARD PERIODICALLY             /PSI1048
4232     0  STD,    0                                                 /PSI1049
4233  1214          TAD PSTD             /TEST PSTD                   /PSI1050
4234  7650          SNA CLA                                           /PSI1051
4235  5632          JMP I STD            /IF ZERO, NO STANDARD, RETURN /PSI1052
4236  2215          ISZ KSTD             /TEST COUNTER                /PSI1053
```

```
4237  5632          JMP I STD          /NOT ZERO, RETURN                          /PSI1054
4240  1214          TAD PSTD           /RESET COUNTER                             /PSI1055
4241  7041          CIA                                                           /PSI1056
4242  7001          IAC                                                           /PSI1057
4243  3215          DCA KSTD                                                      /PSI1058
4244  4424          JMS I LCOP         /COPY INDICES AND PSI OF STANDARD TO LOCATI/PSI1059
4245  7764          -14                /BY ANGLE CALCULATOR                       /PSI1060
4246  4216          HS                                                            /PSI1061
4247  2547  ADFH,   FH                 /CONSTANT USED BY SUBROUTINE PIA           /PSI1062
4250  4404          JMS I LANG         /COMPUTE ANGLES                            /PSI1063
4251  4544          JMS I LPRNT        /PRINT INDICATOR OF STANDARD, SHARP S      /PSI1064
4252  4323          4323                                                          /PSI1065
4253  4436          JMS I LDAT         /JUMP TO DATA COLLECTION                   /PSI1066
4254  7000          NOP                /OUT OF RANGE, DATA NOT COLLECTED          /PSI1067
4255  4544          JMS I LPRNT        /PRINT SHARP-C                             /PSI1068
4256  4303          4303                                                          /PSI1069
4257  4565          JMS I LCRLF                                                   /PSI1070
4260  4666          JMS I LCHK         /CHECK POSITION                            /PSI1071
4261     1          1                                                             /PSI1072
4262  7000          NOP                                                           /PSI1073
4263  4565          JMS I LCRLF                                                   /PSI1074
4264  4667          JMS I LLEAD        /PUNCH LEADER                              /PSI1075
4265  5632          JMP I STD          /RETURN                                    /PSI1076
4266  1025  LCHK,   CHECK                                                         /PSI1077
4267  2563  LLEAD,  LEAD                                                          /PSI1078
                                                                                  /PSI1079
            /SUBROUTINE TO PRINT INDICES AND ANGLES                               /PSI1080
4270     0  PIA,    0                                                             /PSI1081
4271  4544          JMS I LPRNT        /PRINT SHARP-I                             /PSI1082
4272  4311          4311                                                          /PSI1083
4273  1156          TAD MTHR           /LOOP TO PRINT INDICES                     /PSI1084
4274  3322          DCA KPIA                                                      /PSI1085
4275  1247          TAD ADFH                                                      /PSI1086
4276  3323          DCA LINDX                                                     /PSI1087
4277  4407  PIA1,   JMS I LFPT                                                    /PSI1088
4300  5723          FGET I LINDX                                                  /PSI1089
4301     0          FEXT                                                          /PSI1090
4302  4716          JMS I PVFOUT                                                  /PSI1091
4303     4          4                                                             /PSI1092
4304     0          0                                                             /PSI1093
4305  1154          TAD THR                                                       /PSI1094
4306  1323          TAD LINDX                                                     /PSI1095
4307  3323          DCA LINDX                                                     /PSI1096
4310  2322          ISZ KPIA                                                      /PSI1097
4311  5277          JMP PIA1                                                      /PSI1098
4312  4427          JMS I LFOP         /PRINT CALCULATED ANGLES                   /PSI1099
4313  7774          -4                                                            /PSI1100
4314  4164          CTTH                                                          /PSI1101
4315  5670          JMP I PIA          /RETURN                                    /PSI1102
4316  7200  PVFOUT, VFOUT                                                         /PSI1103
                                                                                  /PSI1104
            /TEST TO SEE IF OMEGA, 2THETA, CHI COMBINATION IS ACCESSABLE          /PSI1105
4317     0  ACCESS, 0                                                            /PSI1106
4320  4423          JMS I LADR         /GET ADDRESSES OF INDICATORS               /PSI1107
4321  7776          -2                                                            /PSI1108
4322     0  TCH,KPIA,0                 /TEMPORARIES USED ALSO BY SUBROUTINE PIA   /PSI1109
4323     0  TOT,LINDX,0                                                          /PSI1110
4324  1722          TAD I TCH          /IS ONE BIT OF CHI INDICATOR SET           /PSI1111
4325  7010          RAR                                                           /PSI1112
4326  7620          SNL CLA                                                       /PSI1113
4327  5337          JMP ACCPT          /NO, ACCEPT                                /PSI1114
4330  1722          TAD I TCH          /YES, IS TWO BIT OF CHI INDICATOR SET      /PSI1115
4331  7012          RTR                                                           /PSI1116
4332  7620          SNL CLA                                                       /PSI1117
4333  5341          JMP ACC1           /NO                                        /PSI1118
4334  1723          TAD I TOT          /YES, IS TWO BIT OF OMEGA-THETA INDICATOR S/PSI1119
4335  7012          RTR                                                           /PSI1120
4336  7620          SNL CLA                                                       /PSI1121
4337  2317  ACCPT,  ISZ ACCESS         /NO, ACCEPT                                /PSI1122
4340  5717          JMP I ACCESS                                                  /PSI1123
4341  1723  ACC1,   TAD I TOT          /IS ONE BIT OF OMEGA-THETA INDICATOR SET   /PSI1124
4342  7010          RAR                                                           /PSI1125
4343  7620          SNL CLA                                                       /PSI1126
4344  2317          ISZ ACCESS         /NO, ACCEPT                                /PSI1127
4345  5717          JMP I ACCESS       /YES, REJECT                               /PSI1128
                                                                                  /PSI1129
            /PART OF SUBROUTINE RANGE TO ADJUST ANGLES                            /PSI1130
4346  2137  BIG,    ISZ IOTREG         /TEST INDICATOR                            /PSI1131
4347  1370          TAD SUBMAD         /COMPUTED OMEGA TOO BIG, SET TO SUBTRACT 18/PSI1132
4350  1362          TAD ADDINS         /COMPUTED OMEGA TOO SMALL, SET TO ADD 180. /PSI1133
4351  3354          DCA OTEST                                                     /PSI1134
```

```
4352  4407          JMS I LFPT                                                  /PSI1135
4353  5773          FGET I ACOMG          /ADJUST COMPUTED OMEGA                /PSI1136
4354     0  OTEST,  0                     /VARIABLE INSTRUCTION                 /PSI1137
4355  6773          FPUT I ACOMG                                                /PSI1138
4356  5774          FGET I ACCHI          /CCHI#-CCHI                           /PSI1139
4357     6          FNEG                                                        /PSI1140
4360  6774          FPUT I ACCHI                                                /PSI1141
4361  5775          FGET I ACPHI          /CPHI#CPHI+180                        /PSI1142
4362  1376  ADDINS, FADD C180                                                   /PSI1143
4363  6775          FPUT I ACPHI                                                /PSI1144
4364     0          FEXT                                                        /PSI1145
4365  2130          ISZ KRNG              /TEST COUNTER                         /PSI1146
4366  5771          JMP I LRTN            /RETURN TO TEST ADJUSTED ANGLES       /PSI1147
4367  5772          JMP I LRJCT           /ANGLES HAVE ALREADY BEEN ADJUSTED ONCE, RE/PSI1148
4370  1000  SUBMAD, 1000                  /FSUB C180 - FADD C180                /PSI1149
4371  3005  LRTN,   RANGE+1                                                    /PSI1150
4372  3157  LRJCT,  REJECT                                                     /PSI1151
4373  4167  ACOMG,  COMG                                                       /PSI1152
4374  4172  ACCHI,  CCHI                                                       /PSI1153
4375  4175  ACPHI,  CPHI                                                       /PSI1154
4376    10  C180,   0010                                                       /PSI1155
4377  2640          2640                                                        /PSI1156
4400     0          0000                                                        /PSI1157
                                                                               /PSI1158
        *4401                                                                  /PSI1159
        /SUBROUTINE TO DRIVE OMEGA AND 2THETA SAFELY                           /PSI1160
4401     0  DRIVE,  0                                                          /PSI1161
4402  4407          JMS I LFPT            /TEST ABSF(TTHD-TTH)-ABSF(OMGD-OMG)   /PSI1162
4403  5114          FGET OMGD                                                   /PSI1163
4404  2664          FSUB I LOMG                                                 /PSI1164
4405     7          FABS                                                        /PSI1165
4406  6117          FPUT SAVE1            /SAVE ABSF(OMGD-OMG)                  /PSI1166
4407  5111          FGET TTHD                                                   /PSI1167
4410  2656          FSUB I LTTH                                                 /PSI1168
4411  6122          FPUT SAVE2            /SAVE TTHD-TTH                        /PSI1169
4412     7          FABS                                                        /PSI1170
4413  2117  SUB,    FSUB SAVE1            /COMPARE CHANGE FOR 2THETA WITH CHANGE FOR /PSI1171
4414     0          FEXT                                                        /PSI1172
4415  1045          TAD HORD                                                    /PSI1173
4416  7750          SPA SNA CLA                                                 /PSI1174
4417  5253          JMP DRIVE2                                                  /PSI1175
4420  4407          JMS I LFPT            /CHANGE IN 2THETA GREATER             /PSI1176
4421  5664          FGET I LOMG           /COMPUTE ABSF(OMGD+C)-ABSF(OMG+C)     /PSI1177
4422  1261          FADD CNSTC                                                  /PSI1178
4423     7          FABS                                                        /PSI1179
4424  6125          FPUT SAVE3                                                  /PSI1180
4425  5114          FGET OMGD                                                   /PSI1181
4426  1261          FADD CNSTC                                                  /PSI1182
4427     7          FABS                                                        /PSI1183
4430  2125          FSUB SAVE3                                                  /PSI1184
4431     0          FEXT                                                        /PSI1185
4432  1045          TAD HORD                                                    /PSI1186
4433  7750          SPA SNA CLA                                                 /PSI1187
4434  5253          JMP DRIVE2                                                  /PSI1188
4435  1123          TAD SAVE2+1           /+, TEST SIGN OF CHANGE IN 2THETA     /PSI1189
4436  7710          SPA CLA                                                     /PSI1190
4437  1265          TAD ADD               /SET VARIABLE INSTRUCTION TO ADD OR SUBTRAC/PSI1191
4440  1213          TAD SUB               /ABSF(OMGD-OMG) FROM TTHD             /PSI1192
4441  3244          DCA DRIVE1                                                  /PSI1193
4442  4407          JMS I LFPT            /SET TO DRIVE 2THETA TO COMPUTED DIFFERENCE/PSI1194
4443  5111          FGET TTHD                                                   /PSI1195
4444     0  DRIVE1, 0                                                          /PSI1196
4445  6656          FPUT I LTTH                                                 /PSI1197
4446     0          FEXT                                                        /PSI1198
4447  4666          JMS I LMOTST          /DRIVE 2THETA, CHI, AND PHI           /PSI1199
4450  1673          TAD I AMIT            /WAIT FOR 2THETA TO STOP              /PSI1200
4451  7640          SZA CLA                                                     /PSI1201
4452  5250          JMP .-2                                                     /PSI1202
4453  4424  DRIVE2, JMS I LCOP            /SET TO DRIVE 2THETA AND OMEGA TO ORIGINAL /PSI1203
4454  7772          -6                    /DESTINATIONS                         /PSI1204
4455   111          TTHD                                                        /PSI1205
4456   624  LTTH,   TTH                                                        /PSI1206
4457  4666          JMS I LMOTST          /START MOTORS                         /PSI1207
4460  5601          JMP I DRIVE           /RETURN                               /PSI1208
4461     0  CNSTC,  0000                  /CNSTC#0 FOR BISECTING POSITION       /PSI1209
4462     0          0000                                                        /PSI1210
4463     0          0000                                                        /PSI1211
4464   627  LOMG,   OMG                                                        /PSI1212
4465  7000  ADD,    -1000                 /FADD SAVE1-FSUB SAVE1                /PSI1213
4466   517  LMOTST, MOTST                                                      /PSI1214
                                                                               /PSI1215
```

```
                /DT. DRIVE 2THETA TO ANGLE READ IN                                  /PSI1216
4467  4426      SETTHT, JMS I LFNP                                                  /PSI1217
4470  7777              -1                                                          /PSI1218
4471   624              TTH                                                         /PSI1219
4472  4562              JMS I LMOTOR                                                /PSI1220
4473  1476      AMIT,   MIT                                                         /PSI1221
4474  5466              JMP I LOMGA                                                 /PSI1222
                                                                                    /PSI1223
4475     6      DCONST, 0006                    /DCONST#+40                         /PSI1224
4476  2400              2400                                                        /PSI1225
4477     0              0000                                                        /PSI1226
                                                                                    /PSI1227
                *5371                                                               /PSI1228
                /OUTPUT TWO CHARACTERS                                              /PSI1229
5371     0      PRINT,  0                                                           /PSI1230
5372  1771              TAD I PRINT                                                 /PSI1231
5373  4776              JMS I LTY2                                                  /PSI1232
5374  2371              ISZ PRINT                                                   /PSI1233
5375  5771              JMP I PRINT                                                 /PSI1234
5376  7544      LTY2,   TY2                                                         /PSI1235
                                                                                    /PSI1236
                *5774                                                               /PSI1237
                /WV. READ WAVELENGTH                                                /PSI1238
5774  4426      WAVE,   JMS I LFNP                                                  /PSI1239
5775  7777              -1                                                          /PSI1240
5776  7633              WVL                                                         /PSI1241
5777  5466              JMP I LOMGA                                                 /PSI1242
                                                                                    /PSI1243
                *7556                                                               /PSI1244
                /PS. PRINT SCALE                                                    /PSI1245
7556  4407      PRSCAL, JMS I LFPT                                                  /PSI1246
7557  5766              FGET I ASCALE                                               /PSI1247
7560     0              FEXT                                                        /PSI1248
7561  4765              JMS I AVFOUT                                                /PSI1249
7562     7              7                                                           /PSI1250
7563     0              0                                                           /PSI1251
7564  5466              JMP I LOMGA                                                 /PSI1252
7565  7200      AVFOUT, VFOUT                                                       /PSI1253
7566  3245      ASCALE, SCALE                                                       /PSI1254
                                                                                    /PSI1255
7567     0      REF,    0000                    /REFERENCE REFLECTION, 0,1,10000    /PSI1256
7570     0              0000                                                        /PSI1257
7571     0              0000                                                        /PSI1258
7572     1              0001                                                        /PSI1259
7573  2000              2000                                                        /PSI1260
7574     0              0000                                                        /PSI1261
7575    16              0016                                                        /PSI1262
7576  2341              2341                                                        /PSI1263
7577  7773              7773                                                        /PSI1264
                *7636                                                               /PSI1265
                /DRIVE 2THETA AND OMEGA TO SAFE POSITION                            /PSI1266
7636  4407      SAFE,   JMS I LFPT              /SET SAFE VALUE FOR OMEGA TO DCONST-ABSF(TT/PSI1267
7637  5707              FGET I TTHL                                                 /PSI1268
7640  4151              FDIV TWO                                                    /PSI1269
7641     7              FABS                                                        /PSI1270
7642     6              FNEG                                                        /PSI1271
7643  1710              FADD I LDCON                                                /PSI1272
7644  6114              FPUT OMGD                                                   /PSI1273
7645     0              FEXT                                                        /PSI1274
7646  1045              TAD HORD                /TEST RESULT                        /PSI1275
7647  7700              SMA CLA                                                     /PSI1276
7650  5272              JMP SAFE1                                                   /PSI1277
7651  4407              JMS I LFPT              /IF -, SET SAFE VALUE FOR OMEGA TO ZERO, AN/PSI1278
7652  5576              FGET I ADZERO           /VALUE FOR 2THETA TO 2*DCONST       /PSI1279
7653  6114              FPUT OMGD                                                   /PSI1280
7654  5710              FGET I LDCON                                                /PSI1281
7655  3151              FMPY TWO                                                    /PSI1282
7656  6111              FPUT TTHD                                                   /PSI1283
7657  5707              FGET I TTHL                                                 /PSI1284
7660     0              FEXT                                                        /PSI1285
7661  1045              TAD HORD                                                    /PSI1286
7662  7700              SMA CLA                                                     /PSI1287
7663  5712              JMP I LRETN                                                 /PSI1288
7664  4407              JMS I LFPT              /IF CURRENT 2THETA IS -,NEGATE COMPUTED SAF/PSI1289
7665  5111              FGET TTHD                                                   /PSI1290
7666     6              FNEG                                                        /PSI1291
7667  6111              FPUT TTHD                                                   /PSI1292
7670     0              FEXT                                                        /PSI1293
7671  5712              JMP I LRETN             /RETURN                             /PSI1294
7672  4407      SAFE1,  JMS I LFPT              /IF COMPUTED SAFE OMEGA IS +, SET SAFE 2THE/PSI1295
7673  5707              FGET I TTHL             /CURRENT 2THETA                     /PSI1296
```

```
7674  6111          FPUT TTHD                                          /PSI1297
7675     0          FEXT                                               /PSI1298
7676  1711          TAD I LOMGP1          /TEST CURRENT OMEGA          /PSI1299
7677  7700          SMA CLA                                            /PSI1300
7700  5712          JMP I LRETN           /IF +, RETURN                /PSI1301
7701  4407          JMS I LFPT            /IF -, NEGATE COMPUTED SAFE OMEGA /PSI1302
7702  5114          FGET OMGD                                          /PSI1303
7703     6          FNEG                                               /PSI1304
7704  6114          FPUT OMGD                                          /PSI1305
7705     0          FEXT                                               /PSI1306
7706  5712          JMP I LRETN           /RETURN                      /PSI1307
7707   624  TTHL,   TTH                                                /PSI1308
7710  4475  LDCON,  DCONST                                             /PSI1309
7711   630  LOMGP1, OMG+1                                              /PSI1310
7712  3123  LRETN,  RNG4                                               /PSI1311


        /MODIFICATIONS OF INDICES AND PSI DATA COLLECTION PROGRAM FOR PARALLEL P/PSP   1
                                                                       /PSP   2
        HORD#45                                                        /PSP   3
        IOTREG#137                                                     /PSP   4
        LADR#23                                                        /PSP   5
        LFPT#7                                                         /PSP   6
        OMG#627                                                        /PSP   7
        OMGD#114                                                       /PSP   8
        RNG4#3123                                                      /PSP   9
        THETA#106                                                      /PSP  10
        TTH#624                                                        /PSP  11
        TTHD#111                                                       /PSP  12
        TWO#151                                                        /PSP  13
                                                                       /PSP  14
        *3431                                                          /PSP  15
        /TESTS TO DEFINE REGION IN OMEGA, 2THETA FOR PARALLEL POSITION /PSP  16
3431     0  OTREG,  0                                                  /PSP  17
3432  4423          JMS I LADR            /GET ADDRESSES OF OMEGA AND 2THETA /PSP  18
3433  7776          -2                                                 /PSP  19
3434     0  LT,IND, 0                     /TEMPORARIES ALSO USED BY /HP PROGRAM /PSP  20
3435     0  LO,TEM, 0                                                  /PSP  21
3436  3631          DCA I OTREG           /SET REGION INDICATOR TO ZERO /PSP  22
3437  4407          JMS I LFPT            /TEST 2THETA-F               /PSP  23
3440  5634          FGET I LT                                          /PSP  24
3441  2313          FSUB F                                             /PSP  25
3442     0          FEXT                                               /PSP  26
3443  1045          TAD HORD                                           /PSP  27
3444  7700          SMA CLA                                            /PSP  28
3445  5310          JMP OTREJ+1           /IF +, REJECT                /PSP  29
3446  4407          JMS I LFPT            /TEST THETA-OMEGA-C          /PSP  30
3447  5634          FGET I LT                                          /PSP  31
3450  4151          FDIV TWO                                           /PSP  32
3451  6106          FPUT THETA                                         /PSP  33
3452  2635          FSUB I LO                                          /PSP  34
3453  2316          FSUB C                                             /PSP  35
3454     0          FEXT                                               /PSP  36
3455  1045          TAD HORD                                           /PSP  37
3456  7710          SPA CLA                                            /PSP  38
3457  5310          JMP OTREJ+1           /REJECT, OMEGA TOO LARGE     /PSP  39
3460  4407          JMS I LFPT            /TEST THETA-OMEGA-CP         /PSP  40
3461  1321          FADD OMCP                                          /PSP  41
3462     0          FEXT                                               /PSP  42
3463  1045          TAD HORD                                           /PSP  43
3464  7710          SPA CLA                                            /PSP  44
3465  2631          ISZ I OTREG           /IF -, SET REGION INDICATOR TO ONE /PSP  45
3466  4407          JMS I LFPT            /TEST THETA+OMEGA-E          /PSP  46
3467  5106          FGET THETA                                         /PSP  47
3470  1635          FADD I LO                                          /PSP  48
3471  2324          FSUB E                                             /PSP  49
3472     0          FEXT                                               /PSP  50
3473  1045          TAD HORD                                           /PSP  51
3474  7710          SPA CLA                                            /PSP  52
3475  5307          JMP OTREJ             /REJECT, OMEGA TOO SMALL     /PSP  53
3476  4407          JMS I LFPT            /TEST THETA+OMEGA-EP         /PSP  54
3477  1327          FADD EMEP                                          /PSP  55
3500     0          FEXT                                               /PSP  56
3501  1045          TAD HORD                                           /PSP  57
3502  7710          SPA CLA                                            /PSP  58
3503  1151          TAD TWO               /IF -, ADD TWO TO REGION INDICATOR /PSP  59
3504  1631          TAD I OTREG                                        /PSP  60
3505  3631          DCA I OTREG                                        /PSP  61
3506  2231          ISZ OTREG             /ADVANCE TO NORMAL RETURN    /PSP  62
```

```
3507  7240  OTREJ,  CLA CMA              /IOTREG#-1 IF OMEGA TOO SMALL          /PSP  63
3510  3137          DCA IOTREG           /IOTREG#0 IF OMEGA TOO LARGE           /PSP  64
3511  2231          ISZ OTREG                                                   /PSP  65
3512  5631          JMP I OTREG          /RETURN                                /PSP  66
3513    10  F,      0010                 /F#156                                 /PSP  67
3514  2340          2340                                                        /PSP  68
3515     0          0000                                                        /PSP  69
3516     7  C,      0007                 /C#117                                 /PSP  70
3517  3520          3520                                                        /PSP  71
3520     0          0000                                                        /PSP  72
3521     5  CMCP,   0005                 /C-CP#-23, CP#140                      /PSP  73
3522  5100          5100                                                        /PSP  74
3523     0          0000                                                        /PSP  75
3524     6  E,      0006                 /E#-63                                 /PSP  76
3525  5040          5040                                                        /PSP  77
3526     0          0000                                                        /PSP  78
3527     5  EMEP,   0005                 /E-EP#-23, EP#-40                      /PSP  79
3530  5100          5100                                                        /PSP  80
3531     0          0000                                                        /PSP  81
                                                                                /PSP  82
            *4461                                                               /PSP  83
4461     7  CNSTC,  0007                 /CNSTC#90                              /PSP  84
4462  2640          2640                                                        /PSP  85
4463     0          0000                                                        /PSP  86
                                                                                /PSP  87
            *7636                                                               /PSP  88
            /SET TO DRIVE 2THETA AND OMEGA TO SAFE POSITION FOR PARALLEL POSITION /PSP  89
7636  4407  SAFE,   JMS I LFPT                                                  /PSP  90
7637  5701          FGET I TTHL          /OMGD#CPP+THETA                        /PSP  91
7640  4151          FDIV TWO                                                    /PSP  92
7641  2303          FSUB CPP                                                    /PSP  93
7642  6114          FPUT OMGD                                                   /PSP  94
7643  2306          FSUB G               /TEST OMGD-G                           /PSP  95
7644     0          FEXT                                                        /PSP  96
7645  1045          TAD HORD                                                    /PSP  97
7646  7700          SMA CLA                                                     /PSP  98
7647  5260          JMP SAFE1                                                   /PSP  99
7650  4407          JMS I LFPT           /IF -, OMGD#G                          /PSP 100
7651  5306          FGET G                                                      /PSP 101
7652  6114          FPUT OMGD                                                   /PSP 102
7653  1303          FADD CPP             /TTHD#2*(CPP+G)                        /PSP 103
7654  3151          FMPY TWO                                                    /PSP 104
7655  6111          FPUT TTHD                                                   /PSP 105
7656     0          FEXT                                                        /PSP 106
7657  5702          JMP I LRETN          /RETURN                                /PSP 107
7660  4407  SAFE1,  JMS I LFPT           /IF OMGD-G +, TTHD#2THETA              /PSP 108
7661  5701          FGET I TTHL                                                 /PSP 109
7662  6111          FPUT TTHD                                                   /PSP 110
7663  5700          FGET I OMGL          /TEST OMEGA-G                          /PSP 111
7664  2306          FSUB G                                                      /PSP 112
7665     0          FEXT                                                        /PSP 113
7666  1045          TAD HORD                                                    /PSP 114
7667  7700          SMA CLA                                                     /PSP 115
7670  5702          JMP I LRETN          /IF +, RETURN                          /PSP 116
7671  4407          JMS I LFPT           /IF -, OMGD#2G-OMGD                    /PSP 117
7672  5306          FGET G                                                      /PSP 118
7673  1306          FADD G                                                      /PSP 119
7674  2114          FSUB OMGD                                                   /PSP 120
7675  6114          FPUT OMGD                                                   /PSP 121
7676     0          FEXT                                                        /PSP 122
7677  5702          JMP I LRETN          /RETURN                                /PSP 123
7700   627  OMGL,   OMG                                                         /PSP 124
7701   624  TTHL,   TTH                                                         /PSP 125
7702  3123  LRETN,  RNG4                                                        /PSP 126
7703    10  CPP,    0010                 /CPP#140                               /PSP 127
7704  2140          2140                                                        /PSP 128
7705     0          0000                                                        /PSP 129
7706     7  G,      0007                 /G#-90                                 /PSP 130
7707  5140          5140                                                        /PSP 131
7710     0          0000                                                        /PSP 132


            /REVISED BINARY LOADER                                              /BLD   1
            /START AT 7777                                                      /BLD   2
            /PROGRAM HALTS IF THERE IS A CHECK SUM ERROR,                       /BLD   3
            /WITH CHECK SUM DIFFERENCE IN AC                                    /BLD   4
            /CAN BE USED WITH EITHER THE 6032 OR THE 6004 READER MODE           /BLD   5
                                                                                /BLD   6
            *7714                                                               /BLD   7
```

```
7714     0          0                    /TEMPORARY                                  /BLD   8
7715   200  CON,    200                                                              /BLD   9
7716     0  CKT,    0                                                                /BLD  10
7717     0  CKSM,   0                                                                /BLD  11
7720     0  WORD,   0                                                                /BLD  12
                                                                                     /BLD  13
7721     0  BEGG,   0                                                                /BLD  14
7722  6032          KCC                                                              /BLD  15
7723  6004          6004                                                             /BLD  16
7724  6031          KSF                                                              /BLD  17
7725  5324          JMP .-1                                                          /BLD  18
7726  6034          KRS                                                              /BLD  19
7727   315          AND CON                                                          /BLD  20
7730  7650          SNA CLA                                                          /BLD  21
7731  2321          ISZ BEGG             /SET RETURN FOR VALID WORD                  /BLD  22
7732  5721          JMP I BEGG                                                       /BLD  23
                                                                                     /BLD  24
7733  6032  BEGN,   KCC                                                              /BLD  25
7734  3317          DCA CKSM                                                         /BLD  26
7735  4321          JMS BEGG                                                         /BLD  27
7736  5335          JMP .-1              /SEES LEADER                                /BLD  28
7737  6036  GO,     KRB                                                              /BLD  29
7740  3316          DCA CKT              /SAVE PARTIAL CHECK SUM                     /BLD  30
7741  6036          KRB                                                              /BLD  31
7742  7106          RTL CLL                                                          /BLD  32
7743  7006          RTL                                                              /BLD  33
7744  7006          RTL                                                              /BLD  34
7745  6004          6004                                                             /BLD  35
7746  6031          KSF                                                              /BLD  36
7747  5346          JMP .-1                                                          /BLD  37
7750  6034          KRS                                                              /BLD  38
7751  3320          DCA WORD             /SAVE ASSEMBLED WORD                        /BLD  39
7752  6036          KRB                                                              /BLD  40
7753  1316          TAD CKT                                                          /BLD  41
7754  3316          DCA CKT              /SAVE CHECK SUM                             /BLD  42
7755  4321          JMS BEGG                                                         /BLD  43
7756  5372          JMP END              /SEES TRAILER                               /BLD  44
7757  1320          TAD WORD             /CURRENT WORD IS NOT A PUNCHED CHECK SUM    /BLD  45
7760  7420          SNL                                                              /BLD  46
7761  5364          JMP DATA                                                         /BLD  47
7762  3314  ORIG,   DCA CON-1            /RESET ORIGIN                               /BLD  48
7763  5366          JMP CHEX                                                         /BLD  49
7764  3714  DATA,   DCA I CON-1          /STORE DATA WORD                            /BLD  50
7765  2314          ISZ CON-1                                                        /BLD  51
7766  1316  CHEX,   TAD CKT              /UPDATE CHECK SUM                           /BLD  52
7767  1317          TAD CKSM                                                         /BLD  53
7770  3317          DCA CKSM                                                         /BLD  54
7771  5337          JMP GO               /PROCESS NEXT WORD                          /BLD  55
7772  1317  END,    TAD CKSM             /COMPARE CHECK SUMS                         /BLD  56
7773  7041          CIA                                                              /BLD  57
7774  1320          TAD WORD                                                         /BLD  58
7775  7440          SZA                                                              /BLD  59
7776  7402          HLT                  /DISPLAY CHECK SUM DIFFERENCE               /BLD  60
7777  5333          JMP BEGN                                                         /BLD  61


        /TAPE-MEMORY COMPARISON FOR USE WITH REVISED BINARY LOADER                   /TMC   1
        /REQUIRES USER TO MODIFY BINARY LOADER AFTER LOADING THIS PROGRAM            /TMC   2
        /CHANGE LOCATION 7764 TO 5273                                                /TMC   3
        /START AT 7777                                                               /TMC   4
        /HALTS AT 7703 IF TAPE AND MEMORY ARE DIFFERENT WITH ADDRESS OF ERROR WO/TMC   5
            /PRESS CONTINUE TO DISPLAY ERROR WORD IN AC                              /TMC   6
            /PRESS CONTINUE AGAIN TO DISPLAY WORD READ FROM TAPE                     /TMC   7
            /PRESS CONTINUE AGAIN TO PROCEED WITH COMPARISON                         /TMC   8
        /HALTS AT 7776 IF CHECK SUM ERROR WITH CHECK SUM DIFFERENCE IN AC            /TMC   9
        /TO RESTORE LOADER CHANGE 7764 TO 3714                                       /TMC  10
                                                                                     /TMC  11
        *7673                                                                        /TMC  12
        CON#7715                                                                     /TMC  13
        CHEX#7766                                                                    /TMC  14
        WORD#7720                                                                    /TMC  15
                                                                                     /TMC  16
7673  7041  COMP,   CIA                                                              /TMC  17
7674  1714          TAD I CON-1                                                      /TMC  18
7675  7650          SNA CLA                                                          /TMC  19
7676  5365          JMP CHEX-1           /TAPE AND MEMORY ARE THE SAME               /TMC  20
7677  1320          TAD WORD                                                         /TMC  21
7700  7650          SNA CLA                                                          /TMC  22
7701  5365          JMP CHEX-1           /WORD ON TAPE IS ZERO, PROBABLY TEMPORARY,  /TMC  23
```

```
7702  1314          TAD CON-1          /DIFFERENCE FOUND                    /TMC  24
7703  7402          HLT                /DISPLAY ADDRESS                     /TMC  25
7704  7200          CLA                                                     /TMC  26
7705  1714          TAD I CON-1        /DISPLAY ERROR WORD                  /TMC  27
7706  7402          HLT                                                     /TMC  28
7707  7200          CLA                                                     /TMC  29
7710  1320          TAD WORD           /DISPLAY WORD READ FROM TAPE         /TMC  30
7711  7402          HLT                                                     /TMC  31
7712  7200          CLA                                                     /TMC  32
7713  5365          JMP CHEX-1         /CONTINUE COMPARISON                 /TMC  33


            /BINARY PUNCH 33                                               /BPU   1
            *7600                                                          /BPU   2
7600  7300  BPUN, CLA          CLL                                         /BPU   3
7601  6046        TLS                /INITIALIZE PUNCH                    /BPU   4
7602  3277        DCA          CKSM  /0 TO CKSM                           /BPU   5
7603  4240        JMS          PLOT  /PUNCH LEADER                        /BPU   6
7604  7402        HLT                /SET SR#NB                           /BPU   7
7605  7604        LAS                                                     /BPU   8
7606  7041        CIA                                                     /BPU   9
7607  3300        DCA          NB    /-NB#MINUS NO.OF BLKS                /BPU  10
7610  7402  NXBL, HLT                /SET SR#IA                           /BPU  11
7611  7604        LAS                                                     /BPU  12
7612  3301        DCA          IA    /INITIAL ADDRESS                     /BPU  13
7613  7402        HLT                /SET SR#FA                           /BPU  14
7614  7604        LAS                                                     /BPU  15
7615  3302        DCA          FA    /FINAL ADDRESS                       /BPU  16
7616  1301        TAD          IA                                         /BPU  17
7617  7120        STL                /SET L#1 TO PUNCH SA                 /BPU  18
7620  4253  PUN,  JMS          BINP                                       /BPU  19
7621  1301        TAD          IA                                         /BPU  20
7622  7041        CIA                                                     /BPU  21
7623  1302        TAD          FA                                         /BPU  22
7624  7710        SPA          CLA                                        /BPU  23
7625  5232        JMP          .+5   /NEXT BLOCK OR END                   /BPU  24
7626  1701        TAD    I     IA    /NEXT WORD                           /BPU  25
7627  7100        CLL                                                     /BPU  26
7630  2301        ISZ          IA    /JUST AN INDEXER                     /BPU  27
7631  5220        JMP          PUN                                        /BPU  28
7632  2300        ISZ          NB                                         /BPU  29
7633  5210        JMP          NXBL  /GO TO NEXT BLOCK                    /BPU  30
7634  1277        TAD          CKSM  /WAS LAST BLOCK                      /BPU  31
7635  4253        JMS          BINP                                       /BPU  32
7636  4240        JMS          PLOT                                       /BPU  33
7637  7402        HLT                /END                                 /BPU  34
7640     0  PLOT, 0                                                      /BPU  35
7641  7300        CLA          CLL                                        /BPU  36
7642  1303        TAD          M212                                       /BPU  37
7643  3304        DCA          CTR1                                       /BPU  38
7644  1305        TAD          C200                                       /BPU  39
7645  6041        TSF                                                     /BPU  40
7646  5245        JMP          .-1                                        /BPU  41
7647  6046        TLS                                                     /BPU  42
7650  2304        ISZ          CTR1                                       /BPU  43
7651  5245        JMP          .-4                                        /BPU  44
7652  5640        JMP    I     PLOT                                       /BPU  45
7653     0  BINP, 0                                                      /BPU  46
7654  3306        DCA          TEM1                                       /BPU  47
7655  1306        TAD          TEM1                                       /BPU  48
7656  7012        RTR                                                     /BPU  49
7657  7012        RTR                                                     /BPU  50
7660  7012        RTR                                                     /BPU  51
7661   307        AND          SL7                                        /BPU  52
7662  6041        TSF                                                     /BPU  53
7663  5262        JMP          .-1                                        /BPU  54
7664  6046        TLS                                                     /BPU  55
7665  1277        TAD          CKSM                                       /BPU  56
7666  3277        DCA          CKSM                                       /BPU  57
7667  1306        TAD          TEM1                                       /BPU  58
7670   310        AND          SL6                                        /BPU  59
7671  6041        TSF                                                     /BPU  60
7672  5271        JMP          .-1                                        /BPU  61
7673  6046        TLS                                                     /BPU  62
7674  1277        TAD          CKSM                                       /BPU  63
7675  3277        DCA          CKSM                                       /BPU  64
7676  5653        JMP    I     BINP                                       /BPU  65
7677     0  CKSM, 0                                                      /BPU  66
7700     0  NB,   0                                                      /BPU  67
```

```
7701     0  IA,    0                                        /BPU  68
7702     0  FA,    0                                        /BPU  69
7703  7566  M212,  7566                                     /BPU  70
7704     0  CTR1,  0                                        /BPU  71
7705   200  C200,  200                                      /BPU  72
7706     0  TEM1,  0                                        /BPU  73
7707   177  SL7,   0177                                     /BPU  74
7710    77  SL6,   0077                                     /BPU  75
```

APPENDIX A. MOTOR-DRIVE TEST PROGRAM

The motor-drive test program is an independent routine used to study the behavior of the SloSyn motors and the photoelectric marker interrupt. Originally it was used to try different pulsing patterns for starting the motors slowly. At present we use the program periodically to correlate the marker interrupts with the instrument dial readings and to adjust the marker-generator slots so that the time elapsed between motor pulse and marker interrupt is approximately equal in the forward and reverse directions.

INSTRUCTIONS FOR MOTOR-DRIVE TEST PROGRAM

1) Set up motor commands: load the forward command for the desired motor into location 0150 and the backward command into location 0151.

   Commands to step motors:

Motor	Forward	Backward
2θ	6322	6321
ω	6324	6331
χ	6334	6332
ϕ	6341	6342

2) Slow-start table is preset to 5 entries: 20, 4, 3, 2, 1. The table may be altered as follows:

   a) The total number of entries which are to follow in the table is stored in location 0600.

   b) The octal entries themselves are loaded into location 0601 and the following locations.

3) Load address 0200. Do <u>not</u> start.

4) Set up the switch register as follows:

0	1	2	3	4	5	6	7	8	9	10	11
		Number of pulses (binary)									

0 Off for single direction.
On for oscillating back and forth.

1 Off for initial pass forward.
On for initial pass backward.

2-11 The binary number of motor pulses to be executed.

5) Start the program. Each time the motor reverses direction the number of pulses to be executed for each pass and the motor commands are stored in a table. Whenever a marker interrupt occurs, a counter of the time elapsed between the last pulsing of the motor and the reception of the marker is stored along with the number of pulses given since the last marker was encountered.

When switch 0 is turned off, the program will type the table in decimal numbers and will halt at 0177.

6) Modify the switches if desired and continue. If the program is stopped manually, then start again with step 3.

TYPICAL OUTPUT OF MOTOR-DRIVE TEST PROGRAM

We instructed program to issue 8 motor pulses. → 0008-0799 ← Decimal representation of IOT command 6341, pulse phi forward.

No photoelectric marker interrupt occurred. → 0008-0799
0119 0005

0003-0798 ← Decimal representation of IOT command 6342, pulse phi backward.

0001-0798
0111 0001

0001-0799
0104 0001

Marker interrupt occurred 106 x 30 μsec after termination of the clock interrupt during which the motor pulse was executed. → 0001-0798
0104 0001

0300-0798
0106 0200 ← Photoelectric marker interrupt occurred after motor pulse number 200 was executed.

0300-0798
0106 0100
0107 0300

0401-0798
0095 0001
0083 0201
0082 0401

The marker interrupt had already occurred when the clock interrupt was terminated. → 0401-0799
0095 0001
0000 0202
0085 0401

0401-0798
0099 0001
0000 0202
0084 0401

LISTING OF MOTOR-DRIVE TEST PROGRAM

```
          /MOTOR DRIVE TEST PROGRAM                                          /MDT   1
          /SEPARATE PROGRAM TO TEST THE MOTORS AND TO AID IN THE ADJUSTMENT OF THE/MDT   2
          /     ONE-DEGREE MARKERS.                                          /MDT   3
          /FOR PDP-5. SEE BELOW FOR CHANGE TAPE FOR PDP-8                    /MDT   4
                                                                             /MDT   5
          *0002                                                              /MDT   6
  2  5403        JMP I       LINT                                            /MDT   7
  3   266  LINT, INT                                                         /MDT   8
          *135                                                               /MDT   9
135     0  K,    0                  /TIMER                                   /MDT  10
136     0  TMP,  0                  /TEMPORARY                               /MDT  11
137     0  TCOM, 0                                                           /MDT  12
140  1777  MSK1, 1777                                                        /MDT  13
141   377  MSK2, 0377                                                        /MDT  14
142  7400  MRKK, 7400                                                        /MDT  15
143   601  LIPT, 0601              /LOCATION OF PULSE INTERVAL TALBE        /MDT  16
144  1000  LST,  1000              /LOCATION OF STORAGE                     /MDT  17
145   777  LSTI, 777                                                         /MDT  18
146   600  LIP,LMIT, 0600                                                    /MDT  19
147     0  MI,   0                  /VARIABLES                               /MDT  20
150     0  FCOM, 0                                                           /MDT  21
151     0  BCOM, 0                                                           /MDT  22
152     0  SR,   0                                                           /MDT  23
153     0  MC,   0                                                           /MOT  24
154     0  SVLK, 0                                                           /MDT  25
155     0  CALT, 0                                                           /MDT  26
156     0  NST,  0                                                           /MDT  27
157     0  MK,   0                                                           /MDT  28
160     0  IT,   0                                                           /MDT  29
161     0  IP,   0                                                           /MDT  30
162     0  PC,   0                                                           /MDT  31
163     0  ARRK, 0                                                           /MDT  32
164     0  STOR, 0                                                           /MDT  33
165     0  SVAC, 0                                                           /MDT  34
166     0  STN,  0                                                           /MDT  35
167     0  LIPC, 0                                                           /MDT  36
170   764  NSTM, 764                /MAX ALLOWED VALUE OF NO. OF ENTRIES IN STORAGE /MDT  37
                                                                             /MDT  38
          *177                                                               /MDT  39
177  7402        HLT                 /WAIT FOR SWITCHES TO BE SET             /MDT  40
200  6311        6311                /CLEAR CLOCK FLAG                        /MDT  41
201  7240        CLA   CMA           /CLEAR STATUS FLAGS                      /MDT  42
202  6304        6304                                                         /MDT  43
203  6042        TCF                 /CLEAR PRINTER FLAG                      /MDT  44
204  6032        KCC                 /CLEAR READER FLAG AND AC                /MDT  45
205  3147        DCA         MI      /MOTOR INDICATOR OFF                     /MDT  46
206  6001        ION                 /ENABLE INTERRUPT                        /MDT  47
207  7604  CTL1, LAS                                                          /MDT  48
210  3152        DCA         SR      /SAVE SWITCH REGISTER                    /MDT  49
211  1152        TAD         SR      /READ NUMBER OF PULSES                   /MDT  50
212   140        AND         MSK1                                             /MDT  51
213  3153        DCA         MC                                               /MDT  52
214  1152        TAD         SR      /TEST SWITCH 1. IF ON, START BACKWARD. IF OFF, F/MDT  53
215  7006        RTL                                                          /MDT  54
216  7200        CLA                                                          /MDT  55
217  1150        TAD         FCOM                                             /MDT  56
220  7430        SZL                                                          /MDT  57
221  5226        JMP         BACK                                             /MDT  58
222  3330        DCA         COM                                              /MDT  59
223  1151        TAD         BCOM                                             /MDT  60
224  3155        DCA         CALT                                             /MDT  61
225  5231        JMP         BACK+3                                           /MDT  62
226  3155  BACK, DCA         CALT                                             /MDT  63
227  1151        TAD         BCOM                                             /MDT  64
230  3330        DCA         COM                                              /MDT  65
231  3156        DCA         NST     /SET NO. ENTRIES IN STORAGE #0.          /MDT  66
232  1153  CTL4, TAD         MC      /SET PULSE COUNTER                       /MDT  67
233  7041        CIA                                                          /MDT  68
234  3157        DCA         MK                                               /MDT  69
235  1153        TAD         MC      /STORE COMMAND AND COUNTER IN TABLE      /MDT  70
236  4345        JMS         STRR                                             /MDT  71
237  1330        TAD         COM                                              /MDT  72
240  4345        JMS         STRR                                             /MDT  73
241  7001        IAC                                                          /MDT  74
242  3160        DCA         IT      /SET INDEX FOR TABLE #1                  /MDT  75
243  1543        TAD   I     LIPT    /SET PULSE INTERVAL                      /MDT  76
244  7041        CIA                                                          /MDT  77
245  3161        DCA         IP                                               /MDT  78
```

```
246  3162        DCA          PC     /SET PULSE COUNT #0                          /MDT  79
247  7001        IAC                 /START MOTORS                                /MDT  80
250  3147        DCA          MI     /MOTOR INDICATOR ON                          /MDT  81
251  2135        ISZ          K      /INCREMENT TIMER                             /MDT  82
252  5251        JMP          .-1                                                 /MDT  83
253  7604  MOFF, LAS                 /TEST SWITCH ZERO                            /MDT  84
254  7700        SMA    CLA                                                       /MDT  85
255  5665        JMP    I     CTL5   /JUMP IF OFF                                 /MDT  86
256  1330        TAD          COM    /IF ON, INTERCHANGE COM AND CALT             /MDT  87
257  3137        DCA          TCOM                                                /MDT  88
260  1155        TAD          CALT                                                /MDT  89
261  3330        DCA          COM                                                 /MDT  90
262  1137        TAD          TCOM                                                /MDT  91
263  3155        DCA          CALT                                                /MDT  92
264  5232        JMP          CTL4                                                /MDT  93
265   400  CTL5, 0400                                                             /MDT  94
                                                                                  /MDT  95
266  3165  INT,  DCA          SVAC                                                /MDT  96
267  7204        GLK                 /SAVE CONTENTS OF AC AND LINK                /MDT  97
270  3154        DCA          SVLK                                                /MDT  98
271  6312        6312                /SKIP IF CLOCK FLAG IS OFF                   /MDT  99
272  5310        JMP          CLK                                                 /MDT 100
273  6301        6301                /OR STATUS REGISTER INTO AC                  /MDT 101
274  7450        SNA                                                             /MDT 102
275  7402        HLT                 /NOT CLOCK OR STATUS REGISTER INTERRUPT      /MDT 103
276   141        AND          MSK2   /MASK OFF MARKER FLAGS                       /MDT 104
277  7640        SZA    CLA                                                       /MDT 105
300  7402        HLT                 /HALT IF LIMIT SWITCH                        /MDT 106
301  1135        TAD          K      /STORE TIMER                                 /MDT 107
302  4345        JMS          STRR                                                /MDT 108
303  1162        TAD          PC     /STORE PULSE COUNT                           /MDT 109
304  4345        JMS          STRR                                                /MDT 110
305  1142  STRE, TAD          MRKK   /TURN OFF MARKER FLAGS                       /MDT 111
306  6304        6304                                                            /MDT 112
307  5337        JMP          EXIT   /EXIT                                        /MDT 113
310  1147  CLK,  TAD          MI     /TEST MOTOR INDICATOR                        /MDT 114
311  7650        SNA    CLA                                                       /MDT 115
312  5336        JMP          CLKE                                                /MDT 116
313  2161        ISZ          IP     /INCREMENT AND TEST PULSE INTERVAL COUNT     /MDT 117
314  5336        JMP          CLKE   /EXIT IF NOT ZERO                            /MDT 118
315  1546        TAD    I     LMIT   /TEST TABLE INDEX AGAINST MAX                /MDT 119
316  7041        CIA                                                             /MDT 120
317  1160        TAD          IT                                                  /MDT 121
320  7640        SZA    CLA                                                       /MDT 122
321  2160        ISZ          IT     /INCREMENT INDEX IF NOT #MAX                 /MDT 123
322  1146        TAD          LIP    /SELECT PULSE INTERVAL COUNTER               /MDT 124
323  1160        TAD          IT                                                  /MDT 125
324  3167        DCA          LIPC                                                /MDT 126
325  1567        TAD    I     LIPC                                                /MDT 127
326  7041        CIA                                                             /MDT 128
327  3161        DCA          IP                                                  /MDT 129
330     0  COM,  0                   /EXECUTE MOTOR COMMAND                       /MDT 130
331  2162        ISZ          PC     /INCREMENT PULSE COUNT                       /MDT 131
332  2157        ISZ          MK                                                  /MDT 132
333  7410        SKP                                                             /MDT 133
334  3147        DCA          MI     /MOTOR INDICATOR OFF                         /MDT 134
335  3135        DCA          K      /CLEAR TIMER                                 /MDT 135
336  6311  CLKE, 6311                /TURN OFF CLOCK FLAG                         /MDT 136
337  7200  EXIT, CLA                                                             /MDT 137
340  1154        TAD          SVLK                                                /MDT 138
341  7110        CLL    RAR                                                       /MDT 139
342  1165        TAD          SVAC                                                /MDT 140
343  6001        ION                 /ENABLE INTERRUPT                            /MDT 141
344  5401        JMP    I     I      /RETURN                                      /MDT 142
                                                                                  /MDT 143
345     0  STRR, 0                   /SUBROUTINE TO STORE IN ARRAY                /MDT 144
346  3136        DCA          TMP                                                 /MDT 145
347  1170        TAD          NSTM   /SEE IF STORAGE FILLED                       /MDT 146
350  7041        CIA                                                             /MDT 147
351  1156        TAD          NST                                                 /MDT 148
352  7650        SNA    CLA                                                       /MDT 149
353  5363        JMP          STRI   /JUMP IF STORAGE FILLED                      /MDT 150
354  2156        ISZ          NST    /INCREMENT NUMBER OF ENTRIES                 /MDT 151
355  1145        TAD          LSTI   /ADVANCE ADRESS IN STORAGE                   /MDT 152
356  1156        TAD          NST                                                 /MDT 153
357  3166        DCA          STN                                                 /MDT 154
360  1136        TAD          TMP    /STORE                                       /MDT 155
361  3566        DCA    I     STN                                                 /MDT 156
362  5745        JMP    I     STRR                                                /MDT 157
363  7240  STRI, CLA    CMA          /SET SENTINEL OF OVERRUN STORAGE             /MDT 158
364  3566        DCA    I     STN                                                 /MDT 159
```

```
365  5745        JMP   I     STRR                                  /MDT 160
                                                                   /MDT 161
            *400                                                   /MDT 162
400  6002        IOF                                               /MDT 163
401  6046        TLS                                               /MDT 164
402  1156        TAD         NST   /PRINT OUT STORAGE ARRAY        /MDT 165
403  7041        CIA                                               /MDT 166
404  3163        DCA         ARRK  /COUNTER FOR PRINT LOOP         /MDT 167
405  1144        TAD         LST   /SET ADDRESS                    /MDT 168
406  3164        DCA         STOR                                  /MDT 169
407  1233  CTL6, TAD         RET                                   /MDT 170
410  4307        JMS         PRNT                                  /MDT 171
411  1234        TAD         LFD                                   /MDT 172
412  4307        JMS         PRNT                                  /MDT 173
413  1564        TAD   I     STOR  /PUT ENTRY INTO AC              /MDT 174
414  4236        JMS         SBNC                                  /MDT 175
415  2164        ISZ         STOR  /ADVANCE ADDRESS                /MDT 176
416  2163        ISZ         ARRK  /TEST COUNTER                   /MDT 177
417  5221        JMP         .+2                                   /MDT 178
420  5226        JMP         DONE                                  /MDT 179
421  1564        TAD   I     STOR  /PUT ENTRY INTO AC              /MDT 180
422  4236        JMS         SBNC                                  /MDT 181
423  2164        ISZ         STOR  /ADVANCE ADDRESS                /MDT 182
424  2163        ISZ         ARRK  /TEST COUNTER                   /MDT 183
425  5207        JMP         CTL6                                  /MDT 184
426  1234  DONE, TAD         LFD   /EXTRA LINE FEED                /MDT 185
427  4307        JMS         PRNT                                  /MDT 186
430  6041        TSF                /WAIT FOR PRINTER FLAG         /MDT 187
431  5230        JMP         .-1                                   /MDT 188
432  5635        JMP   I     BEG                                   /MDT 189
433  7735  RET,  215-260                                           /MDT 190
434  7732  LFD,  212-260                                           /MDT 191
435   177  BEG,  177                                               /MDT 192
                                                                   /MDT 193
            /BINARY TO DECI AL CONVERSION AND TYPECUT              /MDT 194
            /SINGLE PRECISI N                                      /MDT 195
            /CALLING SEQUEN E      TAD BINARY WORD                 /MDT 196
            /                      JMS SBNC                        /MDT 197
            /                      RETURN                          /MDT 198
436     0   SBNC, 0                                                /MDT 199
437  7100        CLL                                               /MDT 200
440  7510        SPA                                               /MDT 201
441  7020        CML                                               /MDT 202
442  3301        DCA VAL                                           /MDT 203
443  3277        DCA BOX                                           /MDT 204
444  1302        TAD CNTR                                          /MDT 205
445  3300        DCA CNT                                           /MDT 206
446  1276        TAD ADDR                                          /MDT 207
447  3261        DCA XYZ+2                                         /MDT 208
450  1317        TAD PLUS                                          /MDT 209
451  7430        SZL                                               /MDT 210
452  1320        TAD MNS                                           /MDT 211
453  4307        JMS PRNT                                          /MDT 212
454  1301        TAD VAL                                           /MDT 213
455  7510        SPA                                               /MDT 214
456  7041        CMA IAC                                           /MDT 215
457  3301  XYZ,  DCA VAL                                           /MDT 216
460  1301        TAD VAL                                           /MDT 217
461  1303        TAD CON                                           /MDT 218
462  7500        SMA                                               /MDT 219
463  2277        ISZ BOX                                           /MDT 220
464  7500        SMA                                               /MDT 221
465  5257        JMP XYZ                                           /MDT 222
466  7200        CLA                                               /MDT 223
467  1277        TAD BOX                                           /MDT 224
470  4307        JMS PRNT                                          /MDT 225
471  3277        DCA BOX                                           /MDT 226
472  2261        ISZ XYZ+2                                         /MDT 227
473  2300        ISZ CNT                                           /MDT 228
474  5260        JMP XYZ+1                                         /MDT 229
475  5636        JMP I SBNC                                        /MDT 230
476  1303  ADDR, TAD CON                                           /MDT 231
477     0  BOX,  0                                                 /MDT 232
500     0  CNT,  0                                                 /MDT 233
501     0  VAL,  0                                                 /MDT 234
502  7774  CNTR, 7774                                              /MDT 235
503  6030  CON,  6030                                              /MDT 236
504  7634        7634                                              /MDT 237
505  7766        7766                                              /MDT 238
506  7777        7777                                              /MDT 239
507     0  PRNT, 0                                                 /MDT 240
```

```
510  1316        TAD TWO                                                  /MDT 241
511  6041        TSF                                                      /MDT 242
512  5311        JMP .-1                                                  /MDT 243
513  6046        TLS                                                      /MDT 244
514  7300        CLA CLL                                                  /MDT 245
515  5707        JMP I PRNT                                               /MDT 246
516   260  TWO,  0260                                                     /MDT 247
517  7760  PLUS, 7760                                                     /MDT 248
520    15  MNS,  0015                                                     /MDT 249
                                                                          /MDT 250
           *600                                                           /MDT 251
600     5  MIT,  5                  /NUMBER OF ENTRIES                   /MDT 252
601    20  IPT,  20                 /PULSE INTERVAL TABLE                /MDT 253
602     4        4                                                        /MDT 254
603     3        3                                                        /MDT 255
604     2        2                                                        /MDT 256
605     1        1                                                        /MDT 257
                                                                          /MDT 258
           *1000                                                          /MDT 259
1000    0  ST,   0                  /STORAGE TABLE                       /MDT 260


                                                                          /MDT 262
           /CHANGE TAPE TO BE LOADED ONLY WHEN USING PDP-8                /MDT 263
                                                                          /MDT 264
           K#135                                                          /MDT 265
           MOFF#253                                                       /MDT 266
                                                                          /MDT 267
           *1                                                             /MDT 268
   1  7000        NOP                 /INTERRUPT                         /MDT 269
                                                                          /MDT 270
           *344                                                           /MDT 271
344  5400        JMP I 0             /MODIFY RETURN FROM INTERRUPT        /MDT 272
                                                                          /MDT 273
           *251                                                           /MDT 274
251  5652        JMP I APAT          /JUMP OUT TO PATCH                   /MDT 275
252   521  APAT, PAT                                                      /MDT 276
                                                                          /MDT 277
           *521                                                           /MDT 278
521  1331  PAT,  TAD CONK            /PATCH TO SLOW DOWN TIMING LOOP      /MDT 279
522  3332        DCA SPK                                                  /MDT 280
523  2332        ISZ SPK             /DELAY LOOP                          /MDT 281
524  5323        JMP .-1                                                  /MDT 282
525  2135        ISZ K               /INCREMENT TIMING LOOP               /MDT 283
526  5321        JMP PAT                                                  /MDT 284
527  5730        JMP I AMOF          /LOOP RUNS OUT. JUMP BACK            /MDT 285
530   253  AMOF, MOFF                                                     /MDT 286
531  7773  CONK, -5                   /DELAY CONSTANT                     /MDT 287
532     0  SPK,  0                    /DELAY COUNTER                      /MDT 288
```

APPENDIX B

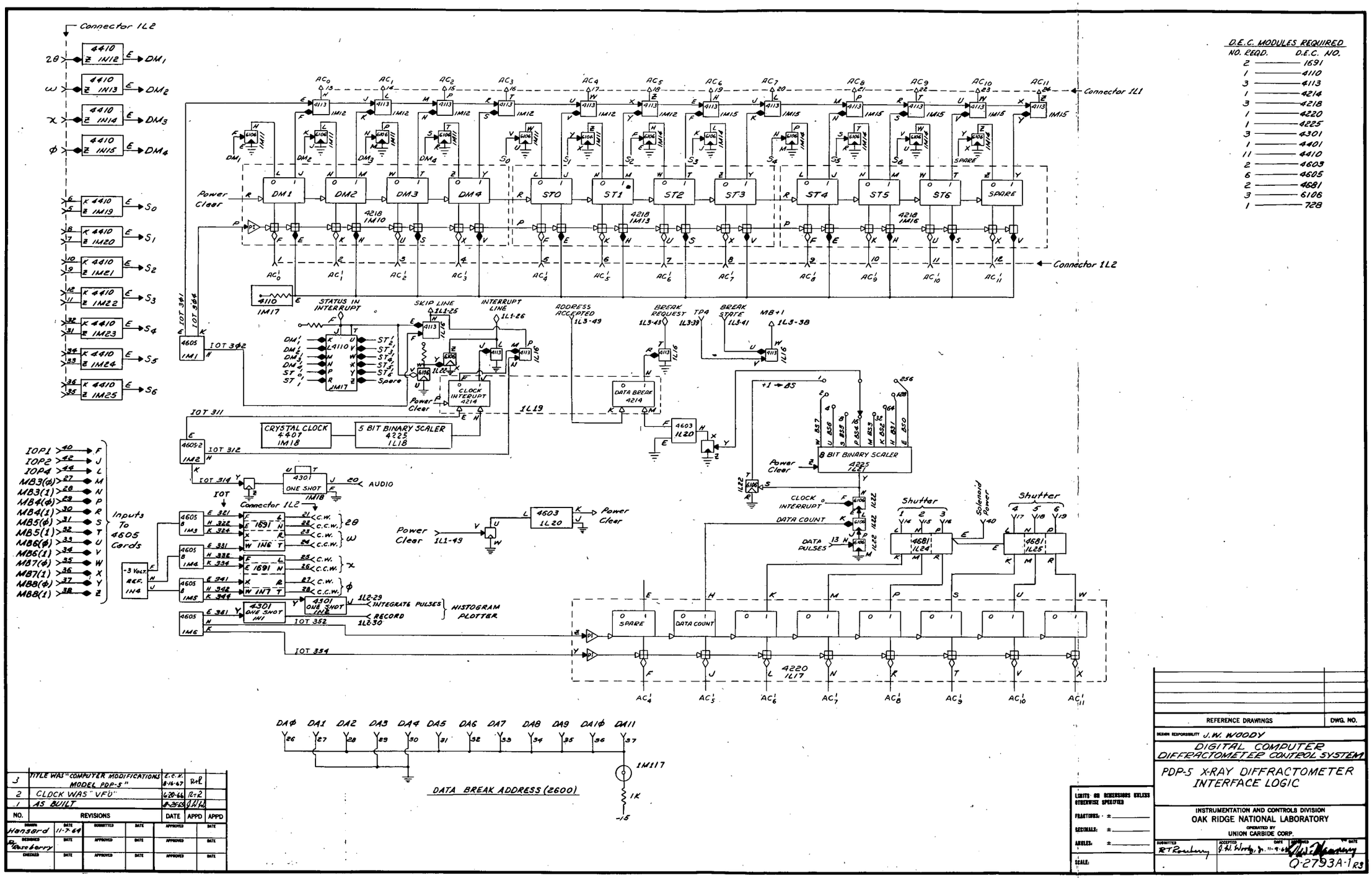

D.E.C. MODULES REQUIRED

NO. REQD.	D.E.C. NO.
2	1691
1	4110
3	4113
1	4214
3	4218
1	4220
1	4225
3	4301
1	4401
11	4410
2	4603
6	4605
2	4681
3	6106
1	728

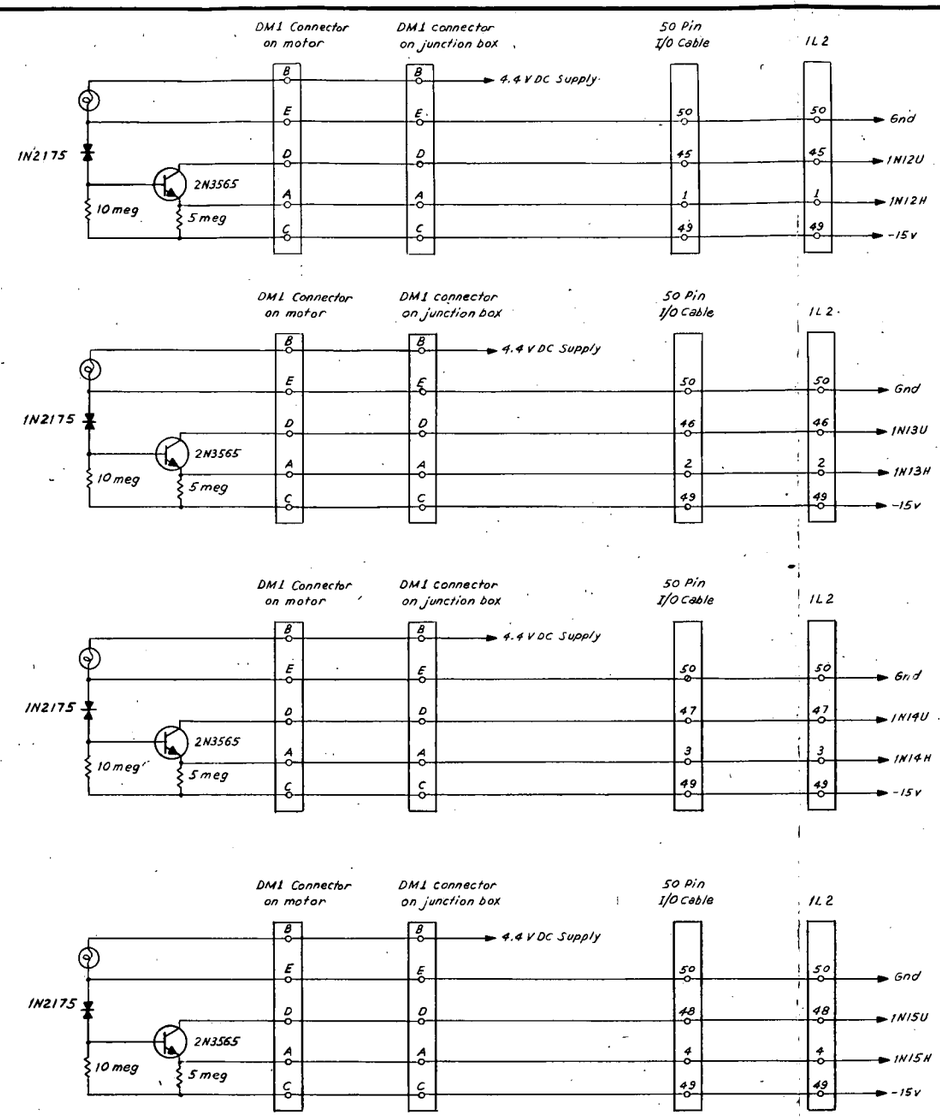

MODIFICATIONS TO 4410 LOGIC CARDS 1N12 1N13 1N14 1N15

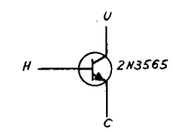

NO.	REVISIONS	DATE	BY	APPD

DRAWN G. H. Long DATE 9-19-67 DRAWING CHECK R T Roseberry
DESIGNED R T Roseberry DATE DESIGN CHECK

REFERENCE DRAWINGS	DWG. NO.

COORDINATOR R. T. Roseberry

DIGITAL COMPUTER DIFFRACTOMETER CONTROL SYSTEM

PDP-5 X-RAY DIFFRACTOMETER DETAILS

LIMITS ON DIMENSIONS UNLESS OTHERWISE SPECIFIED
FRACTIONS: ±
DECIMALS: ±
ANGLES: ±
SCALE:

INSTRUMENTATION AND CONTROLS DIVISION
OAK RIDGE NATIONAL LABORATORY
OPERATED BY UNION CARBIDE CORP.

APPROVED R T Roseberry PROJECT APPROVAL | ACCEPTED G. H. Worsley Jr. DATE 9-18-67 | APPROVED G. H. Morrison DATE

Q-2793A-3-R0

APPENDIX C

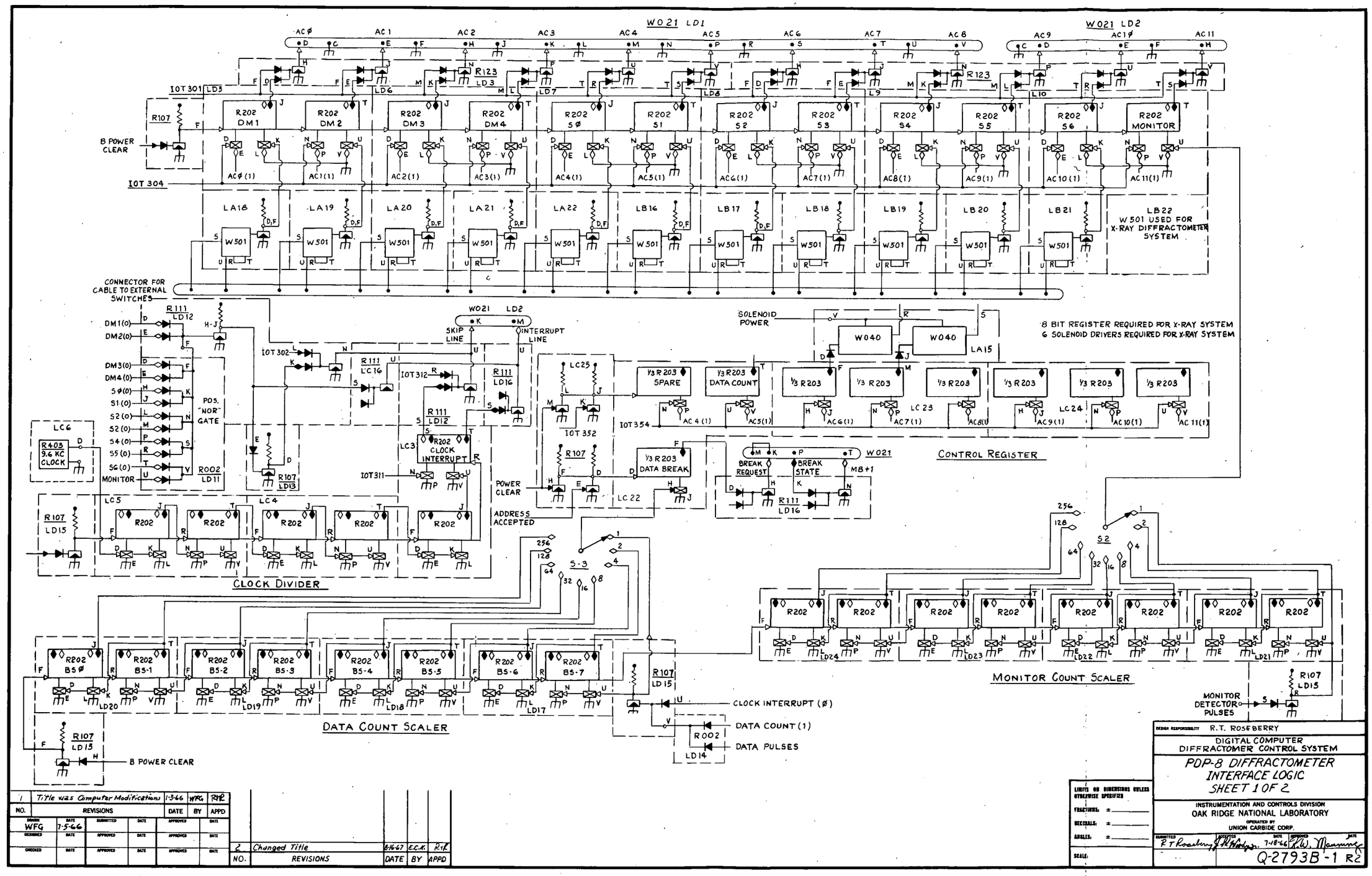
W021 LD1
W021 LD2
AC Ø
AC 1
AC 2
AC 3
AC 4
AC 5
AC 6
AC 7
AC 8
AC 9
AC 10
AC 11
IOT 301
IOT 304
B POWER CLEAR
R107
R202 DM1
R202 DM2
R202 DM3
R202 DM4
R202 SØ
R202 S1
R202 S2
R202 S3
R202 S4
R202 S5
R202 S6
R202 MONITOR
R123
LA18
LA19
LA20
LA21
LA22
LB16
LB17
LB18
LB19
LB20
LB21
LB22
W501
W501 USED FOR X-RAY DIFFRACTOMETER SYSTEM
CONNECTOR FOR CABLE TO EXTERNAL SWITCHES
DM1(0)
DM2(0)
DM3(0)
DM4(0)
SØ(0)
S1(0)
S2(0)
S4(0)
S5(0)
S6(0)
MONITOR
R111 LD12
R002 LD11
POS. "NOR" GATE
LC6
R405 9.6 KC CLOCK
R107 LD13
IOT 302
R111 LC16
IOT 312
R111 LD16
R111 LD12
SKIP LINE
INTERRUPT LINE
LC3
R202 CLOCK INTERRUPT
IOT 311
LC25
IOT 352
POWER CLEAR
ADDRESS ACCEPTED
LC22
SOLENOID POWER
W040
LA15
8 BIT REGISTER REQUIRED FOR X-RAY SYSTEM
6 SOLENOID DRIVERS REQUIRED FOR X-RAY SYSTEM
1/3 R203 SPARE
1/3 R203 DATA COUNT
1/3 R203
LC 23
LC 24
IOT 354
AC 4 (1)
AC 5 (1)
AC 6 (1)
AC 7 (1)
AC 8 (1)
AC 9 (1)
AC 10 (1)
AC 11 (1)
1/3 R203 DATA BREAK
BREAK REQUEST
BREAK STATE
MB+1
R111 LD16
CONTROL REGISTER
LC5
LC4
R107 LD15
CLOCK DIVIDER
256
128
64
32
16
8
S-3
S2
B5Ø
B5-1
B5-2
B5-3
B5-4
B5-5
B5-6
B5-7
LD20
LD19
LD18
LD17
LD24
LD23
LD22
LD21
DATA COUNT SCALER
MONITOR COUNT SCALER
CLOCK INTERRUPT (Ø)
DATA COUNT (1)
DATA PULSES
R002 LD14
B POWER CLEAR
MONITOR DETECTOR PULSES
DESIGN RESPONSIBILITY R.T. ROSEBERRY
DIGITAL COMPUTER DIFFRACTOMER CONTROL SYSTEM
PDP-8 DIFFRACTOMETER INTERFACE LOGIC SHEET 1 OF 2
INSTRUMENTATION AND CONTROLS DIVISION
OAK RIDGE NATIONAL LABORATORY
OPERATED BY UNION CARBIDE CORP.
Q-2793B-1 R2
1 Title was Computer Modifications 1-3-66 WFG RTR
NO. REVISIONS DATE BY APPD
DRAWN WFG 7-5-66
2 Changed Title 8-16-67 E.C.M. RTR
NO. REVISIONS DATE BY APPD
LIMITS OR DIMENSIONS UNLESS OTHERWISE SPECIFIED
FRACTIONS: ±
DECIMALS: ±
ANGLES: ±
SCALE:

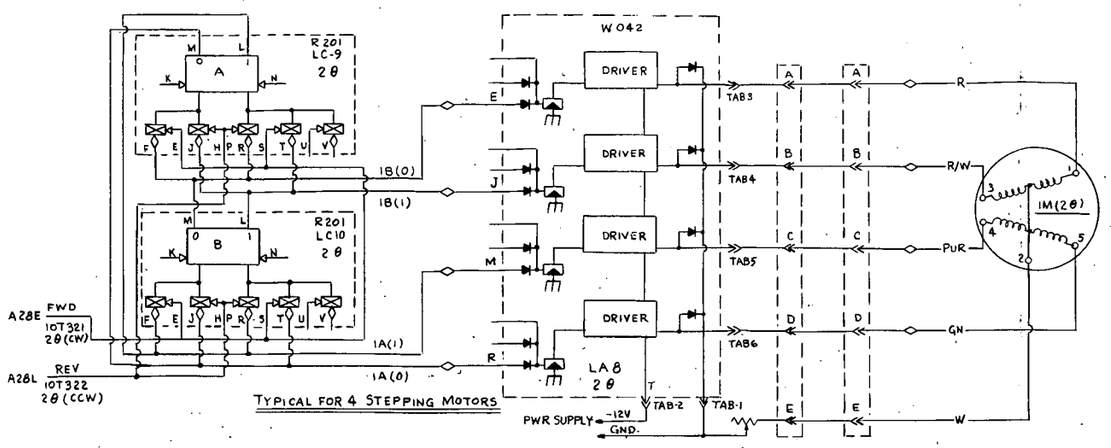

TYPICAL FOR 4 STEPPING MOTORS

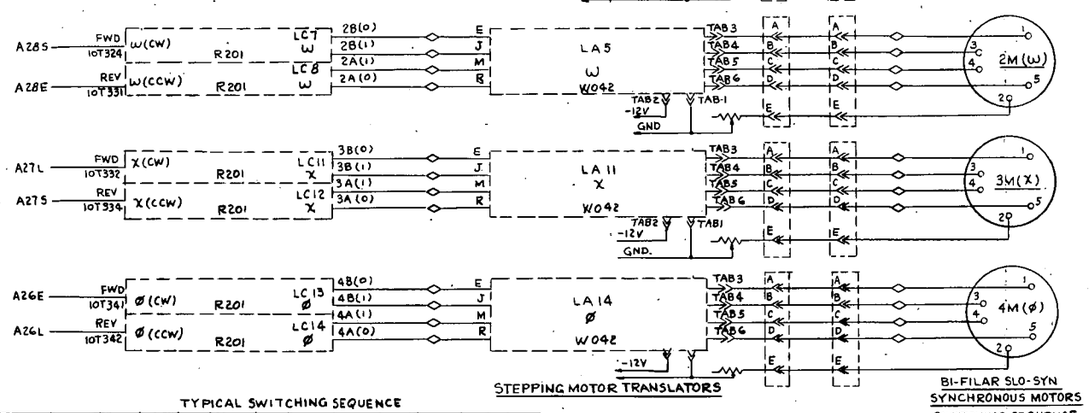

STEPPING MOTOR TRANSLATORS

TYPICAL SWITCHING SEQUENCE

10T341 PULSES	4B(0)	10TP1	4M1	4B1	10TP2	4M3	4A(1)	10TP3	4M4	4A(0)	10TP4	4M5
1	-3	-12.	-12	GND	GND	GND	GND	GND	GND	-3	-12	-12
2	-3	-12	-12	GND	GND	GND	-3	-12	-12	GND	GND	GND
3	GND	GND	GND	-3	-12	-12	-3	-12	-12	GND	GND	GND
4	GND	GND	GND	-3	-12	-12	GND	GND	GND	-3	-12	-12
5	-3	-12	-12	GND	GND	GND	GND	GND	GND	-3	-12	-12

BI-FILAR SLO-SYN SYNCHRONOUS MOTORS

SWITCHING SEQUENCE

STEP	TERMINAL 1	3	4	5
1	-V	GND	GND	-V
2	-V	GND	-V	GND
3	GND	-V	-V	GND
4	GND	-V	GND	-V
5	-V	GND	GND	-V

TO REVERSE ROTATION, READ TABLE FROM BOTTOM TO TOP

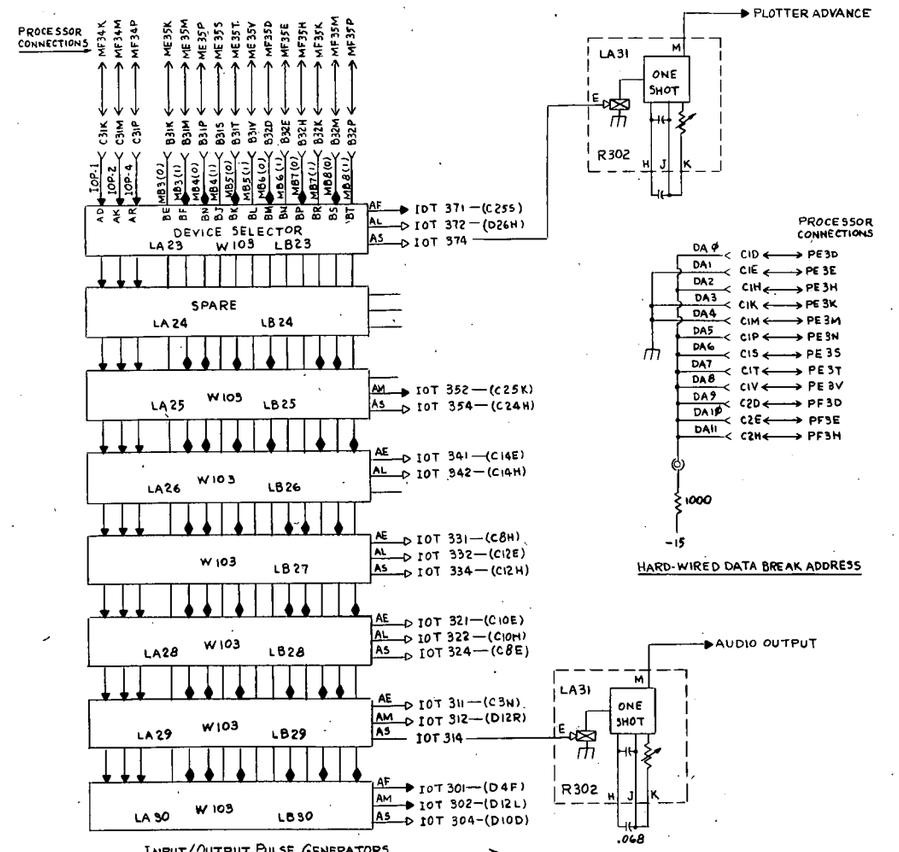

INPUT/OUTPUT PULSE GENERATORS

HARD-WIRED DATA BREAK ADDRESS

NOTE:
ALL INPUT DIODES REMOVED EXCEPT WHERE SYMBOL (◆) IS SHOWN AND ON SPARE UNIT 24

NOTES:
1- THE LOGIC SYMBOLS USED ARE UNIFORM SHAPES FROM "GRAPHIC SYMBOLS FOR LOGIC DIAGRAMS" ASA-Y32.14-1962.
2- AN ARROWHEAD (→ OR —▷) INDICATES A CAPACITIVE OR INDUCTIVE INPUT OR OUTPUT.
3- FLIP-FLOP OUTPUTS ARE SHOWN IN THE SET CONDITION.
4- ENGLISH TITLES ON LOGIC LINES APPLY TO THE NEAREST LEVEL INDICATOR.
5- THE MODULE TYPES REFER TO DIGITAL EQUIPMENT CORP. FLIP-FLOP MODULES, CAT. C-105. THE STANDARD SHADING FOR POLARITY IS: → = 0 VOLTS AND —▷ = -3 VOLTS.

D/A CONVERTER

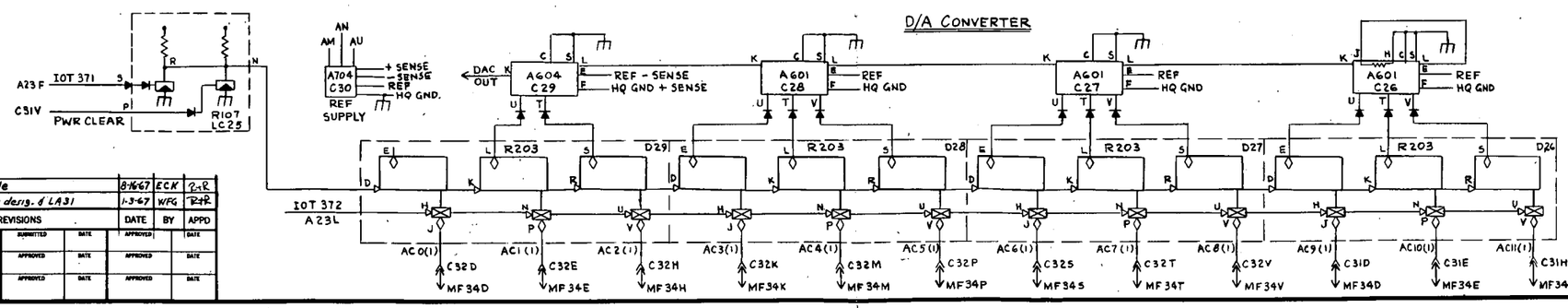

NO.	REVISIONS	DATE	BY	APPD
2	Changed Title	8-16-67	ECK	R.T.R.
1	Add module desig. of LA31	1-3-67	WFG	RTR

DRAWN W.F.G. DATE 8-30-66 SUBMITTED DATE APPROVED DATE
DESIGNED DATE APPROVED DATE APPROVED DATE
CHECKED DATE APPROVED DATE APPROVED DATE

REFERENCE DRAWINGS	DWG. NO.

DESIGN RESPONSIBILITY R. T. Rosaberry

DIGITAL COMPUTER DIFFRACTOMETER CONTROL SYSTEM

PDP-8 DIFFRACTOMETER INTERFACE LOGIC SHEET 2 OF 2

INSTRUMENTATION AND CONTROLS DIVISION
OAK RIDGE NATIONAL LABORATORY
OPERATED BY
UNION CARBIDE CORP.

SUBMITTED R. T. Rosaberry ACCEPTED J. W. Woody DATE 9-1-66 APPROVED Leonard W. Hansen DATE

Q-2793B-2 R2

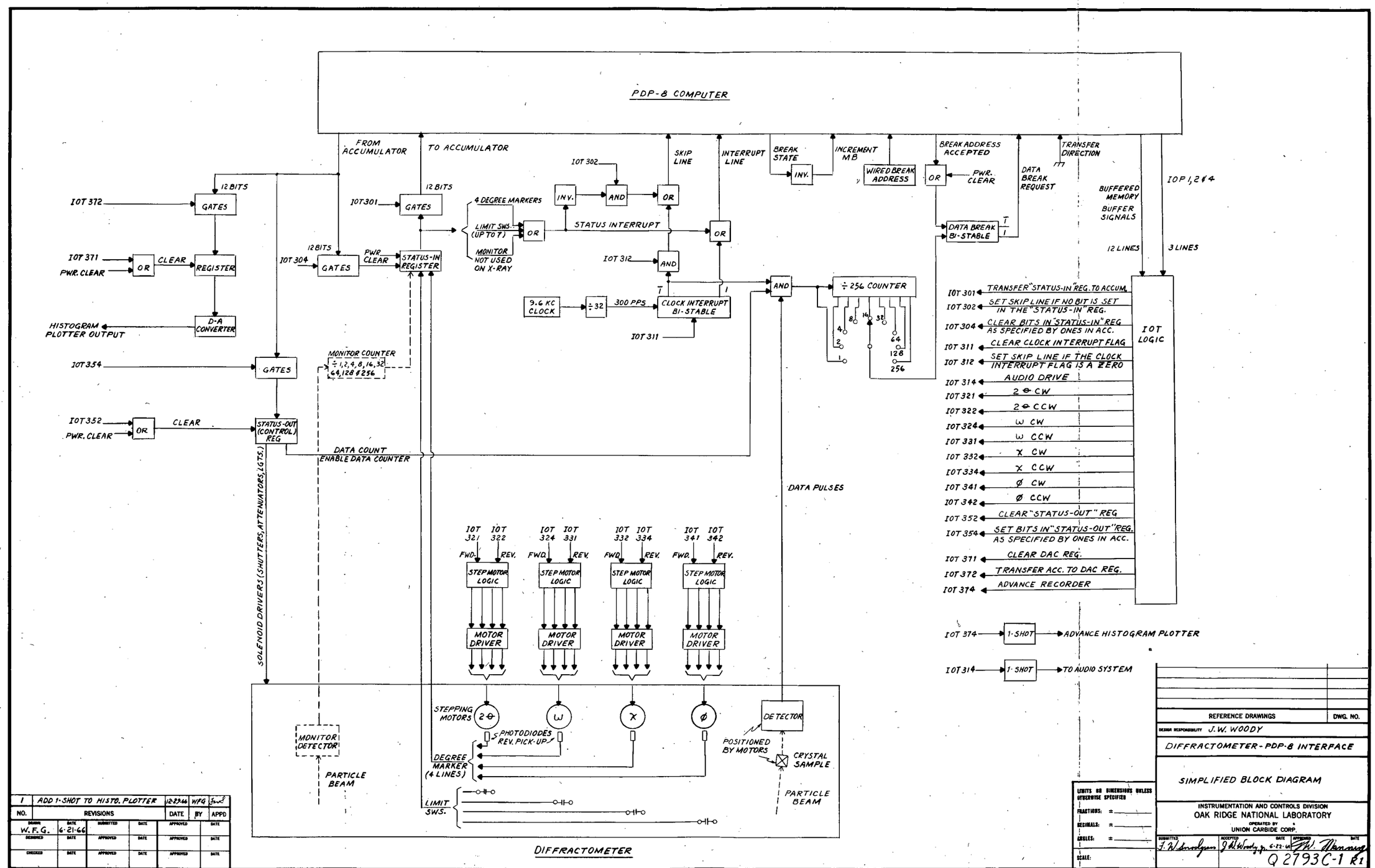

NO.	REVISIONS	DATE	BY	APPD
1	ADD 1-SHOT TO HISTO. PLOTTER	12-23-66	WFG	

DRAWN	DATE	SUBMITTED	DATE	APPROVED	DATE
W.F.G.	6-21-66				
DESIGNED	DATE	APPROVED	DATE	APPROVED	DATE
CHECKED	DATE	APPROVED	DATE	APPROVED	DATE

REFERENCE DRAWINGS | DWG. NO.

DESIGN RESPONSIBILITY J. W. WOODY

DIFFRACTOMETER - PDP-8 INTERFACE

SIMPLIFIED BLOCK DIAGRAM

LIMITS ON DIMENSIONS UNLESS OTHERWISE SPECIFIED
FRACTIONS: ±
DECIMALS: ±
ANGLES: ±
SCALE:

INSTRUMENTATION AND CONTROLS DIVISION
OAK RIDGE NATIONAL LABORATORY
OPERATED BY
UNION CARBIDE CORP.

SUBMITTED J. W. Woodyard | ACCEPTED J. W. Woody, Jr. 6-22-66 | APPROVED J. W. Manning | DATE

Q 2793C-1 R1

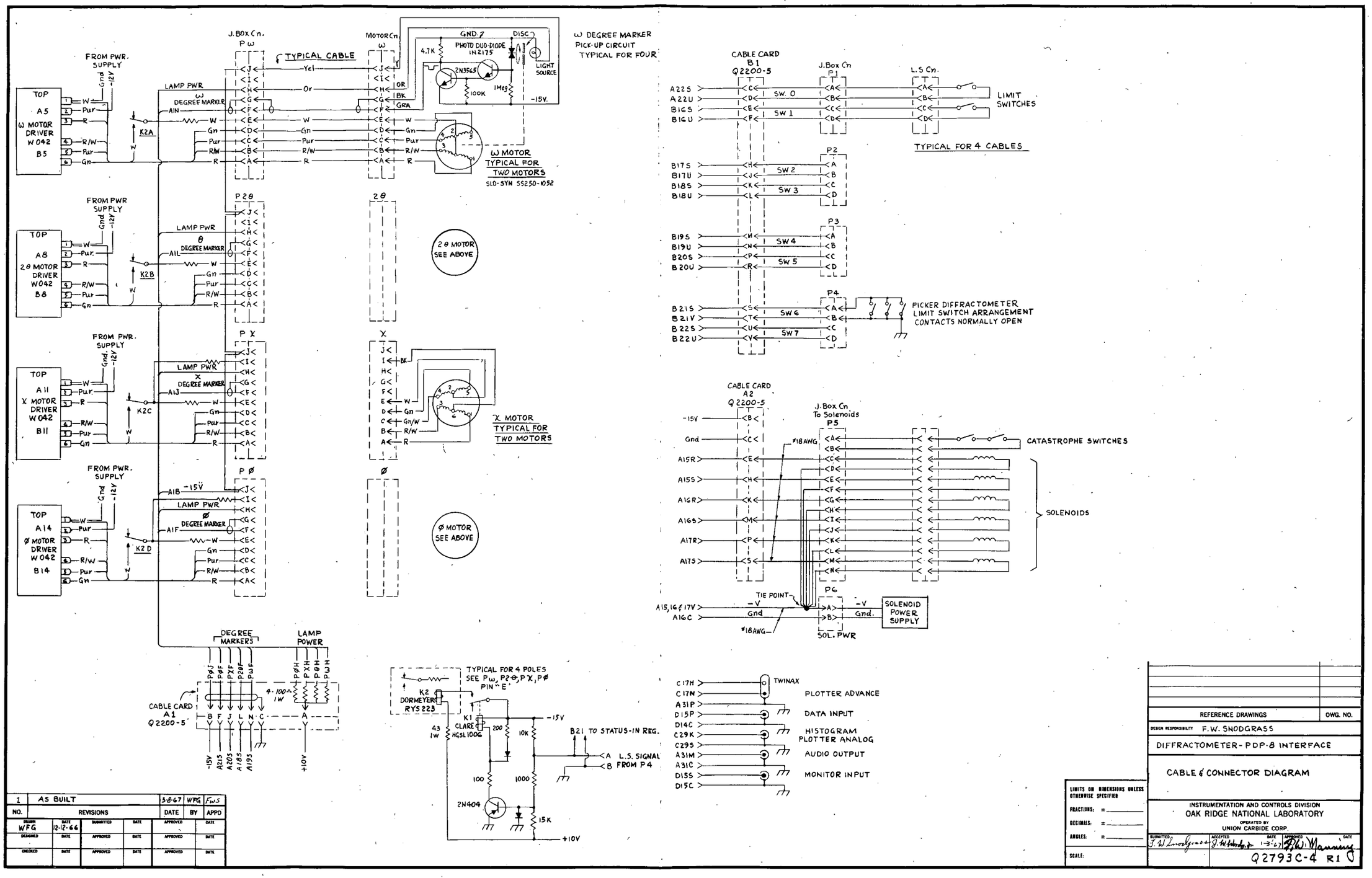

1	AS BUILT			5-8-67	WFG	F.W.S
NO.	REVISIONS			DATE	BY	APPD

DRAWN WFG	DATE 12-12-66	SUBMITTED	DATE	APPROVED	DATE
DESIGNED	DATE	APPROVED	DATE	APPROVED	DATE
CHECKED	DATE	APPROVED	DATE	APPROVED	DATE

REFERENCE DRAWINGS	OWG. NO.
DESIGN RESPONSIBILITY F.W. SNODGRASS	

DIFFRACTOMETER-PDP-8 INTERFACE

CABLE & CONNECTOR DIAGRAM

LIMITS ON DIMENSIONS UNLESS OTHERWISE SPECIFIED
FRACTIONS: ±
DECIMALS: ±
ANGLES: ±
SCALE:

INSTRUMENTATION AND CONTROLS DIVISION
OAK RIDGE NATIONAL LABORATORY
OPERATED BY UNION CARBIDE CORP.

SUBMITTED F.W. Snodgrass | ACCEPTED J.W. Hobday Jr. | DATE 1-3-67 | APPROVED F.W. Manning | DATE

Q2793C-4 R1

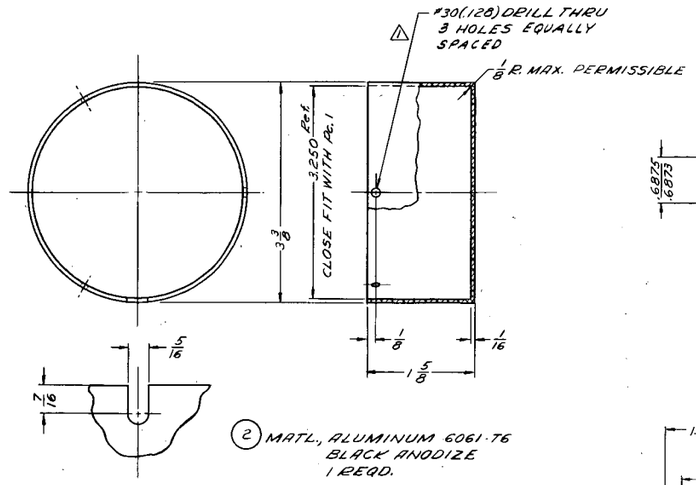

(2) MATL., ALUMINUM 6061-T6
BLACK ANODIZE
1 REQD.

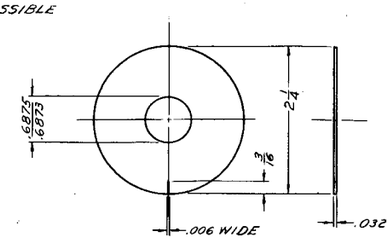

(3) MATL., ALUMINUM 5052-H32
BLACK ANODIZE
1 REQD.

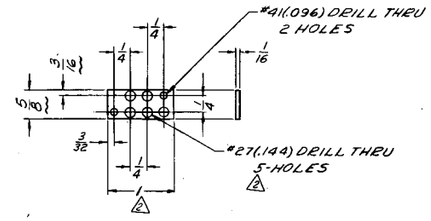

(5) MATL., LAMINATED PHENOLIC
(FABRIC BASE)
1 REQD.

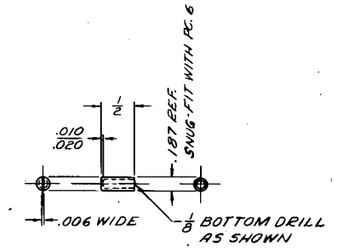

(7) MATL., ALUMINUM 6061-T6
BLACK ANODIZE
1 REQD.

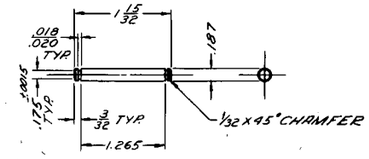

(8) MATL., CARBON STEEL, DRILL ROD
1 REQD.

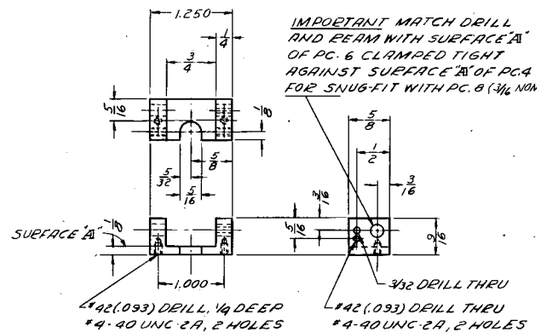

(4) MATL., ALUMINUM 6061-T6
BLACK ANODIZE
1 REQD.

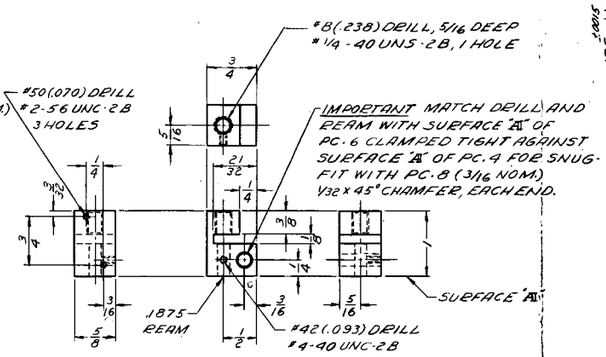

(6) MATL., ALUMINUM 6061-T6
BLACK ANODIZE
1 REQD.

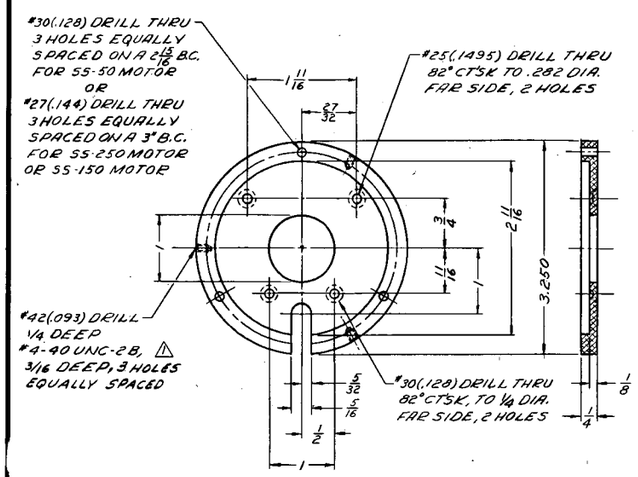

(1) MATL., ALUMINUM 6061-T6
BLACK ANODIZE
1 REQD.

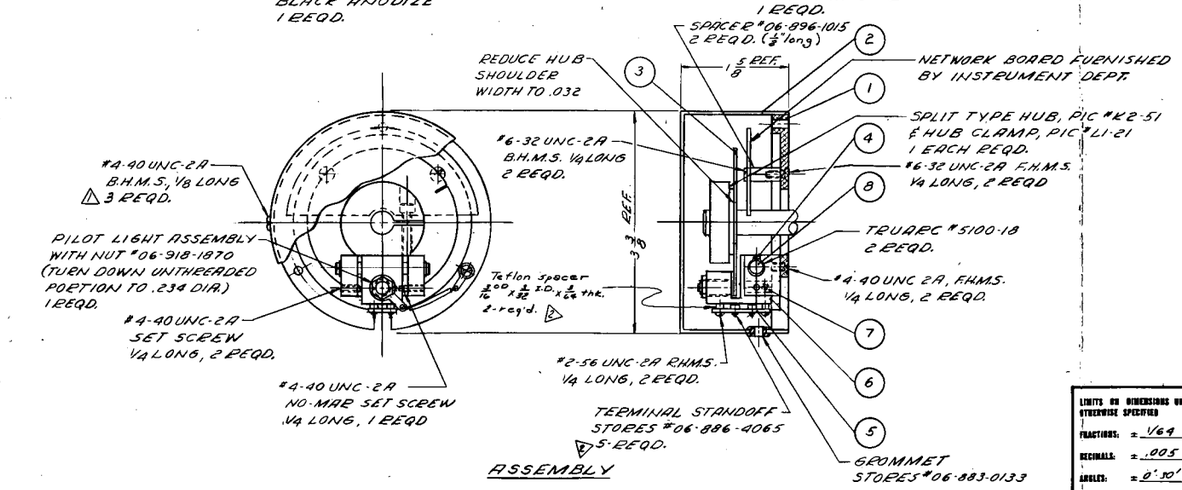

ASSEMBLY

NOTES:

1. THIS MECHANISM IS DESIGNED FOR INSTALLATION ON SUPERIOR ELECTRIC SLO-SYN MOTOR NUMBERS SS 50, SS150 OR SS250 WITH DOUBLE END SHAFT EXTENSIONS. THE BOLT CIRCLE FOR THE MOUNTING SCREWS IN PC. 1 IS THE ONLY DIMENSION THAT MUST CHANGE

NO.	REVISIONS	DATE	BY	APPD
2	Spacer added & Dwg. 5 modified	4-13-67	R.P.	GWA
1	WAS 2 REQ'D, WAS SLO-SYN	4-19-67	R.P.	GWA

DRAWN Hansard	DATE 5-11-66	SUBMITTED	DATE	APPROVED	DATE
DESIGNED G.W. Allin	DATE	APPROVED	DATE	APPROVED	DATE
CHECKED GWA	DATE 5/10/66	APPROVED	DATE	APPROVED	DATE

REFERENCE DRAWINGS	DWG. NO.

DESIGN RESPONSIBILITY G.W. ALLIN

COMPUTER CONTROL SUPPORT

SS-50, 150, 250 MOTOR DRIVER
DEGREE MARKER MECHANISM
DETAILS & ASSEMBLY

INSTRUMENTATION AND CONTROLS DIVISION
OAK RIDGE NATIONAL LABORATORY
OPERATED BY
UNION CARBIDE CORP.

LIMITS ON DIMENSIONS UNLESS OTHERWISE SPECIFIED
FRACTIONS: ± 1/64
DECIMALS: ± .005
ANGLES: ± 0° 30'
SCALE: FULL

SUBMITTED | ACCEPTED | DATE | APPROVED H. L. Hightower 5-66 | DATE

Q-2902-1 R2

ORNL-4143
UC-32 — Mathematics and Computers

INTERNAL DISTRIBUTION

1. Biology Library
2-4. Central Research Library
5-6. ORNL — Y-12 Technical Library
Document Reference Section
7-226. Laboratory Records Department
227. Laboratory Records, ORNL R.C.
228. C. E. Bemis, Jr.
229. D. S. Billington
230. G. M. Brown
231. George Brunton
232. W. R. Busing
233. J. W. Cable
234. J. W. Curlin
235. M. D. Danford
236. H. W. Dunn
237. R. D. Ellison
238. T. G. Godfrey
239. R. L. Hahn
240. R. W. Hendricks
241. D. M. Hewette
242. G. A. Holt
243. L. D. Hulett
244. H. W. Joy
245. S. P. King
246. C. Koch
247. W. C. Koehler
248. C. E. Larson
249. W. W. Lee
250. J. M. Leitnaker
251. H. A. Levy
252. T. Lindemer
253. H. G. MacPherson
254. J. C. Ogle
255. G. D. O'Kelley
256. R. T. Roseberry
257. D. R. Sears
258. O. Sisman
259. C. J. Sparks
260. D. A. Sundberg
261. E. H. Taylor
262. A. M. Weinberg
263. M. K. Wilkinson
264. R. O. Williams
265. H. L. Yakel
266. P. D. Bartlett (consultant)
267. G. Friedlander (consultant)
268. J. J. Katz (consultant)
269. F. A. Long (consultant)
270. J. E. Mayer (consultant)
271. G. Scatchard (consultant)
272. H. M. Sisler (consultant)

EXTERNAL DISTRIBUTION

273. J. A. Swartout, Union Carbide Corporation, New York, N.Y.
274. University and Laboratory Division, AEC, ORO
275-562. Given distribution as shown in TID-4500 under Mathematics and Computers category (25 copies — CFSTI)