OAK RIDGE NATIONAL LABORATORY LIBRARIES
3 4456 0549647 9

CENTRAL RESEARCH LIBRARY
DOCUMENT COLLECTION

OAK RIDGE NATIONAL LABORATORY
operated by
UNION CARBIDE CORPORATION
NUCLEAR DIVISION
for the
U.S. ATOMIC ENERGY COMMISSION

ORNL-TM-1638
Part 5
COPY NO. 69

DATE - January 30, 1968

NUCLEAR INSTRUMENT MODULE MAINTENANCE MANUAL

PART 5

DUAL OPERATIONAL AMPLIFIER, ORNL MODEL Q-2605

J. L. Anderson

ABSTRACT

The circuit, applications, maintenance procedures, and acceptance tests for a Dual Operational Amplifier, ORNL Model Q-2605, are described. The amplifier is a commercial design manufactured to ORNL Specification SP-232 by Electronic Associates, Inc., as EAI Model 6.720. The unit consists of two independent high-gain amplifier circuits packaged on an etched circuit board. The circuit is housed in a 1-unit module of the Modular Reactor Instrumentation series Q-2600. Each amplifier can be used in conjunction with appropriate networks to perform linear computations, such as summation, integration, and multiplication by a constant.

OAK RIDGE NATIONAL LABORATORY
CENTRAL RESEARCH LIBRARY
DOCUMENT COLLECTION
LIBRARY LOAN COPY
DO NOT TRANSFER TO ANOTHER PERSON
If you wish someone else to see this document, send in name with document and the library will arrange a loan.

NOTICE This document contains information of a preliminary nature and was prepared primarily for internal use at the Oak Ridge National Laboratory. It is subject to revision or correction and therefore does not represent a final report.

LEGAL NOTICE

This report was prepared as an account of Government sponsored work. Neither the United States, nor the Commission, nor any person acting on behalf of the Commission:

A. Makes any warranty or representation, expressed or implied, with respect to the accuracy, completeness, or usefulness of the information contained in this report, or that the use of any information, apparatus, method, or process disclosed in this report may not infringe privately owned rights; or

B. Assumes any liabilities with respect to the use of, or for damages resulting from the use of any information, apparatus, method, or process disclosed in this report.

As used in the above, "person acting on behalf of the Commission" includes any employee or contractor of the Commission, or employee of such contractor, to the extent that such employee or contractor of the Commission, or employee of such contractor prepares, disseminates, or provides access to, any information pursuant to his employment or contract with the Commission, or his employment with such contractor.

CONTENTS

	Page
1. DESCRIPTION	4
1.1 General	4
1.2 Construction	4
1.3 Application	4
1.4 Specifications	4
1.5 Applicable Drawings and Specifications	6
2. THEORY OF OPERATION	6
2.1 Basic Block Diagram	6
2.2 The DC Amplifier Section	8
2.3 The Stabilizer Section	10
3. OPERATING INSTRUCTIONS	13
3.1 Installation	13
3.2 Operating Controls	13
3.3 Connections	13
3.4 Operating Procedures	13
4. MAINTENANCE INSTRUCTIONS	16
4.1 General	16
4.2 Trouble Analysis	17
4.3 Chopper Maintenance	17
5. REPLACEABLE PARTS LIST	21
6. ACCEPTANCE TEST PROCEDURE	24
6.1 Test Equipment	24
6.2 Adjustment Procedure	24
6.3 Acceptance Test	25
6.4 Additional Specification Tests	27

1. DESCRIPTION

1.1 General

The Dual Operational Amplifier, ORNL Model Q-2605, is a commercial design manufactured to ORNL Instrumentation and Controls Division Specification SP-232, dated December 23, 1964. The original order was supplied by Electronic Associates, Inc., as their EAI Model 6.720. The unit consists of two independent high-gain amplifier circuits packaged on an etched circuit board. The circuit board is housed in a 1-unit module of the Modular Reactor Instrumentation series Q-2600. The amplifiers are transistorized and designed for optimum stability and frequency response. Each amplifier can be used in conjunction with appropriate networks to perform linear computations, such as summation, integration, and multiplication by a constant.

1.2 Construction

The Dual Operational Amplifier is constructed on a printed circuit board housed within a single module 1.40 in. wide, 4.72 in. high, and 11.90 in. deep. It is a standard "1-unit" plug-in module of the Modular Reactor Instrumentation series depicted on drawings Q-2600-1 through Q-2600-6.

1.3 Application

These amplifiers are intended for general use in any application requiring stable gain from dc up to 200 kHz. The basic amplifier is a very high gain, chopper-stablized type, and the transfer or gain characteristics are determined entirely by external input and feedback networks. The design is functionally stable with a wide variety of networks, including integration, differentiation, and many combinations of lead and lag, as well as stable wide-band gain.

1.4 Specifications

These specifications are abbreviated for application and maintenance information. For complete information, see ORNL Instrumentation and Controls Division Performance Specification SP-232, Dec. 23, 1964.

1. Output voltage range:	±10 v minimum at 20 ma load.
2. Output current:	20 ma minimum at ±10 v.
3. Open-Loop gain:	Greater than 5×10^6 at 0 Hz.
4. Frequency response:	Within ±3 db from 0 to 200 kHz when connected as a unity-gain inverter (10 kilohms input and feedback resistors) with a 20 mv p-p input signal.

5.	Dynamic amplitude error:	Less than 0.1% at 1 kHz, 20 mv p-p, unity gain.
6.	Phase shift:	Less than 0.1° at unity-gain, 100 to 1000 Hz.
7.	Output impedance:	Less than 0.01 ohm at unity gain, 100 Hz.
8.	Noise and ripple of output:	When connected as a unity-gain inverter with 10-kilohm input and feedback resistors: a. At dc to 300 kHz, less than 400 μv p-p. b. At dc to 200 Hz, less than 80 μv p-p. c. Chopper spikes, less than 2 mv p-p.
9.	Summing junction offset:	Less than 20 μv at balance.
10.	Amplifier drift:	When connected as unity gain inverter: a. With 10-kilohm input and feedback resistors, less than ±5 μv/°C. b. With 100-kilohm input and feedback resistors, less than ±5 μv/°C. c. With 10-kilohm input and feedback resistors at constant temperature, less than 100 μv/24 hr. d. With 10-kilohm input and feedback resistors at constant temperature, less than 300 μv/month.
11.	Integrator drift:	With a grounded, 100-kilohm input resistor and a 10-μf feedback capacitor, less than 50 μv/sec.
12.	Balancing:	Self-contained, screwdriver adjustment. Null indication external.
13.	Stability:	Each amplifier shall be free of spurious oscillations a. With any value of feedback resistor from 0 to 5 megohms. b. With any input resistance from 500 ohms to open circuit. c. With any output capacitance loading from 0 to 0.1 μf. d. With any combination of summing junction and output capacitances less than 0.01 μf.
14.	Overload:	The amplifier shall not suffer damage when its output is shorted.
15.	Operating conditions:	10 to 55°C at 0 to 75% relative humidity.
16.	Power supply:	+25 v, +15 v, -15 v, regulated to 0.1%; and 6.3 v ac ± 10%, 60 Hz, sine wave.

OAK RIDGE NATIONAL LABORATORY LIBRARIES
3 4456 0549647 9

1.5 Applicable Drawings and Specifications

The following list gives the drawing numbers (ORNL Instrumentation and Controls Division drawing numbers), subtitles, and specification number for the Dual Operational Amplifier:

1. Q-2605-1	Circuit.
2. Q-2605-2	Assembly and Details.
3. Q-2605-3	Metalphoto Panel.
4. Q-2605-4	Parts List.
5. Q-2605-5	Assembly.
6. Q-2605-6	Test Jig.
7. SP-232	Performance Specification.

The following list gives the drawing numbers and subtitles for the Plug-in Chassis System:

1. Q-2600-1	Assembly.
2. Q-2600-2	Details.
3. Q-2600-3	Details.
4. Q-2600-4	Details.
5. Q-2600-5	Details.
6. Q-2600-6	Details.

2. THEORY OF OPERATION

2.1 Basic Block Diagram

The EAI Model 6.720 Dual Operational Amplifier, ORNL Model Q-2605, consists of an EAI Model 6.715 Dual DC Amplifier Card housed in a 1-unit module. The components for one channel are shown in block diagram form in Fig. 1. The major components consist of a stabilizer amplifier, a chopper, and a dc amplifier. The circuit is arranged so that the drift-free characteristics of an ac amplifier are used to maintain constant dc amplifier balance by providing a voltage to the input of the dc amplifier, which tends to maintain the summing junction at virtual ground. The resulting circuit has excellent long-term stability, and allows the use of a wide bandwidth dc amplifier without the necessity of frequent manual balancing.

Inputs to the amplifier are applied through an external input impedance Z_{in}. The dc and low-frequency components of the signal voltage at the summing junction (SJ) cannot pass directly to the input of the dc amplifier section because of C1. Instead, they are connected through R3 to contact 9 of chopper D1. [A chopper or synchronous vibrator consists of a coil-driven vibrating reed (8) that alternates between the contacts (9, 7) on each half-cycle of the coil excitation voltage.] The

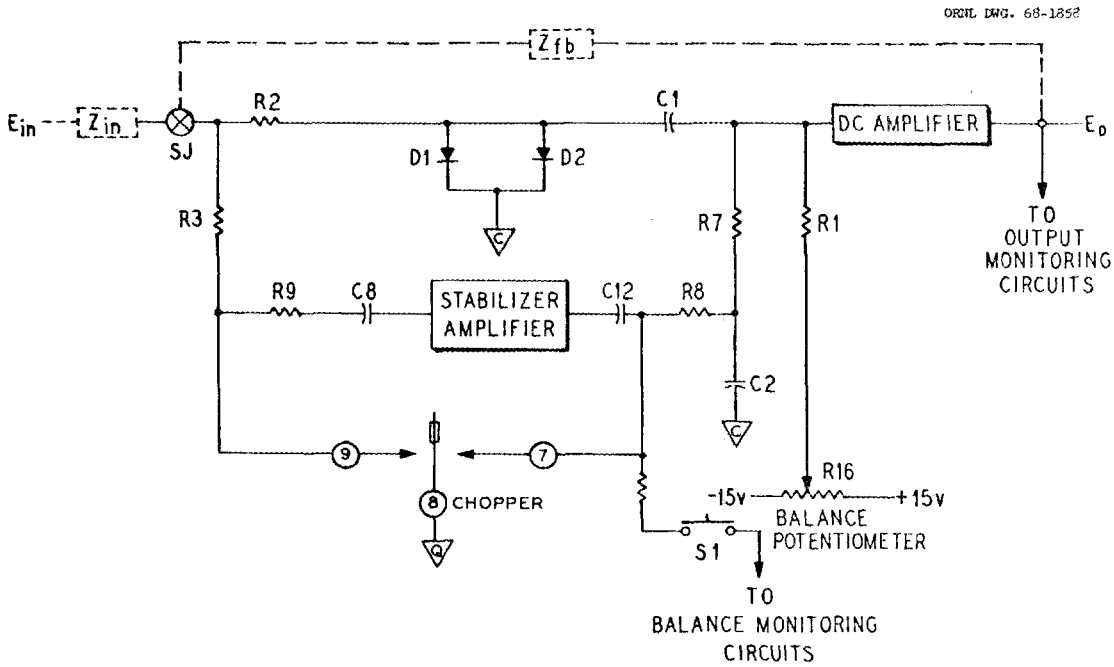

Fig. 1. One Channel of EAI Model 6.715 Dual DC Amplifier.

chopper alternately grounds contact 9, producing a 60-cps square-wave input to the stabilizer amplifier. After being amplified, the signal is demodulated (or synchronously rectified) at the second contact (7) of the chopper. The resulting signal at contact 7 is a pulsating dc signal whose polarity is the same as the polarity of the signal at the summing junction. The dc signal is filtered by R8 and C2 and applied through R7 to the input of the dc amplifier section. Thus, dc and very low frequency signals are amplified by the stabilizer amplifier and the dc amplifier.

The circuit from contact 9 of D1 to contact 7 is a modulated carrier-type amplifier that provides high-gain dc amplification with no drift. The stabilizer is phase sensitive; if the polarity of the summing junction signal changes, the phase of the modulated signal changes and the polarity of the pulsating dc output voltage changes.

High-frequency components of the input signal are passed through C1 to the dc amplifier, and are amplified by the gain of the dc amplifier only. The open-loop gain of the amplifier thus depends on the frequency of the input signal. At very low frequencies, the gain is extremely high, because the stabilizer amplifier is placed in series with the dc amplifier. At higher frequencies, the gain is decreased but remains high enough to satisfy all expected operations when the feedback loop is closed.

Any component of the amplifier output voltage due to drift in the dc amplifier section is fed back through the feedback impedance Z_{fG} to the summing junction of the amplifier. Since any drift-produced voltage has a very low frequency, it will be

amplified by the stabilizer section, filtered, and then applied as a drift-correction signal to the input of the dc amplifier section. The drift-produced component in the output is reduced by a factor equal to the effective gain of the stabilizer section. The amplifier would require balancing every few minutes without stabilization. The drift compensation produced by chopper stabilization allows the amplifier to be used for weeks without attention.

The amplifier in the stabilizer section has a very high gain. Since it is connected to the summing junction, it serves as a monitor of the summing junction voltage. Under normal circumstances, the input current of the operational amplifier is equal to the feedback current, and the summing junction is at virtual ground. If the currents are not equal, the amplifier is not performing properly, and the summing junction departs from virtual ground. This rise in voltage is amplified by the stabilizer and results in an output signal which may be connected through the appropriate pushbutton switch to the balance monitoring meter circuit.

2.2 The DC Amplifier Section

As shown in Fig. 2, the summing junction of the operational amplifier is connected to the input terminal. The dc components of the input signal are applied to the base of transistor Q1 through R2 and C1. The input signal is also connected through R3 to the input of the stabilizer section. Two reverse-connected diodes (CR1 and CR2) are connected from the input to ground so that C1 cannot be charged to a high voltage should an overload occur. This feature allows the amplifier to recover rapidly following an overload condition. The voltage at this point is normally less than the diode conduction point.

Transistors Q1 and Q2 comprise the amplifier input stage. Transistor Q2 is connected in a common-emitter configuration with R7 (in etched-circuit resistor network NW1) and thermistor R15, providing self-bias. Transistor Q1, connected in an emitter-follower configuration, uses the voltage drop (approximately 0.3 v) across the base-emitter diode of Q2 as its operating voltage. The emitter-base resistance of Q2 provides a load for Q1. This configuration gives the amplifier a relatively high input impedance. The base circuit of Q1 is completed through R8 (in NW1), R1, and the balance potentiometer. These components form a voltage divider between -15, +15, and +25 v. The balance potentiometer sets the optimum operating point for Q1, as indicated by a zero output from the stabilizer section.

The high frequency roll-off of the input stage is controlled by C3 and R5.

Temperature compensation is provided by thermistor R15 and resistor R6, which tend to keep the collector of Q2 at a constant potential regardless of temperature variations. The stabilizer output is connected through R8 and R7 to the input of Q1.

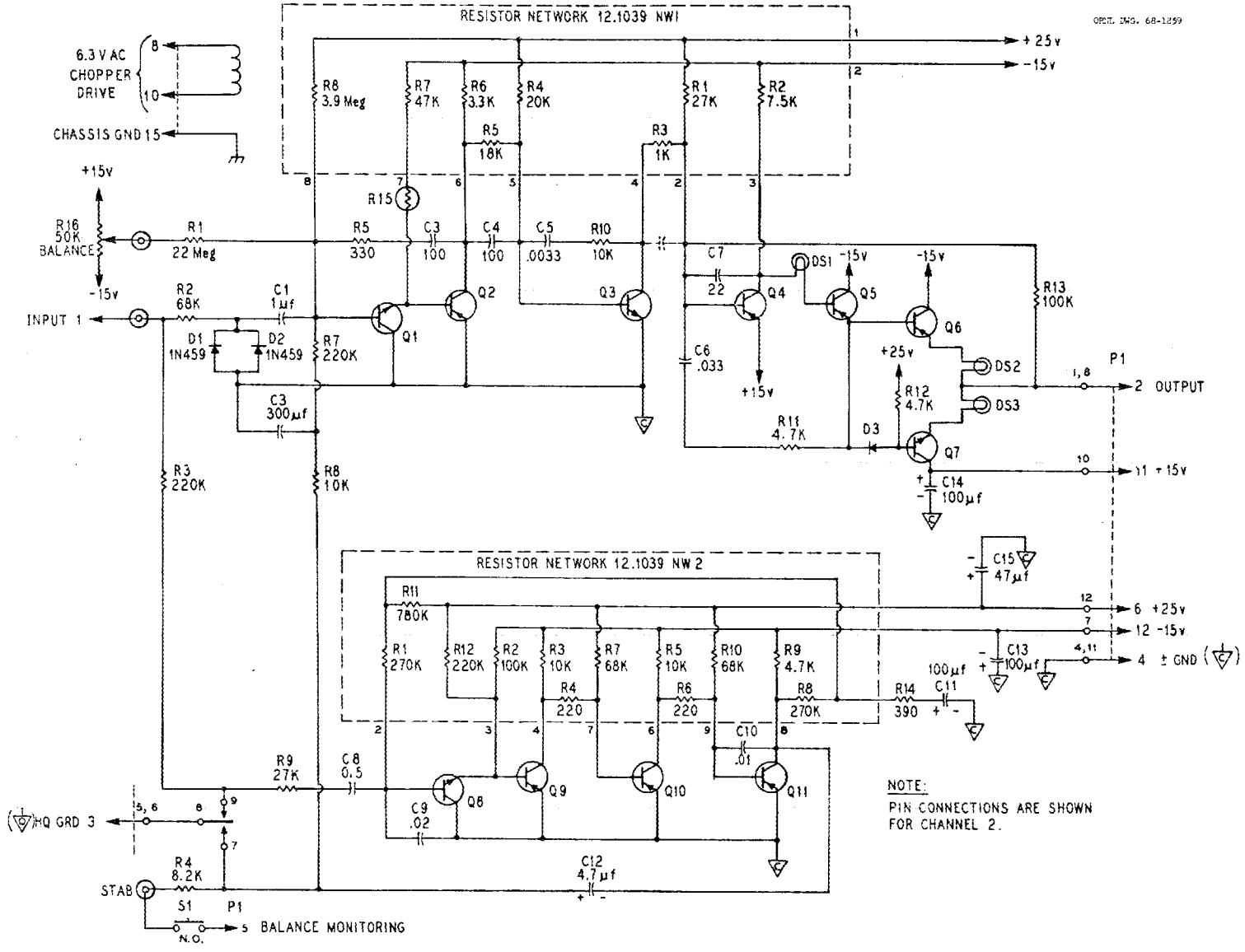

Fig. 2. Circuit of One Channel of EAI Model 6.715 Amplifier Card.

Capacitor C4 provides correct phasing for higher frequencies. The collector load for Q3 consists of resistors NW1-R3 and NW1-R1.

Resistor NW1-R3 provides direct coupling from the output of Q3 to the base of Q4, as well as forming a voltage divider with NW1-R1 to set the operating point for Q4. The Q4 stage is connected in the common-emitter configuration. The emitter is connected to +15 v, rather than to ground, to establish the correct operating points for Q4, Q5, Q6, and Q7. The collector load for the stage consists of NW1-R2. Capacitor C7 provides high-frequency degenerative feedback for this stage, and the network consisting of C6 and R11 controls the high-frequency roll-off for Q4 and Q5.

The collector of Q4 is connected to the base of Q5 through an incandescent lamp DS1. The filament of this lamp has a high, positive temperature coefficient of resistance, providing an increase in resistance with an increase in current flow. This stabilizes the operation of Q5 by limiting base drive. The Q5 stage is connected as an emitter-follower, with resistor R12 providing the emitter load resistor. Diode CR3 provides a small forward bias for output transistor Q7, eliminating cross-over distortion in the output stage.

The output stage consists of transistors Q6 and Q7, connected in a complementary-symmetry configuration. This circuit arrangement provides the advantages of push-pull operation with a single-ended input. Both transistors are connected as emitter-followers. Since transistor Q6 (PNP) conducts with a negative input and transistor Q7 (NPN) conducts with a positive input, one of the transistors delivers current to the load regardless of input polarity. With a zero input, both transistors conduct equally, and the voltage drop across the load is zero. Incandescent lamps DS2 and DS3 perform a function similar to that of DS1; by providing an increase in resistance with an increase in current, they protect the output transistors from excessive current flow. Resistor R13 provides a dc feedback to the base of Q4 which tends to keep the output of the amplifier at zero volts with a zero input and compensates for minor transistor and temperature variations.

2.3 The Stabilizer Section

The stabilizer section consists of a four-stage direct-coupled amplifier (Q8, Q9, Q10, and Q11), input and output coupling capacitors (C8 and C12 respectively), and a 60 cps chopper (D1). The stabilizer preamplifies the dc and very low frequency components of the signal appearing at the amplifier summing junction, and applies the resulting signal as an input to the dc amplifier section.

2.3.1 The Stabilizer Amplifier.

The stabilizer amplifier receives its input from the summing junction through resistors R3 and R9. The chopper grounds the junction of R3 and R9 60 times each

second, making the input appear as a series of pulses between ground and the input level. These pulses are coupled through C8 to the base of transistor Q8.

The input stage of the stabilizer consists of transistors Q8 and Q9. Transistor Q8 is connected as an emitter-follower, and uses the base emitter voltage drop of Q9 to provide operating voltage. The circuit arrangement of Q8 and Q9 is similar to the arrangement of Q1 and Q2 in the dc amplifier section, and provides a relatively high input impedance. Resistors NW2-R1 and NW2-R11 provide bias for Q8. Capacitor C9 filters high frequency transients from the input waveform. Resistor NW2-R2 provides the emitter load for Q8 and, together with NW2-R12, provides bias for Q9. Transistors Q9, Q10, and Q11 are connected in the common-emitter configuration, and are directly coupled through resistors NW2-R4 and NW2-R6. Capacitor C10 provides high-frequency degeneration for the Q11 stage, removing unwanted high-frequency components from the output waveform. Resistor NW2-R8 provides a feedback to the junction of NW2-R1 and NW2-R11, adjusting the bias on Q8 to maintain the stabilizer amplifier transistors at the correct operating point. The network consisting of R14 and C11 provides phase correction for very low frequencies, and filters high frequencies from the NW2-R8 feedback loop.

The stabilizer amplifier consists of an emitter-follower input stage, which is noninverting, and three common-emitter stages which provide an overall phase shift of 540°. This constitutes an apparent 180° phase shift, or an inversion from input to output. This cannot be tolerated by the overall amplifier, since the dc amplifier section provides a 180° phase shift. Any feedback under these conditions would be regenerative, and the amplifier would be unusable. For this reason, contacts 7 and 8 of the chopper demodulate the output of the stabilizer amplifier to provide a pulsed output to the filter network (R8 and C2) having the same polarity as the input. This is accomplished as described below.

2.3.2 The Chopper.

The chopper is a specially designed high-speed relay. It consists of a double-pole armature assembly which is driven by a 60-cps ac source and which alternates in position from one set of contacts to the other at this rate. Figure 1 shows how one pole of the chopper (pin 8) alternately grounds the stabilizer input (pin 9) and the stabilizer output (pin 7). The closing of contacts 8 and 9 at a 60-cycle rate causes the stabilizer input to appear as a series of pulses as described previously. This permits amplification of very low frequencies or dc levels while isolating the amplifier operating levels through the use of a coupling capacitor. The closing of contacts 8 and 7 effectively shifts the phase of the output by providing a short RC charge or discharge time for C12 when closed, and a longer time (through R8) when open. This operation is more easily understood with the use of examples.

If the input to the summing junction tends to go positive, the input to the stabilizer amplifier consists of a series of positive pulses. The output waveform at the

collector of Q11 then consists of a series of negative-going pulses. Note, however, that during the time that the input pulse is present (positive), the output (negative) at the junction of C12 and R8 is connected to ground through contacts 7 and 8 of the chopper. This allows C12 to charge rapidly to the level at the collector of Q11. The chopper arm then closes to contact 9, driving the stabilizer input to ground.

The collector of Q11 goes from its negative level toward ground at this time, and the positive change is coupled through C12 and R8 to the input of the dc amplifier. The dc restoring action of contact 7 and the arm of the chopper thus makes the apparent output a series of positive pulses which are filtered by C2 and R8 and provide a dc input to the dc amplifier through R7.

If the input to the summing junction tends to go negative, the stabilizer input is a series of negative pulses. The output at the collector of Q11 is a series of pulses from a negative level towards ground. In this case, the chopper provides a short time-constant discharge path for C12 when the collector of Q11 is close to ground. As contacts 8 and 9 of the chopper break and contacts 8 and 7 close, the collector of Q11 goes negative and the change is coupled through C12 and R8 to the filter capacitor C2.

2.3.3 The Stabilizer Filter

The stabilizer output filter, consisting of capacitor C2 and resistor R8, has a time constant of 3 sec. This is extremely long with respect to the stabilizer output waveform, consequently reducing the ripple at the junction of R8 and R7 to a negligible level.

2.3.4 Stabilizer Functions

The stabilizer performs the apparently dual functions of (a) preamplifying dc and very low frequency input signals, and (b) maintaining the amplifier summing junction at a point very close to ground potential over wide variations in amplifier balance. When the amplifier feedback loop is closed (as it must be), and no input is applied, the amplifier output should be zero volts. Any departure of the amplifier output from this point is coupled through the feedback resistor to the summing junction. This causes the stabilizer to generate a correction voltage that returns the amplifier output and consequently, the summing junction, to zero. If an input signal is applied to the summing junction, the stabilizer again generates a voltage. In this case, however, the output of the dc amplifier is shifted from ground potential, to produce an output with a polarity opposite to that of the input and a magnitude equal to the input voltage multiplied by the ratio of the feedback resistance to the input resistance. This output produces a potential at the summing junction equal in magnitude and opposite in polarity to the input signal, returning the absolute potential at the summing junction to a point very close to ground. It is in this way that the stabilizer attempts to keep the

summing junction at ground regardless of input voltage changes or variations within the dc amplifier.

3. OPERATING INSTRUCTIONS

3.1 Installation

The Dual Operational Amplifier, ORNL Model Q-2605, is a module in the ORNL Modular Reactor Instrumentation series. Like the other modules of the series, it has standard connectors and dimensions and has a pin- and hole-code on the rear plate so that the module will not be inserted in a wrong location in a drawer. The module is installed by placing it in its proper location, inserting the module firmly, and tightening the thumb screw. The module may be plugged in with power on without damage.

3.2 Operating Controls

A balance potentiometer and pushbutton for each section of the Dual Operational Amplifier are located on the top of the module, accessible when the drawer is pulled out. Depressing a pushbutton connects one of the amplifier stabilizer outputs to an external balance indicator, which is usually located in the top rear of the drawer. This arrangement permits the use of a single indicator for several amplifiers. At approximately monthly intervals the balance of each amplifier should be checked and adjusted if necessary by turning the balance potentiometer adjacent to the pushbutton depressed until the balance meter indicates zero.

3.3 Connections

All connections to the Dual Operational Amplifier are made through the rear connector P2 when the module is inserted.

3.4 Operating Procedures

The information in this section is general operating information which will help maintenance personnel to rapidly isolate amplifier troubles and eliminate causes of apparent faults which might be due to improper amplifier usage.

3.4.1 Amplifier Balancing

The amplifiers should be periodically balanced to ensure accuracy. Under normal circumstances, the amplifier will remain balanced for periods of weeks. However, at intervals, it is desirable to check this condition, and if an amplifier is found to be unbalanced, then an adjustment should be made. The period between balance checks depends to a large extent on the application of the amplifier. For uses which might be unusually sensitive to amplifier unbalance or integrator drift, the amplifier should be balanced more frequently. In any case, maintenance personnel should recognize that many amplifier and network malfunctions can be detected by checking the amplifier balance. Consequently, it is recommended that a check of the amplifier balance be made biweekly. If the check indicates that the amplifier balance is within tolerance, no adjustment need be made.

An amplifier is balanced as follows:

1. Connect a metering circuit equivalent to that shown in Figure 3a to the amplifier balance output terminal (pin 5 of the amplifier connector). A printed circuit unit for this purpose is designated Q-2631 in the Modular Reactor Instrumentation series.

2. Depress the pushbutton and rotate the balance potentiometer (see Fig. 1) for the appropriate amplifier until the minimum deflection is noted on the meter.

Initially, due to component aging, more frequent balancing of amplifiers may be required. Movement of the amplifier to different areas with extreme change in ambient conditions (or extreme change at the same location) may also necessitate balancing for optimum performance.

3.4.2 External Time Constants

To maintain the frequency and phase shift characteristics specified for the amplifier, the input and feedback networks must incorporate the correct time constant. This time constant is 4.7 μsec for the model 6.720 amplifier, and a small deviation from this value can cause significant phase errors at higher frequencies.

This characteristic is illustrated in Figure 3b, which illustrates a typical example of the amplifier used as an inverter.

The formula for time constant is:

$$\tau = RC.$$

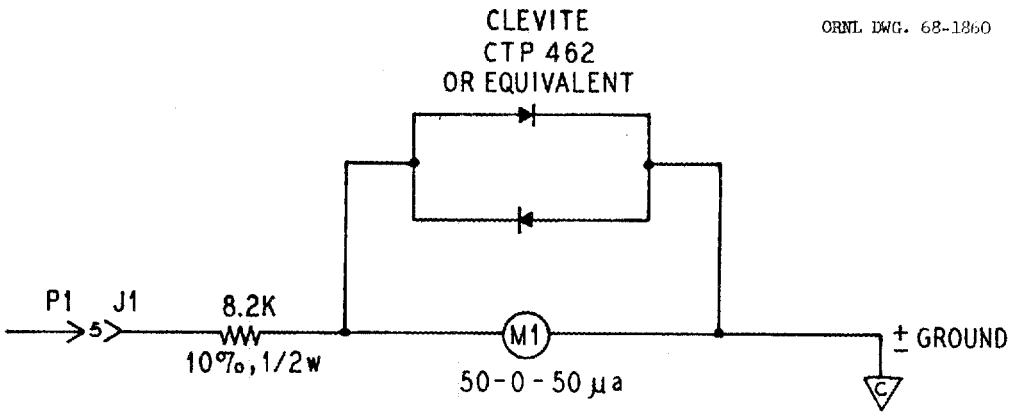

a. Amplifier balance monitoring circuit.

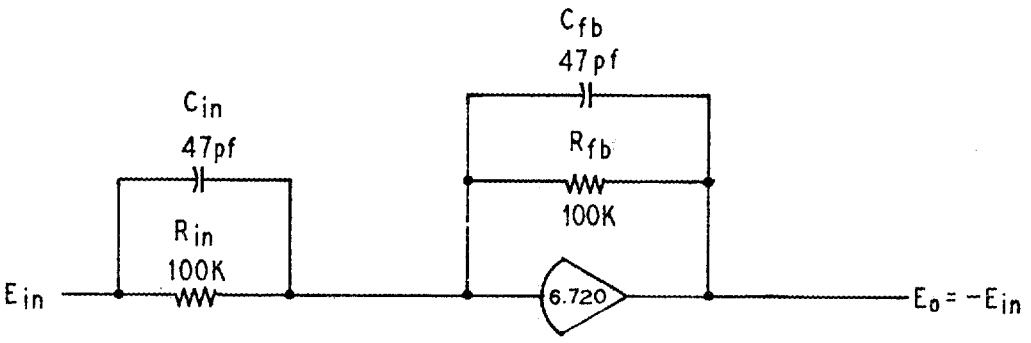

b. Typical inverter connection.

Fig. 3. Amplifier Balance Monitoring Circuit and Typical Inverter Connection.

Since the time constant is known (4.7 μsec), and R is a function of the gain desired from the amplifier, the capacitance C remains as the unknown:

$$C = \frac{\tau}{R}.$$

Since the value of R will normally be in the kilohm range and C will normally be in picofarads, the equation can be further simplified to

$$C = \frac{4700}{R},$$

where R is in kilohms and C is in picofarads.

As an example, an amplifier is connected to provide a gain of 5 with a 10-kilohm input resistor and a 50-kilohm feedback resistor. What value of capacitance should be placed in shunt with each resistor? For the input resistor

$$C = \frac{4700}{10} = 470 \text{ pf}.$$

For the feedback resistor:

$$C = \frac{4700}{50} = 94 \text{ pf}.$$

Even slight variations in the winding capacitance of wirewound resistors can cause considerable gain and phase errors, even at low frequencies (1 kc). Also, the positioning of wires associated with summing junction and output circuits might tend to influence frequency response. For this reason, it is desirable to make one of the capacitors variable in applications where amplifier frequency and phase shift characteristics are critical.

4. MAINTENANCE INSTRUCTIONS

4.1 General

The Dual Operational Amplifier module is designed to operate continuously with a minimum of maintenance and adjustment. The only adjustment required is periodic balancing as described in Sect. 3.2, "Operating Controls." No specific periodic maintenance is required.

4.2 Trouble Analysis

The amplifier is used with several different types of networks depending on the operation it must perform. Unsatisfactory performance by an operational amplifier could be due to a network malfunction. The malfunction can usually be isolated by interchanging suspected networks with ones that are known to be good. A faulty operational amplifier usually identifies itself immediately. If a component in the amplifier fails, the output voltage of the amplifier characteristically flops to its plus or minus limit (up to ±13 v, depending on the load).

4.2.1 Failure to Balance

The most common indication of unsatisfactory amplifier operation is failure to balance properly. If an amplifier will not balance, the malfunction can be traced to either the dc section or the stabilizer section with the following procedure:

1. Disable the stabilizer section by grounding the stabilizer output at pin 3 or 7 of the chopper (depending on which amplifier channel is malfunctioning).

2. Monitor the output voltage of the amplifier with an oscilloscope or voltmeter, and slowly rotate the balance potentiometer.

3. The amplifier output should flop between its plus and minus limits (about ±13 v) as the balance control is turned from one limit to the other. A slight delay in response is normal. If the amplifier fails to do this, the malfunction is probably in the dc section of the amplifier. If the correct indication is observed, the trouble is probably in the stabilizer section.

4.2.2 Trouble Analysis Symptoms and Possible Remedies

Table 1 is a list of symptoms that might be encountered during amplifier troubleshooting, and suggests remedies. These remedies are listed in order of probability, and it is suggested that the maintenance technician attempt component replacement in this order. Necessary or useful waveforms are shown in Fig. 4. The last column of Table 1 provides information for analyzing and localizing malfunctions.

4.3 Chopper Maintenance

Readjustment or burnishing of the chopper contacts may become necessary after about 2 years of service. Routine cleaning, burnishing, or adjustment is not recommended. Choppers should be serviced only if they give trouble. The contacts can be cleaned with ethyl alcohol or other solvents specified for contact cleaning.

ORNL DWG. 68-1861

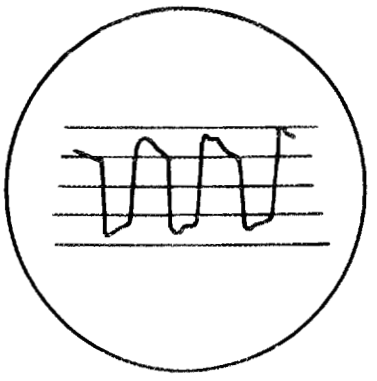

a. step 3

OR

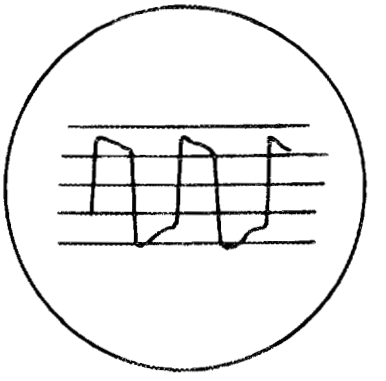

b. step 3

Sensitivity: 2 v/cm; sweep speed: 5 msec/cm

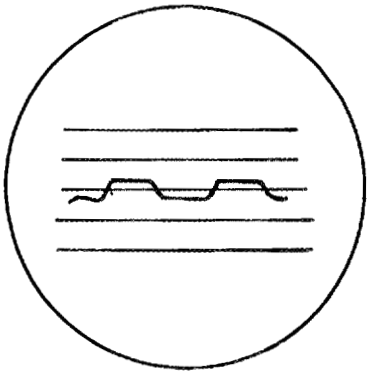

c. step 4

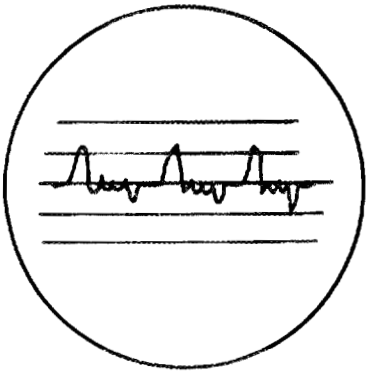

d. step 4

Sensitivity: 1 mv/cm; sweep speed: 5 msec/cm

e. step 7

Sensitivity: 1 mv/cm; sweep speed: 5 msec/cm

Fig. 4. Trouble Analysis Waveforms (Typical) Taken at Stabilizer Output, P1 Pin 5.

Table 1. Troubleshooting Information for Dual Operational Amplifier

STEP	TROUBLE	WAVEFORMS (see Fig. 4)	POSSIBLE CAUSES (In order of probability)	COMMENTS
1	High-Frequency noise	---	Q1; other dc amplifier transistors; CR3	High-frequency noise is a problem characteristically caused by a dc amplifier component failure.
2	Low-Frequency noise	---	Q8; Q9; Q10; Q11	Low-frequency noise is generally caused by a stabilizer amplifier component failure.
3	No balance, high stabilizer output	a or b	Feedback resistor not connected correctly; DS1, DS2, DS3 open; dc amplifier transistor Q1-Q5	These symptoms indicate that the stabilizer is unable to correct the summing junction error; check the feedback loop carefully, then the dc amplifier components.
4	No balance, no stabilizer output	c	Stabilizer transistors Q8-Q11	This problem is generally caused by a stabilizer amplifier component. Also examine the chopper and the stabilizer output filter.
		d	C8 open	
5	Excessive output current (DS1-DS3 illuminated)	---	Shorted transistors Q5, Q6, Q7; CR3 open; C12 open	This type of failure can cause related failures; check the output stage completely before returning the amplifier to service.
6	Offset	---	C12; CR1, CR2	Offset is caused most frequently by leakage through C12
7	Ringing on stabilizer output	e	C11	Ringing on stabilizer output may cause an apparent offset or impair low-frequency response; can be caused by a wide change in value or an open in C11.
8	1-kc gain is out of tolerance. 10 and 100 cycle gain in tolerance	---	Q1, Q2, Q3, R6	If the 1-kc gain is slightly out of tolerance, Q1 or Q2, or R6 are the most probable causes; if the gain at this frequency is considerably out of tolerance, C3 is the most probable cause.
9	10 and 100 cycle and 1 kc gain out of tolerance	---	Q3, C5, R10	Check all phasing networks carefully.
10	Jitter on balance meter	---	C1 open	---
11	Slow overload recovery	---	CR1 or CR2 open	Slow recovery from + (input) overload, CR1 faulty; slow recovery from - (input) overload, CR2 faulty.

Burnishing should be done only with bonafide contact burnishing tools or cloth, never with ordinary files or abrasive paper. After being cleaned or burnished, the contact adjustment should be checked and readjusted as necessary. Usually adjustment alone will be sufficient since the contacts are largely self cleaning.

4.3.1 Chopper Adjustment

A simple test jig (Fig. 5) is handy for checking and adjusting choppers. Slide the cover from the jig after removing the phillips-head screw in the top. Install the chopper in the test-jig socket, or substitute, and attach clip leads to the drive-coil terminals. Energize the coil with 6.3 v ac, 60 Hz. Connect an ohmmeter (Simpson 260 or Triplett 630, or equal) between one of the vibrating contacts (pin 2) and one of the fixed contacts (pin 1). Ignore the ohms scale and read one of the linear voltage scales on the multimeter. It should indicate 45% of full scale (for example, 135 v on a 300-v scale). This is a measure of the dwell time of the contact. If the dwell time is incorrect, adjust the fixed contact until the dwell is 45 ± 2%. Repeat for the other fixed contact (pin 3), and then recheck pin 1 because some interaction might occur. Repeat for the other set of contacts, pins 7, 8, and 9. An oscilloscope can be connected directly in parallel with the ohmmeter to look for contact bounce or poor commutation. In this way the ohmmeter supplies voltage for viewing on the oscilloscope.

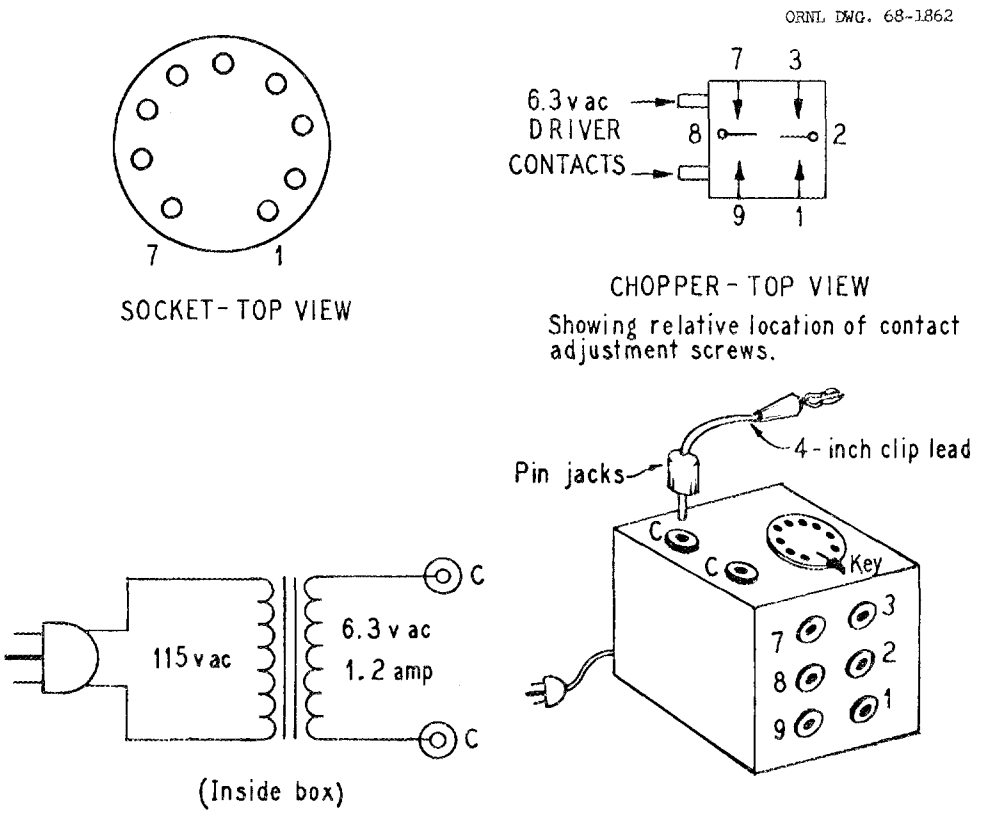

Fig. 5. Chopper Test Jig.

5. REPLACEABLE PARTS LIST

A brief description of each part for the Dual Operational Amplifier and a manufacturer's number are listed in Table 2. Where applicable, a reference symbol (schematic designation) is included.

The category column indicates the availability of each listed part so that a replacement part can be obtained as quickly as possible. The components in category A are standard electronic items that are usually available from any commercial electronic supplier. To expedite obtaining items of this nature, it is suggested that they be purchased from a local source whenever possible. These parts can also be ordered from EAI.

The components in category B can be obtained from EAI or any of the listed manufacturers. However, in most cases, EAI offers the most rapid service on these items.

The parts in category C are custom-made components and proprietary items that are available only from EAI. When ordering items of this type, please specify the type number and serial number of the basic unit in which the part is located, as well as the part identification.

Where possible, sufficient information is given for category C items to permit an electrically-similar replacement part to be obtained locally. Thus, if desired, a temporary repair may be made while the exact replacement is being obtained from EAI. However, EAI does not guarantee that the affected unit will operate within specifications when the specified category C part is not used.

Table 2. Replaceable Parts List

Part No.	Description	EAI No.	Category
S101, 201	Switch, push: momentary contact, SPST, normally open; Grayhill, Inc., type 30-1	Order by description	B
R109, 209	Resistor, variable composition: 50,000 ohms ± 30%; Chicago Telephone Supply Co., series 70, No. HH1860	642 351 0	B
C101, 201, 102, 202	Capacitor, fixed, ceramic: 100 pf ± 10%, 1000 wvdc; Cornell-Dubilier L10T1	515 019 0	B
C103, 203	Capacitor, fixed, plastic: 0.0033 μf ± 5%, 200 wvdc; Sprague 192P33252	521 170 0	B
C104, 204	Capacitor, fixed, plastic: 1 μf ± 5%, 25 wvdc; EAI	B521 166 1	C
C105, 205	Capacitor, fixed, electrolytic: 300 μf - 10% +100%, 3 wvdc; International Electronics	B516 260 0	B
C106, 206	Capacitor, fixed, plastic: 0.033 μf ± 20%, 200 wvdc; Sprague 192P33392	521 181 1	B
C107, 207	Capacitor, fixed, ceramic: 22 pf ± 10%, 1000 wvdc; Cornell-Dubilier C10Q22C	515 096 0	B
C108, 208	Capacitor, fixed, plastic: 0.5 μf ± 5%, 25 wvdc; EAI	B521 165 0	C
C109, 209	Capacitor, fixed, ceramic: 0.02 μf -40%, +60%, 150 wvdc; Central ab DDM-203	515 180 0	B
C110, 210	Capacitor, fixed, electrolytic: 47 μf ± 20%, 50 wvdc; Sprague 150D475X005082	516 264 0	B
C111, 211	Capacitor, fixed, ceramic: 0.01 μf -40% +60%, 150 wvdc; Central ab DDM-103	515 151 0	B
C112, 212	Capacitor, fixed, electrolytic: 100 μf -10-, +100-, 6 wvdc; International Electronics APS-102	516 261 0	B
C13, 14	Capacitor, fixed, electrolytic: 100 μf ± 20%, 20 wvdc; Sprague 150D107X0020-S2	516 270 0	B
C15	Capacitor, fixed, electrolytic: 100 μf ± 20%, 20 wvdc; Sprague 150D107X0020-S2	516 269 0	B
C16	Capacitor, fixed, ceramic: 0.01 μf ± 10%, 25 v or 150 v	ORNL	
CR101, 102, 201, 202	Diode, silicon: Hughes Semiconductor 1N459	B614 007 0	B
CR103, 203	Diode, germanium: Clevite CTP462	614 043 0	B
D1	Chopper: 6.3 v, 70 cps, 120 ohm coil, DPDT per EAI specifications; James Electronics C-2335	C530 042 0	C
DS 101, 102, 103 201, 202, 203	Lamp, incandescent: 14 v, 0.08 amp, per EAI specifications; Hudson Lamp Co. 2317	A578 047 0	B
Q1, 3	Transistor, germanium: NPN; RCA 2N2270	B686 130 0	B
Q2, 4	Transistor, germanium: PNP; Amperex 2N2654	B686 129 0	B
Q5	Transistor, germanium: PNP; Amperex 2N2084	B686 131 0	B
Q6	Transistor, germanium: PNP; General Electric 2N1925	686 091 0	B
Q7	Transistor, germanium: NPN; Texas Instruments N558	686 093 0	B
Q8	Transistor, silicon: NPN; Motorola SM1136	C686 107 0	C
Q9, 10, 11	Transistor, germanium: PNP; General Electric 4JX1G655	C686 111 0	C
R101, 201	Resistor, fixed, composition: 3.9 megohms ± 5%, 1/4 w; Allen-Bradley CB	625 395 0	A
R102, 202	Resistor, fixed, composition: 47 kilohms ± 5%, 1/4 w; Allen-Bradley CB	625 473 0	A
R103, 203	Resistor, fixed, composition: 3.3 kilohms ± 5%, 1/4 w; Allen-Bradley CB	625 332 0	A
R104, 204	Resistor, fixed, composition: 1.8 kilohms ± 5%, 1/4 w; Allen-Bradley CB	625 182 0	A
R105, 205	Resistor, fixed, composition: 20 kilohms ± 5%, 1/4 w; Allen-Bradley CB	625 203 0	A

Table 2. Replaceable Parts List (continued)

Part No.	Description	EAI No.	Category
R106, 206	Resistor, fixed, composition: 1 kilohm ± 5%, 1/4 w; Allen-Bradley CB	625 102 0	A
R107, 207	Resistor, fixed, composition: 2.7 kilohms ± 5%, 1/4 w; Allen-Bradley CB	625 272 0	A
R108, 208	Resistor, fixed, composition: 7.5 kilohms ± 5%, 1/4 w; Allen-Bradley CB	625 752 0	A
R110, 210	Resistor, fixed, composition: 2.2 megohms ± 10%, 1/4 w; Allen-Bradley CB	625 225 1	A
R111, 211	Resistor, fixed, composition: 330 ohms ± 10%, 1/4 w; Allen-Bradley CB	625 331 1	A
R112, 212	Resistor, fixed, composition: 3.3 megohms ± 10%, 1/4 w; Allen-Bradley CB	625 335 1	A
R113, 213	Resistor, fixed, composition: 10 kilohms ± 5%, 1/4 w; Allen-Bradley CB	625 103 0	A
R114, 214	Resistor, fixed, composition: 4.7 kilohms ± 5%, 1/4 w; Allen-Bradley CB	625 472 0	A
R115, 215	Resistor, fixed, composition: 4.7 kilohms ± 10%, 1/4 w; Allen-Bradley CB	625 472 1	A
R116, 216	Resistor, fixed, composition: 100 ohms ± 10%, 1/4 w; Allen-Bradley CB	625 104 1	A
R117, 217	Resistor, fixed, composition: 68 kilohms ± 10%, 1/4 w; Allen-Bradley CB	625 683 1	A
R118, 119, 218, 219	Resistor, fixed, composition: 220 kilohms ± 10%, 1/4 w; Allen-Bradley CB	625 224 1	
R120, 220	Resistor, fixed, composition: 27 kilohms ± 10%, 1/4 w; Allen-Bradley CB	625 273 1	A
R121, 221	Resistor, fixed, composition: 10 kilohms ± 10-, 1/4 w; Allen-Bradley CB	625 103 1	A
R122, 222	Resistor, fixed, composition: 8.2 kilohms ± 10%, 1/4 w; Allen-Bradley CB	625 822 1	A
R123, 134, 223, 234	Resistor, fixed, composition: 270 kilohms ± 5%, 1/4 w; Allen-Bradley CB	625 274 0	A
R124, 224	Resistor, fixed, composition: 780 kilohms ± 5%, 1/4 w; Allen-Bradley CB	625 784 0	A
R125, 225, 127, 130, 227, 230	Resistor, fixed, composition: 10 kilohms ± 5%, 1/4 w; Allen-Bradley CB	625 103 0	A
R126, 226	Resistor, fixed, composition: 100 kilohms ± 5%, 1/4 w; Allen-Bradley CB	625 104 0	A
R128, R131, 228, 231	Resistor, fixed, composition: 220 ohms ± 5%, 1/5 w; Allen-Bradley CB	625 221 0	A
R129, 132, 229, 232	Resistor, fixed composition: 68 kilohms ± 5%, 1/4 w; Allen-Bradley CB	625 683 0	A
R133, 233	Resistor, fixed, composition: 4.7 kilohms ± 5%, 1/4 w; Allen-Bradley CB	625 472 0	A
R135, 235	Resistor, fixed, composition: 390 ohms ± 10%, 1/4 w; Allen-Bradley CB	625 391 1	A
R136, 236	Thermistor: 2600 ohms, 0.82 w; Keystone Carbon Co. RL1651T	Order by description	B

6. ACCEPTANCE TEST PROCEDURE

6.1 Test Equipment

The following procedure is based on the use of a special test fixture, ORNL Instrumentation and Controls Division drawing number Q-2605-6. The use of the fixture is not absolutely necessary to adequately test the module, but it will greatly facilitate the procedure. The following additional test instruments are required:

1. Special test chassis, circuit Q-2605-6, panel Q-2605-7
2. Regulated dc power supplies, +25 v, +15 v, and -15 v (all ±0.1%)
3. Voltmeter, 0.1% accuracy, digital or differential
4. Signal generator, sine wave, 20 Hz or less to 500 kHz
5. Oscilloscope, Tektronix 531, 541, 536, etc., or equal.

6.2 Adjustment Procedure

6.2.1 Visual Inspection

Check the module carefully for poor connections or solder joints. Slide a straightedge along the module bars on the circuit board side to ensure that none of the solder parts project beyond the bars.

6.2.2 Balance

Plug the module into the test chassis and turn the amplifier switch to amplifier 1.

Turn the function switch to the "Bal" position.

Apply power to the unit and balance each amplifier in turn by means of the balance pushbuttons and controls on the top of the module, and the front-panel meter on the test chassis. Connection to the meter is automatically made when the buttons are depressed.

It is normal, when the balance potentiometer is turned, for the meter reading to change suddenly and then fall back to a steady reading. If the meter reading continues to jump or drift after a few seconds, trouble is indicated.

6.3 Acceptance Test

6.3.1 Output Voltage Range

The output of the amplifier, as indicated by a voltmeter connected to the voltmeter jack, should swing at least ±12 v with no output load.

Switch the function selector switch to "1.3" and the signal input switch to "-10 V." In this connection the gain of the amplifier is 1.33. An input of -10 v should then produce plus 13.3 v output or should saturate the amplifier. The voltage range of the amplifier is satisfactory if an output of 12 v or more is obtained.

Switch the signal input switch to "+10 V." The output should be -12 v or greater.

6.3.2 Output Current

The amplifier output should deliver at least 20 ma when the output voltage is ±10 v.

Switch the function selector switch to "1.0" and the signal input to "+10 V." The gain is now 1.0 and the output should be -10.0 v.

Switch the load to 500 ohms. The output voltage should not change. Any change at all is indicative of trouble.

Repeat the procedure for an input of -10 v.

6.3.3 Frequency Response

The frequency response of the amplifier when connected as a unity-gain inverter (10-kilohm input and feedback resistors) should be flat within 3 db from dc to at least 200 kc. Turn the function selector switch to "Freq."

Connect a sine wave signal generator to the "Sig Gen" terminals, and switch the signal input switch to "Sig Gen." Adjust the frequency to the lowest the generator will deliver and the amplitude to 20 mv peak to peak, as measured on an oscilloscope.

The output should also be 20 mv peak to peak. Check the amplitudes and waveforms at several frequencies in the range from dc to 500 kc. The gain should not be less than 0.7 (-3 db) at any frequency up to 200 kc. The waveform should not be distorted at any frequency in the range. Record the frequency at which the response is down by 3 db (14 mv peak-to-peak output). Remove the sine-wave signal generator from the signal generator input jacks.

6.3.4 Noise and Ripple on Output

Noise in the spectrum from dc to 300 kc should be less than 400 μv peak to peak. Noise in the spectrum from dc to 200 cps should be less than 80 μv peak to peak.

Switch the function selector switch to the "Noise" position, and the amplifier selector switch to "Amplifier 1." Amplifier 2 is connected internally to have a gain of 10 and drive both a high-pass and a low-pass filter. (Note: Noise = $E_o/10$.)

Connect an oscilloscope to the low-pass filter output (L). The noise observed on the oscilloscope should be less than 800 μv peak to peak.

Connect the oscilloscope to the high-pass filter output (H). The noise amplitude should be less than 4 mv peak to peak.

Connect the oscilloscope to Amplifier 1, output 01 (not through filter), and observe the amplitude of the chopper spikes. The spikes should be not more than 2 mv peak to peak.

6.3.5 Integrator Drift

When the amplifier is connected as an integrator (capacitive feedback), the voltage drift at the output with the input shorted through a resistor should be less than 50 mv/sec.

Turn the function switch to "Int." Connect a sensitive voltmeter to the output "DVM."

Recheck the balance of Amplifier 1 (see step 2).

Turn the integrator switch from "Short" to "Start," and start timing. In 100 sec, the output should have drifted less than 5 mv.

6.3.6 Stability

The amplifier should show no signs of instability (oscillating) under a variety of loading conditions.

Turn the function switch to the "Stab" position. The signal input switch should be in the "Sig Gen" position. Connect an oscilloscope to the output of Amplifier 1 (scope) and adjust the oscilloscope gain high so that the amplifier noise is clearly visible. Check to see that no oscillation occurs for each of the following cases:

a. Sum junction C "In," load open
b. Sum junction C "In," load 500 ohms
c. Sum junction C "In," load 0.01 μf
d. Sum junction C "Out," load 0.1 μf and 500 ohms
e. Sum junction C "Out," load 0.1 μf.

With the Sum Junction C "In" and a load of 0.1 μf, oscillation is expected.

6.3.7 Overload

The amplifier should not be damaged by short circuiting the output.

Turn the function switch to position "1.0." Switch the signal input to "+10 V" and the load switch to "Short." Wait for about 2 min. Some of the incandescent lamps on the module should be glowing. Switch the load to "Open" and check that the output returns to exactly 10 v.

Repeat the above procedure for an input of -10 v.

6.3.8 Amplifier 2

Change the amplifier selector from "Amplifier 1" to "Amplifier 2" and repeat steps 2 through 9. It may be more convenient to test both amplifier 1 and amplifier 2 during each step of the procedure.

6.4 Additional Specification Tests

The acceptance tests of Sect. 6.3 are adequate for routine testing and maintenance of the amplifiers. Complete tests were originally supplied by the manufacturer, EAI, to check completely each item of performance in accordance with the purchase specifications; these are on file in the Reactor Controls Department of the Instrumentation and Controls Division.

DISTRIBUTION

1-20. J. L. Anderson
21. D. S. Asquith
22. A.E.G. Bates
23. A. L. Boch
24. C. J. Borkowski
25-34. W. D. Brown
35-36. C. T. Carney
37-39. O. C. Cole
40. T. E. Cole
41. B. L. Corbett
42. C. C. Courtney
43. R. A. Dandl
44. J. T. De Lorenzo
45. E. P. Epler
46. C. S. Harrill
47. C. F. Holloway
48. G. A. Holt
49. W. H. Jordan
50. W. E. Lingar
51. C. E. Mathews
52. T. L. McLean
53. R. V. McCord
54. L. C. Oakes
55. G. R. Owens
56. R. W. Peelle
57-59. W. Ragan
60. J. L. Redford
61. P. Rubel
62. J. B. Ruble
63. G. S. Sadowski
64-65. R. W. Tucker
66. D. D. Walker
67. K. W. West
68. H. N. Wilson
69-70. Central Research Library
71. Document Reference Section
72-76. Laboratory Records Department
77. Laboratory Records, ORNL R. C.
78. ORNL Patent Office
79-93. Division of Technical Information Extension
94. Laboratory and University Division, ORO