OAK RIDGE NATIONAL LABORATORY LIBRARIES
3 4456 0549658 5

CENTRAL RESEARCH LIBRARY
DOCUMENT COLLECTION

OAK RIDGE NATIONAL LABORATORY
operated by
UNION CARBIDE CORPORATION
NUCLEAR DIVISION
for the
U.S. ATOMIC ENERGY COMMISSION

ORNL-TM-1638, Part 24
COPY NO. - 66
DATE - January 9, 1968

NUCLEAR INSTRUMENT MODULE MAINTENANCE MANUAL

PART 24

COINCIDENCE MATRIX MONITOR, ORNL MODEL Q-2624

E. N. Fray

ABSTRACT

The circuit, applications, and maintenance instructions for a relay Coincidence Matrix Monitor are described. The circuit is constructed in a "4-unit" module of the ORNL Modular Reactor Instrumentation series Q-2600, and is intended for use in safety systems of reactors employing this series of instruments.

OAK RIDGE NATIONAL LABORATORY
CENTRAL RESEARCH LIBRARY
DOCUMENT COLLECTION
LIBRARY LOAN COPY
DO NOT TRANSFER TO ANOTHER PERSON
If you wish someone else to see this document, send in name with document and the library will arrange a loan.

NOTICE This document contains information of a preliminary nature and was prepared primarily for internal use at the Oak Ridge National Laboratory. It is subject to revision or correction and therefore does not represent a final report.

LEGAL NOTICE

This report was prepared as an account of Government sponsored work. Neither the United States, nor the Commission, nor any person acting on behalf of the Commission:

A. Makes any warranty or representation, expressed or implied, with respect to the accuracy, completeness, or usefulness of the information contained in this report, or that the use of any information, apparatus, method, or process disclosed in this report may not infringe privately owned rights; or

B. Assumes any liabilities with respect to the use of, or for damages resulting from the use of any information, apparatus, method, or process disclosed in this report.

As used in the above, "person acting on behalf of the Commission" includes any employee or contractor of the Commission, or employee of such contractor, to the extent that such employee or contractor of the Commission, or employee of such contractor prepares, disseminates, or provides access to, any information pursuant to his employment or contract with the Commission, or his employment with such contractor.

CONTENTS

Page

1. DESCRIPTION 4
   1.1 General 4
   1.2 Construction 4
   1.3 Application 4
   1.4 Applicable Drawings 4

2. THEORY OF OPERATION 4

3. OPERATING INSTRUCTIONS 6
   3.1 Installation 6
   3.2 Operating Controls 7
   3.3 Connections 7

4. MAINTENANCE INSTRUCTIONS 7

5. REPLACEABLE PARTS LIST 7

OAK RIDGE NATIONAL LABORATORY LIBRARIES

3 4456 0549658 5

1. DESCRIPTION

1.1 General

The Coincidence Matrix Monitor is designed to monitor, and indicate on front-panel meters, the current through each leg and the total current in a two-out-of-three relay matrix.

1.2 Construction

The coincidence matrix monitor is constructed in a module 5.66 in. wide, 4.72 in. high, and 11.9 in. deep. It is a standard "4-unit" plug-in module of the ORNL Modular Reactor Instrumentation series depicted on drawings Q-2600-1 through Q-2600-5.

1.3 Application

The Coincidence Matrix Monitor is intended to monitor and to regulate the current supplied to a safety-rod scram clutch, or magnet, in a nuclear reactor. Fig. 1 is a diagram of a typical application, where relay contacts A, B, and C come from separate safety channels.

1.4 Applicable Drawings

The following list gives the drawing numbers (ORNL Instrumentation and Controls Division drawing numbers) and subtitles for the Coincidence Matrix Monitor.

1.	Q-2624-1	Circuit.
2.	Q-2624-2	Details.
3.	Q-2624-3	Metalphoto Panel.
4.	Q-2624-4	Assembly.
5.	Q-2624-5	Parts List.

2. THEORY OF OPERATION

As indicated in Fig. 1, the total current delivered to the clutch is adjusted by resistor R1. If all the relay contacts are closed, and since resistors R2, R3, and R4 are equal, the current will divide equally in the three legs of the matrix. The total current goes through the clutch and returns to ground through the "clutch current" meter. The maximum voltage that can be applied to the clutch is limited by zener diode D1 to +30 v. An external meter may be connected between pins 10 and 14.

ORNL DWG. 68-1293

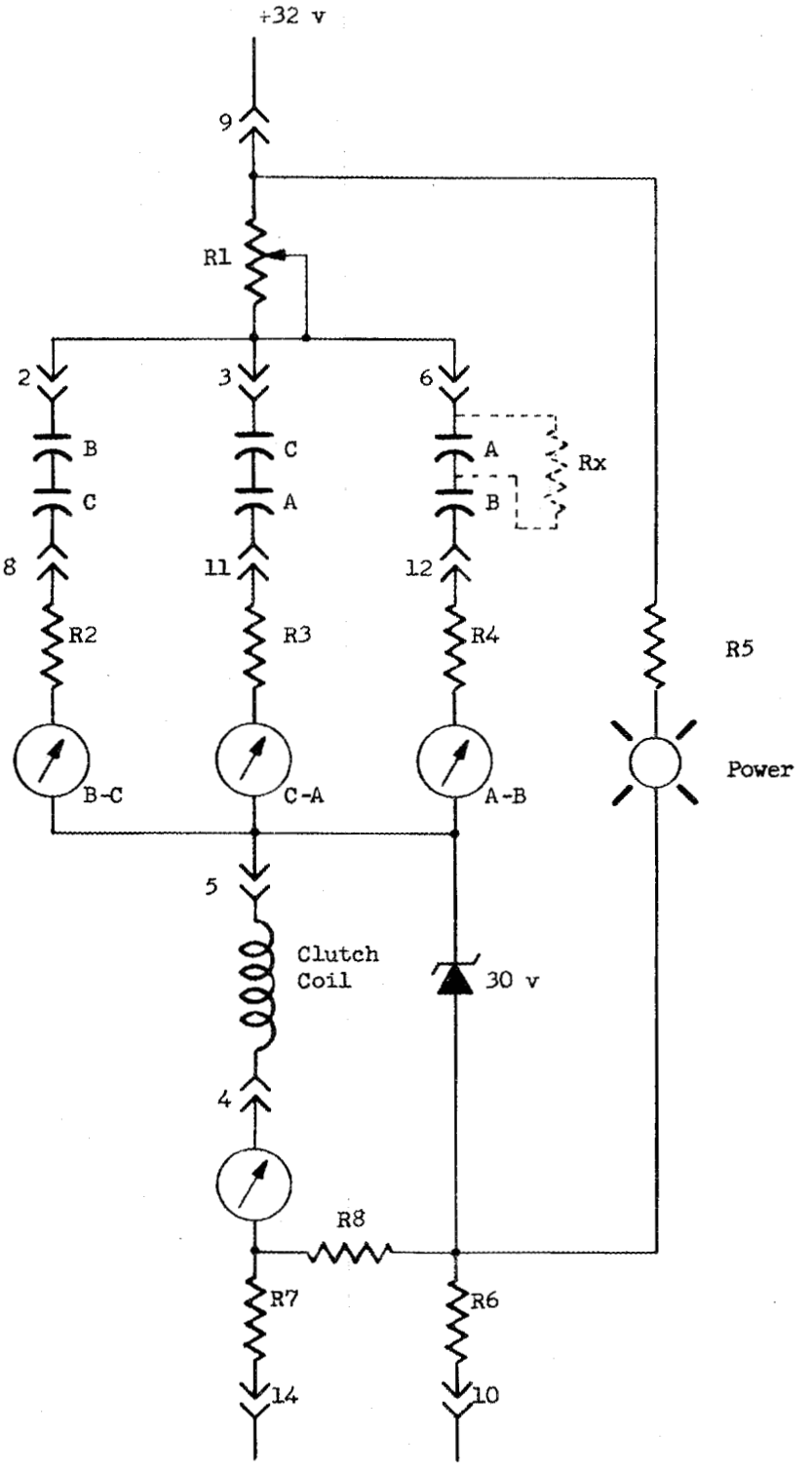

Fig. 1. Coincidence Matrix Monitor.

If a single channel trips, two legs of the matrix are opened, and all the current flows through the remaining leg. Therefore, the tripping of either of the two remaining channels causes the third leg to open, which interrupts the clutch current. With two legs open, the resistance of the matrix is increased by a factor of three; thus resistors R2, R3, and R4 must be small enough so that the current delivered to the clutch is not decreased to less than a reliable holding current. To ensure that the clutch coil can be de-energized, the monitor must be able to detect leakage paths around the relay contacts. If the leakage resistance is small enough, sufficient current can be supplied to keep the clutch energized with the contacts open. For example, suppose channel A has been tripped. However, one contact, instead of completely opening, can now be represented by resistance R_x. The minimum resistance value of interest can be found by the equation

$$i_{cm} = \frac{E}{R_4 + R_c + R_x} ,$$

where i_{cm} is the minimum clutch holding current, R_c is the clutch resistance, and E is the maximum supply voltage. The clutch current will divide between the branches B-C and A-B, where the current through A-B is given by the equation

$$i_x = i_{cm}\left(\frac{R_2}{R_4 + R_x}\right) .$$

The requirement is that the current i_x be easily detected on the meter A-B.

3. OPERATING INSTRUCTIONS

3.1 Installation

The Coincidence Matrix Monitor is a module in the ORNL Modular Reactor Instrumentation series. Like the other modules of this series, it has standard connectors and dimensions and has a pin- and hole-code on the rear plate so that the module will not be inserted in a wrong location in a drawer. The module is installed by placing it in its proper location, inserting the module firmly, and tightening the thumb screw. The module may be plugged in with the power on without damage.

3.2 Operating Controls

3.2.1 Current Adjustment

A recessed screw-driver adjustment, labeled "Clutch Current Adjust," is located on the front panel. The proper operating clutch-coil current determines this adjustment.

3.2.2 Panel Meters

The panel meters are calibrated to indicate from 0 to 250 ma. These meters are in series with the clutch and indicate coil current directly.

3.3 Connections

All connections are made through the rear connector P22 when the module is inserted.

4. MAINTENANCE INSTRUCTIONS

This module is designed to operate continuously with a minimum of maintenance and adjustment. Should a failure occur, any part listed in the Replaceable Parts List, Sect. 5, may be replaced.

5. REPLACEABLE PARTS LIST

A description and on ORNL Stores number for all replaceable parts are given in Table 1.

Table 1. Replaceable Parts List

Part No.	ORNL Stores No.	Description
R2, R3, R4	06-936-1950	Resistor, 50 ohms, ±5%, 10 w, ww, Mallory No. RW29G-500.
R5		Resistor, 330 ohms, ±5%, 1 w, A-B.
R6, R7		Resistor, 8200 ohms, ±5%, 1/2 w, A-B.
R8		Resistor, 4.3 ohms, ±5%, 1/2 w, A-B.
M1, M2, M3, M4		Meter, 0-250 milliamperes, dc, 0.6-ohm coil, accuracy ±2% full scale, 50-division scale, Simpson Model 1212C, catalog No. 6172.
I1	06-918-1775	Assembly, pilot light, subminiature, Dialco No. 101-3830-937.

ORNL-TM-1638
Part 24

INTERNAL DISTRIBUTION

1-20. J. L. Anderson
21. D. S. Asquith
22. A. E. G. Bates
23. C. J. Borkowski
24-33. W. D. Brown
34-35. C. T. Carney
36-38. O. C. Cole
39. C. C. Courtney
40. R. A. Dandl
41. J. T. DeLorenzo
42. E. P. Epler
43. C. S. Harrill
44. C. F. Holloway
45. G. A. Holt
46. W. H. Jordan
47. W. E. Lingar
48. C. E. Mathews
49. T. L. McLean
50. R. V. McCord
51. L. C. Oakes
52. G. R. Owens
53. R. W. Peelle
54-56. W. Ragan
57. J. L. Redford
58. P. Rubel
59. J. B. Ruble
60. G. S. Sadowski
61-62. R. W. Tucker
63. D. D. Walker
64. K. W. West
65. H. N. Wilson
66-67. Central Research Library
68. Document Reference Section
69-73. Laboratory Records Department
74. Laboratory Records, ORNL R. C.
75. ORNL Patent Office
76-90. Division of Technical Information Extension
91. Laboratory and University Division ORO