OAK RIDGE NATIONAL LABORATORY LIBRARIES
3 4456 0549839 7

164

OA L LABORATORY
operated by
UNION CARBIDE CORPORATION
NUCLEAR DIVISION
for the
U.S. ATOMIC ENERGY COMMISSION

ORNL-TM-2034, vol. I

CENTRAL RESEARCH LIBRARY
DOCUMENT COLLECTION

REACTOR OPERATOR STUDY HANDBOOK
(Programmed Instruction Version)

VOLUME IV - HEAT THEORY AND FLUID FLOW

OAK RIDGE NATIONAL LABORATORY
CENTRAL RESEARCH LIBRARY
DOCUMENT COLLECTION
LIBRARY LOAN COPY
DO NOT TRANSFER TO ANOTHER PERSON
If you wish someone else to see this document, send in name with document and the library will arrange a loan.

NOTICE This document contains information of a preliminary nature and was prepared primarily for internal use at the Oak Ridge National Laboratory. It is subject to revision or correction and therefore does not represent a final report.

LEGAL NOTICE

This report was prepared as an account of Government sponsored work. Neither the United States, nor the Commission, nor any person acting on behalf of the Commission:

A. Makes any warranty or representation, expressed or implied, with respect to the accuracy, completeness, or usefulness of the information contained in this report, or that the use of any information, apparatus, method, or process disclosed in this report may not infringe privately owned rights; or

B. Assumes any liabilities with respect to the use of, or for damages resulting from the use of any information, apparatus, method, or process disclosed in this report.

As used in the above, "person acting on behalf of the Commission" includes any employee or contractor of the Commission, or employee of such contractor, to the extent that such employee or contractor of the Commission, or employee of such contractor prepares, disseminates, or provides access to, any information pursuant to his employment or contract with the Commission, or his employment with such contractor.

ORNL-TM-2034

Contract No. W-7405-eng-26

OPERATIONS DIVISION

REACTOR OPERATOR STUDY HANDBOOK
(Programmed Instruction Version)

VOLUME IV - HEAT THEORY AND FLUID FLOW

S. D. Sheppard

Editor

C. D. Cagle

DECEMBER 1968

OAK RIDGE NATIONAL LABORATORY
Oak Ridge, Tennessee
operated by
UNION CARBIDE CORPORATION
for the
U.S. ATOMIC ENERGY COMMISSION

OAK RIDGE NATIONAL LABORATORY LIBRARIES

3 4456 0549839 7

FOREWORD

It is suggested that this programmed text be used as an aid in the study of reactor technology. It is not the intent of the author and editor that the text be considered a finished product. While field testing of both the subject matter and the continuity of thought has been limited, the need for study material in programmed form was a basic consideration in the decision to publish the text. Revisions may be made at any time to correct errors, to expand the subject matter coverage, or to update the reactor technology. If the text is used with these reservations, and in conjunction with other study helps, it can be the basis for very rewarding individual study on the part of the student.

CONTENTS

Section	Title	Page
	INTRODUCTION	iv
	INSTRUCTIONS	v
	SAMPLE FRAMES	vi
IV-1.	HEAT	1
	1.1. Introduction	1
	1.2. Temperature Units	4
	1.3. Heat Units	7
	1.4. Thermal Energy and Power	11
	1.5. Thermal Stress	16
	1.6. Self Test	20
IV-2.	HEAT TRANSFER	23
	2.1. Sources of Heat	23
	2.2. Heat Conduction	28
	2.3. Heat Transfer by Convection	30
	2.4. Self Test	37
IV-3.	FLUID MECHANICS	41
	3.1. Hydraulic and Pneumatic Pressure	41
	3.2. Static Pressure and Force	45
	3.3. Dynamic Pressures and Forces	50
	3.4. Laminar and Turbulent Flow	56
	3.5. Self Test	61
IV-4.	HEAT PRODUCTION AND CONTROL IN NUCLEAR REACTORS	64
	4.1. Fission-Produced Heating	64
	4.2. Temperature and Heat Transfer in Reactors	68
	4.3. Heat Transfer Rates	72
	4.4. Determination of Operating Parameters	78
	4.5. Afterheat	90
	4.6. Self Test	93
IV-5.	MISCELLANEOUS ITEMS	99
	5.1. Water Hammer	99
	5.2. Coolant Purity	102
	5.3. Self Test	114

REACTOR OPERATOR STUDY HANDBOOK
(Programmed Instruction Version)

VOLUME IV. HEAT THEORY AND FLUID FLOW

As a part of the Reactor Operator Training Program of Operations Division, Oak Ridge National Laboratory, five areas of instruction have been programmed for individual study. They are:

Volume I	-	Elementary Mathematics Review
Volume II	-	Radiation Safety and Control
Volume III	-	Reactor Physics
Volume IV	-	Heat Theory and Fluid Flow
Volume V	-	Instrumentation and Controls

These programmed studies are a part of a course in reactor operation that includes classwork, lectures, and on-the-job training. At the end of the course, the operator trainee is tested for competence in all areas of reactor operations before being certified to operate a particular reactor.

It is suggested that the programs be studied in the sequence given above; however, sequential dependence has been minimized so that they may be studied either individually or as an integrated group.

The author and editor would like to especially acknowledge the patience and assistance of the members of the Operations Division clerical staff who worked on this report; namely, Barbara Burns, Gladys Carpenter, Milinda Compton, Linda Comstock, and Joanne Nelson.

INSTRUCTIONS

The material contained in this manual has been prepared using a technique called "programmed instruction". This technique of instruction consists of:

1. Presenting ideas or information in small, easily digestible steps called "frames".
2. Allowing you to set your own pace.
3. Encouraging response in an active way so that you have a stronger impression of the idea presented.
4. Letting you know immediately if your answer is right, thus reinforcing your impression.
5. Presenting many clues at first to help you arrive at the correct answer. (As you progress, the number of clues is reduced.)

A few sample frames are found on the next page. These will be used to illustrate the proper use of "programmed instruction". Most frames will require you to respond by filling in a blank, or blanks, to complete a sentence. Other frames will give you a choice of several responses. A few frames are for informational purposes only and require no response. The correct response to a given frame is always found on the right side of the page adjacent to the following frame. When reading a frame, a sheet (or strip) of paper should be used to cover the area below the dotted line which follows the frame. After completely reading a frame, you should write your response on a piece of paper. Next, move the paper down the page until you reach the next dotted line or turn the page. This will uncover the next frame and the correct response for the frame you have just completed. Compare your response with the correct response. If they do not match, read that frame again before moving on to the next one; <u>do not proceed</u> until you understand the information in the frame you are reading. If the responses do match, proceed to the frame you have just uncovered.

At the end of each section, there are self-test questions for review. If you miss one of the self-test questions, repeat the pertinent frames. It is not enough to respond correctly as you proceed through the material; you must remember correctly at the end of the program and even later. You should attempt to complete each section once you have started.

SAMPLE FRAMES

i. Programmed instruction is a method of presenting information in short paragraphs called "frames". These _____ usually contain only one or two concepts for the student to grasp.

- - - - - - - - - -

ii. By requiring you to think of the appropriate response and to write that _____ on a piece of paper, you take an active part in the program and thereby reinforce your learning.

frames

- - - - - - - - - -

iii. This method of instruction, called _____ _____, allows you to proceed with the material at a rate which you determine for yourself.

response

- - - - - - - - - -

iv. Programmed instruction provides the appropriate response immediately and thus should reinforce the student's _____.

programmed instruction

- - - - - - - - - -

learning

VOLUME IV. HEAT THEORY AND FLUID FLOW

The purpose of this study is to introduce the operator to some general principles of both heat theory and the principles of fluid flow. In the operation of nuclear reactors, the applications of these two sets of principles are inseparably connected since fissioning uranium produces heat and flowing fluids are used to dispose of the heat.

In this study we shall define those terms and discuss those principles that we feel will be of greatest benefit to operators of nuclear reactors.

SECTION IV-1

HEAT

1.1. Introduction

1. In a study of heat it is often helpful to start with something well known like combustion, commonly called burning.

- - - - - - - - - -

2. Combustion or burning is a chemical reaction in which oxygen combines rapidly with some material which is flammable, such as paper, wood, oil, or natural gas, to name a few.

- - - - - - - - - -

3. If the oxidation of a piece of paper is rapid enough, combustion takes place and heat and light are emitted. We say the paper _____.

- - - - - - - - - -

4. If the oxidation is slow, the paper will not burn but may become yellow and brittle. Any heat given off is emitted so slowly that we do not notice it. burns

- - - - - - - - - -

5. Not all oxidation reactions (the rusting of iron is another good example) produce burning. When iron rusts, the oxidation is (too rapid, too slow) for burning to take place.

- - - - - - - - - -

6. If oxidation is rapid enough for detectable heat and light to be emitted, the reaction is called combustion or _____. — too slow

- - - - - - - - - -

7. Some of the effects of burning are the light and _____ that are emitted. — burning

- - - - - - - - - -

8. We hope that you will not consider it an insult to your intelligence to ask, how do we know that light and heat are given off? — heat

- - - - - - - - - -

9. The simplest answer would be that we <u>see</u> the light and <u>feel</u> the heat.

- - - - - - - - - -

10. If something burns near you, you see some light and feel some _____.

- - - - - - - - - -

11. How do you feel heat? Normally the sensory nerves in your skin detect a change in the <u>temperature</u> of whatever they touch, the air, the floor, the wall. — heat

- - - - - - - - - -

12. You notice heat because it produces a change in the _____ of things which you touch.

- - - - - - - - - -

13. If a body absorbs some heat, we normally expect its temperature to increase. — temperature

- - - - - - - - - -

14. Conversely, if a body loses heat, we expect its temperature to _____.

- - - - - - - - - -

15. A good example is a cup of coffee. If the coffee is too hot, let it sit for a few minutes and it will give up some of its heat to the air (we will discuss this heat transfer later). The coffee, having lost heat, will have a _____ temperature. — decrease

- - - - - - - - - -

16. One of the properties of heat, then, is its capacity to cause a change in _____. — lower

- - - - - - - - - -

17. Perhaps it would be better to say that the temperature of a body is one measure of its heat content. — temperature

- - - - - - - - - -

18. If a container of water is placed on a stove where it can absorb heat, its temperature will _____.

- - - - - - - - - -

19. The temperature that the water has at any moment is one measure of its _____ content at that moment. — rise

- - - - - - - - - -

1.2. Temperature Units

20. Temperature changes are measured in units called "degrees". There are a number of temperature scales; but the two most common are the Fahrenheit scale, the scale commonly used in the United States, and the Centigrade or Celsius scale which is the one used by most of the rest of the world. More heat is required to produce a one-degree change in Centigrade than for a one-degree change in Fahrenheit. heat

- - - - - - - - -

21. The principal difference between the Fahrenheit and the Centigrade scales is in the amount of heat necessary to produce a temperature change of one _____.

- - - - - - - - -

22. In Fig. 1.1, we see the two temperature scales compared, with the freezing and boiling points of water used as reference points. degree

- - - - - - - - -

	Fahrenheit	Celsius
Boiling point of water at one atmosphere of pressure	212°	100°
Freezing point of water at one atmosphere of pressure	32°	0°

Fig. 1.1. Fahrenheit and Centigrade Scales Compared

- - - - - - - - -

23. You will note that there are 180 Fahrenheit degrees between the freezing and boiling points of water at standard atmospheric pressure while, on the Celsius scale, there are only _____ degrees between the two reference points.

- - - - - - - - - -

24. If a temperature change of 180°F (Fahrenheit) is the equivalent of 100°C (Centigrade), a change of 18°F would be the equivalent of _____°C. 100

- - - - - - - - - -

25. Thus, the degree on the Fahrenheit scale is a little over one-half as large as the degree on the Centigrade scale. Actually, 10

$$1°F = \frac{5}{9}°C ,$$

or

$$1°C = 1.8°F .$$

- - - - - - - - - -

26. If the two drawings below represent degree marks on thermometers, the degree on the (left, right) side should be marked Fahrenheit; and the other should be marked Centigrade.

- - - - - - - - - -

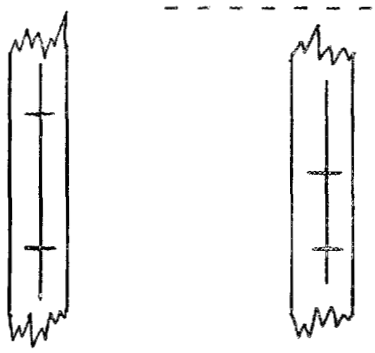

- - - - - - - - - -

27. However, 0°C, the freezing point of water, is 32°F; so in order to change from a temperature on the Fahrenheit scale to a temperature on the Centigrade scale, we must use an equation such as

$$C = \frac{5}{9}(F - 32) .$$

right

- - - - - - - - - -

28. While the above equation allows a person to solve for °C when you know °F, it may be revised with simple algebra to solve for °F when you know °C.

- - - - - - - - - -

29. If a room has a temperature of 77°F and you wish to know the temperature in °C, you subtract 32° from 77° to give 35°; then, multiply the 35° by 5/9. The Centigrade temperature which is the equivalent of 77°F is _____.

- - - - - - - - - -

30. If you are considering just a change in temperature (ΔT) such as the ΔT of the coolant water through a reactor core, you would consider only the fact that a degree F is 5/9 as large as a degree C. Thus there would be (more, fewer) degrees C than degrees F.

25°C

- - - - - - - - - -

31. For example, if the ΔT across a reactor core is from 95°F to 140°F, that is 45°F, the same ΔT in °C would be

fewer

$$\Delta T(°C) = \frac{5}{9}\Delta T(°F)$$

and

$$\Delta T(°C) = _____ °C.$$

- - - - - - - - - -

32. In order to furnish more practice than the above two examples, we have inserted Table 1.1 with blank spaces provided for you to fill in the answers. 25

- - - - - - - - - -

Table 1.1. Temperature Equivalents

a. -22°F = _____°C ;
b. 14°F = _____°C ;
c. _____°F = 5°C ;
d. _____ = 20°C ;
e. 98.6°F = _____°C ;
f. _____°F = 150°C .

- - - - - - - - - -

33. The ΔT between the temperatures a and b in Table 1.1 is 36°F. If you solve for ΔT in °C by the equation $\Delta T_{\circ C} = \frac{5}{9}\Delta T_{\circ F}$, $\Delta T_{\circ C}$ = _____°C.

a. -30 ;
b. -10 ;
c. +41 ;
d. +68 ;
e. +37 ;
f. +302 .

- - - - - - - - - -

34. Note that the ΔT of 20°C that you just calculated is the difference between -30°C and -10°C as shown in the Table 1.1. 20

- - - - - - - - - -

35. The ΔT in °C between items d and f in Table 1.1 is 130°C. If $\Delta T_{\circ C} = \frac{5}{9}\Delta T_{\circ F}$, $\Delta T_{\circ F}$ is _____°F.

- - - - - - - - - -

1.3. Heat Units

36. We have mentioned that one of the ways we determine that matter has been heated is that we note a change in temperature. And, we have discussed two temperature scales by which we measure these changes. 234

- - - - - - - - - -

37. In addition to the temperature changes of matter, there are two other factors that we must consider in order to measure the amount of heat that causes the temperature change.

- - - - - - - - - -

38. Early experimenters noted that the amount of a substance (the number of pounds) that they heated was one factor and the kind of substance was the other factor. Some substances would absorb more heat than others for a given temperature change.

- - - - - - - - - -

39. The amount of heat that a substance will absorb to produce a given temperature change depends on both the amount of the substance and the _____ of substance.

- - - - - - - - - -

40. In the United States, engineers use the "British thermal unit" (abbreviated Btu) to measure heat. The Btu is defined as the amount of heat necessary to raise the temperature of one pound of water one degree Fahrenheit.

kind

- - - - - - - - - -

41. If the temperature of a pound of water is raised one degree Fahrenheit, the water has absorbed an amount of heat equal to _____.

- - - - - - - - - -

42. If the temperature of 5 lb of water is raised 20°F, each pound of water will require 20 Btu of heat so the 5 lb will require _____ of heat.

1 Btu

- - - - - - - - - -

43. The amount of heat (the number of Btu) that a substance must absorb in order to raise the temperature of a pound of it one degree Fahrenheit varies from one substance to another. 100 Btu

- - - - - - - - - -

44. The amount of heat that one pound of a material such as copper must absorb, in order to raise its temperature one degree F, is called its <u>specific heat</u>. <u>Specific heat</u> has the units $\frac{\text{Btu}}{\text{lb} \cdot {}^\circ\text{F}}$.

- - - - - - - - - -

45. By definition, the specific heat of water is $1 \frac{\text{Btu}}{\text{lb} \cdot {}^\circ\text{F}}$.

- - - - - - - - - -

46. We would expect the specific heat of copper to (be, not be) the same as the specific heat of water.

- - - - - - - - - -

Table 1.2. Specific Heats of Substances within the Temperature Range Indicated

Substance	Specific Heat	Temperature Interval
Aluminum	0.217	17-100°C
Brass	0.094	15-100°C
Copper	0.093	15-100°C
Glass	0.199	20-100°C
Iron	0.113	18-100°C
Lead	0.031	20-100°C
Silver	0.056	15-100°C

47. In order to calculate the amount of heat required to raise the temperature of a given amount of a substance a given number of degrees, we use the equation

not be

$$Q \text{ (for heat)} = mc\Delta T$$

where

Q = heat, in the unit _____

m = amount of the substance, in pounds

c = specific heat (the unit is $\frac{\text{Btu}}{\text{lb} \cdot {}^\circ\text{F}}$)

ΔT = the temperature change in the unit _____ .

- - - - - - - - - -

48. The equation $Q = mc\Delta T$ could be written as a word equation: Btu of heat = _____ of a substance times the specific heat of the substance times the temperature change in degrees _____.

Btu, °F

- - - - - - - - - -

49. If 20 lb of water are heated from 90°F to 140°F, the water must absorb _____Btu of heat.

pounds, F

$$\boxed{1000, \text{ because Btu} = 20 \text{ lb} \times \frac{1 \text{ Btu}}{\text{lb} \cdot {}^\circ\text{F}} \times 50^\circ\text{F}}$$

- - - - - - - - - -

50. If the temperature of a 20-lb iron tank (specific heat of iron is $0.113 \frac{\text{Btu}}{\text{lb} \cdot {}^\circ\text{F}}$) is raised from 90°F to 140°F, the iron must have absorbed _____ Btu of heat.

- - - - - - - - - -

51. Note, from the above problems, that water will absorb (more, less) heat per pound per °F than iron. 113

- - - - - - - - - -

> Engineers in other countries usually use a heat unit called the calorie. Where the heat unit is the calorie, the amount of the substance heated is measured in grams, the specific heat is in the unit $\frac{\text{calorie}}{\text{gm} \cdot {}^\circ\text{C}}$, and the temperature change is in Centigrade degrees. The calorie is defined as the amount of heat that must be absorbed by one gram of water in order to raise its temperature one Centigrade degree.

more

- - - - - - - - - -

1.4. Thermal Energy and Power

52. While heat has been used for thousands of years for warmth and the cooking of food, it has been only in the last 200 years that men have recognized that heat is actually a form of energy.

- - - - - - - - - -

53. Energy is the capacity that something has to do work; and it was only after steam engines were made practical that it was recognized that the working component of steam was its heat.

- - - - - - - - - -

54. There are many forms of energy such as muscular energy, electrical energy, and light energy. These are all energy forms because they have the capacity to do _____.

- - - - - - - - - -

55. Heat is often called thermal energy. "Thermal" is a word that comes from the Greek word "therme" which means heat. — work

- - - - - - - - - -

56. While the common unit for measuring heat or _____ energy is the Btu, we often measure this energy in the unit foot-pound, of mechanical energy, or the unit watt-hour, of electrical energy.

- - - - - - - - - -

57. You may not be familiar with the energy unit foot-pound, but you surely recognize the unit of electrical energy, the watt-hour or kilowatt-hour, because you buy electricity from TVA for a few cents per _____-hour. — thermal

- - - - - - - - - -

58. It is common practice to measure the thermal energy produced in nuclear reactors in the unit megawatt-days (mega means one million). A million watts of energy produced or expended in one day is a _____-day. — kilowatt

- - - - - - - - - -

59. The power level of the ORR is 30 Mw (megawatts). If the ORR operates for 7 days at this power level, its _____-energy production is _____ Mw-days. — megawatt

- - - - - - - - - -

60. Note that in Frame 59 we spoke of the power level of the ORR being 30 Mw. No time element was mentioned. — thermal, 210

- - - - - - - - - -

61. Power is defined as the rate at which work is done or energy is produced.

$$\text{Power} = \frac{\text{Energy}}{\text{Time}}$$

- - - - - - - - - -

When an engine can do work at the rate of 33,000 ft pounds per min, it is given a power rating of <u>one horsepower</u>.

- - - - - - - - - -

62. If the thermal energy output of the ORR is 30 Mw-days and Power = Energy/Time, the thermal-power level of the ORR is $\frac{30 \text{ Mw days}}{1 \text{ day}} = 30$ Mw.

- - - - - - - - - -

63. The amount of thermal _____ produced by the ORR is 30 Mw.

- - - - - - - - - -

64. We have said that thermal <u>energy</u>, in Btu, can be calculated by knowing m, c, and ΔT. We can use the same equation, $Q = mc\Delta T$, for calculating <u>power</u> by making the equation: power

$$\frac{Q}{t} = \frac{m}{t}c\Delta T \ .$$

Q is the symbol for Btu of thermal energy. $\frac{Q}{t}$ is the symbol for Btu/time of thermal _____.

- - - - - - - - - -

65. Instead of measuring pounds of water, we measure pounds/sec or gallons/min of coolant water. The specific heat does not change, and we measure the ΔT across the reactor core in Fahrenheit degrees. power

- - - - - - - - - -

66. When the HFIR operates at full power, the cooling water flows through the reactor core at about 16,000 gal/min. By converting gallons of water to pounds (at 8.25 lb/gal) and time in minutes to hours, we calculate that about 7,920,000 lb of water are heated each hour.

- - - - - - - - - -

67. If the ΔT across the reactor core is about 43°F:

$$\frac{Q}{t} = 7.92 \times 10^6 \frac{\text{lb}}{\text{hr}} \times 1 \frac{\text{Btu}}{\text{lb} \cdot {}^\circ\text{F}} \times 43^\circ\text{F} = 340.6 \times 10^6 \frac{\text{Btu}}{\text{hr}} .$$

If

$$3.41 \frac{\text{Btu}}{\text{hr}} = 1 \text{ Mw} ,$$

the power of the HFIR is:

$$340.6 \times 10^6 \frac{\text{Btu}}{\text{hr}} \div \frac{3.41 \text{ Btu}}{\text{hr} \cdot \text{Mw}} \approx 100 \text{ Mw} .$$

- - - - - - - - - -

68. Thus, given a little time, we can calculate thermal power by starting with the heat energy equation Q = _____.

- - - - - - - - - -

69. If the operator had to use this system every hour to calculate the thermal power, he would have little time for anything else. $mc\Delta T$

- - - - - - - - - -

70. So, we combine a number of the conversion factors, such as those changing gallons to pounds and seconds to hours, into one conversion factor (1.465×10^{-4}). Now we can calculate power in megawatts by the equation:

$$Mw = \frac{gal}{min} \times \Delta T \times 1.465 \times 10^{-4} .$$

- - - - - - - - - -

71. The operator can use the equation

$$Mw = \text{water flow in gal/min} \times \Delta T \times 1.465 \times 10^{-4}$$

to calculate the thermal power very quickly.

- - - - - - - - - -

72. If the cooling water flow is 16,000 gpm and the ΔT is about 43°F, the thermal power in Mw = 16,000 gpm × 43°F × 1.465×10^{-4} ≈ _____ Mw.

- - - - - - - - - -

73. It must be remembered that the constant (1.465×10^{-4}) can be used only when the coolant is light water, the coolant flow is measured in _____/_____, and the temperature change is measured in _____ degrees. 100

- - - - - - - - - -

74. The coolant at the ORR is light water and the coolant flow is about 18,000 gpm. If the ΔT across the reactor is 11.4°F, the power level is _____. gal/min, Fahrenheit

- - - - - - - - - -

1.5. Thermal Stress

75. Heat produces a number of phenomena in a material in addition to a temperature change. The phenomenon we will discuss now is thermal expansion. 30 Mw

- - - - - - - - - -

76. In most cases, when a substance is heated, it gets larger; it _____.

- - - - - - - - - -

77. If you fill your gasoline tank full on a summer day and then allow the car to sit in the sun, the gasoline will overflow because when it absorbs heat it _____. expands

- - - - - - - - - -

78. Since the expansion of the gasoline is in three dimensions, we call it volume expansion. expands

- - - - - - - - - -

79. If the expansion were primarily in only one direction, such as in the case of a long wire or rod, we would be interested only in the change in length (linear change) caused by the heating or cooling of the material.

- - - - - - - - - -

80. Linear expansion is the change in _____ when the substance is heated.

- - - - - - - - - -

81. We must be concerned with both linear and volume expansion because all structural materials expand or contract when they are heated or cooled. length

- - - - - - - - - -

82. Experimenters have found that few materials expand the same amount with a given temperature change.

- - - - - - - - - -

83. The <u>coefficient of linear expansion</u> of a substance is the amount the length will change, per unit length, for a temperature rise of one degree Centigrade.

- - - - - - - - - -

84. The <u>coefficient of volume expansion</u> is the amount the _____ will change, per unit volume, for a temperature change of one degree Centigrade.

- - - - - - - - - -

85. The coefficient of linear expansion for steel is 12×10^{-6} per °C. This means that a steel rail will expand 12 millionths of a foot for every foot of length, when its temperature is increased _____. volume

- - - - - - - - - -

86. The equation for finding this change in length is: 1°C

$$\Delta \ell = \ell_o \alpha \Delta T$$

where

$\Delta \ell$ is the change in length
ℓ_o is the original length
α is the coefficient of linear expansion
ΔT is the temperature change in °C .

- - - - - - - - - -

87. If a 30 ft railroad rail changes temperature from 20°C to 35°C on a summer day, it will expand _____ ft.

- - - - - - - - - -

$\boxed{0.0054 \text{ ft}}$, because $\Delta\ell = 30 \text{ ft} \times 12 \times 10^{-6}/°C \times \boxed{15°C}$

- - - - - - - - - -

88. If you change 0.0054 ft to inches, you will find that the rail expands about 1/16 in.

- - - - - - - - - -

89. The equation for volume expansion is very similar to the linear-expansion equation. It is:

$$\Delta V = V_o \beta \Delta T$$

where:

ΔV is the change in volume
V_o is the original volume
β is the coefficient of volume expansion
ΔT is the temperature change in °C.

- - - - - - - - - -

90. The coefficient of volume expansion for petroleum is $8.99 \times 10^{-4}/°C$. If you put 20 gal of gasoline at 18°C (about 64°F) in your car and it sits in the sun until the temperature of the gasoline rises to 38°C (about 100°F), the gasoline will expand _____ gal.

- - - - - - - - - -

$\boxed{0.36 \text{ gal}}$, because $\Delta V = 20 \text{ gal} \times 8.99 \times 10^{-4}/°C \times \boxed{20°C}$

- - - - - - - - - -

91. While most of our discussion has been about the amount of expansion we may expect with a given temperature change, we need also to consider the amount of force that can be exerted by structural components of a reactor when they are in such a position that they cannot freely expand or contract with changes in temperature.

- - - - - - - - - -

92. The force that is exerted when a substance wants to expand or contract, and cannot, is called <u>thermal stress</u>.

- - - - - - - - - -

93. If a steel beam 10 ft long and 5 in.^{2} in cross section is fixed at each end and then its temperature is increased 200°C, it will try to expand _____ ft.

- - - - - - - - - -

94. If the beam cannot expand, the places where it is fixed must have exerted a force on the beam great enough to cause it to contract as much as it would like to expand. We will not ask you to calculate this force, but it would amount to about 250,000 lbs. 0.024

- - - - - - - - - -

95. Even if the beam in Frame 93 had had a temperature increase of only 5°C, the force necessary to keep it from expanding would be almost 4.5 tons.

- - - - - - - - - -

96. You have, undoubtedly, observed that when concrete highways are built, a cut is made through the concrete periodically for an expansion joint. This space is filled with a material that will allow the concrete to expand and relieve the thermal _____ caused by heating.

- - - - - - - - - -

97. It is interesting to note that both steel, a good structural material, and concrete, a good structural material, have the same coefficients of linear expansion. Thus we can use steel to reinforce concrete without fear that expansion or contraction of the steel will produce _____ _____ that will break the concrete.

stress

- - - - - - - - - -

1.6. Self Test

thermal stress

98. When oxidation is rapid enough to produce light and heat, the reaction is called _____. (If you made an incorrect response, repeat Frames 1-3.)

- - - - - - - - - -

99. You notice heat because it produces a change in the _____ of things which you touch. (If you made an incorrect response, repeat Frame 12.)

combustion or burning

- - - - - - - - - -

100. The temperature of a body is one measure of its _____ content. (If you made an incorrect response, repeat Frames 16-17.)

temperature

- - - - - - - - - -

101. The common temperature scale used in the United States is the _____ scale. (If you made an incorrect response, repeat Frame 20.)

heat

- - - - - - - - - -

102. The degree on the Fahrenheit scale represents a (smaller, larger) amount of temperature change than the degree on the Centigrade scale. (If you made an incorrect response, repeat Frames 22-26.)

Fahrenheit

- - - - - - - - - -

103. A temperature of 20°C is the equivalent of a temperature of _____°F. (If you made an incorrect response, repeat Frame 27.)

smaller

- - - - - - - - - -

104. In order to calculate the amount of heat (in Btu) absorbed by a body, we must know the weight of the body in _____, its specific heat, and the temperature change in _____ degrees. (If you made an incorrect response, repeat Frames 38-47.)

68

- - - - - - - - - -

105. How much heat must be added to a quart (about 2 lbs) of water at 60°F in order to raise its temperature to 200°F? (If you made an incorrect response, repeat Frames 47-50.)

pounds, Fahrenheit

- - - - - - - - - -

106. The thermal energy produced by nuclear reactors is normally measured in the unit _____-_____. (If you made an incorrect response, repeat Frame 58.)

280 Btu

- - - - - - - - - -

107. In order to calculate the thermal power of the ORR or the HFIR, the operator must know the flow rate of the coolant in the unit _____ per _____, the ΔT across the reactor core in _____ degrees, and a constant, 1.465×10^{-4}. (If you made an incorrect response, repeat Frames 71-74.)

Megawatt-day

- - - - - - - - - -

108. One of the effects of heating is that the heated body _____. (If you made an incorrect response, repeat Frame 76.)

gallons minute, Fahrenheit

- - - - - - - - - -

109. If a body is fixed in place so that it cannot expand or contract, the force it exerts when it tries to expand or contract is called _____ _____. (If you made an incorrect response, repeat Frame 92.)

expands

- - - - - - - - - -

thermal stress

SECTION IV-2

HEAT TRANSFER

In this section, we shall discuss some of the methods by which heat is transferred. Specifically, we wish to study heat transfer as it applies to the operation of nuclear reactors.

2.1. Sources of Heat

1. As was mentioned in Section IV-1, one of the most common sources of heat is the burning of some combustible material.

- - - - - - - - - -

2. Other sources of heat which might be thought of as being less common than combustion are electricity, friction, light (radiant energy), and nuclear energy.

- - - - - - - - - -

3. In order to understand how heat is produced by most of these methods, let us review the nature of matter.

- - - - - - - - - -

4. Matter is found in one of three forms. It is either a gas, a liquid, or a solid.

- - - - - - - - - -

5. The principal difference between the three forms of matter is the difference in distance between the particles (atoms or molecules) of which the matter is made.

- - - - - - - - - -

6. In a gas, the particles are relatively far apart, are moving at a high speed, and thus do not stay close to each other very long.

- - - - - - - - - -

7. The forces which could bind the molecules together are greatest at short range, so gases remain gaseous because of the distance between the molecules and the high _____ of the molecules.

speed

- - - - - - - - - -

8. The molecules of liquids are much closer together and are moving at slower speeds. The molecules of solids are so close together that bonds develop between them which hold them in rather definite positions, as illustrated in Fig. 2.1.

- - - - - - - - - -

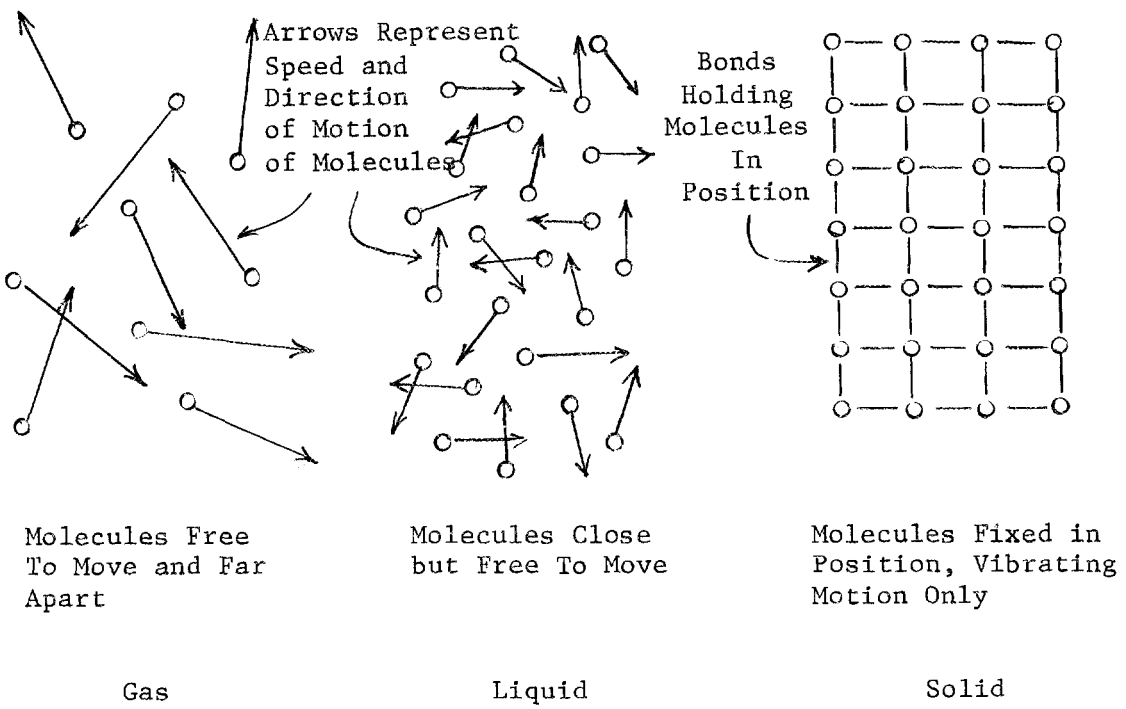

Fig. 2.1. Three Forms of Matter

- - - - - - - - - -

9. Physicists have found that heat is the factor that determines the form in which matter is found.

- - - - - - - - - -

10. As a substance absorbs heat, its molecules increase in speed and its temperature rises. If the substance loses heat, its molecular motion slows down and we notice the heat loss because it results in a _____ temperature.

- - - - - - - - - -

11. When the temperature of water drops to 32°F and then it loses more heat, bonds form between the water molecules and they are no longer as free to move as they are in a liquid. The water is now a _____ called ice. lower

- - - - - - - - - -

12. If, on the other hand, ice is heated, the bonds between the molecules break and the molecules can move freely. In this form, water is a _____. solid

- - - - - - - - - -

13. As water is heated, the thermal energy of the molecule is increased. One effect of this energy increase is the increased speed of the molecules, an effect that is observed as a temperature _____. liquid

- - - - - - - - - -

14. All of the molecules of a substance do not have the same speed. Actually, the temperature of a body is a measure of the average speed of its molecules. increase

- - - - - - - - - -

15. As the molecular speed increases, the average distance between molecules increases; and we say that the liquid has expanded.

- - - - - - - - -

16. The thermal expansion of a body can be explained if we accept the theory that when a body is heated, the average _____ of its molecules increases and they collide with each other more often which forces them farther apart.

- - - - - - - - -

17. As water is heated, some of its molecules achieve speeds great enough to allow them to break through the surface and leave the liquid. speed

- - - - - - - - -

18. Water molecules with speeds great enough to allow them to leave the liquid become lost from the liquid and form water vapor, in other words, a gas.

- - - - - - - - -

19. Evaporation is the loss of liquid when faster molecules, because of their greater _____, leave the liquid.

- - - - - - - - -

20. When water absorbs enough heat to give large numbers of molecules enough speed to break through the surface, the water boils. speed

- - - - - - - - -

21. When water is hot enough to boil, the molecules have enough thermal energy to remain in the form that we call water vapor, which is a _____.

- - - - - - - - -

22. These few examples illustrate that the amount of thermal energy contained in a body determines whether that body has the form called solid, liquid, or gas, and that the average speed of the molecules is a measure of the amount of thermal energy contained in that body. gas

- - - - - - - - - -

23. We might now define a heat source as anything which can act upon a body to cause the average speed of the molecules of that body to be _____.

- - - - - - - - - -

24. For example, if the sun shines into your car on a cold winter day, the radiant energy from the sun strikes the interior of the car and causes the molecules to increase their speed. Thus, the _____ of the interior of the car is increased. increased

- - - - - - - - - -

25. Radiant energy from the sun is a _____ source. temperature

- - - - - - - - - -

26. Hot coffee added to half a cup of lukewarm coffee causes the average speed of the molecules of lukewarm coffee to be increased. In this case, the _____ _____ is a heat source. heat

- - - - - - - - - -

27. When atoms of ^{235}U fission, the fission fragments are repelled at great speed. When these fission-fragment atoms strike other atoms, they increase the speeds of the atoms that they collide with, thus raising the average speed of all of the atoms. Fissioning ^{235}U, therefore, is a _____ source. hot coffee

- - - - - - - - - -

28. In the same way that radiant energy from the sun strikes objects and causes them to be heated, gamma radiation from either fissioning ^{235}U or from radiative decay causes increased molecular motion whenever it interacts with matter. Thus, we have the term "gamma heating". — heat

- - - - - - - - - -

29. Gamma radiation is a _____ of heat.

- - - - - - - - - -

30. Gamma heating is the increased molecular motion in a substance resulting from collisions of _____ rays with atoms or molecules of that substance. — source

- - - - - - - - - -

2.2. Heat Conduction

31. By our definition, anything is a heat source which causes the average molecular speed of a body to be _____. — gamma

- - - - - - - - - -

32. We used the example of pouring hot coffee into lukewarm coffee to raise its average molecular speed, which we observed as an increase in temperature. The hot coffee molecules transferred _____ energy to the cooler coffee molecules. — increased

- - - - - - - - - -

33. The heat exchange was effected when the hot coffee molecules collided with the cooler coffee molecules. The transfer of heat by molecular collisions is called heat conduction. — heat or thermal

- - - - - - - - - -

34. If a cook leaves a metal spoon in a container of boiling soup, in a few minutes the handle of the spoon is too hot to touch.

- - - - - - - - - -

35. The high-speed soup molecules collide with the metal molecules of the bowl of the spoon and cause them to speed up. The heat is transferred from the soup to the bowl of the spoon by _____.

- - - - - - - - - -

36. The faster moving molecules in the bowl of the spoon collide with the nearby molecules in the handle causing the heat to be gradually _____ to the molecules of the handle. conduction

- - - - - - - - - -

37. In a few minutes the handle of the spoon could become too hot to touch because heat is moved by _____ from the soup to the bowl of the spoon and from the bowl of the spoon to the handle of the spoon. transferred

- - - - - - - - - -

38. The ability of a substance to conduct heat seems to depend, in part, on its molecular structure. conduction

- - - - - - - - - -

39. Normally, the ability to conduct heat is highest for solids and lowest for gases, with liquids somewhere between.

- - - - - - - - - -

40. Most gases are good insulators (poor conductors), while many solids, especially metals, are _____ conductors.

- - - - - - - - - -

41. However, even among the solids there is a wide range in ability to conduct heat. Metals are good conductors, and many nonmetals such as wood, plastics, ceramics, and glass are poor conductors.

good

- - - - - - - - - -

42. Wooden handles are placed on many cooking utensils because wood is a _____ conductor of heat.

- - - - - - - - - -

43. Most gases, including air, are good insulators. If a substance is a good insulator, it is a poor _____.

poor

- - - - - - - - - -

44. Woolen clothes are good for winter wear because woolen cloth traps air in the weave. The entrapped air acts as a layer of _____ so that body heat is not easily _____ away.

conductor

- - - - - - - - - -

45. Heat is produced in the fuel of a reactor when the fuel atoms fission. In order to avoid a hazardous heat buildup, the fuel element is designed with a metallic cladding not only to protect the fuel but also to transfer the heat through the cladding and into the coolant. This heat transfer into the coolant is by _____.

insulation, conducted or transferred

- - - - - - - - - -

2.3. Heat Transfer by Convection

46. Another important method of heat transfer is convection, of which there are two kinds, natural convection and forced convection.

conduction

- - - - - - - - - -

47. Convection is the transfer of heat by a moving substance which absorbs heat from a source and then moves away carrying the heat with it.

- - - - - - - - - -

48. Natural convection is convection that is caused by the natural motion of a liquid or a gas when it is heated.

- - - - - - - - - -

49. To illustrate, when you strike a match, it burns steadily with most of the flame moving up from the matchstick. The flame heats the air, the air expands, becomes lighter, and floats up through the cooler air around it.

- - - - - - - - - -

50. The heated air moves up because that is the _____ motion for a material which is lighter than its surroundings.

- - - - - - - - - -

51. Many homes are heated, as shown in Fig. 2.2, by this natural method of heat transfer which we call _____ _____.

- - - - - - - - - -

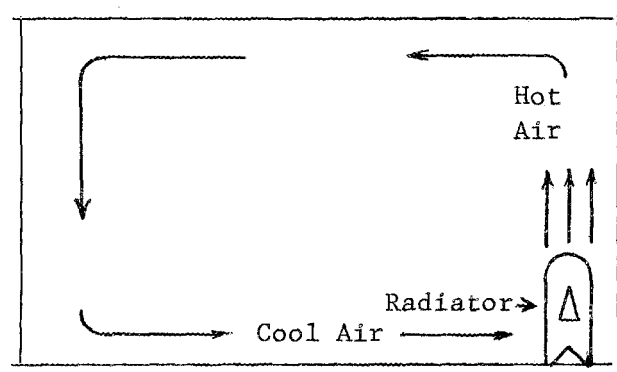

Fig. 2.2. Room Heating by Natural Convection Currents

- - - - - - - - - -

52. Most hot water heaters have the heat source near the bottom of the tank. The water near the bottom is heated and becomes lighter (less dense). The warmer, less _____, water floats to the top of the tank; and the cooler, more dense water moves down to become heated.

natural convection

- - - - - - - - - -

53. The convection of the _____ water upward and the _____ water downward forms a current called a _____ current.

dense

- - - - - - - - - -

54. The movement of smoke and heated air up a chimney is heat transfer caused by _____ _____.

warm, cool, convection

- - - - - - - - - -

55. Fuel elements in pool-type reactors have water-filled coolant channels between the fuel plates. This water is heated by conduction because it is in contact with the fuel plates. The heated water rises and carries the heat up and into the pool surrounding the core.

natural convection

- - - - - - - - - -

56. In the above case, the fuel elements are cooled by _____ convection.

- - - - - - - - - -

57. Forced convection is used to transfer heat when natural convection might move the heat in the wrong direction or might not move the heat fast enough.

natural

- - - - - - - - - -

58. When a liquid or gas is forced, by use of pumps or blowers, to carry heat away from a source, the transfer method is called _____ _____.

- - - - - - - - - -

59. If hot air is blown into a room through vents near the ceiling and cool air is removed through vents near the floor, the room is heated by _____ convection currents.

forced convection

- - - - - - - - - -

60. The convection currents in the room mentioned in Frame 59 (do, do not) move heat in the same direction as natural convection currents would.

forced

- - - - - - - - - -

61. The operation of an attic fan produces (forced, natural) convection currents which are in the (same, opposite) direction as natural convection currents.

do not

- - - - - - - - - -

62. When the amount of thermal energy produced by a reactor is low, as at the PCA, the cooling produced by natural convection is often sufficient.

forced, same

- - - - - - - - - -

63. At higher power levels (above 300 kw at the ORR), heat production is great enough that natural convection will not remove the heat fast enough.

- - - - - - - - - -

64. In reactors such as the ORR and the HFIR, operation at high power levels is dependent on heat _____ by forced convection.

- - - - - - - - - -

65. Although we have discussed conduction, natural convection, and forced convection separately, most heat transfer systems use combinations of conduction and both natural and forced convection.

transfer or removal

- - - - - - - - - -

66. If, for example, a room is heated by steam radiators, the steam usually moves from the boiler to the radiator because it is under pressure. This would be _____ convection.

- - - - - - - - - -

67. The hot steam molecules come in contact with the cooler radiator molecules and transfer their heat to the radiator by _____.

forced

- - - - - - - - - -

68. The hot metal of the radiator is in contact with cooler molecules of air. The air is heated by contact with the radiator and this, too, is heat _____ by conduction.

conduction

- - - - - - - - - -

69. As the air is heated, it becomes less dense and floats up, being displaced by cooler air which in turn is heated and moves up. The currents formed in the room, which eventually heat the whole room, are _____ convection currents.

transfer

- - - - - - - - - -

70. Most reactors require a coolant system in two parts. The primary system uses pumps to circulate the coolant through the reactor core and through heat exchangers which transfer the heat to a secondary system, an open system, where a cooling tower is used to transfer the heat to the air in which it is dissipated. A simple diagram of such a system is shown in Fig. 2.3. natural

- - - - - - - - - -

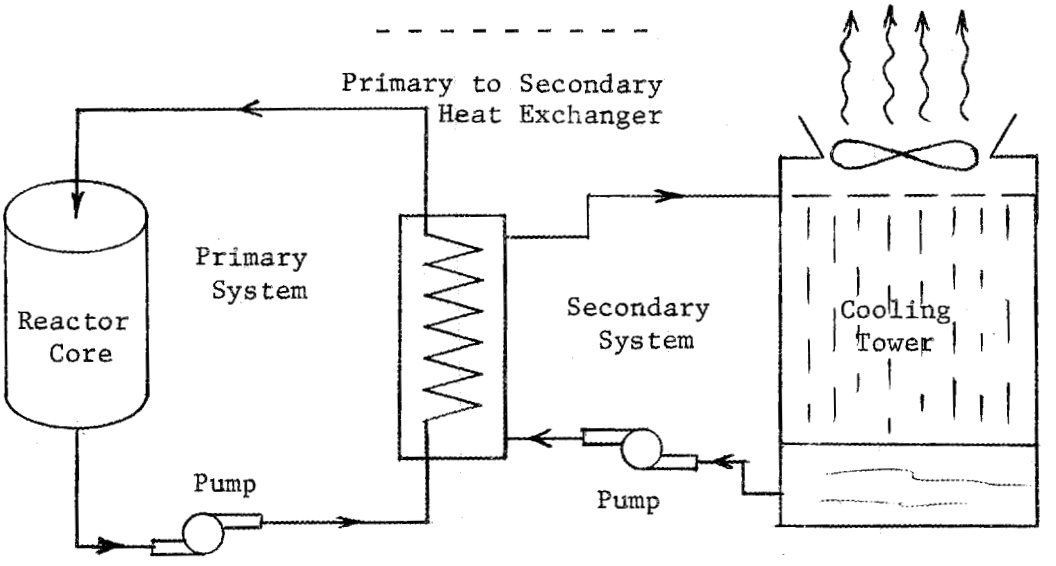

Fig. 2.3. Diagram of a Coolant System in Two Parts

- - - - - - - - - -

71. Here, too, all heat transfer methods are used. Heat produced by fissioning fuel atoms is transferred to the coolant by _____ because fission fragments heat the fuel, the fuel heats the cladding, and the cladding heats the coolant molecules which it touches.

- - - - - - - - - -

72. The coolant is pumped through the core, cooling it by _____ convection. conduction

- - - - - - - - - -

73. In the primary-to-secondary heat exchanger, the transfer is by conduction because of molecular contact, through the metal piping of the systems, of the hot primary coolant molecules with the cooler secondary coolant _____.

forced

- - - - - - - - -

74. In the heat exchanger, the molecules of the primary coolant (lose, gain) heat and the molecules of the secondary coolant (lose, gain) heat.

molecules

- - - - - - - - -

75. The pumps of the secondary system force the hot coolant to the top of a cooling tower where it is allowed to fall through rising currents of air.

lose,
gain

- - - - - - - - -

76. In the cooling tower, the water-to-air heat transfer is from molecules of water to molecules of air. This is transfer by _____.

- - - - - - - - -

77. In the cooling tower, the natural upward-rising currents caused by the heated air would not be enough to carry away the heat in the secondary system; so, large fans are used to move the air through the cooling tower.

conduction

- - - - - - - - -

78. So again, when it is necessary to move large amounts of heat quickly, _____ convection is a necessary part of the transfer system.

- - - - - - - - -

2.4. Self Test

79. Matter is found in one of three forms, a gas, a _____, or a _____. (If you made an incorrect response, repeat Frame 4.)

forced

- - - - - - - - - -

80. Molecules of matter in gaseous form are moving at (high, low) speeds. (If you made an incorrect response, repeat Frames 6-7.)

liquid, solid

- - - - - - - - - -

81. Molecules are closer together in liquids or solids. than in _____. (If you made an incorrect response, repeat Frame 8.)

high

- - - - - - - - - -

82. When a substance is heated, the thermal energy of its molecules increases. The effect of this thermal energy increase is observed as a _____ increase. (If you made an incorrect response, repeat Frame 13.)

gases

- - - - - - - - - -

83. When the faster molecules of a liquid are able to break through the surface of the liquid and get completely away, we call the effect loss of liquid by _____. (If you made an incorrect response, repeat Frames 18-19.)

temperature

- - - - - - - - - -

84. The average speed of the molecules of a body is a measure of the _____ energy contained in that body. (If you made an incorrect response, repeat Frames 22-23.)

evaporation

- - - - - - - - - -

85. Anything that can act upon a body to cause an increase in the average speed of the molecules of that body can be called a _____ source. (If you made an incorrect response, repeat Frame 23.) — thermal

- - - - - - - - - -

86. When fragments from fissioning atoms of ^{235}U strike other atoms, the collisions increase the average speed of all of the atoms. Therefore, fissioning ^{235}U is a source of _____. (If you made an incorrect response, repeat Frames 26-30.) — heat

- - - - - - - - - -

87. The transfer of heat by molecular collisions is called _____. (If you made an incorrect response, repeat Frame 33.) — heat

- - - - - - - - - -

88. Usually, gases are (better, poorer) conductors of heat than solids. (If you made an incorrect response, repeat Frame 39.) — conduction

- - - - - - - - - -

89. Among solids, metals are usually the (better, poorer) conductors. (If you made an incorrect response, repeat Frame 41.) — poorer

- - - - - - - - - -

90. A substance which is a very poor conductor of heat energy is called an _____. (If you made an incorrect response, repeat Frames 40-43.) — better

- - - - - - - - - -

91. If a substance absorbs heat from a source and then moves away from the source with the heat, the heat is transferred by _____. (If you made an incorrect response, repeat Frames 46-47.)

insulator

- - - - - - - - - -

92. If the carrier of the thermal energy is forced to move, as with a pump or blower, the heat-transfer is _____ convection. (If you made an incorrect response, repeat Frames 57-58.)

convection

- - - - - - - - - -

93. Smoke and heat from a campfire are carried upward by the natural motion of the air that is heated. This form of heat transfer is called _____ _____. (If you made an incorrect response, repeat Frames 48-50.)

forced

- - - - - - - - - -

94. Cooling a house with an attic fan is _____ convection cooling. (If you made an incorrect response, repeat Frame 61.)

natural convection

- - - - - - - - - -

95. In reactors such as the ORR and the HFIR, operation at high power levels is dependent on heat transfer by _____ _____. (If you made an incorrect response, repeat Frame 64.)

forced

- - - - - - - - - -

96. Most heating or cooling systems make use of (only one, one or two, all) heat-transfer methods. (If you made an incorrect response, repeat Frame 65.)

forced convection

- - - - - - - - - -

97. Heat transfer in a water-to-water heat exchanger is by _____. (If you made an incorrect response, repeat Frame 73.) — all

- - - - - - - - - -

98. When it is necessary to move large amounts of heat quickly, _____ convection is a necessary part of the transfer system. (If you made an incorrect response, repeat Frame 78.) — conduction

- - - - - - - - - -

forced

SECTION IV-3

FLUID MECHANICS

Fluids, which may be described as those substances which flow, are used in many ways in the control and operation of nuclear reactors. In this section we shall study the laws and principles which describe the actions of fluids under both static and dynamic conditions.

3.1. Hydraulic and Pneumatic Pressure

1. When a liquid exerts pressure, we call it a hydraulic pressure. The word hydro is a Greek word meaning water. However, the term hydraulic pressure has been used to indicate the pressure exerted by any liquid.

- - - - - - - - - -

2. The word pressure refers to a force being exerted on an area of unit size such as one square foot or one square inch.

- - - - - - - - - -

3. We usually measure pressure in pounds per square foot (lb/ft^2 or psf) or pounds per square inch ($lb/in.^2$ or psi).

- - - - - - - - - -

4. When pressure is exerted on a confined liquid, the pressure is transmitted by the liquid to all of the walls of the container, as shown in Fig. 3.1.

- - - - - - - - - -

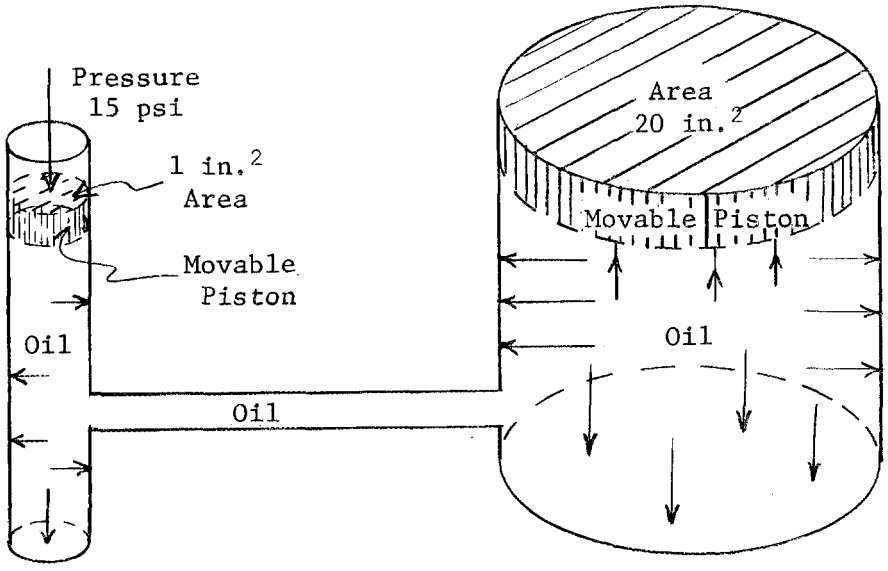

Fig. 3.1. Pressure Transfer by Use of a Liquid

- - - - - - - - - -

5. The pressure exerted on the walls in the small cylinder of Fig. 3.1 is the same as that on the small piston, _____ psi.

- - - - - - - - - -

6. The pressure exerted on the walls of the large cylinder of Fig. 3.1 is _____. 15

- - - - - - - - - -

7. The total force exerted on a surface is the pressure multiplied by the area, F = PA. So, if the area of the large piston is 20 in.^{2} and the pressure is 15 lb per each square inch, the total force exerted by the oil on the piston is 20 in.^{2} × 15 lb/in.^{2} 15 psi

- - - - - - - - - -

8. The hydraulic jack utilizes this principle in a manner similar to that illustrated by Fig. 3.1. A 15-lb "push" on the smaller piston will lift a 300-lb weight sitting on the larger piston. 300 lb

- - - - - - - - - -

9. Since the pressure on the small piston of the jack is transmitted to the large piston by the oil, the jack is called a _____ jack.

- - - - - - - - - -

10. Auto lifts (used in service stations to raise automobiles so that they can be serviced more easily) utilize the pressure exerted by oil on a main piston; they are called _____ lifts. hydraulic

- - - - - - - - - -

11. Probably the best known example of a hydraulic system is the braking system used on most automobiles. The pressure exerted on the brake pedal is transmitted, by way of the brake fluid (a liquid), to the pistons which force the fiber surfaces of the brake shoes against the rotating drums of the wheels. hydraulic

- - - - - - - - - -

12. The friction of the brake shoes against the brake drums causes the automobile to slow down. The system is called a hydraulic system because the pressure-transfer medium is _____.

- - - - - - - - - -

13. When a gas exerts pressure, we call it a pneumatic pressure. a liquid

- - - - - - - - - -

14. When drills, hammers, wrenches, motors, and other tools are operated by air pressure, we call them _____ tools.

- - - - - - - - - -

15. Many process instruments which measure pressures, flow rates, etc., use pneumatic lines to transmit the information to remote stations. — pneumatic

- - - - - - - - - -

16. Since the tires of automobiles, trucks, buses, and other vehicles are filled with air, they are called _____ tires.

- - - - - - - - - -

17. If you should measure the area in contact with the ground of each of your auto tires, you would probably find that each tire touches the ground in an area of about 32 in.^{2} (roughly 4 in. × 8 in.). — pneumatic

- - - - - - - - - -

18. If the air pressure in each tire is 30 lb/in. , the force exerted by each tire on the ground is

$$30 \text{ lb/in.}^2 \times 32 \text{ in.}^2 = _____ \text{ lb.}$$

- - - - - - - - - -

19. Since each of the four tires exerts a force of 960 lb against the ground, the weight of the car, in this case, is 4 times 960 lb or _____ lb. — 960

- - - - - - - - - -

20. The weight of an automobile is exactly equal to the _____ exerted by the tires on the ground. — 3840

- - - - - - - - - -

21. The force exerted by the tires on the ground, according to the equation F = PA, is the product of the air _____ in the tires and the _____ of the tires in contact with the ground. — force

- - - - - - - - - -

3.2. Static Pressure and Force

22. Pressures and forces can be either static or dynamic. The word static means that the material is not moving, it is at rest. — pressure, area

- - - - - - - - - -

23. Water is a fluid, and a bucket of water sitting on the floor is water in a _____ condition.

- - - - - - - - - -

24. The word dynamic usually has to do with things in motion. Water flowing through a pipe is water in a _____ condition. — static

- - - - - - - - - -

25. The condition of the air in the tires of a parked automobile is _____. — dynamic

- - - - - - - - - -

26. The condition of the air in a hurricane is described as _____. — static

- - - - - - - - - -

27. In order to see how pressures and forces in the static condition are related, let us build a swimming pool in your backyard. — dynamic

- - - - - - - - - -

28. We will build the pool 50 ft long, 30 ft wide, and an average of 4 ft deep. When we fill the pool, the force on the bottom of the pool will be the weight of the water.

- - - - - - - - - -

29. In this case, the concrete bottom of the pool must resist the static _____ of the water on it.

- - - - - - - - - -

30. The volume of water in the pool is 50 ft × 30 ft × 4 ft, which is 6000 ft^3. If each cubic foot weighs 62.4 lb, the concrete on the bottom of the pool must resist a force of 6000 ft^3 × 62.4 lb/ft^3, or _____ lb. (The pound is one of the units by which we measure force or weight.)

force or weight

- - - - - - - - - -

31. Since the water is not moving, it exerts a _____ force of 374,400 lb.

374,400

- - - - - - - - - -

32. The static force on the bottom of the pool is merely the _____ of the water in the pool.

static

- - - - - - - - - -

33. Weight or force, in the United States, is most commonly measured in the unit _____.

weight

- - - - - - - - - -

34. Most of you already know that <u>pressure</u> has a different unit of measure. In the United States, some common units of pressure are pounds per square inch (psi) and pounds per square foot (lb/ft^2 or psf).

pounds

- - - - - - - - - -

35. Pressure is often described as a force per unit area $P = \frac{F}{A}$. If the unit of area is the square inch, the pressure unit is _____.

- - - - - - - - - -

36. If the unit of area is the square foot, the pressure unit is _____. psi or $lb/in.^2$

- - - - - - - - - -

37. Since we already know the static force on the bottom of our pool, we can calculate the average static pressure by dividing the static force by the _____ of the bottom of the pool. lb/ft^2

- - - - - - - - - -

38. The area of the bottom of the pool, which is 50 ft × 30 ft × 4 ft deep, is the product of the length and the width, or _____ ft^2. area

- - - - - - - - - -

39. The average static pressure, in lb/ft^2, exerted by the water on the bottom of the pool can be calculated by the equation P = F/A. P = _____. 1500

- - - - - - - - - -

40. Since the water exerts this pressure while it is at rest, we call the pressure a _____ pressure. $249.6\ lb/ft^2$

- - - - - - - - - -

41. The only equation, thus far, that we have for pressure (P = F/A), is not as useful as another which we should develop from the equation P = F/A. static

- - - - - - - - - -

42. You may recall that in Frame 30 we multiplied the weight of a cubic foot of water (its density) by the total volume of water to find the static force it exerted.

- - - - - - - - - -

43. The force exerted by any substance at rest, because of its weight, is the product of its density and _____.

- - - - - - - - - -

44. If we use F for force, D for density, and V for volume, the equation for calculating force would be _____.

volume

- - - - - - - - - -

45. If we substitute DV for F in the equation P = F/A, we have P = DV/A. But <u>volume</u>, which is the length × width × height, divided by <u>area</u>, which is the length × width, gives a quotient which is <u>height</u>. If we use h for height, our new equation for pressure is P = Dh.

F = DV

- - - - - - - - - -

46. This means that we can calculate the static pressure of a fluid if we know the height (or depth) of the fluid and the _____.

- - - - - - - - - -

47. The static pressure exerted by any liquid against the bottom and sides of its container can be found by multiplying the _____ of the liquid by the _____ of the liquid.

density

- - - - - - - - - -

To determine the total force against the side of a container (swimming pool, tank, dam, etc.), we use the same equation F = PA. However, since the pressure is zero at the surface of the liquid and maximum at the greatest depth, we must use the <u>average</u> pressure in the pressure equation P = Dh. The equation thus becomes <u>average P</u> = D × <u>average depth</u>, and average depth is

$$\frac{\text{min} + \text{max}}{2}$$

or, in our case,

$$\frac{0 + h}{2} = \frac{h}{2} .$$

Thus,

$$\text{average } P = \frac{Dh}{2}$$

and the force exerted on the side of a container is

$$F_{side} = \frac{Dh}{2} \times A$$

or

$$F_{side} = \frac{PA}{2} .$$

- - - - - - - - - -

48. The depth of 5% caustic solution in an open tank is four ft. If the density of the caustic solution is 65.8 lb/ft^3, the pressure on the bottom of the tank is _____ lb/ft^2. — depth, density

- - - - - - - - - -

49. If you want pressure in pounds per $in.^2$ (psi), divide lb/ft^2 by 144 $in.^2/ft^2$. In the above problem, the pressure, in psi, on the bottom of the tank is 263.2 lb/ft^2 ÷ 144 $in.^2/ft$ which equals _____ psi. — 263.2

- - - - - - - - - -

3.3. Dynamic Pressures and Forces

50. As was stated earlier, dynamic forces are those forces which result from fluids in motion. 1.83

- - - - - - - - - -

51. The force that a river exerts against a boat to cause it to move downstream is a _____ force.

- - - - - - - - - -

52. Since the calculations of dynamic forces and pressures are much more complicated than the calculations of static forces and pressures, we shall mention only that dynamic forces are influenced by both the velocity and the density of the fluid. dynamic

- - - - - - - - - -

53. As the velocity of a fluid increases, the force that it exerts also _____.

- - - - - - - - - -

54. A dense material like mercury flowing in a pipe would produce (more, less) force on elbows, valves, etc., than a material like water flowing at the same velocity. increases

- - - - - - - - - -

55. Some reactor buildings, such as those housing the ORR and the HFIR, have dynamic containment; blowers are continuously removing the air from the building. This causes the pressure inside to be slightly less than the pressure outside so that air leaks into the building rather than out of it. more

- - - - - - - - - -

56. The inleakage is to insure that if the air inside should become contaminated, it would be cleaned by the air exhaust system and, because of the pressure difference between inside and outside, clean air would leak in rather than contaminated air leaking out.

- - - - - - - - - -

57. Such containment is called dynamic containment because the air is _____.

- - - - - - - - - -

58. Fluids in motion exert forces on whatever they collide with. If you have ever waded a swiftly moving stream, you know that the greater the velocity of the water the greater the _____ that it will exert.

moving or in motion

- - - - - - - - - -

59. While dynamic forces and pressures are sometimes difficult to calculate, once you have calculated one of them, the other is calculated in the same way that static forces or pressures are calculated. When you have calculated dynamic pressure, dynamic force is pressure times area. In equation form it is:

force

$$F = _____ \times _____ .$$

- - - - - - - - - -

60. For example, let us say that the wind blowing against the side of a car exerts a pressure of only 5 lb/ft^2. If the car is roughly 4 ft high and 15 ft long, the force exerted by the wind is F = PA = _____ lb.

$P \times A$

- - - - - - - - - -

61. The dynamic containment of the ORR produces a pressure difference between inside and outside of about 0.3 in. of water which is a pressure of about 0.011 psi. If a personnel door is 30 in. by 80 in., a person opening the door will need to exert a force of _____ lb to open the door. 300

- - - - - - - - - -

62. These forces have to do with the effects observed when the force is measured in the direction that the fluid is moving. 26.4

- - - - - - - - - -

63. There are also important forces exerted that are roughly perpendicular to the direction of fluid motion.

- - - - - - - - - -

64. The flow of a fluid in a pipe affects the force against the pipe wall as well as causing the force against valves, elbows, and other pipe fittings.

- - - - - - - - - -

65. It can be shown that if a pipe has a constriction such as that shown in Fig. 3.2, the pressure against the pipe wall decreases at the constriction because the <u>velocity</u> is <u>greater</u> there.

- - - - - - - - - -

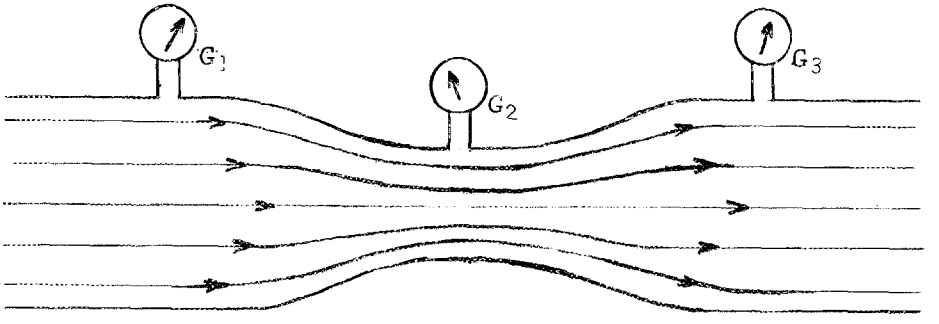

Fig. 3.2. Pressure Variation at a Constriction

- - - - - - - - - -

66. While the pressure at G_1 is a little larger than the pressure at G_3, the pressure at G_2 is less than at either G_1 or G_3 because the _____ of the fluid is greater at G_2.

- - - - - - - - - -

67. Since the velocity of the fluid in the pipe is greatest at G_2, the pressure at G_2 must be _____ than at G_1 or G_3.

velocity

- - - - - - - - - -

68. The principle illustrated in Fig. 3.2, known as Bernoulli's principle, is often used in flow-monitoring systems.

less

- - - - - - - - - -

69. Flow rate can be calculated by the equation

$$F = C \times \Delta h$$

where:

F is the flow rate,

C is a constant determined by the kind of fluid, the size of the pipe, and the size of the constriction, and

Δh is the difference in pressure caused by the change in fluid velocity at the constriction.

- - - - - - - - - -

70. Where there is a difference in fluid velocity along a pipe, a difference in _____ can be measured.

- - - - - - - - - -

71. A difference in fluid velocity can be produced in a pipe in two ways: (1) by the insertion of an orifice (an opening of a precisely determined size) between the flanges of a pipe, and (2) by the insertion of a venturi flow meter, shown in Fig's. 3.3 and 3.4, respectively. pressure

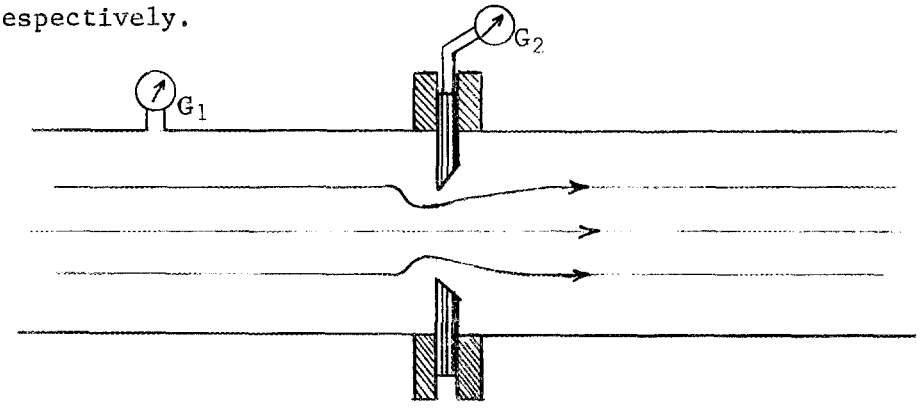

Fig. 3.3. Orifice Flow-Measuring Device

- - - - - - - - - -

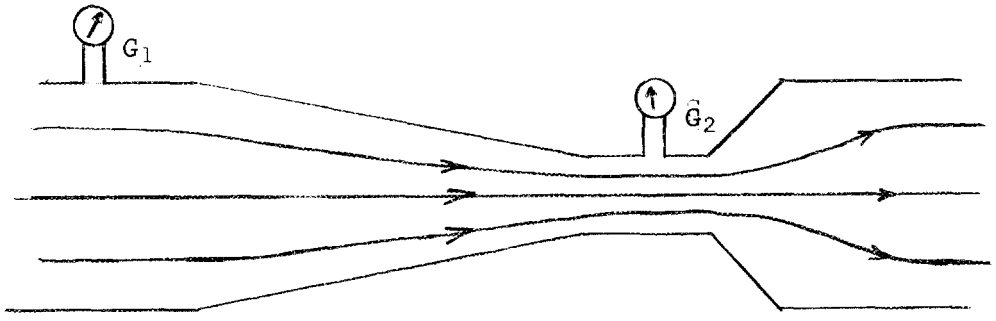

Fig. 3.4. A Venturi Flow Meter

- - - - - - - - - -

72. If a difference in pressure can be measured across an orifice or a venturi, the fluid _____ can be calculated.

- - - - - - - - - -

73. At both the ORR and the HFIR, orifices and venturis are used to measure water _____ rates in certain systems. velocity

- - - - - - - - - -

74. While both orifices and venturis are used for flow-rate measurements, the venturi allows smoother flow and, consequently, pumping power is less. Thus, a venturi is often used in a system where the use of an orifice for a flow detection would require a more powerful pump. flow

- - - - - - - - - -

75. Bernoulli's principle states that the force perpendicular to the pipe wall, exerted by a fluid flowing through a constriction, is greatest where the fluid velocity is (greatest, least) and least where the fluid velocity is (greatest, least).

- - - - - - - - - -

76. All forces caused by the motion of fluids are called _____ forces. least, greatest

- - - - - - - - - -

77. Dynamic forces produce stresses which, when they are caused by flowing liquids, are called _____ stresses. dynamic

- - - - - - - - - -

78. Excessive vibration of reactor components, resulting from hydraulic _____, may cause weakening or even failure of these components. hydraulic

- - - - - - - - - -

79. Thus far we have described the effects of moving fluids in terms of pressures and forces exerted both in the direction of motion and perpendicular to the direction of motion. stresses

- - - - - - - - - -

80. These pressures and forces must be considered in the design of any machine which uses a moving fluid as a heat-transfer agent.

- - - - - - - - - -

3.4. Laminar and Turbulent Flow

81. The efficiency of heat transfer from a pipe wall or fuel plate to the fluid coolant depends upon whether or not the flow is laminar or turbulent.

- - - - - - - - - -

82. Laminar flow is so called because there is very little mixing action caused by the motion.

- - - - - - - - - -

83. Turbulent flow causes much mixing action, as shown in Fig. 3.5.

- - - - - - - - - -

ORNL-DWG 63-170

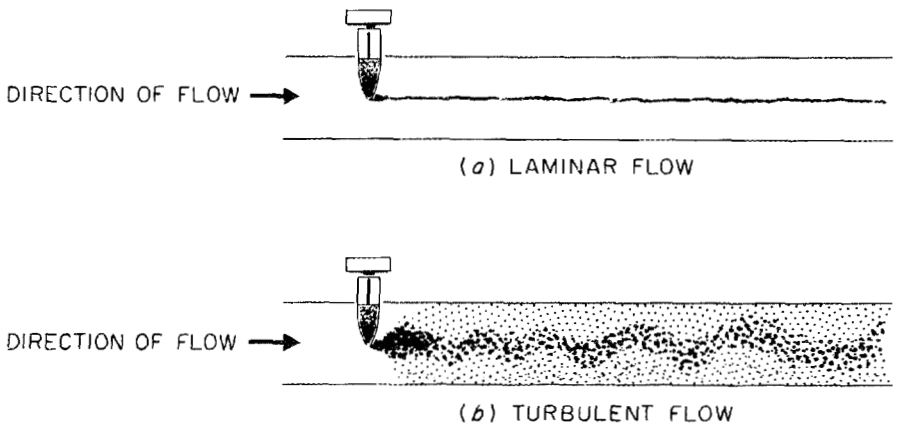

Fig. 3.5. Mixing of a Dye in Laminar and Turbulent Flow

84. Laminar flow is usually associated with slow moving fluids. Higher velocities tend to produce turbulence.

- - - - - - - - - -

85. Fluid flow that produces very little mixing is called _____ flow.

- - - - - - - - - -

86. Since natural convection currents usually move slowly, these currents usually produce _____ flow. laminar

- - - - - - - - - -

87. Smoke rising straight up from a chimney on a day when there is no wind is an example of laminar flow because there is _____ mixing with the air. laminar

- - - - - - - - - -

88. A river in flood stage is usually muddy because of the mixing action caused by the _____ flow. little or no

- - - - - - - - - -

89. If water flows swiftly in a pipe or other duct, the high velocity causes the flow to be _____. turbulent

- - - - - - - - - -

90. In order to better appreciate the heat transfer characteristics of laminar and turbulent flow, let us consider Fig. 3.6. turbulent

- - - - - - - - - -

ORNL-DWG 63-159

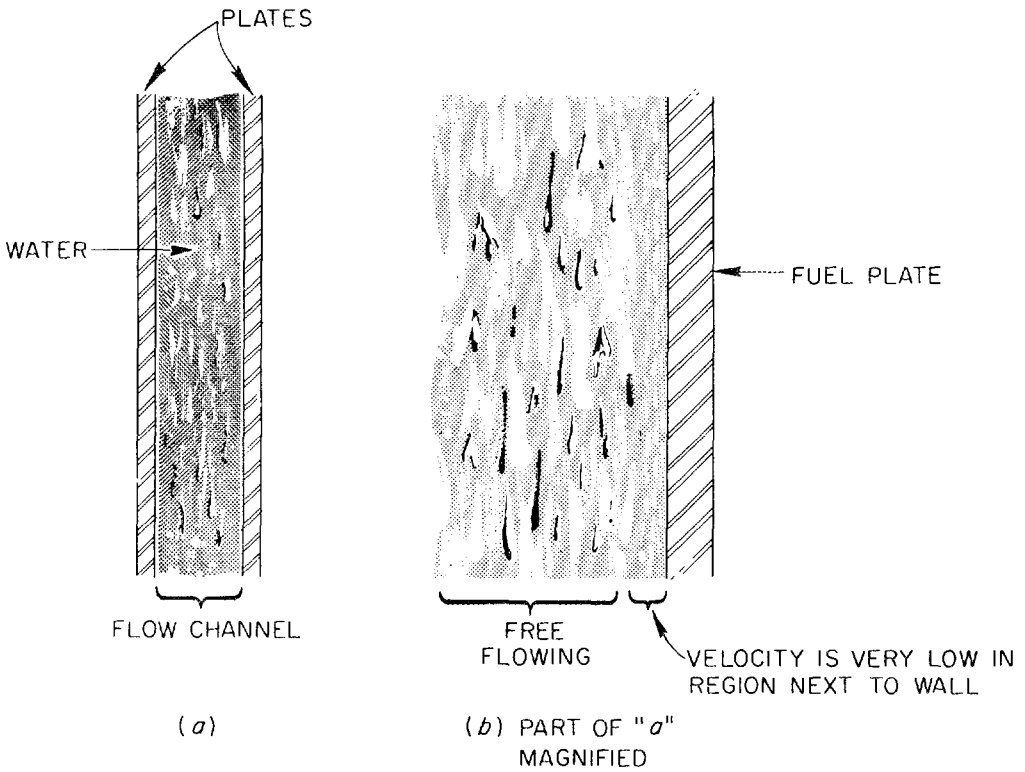

Fig. 3.6. Pattern of Flow Over a Surface

- - - - - - - - - -

91. When there is a laminar flow in a channel, the coolant velocity is very low in the region next to the duct wall. In this region of low velocity, the heat transfer to the faster moving coolant is slow.

- - - - - - - - - -

92. If the heat transfer from fuel plate to coolant is slow, the temperature in the fuel plate could be much higher than the temperature of the coolant.

- - - - - - - - - -

93. The cooling produced by laminar flow is not very efficient at least partially because of the (low, high) velocity of the fluid near the fuel plate.

- - - - - - - - - -

94. Even when there is turbulent flow in a coolant channel, the flow becomes laminar near the channel wall. However, the thickness of the laminar region becomes smaller as the turbulence in the center of the channel increases. low

- - - - - - - - - -

95. The velocity of the fluid in the central region of a pipe or other channel is (greater, less) than it is near the wall of the channel.

- - - - - - - - - -

96. Even when the coolant flow is turbulent in the central region of the channel, there is a thin film of fluid near the channel wall that has _____ flow. greater

- - - - - - - - - -

97. Since the removal of heat by the laminar film is slower than removal in the turbulent region, there is a considerable temperature change from the laminar film to the _____ fluid in the central coolant region. laminar

- - - - - - - - - -

98. The temperature of the coolant in the central portion of the coolant channel is sometimes called the <u>bulk</u> temperature. The temperature of the coolant in the portion near the channel wall is called the <u>film</u> temperature. turbulent

- - - - - - - - - -

99. When the heat is being transferred from the fuel to the coolant, the film temperature is _____ than the bulk temperature.

- - - - - - - - - -

100. If the film is thick, as in laminar flow, the heat transfer to the coolant in the central portion of the channel is slow and the film temperature may be much higher than the bulk temperature. This would cause (efficient, inefficient) cooling.

higher

- - - - - - - - - -

101. When the coolant flow is turbulent, the slow-moving film near the fuel plates becomes very thin and heat conduction through the film is much faster.

inefficient

- - - - - - - - - -

102. Since heat is moved from the surface of the fuel plate to the turbulent coolant much faster, heat buildup in the fuel plate is less and the temperature change from film to bulk temperature is _____.

- - - - - - - - - -

103. When the coolant flow is turbulent, heat transfer is (poorer, better) than when the coolant flow is laminar.

less

- - - - - - - - - -

3.5. Self Test

104.	A hydraulic pressure is a pressure exerted or transmitted by a _____. (If you made an incorrect response, repeat Frame 1.)	better
	- - - - - - - - - -	
105.	Pressure is defined as _____ per unit area. (If you made an incorrect response, repeat Frame 2.)	liquid
	- - - - - - - - - -	
106.	Hydraulic tubes at the ORR and at the HFIR use _____ pressure to insert and remove samples from the core. (If you made an incorrect response, repeat Frames 4-7.)	force
	- - - - - - - - - -	
107.	When air or another gas is used to operate a tool, the tool is said to be a _____ powered tool. (If you made an incorrect response, repeat Frames 13-15.)	water or hydraulic
	- - - - - - - - - -	
108.	A brick lying on the ground exerts a _____ pressure on the ground. (If you made an incorrect response, repeat Frames 22-23.)	pneumatically
	- - - - - - - - - -	
109.	The force exerted by the wind is an example of a _____ force. (If you made an incorrect response, repeat Frames 24-26.)	static
	- - - - - - - - - -	

110. The most common unit of force or weight used in the United States is the _____. (If you made an incorrect response, repeat Frames 33-34.)

dynamic

- - - - - - - - -

111. A rectangular tank is 20 ft long and 5 ft wide. If the depth of water in the tank is 10 ft and water has a density of 62.4 lb/ft^2, the static force on the bottom of the tank is _____ lb. (If you made an incorrect response, repeat Frames 30-37.)

pound

- - - - - - - - -

112. Calculate the pressure on the bottom of the above tank by use of the equation P = Dh. The pressure is _____. (If you made an incorrect response, repeat Frames 44-47.)

62,400

- - - - - - - - -

113. If you are measuring the force on the <u>side</u> of a container, you must use the _____ pressure in the calculation because the exact pressure varies from the top of the liquid to the bottom. (If you made an incorrect response, see the insert between Frames 47 and 48.)

624 lb/ft^2

- - - - - - - - -

114. When a fluid is flowing in a pipe, it exerts a force on valves, elbows, etc., that depends upon the _____ and also on the density of the fluid. (If you made an incorrect response, repeat Frame 52.)

average

- - - - - - - - -

115. Dynamic forces produce stresses which, when they are caused by flowing liquids, are called _____ stresses. (If you made an incorrect response, repeat Frames 76-78.)

velocity

- - - - - - - - - -

116. Smoke rising straight up from a fire on a day when the wind is calm is an illustration of (laminar, turbulent) flow. (If you made an incorrect response, repeat Frame 87.)

hydraulic

- - - - - - - - - -

117. Laminar flow produces (much, very little) mixing action within the fluid. (If you made an incorrect response, repeat Frames 83-87.)

laminar

- - - - - - - - - -

118. Turbulent flow is usually associated with (high, low) velocities. (If you made an incorrect response, repeat Frames 88-89.)

very little

- - - - - - - - - -

119. The region of low coolant velocity in a pipe is (larger, smaller) where the flow is laminar than where the flow is turbulent. (If you made an incorrect response, repeat Frame 94.)

high

- - - - - - - - - -

120. Heat transfer from fuel plate to coolant is more efficient when the coolant flow is (laminar, turbulent). (If you made an incorrect response, repeat Frames 101-103.)

larger

- - - - - - - - - -

turbulent

SECTION IV-4

HEAT PRODUCTION AND CONTROL IN NUCLEAR REACTORS

In order to better understand how to apply the principles of heat production and heat transfer to reactor coolant systems, we must consider how the heat is produced and the production rate, the heat flux, and the heat-transfer coefficients of the system. With this basic knowledge, we shall be able to clarify a few of the specific problems encountered by reactor operators.

4.1. Fission-Produced Heating

1. The thermal power level at which a nuclear reactor operates is defined by the rate at which heat is produced.

- - - - - - - - - -

2. While the reactor is operating, most of the heat (∿92.5%) is produced by the fissioning of fuel atoms.

- - - - - - - - - -

3. The heat produced by beta particles and gamma rays from decaying fission products amounts to only ∿6.5% of the total heat produced in an operating reactor. A lesser amount, ∿1%, results from the decay of induced radioactivity in structural materials in the reactor. These two heat sources will be discussed in a later section on "afterheat".

- - - - - - - - - -

4. The rate at which heat is produced in a nuclear reactor is called the thermal _____ level of the reactor.

- - - - - - - - - -

5. You may recall that in Section IV-1 (Frames 52 to 62) we discussed energy and power and said that power is energy per unit time. power

$$\text{Power} = \frac{\text{Energy}}{\text{Time}}$$

- - - - - - - - - -

6. We discussed power in terms of megawatts (Mw) and energy in terms of Btu because the Btu is a measure of thermal or _____ energy.

- - - - - - - - - -

7. In Sections 1 and 2 of Volume III, Reactor Physics, we discussed the relationship of power to the fission rate of the fuel atoms and now we can show that the terms <u>power</u>, <u>fission rate</u>, and <u>heat production rate</u> are closely related. heat

- - - - - - - - - -

8. Power is related to fission rate by the equation:

$$\text{Power (Mw)} = \frac{\text{atoms of } ^{235}\text{U} \times \sigma_f \times \phi}{3.2 \times 10^{10} \dfrac{\text{fissions}}{(\text{watt})(\text{sec})} \times 10^6 \dfrac{\text{watts}}{\text{Mw}}}$$

where:

<u>Atoms of ^{235}U</u> refers to the amount of fuel.
<u>σ_f</u> is the microscopic fission cross section in cm^2.
ϕ is the neutron flux in $n/(cm^2 \times sec)$.
<u>3.2×10^{10}</u> is the number of fissions per second per watt of power.

- - - - - - - - - -

9. The numerator, $^{235}U \times \sigma_f \times \phi$, is the number of atoms contained in any given amount of fuel that fission each second in the particular neutron flux represented by ϕ.

- - - - - - - - - -

10. Atoms of ^{235}U is calculated as follows:

$$\text{Atoms of } ^{235}U = \frac{\text{grams of } ^{235}U}{\text{atomic weight of } ^{235}U} \times 6.023 \times 10^{23} \text{ (Avogadro's Number)} .$$

With this substitution we could calculate the power level produced when a given number of grams of fuel is placed in a given neutron flux, ϕ.

- - - - - - - - - -

11. A "rule-of-thumb" is that if one gram of fuel fissions per day, the power level produced is roughly 10^6 watts or one _____.

- - - - - - - - - -

12. Let us check this "rule-of-thumb": There are 8.64×10^4 sec in a day. One gram of ^{235}U contains

Mw or megawatt

$$\frac{1}{235} \times 6.023 \times 10^{23} \simeq 2.56 \times 10^{21} \text{ atoms} .$$

If 2.56×10^{21} atoms of ^{235}U fission per day, then

$$\frac{2.56 \times 10^{21} \text{ fissions/day}}{8.64 \times 10^4 \text{ sec/day}} = 2.97 \times 10^{16} \text{ atoms fission per sec} .$$

Then

$$\frac{2.97 \times 10^{16} \text{ fissions/sec}}{3.2 \times 10^{10} \text{ fissions/(watt)(sec)}} = 0.925 \times 10^6 \text{ watts} \simeq 1 \text{ Mw.}$$

- - - - - - - - - -

13. So, you can see that the "rule-of-thumb" is not exact but can be used in making approximations.

- - - - - - - - - -

14. In order for the ORR to operate at a power level of 30 Mw, the burnup of ^{235}U must be, roughly, _____ grams per day.

- - - - - - - - - -

15. If we relate fuel burnup to heat produced, we must use the relationship: 30

$$3.41 \times 10^6 \frac{\text{Btu}}{\text{hr}} = 1 \text{ Mw} .$$

- - - - - - - - - -

16. Thus, if one gram of fuel fissions per day, it will produce heat at the rate of about 3.41 million _____.

- - - - - - - - - -

17. If we wish to make a rough calculation of the heat production of the ORR and we use the approximation of 30 grams per day fuel burnup that we mentioned in Frame 14, the heat production rate of the ORR is about _____ Btu/hr. Btu/hr

- - - - - - - - - -

100×10^6 Btu/hr because

$$\frac{3.41 \times 10^6 \text{ Btu}}{\text{hr} \cdot \text{Mw}} \times 30 \text{ Mw} = 102.3 \times 10^6 \text{ Btu/hr} .$$

- - - - - - - - - -

4.2. Temperature and Heat Transfer in Reactors

18. In order to increase the power level of a reactor, we must increase the rate at which _____ is produced.

- - - - - - - - - -

19. The heat production rate of a reactor depends on the number of fissions per second because most of the heat results from fission fragments hitting adjacent atoms and increasing their energy of motion (kinetic energy). heat

- - - - - - - - - -

20. You will recall that atoms in rapid motion can hit against surrounding atoms and increase their (the surrounding atoms') motion, thus increasing the average temperature of all. We called this heat-energy transfer by conduction.

- - - - - - - - - -

21. Thus, when atoms fission, the fission products hit against the surrounding fuel and structural-material atoms and the average temperature of the total core is increased by this production and transfer of _____.

- - - - - - - - - -

22. If the fission rate is constant, the heat production rate is _____. energy

- - - - - - - - - -

23. If the heat production rate is constant, and the temperature of the core is to remain constant, it is imperative that the heat removal system be adequate. It must remove heat at the same rate that the heat is produced.

constant

- - - - - - - - - -

24. The heat production rate and the heat removal rate must be the same if the _____ of the heat-producing system is to remain constant.

- - - - - - - - - -

25. The fuel temperature of a reactor will reach equilibrium when the power level is (greater than, less than, equal to) the heat removal rate.

temperature

- - - - - - - - - -

26. Now let us consider the causes of temperature changes in a reactor core. What can cause the fuel temperature to increase?

equal to

- - - - - - - - - -

27. A rather obvious cause of a temperature increase would be a power increase. If the heat production rate increases, the fuel _____ will increase.

- - - - - - - - - -

28. Actually, Frame 27 is rather simplified. If the heat production rate increases, the temperature of the coolant will also increase because it is moving more heat per unit volume. As has already been stated, the temperature of a substance is a measure of its _____ content.

temperature

- - - - - - - - - -

29. The fuel temperature will also increase until, at some higher temperature, the heat production rate and the heat removal rate will once more become _____. We say the system is again in equilibrium. heat

- - - - - - - - - -

30. A reactor coolant system is designed such that when the reactor is operating at the designed power level, the fuel _____ will not exceed a certain upper limit. equal

- - - - - - - - - -

31. Another cause of fuel temperature increase is a decrease in the heat removal efficiency. Such a decrease could be caused by either a change in the heat conduction properties of the system or a change in the rate of loss of heat to the coolant stream. temperature

- - - - - - - - - -

32. For example, fuel elements are usually clad with some metal to keep the fuel from contacting the coolant. If a low-heat-conducting coating should build up on the cladding, heat conduction would be less efficient and fuel temperature would _____.

- - - - - - - - - -

33. At the ORR and the HFIR, the coolant pH is kept at about 5 to minimize an oxide buildup on the aluminum cladding. This particular oxide has poorer heat-transfer properties than the aluminum and would cause an _____ in the fuel temperature. increase

- - - - - - - - - -

34. In another situation, let us say that while the reactor is operating at its design power level a fan motor in the cooling tower overheats and must be stopped. This will cause the inlet primary coolant temperature to increase.

increase

- - - - - - - - - -

35. If the power level of the reactor does not change, a chain of circumstances produces a higher fuel temperature.

- - - - - - - - - -

36. The inlet coolant temperature will be higher because less heat is dissipated in the cooling tower.

- - - - - - - - - -

37. The coolant will try to remove as much heat as before, and its outlet temperature will rise.

- - - - - - - - - -

38. Heat conduction from the fuel will become less for a short time because of the higher temperature of the coolant and the heat residue in the fuel will cause its temperature to _____.

- - - - - - - - - -

39. The temperature of both the coolant and the fuel will change until new temperatures are reached at which, once again, heat removal equals heat production. The system reaches a new state of _____.

rise

- - - - - - - - - -

40. In the above case, the transient heat-transfer imbalance (until the new equilibrium was reached) was caused by the increase in the coolant _____ temperature.

balance or equilibrium

- - - - - - - - - -

41. A similar situation could be caused by loss of coolant velocity. If the coolant velocity is reduced, its average temperature increases and again the fuel temperature _____. inlet

- - - - - - - - - -

42. The most obvious way to cope with each of the above problems is to reduce the amount of heat produced by lowering the reactor power level. increases

- - - - - - - - - - -

43. At the ORR, if the coolant flow drops from 18,000 gpm to 17,000 gpm, the instrumentation is programmed to reduce the power to less than 60% of full power.

- - - - - - - - - -

44. Such a reduction in power allows operation of the reactor below the maximum design fuel temperature even with a lower coolant flow rate.

- - - - - - - - - -

45. Before we study the factors that influence the setting of maximum and minimum operating temperatures, coolant flow rates, and other parameters, we need to define a few more heat-transfer terms.

- - - - - - - - - -

4.3. Heat Transfer Rates

46. You will recall that earlier in this study we determined that the amount of heat (Q) either absorbed or given out (radiated) by a body can be measured if we know the amount of material (m) in the body, its specific heat (c), and the temperature change (ΔT) resulting from the heat exchange

$$Q = mc\Delta T \ .$$

- - - - - - - - - -

47. The <u>rate</u> at which heat (Q) can be either absorbed by or removed from a body is our next consideration.

- - - - - - - - - -

48. It is rather obvious that the rate at which heat can be removed from a small radiator is not as great as the rate at which it can be removed from a large radiator. We define <u>heat flux</u> as the rate of heat flow through a surface of <u>unit area</u>.

- - - - - - - - - -

49. The heat flux of your car's radiator is a measure of the speed with which heat is _____ from the radiator.

- - - - - - - - - -

50. The symbol for heat flux is the Greek letter ϕ (pronounced fee). Heat flux is a measure of the rate at which a body can either absorb or radiate heat through a surface of _____ area.

removed

- - - - - - - - - -

51. The equation for calculating heat flux is:

unit

$$\phi = \frac{Q}{tA}$$

where:

Q has the unit Btu
t is time, usually in hours
A is the area of the surface, usually in ft^2 .

- - - - - - - - - -

52. Using the dimensions in the above frame, heat flux has the dimensions:

$$\frac{\text{Btu}}{\text{hr} \cdot \text{ft}^2}.$$

- - - - - - - - - -

53. If 5,000 Btu are removed each minute from a metal container of hot water which has a surface area of 100 ft^2,

$$\phi = \underline{\quad\quad} \frac{\text{Btu}}{\text{hr} \cdot \text{ft}^2}.$$

- - - - - - - - - -

54. If a heat exchanger transfers 2,000 Btu of heat from a primary coolant system to a secondary coolant system each minute, _____ Btu will be transferred per hour. 3,000

- - - - - - - - - -

55. If the surface area of the pipes in the above heat exchanger is 1,000 ft^2, ϕ of the heat exchanger is ____ $\frac{\text{Btu}}{\text{hr} \cdot \text{ft}^2}$. 120,000

- - - - - - - - - -

$$\boxed{\phi = 120, \text{ because } \frac{120{,}000 \text{ Btu}}{\text{hr} \cdot 1000 \text{ ft}^2} = 120 \frac{\text{Btu}}{\text{hr} \cdot \text{ft}^2}}$$

- - - - - - - - - -

56. Let us assume that a reactor core is composed of 20 fuel elements, each of which has a surface area of 40 ft^2. If heat is transferred to the coolant at the rate of $1.36 \times 10^8 \frac{\text{Btu}}{\text{hr}}$, the average heat flux of the reactor core is _____.

- - - - - - - - - -

57. Heat flux is a measure of how fast heat is moved through a surface of unit area, but it tells us nothing about <u>why</u> the heat transfer rate is large or small in any given situation.

$1.7 \times 10^5 \frac{\text{Btu}}{\text{hr} \cdot \text{ft}^2}$

- - - - - - - - - -

58. The "why" in the above frame may be answered when we know the meanings of the terms <u>surface temperature</u> and <u>bulk temperature</u>.

- - - - - - - - - -

59. "Surface temperature" is the temperature at the surface of the heat source. For example, when handling a bowl of hot food, you feel the temperature at the bowl _____.

- - - - - - - - - -

60. The surface temperature normally <u>is not</u> the same as the internal temperature of the heat source.

surface

- - - - - - - - - -

61. If we use a reactor as an example, the temperature of the fuel plate, where it contacts the coolant, would be the _____ temperature.

- - - - - - - - - -

62. The internal temperature of the fuel might be many degrees higher than the surface temperature of the fuel plate.

surface

- - - - - - - - - -

63. The term <u>bulk temperature</u> means the temperature one would measure if a thermometer were immersed in the center of the coolant stream.

- - - - - - - - - -

64. The film temperature is the temperature of the slow-moving film of coolant near the surface of the coolant duct.

- - - - - - - - - -

65. The ducts through which a reactor coolant flows are the channels between fuel plates. The temperature of the coolant near the surface of a fuel plate is called the _____ temperature.

- - - - - - - - - -

66. Because of the proximity of the coolant film to the duct surface and also because it moves slowly, the film temperature is higher than the coolant _____ temperature. film

- - - - - - - - - -

67. As a basis for our discussion of heat transfer coefficient, let us say that, for a given coolant velocity in a given system, the heat that can be removed, for each °F of difference between the surface temperature and the bulk temperature, is a constant. bulk

- - - - - - - - - -

68. This means that there is a constant amount of heat being transferred per °F difference between surface and bulk temperatures for a given _____ of coolant.

- - - - - - - - - -

69. Many engineers use the letter "h" to represent this constant and call it the "heat transfer _____". velocity

- - - - - - - - - -

The following mathematics is just to derive some equations that we may be able to use to advantage. We can write what we said in the above frames in equation form as:

$$h = \frac{Q}{t \cdot A \cdot \Delta T} .$$

This equation says that the heat transfer coefficient (h) is the heat transferred per hour (t) through a unit area (ft^2) for each °F of temperature difference between T surface and T bulk ($T_s - T_b$ or ΔT). Since

$$\phi = \frac{Q}{t \cdot A} ,$$

then

$$h = \frac{\phi}{(T_s - T_b)} .$$

If you wish to know the surface temperature when h, ϕ, and T_b are known, the equation is merely rearranged as:

$$T_s = \frac{\phi}{h} + T_b .$$

- - - - - - - - - -

70. The heat transfer coefficient for any system is a constant that is determined experimentally. However, after h has been determined, it may be used in a variety of ways to determine other characteristics of the system. coefficient

- - - - - - - - - -

71. For example, suppose that by experiment you have determined that h for a certain system is

$$10{,}000 \frac{\text{Btu}}{\text{hr} \cdot \text{ft}^2 \cdot {}^\circ\text{F}} .$$

Then, when the heat flux is $200{,}000 \frac{\text{Btu}}{\text{hr} \cdot \text{ft}^2}$ and the bulk temperature of the coolant is 130°F, you can determine that the surface temperature of the heat source is _____°F.

- - - - - - - - - -

$$\boxed{150^\circ\text{F, because } T_s = \frac{200{,}000}{10{,}000} + 130^\circ\text{F} = 150^\circ\text{F} .}$$

- - - - - - - - - -

4.4. Determination of Operating Parameters

72. There is no fixed rule for the determination of maximum or minimum temperatures allowed during the operation of all reactors. However, there are some general criteria which influence the arbitrary selection of these temperatures.

- - - - - - - - - -

73. For heating systems in general (we could use your automobile engine for an example), the cooling system is designed to remove heat at such a rate that the maximum temperature allowable will not be exceeded at the maximum heating rate.

- - - - - - - - - -

74. This means that, with a new car, in hot summer weather, and with high fuel consumption (high speeds), the engine temperature should not exceed the _____ limit.

- - - - - - - - - -

75. If any of the coolant-system conditions should change, such as when driving in bumper-to-bumper traffic where the airflow through the radiator is lower, a new set of equilibrium conditions will be set up.

design or maximum

- - - - - - - - - -

76. Lower air flow through the radiator results in a smaller volume of air trying to remove the same amount of heat from the radiator. The air contains more heat per unit volume and its average temperature is _____.

- - - - - - - - - -

77. The temperature of the radiator surface increases because the heat flux (Btu/hr · ft^2) has not changed but the air temperature is higher, making the ΔT (from radiator surface to the air) lower, until the radiator surface temperature is high enough for the heat being brought to the radiator by the coolant to be dissipated into the air as fast as it was before the air-flow loss.

higher or increased

- - - - - - - - - -

78. As a result of the air temperature increase and the radiator surface temperature increase, the radiator-to-air ΔT is re-established at a higher level, producing a new set of _____ conditions for the heat transfer.

- - - - - - - - - -

79. This same line of reasoning may be continued to show that, as the radiator surface temperature rises, the coolant temperature must rise because it leaves the radiator at a higher temperature than before.

equilibrium

- - - - - - - - - -

80. While the new equilibrium conditions (coolant to radiator) are being produced, the heat load remaining in the coolant leaving the radiator is higher causing its temperature to _____.

- - - - - - - - -

81. The coolant temperature will increase until, at some new ΔT, the amount of heat removed by the radiator is _____ to the amount of heat brought to the radiator by the coolant. increase

- - - - - - - - -

82. While the coolant temperature is rising, there will be an interval of time during which the ΔT from the engine to the coolant will become (more, less). equal

- - - - - - - - -

83. The temporarily lower ΔT (engine to coolant) will allow less heat to be removed from the engine and its temperature will _____ until the original ΔT (engine to coolant) is re-established with the engine temperature at some higher level. less

- - - - - - - - -

84. The above example illustrates a situation that may happen often but is a serious problem only when the final equilibrium conditions result in maximum coolant and engine temperatures too high for proper operation of the engine. increase

- - - - - - - - -

85. Low air flow through the radiator was the cause; the effect was increased temperatures of the air, radiator surface, coolant, and engine. In all cases a maximum temperature was reached when the ΔT was such that the heat removed by the cooling system was exactly equal to the heat _____ by the engine.

- - - - - - - - - -

86. Usually, cooling systems for automobile engines are designed to remove heat at the maximum heat producing rate of the engine. — generated or produced

- - - - - - - - - -

87. With nuclear reactors, such a design is not possible. The maximum possible heat production rate of a reactor is many times greater than the heat _____ rate of the coolant system.

- - - - - - - - - -

88. It would be difficult, if not impossible, to design a cooling system to remove heat from a nuclear reactor at its _____ possible heating rate. — removal

- - - - - - - - - -

89. When nuclear reactors are designed, the first decision to be made is what the maximum allowable heating rate (power level) will be. Then the cooling system is designed to dispose of all heat produced at that maximum _____ power level. — maximum

- - - - - - - - - -

90. The maximum allowable power level is chosen such that the reactor fuel and fuel cladding will not be damaged by reaching maximum temperatures that are too high. — allowable or design

- - - - - - - - - -

91. In order to adequately control a reactor, we must use fast-acting neutron-sensitive control systems (safety systems) to limit the fission rate (heat production rate) to such a level that the maximum _____ fuel temperature will not be exceeded.

- - - - - - - - -

92. It is difficult, if not impossible, to measure internal fuel temperatures routinely, so we must use indirect measures and calculations for the fuel and fuel cladding temperatures. allowable

- - - - - - - - -

93. We can measure such parameters as bulk inlet and outlet coolant temperatures; and, by knowing the heat conduction properties of the fuel and fuel cladding as well as the heat transfer coefficient from the cladding to the coolant, we can _____ the internal fuel temperature.

- - - - - - - - -

94. If we design a cooling system to maintain predetermined bulk inlet and outlet coolant temperatures, we can safely assume that the internal _____ temperatures will not exceed the desired level. calculate

- - - - - - - - -

95. The parameters we measure are inlet and outlet bulk coolant temperatures and the coolant flow rate. The power level of the reactor may be calculated when we know the ΔT across the core and the coolant flow rate. fuel

- - - - - - - - -

96. If only cooling aspects are considered, the allowable inlet temperature can vary considerably; but we try to keep it above the freezing point and high enough to minimize thermal cycling of structural parts. Thermal cycling causes expansion and contraction which, in turn, causes repeated bending, leading to possible failure of these parts.

- - - - - - - - - -

97. Other than to prevent freezing, when the coolant is water, there is no physical reason to keep the inlet temperature above ambient (room temperature) except to minimize _____ cycling.

- - - - - - - - - -

98. In many cases, the ΔT between the inlet and outlet coolant is a control parameter. Then the inlet temperature must be kept constant to prevent the false indication of high power level which would occur if the inlet temperature should drop and cause ΔT to increase.

thermal

- - - - - - - - - -

99. The ΔT across the reactor core can be increased in either of two ways. A drop in the inlet temperature, as mentioned in Frame 98, produces only a <u>transient</u> (not lasting) effect on the ΔT.

- - - - - - - - - -

100. When a mass of cooler water arrives at the inlet coolant monitor, the temperature there drops while the temperature at the outlet monitor does not change. Thus, the ΔT across the reactor core is _____.

- - - - - - - - - -

101. As the cooler water passes through the reactor, it can absorb only the amount of heat produced by the core; and thus its temperature can rise only an amount equal to the ΔT before the cool water was introduced into the system. (The heat content gained per unit volume of water does not change.) larger

- - - - - - - - - -

102. The ΔT in the above illustration is larger only until the cooler mass of water can reach the outlet monitor. For this reason, the effect is said to be a _____ effect.

- - - - - - - - - -

103. The second way to raise the ΔT is to raise the power level of the reactor. This increase in ΔT is not a transient effect unless the power increase is transient. transient

- - - - - - - - - -

104. When the power level of the reactor is raised, more heat is produced in the core and more heat is transferred to the coolant, increasing its heat load.

- - - - - - - - - -

105. The outlet temperature of the coolant will increase because the heat load of the coolant has _____.

- - - - - - - - - -

106. The ΔT will increase until a new value of ΔT is reached where the heat production rate and the heat removal rate are equal. increased

- - - - - - - - - -

107. There are three principal bases for choosing an upper limit for the outlet temperature.

   a. To prevent boiling.
   b. To protect the system from high temperature damage.
   c. To limit the internal temperature of the fuel elements.

   Any one or all three may be used as a base for choosing this upper limit.

- - - - - - - - - -

108. Boiling can be both an asset and a hazard depending on its effect on heat conduction at the coolant-cladding surface interface.

- - - - - - - - - -

109. You will recall that turbulence in the coolant stream produces more effective cooling than laminar flow and that, as turbulence becomes greater, the thickness of the laminar stream near the cladding surface becomes less.

- - - - - - - - - -

110. There is a form of boiling called <u>nucleate</u> boiling where small bubbles of steam continuously form and collapse around tiny particles of solids and gases that adhere to the cladding surface.

- - - - - - - - - -

111. This nucleate boiling helps to destroy the laminar flow of the film and increases turbulence, thereby (increasing, decreasing) the heat transfer to the coolant.

- - - - - - - - - -

112. Nucleate boiling helps the heat transfer because it both breaks up the laminar film and increases _____ in the main coolant stream. — increasing

- - - - - - - - - -

113. However, the change in temperature at the cladding surface, necessary to cause the nucleate bubbles to coalesce into a film of steam, is rather small. — turbulence

- - - - - - - - - -

114. Since steam is a gas, it is a much poorer conductor of heat than a liquid. Where films of steam form, heat transfer (increases, decreases) considerably.

- - - - - - - - - -

115. Although nucleate boiling is an asset, a slightly higher temperature may produce films of steam on the cladding which decrease heat _____. — decreases

- - - - - - - - - -

116. The loss of heat transfer caused by film boiling can be great enough to cause internal fuel temperatures to reach the melting point of the fuel, a definite hazard to the reactor. — transfer or conduction

- - - - - - - - - -

117. Thus, although nucleate boiling might be considered an asset, film boiling is a _____ to the operation of reactors such as the ORR and HFIR.

- - - - - - - - - -

118. The upper limit for the outlet temperature, then, may be set to prevent the onset of _____ boiling. — hazard

- - - - - - - - - -

119. When we speak of the need to prevent high-temperature damage (other than melting), we usually are concerned about damage such as corrosion or thermal cycling of structural materials. film

- - - - - - - - - -

120. Since corrosion is, at least partially, a chemical reaction and reaction speed increases as temperature increases, the speed with which corrosion can damage structural materials at high temperatures is greatly _____.

- - - - - - - - - -

121. Aluminum is extensively used as a fuel cladding material because of its desirable properties, especially at lower temperatures. However, at elevated temperatures, 400°F and above, aluminum is attacked by water and also it begins to lose structural strength. increased

- - - - - - - - - -

122. Thus, where aluminum is used, either as a cladding or as a structural material, elevated temperatures can greatly speed up the _____ of the metal.

- - - - - - - - - -

123. At temperatures above 400°F, aluminum begins to lose much of its _____ strength. corrosion

- - - - - - - - - -

124. Although boiling might be more of a hazard than corrosion attack when the boiling point is at 212°F; with pressurized systems such as that at the HFIR, the boiling point might be high enough to be of lesser importance than other considerations such as thermal cycling or _____ of the structural materials.

structural

- - - - - - - - - -

125. The third reason that we mentioned, for limiting the outlet coolant temperature, was to limit the internal fuel temperature.

strength or corrosion

- - - - - - - - - -

126. The fact that fissioning ^{235}U is a source of heat has been discussed earlier and need not be continued here. Our principal consideration is that there be no hot spots within fuel elements at or above the melting point.

- - - - - - - - - -

127. A hot spot is a point in the fuel plate where the temperature is higher than the average fuel-plate temperature.

- - - - - - - - - - -

128. A localized high fission rate, possibly caused by non-uniform fuel distribution, could produce a localized high temperature and thus be responsible for a _____ _____.

- - - - - - - - - -

129. Even with a uniform distribution of fuel, a peaking of the neutron flux, caused by a dropped control rod in another region or an experiment rig located near the element, could cause a higher heat production rate and a _____ _____ to develop. hot spot

- - - - - - - - - -

130. Thus, we need to keep the coolant temperature low enough and to operate the reactor at a low enough power level that the maximum hot-spot temperature will not constitute a hazard. hot spot

- - - - - - - - - -

131. Another reason for limiting internal fuel temperatures is to minimize the possibility of a rupture of the fuel-element cladding from the pressure of fission-produced gases.

- - - - - - - - - -

132. High fuel temperature could cause the fuel cladding to _____ from increased gas pressure.

- - - - - - - - - -

133. Any one or all of these reasons are sufficient to illustrate the importance of assigning an upper limit for the outlet coolant _____. rupture

- - - - - - - - - -

4.5. Afterheat

134. The term afterheat refers to the heat generated by the decay of fission products and radioactive atoms in structural materials and by some fissioning that continues after the reactor is shut down due to the neutron-producing reaction of high-energy gamma photons with various materials in the reactor. This latter source of heat is usually unimportant. temperature

- - - - - - - - -

During the first few seconds after shutdown, a significant amount of fissioning continues, caused by the delayed neutrons. These, however, decay away with an average half life of about 8.7 sec. Other short-lived fission products, particularly ^{24}Na [from ^{27}Al (n,α) ^{24}Na], emit gamma photons with high enough energies to knock neutrons out of such light-weight atoms as Be, in reflectors, D, in water, B, in control rods, and others. These neutrons cause fission just as any other neutrons do; however, the amount of heat produced by these fission reactions is insignificant when compared to the heat produced by the decay of fission products and radioactive atoms in structural materials.

- - - - - - - - -

135. Most of the atoms produced when ^{235}U fissions are themselves radioactive and most of them produce both beta particles and gamma radiation as they decay.

- - - - - - - - -

136. The beta particles, though they are quite energetic, lose most of their energy through collisions in the core.

- - - - - - - - -

137. The range of beta particles keeps most of them in the core. Thus, most of the afterheat generated within the reactor core is caused by collisions of these _____ particles with the materials of the core.

- - - - - - - - - -

138. Since gamma radiation is uncharged, it can penetrate deeper into the reactor structure surrounding the core. It is responsible for <u>some</u> of the heating in the fuel and <u>most</u> of the heating outside of the core. beta

- - - - - - - - - -

139. A significant amount of the afterheat generated in the reactor structural components is the result of _____ heating.

- - - - - - - - - -

140. A significant part of the afterheat produced in the reactor fuel and fuel cladding is caused by beta particles released when fission products _____. gamma

- - - - - - - - - -

141. Heat produced in the reactor components after the reactor is shut down is called _____. decay

- - - - - - - - - -

142. Most of the afterheat is caused by fission-product _____ and diminishes as the shorter half-life products either decay to stable atoms or decay to long half-lived radioisotopes. afterheat

- - - - - - - - - -

143. Most of the heating is caused by _____ particles and _____ radiation which are released when the fission products decay. — decay

- - - - - - - - -

144. The problem is that the heating is great enough to cause serious overheating in the fuel and other reactor components if cooling is discontinued immediately at shutdown. — beta, gamma

- - - - - - - - -

145. A fuel meltdown is possible if adequate _____ is not provided to remove this afterheat.

- - - - - - - - -

146. The usual solution to the problem, under normal operating conditions, is to operate the coolant system at full flow for some time after shutdown although the flow could safely be reduced to about 10% of full flow. — cooling

- - - - - - - - -

147. For example, after a normal shutdown at the ORR, the coolant is kept at full flow for at least 30 minutes. During this interval, heat removal is maximum and heat generation declines as the fission-product decay rate (increases, decreases, remains constant) as the short-lived radioactive fission products decay away.

- - - - - - - - -

148. After about 30 minutes of cooling at full coolant flow, the afterheat generation has decreased to such a level that the primary pumps can be shut off. The shutdown pump (1000 gpm) then produces enough coolant flow to remove any additional _____. — decreases

- - - - - - - - - -

149. If the reactor shutdown is due to an electrical power outage, elaborate back-up systems (diesel-powered generators or even batteries) are used to power pump motors for auxiliary cooling. — heat or afterheat

- - - - - - - - - -

150. Shutting down of the reactor (does, does not) mean that forced convection cooling is no longer needed.

- - - - - - - - - -

151. When a reactor is shut down from an appreciable power level, cooling of the core must continue long enough to dispose of the _____. — does not

- - - - - - - - - -

4.6. Self Test

152. The thermal power at which a nuclear reactor operates is defined by the rate at which _____ is produced. (If you made an incorrect response, repeat Frame 1.) — afterheat

- - - - - - - - - -

153. More than 90% of the heat produced in a nuclear reactor is produced by the _____ of fuel atoms. (If you made an incorrect response, repeat Frame 2.) — heat

- - - - - - - - - -

154. In the operation of nuclear reactors, power, fission rate, and _____ _____ rate are closely related. (If you made an incorrect response, repeat Frame 7.)

fissioning

- - - - - - - - - -

155. When one gram of fuel fissions per day, the power produced is approximately _____. (If you made an incorrect response, repeat Frame 11.)

heat production

- - - - - - - - - -

156. The heat production rate of a nuclear reactor and the heat removal rate of its coolant system must be equal if the _____ of the fuel is to remain constant. (If you made an incorrect response, repeat Frames 23-25.)

10^6 watts or 1 Mw

- - - - - - - - - -

157. A nuclear reactor's coolant system is designed such that when the reactor is operating at the designed power level, the fuel _____ will not exceed a certain upper limit. (If you made an incorrect response, repeat Frame 30.)

temperature

- - - - - - - - - -

158. It is necessary that a reduction in power follow a reduction in coolant flow in order for the reactor to operate with fuel temperatures _____ maximum design fuel temperature. (If you made an incorrect response, repeat Frame 44.)

temperature

- - - - - - - - - -

159. The "rate of heat flow through a surface of unit area" is the definition of _____ _____. (If you made an incorrect response, repeat Frame 48.)

below

- - - - - - - - - -

160. The equation for calculating heat flux, ϕ, is:

heat flux

$$\phi = \frac{Q}{tA}$$

and has the dimensions

$$\frac{\text{Btu}}{(_____)(_____)}.$$

(If you made an incorrect response, repeat Frames 50-52.)

- - - - - - - - - -

161. If 5,000 Btu are transferred each minute through a radiator that has a surface area of 250 ft^2, the heat flux of the radiator will be _____. (If you made an incorrect response, repeat Frames 52-56.)

$\frac{\text{Btu}}{(\text{hour})(\text{ft}^2)}$

- - - - - - - - - -

162. The temperature that one would measure if a thermometer were immersed in the middle of the coolant stream is called the coolant _____ temperature. (If you made an incorrect response, repeat Frame 63.)

$1200 \frac{\text{Btu}}{\text{hr} \cdot \text{ft}^2}$

- - - - - - - - - -

163. For a given coolant velocity in a given system, the amount of heat being transferred from the surface to the coolant, per °F difference between surface and bulk temperatures, is (variable, constant). (If you made an incorrect response, repeat Frames 67-68.)

bulk

- - - - - - - - - -

164. When nuclear reactors are designed, the first decision to be made is what the maximum allowable power level will be. Then the cooling system is designed to dispose of all heat produced at that maximum _____ power level. (If you made an incorrect response, repeat Frame 89.)

constant

- - - - - - - - - -

165. If we design a cooling system to maintain predetermined adequately low bulk inlet and outlet coolant temperatures, we can safely assume that the internal _____ temperatures will not exceed the desired level. (If you made an incorrect response, repeat Frame 94.)

allowable or design

- - - - - - - - - -

166. The parameters that we measure for calculating power level are _____ and _____ bulk coolant temperatures and _____ _____ rate. (If you made an incorrect response, repeat Frame 95.)

fuel

- - - - - - - - - -

167. Other than to prevent freezing, when the coolant is water, there is no physical reason to keep the inlet temperature above ambient except to minimize _____ cycling. (If you made an incorrect response, repeat Frames 96-97.)

inlet, outlet, coolant flow

- - - - - - - - - -

168. A type of boiling where small bubbles of steam continuously form and collapse around tiny particles of solids and gases on a fuel-element surface is called _____ boiling. (If you made an incorrect response, repeat Frames 108-111.)

thermal

- - - - - - - - - -

169. Nucleate boiling helps the heat transfer because it both breaks up the laminar film and increases _____ in the main coolant stream. (If you made an incorrect response, repeat Frame 112.) — nucleate

- - - - - - - - - -

170. In addition to possible fuel meltdown from high fuel temperatures, high fuel cladding temperatures (especially when the cladding is aluminum) could cause decreased _____ strength of the cladding. (If you made an incorrect response, repeat Frames 121-132.) — turbulence

- - - - - - - - - -

171. The heat generated by the decay of fission products and radioactive atoms in structural materials after the reactor is shut down is called _____. (If you made an incorrect response, repeat Frame 134.) — structural

- - - - - - - - - -

172. Most of the afterheat generated in the core is caused by energetic _____ particles colliding with the materials of the core. (If you made an incorrect response, repeat Frames 135-137.) — afterheat

- - - - - - - - - -

173. A significant amount of the afterheat generated in the reactor structural materials is the result of _____ heating. (If you made an incorrect response, repeat Frame 139.) — beta

- - - - - - - - - -

174. Afterheat can cause serious overheating in the fuel if _____ is discontinued immediately after shutdown. (If you made an incorrect response, repeat Frame 144.)

gamma

- - - - - - - - - -

cooling

SECTION IV-5

MISCELLANEOUS ITEMS

This section is devoted to a brief discussion of some miscellaneous items that are important to the operation of water-cooled nuclear reactors.

5.1. Water Hammer

1. "Water hammer" is the name given to the effect produced when a valve is closed quickly and the energy of the moving water is dissipated against the valve.

- - - - - - - - - -

2. When flowing water is caused to stop quickly, as when a valve is closed, the rushing water tries to move the valve. The sound produced by the water hitting the valve is called water _____.

- - - - - - - - - -

3. The water not only tries to move the valve, it may cause hydraulic stresses all along the pipe as the kinetic energy of the water is dissipated. hammer

- - - - - - - - - -

4. In the building of most residences, an air trap is built into the plumbing near each valve so that the kinetic energy of the water is dissipated by compressing the air in the trap, as shown in Fig. 5.1.

- - - - - - - - - -

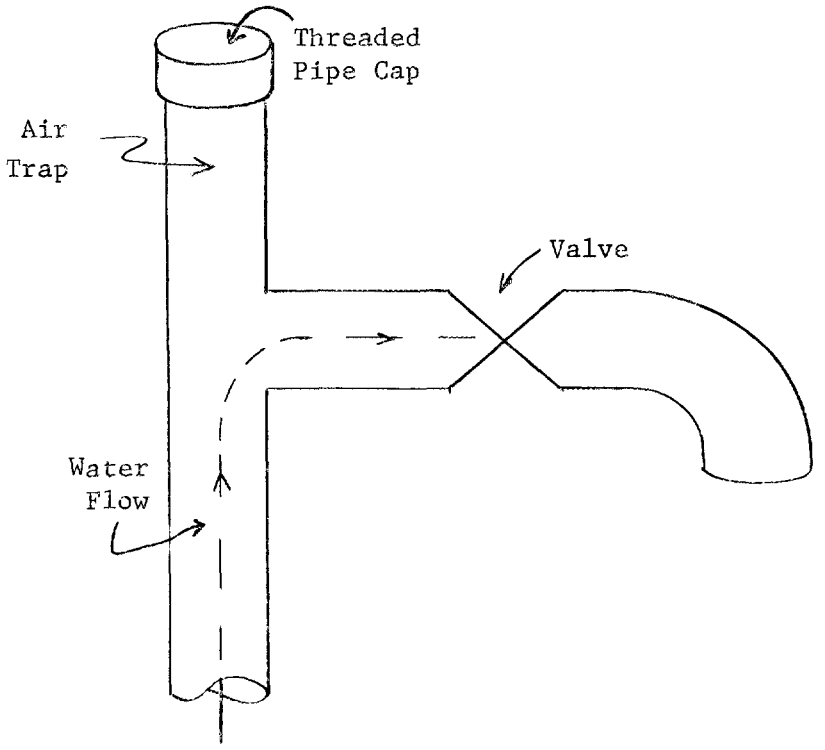

Fig. 5.1. Air Trap to Control Water Hammer in House Plumbing

- - - - - - - - - -

5. In Fig. 5.1, the normal flow of the water is as shown by the arrow. When the valve is closed, the surge of the water is cushioned by the air in the trap, so that the valve and piping are protected from hydraulic _____.

- - - - - - - - - -

6. In commercial installations, where a simple air trap may not be practical, water hammer may be controlled by controlling the speed with which a valve is closed. stresses

- - - - - - - - - -

7. When a valve is closed slowly, water speed decreases slowly and there is little or no water _____.

- - - - - - - - - -

8. Look at the coolant loop in Fig. 5.2. When the one pump is shut off, the flow will coast to a stop as the pump impeller coasts down, and the check valve will close slowly with no water hammer resulting. hammer

- - - - - - - - - -

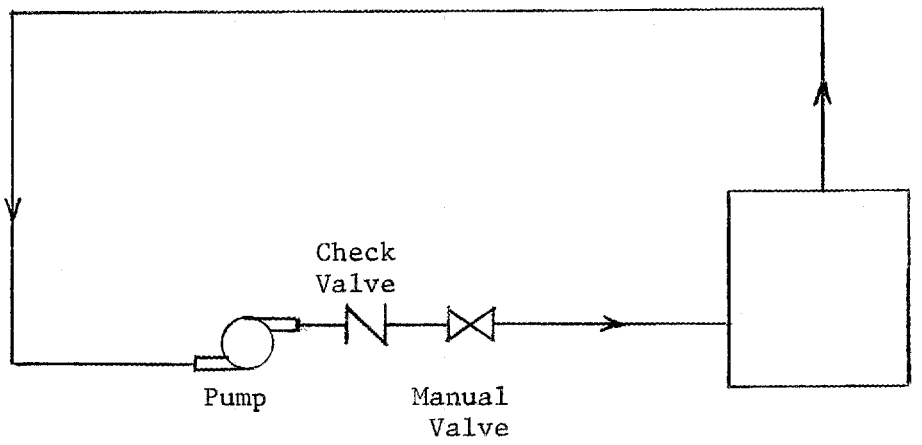

Fig. 5.2. Coolant Loop with One Pump

- - - - - - - - - -

9. When two pumps are in parallel as shown in Fig. 5.3, a water-hammer problem can occur. If one pump (A) is shut off, pump (B) will produce enough pressure to slam check valve (A) closed, producing a _____ _____.

- - - - - - - - - -

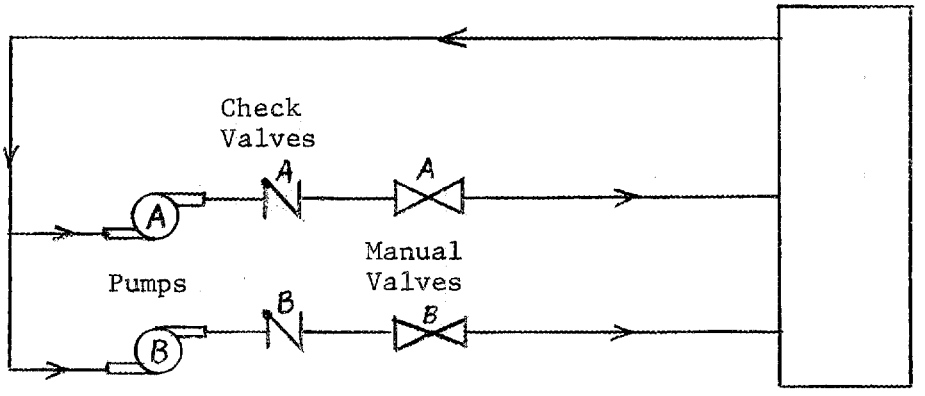

Fig. 5.3. Coolant Loop with Two Pumps in Parallel

- - - - - - - - - -

10. This may seem to be a minor item, but when large volumes of water are being pumped, a strong water hammer can do considerable damage.

water hammer

- - - - - - - - - -

11. A few years ago a water hammer in the ORR primary coolant system caused a rupture of the reactor-tank gasket.

- - - - - - - - - -

12. Whatever the problems with water hammer, sound operational procedures to guarantee the proper sequence of starting or stopping pumps and opening or closing valves, coupled with reasonable care in the operation of manually operated valves, should do much to solve them.

- - - - - - - - - -

5.2. Coolant Purity

13. The problem of coolant purity, especially when the coolant is water, is not directly related to heat removal but is a concern in maintaining the quality of the coolant.

- - - - - - - - - -

14. The first concern, especially in pool-type reactors such as the ORR and the HFIR, is that the water shall be clear so that underwater parts can be easily seen.

- - - - - - - - - -

15. Much of the routine work, such as refueling and the insertion and removal of experiment rigs, is done with 20 ft or so of water as a radiation shield between the reactor vessel and the operator.

- - - - - - - - - -

16. The water in both the reactor pool and in the reactor vessel must be _____ to make such work possible.

- - - - - - - - - -

17. To achieve such clarity and to keep the water pure, a system of demineralizers and filters, similar to that shown in Fig. 5.4, is used. clear

- - - - - - - - - -

18. <u>Strainers</u> (large-pore, wire-mesh baskets placed in the coolant stream) are used to remove large pieces of matter (pieces of gaskets, small bolts, washers, etc.) which might enter the system while maintenance work is being performed.

- - - - - - - - - -

19. Large pieces of matter in the primary coolant system could lodge against a fuel piece and restrict the flow of coolant through the fuel. They could also damage the pumps or heat exchangers.

- - - - - - - - - -

20. Strainers, then, are used to remove from the coolant stream pieces of matter large enough to block the coolant flow through the _____.

- - - - - - - - - -

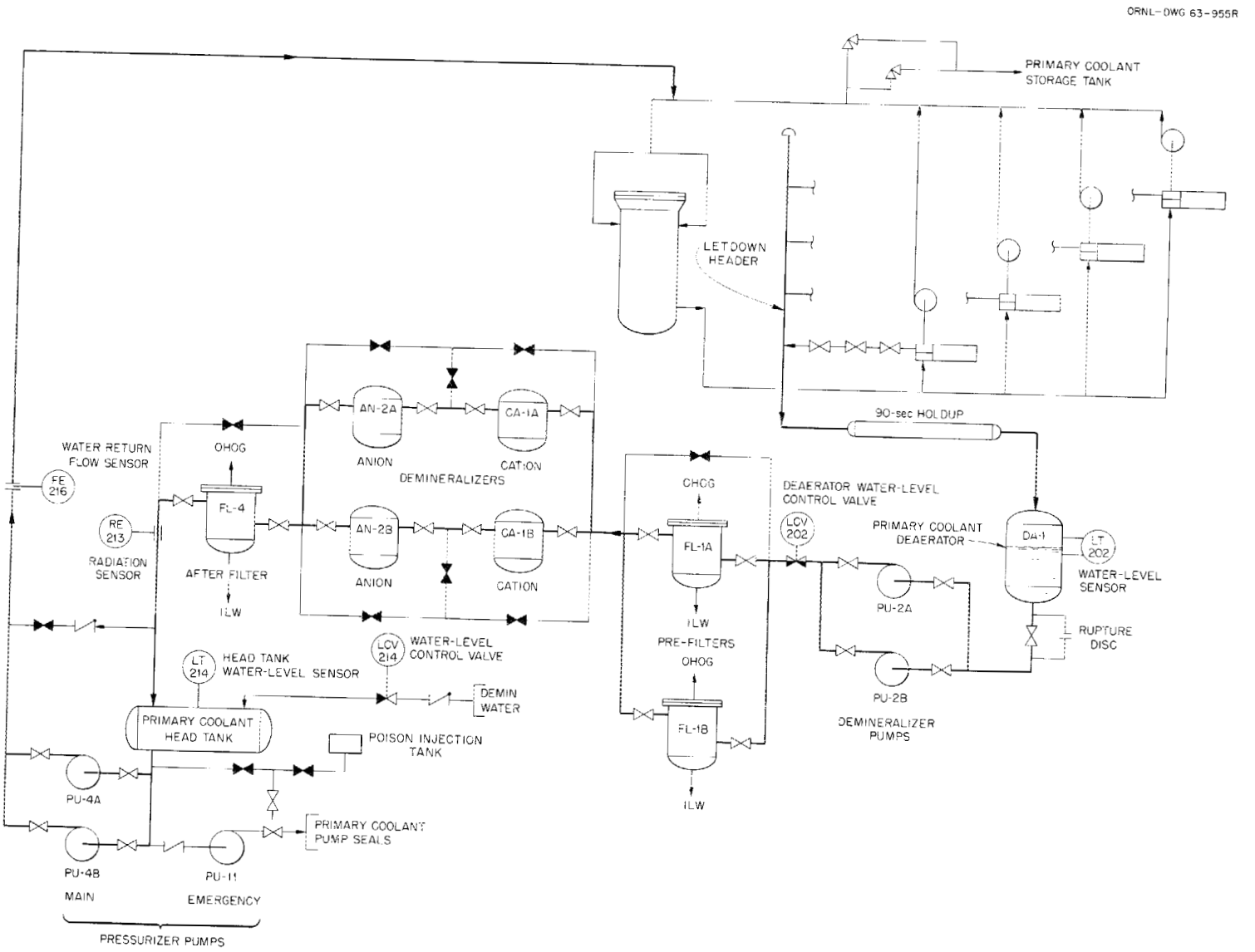

Fig. 5.4. Primary Coolant Cleanup System

21. A few years ago a fuel piece in the ORR suffered a partial meltdown when a piece of a rubber gasket lodged within the upper end of a fuel piece and restricted the _____ flow. fuel

- - - - - - - - - -

22. Such a meltdown is hazardous not only because of the damage to the reactor but also because of the radioactive contamination of the coolant system and the personnel hazard of a possible release of radioactive materials to the environment. coolant

- - - - - - - - - -

23. Filters are placed in the coolant stream to remove very small particles of matter from the coolant.

- - - - - - - - - -

24. Filters in reactor coolant systems are often made up of groups of sintered (porous) stainless-steel tubes. The filters are placed in the coolant stream in such a way as to cause the coolant to flow through the pores of the tubes, cleaning the coolant of any particulate matter larger than the pores.

- - - - - - - - - -

25. The sintered stainless-steel tubes of one set of filters at the HFIR has pore openings of 20 microns, 20 millionths of a meter in diameter.

- - - - - - - - - -

26. Algae and corrosion products, such as aluminum oxides, are some of the particulate materials that are removed from the coolant stream by these _____.

- - - - - - - - - -

27. Algae are most often found in the secondary coolant systems since these contain more mineral salts. However, certain types of algae may grow in sheltered portions of the pool coolant system and eventually get into other regions. filters

- - - - - - - - - -

28. Bactericides are usually used to control algae growth in secondary systems. However, since it is not recommended that bactericides be used in either the reactor or pool primary coolant systems, the _____ is a necessary part of these cleanup systems.

- - - - - - - - - -

29. To help keep all coolant systems clean, both bactericides and filters are used to keep the coolant free of _____. filter

- - - - - - - - - -

30. In the primary coolant system, a cause of cloudiness in the water is the metallic oxide which forms on the fuel cladding and structural components of the core and flakes off into the coolant system. algae

- - - - - - - - - -

31. Aluminum oxide builds up on the surface of aluminum-clad fuel elements and, under certain conditions, flakes off or erodes off into the coolant producing a _____ which can be remedied by filtering the water.

- - - - - - - - - -

32. In extreme cases of aluminum oxide building up in the water, the water may become so cloudy that underwater work is impossible until the oxide has been removed with an adequate system of _____. — cloudiness

- - - - - - - - - -

33. Control of the pH of the water helps to minimize the buildup of the oxide scale on aluminum. — filters

- - - - - - - - - -

34. The buildup of oxide scale in the primary coolant streams of both the ORR and the HFIR is minimized by keeping the _____ of the water at about 5.0.

- - - - - - - - - -

35. At the HFIR, acid is added automatically, as needed, to the primary-coolant head tank to keep the system pH at _____. — pH

- - - - - - - - - -

36. Thus, the purity of the water is greatly increased by using chemicals to inhibit the growth of algae and the formation of oxide scale and by physically removing particulate matter from the water through the use of _____ and _____. — 5.0

- - - - - - - - - -

37. Although filters and strainers can remove particulate matter from the coolant water, dissolved contaminants must be removed chemically by demineralizers. — strainers, filters

- - - - - - - - - -

38. Demineralizers use ion-exchange resins to remove _____ contaminants from the water.

- - - - - - - - - -

39. We do not wish to probe deeply into the chemical nature of ion-exchange resins, so we shall just mention that there are certain chemical resins which have a greater affinity for one type of ion than for another type of ion.

dissolved

- - - - - - - - - -

40. When a resin is attached to one type of ion (A) and it comes in contact with an ion for which it has a greater affinity (B), it will exchange ion (A) for ion (B). Thus the resins are called ion-_____ resins.

- - - - - - - - - -

41. Most potable water (water that is pure enough for drinking purposes) has dissolved minerals in it such as calcium, iron, magnesium, and sodium.

exchange

- - - - - - - - - -

42. Since these dissolved minerals become radioactive in reactor systems or contribute to the corrosion of the reactor components, they must be removed from the water.

- - - - - - - - - -

43. To remove these _____ minerals, two types of demineralizers are used.

- - - - - - - - - -

44. The first demineralizer is filled with a "cation" resin which will exchange the hydrogen ion normally attached to it for other cations (metallic ions such as sodium, calcium, iron, etc.). In this exchange, the _____ or metallic ions are removed from the water.

dissolved

- - - - - - - - - -

45. Let us use for an example a cation resin that normally has a hydrogen ion attached to it. As water with dissolved calcium in it flows through the resin, the resin releases the hydrogen and retains the calcium. This is usually a desirable exchange.

cations

- - - - - - - - - -

46. If dissolved calcium in the water increases scale formation and dissolved hydrogen does not, the above exchange of ions is _____.

- - - - - - - - - -

47. As the cation resin retains more and more calcium, for example, its effectiveness decreases. When the resin reaches a certain minimum state of effectiveness, it must be <u>regenerated</u>, a process by which the calcium is removed and the original ion (in the above case, hydrogen) is replaced on the resin.

desirable or good

- - - - - - - - - -

48. When the ability of a resin to take undesirable ions from the water is depleted, the resin must be _____.

- - - - - - - - - -

49. A common regenerating chemical for the cation resins used at the ORR and the HFIR is nitric acid.

regenerated

- - - - - - - - - -

50. The hydrogen from the nitric acid attaches itself to the resin quite easily when the concentration of nitric acid in the regenerating solution is about 5%. When this exchange is completed, the resin has been _____.

- - - - - - - - - -

51. Because this acid is an easily obtained, relatively inexpensive source of hydrogen ions, many cation resins are regenerated with a 5% _____ _____ solution. — regenerated

- - - - - - - - - -

52. In order to completely demineralize the water, unwanted anions (non-metallic ions such as sulfate and carbonate ions) must be removed. — nitric acid

- - - - - - - - - -

53. A resin which exchanges one type of anion for another type of anion is called an _____-exchange resin.

- - - - - - - - - -

54. An anion resin is depleted in much the same way that a cation resin is depleted; that is, there comes a time in the life of the resin when there are too few of the anions available which can be _____ for undesirable anions. — anion

- - - - - - - - - -

55. When the anion resin is depleted, it, too, may be _____. — exchanged

- - - - - - - - - -

56. The regenerating chemical for many anion resins is a caustic such as sodium hydroxide which is used at a concentration of about 5%. — regenerated

- - - - - - - - - -

57. As the 5% caustic solution flows through the resin, the undesirable anions that are attached to the resin are replaced by the anions of the caustic. Then the undesirable, often radioactive, anions are flushed out of the system through a waste system drain, leaving the resin in a _____ condition.

- - - - - - - - - -

58. Since many of the undesirable ions that are removed from the coolant by the demineralizers are radioactive, one test to determine the need for regeneration of the resin is to check the radioactivity level of the coolant. regenerated

- - - - - - - - - -

59. Samples are taken periodically of the reactor inlet coolant stream, and the _____ level of the coolant (measured in disintegrations per minute per milliliter, $\frac{d}{m \cdot ml}$, of solution) is determined.

- - - - - - - - - -

60. Since many factors other than demineralizer-resin effectiveness (a leaking fuel element, for example) may cause the radioactivity level of the coolant to increase, this is only one of at least three tests used to determine the need to _____ the demineralizer resin. radioactivity

- - - - - - - - - -

61. Another test is the pH of the coolant water. The pH of the water should change as the water flows through the demineralizers. regenerate

- - - - - - - - - -

62. At the HFIR, the pH of the primary coolant water is maintained at 5.0 by adding acid, as needed, after the water leaves the demineralizers. Thus, the pH at the inlet to the demineralizers is near 5.0 and the effluent is higher, near 6.0, when the resin has just been regenerated.

- - - - - - - - - -

63. As the above resin is depleted, the pH of the effluent stream decreases until there is little or no difference between the pH of the demineralizer inlet and exit streams. Little or no change in the pH between the inlet and exit coolant streams can indicate that the demineralizer resin is _____.

- - - - - - - - - -

64. The third test, and in many cases the most important test of demineralizer efficiency, is the resistivity of the water. A given volume of water is measured to determine how much opposition it offers to the flow of an electric current. The resistance offered by a 1 cm^2 column of water, per cm of its length, is called its resistivity and is measured in ohm-centimeters.

depleted

- - - - - - - - - -

65. As the purity of water increases, the amount of opposition that it offers to the flow of an electric current also increases; that is, its _____ increases.

- - - - - - - - - -

66. Dissolved minerals in water make it a better conductor (a poorer resistor) so such minerals cause its resistivity to (increase, decrease). — resistivity

- - - - - - - - - -

67. When a demineralizer resin is "fresh" (newly regenerated), it should remove most of the dissolved minerals in the water. The resistivity of such water should be (high, low). — decrease

- - - - - - - - - -

68. When a pair of demineralizers (cation and anion) is regenerated at the ORR or HFIR, the pair, working as a unit, are expected to produce water of such high purity that its resistivity is around 2 or 2.5 million ohm-centimeters. — high

- - - - - - - - - -

69. Water which has a resistivity of 2 million ohm-centimeters or greater is considered to be water of very _____ purity.

- - - - - - - - - -

70. As a demineralizer resin becomes depleted, it is unable to remove, as efficiently as before, the dissolved _____ in the water. — high

- - - - - - - - - -

71. Thus, as the resin becomes depleted and the concentration of dissolved materials increases, the resistivity _____. — materials, minerals, or solids

- - - - - - - - - -

72. When the resistivity of the demineralizer effluent at the ORR or HFIR drops to 800,000 or 900,000 ohm-centimeters, the resin is considered to be depleted and must be regenerated.

decreases

- - - - - - - - - -

73. If the resistivity of the water decreases faster than it normally should, it may also indicate that there is increased corrosion somewhere in the system, something is allowing dissolved materials to leak into the system, or the resin has lost its ability to be regenerated and it should be replaced with new resin.

- - - - - - - - - -

74. Let us summarize by saying that the high degree of purity that must be maintained, if water is to be used as a reactor coolant, depends on:

a. _____ to remove large particulate matter.

b. _____ to remove algae and other small particulate matter.

c. Demineralizers to remove _____ materials and thus keep the resistivity of the water high.

- - - - - - - - - -

5.3. Self Test

75. When a valve that controls water flow is closed quickly, the sound produced as the energy of the moving water is dissipated is called _____ _____. (If you made an incorrect response, repeat Frame 2.)

strainers, filters, dissolved

- - - - - - - - - -

76. Not only may valves be damaged by water hammer, but a strong water hammer causes hydraulic _____ along the pipe. (If you made an incorrect response, repeat Frame 3.) — water hammer

- - - - - - - - - -

77. When a valve is closed slowly, water speed decreases slowly and there is little or no _____ _____. (If you made an incorrect response, repeat Frame 7.) — stresses

- - - - - - - - - -

78. Most problems of water hammer can be solved by sound operational procedures and reasonable care, especially in the operation of manually operated _____. (If you made an incorrect response, repeat Frame 12.) — water hammer

- - - - - - - - - -

79. In order to remove large pieces of matter, which might enter the coolant system when maintenance work is being done, _____ are used. (If you made an incorrect response, repeat Frame 18.) — valves

- - - - - - - - - -

80. While a large piece of foreign matter in the coolant stream might not inhibit the clarity of the water, it might cause a fuel-element _____ if it should lodge against the fuel-element coolant channel and restrict coolant flow through it. (If you made an incorrect response, repeat Frames 20-23.) — strainers

- - - - - - - - - -

81. Algae is a common contaminant, especially in the secondary sections of coolant systems, and is usually controlled by adding _____ to the water. (If you made an incorrect response, repeat Frames 28-29.) — meltdown

- - - - - - - - - -

82. The growth of algae can be inhibited by the use of bactericides; but when algae do get into the coolant, they must be removed by the use of _____. (If you made an incorrect response, repeat Frames 25-29.) — bactericides

- - - - - - - - - -

83. Filters are also used to remove the cloudiness of the water caused by metallic _____ which form on fuel elements and reactor structural components and flake off into the water. (If you made an incorrect response, repeat Frames 30-33.) — filters

- - - - - - - - - -

84. At the ORR and the HFIR, the formation of aluminum oxide on fuel elements is inhibited by keeping the _____ of the primary coolant water at about 5.0. (If you made an incorrect response, repeat Frames 34-35.) — oxides

- - - - - - - - - -

85. Dissolved contaminants in the coolant must be removed by ion-exchange columns called _____. (If you made an incorrect response, repeat Frames 37-39.) — pH

- - - - - - - - - -

86. Demineralizers clean the water of dissolved contaminants by exchanging ions, releasing ions which cause no problems, and retaining _____ ions. (If you made an incorrect response, repeat Frames 40-46.) — demineralizers

- - - - - - - - - -

87. Most demineralizer systems make use of two types of ion-exchange resins. One resin cleans the water of undesirable anions, and the other resin cleans the water of undesirable _____. (If you made an incorrect response, repeat Frames 45-54.)

undesirable

- - - - - - - - - -

88. When the ion-exchange resins are saturated with undesirable ions, they may be returned to their original capacity to demineralize the water by a process called _____. (If you made an incorrect response, repeat Frames 42-57.)

cations

- - - - - - - - - -

89. One of the tests which indicates whether or not a demineralizer resin needs regenerating is its ability to change the pH of the water. If the pH does not change, the resin probably (needs, does not need) to be regenerated. (If you made an incorrect response, repeat Frames 61-63.)

regeneration

- - - - - - - - - -

90. If the resistivity of the demineralizer effluent is high (around 2-million ohm-cm), the demineralizer resin (does, does not) need to be regenerated. (If you made an incorrect response, repeat Frames 64-71.)

needs

- - - - - - - - - -

does not

INTERNAL DISTRIBUTION

1. C. D. Cagle
2. W. R. Casto
3. D. F. Cope, AEC
4-53. J. A. Cox
54. E. N. Cramer
55. S. S. Hurt, III
56. E. M. King
57. R. V. McCord
58. H. M. Roth, AEC
59. R. L. Scott, Jr.
60. S. D. Sheppard
61. W. H. Tabor
62. E. J. Witkowski
63-162. Laboratory Records
163-164. Central Research Library
165. Document Reference Section
166. Laboratory Records, ORNL R.C.
167. ORNL Patent Office
168-182. Division of Technical Information Extension

EXTERNAL DISTRIBUTION

183. R. J. Bursey, Douglas United Nuclear, Inc.
184. F. R. Keller, Idaho Nuclear Corporation
185. R. W. Powell, Brookhaven National Lab.
186. E. H. Smith, Idaho Nuclear Corporation
187. E. A. Wimunc, Argonne National Lab.