CENTRAL RESEARCH LIBRARY
DOCUMENT COLLECTION

OAK RIDGE NATIONAL LABORATORY
operated by
UNION CARBIDE CORPORATION
NUCLEAR DIVISION
for the
U.S. ATOMIC ENERGY COMMISSION

MARTIN MARIETTA ENERGY SYSTEMS LIBRARIES
3 4456 0060592 2

ORNL-TM-2541
COPY NO. - 25
DATE - March 14, 1969

HFIRHY - A COMPUTER PROGRAM FOR CALCULATION OF FLOW DISTRIBUTION AND PRESSURE DROP IN THE HFIR CORE

L. A. Haack

OAK RIDGE NATIONAL LABORATORY
CENTRAL RESEARCH LIBRARY
DOCUMENT COLLECTION
LIBRARY LOAN COPY
DO NOT TRANSFER TO ANOTHER PERSON
If you wish someone else to see this document, send in name with document and the library will arrange a loan.
UCN-7969
(3 3-67)

NOTICE This document contains information of a preliminary nature and was prepared primarily for internal use at the Oak Ridge National Laboratory. It is subject to revision or correction and therefore does not represent a final report.

LEGAL NOTICE

This report was prepared as an account of Government sponsored work. Neither the United States, nor the Commission, nor any person acting on behalf of the Commission:

A. Makes any warranty or representation, expressed or implied, with respect to the accuracy, completeness, or usefulness of the information contained in this report, or that the use of any information, apparatus, method, or process disclosed in this report may not infringe privately owned rights; or

B. Assumes any liabilities with respect to the use of, or for damages resulting from the use of any information, apparatus, method, or process disclosed in this report.

As used in the above, "person acting on behalf of the Commission" includes any employee or contractor of the Commission, or employee of such contractor, to the extent that such employee or contractor of the Commission, or employee of such contractor prepares, disseminates, or provides access to, any information pursuant to his employment or contract with the Commission, or his employment with such contractor.

ORNL-TM-2541

Contract No. W-7405-eng-26

OPERATIONS

HFIRHY - A COMPUTER PROGRAM FOR CALCULATION OF FLOW DISTRIBUTION AND PRESSURE DROP IN THE HFIR CORE

L. A. Haack

APRIL 1969

OAK RIDGE NATIONAL LABORATORY
Oak Ridge, Tennessee
operated by
UNION CARBIDE CORPORATION
for the
U.S. ATOMIC ENERGY COMMISSION

MARTIN MARIETTA ENERGY SYSTEMS LIBRARIES
3 4456 0060592 2

CONTENTS

	Page
ABSTRACT	1
INTRODUCTION	1
DESCRIPTION OF PROGRAM	2
EXECUTION OF HFIRHY ON CDC 1700	10
LIMITATIONS OF HFIRHY AND RECOMMENDED CHANGES	10
ACKNOWLEDGMENT	12
APPENDIX A	13
APPENDIX B	15
DISTRIBUTION	17

ABSTRACT

A computer program, HFIRHY, has been written which calculates flow rates through the major parallel flow paths of the HFIR core and the pressure drop across the fuel element. The program is simply a computer version of the manual method outlined previously by H. A. McLain as adapted for use at HFIR by G. J. Dixon. Written in FORTRAN IV for use on the on-line CDC-1700 computer, the program uses 16 inputs (most of which are pressure readings across either a venturi meter, or orifices, or between various parts of the reactor pressure vessel). The inputs are combined with appropriate flow-Δp correlations which were obtained out-of-pile during development of the various reactor components several years ago. At present, all readings are taken by an operator and later entered on a teletype for execution of the program. However, with modification to some of the instrumentation, the CDC-1700 could read all the necessary data (the computer already continuously monitors many of the reactor parameters required for the program) and then execute the program with no need to enter manually the required data.

INTRODUCTION

Although the total primary system flow is very carefully monitored with a venturi meter, there is no direct method of measuring the flow through the fuel element, target region, control region, or reflector region. Also, there is no direct method of measuring the pressure drop across the fuel element. Pressure taps were installed during construction at various locations within the pressure vessel; and it is possible, then, to use readings from these taps together with flow-Δp correlations obtained on the individual components during out-of-pile tests to make flow and pressure balances for the various major parallel flow paths.

For about the first two years of HFIR operation at full nominal power, these calculations were performed manually using the method outlined by McLain.[1,2] However, availability of the on-line CDC-1700 computer early in 1968 made its use possible for these calculations. Accordingly, the various correlations were written in analytical form and a computer program was written which followed the steps of the manual method. The

---

[1]H. A. McLain, "November 1965 Hydraulic Tests for the HFIR", Letter to G. J. Dixon dated October 18, 1965.

[2]H. A. McLain, HFIR Fuel Element Steady State Heat Transfer Analysis, Revised Version, ORNL-TM-1904, p. 171-172 (December 1967).

resulting program, HFIRHY, has been in use since June 1968, and has proven to be very convenient and easy to use. For example, prior to June 1968 the manual calculations required about 10 to 15 minutes, were tedious to perform, and were subject to errors. However, input to HFIRHY requires about one to two minutes (16 entries), and execution and printout require about another two minutes (printout requires nearly all of this time). Another advantage is that more personnel can perform the calculation (previously one person normally performed the manual calculation). Shift supervisors are now being instructed in executing the program on a routine basis; and, with publication of this report, other technical persons can become sufficiently familiar with the program to execute it.

Of even more importance, however, is that, with certain modification to some of the instrumentation, the CDC-1700 could read all the data and execute the program on command (the computer already does this with several other programs).

DESCRIPTION OF THE PROGRAM

The sequence of steps for calculating the flow rates and pressure drops of interest by the manual method had been adapted by G. J. Dixon following the method of McLain. Though somewhat tedious, because of several iterations required, they were straightforward. Accordingly, the same sequence of steps was followed in writing HFIRHY. The only major change required was the expression of the various flow-Δp correlations, which had been obtained in out-of-pile tests earlier, in analytical form. Once this had been done it was simply a matter of writing the necessary Fortran statements.

A schematic diagram of the flow system of the HFIR used in HFIRHY is shown in Fig. 1 (values calculated by HFIRHY are shown in parentheses). The calculations are performed in three major phases:

Phase 1: Calculation of the total primary system flow.

Phase 2: Calculation of the "side flows" (control-reflector region, vertical experiment facilities, beam tubes, and engineering facilities).

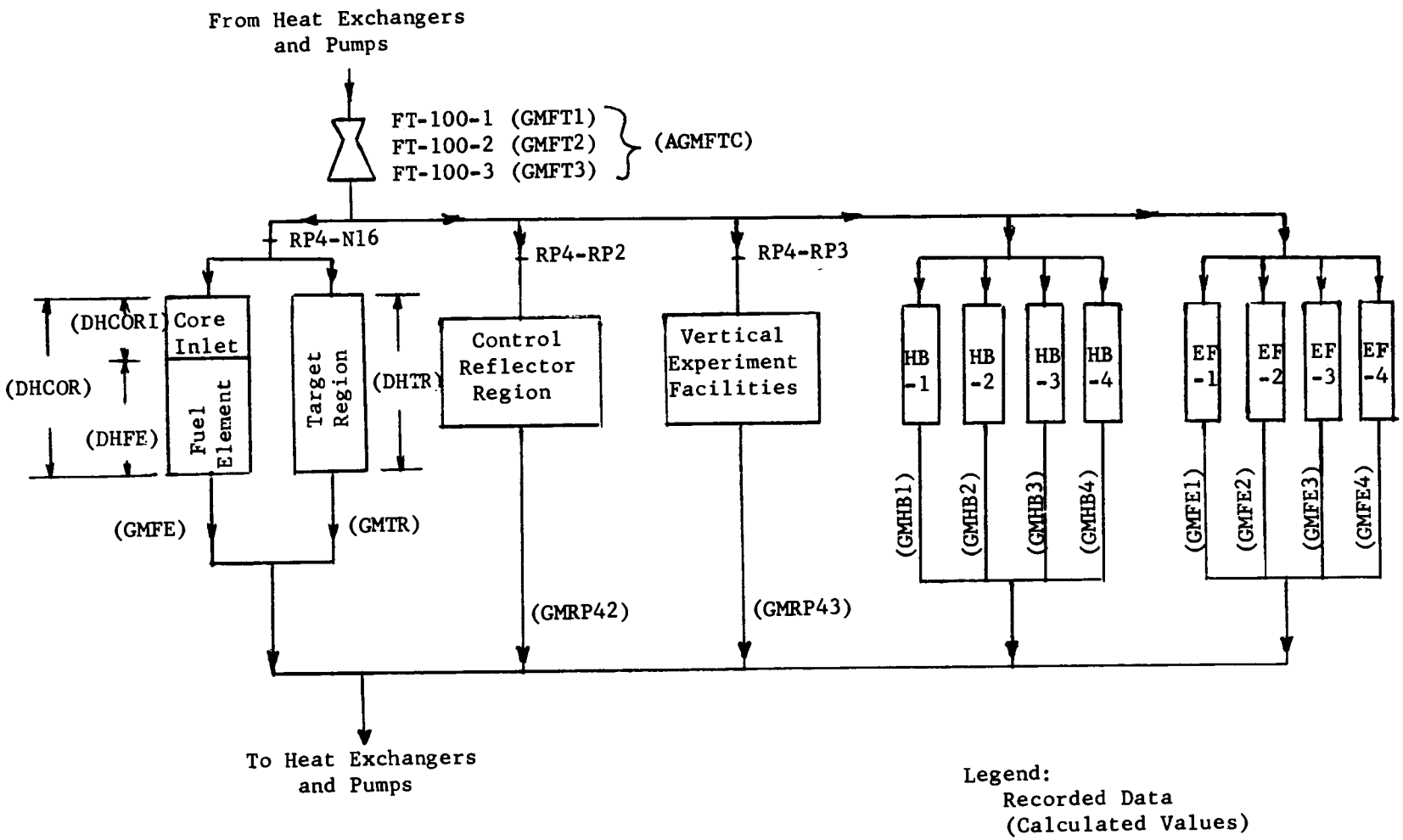

Fig. 1. Schematic Diagram of Flow System of HFIRHY

Phase 3: Iterative calculation of flow rates through the fuel element and target region (and of the corresponding pressure drop).

HFIRHY then prints out the inputs and the results.

The close correspondence between the manual method and HFIRHY can be seen in Table 1. Although it is not apparent from Table 1, many of the analytical expressions are valid only for a limited range. This does not cause any problems for nominal full-power conditions, but one should be aware of this limitation. Graphs of the various flow-Δp relationships are not included in this report since the original graphs (or, in some cases, xerox copies) are available from the Operations Division Technical Assistance Department.

Table 2 lists the nomenclature from the data sheet, Fig. 2, and the equivalent name as used in HFIRHY. Slight changes were necessary for HFIRHY since the CDC-1700 limits names to a total of six letters and/or digits.

A listing of HFIRHY is presented in Appendix A, and printout for a typical case is shown in Appendix B. Nomenclature of the printout is more or less self-explanatory. Two symbols which may need further explanation, though, are FENO (fuel element number), and NUMIT (number of iterations required for the fuel element-target region flows and pressure drop).

Table 1. Steps of Manual Method and HFIRHY

Step Number	Manual Method	HFIRHY
1. Record data (by operator) on "Hydraulic Test Data Sheet", Fig. 2.		
2. Convert FT-100-1 reading of data sheet to Δp, psi.	Use graph "FT-100-1, 2-28-66 Calibration" by H. A. McLain.	In analytical form DPFT1 = (0.18750)(FT1001) - 8.000
3. Convert FT-100-2 reading of data sheet to Δp, psi.	Use graph "FT-100-2, 2-28-66 Calibration" by H. A. McLain.	DPFT2 = (0.19643)(FT1002) - 8.8929
4. Convert FT-100-3 reading of data sheet to Δp, psi.	Use graph "FT-100-3, 2-28-66 Calibration" by H. A. McLain.	DPFT3 = (0.20225)(FT1003) - 9.4115
5. Convert Δp of Step 2 to gpm	Use graph "Flow at 650 psi and 120°F" by H. A. McLain.	If DPFT1 <10.55 GMFT1 = (820.0)(DPFT1) + 8149.0 If DPFT1 >10.55 GMFT1 = (775.0)(DPFT1) + 8624.0
A correction is needed if the inlet water temperature is not 120°F.	Use an untitled table. If inlet temperature is 110°F, multiply Step 5 by 0.9988.	GMFT1C = (GMFT1)(0.9988)
6. Convert Δp of Step 3 to gpm.	Same as Step 5.	GMFT2C = (GMFT2)(0.9988)
7. Convert Δp of Step 4 to gpm.	Same as Step 5.	GMFT3C = (GMFT3)(0.9988)
8. Average the flows of Steps 5, 6, and 7. The result is the total primary system flow as measured by the main venturi meter.	$\frac{\text{Step 5 + Step 6 + Step 7}}{(3)}$	AGMFTC = (0.3333)(GMFTC1 + GMFTC2 +GMFTC3)

Table 1. (Continued)

Step Number	Manual Method	HFIRHY
9. Convert RP4-RP2 reading of data sheet to Δp, psi.	Use graph "Fig. 4 PdT-J T = 19.5°C 10-13-65" by H. A. McLain.	DPRP42 = (1.308)(RP4RP2) - 0.769
10. Convert Δp of Step 9 to Δp, ft H_2O.	(2.3233)(Step 9)	DHRP42 = (2.3233)(DPRP42)
11. Convert RP4-RP3 reading of data sheet to Δp, psi.	Same as Step 9.	DPRP43 = (1.308)(RP4R)3) - 0.769
12. Convert Δp of Step 11 to Δp, ft H_2O.	(2.3346)(Step 11)	DHRP43 = (2.3346)(DPRP43)
13. Convert RP4-N16 reading of data sheet to Δp, psi.	Same as Step 9.	DPRP46 = (1.308)(RP4N16) - 0.769
14. Convert Δp of Step 13 to Δp, ft H_2O.	Same as Step 12.	DHRP46 = (2.3346)(DPRP46)
15. Convert Δp of Step 10 to gpm.	Use graph "Fig. 1, Flow Calibration of the HFIR Model C Outer Shroud Flange, 6-22-66" by H. A. McLain.	$GMRP42 = \left(\frac{DHRP42}{1.3679 \times 10^{-4}}\right)^{0.52434}$
16. Convert Δp of Step 12 to gpm.	Use graph "Fig. 6, Vertical Facilities" by H. A. McLain.	$GMRP43 = 19.114(DHRP43)^{0.4222}$
17. Convert HB-1 reading of data sheet to gpm.	Use an unentitled graph of 8/1/65 showing gpm vs Barton Divisions.	GMHB1 = (1.1960)(HB1) + 11.734
18. Repeat Step 17 for HB-2.	Same as Step 17.	GMHB2 = (1.1960)(HB2) + 11.734

Table 1. (Continued)

Step Number	Manual Method	HFIRHY
19. Repeat Step 17 for HB-3.	Same as Step 17.	GMHB3 = (1.1960)(HB3) + 11.734
20. Repeat Step 17 for HB-4.	Same as Step 17.	GMHB4 = (1.1960)(HB4) + 11.734
21. Total flow through horizontal beam tubes.	Step 17 + Step 18 + Step 19 + Step 20	SUMHB = GMHB1 + GMHB2 + GMHB3 + GMHB4
22. Convert EF-1 reading of data sheet to gpm.	Same as Step 17.	GMEF1 = (1.300)(EF1) + 10.850
23. Repeat Step 22 for EF-2 reading of data sheet.	Same as Step 17.	GMEF2 = (1.300)(EF2) + 10.850
24. Repeat Step 22 for EF-4 reading of data sheet.	Same as Step 17.	GMEF4 = (1.300)(EF4) + 10.850
25. Total flow through EF tubes	(Step 22 + Step 23 + Step 24)(4/3)	SUMEF = (1.333)(GMEF1 + GMEF2 + GMEF4)
26. This is the start of an iterative loop to calculate the flow rate through the target region and fuel element.	Step 13 + 25.0. (This is a first guess of the Δp. The 25.0 was found by experience to be a good first guess.)	DHTR = 25.0 + DHRP46
27. Convert Step 26 to gpm.	Use graph "Fig. 9, Target Region Head Loss", H. A. McLain.	$GMTR = \left(\frac{DHTR}{6.629 \times 10^{-4}}\right)^{0.5188}$
28. Obtain total of "side flows".	Step 15 + Step 16 + Step 21 + Step 25	GMBYP = GMRP42 + GMRP43 + SUMHB + SUMEF + GMTR

Table 1. (Continued)

Step Number	Manual Method	HFIRHY
29. Calculate fuel element flow.	Step 8 - Step 28	GMFE = AGMFTC - GMBYP
30. Determine core Δp at flow rate of Step 29.	Core Δp = Step 29)^2(13.79 x 10^{-8}) + Step 14	DHCOR = (GMFE)^2(13.79 x 10^{-8}) + DHRP46
31. Compare core Δp with target region Δp (the two constitute a parallel flow system)	Step 30 - Step 26	TEST = DHCOR - DHTR
32. Repeat Steps 26-31 until |Step 31| is less than 0.5.	At Step 26 increment Step 13	DHTR = DHTR + $\frac{\text{TEST}}{2.0}$
33. After Step 32 is satisfied, calculate the pressure loss of the core inlet.	Use the graph "Fig. 10, Core Inlet Head Loss"	DHCORI = (8.4207 x 10^{-8})(GMFE)$^{1.9947}$
34. Calculate the fuel element pressure drop, ft H_2O.	Step 30 - Step 33	DHFE = DHCOR - DHCORI
35. Convert Step 34 to psi.	$\frac{\text{Step 24}}{2.3346}$	DPFE = $\frac{\text{DHFE}}{2.3346}$

Table 2. Data Sheet Nomenclature and HFIRHY Name

Data Sheet Nomenclature	HFIR Equivalent Name[a]	Comments
FT-100-1	FT1001	Gives total primary system flow directly[b]
FT-100-2	FT1002	Gives total primary system flow directly
FT-100-3	FT1003	Gives total primary system flow directly
RP4-RP2	RP4RP2	Gives combined flow through control region and reflector region directly[c]
RP4-RP3	RP4RP3	Gives flow through the vertical experiment facilities directly
RP4-N16	RP4N16	Used in iterative portion of program to calculate flows and pressure drops across the fuel element and target region
HB-1	HB1	Gives flow through HB-1 directly
HB-2	HB2	Gives flow through HB-2 directly
HB-3	HB3	Gives flow through HB-3 directly
HB-4	HB4	Gives flow through HB-4 directly
EF-1	EF1	Gives flow through EF-1 directly
EF-2	EF2	Gives flow through EF-2 directly
EF-4[d]	EF4	Gives flow through EF-4 directly

[a]The CDC-1700 limits names to a total of six letters and/or digits.

[b]FT1001, FT1002, FT1003 are averaged to give the total primary system flow.

[c]The correlation does not give the separate flows. This flow is also called the "shroud-flange flow".

[d]Instrumentation for EF-3 is inoperative. Flow through EF-3 is assumed to be the average of that through EF-1, EF-2, and EF-4.

HYDRAULIC DATA SHEET

Fuel Element 53 OUTER & INNER

Date	2-25-69						
Power	100.0						
Accumulated Mwd	1937.0						
TR-100-1A	119.3						
TR-100-2A	119.6						
TR-100-3A	119.9						
TR-100-1B	161.0						
TR-100-2B	160.5						
TR-100-3B	160.9						
FT-100-1	98.4						
FT-100-2	98.7						
FT-100-3	98.6						
PT-127	650.0						
FE-216	18.5						
PdT-106(E)	76.0						
PdT-103	54.0						
RP4-RP2*	75.0						
RP4-RP3*	82.0						
RP4-N16*	76.5						
RP1-RP3**	7.0						
HB-1**	8.2						
HB-2**	9.5						
HB-3**	9.0						
HB-4**	8.9						
EF-1**	6.6						
EF-2**	7.0						
EF-3**	—						
EF-4**	6.9						

Please Record Chart Divisions

*Measured on Foxboro instrument

**Measured on Barton instrument

Fig. 2. Data Sheet Used to Record Raw Data

EXECUTION OF HFIRHY ON CDC-1700

Although a version of HFIRHY has been written for the CDC-1604, only the program for the CDC-1700 will be described here.

At the present time the CDC-1700 can read paper tape only. Accordingly, to execute HFIRHY, the assembly language tape ("A" tape) is loaded and the input data (obtained from Figure 2) entered on the teletype. All data (16 input values) are entered with the same format, F8.1, and must be entered in the following order (note that the order of entering the data is not evident from the data sheet presently in use and that some data are not used in the program):

On line 1: Fuel element number, power level, accumulated power, FT-100-1, FT-100-2, FT-100-3, RP4-RP2, RP4-RP3, RP4-N16

On line 2: HB-1, HB-2, HB-3, HB-4, EF-1, EF-2, EF-4

Printout occurs on the "Selectric" located in the main HFIR control room.

LIMITATIONS OF HFIRHY AND RECOMMENDED CHANGES

As is the case with most computer programs, the first version has some approximations or other features which limit its usefulness. At the present time, HFIRHY has the following limitations:

1. The inlet water temperature (for density correction purposes) is assumed to be 120°F and the inlet pressure is assumed to be 600 psi.

   At times the inlet water temperature is as low as 110°F and the inlet pressure can vary (very infrequently) from about 400 to 1000 psi.

2. The coolant conditions in the fuel element are assumed to be at an average temperature of 130°F and average pressure of 600 psi.

   At a constant power of 100 Mw, the main factors which determine the average temperature are the inlet temperature and the fuel-element flow rate, which has been observed to vary from ~11,500 to ~14,000 gpm. In this regard it should be noted also that the exit water temperature from individual channels for nominal

conditions has been calculated to range from 163 to 196°F (ref. 3).

3. It cannot account for the water directed for cooling purposes to experiments in the reflector facilities.

   As experiments (particularly those in the vertical experiment facilities of the permanent reflector which require cooling water from the primary system) are installed in the HFIR, it will be necessary to change the program to take this fact into account. Since the water for the experiments will be diverted mainly from the fuel-element flow, the present version would calculate a higher fuel-element flow than would actually exist. For example, in the typical case shown in Appendix B, the present version calculates a fuel-element flow of 13,751 gpm. If experiments in the permanent reflector diverted 200 gpm, however, the true fuel-element flow would only be 13,551 gpm. The important fact is that the incipient boiling power level would be reduced about 1 Mw.

4. Printout of all coolant flows is in the units of gpm.

   It must be remembered that the unit gpm is a volume rate of flow (there are 7.48 gallons per ft^3). As the temperature of the coolant increases, its density decreases, so there are more cubic feet of coolant flowing (there is also a pressure correction for the density of water). For example, an inlet flow rate of 15,000 gpm at 120°F and 600 psi changes into an exit flow rate of 15,230 gpm at 170°F and 500 psi. If one is attempting to account for differences in flow rates of less than ~200 gpm, it may be impossible to do so if flows expressed only in gpm are available.

---

[3] F. T. Binford, T. E. Cole, and E. N. Cramer (eds.), The High Flux Isotope Reactor - A Functional Description, ORNL-3572, Rev. 2, Vol. 1A, p. 7-14, (May 1968).

5. Control-region flow is not calculated separately.

   The control-region flow is presently printed out as part of the reflector flow. Since the flow through the control region is important, though, from (among other reasons) bearing lifetime and temperature considerations, it is desirable that this flow rate be printed out separately.

The usefulness of HFIRHY would be greatly increased if the preceding five limitations in the present version were removed. The required changes to do this would not be difficult to make.

Also, a useful feature which could be added is the value of incipient boiling power level for the particular conditions (fuel element flow rate and system pressure) which exist at the time. This information has already been published[4] and it would be straightforward to include it in the next version of HFIRHY.

It is recommended, then, that the present version of HFIRHY be changed to eliminate the five limitations listed above and to add the incipient boiling power level feature. A convenient time to make these changes would be when changes in the instrumentation, which could enable the CDC-1700 to read all input parameters, are made.

---

[4]F. T. Binford and E. N. Cramer (eds.), The High Flux Isotope Reactor-A Functional Description (Illustrations), ORNL-3572, Rev. 2, Vol. 1B, p. 118 (June 1968).

ACKNOWLEDGMENT

The manual method of performing the calculations was furnished by G. J. Dixon; he also checked HFIRHY results with those of the manual method for the test cases.

APPENDIX A

LISTING OF HFIRHY PROGRAM

```
      PROGRAM HFIRHY
C THIS IS FOR 1700 ONLY
  101 READ(4,102)FENO,POWER,ACCMUD,FT1001,FT1002,FT1003,RP4RP2,RP4RP3,RP
     X4N16
  102 FORMAT(9F8.1)
  103 READ(4,104)HB1,HB2,HB3,HB4,EF1,EF2,EF4
  104 FORMAT(7F8.1)
      DPFT1=0.1875*FT1001-8.0
      IF(DPFT1.GE.10.55)GO TO 120
  119 GMFT1=820.0*DPFT1+8149.0
      GO TO 121
  120 GMFT1=775.0*DPFT1+8624.0
  121 GMFT1C=GMFT1*0.9938
      DPFT2=0.19643*FT1002-8.8929
      IF(DPFT2.GE.10.55)GO TO 122
  118 GMFT2=820.0*DPFT2+8149.0
      GO TO 123
  122 GMFT2=775.0*DPFT2+8624.0
  123 GMFT2C=GMFT2*0.9938
      DPFT3=0.20225*FT1003-9.4115
      IF(DPFT3.GE.10.55)GO TO 124
  117 GMFT3=820.0*DPFT3+8149.0
      GO TO 125
  124 GMFT3=775.0*DPFT3+8624.0
  125 GMFT3C=GMFT3*0.9938
      AGMFTC=0.33333*(GMFT1C+GMFT2C+GMFT3C)
      DPRP42=1.308*RP4RP2-0.769
      DHRP42=2.3233*DPRP42
      DPRP43=1.308*RP4RP3-0.769
      DHRP43=2.3346*DPRP43
      DPRP46=1.308*RP4N16-0.769
      DHRP46=2.3346*DPRP46
      GMRP42=(DHRP42/1.3679E-4)**0.52434
      GMRP43=19.114*DHRP43**0.4222
      GMHB1=1.1960*HB1+11.734
      GMHB2=1.1960*HB2+11.734
      GMHB3=1.1960*HB3+11.734
      GMHB4=1.1960*HB4+11.734
      GMEF1=1.300*EF1+10.850
      GMEF2=1.300*EF2+10.850
      GMEF4=1.300*EF4+10.850
      SUMHB=GMHB1+GMHB2+GMHB3+GMHB4
      SUMEF=(GMEF1+GMEF2+GMEF4)*1.3333
      DHTR=25.0+DHRP46
      NUMIT=1
  130 GMTR=(DHTR/6.629E-4)**0.5188
```

```
      GMBYP=GMRP42+GMRP43+SUMHB+SUMEF+GMTR
      GMFE=AGMFTC-GMBYP
      DHCOR=13.795-2*GMFE**2+DHRP46
      TEST=DHCOR-DHTR
      IF(ABS(TEST).LE.0.5)GO TO 200
  199 DHTR=DHTR+TEST/2.0
      NUMIT=NUMIT+1
      GO TO 180
  200 DHCORI=8.4207E-2*GMFE**1.9947
      DHFE=DHCOR-DHCORI
      DPFE=DHFE/2.3346
      WRITE(9,210)
  210 FORMAT(1H1,1X,106HFEMO  MWD  POWER  FT1001  FT1002  FT1003  RP4RP2
     X  RP4RP3  RP4N16   HB1   HB2   HB3   HB4   EF1   EF2   EF4)
      WRITE(9,211)FEMO,ACCMWD,POWER,FT1001,FT1002,FT1003,RP4RP2,RP4RP3,R
     XP4N16,HB1,HB2,HB3,HB4,EF1,EF2,EF4
  211 FORMAT(F4.0,F6.0,F6.0,F8.1,F8.1,F8.1,F8.1,F8.1,F8.1,F8.1,F7.1,F6.1
     X,F6.1,F6.1,F6.1,F6.1,F6.1)
      WRITE(9,220)
  220 FORMAT(1H0,2X,5HFLOWS,70X,13HPRESSURE DROP/8X,60HTOTAL   FUEL ELEM
     XENT  TARGET  CONTROL   VEF   BEAM TUBE   EF,15X,12HFUEL ELEMENT/39
     XX,30HREGION  TOTAL    TOTAL   TOTAL/9X,3HGPM,8X,3HGPM,8X,3HGPM,6X,
     X3HGPM,5X,3HGPM,6X,3HGPM,5X,3HGPM,18X,3HPSI,10X,5HDHCOR,3X,4HDHTR,2
     XX,5HNUMIT)
      WRITE(9,221)AGMFTC,GMFE,GMTR,GMRP42,GMRP43,SUMHB,SUMEF,DPFE,DHCOR,
     XDHTR,NUMIT
  221 FORMAT(7X,F6.0,4X,F6.0,6X,F5.0,3X,F6.0,3X,F5.0,4X,F4.0,5X,F4.0,15X
     X,F7.1,7X,F7.1,F7.1,2X,I5)
      GO TO 101
      END
```

APPENDIX B

PRINTOUT SHEET FOR A TYPICAL HFIRHY CASE

1 FENO	MWD	POWER	FT1001	FT1002	FT1003	RP4RP2	RP4RP3	RP4N16	HB1	HB2	HB3	HB4	EF1	EF2	EF4
53.	1937.	100.	98.4	98.7	98.6	75.0	82.0	76.5	8.2	9.5	9.0	8.9	6.6	7.0	6.9

0 FLOWS

TOTAL GPM	FUEL ELEMENT GPM	TARGET GPM	CONTROL REGION GPM	VEF TOTAL GPM	BEAM TUBE TOTAL GPM	EF TOTAL GPM
16732.	13751.	794.	1822.	196.	90.	79.

PRESSURE DROP

FUEL ELEMENT PSI	DHCOR	DHTR	NUMIT
104.0	257.9	257.6	3

DISTRIBUTION

1. F. T. Binford
2. J. B. Bullock
3. C. C. Cagle
4. B. L. Corbett
5. R. A. Costner, Jr.
6. J. A. Cox
7. H. A. Danforth
8. G. J. Dixon
9-11. L. A. Haack
12. T. P. Hamrick
13. F. B. K. Kam
14. R. V. McCord
15. L. C. Oakes
16. G. R. Owens
17. K. H. Poteet
18. M. E. Ramsey
19. A. F. Rupp
20. T. M. Sims
21. L. E. Stanford
22. J. H. Swanks
23. C. C. Webster
24. R. C. Weir
25-26. Central Research Library
27. Document Reference Section
28-29. Laboratory Records Department
30. Laboratory Records, ORNL R.C.
31-45. Division of Technical Information Extension, AEC
46. Laboratory and University Division, AEC