CENTRAL RESEARCH LIBRARY
DOCUMENT COLLECTION

1

OAK RIDGE NATIONAL LABORATORY
operated by
UNION CARBIDE CORPORATION
NUCLEAR DIVISION
for the
U.S. ATOMIC ENERGY COMMISSION

UNION CARBIDE

ORNL-TM-2625

MARTIN MARIETTA ENERGY SYSTEMS LIBRARIES
3 4456 0135109 3

THE DESIGN AND EVALUATION OF A LABORATORY COLD ROLLING MILL

(Thesis)

James R. Gibson

OAK RIDGE NATIONAL LABORATORY
CENTRAL RESEARCH LIBRARY
DOCUMENT COLLECTION
LIBRARY LOAN COPY
DO NOT TRANSFER TO ANOTHER PERSON
If you wish someone else to see this document, send in name with document and the library will arrange a loan.
UCN-7969
(3 3-67)

A Thesis Presented to the Graduate Council of The University of Tennessee in Partial Fulfillment of the Requirements for the Degree Master of Science.

LEGAL NOTICE

This report was prepared as an account of Government sponsored work. Neither the United States, nor the Commission, nor any person acting on behalf of the Commission:

A. Makes any warranty or representation, expressed or implied, with respect to the accuracy, completeness, or usefulness of the information contained in this report, or that the use of any information, apparatus, method, or process disclosed in this report may not infringe privately owned rights; or

B. Assumes any liabilities with respect to the use of, or for damages resulting from the use of any information, apparatus, method, or process disclosed in this report.

As used in the above, "person acting on behalf of the Commission" includes any employee or contractor of the Commission, or employee of such contractor, to the extent that such employee or contractor of the Commission, or employee of such contractor prepares, disseminates, or provides access to, any information pursuant to his employment or contract with the Commission, or his employment with such contractor.

ORNL-TM-2625

Contract No. W-7405-eng-26

PLANT AND EQUIPMENT DIVISION

THE DESIGN AND EVALUATION OF A LABORATORY COLD ROLLING MILL

James R. Gibson

A Thesis
Presented to
the Graduate Council of
The University of Tennessee

In Partial Fulfillment
of the Requirements for the Degree
Master of Science

OCTOBER 1969

OAK RIDGE NATIONAL LABORATORY
Oak Ridge, Tennessee
operated by
UNION CARBIDE CORPORATION
for the
U. S. ATOMIC ENERGY COMMISSION

MARTIN MARIETTA ENERGY SYSTEMS LIBRARIES
3 4456 0135109 3

ACKNOWLEDGMENTS

The author wishes to express his appreciation to the Oak Ridge National Laboratory* for the use of time and facilities required to complete this thesis.

The author wishes to acknowledge the assistance provided by the Isotopes Division Target Center headed by E. H. Kobisk and the Plant and Equipment Division craft support under the direction of A. W. Herrell. The efforts of Mrs. Ada Misek in typing the manuscript, of Mr. Robert Perry in preparing the drawings, and the editorial assistance of my wife Jo Ann are sincerely appreciated.

*Research sponsored by the United States Atomic Energy Commission under contract with the Union Carbide Corporation.

ABSTRACT

The purpose of this thesis was to perform the design and evaluation of a laboratory cold rolling mill which is used to roll very thin foils of all types of metal isotopes for physics research work. The mill design was based on requirements for rolling sheets of stainless steel to a specified thickness and uniformity. The design emphasis was placed on the backup rolls and work rolls with particular attention to deflection and stress distribution under maximum expected rolling load.

The backup rolls were treated as simply supported beams under a uniformly distributed load. The work rolls were supported by the backup rolls and were set at a small diameter so as to reduce the separating force developed during reduction of the workpiece. The design of the remainder of the rolling mill components was based on the separating force developed at the work rolls.

The evaluation of the rolling mill was performed by rolling several sample sheets of stainless steel to the final required thickness under the condition of maximum reduction. The variation in thickness across these samples which reflected the roll deflection was measured and compared with the maximum roll deflection determined mathematically. These measurements were very close to those predicted by the mathematical treatment. Several more samples were rolled to determine that the requirements on uniformity could be achieved which was also successfully completed.

TABLE OF CONTENTS

SECTION		PAGE
1	STATEMENT OF THE PROBLEM AND INTRODUCTION	1
	The Problem	1
	Determination of Requirements	1
	Present Methods	2
	Design Requirements	3
2	BASIC DESIGN FACTORS	4
	Rolling Load	4
	Rolling Load Factors	4
	Rolls	6
3	ROLL DEFLECTIONS	6
	Backup Rolls	6
	Bending Deflection	6
	Shear Deflection	10
	Maximum Deflection	12
	Work Rolls	19
	General Considerations	19
	Work Roll Deflection Under Maximum Load	20
4	STRESS ANALYSIS OF THE ROLLS	22
	External Forces	22
	Stress Concentrations	23
	Fillets	23
	Contact Stresses	25
	Internal Stress Distribution	28
	Stress Equations	28
	Backup Roll Calculations	32
	Work Roll Calculations	36
	Backup Roll Analysis	37
	Work Roll Analysis	42
5	DESIGN OF THE MILL STAND	43
	General Discussion	43
	Subassembly Design	44
	Backup Roll and Bearing Block Assembly	44

SECTION		PAGE
	Work Roll and Bearing Block Assembly	48
	Screwdown Mechanism Assembly	51
	Mill Stand	57
	Mill Drive	58
6	EVALUATION OF THE MILL	61
	Background	61
	Measurements	62
	Workpiece Variation	62
	Workpiece Uniformity	64
	Discussion of Results	64
7	SUMMARY AND CONCLUSIONS	66
	BIBLIOGRAPHY	69
	APPENDIX A	71
	APPENDIX B	72

LIST OF TABLES

TABLE		PAGE
1.	Typical Materials Rolled	2
2.	Typical Foil Dimensions	2
3.	Backup Roll Bending Stresses	33
4.	Backup Roll Shear Stresses	33
5.	Backup Roll Combined Stresses	35
6.	Work Roll Bending Stresses	38
7.	Work Roll Shear Stresses	38
8.	Work Roll Combined Stresses	39
9.	Workpiece Variation at Maximum Reduction	64
10.	Attainment of Specified Final Thickness	65

LIST OF FIGURES

FIGURE		PAGE
1.	General Sketch of Mill Rolls	3
2.	Typical Work Roll Contact Zone	4
3.	Rolling Load Factors vs. Reduction	6
4.	Beam Diagrams	7
5.	Moment and Shear Diagrams	8
6.	Shear Deflection Diagram	12
7.	Backup Roll Characteristics Under Maximum Load	18
8.	Physical Dimensions of the Backup Roll	19
9.	Characteristics of the Work Roll	21
10.	Physical Dimensions of the Work Roll	22
11.	External Roll Forces	23
12.	Stress Concentration Factor Reference Diagram	24
13.	Parallel Cylinder Contact Stresses	27
14.	Stress Diagrams	29
15.	Backup Roll Load Diagrams	31
16.	Backup Roll Stressed Element	36
17.	Torsion and Bending Shear Stress	40
18.	Maximum Stressed Element in Backup Roll	41
19.	Maximum Stressed Element in Work Roll	42
20.	Mill Stand Assembly	43
21.	Backup Roll Subassembly	45
22.	Work Roll Subassembly	48
23.	Screwdown Mechanism	51

FIGURE PAGE

24. Mill Drive System 59

25. Workpiece Measurements 63

26. Workpiece Thickness Measuring Device 63

27. Workpiece Thickness Variation Comparison as Measured with the Modified Indicator 65

28. The Completed Rolling Mill 67

1. STATEMENT OF THE PROBLEM AND INTRODUCTION

THE PROBLEM

It is the purpose of this thesis to present the design of a small cold-rolling mill, with principal emphasis on roll design and analysis, which can be used in rolling ultra thin foils for use as accelerator targets in physics research work.

The mill will be used by the Isotopes Division Target Center at the Oak Ridge National Laboratory to roll a large variety of metal and rare earth foils to various thicknesses dependent upon the requirements of the particular physics experiment, but often into the range of less than 0.0001-in. thick.

The mill will be used on many materials which are quite reactive in the normal atmosphere and would give better results if handled in an inert atmosphere. Therefore, the mill will be designed to operate in a chamber such as a vacuum glove box which may be evacuated and backfilled with a high purity inert gas.

DETERMINATION OF REQUIREMENTS

The Target Center presently produces a wide variety of foils of metal and rare earth isotopes for physicists all over the world and has successfully used commercial rolling mills in the past. However, present and future demands are being made for foils of thicknesses not readily attainable with these mills.

Ordinarily the foils are in the neighborhood of 1 in.^{2} or less in area due to the high cost of the isotopically pure material. On occasion, however, foils of 3 to 4 in. in width are requested; and, of course, material costs are correspondingly higher so that very little waste may be tolerated.

Present Methods

The material is usually received in powder form from the calutron separation facility at the Y-12 Plant. This is hydraulically pressed into pellet form and then broken down with a mill into a flat form which is then rolled into the final form. Much of the time this flat form is laid between two sheets of stainless steel or plastic before being rolled to the final thickness. This is done to protect the material from the high surface forces exerted by the rolls and any imperfections which might be present in the roll surface.

Table 1 and Table 2 show typical elements which are rolled and typical thicknesses of foils and sandwiching sheets.

Table 1. Typical Materials Rolled[a]

Element	Yield Strength (psi)	Remarks
Aluminum	15,400	75% cold rolled
Beryllium	60,000	Rolled powder
Calcium	12,300	Rolled
Chromium	12,000	Ultimate tensile strength Room temperature
Cobalt	56,100	
Copper	65,000	90% cold rolled
Iron	29,000	Trace carbon
Hafnium	33,600	
Magnesium	17,600	Compressive
Molybdenum	90,000	
Plutonium	60,000	Compressive
Tin	2,400	Annealed sheet
Uranium	28,000	
Yttrium	53,000	Worked
Zirconium	75,000	58% cold worked

[a]American Society for Metals, Metals Handbook, 2 Vols., (American Society for Metals, Metals Park, Ohio, 1964).

Table 2. Typical Foil Dimensions

Element[a]	Weight (mg/cm^2)	Foil Thickness (in.)	Sandwich Thickness[b] (in.)
^{57}Fe	1.9	0.000095	0.011
Normal copper	1.9	0.000084	0.008
^{91}Zr	0.5	0.000031	0.013
^{92}Zr	0.5	0.000031	0.005
Normal erbium	3.4	0.00013	0.0029
^{120}Sn	4.8	0.00033	0.011
^{91}Zr	0.24	0.000014	0.004
Normal cobalt	9.38	0.00042	0.011
^{57}Fe	1.9	0.000095	0.004
^{48}Ti	0.5	0.000043	0.008
^{50}Ti	0.5	0.000043	0.007

[a]Iron-57 defines the iron isotope of atomic mass number 57.

[b]Sandwich material is type 304L stainless steel--0.035 in. thick sheet before rolling--2 sheets.

It can be seen that the thickness of the sandwiching sheets is many times the foil thickness; and, in fact, the foil thickness may be neglected when selecting an ultimate thickness requirement for the mill. It must also be remembered that many relatively thick foils in the 0.005-0.025-in.-thick range are rolled without the sandwich sheets.

Design Requirements

The basic design requirements of the mill can be determined by deciding on a final thickness and width of some given foil material. The ultimate thickness is set at 0.0005 in. with a maximum variation in thickness of 10%, and the roll face width is set at 4 in. Type 304L stainless steel is chosen as the design workpiece because when using the sandwich the final thickness is largely due to the sandwich thickness. During rolling, the foil is usually passed through the mill several times; therefore, the stainless-steel sandwich can be considered to be in a fully work-hardened condition.

For simplicity a four-high type of mill is chosen with small diameter work rolls and relatively large diameter backup rolls. The work roll material best suited to thin foil rolling is tungsten carbide (11)* due to its high modulus of elasticity and compressive strength which result in lower separating forces when compared to steel for a given reduction. The back-up roll can be made from an alloy steel of suitable properties.

The design of the mill stand including bearings and screwdown mechanism should be undertaken, keeping in mind the requirements that the mill be operated in an inert atmosphere enclosure. Figure 1 shows the relationship of the rolls and the workpiece.

ORNL DWG. 68-7843

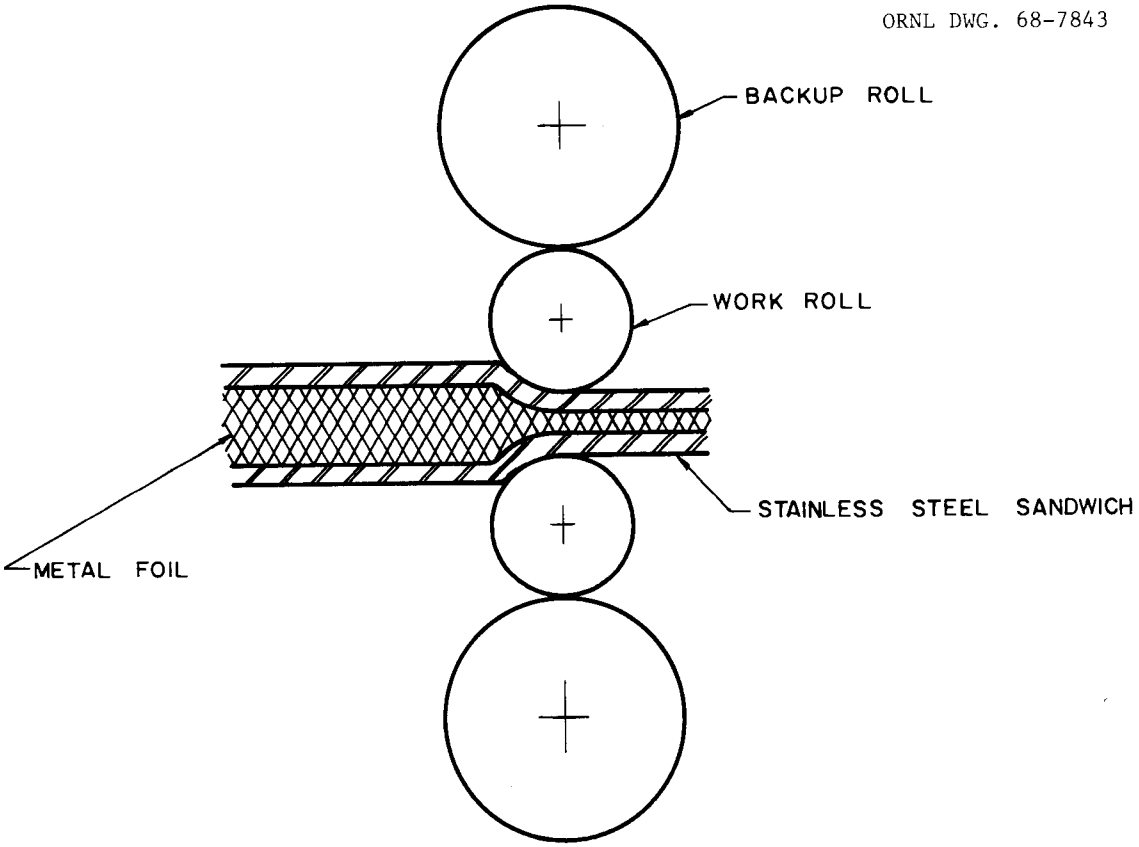

Fig. 1. General Sketch of Mill Rolls.

*See Bibliography at end of report.

2. BASIC DESIGN FACTORS

ROLLING LOAD

The purpose of this section is to determine what forces are applied to the rolls as a result of reducing a sheet of stainless steel to the required thickness and to determine what roll diameters may be used to perform the reduction.

Literature published by the metal working industry (2-5) can be used to determine such factors as roll separating force, roll driving torque and peak pressure in the zone of contact between the roll and the workpiece as a function of work roll diameter, reduction in the workpiece thickness, physical properties of the rolls and the workpiece and the coefficient of friction between the work roll and the workpiece.

The roll diameters are nominally selected based on published information regarding the work roll and what is considered to be practical for the backup roll from the point of view of observation of the workpiece. The deflections based on these diameters can be determined analytically and by experiment and the steps necessary to achieve the required uniformity in the workpiece can be predicted. Figure 2 shows a diagram of the contact zone (2).

ORNL DWG. 69-2311

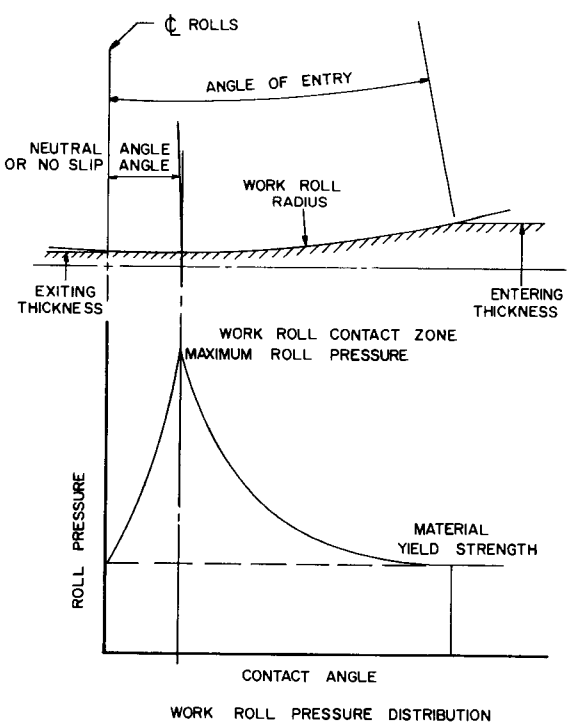

Fig. 2. Typical Work Roll Contact Zone

Rolling Load Factors

The primary factors affecting the rolling mill design are the separating force or vertical force exerted on the work roll by the workpiece during reduction, the maximum contact pressure exerted on the work rolls in the contact zone and the torque which must be applied to the work roll in order to feed the workpiece through the rolls. These factors may be determined through the use of information developed by the metal working industry (2-5, 21) knowing work roll diameter coefficient of friction for the materials involved and the physical properties of the work roll and workpiece material.

The work roll diameter for this project is selected on the basis of existing work roll diameters used to roll material into this thickness range (these are Sendzimir mills which cannot be used for this application) (20), empirical ratios of

material thickness to diameter of the roll (20, 21) and the availability of standard bearings which can be used as work roll neck bearings. Considering these factors, the work roll diameter is set at 0.5 in.

The coefficient of friction between the work roll and stainless steel workpiece was determined experimentally by measuring the maximum gripping angle (2) of an existing mill equipped with tungsten carbide work rolls. The coefficient was found to range from 0.065 to 0.068 so a value of 0.07 was used in the determination of the rolling load factors.

The maximum angle of contact may be determined from the relationship (2)

$$\alpha = \tan^{-1}\mu,$$

where

$$\begin{aligned} \alpha &= \text{contact angle} \\ &= \tan^{-1}(0.07) \\ &= 4.04^\circ, \\ \mu &= \text{coefficient of friction.} \end{aligned} \tag{2.1}$$

From this the maximum reduction may be found from the relationship (2)

$$\Delta t = R\sin^2\alpha, \tag{2.2}$$

where

$$\begin{aligned} t &= \text{thickness of workpiece, in.} \\ R &= \text{work roll radius, in.} \\ \Delta t &= (0.25)\sin^2 4.04^\circ \\ &= 0.00121 \text{ in.} \end{aligned}$$

From these calculations it is established that the maximum entering thickness under the conditions stated for a final thickness of 0.0005 in. is 0.0017 in.

Figure 3 shows the rolling load factors of importance in evaluating the performance of a rolling mill under the conditions which have been stated. The separating force, torque and maximum pressure are shown versus the entering thickness of the workpiece based on the final desired thickness of 0.0005 in. These factors may be used in determining what maximum reduction must be chosen in order to obtain the desired uniformity in the finished workpiece and they may also be used to determine what maximum stresses will occur in the mill components.

ORNL DWG. 69-2312

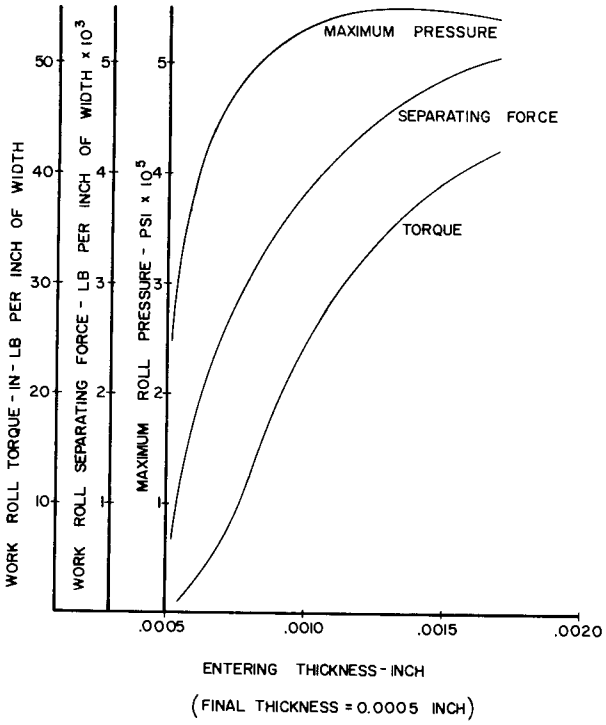

Fig. 3. Rolling Load Factors vs. Reduction

ROLLS

As stated in Section 1, the mill is to be of the four-high type using small work rolls for achievement of the desired thickness and large backup rolls for the purpose of keeping the deflection of the work rolls to a minimum or the uniformity of the workpiece to a maximum. As discussed in the preceding section, the work roll diameter has been chosen as 0.5 in. The limiting factor in the selection of the backup roll diameter is visibility of the work rolls, because so many of the foils rolled are of such small area that they may become difficult to handle if they cannot be easily observed during rolling. From experience with other larger mills, it is decided that a diameter in the neighborhood of four inches is the maximum which can be tolerated. This diameter can be adjusted slightly to make use of standard bearing sizes for the roll necks.

3. ROLL DEFLECTIONS

BACKUP ROLLS

The purpose of Section 3 is to determine the mathematical relationships between the rolling loads and roll deflections. From these relationships the workpiece uniformity and roll stresses can be determined and analyzed. The basic purposes of the backup roll are to limit deflection and transmit the driving torque to the work roll. This roll is considered to act as a simply supported beam of variable cross section under the influence of a partial uniform load. Deflections are determined as a function of both bending and shear since the roll is rather short in length compared to its diameter (7). Deflections will be determined by the moment area method and because of the large variety of thicknesses and types of material to be rolled, no consideration will be given to the use of crowned rolls.

Bending Deflection

The determination of the bending deflection of the backup roll is based on the sketches in Fig. 4 which show the roll as a beam and also show the

ORNL DWG. 69-2313

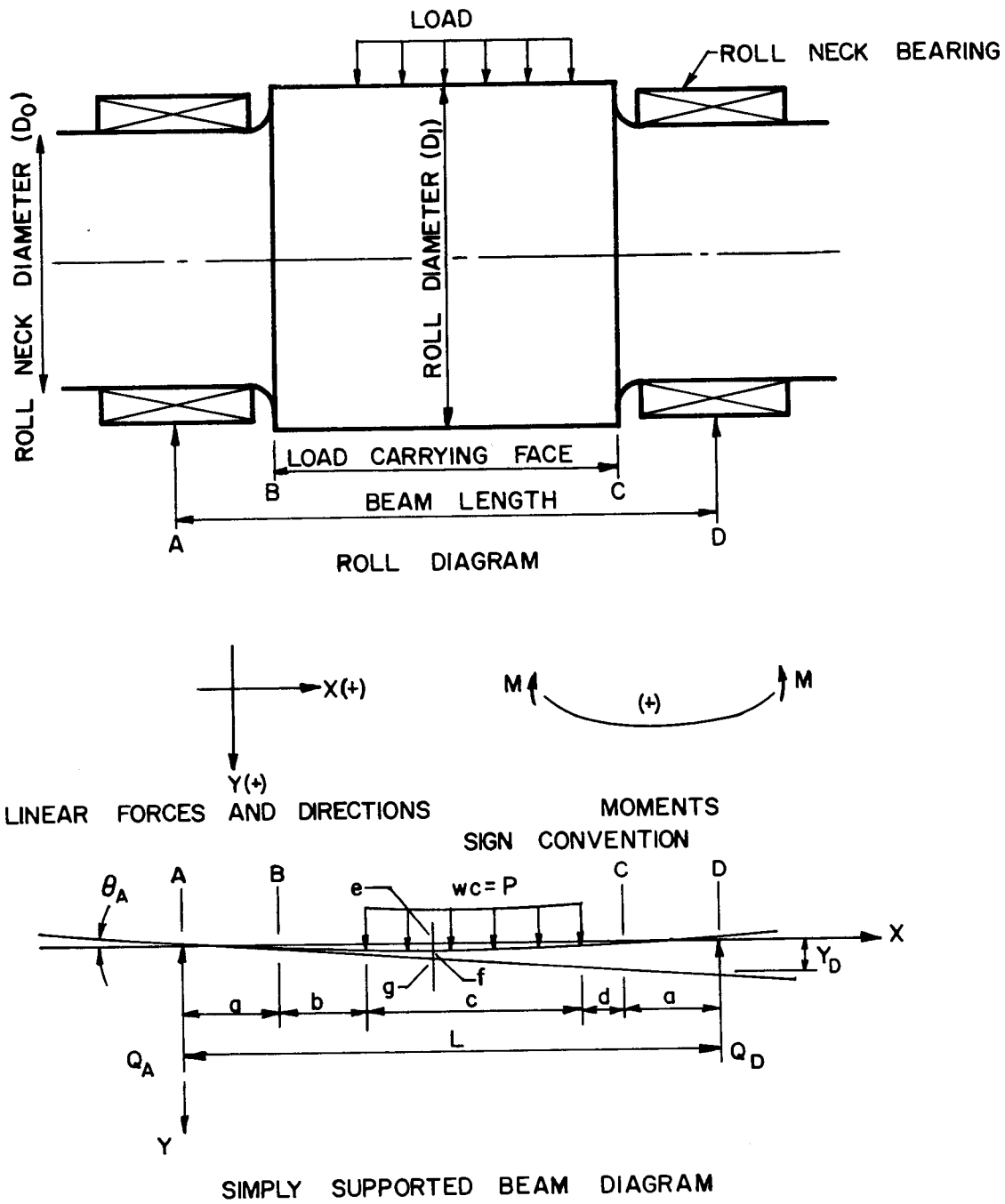

Fig. 4. Beam Diagrams

sign convention. Figure 5 shows the shear and moment diagrams for such a beam. The symbols used in Figs. 4 and 5 and in the equations which follow are defined below:

E	=	modulus of elasticity, psi,
I	=	moment of inertia, in.^{4}, $I = \frac{\pi}{4} R^4$ for a circular section,
L	=	beam length, in.,
M	=	bending moment at any point, in.-lb.,
P	=	total load on beam, lb.,
R	=	roll radius, in.,
Q	=	end reaction, lb.,
V	=	shear force, lb.,
a, b, c, etc.	=	various dimensions,
w	=	unit load, lb./in.,
x, y	=	coordinates,
0	=	roll neck diameter,
1	=	load face diameter.

ORNL DWG. 69-2314

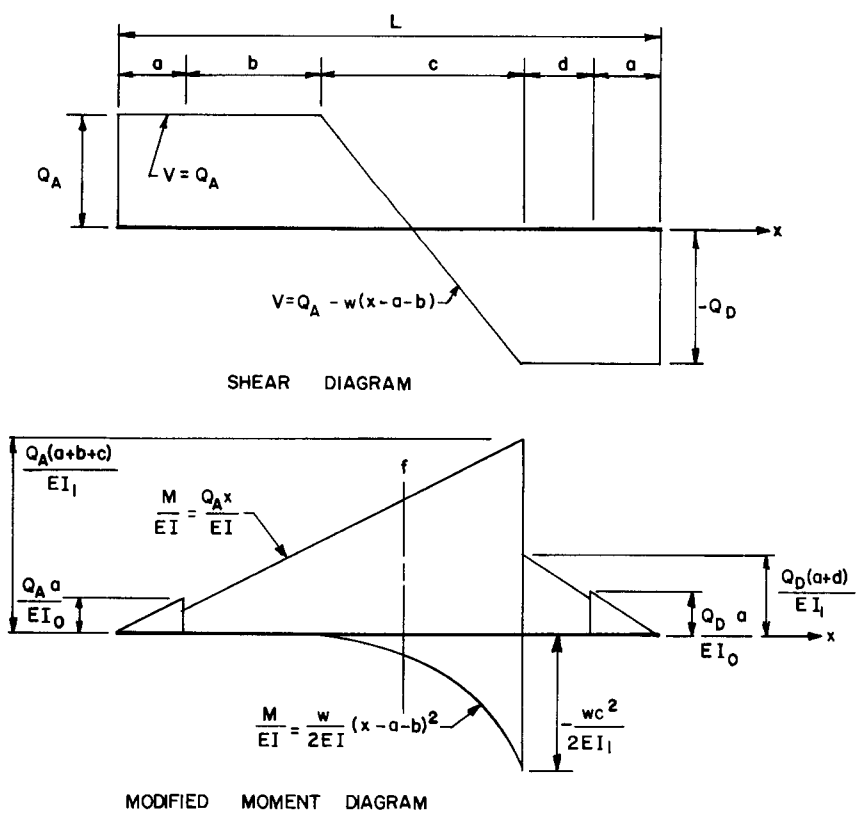

Fig. 5. Moment and Shear Diagrams

The end reactions may be found by summing the moments about either end and solving for the reaction

$$Q_A = P\,\frac{(a + d + \frac{c}{2})}{L}, \tag{3.1}$$

$$Q_D = P\,\frac{(a + b + \frac{c}{2})}{L}. \tag{3.2}$$

The deflection of interest is that across the applied load which represents the workpiece uniformity. The deflection at some point on the backup roll is found using the moment area method (7) based on the modified bending diagram shown in Fig. 5. The deflection of some point (f) on the beam, Fig. 4, can be calculated as follows.

The deflection of the line tangent to the beam at A from point D is found by taking the moment of the entire moment diagram about a vertical thru D.

$$y_D = \frac{Q_A a}{EI_o}\left(\frac{a}{2}\right)\left(L - \frac{2}{3}a\right) + \frac{Q_A a}{EI_1}(b + c)\left(\frac{b + c}{2} + d + a\right) + \frac{Q_A}{EI_1}(b + c)\left(\frac{b + c}{2}\right)$$

$$\left(\frac{b + c}{3} + d + a\right) - \frac{wc^2}{2EI_1}\left(\frac{c}{3}\right)\left(\frac{c}{4} + d + a\right) + \frac{Q_D a}{EI_1}(d)\left(\frac{d}{2} + a\right)$$

$$+ \frac{Q_D d}{EI_1}\left(\frac{d}{2}\right)\left(\frac{2}{3}d + a\right) + \frac{Q_D a}{EI_o}\left(\frac{a}{2}\right)\left(\frac{2}{3}a\right)$$

$$y_D = \frac{Q_A a^2 L}{2EI_o} + \frac{Q_A a(b + c)}{EI_1}\left(\frac{b + c}{2} + d + a\right) + \frac{Q_A (b + c)^2}{2EI_1}\left(\frac{b + c}{3} + d + a\right)$$

$$- \frac{wc^3}{6EI_1}\left(\frac{c}{4} + d + a\right) + \frac{Q_D ad}{EI_1}\left(\frac{d}{2} + a\right) + \frac{Q_D d^2}{2EI_1}\left(\frac{2}{3}d + a\right). \tag{3.3}$$

The deflection $(\overline{eg})$ is found by proportion

$$\overline{eg} = y_D\left(\frac{x}{L}\right). \tag{3.4}$$

The deflection $(\overline{fg})$ is found by taking the moment of the diagram area to the left of the $\overline{efg}$ about the vertical line $\overline{efg}$:

$$\overline{fg} = \frac{Q_A a}{EI_o}\left(\frac{a}{2}\right)\left(x - \frac{2}{3}a\right) + \frac{Q_A a}{EI_1}(x - a)\left(\frac{x - a}{2}\right) + \frac{Q_A}{EI_1}(x - a)\left(\frac{x - a}{2}\right)$$

$$\left(\frac{x - a}{3}\right) - \frac{w}{2EI_1}(x - a - b)^2\left(\frac{x - a - b}{3}\right)\left(\frac{x - a - b}{4}\right)$$

$$\overline{fg} = \frac{Q_A a^2}{2EI_o}\left(x - \frac{2}{3}a\right) + \frac{Q_A a}{2EI_1}(x - a)^2 + \frac{Q_A}{6EI_1}(x - a)^3$$

$$- \frac{w}{24EI_1}(x - a - b)^4. \qquad (3.5)$$

The deflection of the point (f) on the beam can now be found:

$$\overline{ef} = \overline{eg} - \overline{fg}\,. \qquad (3.6)$$

The slope of the beam at some point may be found using the area of the moment diagram. The slope of the beam at point A is

$$\left(\frac{dy}{dx}\right)_A = \theta_A = \frac{y_D}{L}\,. \qquad (3.7)$$

The slope of the beam at any point relative to the tangent line of A is equal to the area of the moment diagram between point A and the point in question. Using the point (f) again as the point of interest,

$$\left(\frac{dy}{dx}\right)_{f/A} = \theta_{f/A} = \frac{Q_A a}{EI_o}\left(\frac{a}{2}\right) + \frac{Q_A a}{EI_1}(x - a) + \frac{Q_A}{EI_1}(x - a)\left(\frac{x - a}{2}\right)$$

$$- \frac{w}{2EI_1}(x - a - b)^2\left(\frac{x - a - b}{3}\right)$$

$$\theta_{f/A} = \frac{Q_A a^2}{2EI_o} + \frac{Q_A a}{EI_1}(x - a) + \frac{Q_A}{2EI_1}(x - a)^2 - \frac{w}{6EI_1}(x - a - b)^3. \qquad (3.8)$$

The slope at point (f) on the beam relative to the horizontal line AD is the difference in these two angles:

$$\theta_f = \theta_A - \theta_{f/A}. \qquad (3.9)$$

The point of maximum deflection is that point where the slope of the beam is horizontal or where $\theta_A = \theta_{f/A}$. The magnitude of the maximum deflection can be determined by solving for the value of x for which the slope is horizontal and using this in equations (2.3) thru (2.6).

Shear Deflection

The deflection due to shearing force alone can be determined by the use of known mathematical and graphical methods (7). These methods are based on the equation for the elastic curve for shear

$$\frac{d^2y}{dx^2} = \frac{kdV}{AG} = \frac{kw}{AG} \tag{3.10}$$

where, in addition to those symbols already used,

k = shear constant, $k = \frac{4}{3}$ for a circular section

A = cross sectional area, in.^{2}

G = shear modulus, psi.

For the unloaded portion of the beam where the shear force is constant the equation is used in the form (7)

$$\frac{dy}{dx} = \frac{kQ}{AG}. \tag{3.11}$$

This expression defines a constant slope from which the deflection can be determined by multiplying slope by distance from the end reaction. Using equations (3.1) and (3.2), the slope at either end may be expressed as follows:

$$\text{at the left hand end, } \frac{dy}{dx} = \frac{kP}{LAG}\left(a + d + \frac{c}{2}\right) \tag{3.12}$$

$$\text{at the right hand end, } \frac{dy}{dx} = \frac{-kP}{LAG}\left(a + b + \frac{c}{2}\right). \tag{3.13}$$

The deflection along the loaded portion of the beam can be found by using a method comparable to the moment area method used to determine bending deflection. Figure 6 shows a shear diagram (7) equivalent to the bending moment diagram in Fig. 5. For simplicity the horizontal coordinate $x' = x - (a + b)$ is used over the length of the load.

The determination of the deflection of some point (f) is undertaken just as it was done for bending. The deflection of the line tangent to the beam at point 1 relative to point 2 is equal to the moment of the diagram about point 2 or

$$y_2 = \frac{kw}{AG}(c)\left(\frac{c}{2}\right) = \frac{kwc^2}{2AG}. \tag{3.14}$$

The deflection $\overline{eg}$ is found by proportion:

$$\overline{eg} = y_2\left(\frac{x'}{c}\right) = \frac{kwcx'}{2AG}. \tag{3.15}$$

The deflection $(\overline{fg})$ relative to the tangent line is found by taking the moment of the diagram area to the left of $\overline{efg}$ about $\overline{efg}$:

$$\overline{fg} = \frac{kw}{AG}(x')\left(\frac{x'}{2}\right) = \frac{kw(x')^2}{2AG}. \tag{3.16}$$

The desired deflection $(\overline{ef})$ can now be determined:

$$\overline{ef} = \overline{eg} - \overline{fg} = \frac{kwcx'}{2AG} - \frac{kw(x')^2}{2AG} = \frac{kw}{2AG}(cx' - x'^2). \tag{3.17}$$

ORNL DWG. 69-2315

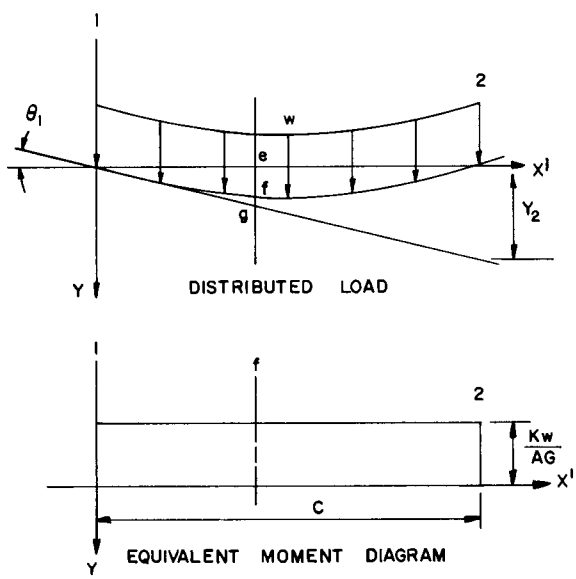

Fig. 6. Shear Deflection Diagram

This deflection is of course relative to the point x = a + b and must be added to the deflection of the unloaded portion of the beam to find the total deflection.

The slope of the beam along the loaded portion is also found similarly to the bending method. The slope at point (1) is

$$\left(\frac{dy}{dx}\right)_1 = \theta_1 = \frac{y_2}{c} = \frac{kwc}{2AG}. \tag{3.18}$$

The slope at any point relative to the tangent line at (1) is

$$\left(\frac{dx}{dy}\right)_{f/1} = \theta_{f/1} = \frac{kwx'}{AG}. \tag{3.19}$$

The slope at any point relative to the horizontal is then

$$\theta_f = \theta_1 - \theta_{f/1} = \frac{kw}{AG}\left(\frac{c}{2} - x'\right). \tag{3.20}$$

The total deflection or slope at any point along the length of the backup roll can now be determined by combining the bending and shear expressions determined above.

Maximum Deflection

Of particular interest is that condition where the rolls are subjected to the maximum loading across the entire roll load face. At maximum loading the maximum stresses occur and can be evaluated. The deflection at maximum workpiece width can be determined and the maximum workpiece reduction in order to achieve the desired workpiece uniformity can be predicted. Calculation of slope and deflection due to bending will be calculated followed by the calculation of slope and deflection of the roll due to shear alone.

Due to the application of maximum workpiece width, the end reactions are symmetrical and each equal to half the total applied load, the dimensions (b) and (d) are both equal to zero and the maximum deflection occurs at the center of the span. From Fig. 3 the maximum unit loading or separating force is

$$w = 5080 \text{ lb/in.}$$

therefore,

$$P = wc = 5080\ (4) = 20,320 \text{ lb.}$$

and

$$Q_A = Q_D = Q = 10,160 \text{ lb.}$$

Equations (3.3) to (3.6) are used to determine the deflection of the midpoint ($x = \frac{L}{2}$) due to bending as follows:

$$y_D = \frac{Q_A a^2 L}{2EI_o} + \frac{Q_A ac}{EI_1}\left(a + \frac{c}{2}\right) + \frac{Q_A c^2}{2EI_1}\left(a + \frac{c}{3}\right) - \frac{wc^3}{6EI_1}\left(a + \frac{c}{4}\right)$$

$$\overline{eg} = y_D\left(\frac{L}{2}/L\right) = \frac{y_D}{2} = \frac{Q_A a^2 L}{4EI_o} + \frac{Q_A ac}{2EI_1}\left(a + \frac{c}{2}\right) + \frac{Q_A c^2}{4EI_1}\left(a + \frac{c}{3}\right)$$

$$- \frac{wc^3}{12EI_1}\left(a + \frac{c}{4}\right)$$

$$\overline{fg} = \frac{Q_A a^2}{2EI_o}\left(\frac{L}{2} - \frac{2}{3}a\right) + \frac{Q_A a}{2EI_1}\left(\frac{L}{2} - a\right)^2 + \frac{Q_A}{GEI_1}\left(\frac{L}{2} + a\right)^3$$

$$- \frac{w}{24EI_1}\left(\frac{L}{2} - a\right)^4.$$

Substituting for $\frac{L}{2} = a + \frac{c}{2}$,

$$\overline{fg} = \frac{Qa^2}{2EI_o}\left(\frac{a}{3} + \frac{c}{2}\right) + \frac{Q_A c^3}{8EI_1} + \frac{Q_A c^3}{48EI_1} - \frac{wc^4}{384EI_1}$$

$$\overline{ef} = \overline{eg} - \overline{fg} = \frac{Q_A a^2 L}{4EI_o} + \frac{Q_A acL}{4EI_1} + \frac{Q_A c^2}{4EI_1}\left(a + \frac{c}{3}\right) - \frac{wc^3}{12EI_1}\left(a + \frac{c}{4}\right)$$

$$- \frac{Qa^2}{2EI_o} \left(\frac{a}{3} + \frac{c}{2}\right) - \frac{Q_A ac^2}{8EI_1} - \frac{Q_A c^3}{48EI_1} + \frac{wc^4}{384EI_1}$$

$$\overline{ef} = (y)\frac{L}{2} = \frac{Q_A a^3}{3EI_o} + \frac{Q_A}{2EI_1}\left(ac^2 + \frac{3}{4}ac^2 + \frac{c^3}{8}\right) - \frac{wc^3}{12EI_1}\left(a + \frac{7}{32}c\right). \qquad (3.21)$$

To determine the deflection across the workpiece, it is necessary to find the deflection at x = a (point B) which is the workpiece edge or roll load face edge.

The proportional deflection $\overline{eg}$ is found:

$$\overline{eg} = y_D\left(\frac{a}{L}\right) = \frac{Q_A a^3}{2EI_o} + \frac{Q_A a^2 c}{EI_1 L}\left(a + \frac{c}{2}\right) + \frac{Q_A ac^2}{2EI_1 L}\left(a + \frac{c}{3}\right) - \frac{wac^3}{6EI_1 L}\left(a + \frac{c}{4}\right)$$

$$\overline{fg} = \frac{Q_A a}{EI_o}\left(\frac{a}{2}\right)\left(\frac{a}{3}\right) = \frac{Q_A a^3}{6EI_o}$$

$$\overline{ef} = (y)_B = \frac{Q_A a^3}{2EI_o} + \frac{Q_A a^2 c}{EI_1 L}\left(a + \frac{c}{2}\right) + \frac{Q_A ac^2}{2EI_1 L}\left(a + \frac{c}{3}\right) - \frac{wac^3}{6EI_1 L}\left(a + \frac{c}{4}\right) - \frac{Q_A a^3}{6EI_o}$$

$$(y)_B = \frac{Q_A a^3}{3EI_o} + \frac{Q_A ac}{EI_1 L}\left(a^2 + ac + \frac{c^2}{6}\right) - \frac{wac^3}{6EI_1 L}\left(a + \frac{c}{4}\right). \qquad (3.22)$$

The variation in the workpiece thickness can then be found as the difference:

$$\text{Variation} = (y)_{\frac{L}{2}} - (y)_B. \qquad (3.23)$$

The deflection due to shear under the maximum loading as described above can be found using equations (3.14) to (3.17).

The deflection at $x = \frac{L}{2}$ or $x' = \frac{c}{2}$ of $\overline{eg}$ is

$$\overline{eg} = y_2\left(\frac{l}{2}\right) = \frac{kwc^2}{4A_1 G}$$

$$\overline{fg} = \frac{kw}{2A_1 G}\left(\frac{c}{2}\right)^2 = \frac{kwc^2}{8A_1 G}$$

$$\overline{ef} = (y)_{\frac{c}{2}} = \overline{eg} - \overline{fg} = \frac{kwc^2}{8A_1G} . \tag{3.24}$$

This deflection represents that across the workpiece directly. The deflection of the unloaded portion at point B can be found using equation (3.12):

$$(y)_B = (\frac{dy}{dx})a = \frac{kP}{LA_oG} (a + d + \frac{c}{2})a = \frac{kP}{LA_oG} (\frac{L}{2})a = \frac{k\ Pa}{2A_oG} . \tag{3.25}$$

The total deflection of the backup roll across the workpiece of maximum width, $(y)_{w.p.}$, can now be determined from equations (3.21), (3.22), and (3.24):

$$(y)_{w.p.} = \left[(y)_{\frac{L}{2}} - y_B\right]_{Bending} + \left[(y)_{\frac{L}{2}}\right]_{Shear}$$

$$(y)_{w.p.} = \left[\frac{Q_A a^3}{3EI_o} + \frac{Q_A}{2EI_1} (a^2c + \frac{3}{4} ac^2 + \frac{c^3}{8}) - \frac{wc^3}{12EI_1} (a + \frac{7}{32} c)\right]$$

$$- \left[\frac{Q_A a^3}{3EI_o} + \frac{Q_A ac}{EI_1L} (a^2 + ac + \frac{c^2}{6}) - \frac{wac^3}{6EI_1L} (a + \frac{c}{4})\right] + \frac{kwc^2}{8A_1G}$$

$$(y)_{w.p.} = \frac{Q_A}{EI_1}\left[\frac{a^2c}{2} + \frac{3}{8} ac^2 + \frac{c^3}{16} - \frac{a^3c}{L} - \frac{a^2c^2}{L} - \frac{ac^3}{6L}\right] - \frac{wc^3}{12EI_1}$$

$$\left[a + \frac{7}{32} c - \frac{2a^2}{L} - \frac{ac}{2L}\right] + \frac{kwc^2}{8A_1G} . \tag{3.26}$$

By setting a value for the backup roll face and neck diameters, the corresponding deflection can be calculated. In Section 2 it was stated that the backup roll diameter should be chosen in the neighborhood of 4 in. Nominal selection of a bearing which is suitable for this size roll and will carry the end reaction previously calculated results in the following choice (12):

> "Torrington Model GB-5628 Needle Roller Bearing (4 in. o.d., 3 1/2 in. i.d., 1 3/4 in. long, 22,700 lb. basic dynamic capacity)."

The roll neck diameter is now set at 3-1/2 in. dia and the load face is set at 4-1/4 in. to allow some clearance for bearing housings. The other dimensions are determined by putting the end reaction points at the center of the bearing length and allowing 1/8 in. for the change in section between the roll neck and roll face. The result is the following list of dimensions:

$$a = 1/8 + (1\ 3/4)\ 1/2 = 1 \text{ in.}$$
$$b = 0$$
$$c = 4 \text{ in.}$$
$$d = 0$$
$$L = 6 \text{ in.}$$
$$R_o = 1/2\ (3\ 1/2) = 1\ 3/4 \text{ in.}$$
$$R_1 = 1/2\ (4\ 1/4) = 2\ 1/8 \text{ in.}$$

The following sectional properties can be calculated:

$$I_o = \frac{\pi}{4} R_o^4 = \frac{\pi}{4} (1\ 3/4)^4 = 7.366 \text{ in.}^4$$

$$I_1 = \frac{\pi}{4} R_1^4 = \frac{\pi}{4} (2\ 1/8)^4 = 16.015 \text{ in.}^4$$

$$A_o = \pi R_o^2 = \pi(1\ 3/4)^2 = 9.621 \text{ in.}^2$$

$$A_1 = \pi R_1^2 = \pi(2\ 1/8)^2 = 14.186 \text{ in.}^2$$

The modulus of elasticity is $E = 30 \times 10^6$ psi and the shear modulus $G = 12 \times 10^6$ psi. The deflection equation can be simplified by inserting the preceding numerical values into equation (3.26):

$$(y)_{w.p.} = \frac{Q_A}{(30 \times 10^6)(16.015)} \left[\frac{(1)^2 4}{2} + \left(\frac{3}{4}\right) \frac{1(4)^2}{2} + \frac{(4)^3}{16} - \frac{(1)^3 4}{6} - \frac{(1)^2(4)^2}{6} - \frac{1(4)^3}{6(6)} \right] - \frac{w(4)^3}{12(30 \times 10^6)(16.015)} \left[1 + \left(\frac{7}{32}\right) 4 - \frac{2(1)^2}{6} - \frac{1(4)}{2(6)} \right] + \frac{\frac{4}{3} w(4)^2}{8(14.186)(12 \times 10^6)}$$

$$(y)_{w.p.} = Q_A \left(\frac{6.888}{480.45 \times 10^6}\right) - w \left(\frac{6.443}{480.45 \times 10^6}\right) + w \left(\frac{5.333}{340.45 \times 10^6}\right)$$

$$(y)_{w.p.} = Q_A \ (0.014338 \times 10^{-6}) + w \ (0.00225 \times 10^{-6}).$$

Because of the condition of symmetry,

$$Q_A = \frac{wc}{2} = 2 \ w$$

therefore,

$$(y)_{w.p.} = 2 \ w \ (0.014338 \times 10^{-6}) + w \ (0.00225 \times 10^{-6})$$

$$(y)_{w.p.} = w \ (0.030986 \times 10^{-6}). \qquad (3.27)$$

Under conditions of maximum reduction of the workpiece, Fig. 3, w = 5080 lb./in. and,

$$(y)_{w.p.} = 5080 \ (0.030986 \times 10^{-6}) = 0.0001574 \text{ in.}$$

Based on a desired final thickness of 0.0005 in., this is equivalent to a variation of

$$\frac{2(0.0001574) \ (100)}{0.0005} = 62.96\%$$

remembering that both upper and lower rolls deflect about the workpiece. This obviously is a much greater variation than was stated in Section 1 and must be reduced. This can be done by determining what maximum reduction or equivalent unit load would result in an acceptable uniformity.

The desired uniformity of 10% results in a deflection of

$$(y)_{w.p.} = \left(\frac{1}{2}\right)(0.0005)\left(\frac{10}{100}\right) = 0.000025 \text{ in.}$$

Using equation (3.27) the unit load is found to be

$$w = \frac{(y)_{w.p.}}{(0.030986 \times 10^{-6})} = \frac{(0.000025)}{(0.030986 \times 10^{-6})}$$

$$w = 807 \text{ lb./in.}$$

Referring again to Fig. 3, it can be seen that this corresponds to a reduction of 0.000034 in. or less at the final pass to achieve the desired uniformity.

Briefly summarizing the above, it is seen that under the maximum possible reduction, based on an exit thickness of the workpiece of 0.0005 in., the deflection of the backup rolls is too great to allow the desired uniformity. However, subsequent reductions of lesser magnitude will allow the desired uniformity to be achieved.

In performing the workpiece reduction, the rolls are subjected to various stresses. These stresses are analyzed in the following section and are based on the maximum loading which corresponds to that for which the maximum deflection was determined above. Figure 7 shows the characteristics of the backup roll under the influence of this maximum loading for one half the roll length and includes shear, moment, slope and deflection curves. Figure 8 shows the dimensional characteristics of the backup roll.

ORNL DWG. 69-2316

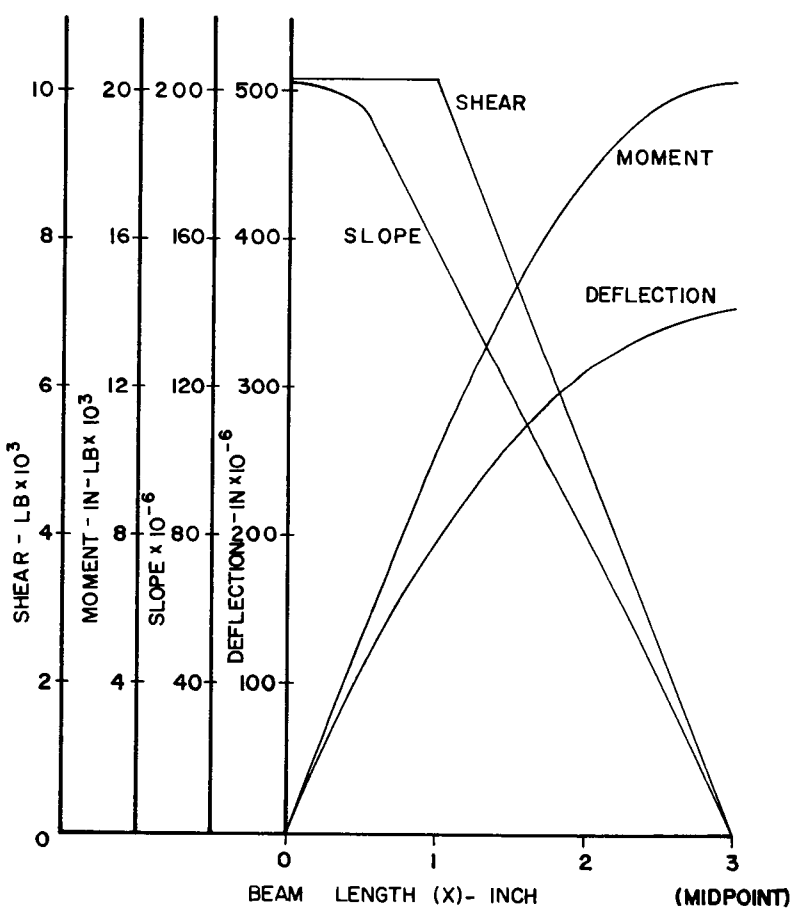

Fig. 7. Backup Roll Characteristics Under Maximum Load

ORNL DWG. 68-7850

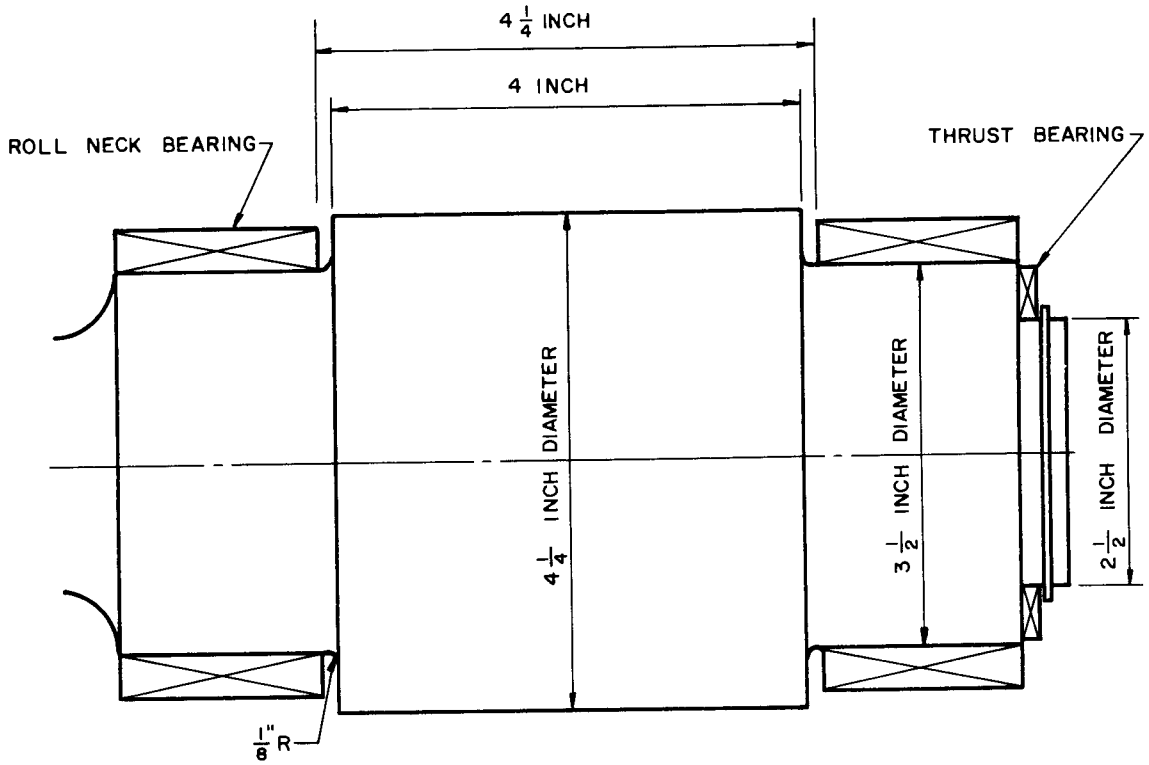

Fig. 8. Physical Dimensions of the Backup Roll

Mention should be made of the fact that though the backup roll was considered a simply supported beam, the end reactions act at the midpoint of the roll neck bearings which do have a certain length. The slope along this portion of the beam is very close to being constant and since such things as manufacturing tolerances may allow some variation within the bearing, this will be considered not to alter the calculated results.

Another factor to be considered is the possibility of a thrust load. Although there is no axial component of the separating force, there may exist some thrust due to misalignment or some unforeseeable cause. As a factor of safety, a thrust bearing is included in the design and is fully discussed in Section 5.

WORK ROLLS

General Considerations

The work roll diameter was selected in Section 2 as a part of the determination of the rolling load. Because the work roll is so much smaller in diameter than the backup roll, it is expected to follow the deflection of the backup roll within the loaded portion of the load face. The

unloaded portions of the work roll are free to move vertically and their slope and deflection characteristics are determined by the conditions at the extremities of the loaded portion. The moment and shear distribution in the loaded portion of the work roll are determined by the backup roll deflection and slope in this area.

Work Roll Deflection Under Maximum Load

The condition of maximum loading as discussed in the preceding section is the condition under which maximum roll stresses occur and is therefore of interest. The deflection of the work roll alone under maximum loading is checked to insure that it would exceed that of the backup roll if the backup roll were not present. The deflection is calculated in terms of bending only because this condition will predict maximum expected bending moment and therefore the maximum stresses in the work roll. Work roll bearings are nominally selected on dimensional requirements as (12)

> "Torrington Model GB-47 Needle Roller Bearing (7/16 in. o.d., 1/4 in. i.d., 7/16 in. long, 791 lb. basic dynamic capacity)."

The modulus of elasticity of the tungsten carbide work roll is $E = 91.6 \times 10^6$ psi (11).

The moments of inertia are

$$I_o = \frac{\pi}{4} R_o^4 = \frac{\pi}{4} \left(\frac{1}{8}\right)^4 = 0.000192 \text{ in.}^4$$

$$I_1 = \frac{\pi}{4} R_1^4 = \frac{\pi}{4} \left(\frac{1}{4}\right)^4 = 0.003068 \text{ in.}^4$$

The other constants involved are as follows:

$$w = 5080 \text{ lb./in.}$$

$$Q = 2\,w$$

$$a = \frac{11}{32} \text{ in.}$$

$$c = 4 \text{ in.}$$

$$L = 4\,\frac{11}{16} \text{ in.}$$

The deflection is found in terms of bending only as mentioned above and is based on equation (3.26) as follows:

$$(y)_{w.p.} = \frac{Q}{EI_1}\left(\frac{a^2c}{2} + \frac{3}{8}ac^2 + \frac{c^3}{16} - \frac{a^3c}{L} - \frac{a^2c^2}{L} - \frac{ac^3}{6L}\right)$$

$$- \frac{wc^3}{12EI_1}\left(a + \frac{7}{32}c - 2\frac{a^2}{L} - \frac{ac}{2L}\right). \qquad (3.28)$$

$$(y)_{w.p.} = 0.0791 \text{ in.}$$

This value is much greater than would be allowed by the backup roll. The moment and shear values of the work roll along the load carrying face can be determined using the slope and deflection curves of the backup roll.

The bending moment values for the work roll are found by measuring the slope of the $(\frac{dy}{dx})$ curve at various values of (x) and using the relationship (7):

$$\left(\frac{d^2y}{dx^2}\right) = \frac{M}{EI}. \qquad (3.29)$$

Similarly, the shear values are found by plotting the moment function and measuring its slope and using the relationship (7):

$$V = \frac{dM}{dx}. \qquad (3.30)$$

These values for various values of (x) are shown in Fig. 9 and the physical dimensions of the work roll are shown in Fig. 10.

ORNL DWG. 69-2317

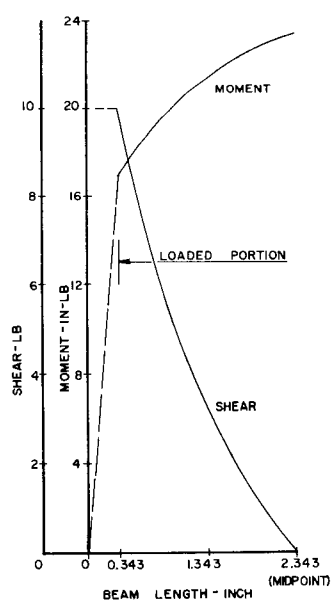

Fig. 9. Characteristics of the Work Roll

ORNL DWG. 68-7853

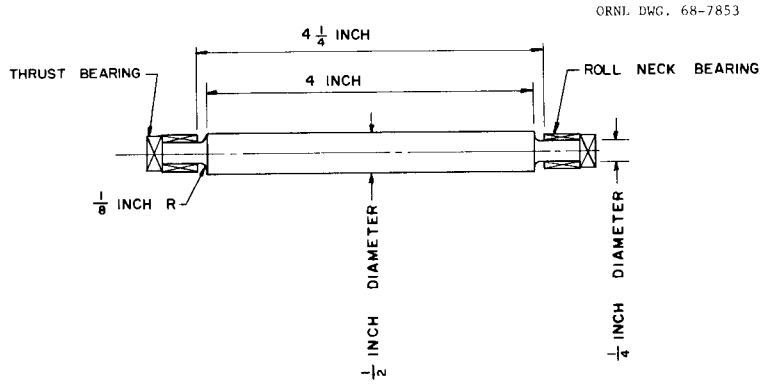

Fig. 10. Physical Dimensions of the Work Roll

The work roll, whose purpose it is to minimize the vertical separating force, does not behave as an independent beam but is forced by the distributed load to conform to the deflection curve of the backup roll. Application of the shear and moment values found above will allow determination of the end reactions and stress distribution within the roll body which is done in the following section.

4. STRESS ANALYSIS OF THE ROLLS

EXTERNAL FORCES

The stress analysis of the mill rolls is performed in several steps. The first of these steps is the calculation of the external forces acting on each of the rolls. This is followed by calculation of stress concentrations at the roll necks and contact stresses between the rolls. The third and final step is the calculation of the general stress distribution within the bodies of the rolls.

All of the external forces acting on the rolls as well as the associated mill stand components can be calculated knowing the separating force, torque and roll sizes. These forces and the roll speeds are listed and calculated below:

Separating force, $P = 20,320$ lb.

Torque per work roll, $T_W = 170$ in./lb.

Speed of workpiece = 0 to 10 in./minute

$$\text{Work roll speed} = \frac{10}{\text{W.R. Circ.}} = \frac{2 \times 10}{\pi} = 6.37 \text{ rpm max}$$

$$\text{Backup roll speed} = 6.37 \left(\frac{\text{W.R. dia}}{\text{B.R. dia}}\right) = 6.37 \left(\frac{1/2}{4\ 1/4}\right)$$

$$= 0.75 \text{ rpm max}$$

$$\text{Force transmitted between rolls} = \frac{T_W}{\text{W.R. radius}} = \frac{170}{1/4} = 680 \text{ lb.}$$

Backup roll torque, $T_B = 680 \times \text{B.R. radius} = 680 \times 2\ 1/8 =$ 1445 in./lb.

Maximum transmitted frictional force $= P\mu = 20,320 \times 0.07 =$ 1422 lb.

$$\text{Horsepower per roll} = \frac{Tn}{63,000} = \frac{1445 \times 0.75}{63,000} = 0.0172 \text{ hp per roll.}$$

Figure 11 shows how all of the above quantities act on the rolls.

ORNL DWG. 68-7854

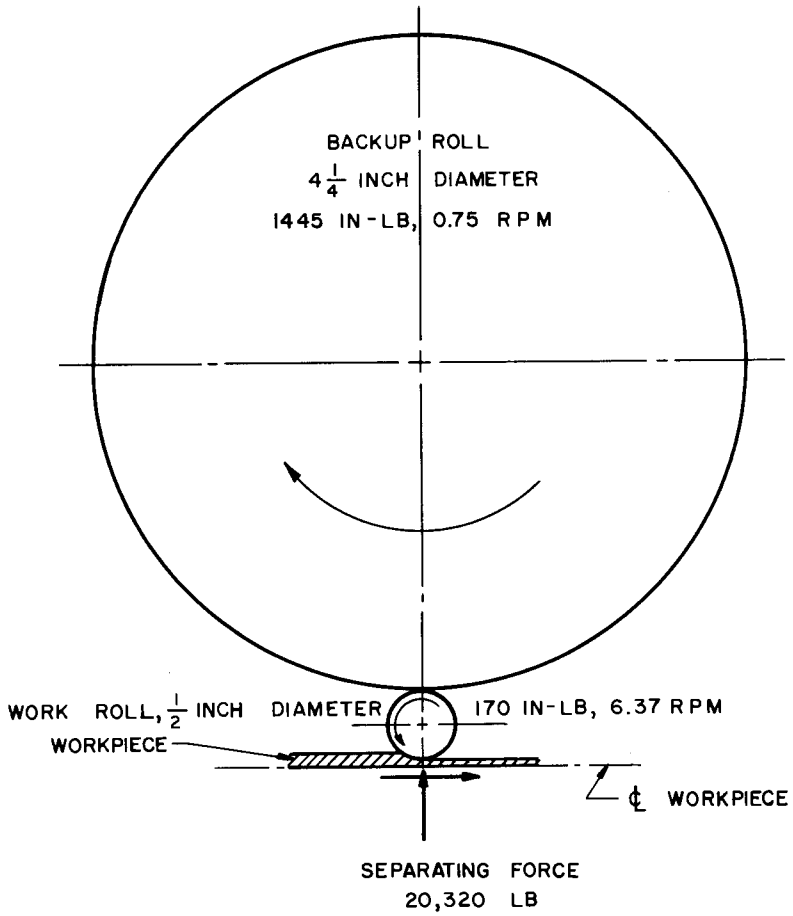

Fig. 11. External Roll Forces

STRESS CONCENTRATIONS

Fillets

Stress concentrations occur at the work roll and backup roll fillets where the diameter changes from the load face diameter to the roll neck diameter. The work roll fillet is affected by bending only since the neck transmits no torque other than bearing friction which will be neglected. The backup roll fillet is affected by both bending and torsion since the driving torque for the mill is transmitted through the backup roll necks.

The stress concentration factors (SCF) are taken from published curves and are based on the parameters shown in Fig. 12 (8,9).

ORNL DWG. 68-7855

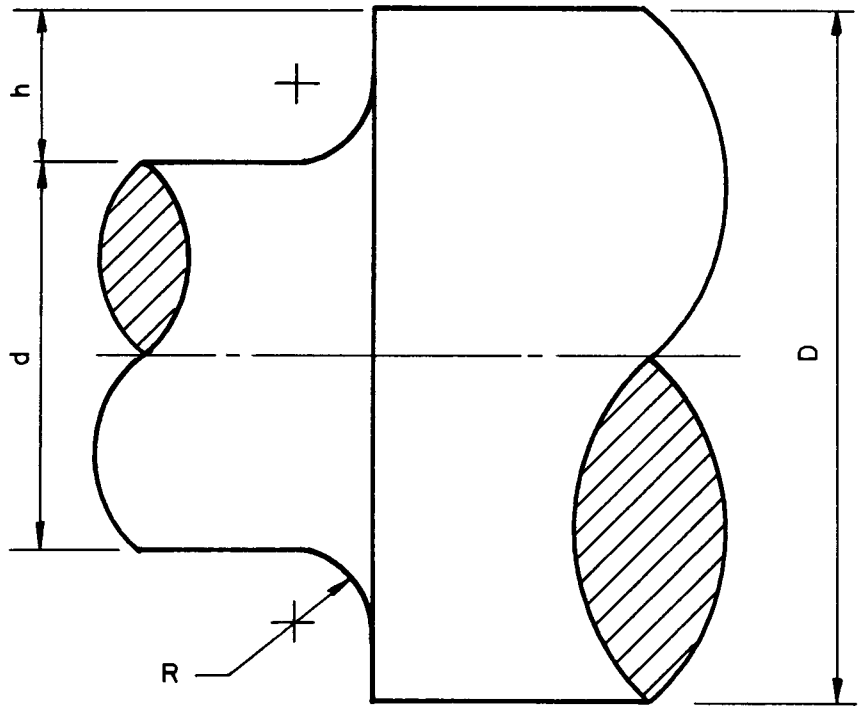

Fig. 12. Stress Concentration Factor Reference Diagram

Calculating the SCF for the work roll

$$\frac{h}{R} = \frac{1/8}{1/8} = 1$$

$$\frac{R}{d} = \frac{1/8}{1/4} = \frac{1}{2}$$

$$\frac{D}{d} = \frac{1/2}{1/4} = 2$$

from the published curves, SCF (bending) = 1.22.

Calculating the SCFs for the backup roll

$$\frac{h}{R} = \frac{3/8}{1/8} = 3$$

$$\frac{R}{d} = \frac{1/8}{3\ 1/2} = 0.0357$$

$$\frac{D}{d} = \frac{4\ 1/4}{3\ 1/2} = 1.214$$

from the published curves, SCF (bending) = 2.12
SCF (torsion) = 1.73.

Contact Stresses

A second area of concentrated stress is the area of contact between the work roll and the backup roll where the separating force is transmitted from one roll to the other. Similar stresses occur in the area of contact between the work roll and the workpiece, but these values have been previously calculated and are shown on Fig. 3.

The maximum stresses due to contact occur at the surface in the center of the area of contact and are compressive. This maximum compressive stress is given by the equation (8):

$$P_{max} = 0.798 \sqrt{\frac{P\left(\frac{d_1 + d_2}{d_1 \cdot d_2}\right)}{\left(\frac{1 - \nu_1^2}{E_1} + \frac{1 - \nu_2^2}{E_2}\right)}} \qquad (4.1)$$

and

$$b = 1.6 \sqrt{P\left(\frac{d_1 d_2}{d_1 + d_2}\right)\left(\frac{1 - \nu_1^2}{E_1} + \frac{1 - \nu_2^2}{E_2}\right)} \qquad (4.2)$$

where

P_{max} = maximum compressive stress, psi

P = unit separating force, lb. per in.

d = diameter, in.

ν = Poisson's ratio

E = modulus of elasticity, psi

b = width of contact area, in.

Subscripts (1) and (2) refer to the two rolls.

$$P_{max} = 0.798 \sqrt{\frac{5080 \left(\frac{4\ 1/4 + 1/2}{4\ 1/4 \times 1/2}\right)}{\left(\frac{1 - 0.3^2}{30 \times 10^6} + \frac{1 - 0.211^2}{91.6 \times 10^6}\right)}} = 421,500 \text{ psi}$$

$$b = 1.6 \sqrt{5080 \left(\frac{4\ 1/4 \times 1/2}{4\ 1/4 + 1/2}\right) \left(\frac{1 - 0.3^2}{30 \times 10^6} + \frac{1 - 0.211^2}{91.6 \times 10^6}\right)} = 0.0154 \text{ in.}$$

The maximum shear stress due to contact stress is given by the expression (6)

$$s_{yz} = (0.3003)\ P_{max}$$

$$s_{yz} = (0.3003)(421,500) \qquad (4.3)$$

$$s_{yz} = 126,600 \text{ psi.}$$

This maximum shear stress is located at a depth (Z) below the contact surface and is known to contribute to surface spalling.

$$Z = (0.393)b$$

$$Z = (0.393)(0.0154) \qquad (4.4)$$

$$Z = 0.00605 \text{ in.}$$

The contact stress between work roll and workpiece in the contact zone is assumed to occur similarly and is taken as being equal to the maximum roll pressure as shown on Fig. 3.

Therefore,

$$s_{yz} = (0.3003)(550,000)$$

$$s_{yz} = 165,000 \text{ psi}$$

and,

$$Z = (0.393)\ b'$$

where

$$b' = \text{width of contact zone} = R'\alpha \ (5)$$

$$b' = (0.307)(0.0626)$$

$$b' = 0.0192 \text{ in.}$$

and

$$Z = (0.393)(0.0192)$$

$$Z = 0.00754 \text{ in.}$$

Figure 13 shows a plot of the various subsurface elastic stresses and their orientation for contact between two parallel cylinders. From this figure it is seen that the following relationships hold at the surface (6):

$$s_z = -P_{max} \tag{4.5}$$

$$s_y = s_z \tag{4.6}$$

and

$$s_x = (0.6)s_z. \tag{4.7}$$

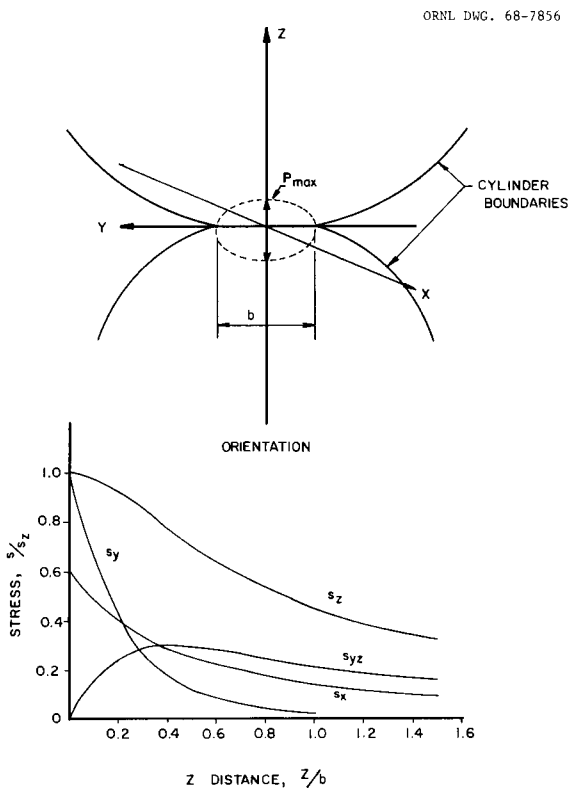

Fig. 13. Parallel Cylinder Contact Stresses

For the contact zone between the two rolls

$$s_z = -421,500 \text{ psi}$$

$$s_y = -421,500 \text{ psi}$$

$$s_x = (0.06)(-421,500)$$

$$s_x = -252,900 \text{ psi}$$

and for the work zone

$$s_z = -550,000 \text{ psi}$$

$$s_y = -550,000 \text{ psi}$$

$$s_x = (0.06)(-421,500)$$

$$s_x = -330,000 \text{ psi.}$$

The stresses calculated above are due entirely to the forced contact between two parallel cylinders which in this case are the work and backup rolls.

INTERNAL STRESS DISTRIBUTION

The types of stresses which occur in the rolls due to the separating force and torque applied are tensile, compressive, and shear stresses due to bending of the rolls and torsional shear stresses. These individual stress components are combined to determine the principal stresses. These stresses are determined under the conditions of maximum loading discussed in Section 3.

The forces and various resulting characteristics found in Section 3 are due to vertical considerations only as this is what determines the dimensions of the finished product. There are, however, horizontal forces due to the applied torque which should be considered in finding the roll stresses. The moment and shear values are modified to take these forces into consideration in the case of each roll.

The sign convention used in all stress calculations is to consider tension as positive, compression as negative and shear as positive when the shear diagonal is in the second quadrant.

Stress Equations

Tensile and compressive stresses due to bending, whose distributions are shown in Fig. 14, are given by the equation (7)

$$s_x = \frac{My}{I_z} \tag{4.8}$$

where,

s_x = tensile or compressive stress, psi

M = moment, in.-lb.

y = distance from neutral axis

I_z = moment of inertia about the Z-axis, in.^{4}.

The shearing stress at any point in a circular cross section is given by the expression (7)

$$s_s = \frac{s_{xy}}{\cos\theta'} \tag{4.9}$$

and

$$(s_s)_{max} = \frac{s_{xy}}{\cos\theta} \tag{4.10}$$

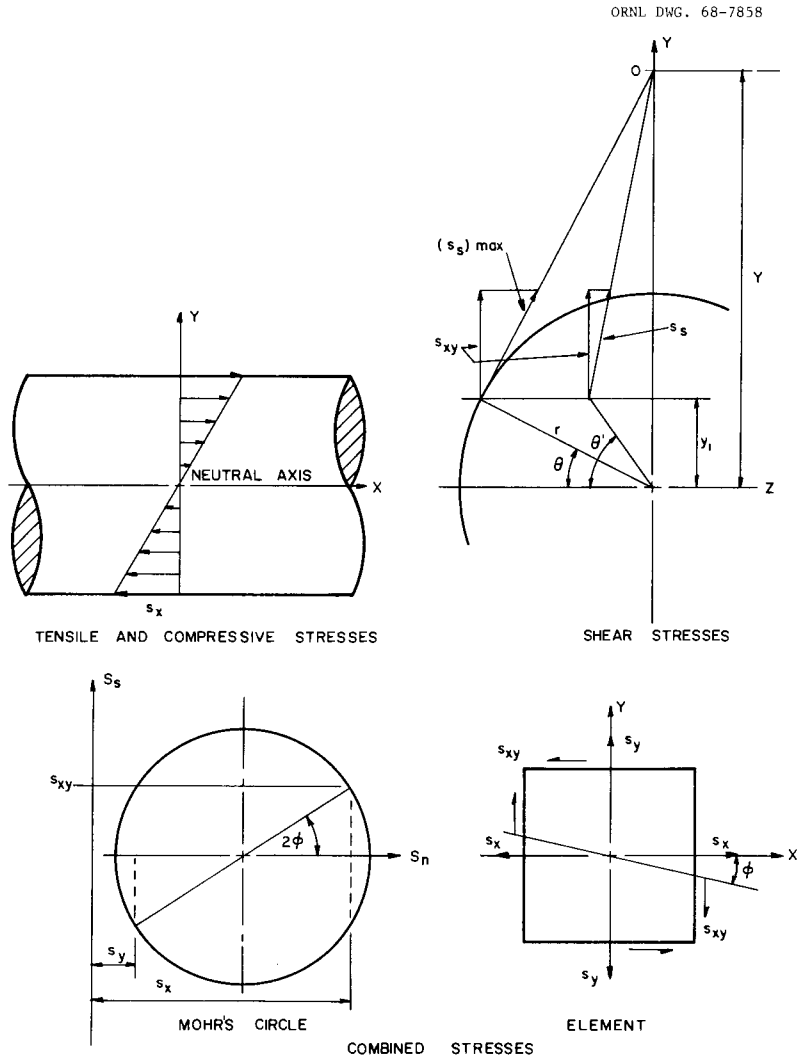

Fig. 14. Stress Diagrams

and by the sketch in Fig. 14 where

s_s = shear stress at any point, psi

s_{xy} = vertical component of shear stress, psi

$$s_{xy} = \frac{V(R^2 - y_1^2)}{3I_z}$$

V = shear force, lb.

R = radius, in.

y_1 = distance from neutral axis

$\theta \quad = \sin^{-1}(\frac{y_1}{R})$

$\theta' \quad = \tan^{-1}(\frac{z}{Y - y_1})$

$z \quad$ = distance from the vertical center line, in.

$Y \quad = R/\sin\theta$, in.

The torsional shearing stress at any point in a solid circular shaft is given by the expression (7)

$$s_s = \frac{M_t r}{I_p} \tag{4.11}$$

where

M_t = applied torque, in./lb.

r = radial distance, in.

I_p = polar moment of inertia = $\frac{\pi}{32D^4}$, in.^{4}

and

$$(s_s)_{max} = \frac{16\ M_t}{\pi\ D^3}\ . \tag{4.12}$$

The combined plane stresses at any point are shown on Fig. 14 and given by the expressions (7)

$$(S_n)_{\substack{max \\ min}} = (\frac{S_x + S_y}{2}) \pm \sqrt{(\frac{S_x - S_y}{2})^2 + (S_{xy})^2} \tag{4.13}$$

and

$$(S_s)_{max} = \sqrt{(\frac{S_x - S_y}{2})^2 + (S_{xy})^2} \tag{4.14}$$

and

$$\text{Tan } 2\phi = \frac{2\ S_{xy}}{(S_x - S_y)} \tag{4.15}$$

where

S_n = normal stress, psi

S_s = shear stress, psi

ϕ = CW angle of $(S_n)_{max}$ from the x-axis.

The maximum and minimum normal stresses occur on those planes where the shearing stress is zero.

The directions of the various stresses at a particular point and the location of the maximum stress values can be determined by inspection of the roll under load with the shear and moment diagrams.

The rolls all behave in a similar manner so a look at any one roll will serve to explain the behavior of all rolls. As an example, consider a vertical plane through the center of the lower backup roll. Figure 15 shows the behavior of various areas of the backup roll as related to the shear and moment diagrams.

ORNL DWG. 69-2318

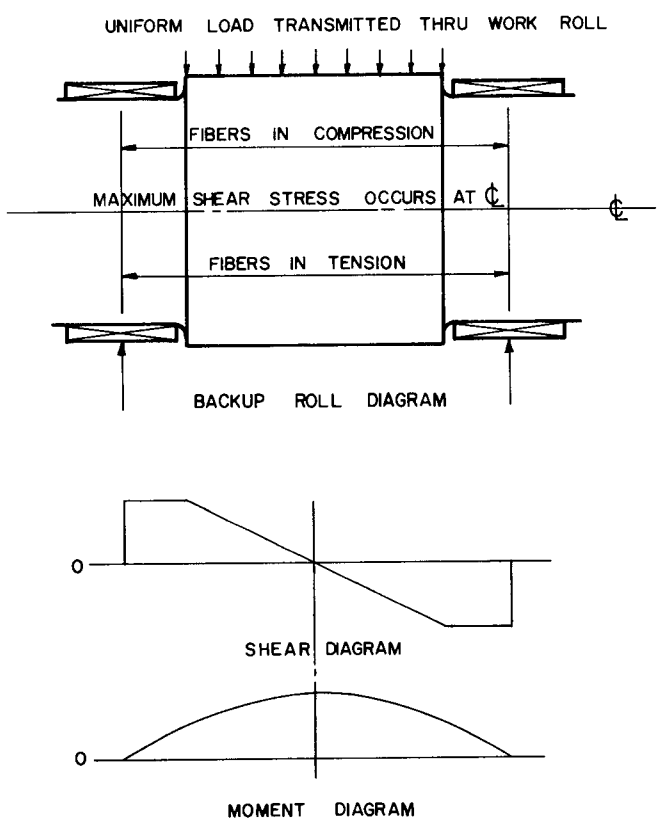

Fig. 15. Backup Roll Load Diagrams

Backup Roll Calculations

Stress calculations are first made for the backup roll and then for the work roll. The vector sum of both vertical separating force and horizontal roll turning force must be found first and is done on a unit basis as follows:

$$w' = \sqrt{\left(\frac{20,320}{4}\right)^2 + \left(\frac{680}{4}\right)^2}$$

where

w' = unit resultant force on roll, lb./in.

$w' = 5083$ lb./in.

This unit force acts at an angle (β) from the vertical of

$$\beta = \tan^{-1} \frac{5080}{170} = \tan^{-1} 29.88$$

$$\beta = 88.08^\circ.$$

It is seen that the horizontal force is of very little significance in determining the characteristics of the backup roll as found in Section 3, and these need be modified only slightly to find the total stresses.

The y-axis is rotated slightly to coincide with the direction of the calculated resultant unit force (w') and the bending and shear stress calculations are made on the basis of this rotated coordinate system. Due to the symmetrical geometry of the backup roll and the balanced maximum distributed load under which the rolls are being investigated, it can be seen that analysis of a portion of the backup roll will represent the stress distribution throughout the entire roll.

The roll stresses are symmetrical about the midpoint of the roll load face and are also symmetrical about the neutral axis, although they are tensile on one side and compressive on the other side. Therefore, by considering a vertical plane through the roll midpoint and perpendicular to the neutral axis and another plane through the neutral axis and perpendicular to the rotated y-axis, a one quarter portion of the roll may be isolated which is representative of the entire roll. This quarter section of the roll may further be reduced by passing a plane through the neutral axis and the y-axis and analyzing the resulting one-eighth section.

The values of bending stresses which exist in the central plane, the plane through the y-axis and neutral axis, of the backup roll are calculated using Equations (4.8) and (4.9) and are shown in Tables 3 and 4.

Table 3. Backup Roll Bending Stresses (s_x)

X, in.	0	1/4	1/2	3/4	1(R_o)	1(R_1)	1 1/4	1 1/2	1 3/4	2	2 1/4	2 1/2	2 3/4	3
M, in. lb.	0	2541	5083	7624	10,166	10,166	12,548	14,614	16,362	17,781	18,902	19,697	20,173	20,332
y, in.														
0	0	0	0	0	0	0	0	0	0	0	0	0	0	0
1/4	0	86	172	258	344	159	196	228	255	278	295	308	315	317
1/2	0	172	344	516	688	317	392	456	511	555	590	615	630	634
3/4	0	259	518	777	1036	476	587	684	766	833	865	923	945	953
1	0	345	690	1036	1381	634	783	913	1021	1110	1180	1230	1260	1270
1 1/4	0	431	862	1294	1725	793	980	1141	1276	1388	1476	1538	1575	1587
1 1/2	0	517	1035	1552	2069	953	1176	1369	1531	1665	1770	1845	1890	1904
1 3/4	0	603	1207	1810	2413	1111	1371	1597	1788	1943	2065	2153	2204	2221
2	0	-	-	-	-	1270	1567	1825	2043	2220	2361	2460	2519	2540
2 1/8	0	-	-	-	-	1349	1665	1939	2170	2359	2508	2614	2677	2698

Table 4. Backup Roll Shear Stresses (s_{xy})

X, in.	0	1/4	1/2	3/4	1(R_o)	1(R_1)	1 1/4	1 1/2	1 3/4	2	2 1/4	2 1/2	2 3/4	3
V, lb.	10,166	10,166	10,166	10,166	10,166	10,166	8895	7674	6350	5086	3812	2541	1271	0
y, in.														
0	1410	1410	1410	1410	1410	952	832	713	594	476	357	238	119	0
1/4	1380	1380	1380	1380	1380	940	833	705	587	470	352	235	117	0
1/2	1293	1293	1293	1293	1293	881	770	660	550	440	330	220	110	0
3/4	1097	1097	1097	1097	1097	836	731	627	522	418	313	209	104	0
1	948	948	948	948	948	740	648	555	463	370	278	185	93	0
1 1/4	689	689	689	689	689	622	544	467	389	311	233	156	78	0
1 1/2	372	372	372	372	372	477	417	358	298	238	179	119	60	0
1 3/4	0	0	0	0	0	306	268	230	191	153	115	77	38	0
2	-	-	-	-	-	108	94	81	67	54	40	27	13	0
2 1/8						0	0	0	0	0	0	0	0	0

It is obvious from observation of Tables 3 and 4 that the maximum bending and shear stresses occur in the vicinity of the roll neck of the backup roll, especially when the stress concentration factors are considered.

The torsional stress due to the driving torque is calculated from Equation (4.11) and is shown below. The torsional stresses are constant in each of the two diameter sections and are calculated for each of these.

For $D_0 = 3\ 1/2$ in. and $0 \leq x \leq 1$ in.

$$I_P = \frac{\pi}{32} D^4 = \frac{\pi}{32} (3\ 1/2)^4 = 14.72 \text{ in.}^4$$

$$s_s = \frac{M_t R_o}{I_P} = \frac{1445 R_0}{14.72} = (98.2) R_0 \text{ psi}$$

$$(s_s)_{max} = (98.2)(1\ 3/4) = 171.8 \text{ psi.}$$

For $D_1 = 4\ 1/4$ in. and $x \geq 1$ in.

$$I_P = \frac{\pi}{32} D^4 = \frac{\pi}{32} (4\ 1/4)^4 = 32.0 \text{ in.}^4$$

$$(s_s)_{max} = (45.2)(2\ 1/8) = 96.0 \text{ psi}$$

$$s_s = \frac{M_t R_1}{I_P} = \frac{1445 R_1}{32.0} = (45.2) R_1 \text{ psi}$$

$$s_s = (45.2)(2\ 1/8) = 96.0 \text{ psi.}$$

The torsional stress in the roll neck exists only in the end through which the mill driving torque is supplied. Tables 3 and 4 indicate that both bending and torsional stresses are highest in the roll neck fillet or point of stress concentration.

Beyond this fillet region of the backup roll, the stresses taper off to lesser values as indicated in the above-mentioned tables. Table 5 shows the combined stresses present in the backup roll neck fillet which have been calculated through the use of equations (4.13), (4.14), and (4.15). Figure 16 represents a typical stressed element in the backup roll surface which is subject to the stresses discussed in the preceding section.

Table 5. Backup Roll Maximum Combined Stresses

(x = 1 in., R_0 = 1 3/4 in., SCF in bending = 2.12, SCF in torsion = 1.73)

θ	0°	10°	20°	30°	40°	50°	60°	70°	80°	90°
S_x(SCF)	0	889	1750	2559	3289	3919	4430	4607	5038	5115
$(S_s)_{bending}$	1410	1390	1324	1220	1078	915	705	460	238	0
$(S_s)_{torsion}$(SCF)	297	297	297	297	297	297	297	297	297	297
$S_{xy} = (S_s)_{total}$	1706	1686	1620	1516	1374	1211	1003	777	535	297
S_n	0 ±1706	444 ±1741	875 ±1840	1279 ±1983	1644 ±2143	1959 ±2302	2215 ±2432	2403 ±2523	2519 ±2574	2557 ±2572
S_s	1706	1741	1840	1983	2143	2302	2432	2523	2574	2572
Tan 2 ϕ	∞	3.797	1.854	1.186	0.836	0.618	0.453	0.323	0.212	0.116
ϕ	45°	37.62°	30.84°	24.93°	19.95°	15.86°	12.20°	8.96°	5.99°	3.31°

ORNL DWG. 68-7859

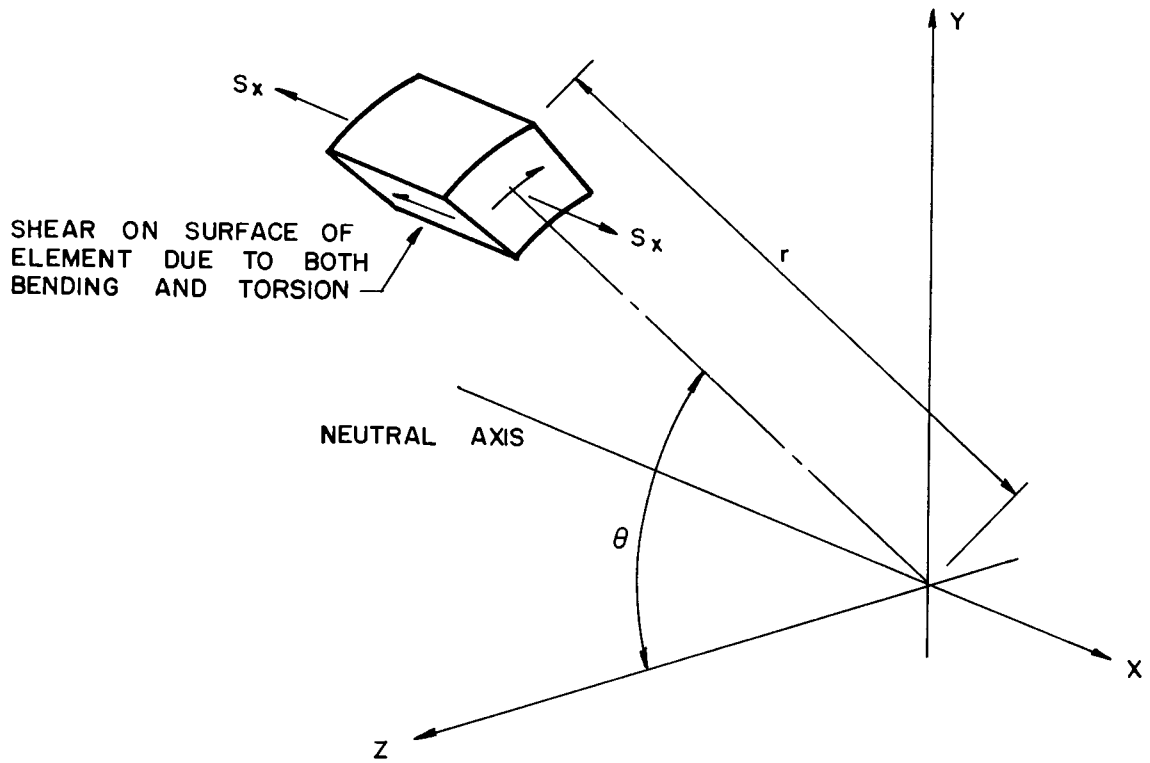

Fig. 16. Backup Roll Stressed Element

Work Roll Calculations

The stresses in the work roll are calculated as they were for the backup roll. The same conditions of symmetry hold for the work roll as did for the backup roll.

The moment and shear values of Fig. 9 can be related to some vertical force which would cause those values shown. As indicated by the shear along the unloaded portion which is equivalent to the end reaction, the vertical forces are small. Use of this value to produce at least the deflection of the backup roll is verified through the use of Equation (3.28). The work roll is subjected to the horizontal force transmitted from the backup roll and an equivalent force exerted by the workpiece during the process of rolling. The forces are of the same value as that acting on the backup roll which is 170 lb. per in. or 680 lb. total each. The sum of these two forces causes an end reaction of 680 lb. per roll neck bearing which is greatly in excess of the vertical reaction of 20 lb.

The resultant unit force (w') is found to be

$$w' = \sqrt{340^2 + (\frac{20}{2})^2} = 340.1 \frac{\text{lb.}}{\text{in.}} .$$

This force acts at an angle (β) from the horizontal of

$$\beta = \tan^{-1} (\frac{10}{340}) = 1.68^\circ .$$

The work roll stresses will be found in terms of the resultant load and the axes will be rotated such that the y-axis coincides with the direction of the resultant load.

The bending and shear stresses in the x-y plane of the work roll are shown in Tables 6 and 7.

The torsional stress is calculated as below from Equation (4.11). Since no torque is transmitted by the work roll neck, the torsional stresses occur only in the load face section, neglecting any roll neck bearing friction.

$$I_P = \frac{\pi}{32} D_1^4 = \frac{\pi}{32} (\frac{1}{2})^4 = 0.00614 \text{ in.}^4$$

$$(s_s) = \frac{M_t R_1}{I_P} = \frac{170R_1}{0.00614} = 27,667R_1$$

$$(s_s)_{max} = 27,687 \ (1/4) = 6,922 \text{ psi.}$$

Observation of Tables 6 and 7 indicate that the most highly stressed part of the work roll is located in the roll neck fillet. Equations (4.13), (4.14), and (4.15) are used to calculate the principal stresses at this point which are shown in Table 8.

Backup Roll Analysis

The calculated stresses are now examined to determine where the actual point of maximum stress occurs and what its value is. The maximum stress will occur as a result of either bending and torsional stress of contact stress.

It can be seen that the stresses due to bending and torsion are maximum in the quadrants where the torsional stress adds to the bending shear stress. In the remaining quadrants these two values are subtracted. This

Table 6. Work Roll Bending Stresses (s_x)

x, in.	0	1/8	7/3	$\frac{11}{32}(R_0)$	$\frac{11}{32}(R_1)$	$\frac{19}{32}$	$\frac{27}{32}$	$1\frac{3}{32}$	$1\frac{11}{32}$	$1\frac{19}{32}$	$1\frac{27}{32}$	$2\frac{3}{32}$	$2\frac{11}{32}$
M, in.-lb.	0	84	147	234	234	393	531	647	743	817	871	903	913
y, in.													
0	0	0	0	0	0	0	0	0	0	0	0	0	0
1/32	0	13,592	23,947	37,861	-	-	-	-	-	-	-	-	-
1/16	0	27,227	47,972	75,846	4,748	7,942	10,792	13,145	15,091	16,591	35,322	18,337	18,540
3/32	0	40,819	71,919	113,707	-	-	-	-	-	-	-	-	-
1/8	0	54,455	95,942	151,692	9,493	15,983	21,583	26,289	30,182	33,185	35,376	36,674	37,081
3/16	-	-	-	-	14,241	23,977	32,373	39,434	45,273	49,778	53,064	55,012	55,621
1/4	-	-	-	-	18,986	31,969	43,164	52,580	60,367	66,371	70,752	14,410	74,161

Table 7. Work Roll Shear Stresses (s_{xy})

X, in.	0	1/8	7/32	$\frac{11}{32}(R_0)$	$\frac{11}{32}(R_1)$	$\frac{19}{32}$	$\frac{27}{32}$	$1\frac{3}{32}$	$1\frac{11}{32}$	$1\frac{19}{32}$	$1\frac{27}{32}$	$2\frac{3}{32}$	$2\frac{11}{32}$
V, lb.	680	680	680	680	680	595	510	425	340	255	170	85	0
y, in.													
0	18,452	18,452	18,452	18,452	4,619	4,030	3,459	2,876	2,307	1,723	1,152	569	0
1/32	17,300	17,300	17,300	17,300	-	-	-	-	-	-	-	-	-
1/16	13,827	13,827	13,827	13,827	4,327	3,772	3,239	2,694	2,159	1,614	1,080	533	0
3/32	8,063	8,063	8,063	8,063	-	-	-	-	-	-	-	-	-
1/8	0	0	0	0	3,403	3,019	2,594	2,157	1,729	1,292	865	427	0
3/16	-	-	-	-	2,023	1,763	1,514	1,258	1,010	755	505	250	0
1/4	-	-	-	-	0	0	0	0	0	0	0	0	0

Table 8. Work Roll Maximum Combined Stresses

($x = 11/32$ in., $R_0 = 1/8$ in., SCF in bending = 1.22)

θ	0°	10°	20°	30°	40°	50°	60°	70°	80°	90°
S_x(SCF)	0	32,136	63,296	92,532	118,957	141,766	160,271	173,902	182,253	185,064
$(S_s)_{bending}$	18,452	17,889	16,288	13,827	10,842	7,641	4,605	2,125	591	0
$(S_s)_{torsion}$	0	0	0	0	0	0	0	0	0	0
$S_{xy} = (S_s)_{total}$	18,452	17,889	16,288	13,827	10,842	7,641	4,605	2,125	591	0
S_n	0 ±18,452	16,068 ±24,046	31,648 ±35,594	46,266 ±48,288	59,478 ±60,458	70,883 ±71,294	80,135 ±80,267	86,951 ±86,977	91,126 ±91,128	92,532 ±92,532
S_s	18,452	24,046	35,594	48,288	60,458	71,294	80,267	86,977	91,128	92,532
Tan 2 ϕ	∞	1.113	0.515	0.299	0.182	0.108	0.0575	0.0244	0.0065	0
ϕ	45°	24,03°	13.61°	8.31°	5.11°	3.07°	1.64°	0.70°	0.18°	0

is a function of how the torque and separating force are applied and such a condition of loading is depicted in Fig. 17. The shear components will add in quadrants (1) and (4). Therefore, the stress will reach a maximum value on these quadrants; and these will be considered in the following analysis.

ORNL DWG. 68-7860

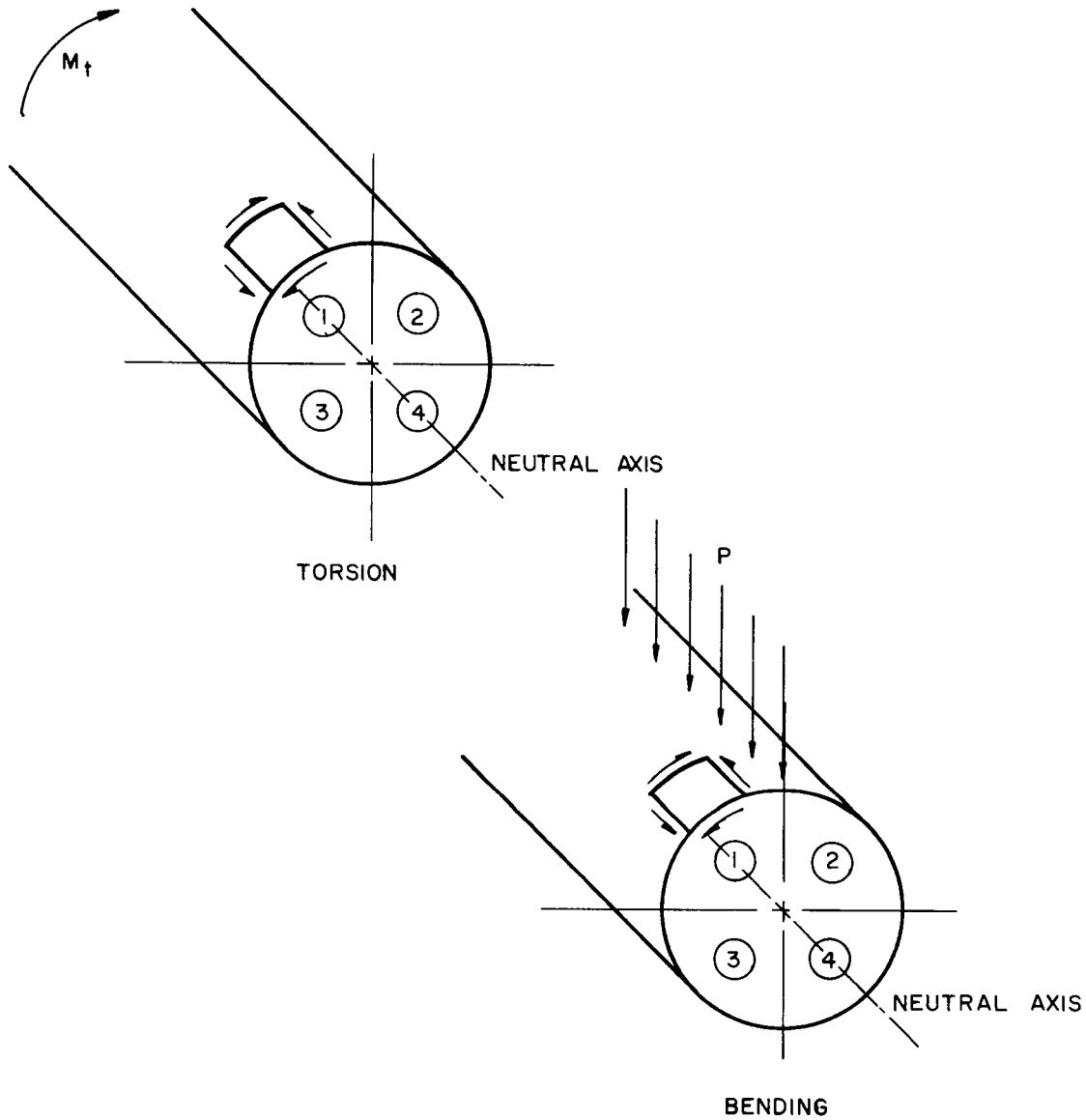

Fig. 17. Torsion and Bending Shear Stress

The maximum principal stresses in the backup roll occur at the change in section in the smaller diameter where the stress concentrations occur. Figure 18 shows the location of the maximum principal stress; and referring to Fig. 15 and Fig. 17 this would have a maximum tensile value while in the opposite quadrant the stress is compressive. The stress values

ORNL DWG. 69-2319

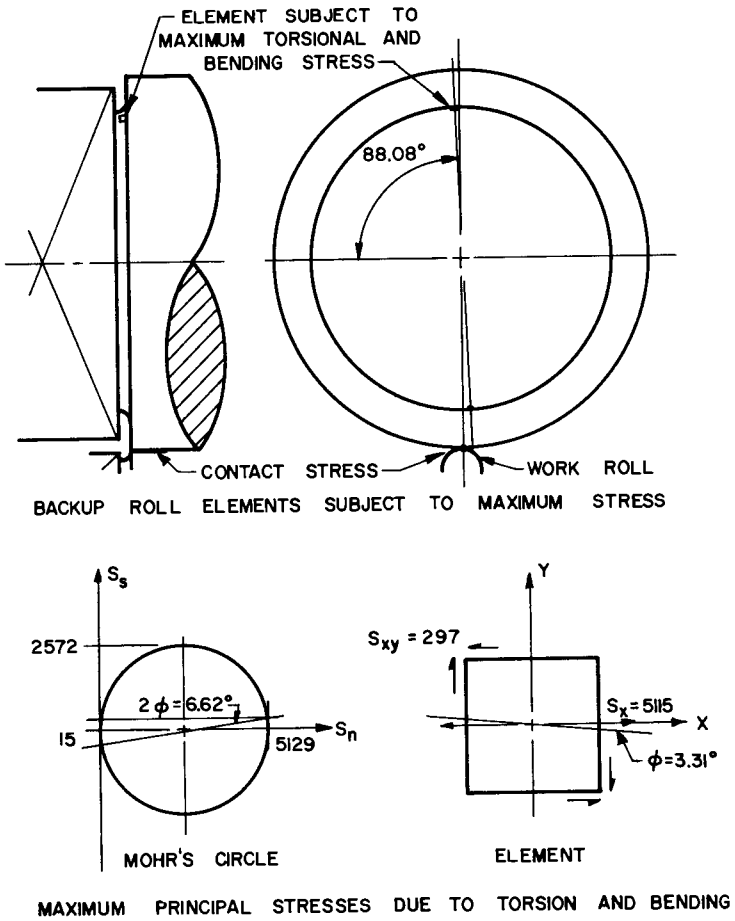

Fig. 18. Maximum Stressed Element in Backup Roll

for the point indicated on Fig. 18 are as follows:

s_x = 5115 psi

$(s_s)_{bending}$ = 0

$(s_s)_{torsion}$ = 297 psi

s_{xy} = 297 psi

$(S_n)_{max}$ = 5129 psi

$(S_n)_{min}$ = -15 psi

(S_s) = 2572 psi

ϕ = 3.31°

θ = 90°

This value of θ may be referred to the horizontal z-axis by taking into account the direction of the resultant load found earlier. The angle then becomes

$$\theta = 88.08^\circ .$$

The contact stresses are constant along the line of contact between the two rolls, and reach a maximum compressive value of 421,500 psi and a maximum shear value of 126,600 psi at 0.00605 in. below the contact surface. The chief effects of the contact stresses are on the life of the rolling element. It is known (6,8) that testing and experience are the most reliable methods for determining element life.

Work Roll Analysis

The work roll is examined as was the backup roll with respect to combined bending and torsional stresses, as well as the contact stresses. The maximum principal stresses occur at the change in section in the smaller diameter. The maximum stresses are restated here from Table 8 and shown in Fig. 19.

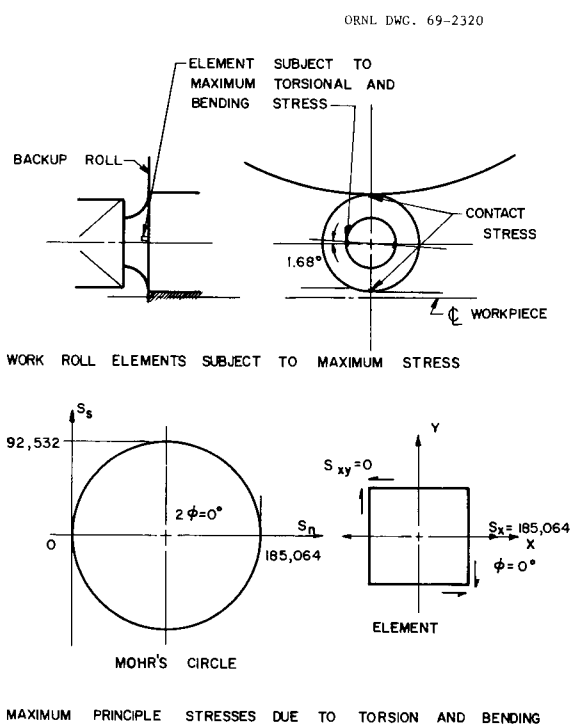

Fig. 19. Maximum Stressed Element in Work Roll

s_x	= 185,064 psi
$(S_s)_{bending}$	= 0
$(S_s)_{torsion}$	= 0
S_{xy}	= 0
$(S_n)_{max}$	= 185,064 psi
$(S_n)_{min}$	= 0 psi
S_s	= 92,532 psi
ϕ	= 0°
θ	= 90°

This value may again be referred to the horizontal axis where it becomes

$$\theta = 1.68^\circ .$$

Contact stresses occur in the work roll at both the line of contact with the backup roll, where the stresses are identical with those in the backup roll, and with the workpiece. These particular stresses which are the greater of the two reach a maximum compressive value of 550,000 psi and a shear of 165,000 psi at 0.00754 in. below the surface of contact. Once

again the principal effects of these stresses are upon the life of the element.

5. DESIGN OF THE MILL STAND

GENERAL DISCUSSION

Section 5 deals with the general overall design of the mill stand and drive system required to handle the separating force and torque developed by the rolls in reducing a typical workpiece. These factors will be based on conditions of maximum loading as was done in the preceding section on the roll stress analysis. Figure 20 shows the mill stand assembly which is to be located within the enclosure.

ORNL DWG. 68-7865

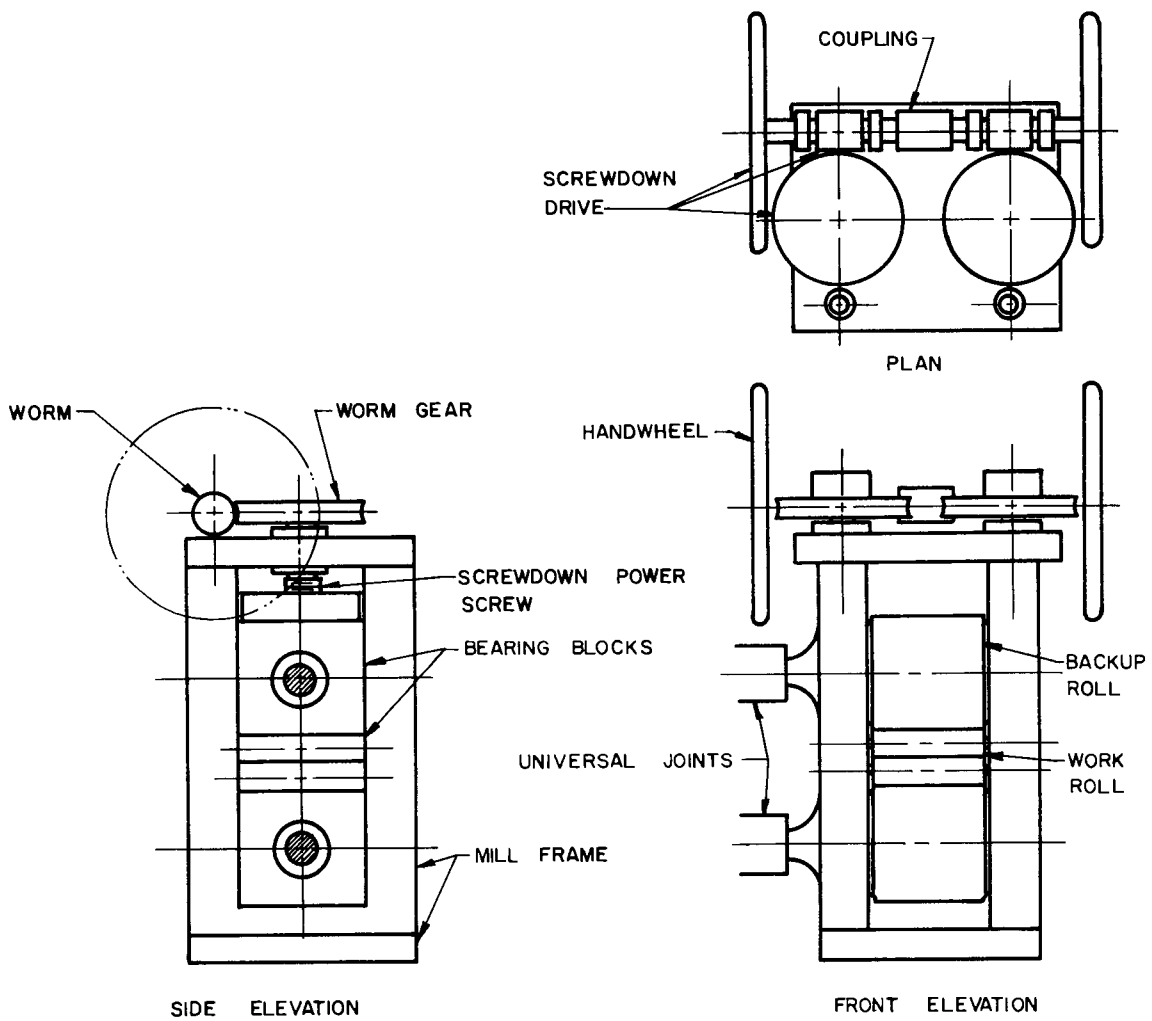

Fig. 20. Mill Stand Assembly

The basic subassemblies used in the mill and discussed in this section are as follows:

1. Backup rolls and bearing block assemblies,
2. Work rolls and bearing block assemblies,
3. Screwdown mechanism assembly,
4. Mill frame,
5. Mill drive.

These subassemblies are discussed in terms of the reactions imposed upon them by the rolls and the materials used in their construction.

The materials used in the mill stand itself should be considered from the point of view of cleanliness and corrosion resistance wherever practical. Some of the machine elements are not readily available in such materials as stainless steel or corrosion resistant alloys but wherever practical this point is considered.

The service the mill is expected to be subjected to is a steady, slow speed, non-shock motion. Under these conditions a material working stress of 20,000 psi is considered to be satisfactory for most components using stainless steel wherever possible. Exceptions to this are noted in the following sections.

The majority of the component design is based on the expression

$$S_i = \frac{F_i}{A_i} \tag{5.1}$$

where

S = stress, psi
F = force, lb.
A = area, sq. in.
i = appropriate subscript
  b = bearing
  c = compression
  s = shear
  t = tension.

SUBASSEMBLY DESIGN

Backup Roll and Bearing Block Subassembly

This subassembly, which is shown in Fig. 21, consists of the backup roll itself, roll neck and thrust bearings, bearing blocks and universal joints through which is supplied the driving torque. The roll itself has been thoroughly analyzed in the preceding section with respect to the loaded zone and will be briefly discussed at the end of this section.

ORNL DWG. 69-2321

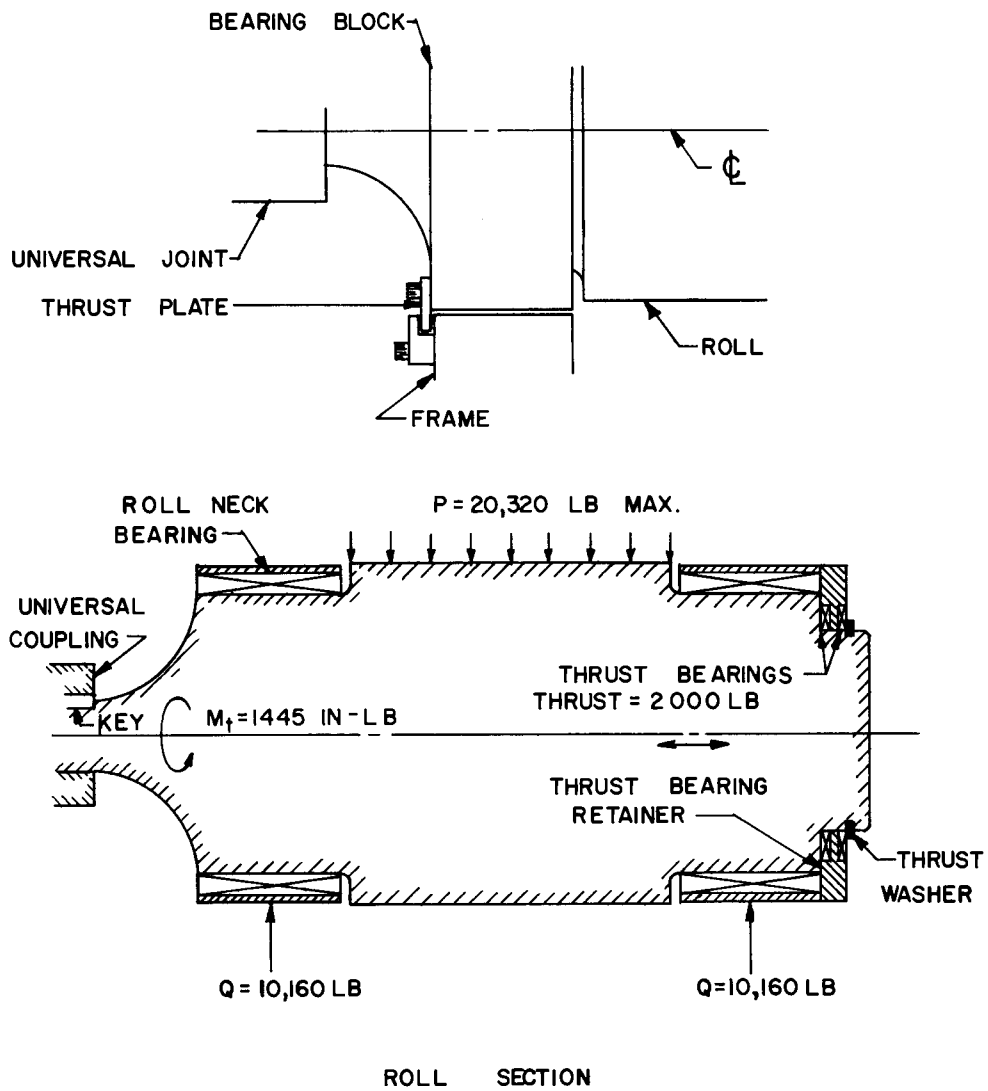

Fig. 21. Backup Roll Subassembly

The roll neck bearings are subject to the end reaction of 10,166 lb. at a maximum rotational speed of 0.75 rpm. The previously selected bearings are quite satisfactory for this purpose and are restated below (12):

> "Torrington Model GB-5628 needle roller bearing
> 3 1/2 in. i.d., 4 in. o.d., 1 3/4 in. long,
> 22,700 lb. basic dynamic capacity."

The backup roll speed of 0.75 rpm should be sufficient to overcome any tendency toward static effects on the bearings.

Although there is no direct thrust load developed during rolling, a thrust bearing is included primarily as a factor of safety. There might arise

some thrust due to misalignment or other causes during operation of the mill.

A thrust load of 2000 lb. is assumed and the following bearing is selected for the roll (12):

> "Torrington Model NTA-4052 needle roller thrust bearing 2 1/2 in. i.d., 3 1/4 in. o.d., 5/64-in.-dia rollers, 4670 lb. basic dynamic capacity."

The thrust washer is selected on dimensional considerations and checked against the expected load (18):

> "Waldes Model 5100-250 for 2 1/2 in. dia shaft, Groove i.d. = 2.360 in., groove width = 0.086 in., thrust capacity = 5000 lb."

The washer appears to be more than satisfactory. The bearing block is used to mount the roll neck bearings and hold the roll assembly in the mill frame. The dimensions of the block are chosen as 4 1/2 in. wide, 1 3/4 in. long and 4 3/16 in. high in keeping with the bearing size and overall roll diameter. The block is subject to the roll neck reaction of 10,166 lb. which will cause the following stresses based on Equation (5.1):

$$S_b = 1452 \text{ psi}$$

$$S_s = 1387 \text{ psi.}$$

The thrust load is transmitted to one of the bearing blocks using a thrust bearing retainer as shown in Fig. 21. The retainer holds two bearings and the intermediate lip must sustain the thrust load. Setting this lip thickness at one eighth inch will result in a stress of 15,671 psi. The thrust load is transmitted from the bearing blocks to the frame using plates on the external ends of the bearing blocks. Using one eighth inch thick by one inch long plates as shown in Fig. 21, the thrust load results in a stress of 8000 psi. These plates help serve as guides for the mill also.

The universal joints must be rated for the maximum 0.0172 hp per roll requirement. Using a Boston Gear Catalog (15) and assuming a maximum operating angle of 2°, the service factor is 6.0. The joint capacity is found as

$$\text{joint capacity} = 6.0 \text{ (torque)} = 6.0 \text{ (1445)} = 8670 \text{ in.-lb.}$$

The catalog recommends joint number J175 for this service, and is sized for a seven-eighths inch diameter shaft.

Checking the stress concentration in the backup roll shaft connection results in the following, based on Fig. 12:

$$\frac{r}{d} = \frac{1\ 5/16}{7/8} = 1.5$$

$$\frac{D}{d} = \frac{3\ 1/2}{7/8} = 4.0$$

$$SCF < 2.$$

These values of $\frac{r}{d}$ and $\frac{D}{d}$ are greater than those generally shown on published curves so the value of SCF is shown on the safe side.

Equation (4.12) is used to determine the torsional shear stress on the seven-eighths inch diameter shaft.

$$(S_s)_{max} = \frac{16M}{\pi d^3}\ (SCF)$$

$$(S_s)_{max} = \frac{16(1445)}{\pi(7/8)^3}\ (2) = 21,970 \text{ psi}$$

This is slightly in excess of the design stress, but will be considered satisfactory because of the conservative selection of the stress concentration factor.

A standard square key for the 7/8-in.-dia shaft is 3/16 in. by the joint hole length of 1 19/32 in. This would result in the following stresses:

$$S_c = 5,577 \text{ psi}$$

$$S_s = 11,054 \text{ psi.}$$

As stated before, the roll has been thoroughly evaluated in the loaded zone so it will now be checked in other areas. The shear stress in the shaft end of the backup roll is found by using Equation (4.12):

$$(S_s)_{max} = \frac{16M_t}{\pi D^3} = 10,985 \text{ psi.}$$

The stress concentration factor due to the Keyway is 1.6 (9). The corresponding shear stress then becomes

$$(S_s)_{max} = 10,985\ (1.6) = 17,567 \text{ psi.}$$

The end of the roll containing the thrust washer is subject to the following stresses if 1/8 in. of material exists beyond the groove:

$$S_s = 2158 \text{ psi}$$

$$S_b = 3743 \text{ psi.}$$

A material suitable for the backup rolls is high carbon, high chromium tool steel (1.6 C, 12.0 Cr, 0.75 Mo) which has a compressive strength of 450 Ksi at a hardness of 65 Rockwell C and a tensile strength in excess of 200 Ksi. Such a material incorporates the properties of high strength, corrosion resistance, wear resistance, and hardenability and is recommended for similar applications (10). The maximum stress due to bending and torsion of 5129 psi will allow a safety factor of 39 while the contact stress of 421,500 psi will allow a safety factor of 1.07. The dynamic effects of rotation and possible shock and impact should be negligible in the case of the backup roll and on the entire assembly as well because of the very low maximum rotational speed that the mill is subjected to.

Work Roll and Bearing Block Assembly

The work roll assembly consists of the work roll, roll neck bearings, thrust bearings, bearing blocks, and separating springs as shown in Fig. 22.

ORNL DWG. 69-2322

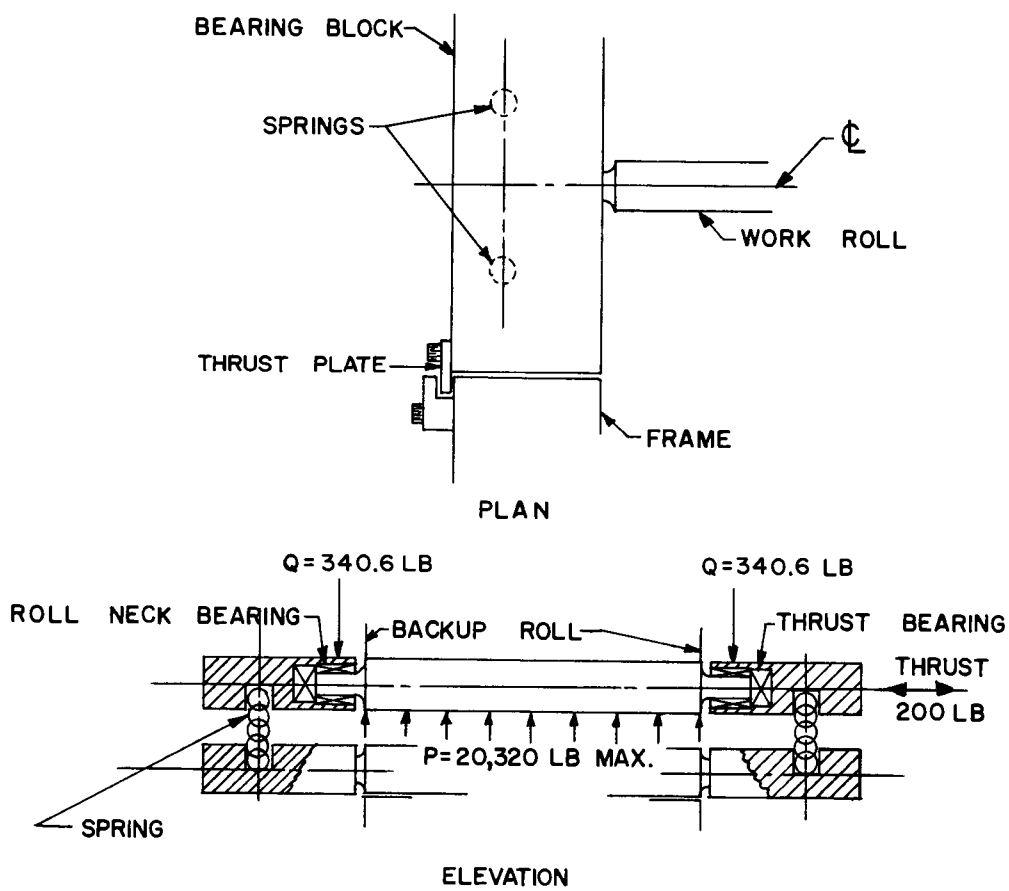

Fig. 22. Work Roll Subassembly

The roll neck bearings are subject to the end reaction of 680 lb. and maximum rotational speed of 6.37 rpm. The previously selected bearings are satisfactory and are restated below (12):

> "Torrington Model GB-47 needle roller bearing
> 7/16 in. o.d., 1/4 in. i.d., 7/16 in. long,
> 791 lb. basic dynamic capacity."

The thrust bearing is made of Sinitex dry, self-lubricating bearing material which is a teflon-molysulphide-bronze compact. The material exhibits a compressive strength of 3820 psi for a 0.001 in. set, a compressive strength of 12,900 psi for a 0.100 in. set, a coefficient of friction of 0.10 and a PV factor (pressure x velocity) of 50,000.

For an assumed 200 lb thrust load the compressive stress is

$$S_c = 4074 \text{ psi.}$$

The maximum velocity encountered at the roll neck periphery is

$$V = \text{RPM (radius) } 2\pi$$

where

$$V = \text{rubbing speed in fpm}$$

$$V = 6.37\ (1/8)(1/12)2\pi = 0.415 \text{ fpm}$$

$$PV = 4074\ (0.415) = 1689.$$

This is far below the limiting value.

The bearing block dimensions are chosen as 0.480-in. high, 4-1/2 in. wide and 1 3/4-in. long which are dictated by the roll diameter, bearing size and backup roll bearing block. The bearing block is subjected to the end reaction of 680.6 lb. which causes the following stresses based on Equation (5.1):

$$S_b = 3560 \text{ psi}$$

$$S_s = 2162 \text{ psi.}$$

The thrust reaction is sustained by the thrust plates shown in Fig. 22. Use of 1/8-in. thick by 1/2-in. long plates results in a stress of 3200 psi.

The separating springs are used to separate the work rolls to allow for insertion of the workpiece. These springs must sustain the weight of one work roll and bearing block set at the maximum roll spacing of 1/2-in. and allow full closure of the rolls.

The weight of one assembly is calculated as follows:

$$\text{Volume}_{\text{roll}} = \frac{\pi}{4}\left[2\left(\frac{9}{16}\right)\left(\frac{1}{4}\right)^2 + 4\left(\frac{1}{2}\right)^2\right] = 0.84 \text{ in.}^3$$

$$\text{Volume}_{\text{block}} = 2\left[(0.480)\left(1\,\frac{3}{4}\right)\left(4\,\frac{1}{2}\right) - \left(\frac{7}{16}\right)^2\left(\frac{\pi}{4}\right)\left(\frac{7}{16}\right)\right] = 7.40 \text{ in.}^3$$

neglecting the weight of the bearings

total weight = volume (density)

total weight = (0.84)(0.538) + (7.40)(0.28)

total weight = 2.52 lb.

The weight is divided among four springs, each of which carries 0.63 lb.

A Lee Spring Company catalog is used to select the following springs (16):

> "Lee Spring No. LC-016B-14, 0.180 in. o.d., 0.016 in. dia wire, 1 1/2 in. free length, 1.2 lb./in. spring rate, 0.342 in. solid height."

The deflection per spring at maximum separation is

$$1.5 - \frac{0.63}{1.2} = 0.98 \text{ in.}$$

The allowable deflection beyond this point is

0.98 in. - solid height = 0.98 - 0.342 = 0.64 in.

which is in excess of the 1/2 in. requirement. The springs are spaced across the blocks at 2-in. intervals at a distance of 3 1/4 from the roll center. The springs are set in holes which are 3/16-in. dia and 1/4-in. deep.

The work roll is to be fabricated of tungsten carbide because of its rigidity and extremely high compressive strength. The maximum stress due to bending of 185,064 psi allows a safety factor of about 1.35 in bending while the maximum contact stress of 550,000 psi will give a safety factor of 1.25.

Various references state that the maximum compressive strength may be exceeded in the center of the zone of contact due to constraint of the material and its chief effect is on the life of the element, but this effect is not at all well defined. One reference (8) states that ball bearings have been known to withstand contact stresses of up to 750 ksi during

fatigue tests. The chief effect, therefore, of the high contact stresses on the rolls can be expected to be their lifetime (19) though the number of instances these rolls are subject to these most severe conditions will be rather low.

Screwdown Mechanism Assembly

The screwdown mechanism is used to force the rolls down on the workpiece whereas the springs are intended to separate the rolls when screws are withdrawn. The bearing blocks are adjusted vertically through the use of a manually adjusted worm gear drive placed above the mill stand as shown in Fig. 23. The vertical screws are subjected to a maximum load equal to the 10,160 lb. end reaction on the backing roll. The worm gear drive units are probably never subjected to this load; however, this will be used as the overall design load.

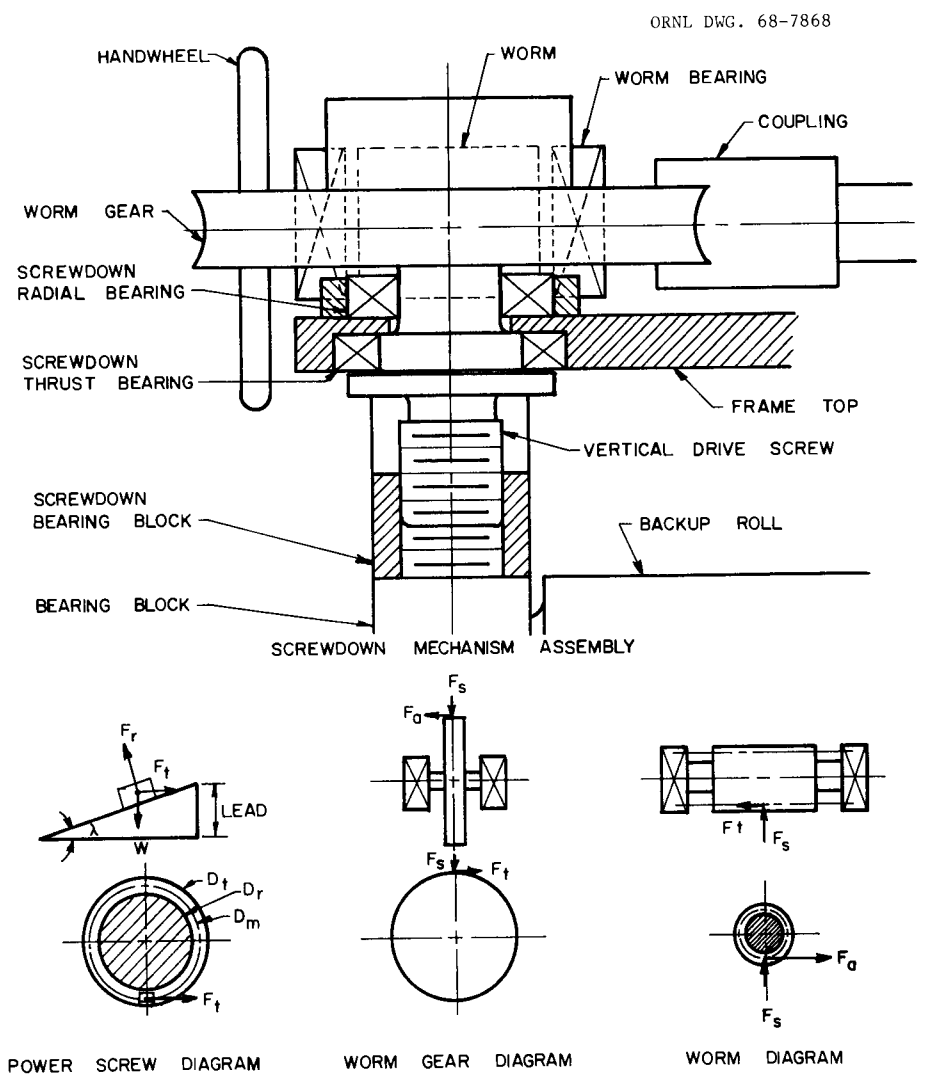

Fig. 23. Screwdown Mechanism

The components of this assembly are the screwdown bearing block which transmits motion and force from screw to roll bearing blocks, the power screw, the worm and worm gear which transmit the handwheel adjustments to the screws and the coupling which when disconnected allows the screws to be adjusted independently for the periodic leveling of the rolls.

The power screw must work against the reaction and have a maximum travel of 1/2 in. The screw is a square threaded type, and the design stress is considered as 20 Ksi.

Using the standard formula (9)

$$T = \frac{W d_m(\tan \lambda + \mu)}{2(1 - \mu \tan \lambda)} \tag{5.2}$$

W = load, lb.

d_m = mean thread diameter, in.

λ = lead angle

μ = coefficient of friction = 0.125.

The screw is first checked for compressive stress under load.

$$\frac{W}{S_c} = A_r = \frac{\pi}{4} d_r^2 \tag{5.3}$$

where d_r = root diameter, in.

$$d_r^2 = \frac{4}{\pi} \frac{W}{S_c}$$

$$d_r = \sqrt{\frac{4}{\pi} \frac{10,160}{20,000}} = 0.806.$$

A standard single square thread of 1 1/4-in. nominal size, 1-in. minor diameter and 3 1/2 threads per in. is chosen for which

$$\lambda = \tan^{-1} \frac{\text{Lead}}{\pi d_m}$$

$$\lambda = \tan^{-1} \left(\frac{1}{3\ 1/2}\right)\left(\frac{1}{\pi \times 1\ 1/8}\right) = \tan^{-1} (0.081) \tag{5.4}$$

$$\lambda = 4.64^\circ$$

therefore,

$$T = \frac{Wd_m(\tan \lambda + \mu)}{2(1 - \mu \tan \lambda)}$$

$$T = \frac{10,160 \times 1\ 1/8\ (0.081 + 0.125)}{2(1 - 0.125 \times 0.081)}$$

$$T = 1190 \text{ in.-lb.}$$

The shear stress on a one-inch-diameter shaft from Equation (4.12) is

$$s_s = \frac{16T}{\pi d_r^3}$$

$$s_s = \frac{16 \times 1190}{\pi(1)^3}$$

$$s_s = 6061 \text{ psi.}$$

The screw is self-locking if the condition of $\mu > \tan \lambda$ holds, as it does in this case (9).

The nut or screwdown bearing block is designed for bearing stress from the following relationship (9):

$$N_t = \frac{4W}{s_b \pi(d^2 - d_r^2)} \tag{5.5}$$

where

N_t = number of threads required in the nut.

$$N_t = \frac{4 \times 10,160}{20,000 \times \pi(1\ 1/4^2 - 1^2)}$$

$$N_t = 1.15.$$

The minimum length of nut required is

$$\frac{1.15}{3\ 1/2} = 0.329 \text{ in.}$$

The overall depth of the nut is set at one inch so that at the maximum roll gap of 1/2 inch, there is still 1/2 inch of engagement.

The thread is checked for shear stress as follows:

$$\text{thickness of thread} = 1/2 \text{ lead}$$

$$= 1/2 \frac{1}{(3\ 1/2)} = 0.143 \text{ in.}$$

The required thread length is

$$s_s = \frac{W}{As} = \frac{W}{(0.143)\ \text{thread length}}$$

$$\text{Thread length} = \frac{10,160}{(0.143)20,000} = 3.55 \text{ in.}$$

The number of threads is

$$N_t = \frac{\text{thread length}}{\pi d_r}$$

$$N_t = \frac{3.55}{\pi \times 1}$$

$$N_t = 1.13$$

or

$$\frac{1.13}{3.5} = 0.323 \text{ in. of screw length.}$$

The worm gear is required to turn the power screw and so must be capable of transmitting the maximum torque of 1190 in.-lb. Reference is made to the diagram of Fig. 23 which shows the separating force, F_s, the axial force, F_a, and the tangential force, F_t. These forces are, of course, acting on both the worm and worm gear. Speed of these components is of no consequence since all adjustments are made manually.

A worm and worm gear are nominally selected to fit the 1 in. screw shaft and these are checked to determine their suitability (15):

Worm Gear: 14 1/2° PA, 8P, single thread, 40 teeth, 5 in. PD, 1 in. hole.

Worm: 14 1/2° PA, 8P, single thread, 1.5 in. PD, 1 3/4 in. face, 3/4 in. hole, 3/16 in. keyway.

From the required torque (9)

$$F_t = \frac{\text{torque}}{1/2\ PD_{wg}} \qquad (5.6)$$

$$F_t = \frac{1190}{1/2\ (5)}$$

$$F_t = 476 \text{ lb.}$$

The lead angle

$$\lambda = \tan^{-1} \left(\frac{1}{8 \times \pi \times 1.5}\right) \tag{5.7}$$

$$\lambda = 1.52^\circ.$$

The separating force, where ϕ_n = pressure angle is

$$F_s = \frac{F_t \sin \phi_n}{\cos \phi_n \cos \lambda - f \sin \lambda}$$

$$F_s = \frac{476 \times \sin 14\ 1/2^\circ}{\cos 14\ 1/2^\circ \times \cos 1.52^\circ - (0.125) \sin 1.520}$$

$$F_s = 123 \text{ lb.} \tag{5.8}$$

The axial force is

$$F_a = F_t \left(\frac{\cos \phi_n \sin \lambda + f \cos \lambda}{\cos \phi_n \cos \lambda - f \sin \lambda}\right) \tag{5.9}$$

$$F_a = 476 \left(\frac{\cos 14\ 1/2^\circ \sin 1.52^\circ + (0.125) \cos 1.52^\circ}{\cos 14\ 1/2^\circ \cos 1.52^\circ - (0.125) \sin 1.52^\circ}\right)$$

$$F_a = 74.5.$$

The power screw and worm gear bearing is subject to a thrust load of 10,160 lb. and a radial load of 123 lb. with a shaft size of 1 in. These bearings are selected as (13, 15)

> "Thrust bearing, SKF No. 907 ball thrust bearing, 1.378 in. i.d. x 2.44 in. o.d. x 0.709 in. thick 15,000 lb. basic static capacity."

> "Radial bearing, Boston No. 1641 ball bearing, 1 in. i.d. x 2 in. o.d. x 9/16 in. thick, 990 lb. at 50 rpm."

The worm bearings are subject to an axial load of 476 lb. and a radial load of 123 lb. The shaft size is nominally 3/4 in. and the worm is supported on either side by a bearing since the worm shaft may be separated for individual screw adjustment. These bearings are selected as (14)

"Timken roller bearing No. A6075/A6157, 345 lb. radial capacity and 356 thrust capacity at 500 rpm, 3/4 in. i.d. x 1.5745 in. o.d. x 0.473 in. thick."

Both the worm and worm gear are secured to their respective shafts by keys. These are now checked for shear stress.

The worm key is given as 3/16 in. x 3/16 in. x 1 3/4 in. long. The shearing force on the key is found from the relationship (9)

$$F_s = \frac{W_t PD}{\text{shaft dia}}$$

$$F_s = \frac{74.5 \times 1.5}{0.75}$$

$$F_s = 149 \text{ lb.}$$

The corresponding shear stress is

$$s_s = \frac{F_s}{A_s}$$

$$s_s = \frac{149}{3\ 1/6 \times 1\ 3/4}$$

$$s_s = 454 \text{ psi.}$$

The shear stress on the worm shaft obtained from Equation (4.12)

$$s_s = \frac{16\ M_t}{\pi d^3}$$

$$s_s = \frac{16\ (149 \times 3/8)}{\pi (3/4)^3}$$

$$s_s = 847 \text{ psi.}$$

The worm gear key is given as 1 5/8 in. long x 1/4 in. square and is subjected to a shearing force of

$$Fs = \frac{M_t}{d/2}$$

$$Fs = 1190/1/2$$

$$Fs = 2380 \text{ lb.}$$

The corresponding shear stress is calculated to be

$$s_s = \frac{F_s}{A_s}$$

$$s_s = \frac{2380}{1\ 5/8 \times 1/4}$$

$$s_s = 5858 \text{ psi.}$$

Since the shear stresses of both keys is relatively safe, the bearing stress will be neglected.

The adjustment ratio of the screwdown mechanism is such that one complete turn of the handwheel will move the upper work roll 0.00714 in.

Mill Stand

The function of the mill stand is to support and tie together all of the operating elements of the rolling mill. The components of the stand are simply the base, sides and top, and can be seen in Fig. 20.

The components of the stand are fabricated of relatively heavy plate such that there is very low stress on these components. The sides of the mill are subject to the reactive load of 10,166 lb. each. The thickness of the side member is selected as 1 1/2 in. based on the bearing block dimensions. Allowing a 4 1/2 in. wide bearing block slot, the total width is set at 9 1/2 in. on a cross-sectional area of

$$A = 1\ 1/2\ (9\ 1/2 - 4\ 1/2) = 7.5 \text{ in.}^2.$$

The resultant stress is then

$$s = \frac{Q}{A}$$

$$s = \frac{10,160}{7.5}$$

$$s = 1355 \text{ psi tensile.}$$

The side is secured to top and bottom plates by bolts which, if four 3/4 in. bolts are used for each plate, are subjected to a tensile load of

$$\frac{10,160}{4} = 2540 \text{ lb.}$$

Using a 3/4 in. NC bolt of ten threads per inch and a stress area of 0.3340 in.^{2}, the resultant bolt stress is (9):

$$s = \frac{F}{A}$$

$$s = \frac{2540}{0.3340}$$

$$s = 7605 \text{ psi.}$$

The top and bottom plates need be only large enough to sustain the assumed thrust load of 2000 lb. If 1 in. plate 9 1/2 in. wide is used, the resulting stress is

$$s = \frac{F}{A}$$

$$s = \frac{2000}{1 \times 9\ 1/2}$$

$$s = 211 \text{ psi.}$$

The material selected for the frame is stainless steel, primarily for its corrosive resistant properties.

Mill Drive

The mill drive will probably be located outside the enclosure in which the actual mill stand is placed. The drive arrangement is designed very generally since it has not been decided how or where the mill system is to be installed.

The requirements on the drive system are as listed below and shown on Fig. 24.

Torque per roll = 1445 in.-lb.
Speed range = 0 to 0.75 rpm
Horsepower = 0.0172 hp per roll max.

The drive shafts and universal joints are kept at 7/8 in. dia size as determined in the backup roll calculations. The roll drive gears are spur type and are selected to give a center-to-center distance appropriate to the roll spacing and to carry the required horsepower. The drive unit and drive spur gears are selected on the horsepower and speed basis. The center-to-center distance of the roll drive gears is picked at 5 1/2 in. and the gears are selected nominally as (15)

"Steel spur gears, 4P, 2 in. face, 14 1/2° PA,
5 1/2 in. PD, 22 teeth, 1 1/8 in. hole."

ORNL DWG. 68-7869

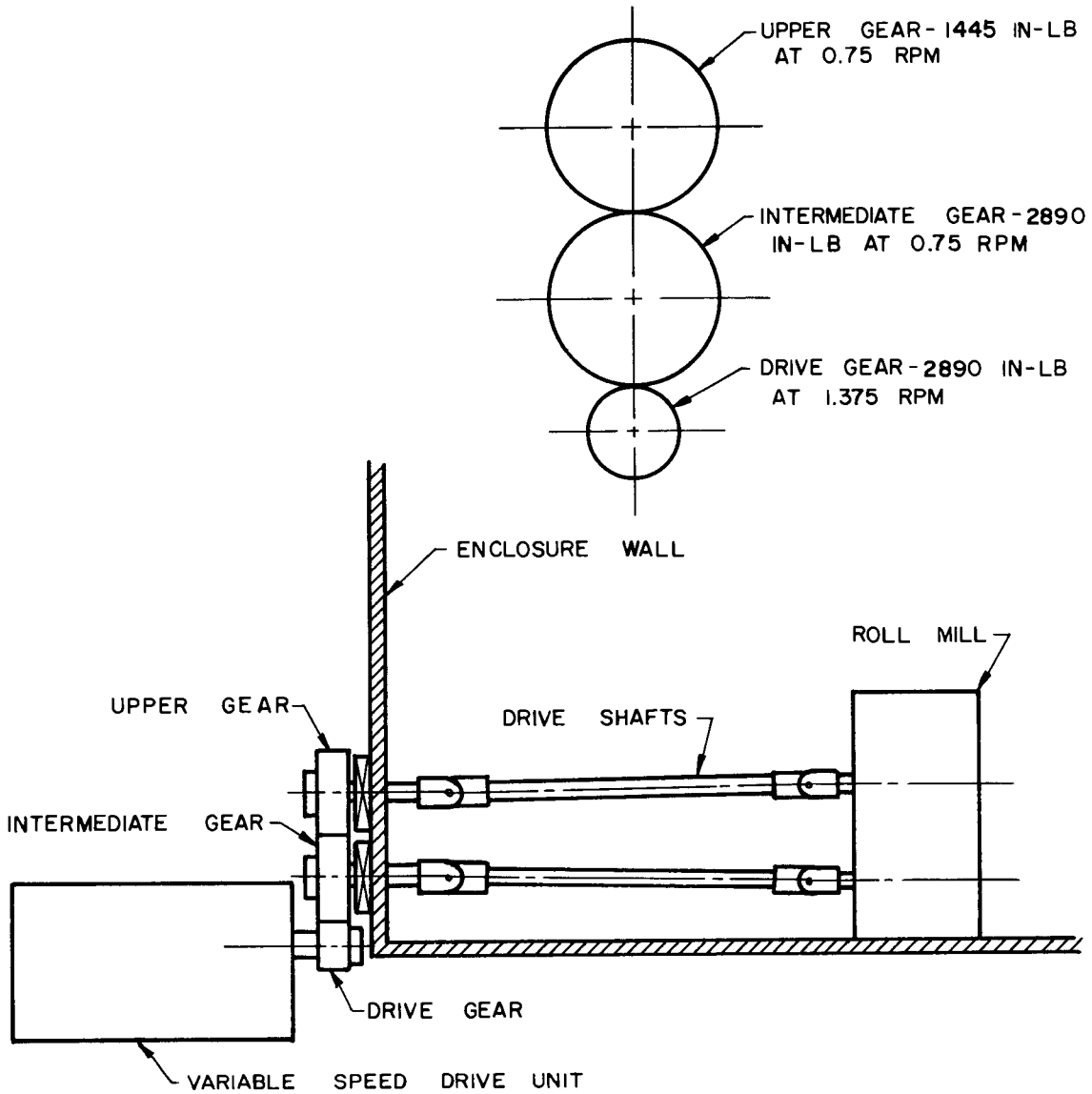

Fig. 24. Mill Drive System

The middle gear must carry the load transmitted to its own shaft plus that transmitted to the parallel shaft which total 2890 in.-lb. at 0.75 rpm or 0.0344 hp. The maximum transmitted force (F_t) is found from the relationship (9)

$$F_t = \frac{63,000 \text{ hp}}{\left(\frac{PD}{2}\right) n}$$

$$F_t = \frac{63,000 \times 0.0344}{(\frac{5.5}{2})(0.75)}$$

$$F_t = 1050 \text{ lb.} \tag{5.10}$$

The pitch line velocity, V_m, is found from

$$V_m = \pi PDn$$

$$V_m = \pi(\frac{5.5}{12})(0.75) \tag{5.11}$$

$$V_m = 1.08 \text{ fpm.}$$

The dynamic load (F_d) is estimated as

$$F_d = \frac{(600 + V_m)}{400} F_t$$

$$F_d = \frac{(600 + 1.08)}{400} (1050)$$

$$F_d = 1578 \text{ lb.} \tag{5.12}$$

The tooth strength (F_s) must be selected so that $F_s \geq F_d$ from the relationship

$$F = \frac{sbY}{PD} \tag{5.13}$$

where, Y = Lewis' constant = 0.292, and

$$s = \frac{F_s PD}{by}$$

$$s = \frac{1578 \times 5.5}{2\ (0.292)}$$

$$s = 14,861 \text{ psi.} \tag{5.14}$$

The drive gear is nominally selected as a steel spur gear, 4P, 2 in. face, 14 1/2° PA, 3.0 in. PD, 12 teeth, 1 1/8 in. hole (15). The dynamic and transmitted forces and the pitch line velocity are the same as above, but the rotational speed, tooth stress, and horsepower are checked using Equations (5.11) and (5.14).

$$n = \frac{V_m}{\pi PD}$$

$$n = \frac{1.08}{\pi \times 3/12}$$

$$n = 1.375 \text{ rpm}$$

$$s = \frac{F_s PD}{b\ Y}$$

$$s = \frac{1578 \times 3}{2\ (0.192)}$$

$$s = 12,328 \text{ psi}$$

$$hp = \frac{F_t\ (PD/2)n}{63,000}$$

$$hp = \frac{1050\ (3/2)1.375}{63,000}$$

$$hp = 0.0344.$$

The stress on the gear teeth requires that steel gears be used rather than cast iron.

The service these gears are subjected to will be intermittant. Considering wear, the only criteria is that $F_s \geq F_d$ which holds true in this case (9).

The drive unit is selected at a maximum output of 0.0344 hp and 1.375 rpm. A unit capable of meeting these requirements is outlined below (15):

> "Boston worm gear motorized speed reducer, Model MW 126-1200-CS, 1/6 hp motor, 1.5 output rpm, 0.037 output horsepower."

The universal joints are built so that one end of the intermediate shaft is allowed to slide within the joint axially to allow vertical adjustment of the rolls.

6. EVALUATION OF THE MILL

BACKGROUND

The purpose of this section is to evaluate the performance of the rolling mill built to the design specified in the preceding sections. The design specification for the mill, as previously stated, is to reduce a stainless

steel sheet to a thickness of 0.0005 in. with a maximum variation across the sheet of 10%. The deflection and stress analysis of the rolls were based on the condition of maximum loading and this same condition will be evaluated in the present section.

The evaluation of the mill was based on two types of measurements. The first of these was the measurement of the variation in the workpiece under the condition of maximum reduction which reflected the deflection developed in the rolls as determined in Section 3. The second measurement made was the final thickness and uniformity achievable with the mill. The workpiece samples were 4 in. wide sheets of Type 304L stainless steel of as small a thickness as was readily available.

The first measurement, deflection, was made by first rolling the starting material to a thickness of less than 0.002 in. with a larger mill. This piece was then subjected to the maximum reduction or condition of maximum deflection. The thickness of the workpiece was then measured at several points across its width to determine its variation in thickness due to roll deflection. Several of these sets of measurements were made and a comparison made with the mathematically determined deflection.

Final thickness and uniformity measurements were made by making subsequent passes on the above samples and recording the achieved uniformity and passes required.

After all measurements were taken and tabulated, the mill was analyzed with respect to theoretical and measured maximum variation and uniformity and an evaluation of the mill performance was made.

MEASUREMENTS

Workpiece Variation

The samples used in these tests were 1 in. wide by 4 in. long pieces which were rolled from an initial thickness of 0.019 in. to a final thickness of less than 0.002 in. in a larger mill. A reduction of 90% in Type 304L stainless steel insures that it reaches full hardness and maximum compressive strength (2). From this point samples were fed through the small mill such that the 4 in. sample dimension coincided with the 4 in. dimension of the rolls. The screwdown mechanism was adjusted all the way down to insure maximum force being exerted across the sample which resulted in maximum deflection. Twenty samples were fed through the mill and thickness measurements were taken at 1/2 in. intervals across the 4 in. sample width as indicated in Fig. 25 with the dial indicator thickness gage shown in Fig. 26. The measurement taken for each of the twenty samples are shown in Table 9. By using a small gage which subdivided the dial indicator increments into five equal parts, as accuracy of 0.00002 in. in the readings was obtained.

ORNL DWG. 69-2323

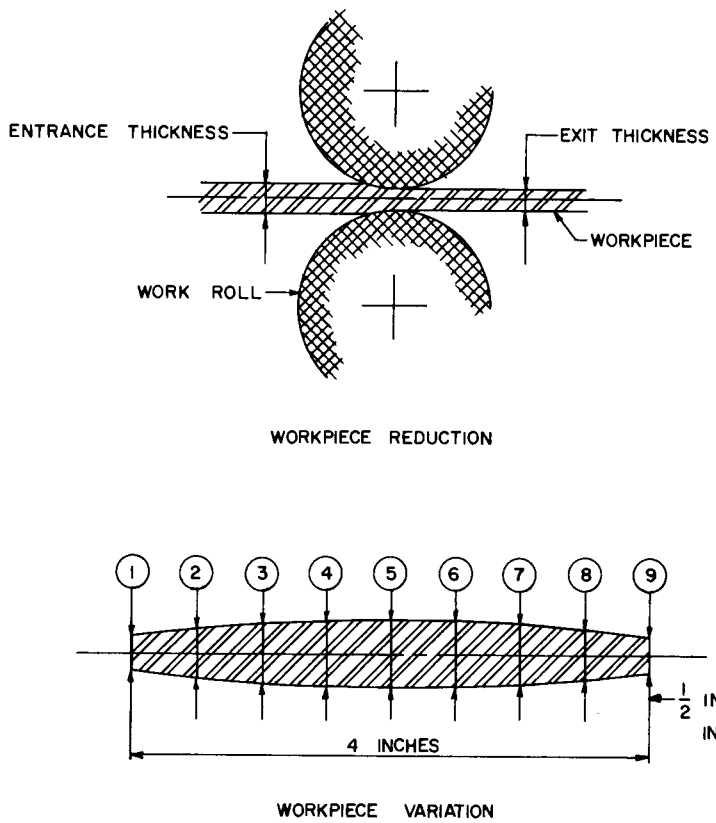

Fig. 25. Workpiece Measurements

ORNL DWG. 69-2324

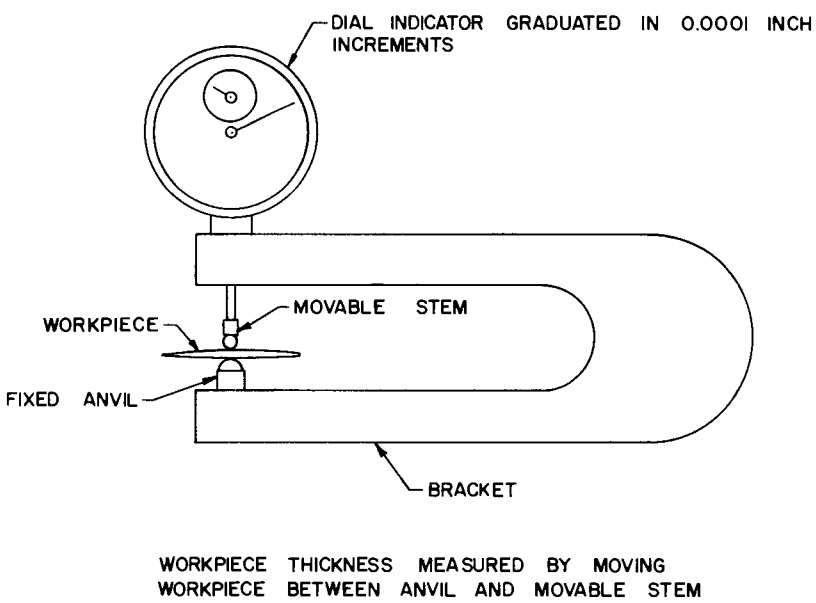

Fig. 26. Workpiece Thickness Measuring Device

Table 9. Workpiece Variation at Maximum Reduction
(4-In. Wide Type 304L Stainless Steel Sample)

Sample No.	Sample Thickness at Specified Point (Fig. 25) in. x 10^{-4}								
	1	2	3	4	5	6	7	8	9
1	5.0	6.6	7.4	8.0	8.4	8.0	7.6	6.4	5.0
2	5.0	6.2	7.4	7.8	8.2	7.8	7.2	6.4	5.0
3	5.0	6.2	7.2	7.8	8.4	7.8	7.4	6.4	5.0
4	5.0	6.2	7.4	7.8	8.2	8.0	7.6	6.6	5.0
5	5.0	6.2	7.2	7.6	8.0	7.8	7.2	6.4	5.0
6	5.0	6.2	7.2	8.0	8.2	7.8	7.4	6.4	5.0
7	5.0	6.4	7.4	8.0	8.2	7.8	7.4	6.4	5.0
8	5.0	6.4	7.4	7.8	8.0	7.6	7.2	6.2	5.0
9	5.0	6.2	7.6	8.2	8.4	8.0	7.4	6.2	5.0
10	5.0	6.4	7.4	8.0	8.2	8.0	7.4	6.2	5.0
11	5.0	6.6	7.6	8.0	8.4	8.0	7.8	6.6	5.0
12	5.0	6.4	7.4	7.8	8.2	8.0	7.4	6.2	5.0
13	5.0	6.2	7.2	7.8	8.0	7.8	7.2	6.2	5.0
14	5.0	6.2	7.2	7.8	8.2	7.8	7.4	6.4	5.0
15	5.0	6.2	7.2	7.8	8.0	7.8	7.4	6.4	5.0
16	5.0	6.6	7.4	8.0	8.4	8.2	7.4	6.6	5.0
17	5.0	6.6	7.6	8.0	8.2	8.0	7.6	6.6	5.0
18	5.0	6.6	7.4	7.8	8.2	7.8	7.2	6.6	5.0
19	5.0	6.2	7.6	8.0	8.4	8.0	7.6	6.6	5.0
20	5.0	6.2	7.4	7.8	8.0	7.6	7.2	6.0	5.0

Workpiece Uniformity

Ten of the samples used in the above test were run through the mill several more times to insure that the desired uniformity of 10% could be achieved. Table 10 shows final uniformity and passes required to achieve this. Normally the final thickness is rolled in very small steps. The large reduction taken in the first test distorts the sample rather badly and may cause edge cracking, wrinkling, or bunching of long samples. Many of the materials rolled are very fragile at the thickness being investigated and must be rolled very carefully.

Discussion of Results

Figure 27 makes a comparison between the thickness measurements of Table 9 and the calculated roll deflection. The shaded area includes all the measured points and the solid curve represents the previously calculated roll deflection. Both of these are drawn as total deflection curves including the deflection about both sides of the sample and are based on the edge thickness of 0.0005 in. The thicknesses of the sample edges are not all identical, but very close to 0.0005 in. and are corrected to this value for purposes of comparison.

Table 10. Attainment of Specified Final Thickness

Sample No.	Edge Thickness in. x 10^{-4}	Central Thickness in. x 10^{-4}	No. of Passes	% Variation
1	4.8	5.2	28	8.3
2	5.0	5.5	26	10.0
3	4.8	5.2	26	8.3
4	4.8	5.2	33	8.3
5	5.0	5.5	35	10.0
6	5.0	5.5	30	10.0
7	5.0	5.5	38	10.0
8	5.0	5.5	28	10.0
9	4.8	5.2	30	8.3
10	5.0	5.4	35	8.0

ORNL DWG. 69-2325

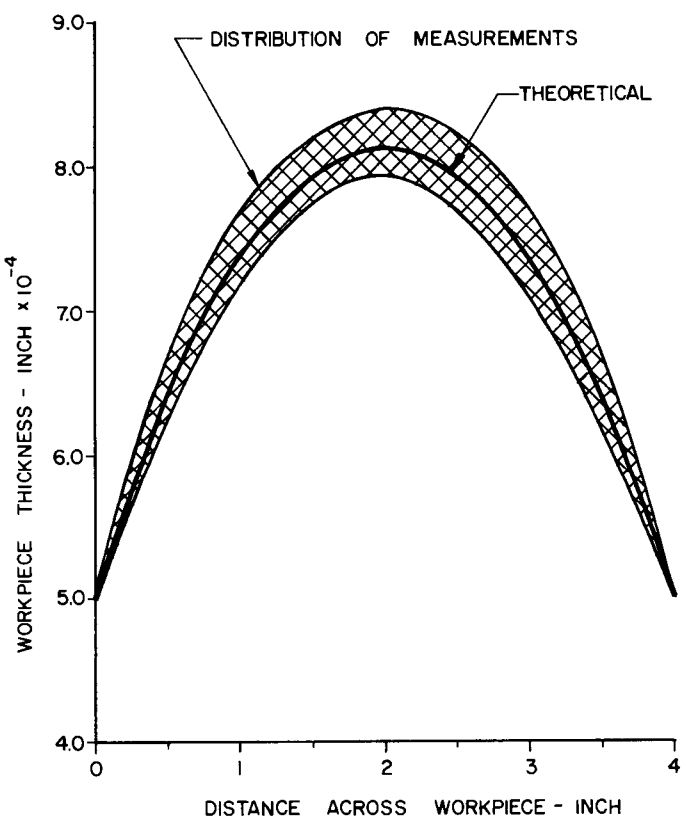

Fig. 27. Workpiece Thickness Variation Comparison as Measured with the Modified Indicator

The calculated curve falls within the bounds of the shaded area indicating that the actual roll deflection is very close to the calculated deflection. The actual midpoint variation from the edge thickness of 0.0005 in. varies from 60 to 68% compared to 63% for the calculated curve.

The attainment of the final thickness of 0.0005 in. with a maximum variation of 10% was simply a matter of passing the samples through the rolls until the desired uniformity was obtained. It appears that it would take ~40 passes to achieve the desired uniformity although in some cases fewer passes are required.

These numbers are based on starting with a piece of ~60% variation. Normally a material of the type to be used in this mill is reduced in extremely small steps so that its uniformity will remain at a maximum throughout the reduction process and therefore there will be very little distortion of the sample.

Throughout the tests, observation of the roll surfaces was maintained to detect any degradation of work or backup roll surfaces due to the effects of the contact stresses. No detrimental effects on the rolls or other mill components were noted during the tests described in this section or in several preliminary and subsequent reductions. Initially a set of tool steel work rolls were inserted to check out the operation of the mill to prevent any possible damage to the expensive tungsten carbide rolls. After only one reduction of a stainless steel sample to the 0.0005 in. range, several small indentations appeared in the work roll surface. No marks of any kind have appeared since installation of the carbide rolls. Figure 28 is a photograph of the completed rolling mill used for the evaluation described above.

7. SUMMARY AND CONCLUSIONS

The preceding sections have been used to illustrate the design, analysis, and testing of a small special purpose cold rolling mill which is to be used in the fabrication of ultrathin isotopic foils for physics research work. The major emphasis has been on analysis of the rolls with respect to deflection, the resulting stresses developed within the rolls and at points of contact between rolls and in the work zone. Subsequent sections have dealt with the general design of the associated mill stand components and testing of the entire assembly to see that the design requirements had been met.

The most critical areas in the mill were found to be in the contact zones of both the backup and work rolls; however, after several hours of operation of the mill at the most extreme conditions, there have been no indications of surface deterioration on any of the roll surfaces.

All the tests run on the subject mill to the present time indicate that the capabilities of this piece of equipment are quite satisfactory. All the factors discussed in the preceding sections such as deflection and

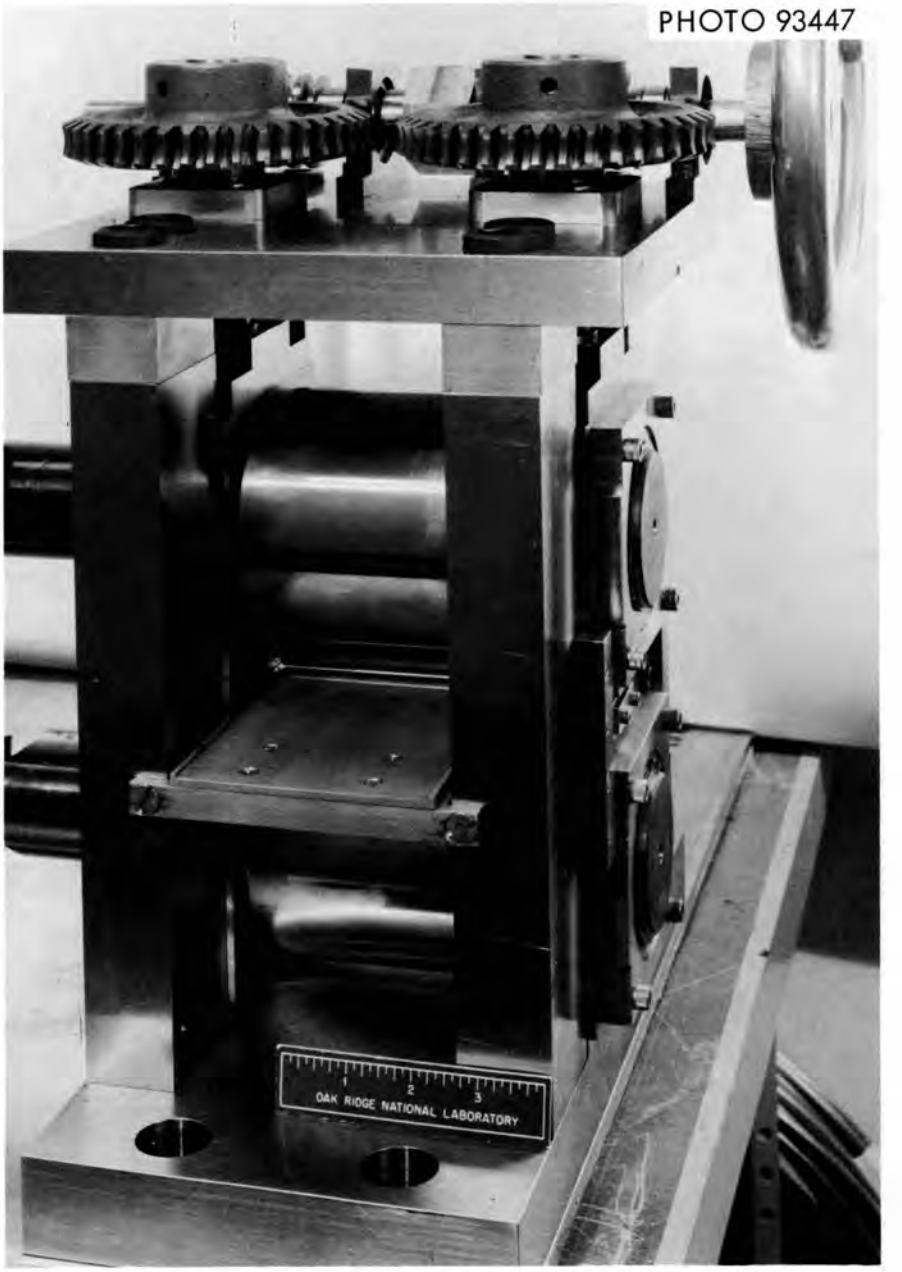

Fig. 28. The Completed Rolling Mill

attainment of the final design thickness and uniformity seem to be quite close to the predicted limits. The important item of interest to the user is the thickness of the finished product and to date this has been entirely satisfactory. As stated before, the mill has been operated for several hours and has shown no signs of deterioration of the roll surfaces which have been calculated to be the areas most subject to failure. Experience has shown that after a period of time, any similar rolling mill will begin to exhibit small indentations in the work roll and backup roll surfaces;

however, this can be corrected by regrinding the roll surfaces at the first sign of any such defect.

It should be noted that the life of the rolling mill will depend upon the workpiece reduction to which the rolls are subjected. The conditions under which the mill has been analyzed in this report are those of maximum reduction and correspondingly maximum stress. The life of the mill should be lengthened considerably by restricting workpiece reduction to a minimum and therefore reducing the stresses developed within the rolling mill components.

BIBLIOGRAPHY

1. Metals Handbook, Vols. 1 and 2, American Society for Metals, Metals Park, Ohio, 1964.

2. L. R. Underwood, The Rolling of Metals, Vol. 1, Chapman and Hall, London, 1952.

3. M. D. Stone, "Rolling of Thin Strip," Iron Steel Engr. 30, 61-75 (1953).

4. Hugh Ford, "Researches into the Deformation of Metals by Cold Rolling," Proc. Inst. Mech. Engrs. (London) 159 (1948), 115.

5. D. R. Bland and Hugh Ford, "The Calculation of Roll Force and Torque in Cold Strip Rolling with Tensions," Proc. Inst. Mech. Engrs. 159 (1948), 145.

6. S. Timoshenko and J. N. Goodier, Theory of Elasticity, pp. 377-382, McGraw-Hill, New York, 1951.

7. S. Timoshenko, Strength of Materials, Parts I and II, Van Nostrand, Princeton, N. J., 1956.

8. R. J. Roark, Formulas for Stress and Strain, McGraw-Hill, New York, 1965.

9. V. M. Faires, Design of Machine Elements, Macmillan, New York, 1955.

10. C. H. Samans, Engineering Metals and Their Alloys, pp. 776-779, Macmillan, New York, 1957.

11. Properties of Kennametal Hard Carbide Alloys, pp. 10-11, Kennametal, Inc., Latrobe, Pa., 1965.

12. Torrington Bearing Catalog 567, pp. 22, 28, 86, The Torrington Co., Torrington, Conn., 1967.

13. SKF General Catalog No. 425, p. 154, SKF Industries, Inc., Philadelphia, 1960.

14. The Timken Engineering Journal, p. 235, Section 1, Timken Roller Bearing Co., Canton, Ohio, 1960.

15. Boston Gear Power Transmission Products Catalog 58, Boston Gear Works, Quincy, Mass., 1963.

16. Lee Spring Co. Catalog No. 109-1967, p. 20, Leetronics, Inc., Brooklyn, 1967.

17. Extreme Temperature, Dry, Self-Lubricating Bearings, Booker-Cooper, Inc., N. Hollywood, Calif., 1966.

18. Waldes Truarc Retaining Rings and Assembly Tools, pp. 34-35, Waldes Kohinoor, Inc., Long Island City, New York, 1963.

19. Norman M. Wickstrand, Engineering Department, The Torrington Company, Torrington, Conn., private communication March 1968.

20. Sendzimir Cold Rolling Mills, Waterbury Farrel Co., Cheshire, Conn., 1966.

21. Fenn Rolling Mills, Catalog FRM-58, Fenn Manufacturing Co., Newington, Conn., 1958.

APPENDIX A

Properties of Materials

1. Tungsten Carbide Properties

Kennametal Grade K96 Tungsten Carbide (11)

Hardness	92.0 Rockwell A
Transverse Rupture Strength	250×10^3 psi
Modulus of Elasticity	91.6×10^6 psi
Compressive Strength	690×10^3 psi
Poisson's Ratio	0.211
Shear Modulus	37.8×10^6 psi
Tensile Strength	205,000 psi
Shear Strength	~225,500 psi
Specific Gravity	14.9

2. Type 304L Stainless Steel (1)

Tensile Strength (annealed)	80×10^3 psi
Tensile Yield (fully hardened)	140×10^3 psi
Modulus of Elasticity (tension)	28×10^6 psi
(torsion)	12.5×10^6 psi
Density	0.29 lb/in.^{3}

APPENDIX B

List of Symbols

A	=	Area
D	=	Diameter
E	=	Modulus of elasticity
F	=	Force
G	=	Shear modulus
I	=	Moment of inertia
L	=	Length
M	=	Moment
N	=	Number of threads
P	=	Total force on rolls
Q	=	End reaction
R	=	Radius
S	=	Unit stress or pressure
T	=	Torque
V	=	Shear force, volume, or velocity
k	=	Shear constant
b	=	Width of workpiece or contact area
d	=	Diameter
n	=	Rotational speed
r	=	Radial distance
s	=	Unit stress
t	=	Thickness of workpiece
w	=	Unit beam load
x	=	Linear coordinate
y	=	Linear coordinate
z	=	Linear coordinate
α (alpha)	=	Contact angle
β (beta)	=	Angular coordinate
θ (theta)	=	Angular coordinate
λ (lambda)	=	Lead angle
μ (mu)	=	Coefficient of friction
ν (nu)	=	Poisson's ratio
ϕ (phi)	=	Angular coordinate

Note: The above symbols are further defined in the sections by the use of subscripts and subsequent definitions.

DISTRIBUTION

1-3. Central Research Library
4-5. ORNL — Y-12 Technical Library
Document Reference Library
6-10. Laboratory Records Department
11. Laboratory Records, ORNL R.C.
12. A. L. Allen
13. M. A. Baker
14. W. A. Blevins
15. W. F. Buker
16. E. A. Davis
17. R. J. DeBakker
18. D. T. Dice
19. R. M. Farnham
20. C. L. Fox
21-40. J. R. Gibson
41. J. H. Gillette
42. J. R. Gissel
43. H. H. Haymond
44. P. W. Hembree
45. R. F. Hibbs
46. K. E. Jamison
47. R. G. Jenness
48. H. F. Keesee
49. E. H. Kobisk
50. C. E. Murphy
51. H. H. Nichol
52. M. E. Ramsey
53. A. F. Rupp
54. A. M. Weinberg
55. Laboratory and University Div., ORO
56-70. DTIE, OR