MARTIN MARIETTA ENERGY SYSTEMS LIBRARIES
3 4456 0286736 0

CENTRAL RESEARCH LIBRARY
DOCUMENT COLLECTION

1

ORNL-4384
UC-25 – Metals, Ceramics, and Materials

SOME EDDY-CURRENT PROBLEMS AND THEIR INTEGRAL SOLUTIONS

OAK RIDGE NATIONAL LABORATORY
CENTRAL RESEARCH LIBRARY
DOCUMENT COLLECTION
LIBRARY LOAN COPY
DO NOT TRANSFER TO ANOTHER PERSON
If you wish someone else to see this document, send in name with document and the library will arrange a loan.

OAK RIDGE NATIONAL LABORATORY
operated by
UNION CARBIDE CORPORATION
for the
U.S. ATOMIC ENERGY COMMISSION

Printed in the United States of America. Available from Clearinghouse for Federal
Scientific and Technical Information, National Bureau of Standards,
U.S. Department of Commerce, Springfield, Virginia 22151
Price: Printed Copy $3.00; Microfiche $0.65

LEGAL NOTICE

This report was prepared as an account of Government sponsored work. Neither the United States, nor the Commission, nor any person acting on behalf of the Commission:

A. Makes any warranty or representation, expressed or implied, with respect to the accuracy, completeness, or usefulness of the information contained in this report, or that the use of any information, apparatus, method, or process disclosed in this report may not infringe privately owned rights; or

B. Assumes any liabilities with respect to the use of, or for damages resulting from the use of any information, apparatus, method, or process disclosed in this report.

As used in the above, "person acting on behalf of the Commission" includes any employee or contractor of the Commission, or employee of such contractor, to the extent that such employee or contractor of the Commission, or employee of such contractor prepares, disseminates, or provides access to, any information pursuant to his employment or contract with the Commission, or his employment with such contractor.

ORNL-4384

Contract No. W-7405-eng-26

METALS AND CERAMICS DIVISION

SOME EDDY-CURRENT PROBLEMS AND THEIR INTEGRAL SOLUTIONS

C. V. Dodd W. E. Deeds
J. W. Luquire W. G. Spoeri

APRIL 1969

OAK RIDGE NATIONAL LABORATORY
Oak Ridge, Tennessee
operated by
UNION CARBIDE CORPORATION
for the
U.S. ATOMIC ENERGY COMMISSION

MARTIN MARIETTA ENERGY SYSTEMS LIBRARIES

3 4456 0286736 0

CONTENTS

Page

Abstract 1

I. Introduction 1

II. General Theory 4

A. Differential Equation for the Vector Potential 4

B. Superposition of Vector Potentials 4

C. Calculation of Various Electromagnetic Phenomena 5

1. Induced Voltage 6

2. Mutual Inductance 7

3. Self Inductance 8

4. Coil Impedance 8

5. Defects 9

6. Induced Eddy Currents 12

7. Dissipated Power 13

8. Electromagnetic Forces 13

9. Fourier Analyses of Nonsinusoidal Driving Currents . . 15

III. Some Important Special Cases 18

A. Coil above a Two-Conductor Plane 18

1. General Derivation 18

2. Impedance of a Coil above a Two-Conductor Plane . . . 27

3. Inductance of a Coil in Air 29

4. Defects in the Cladding Material 29

5. Defects in the Base Material 30

6. Eddy-Current Force 31

B. Reflection Coil above a Two-Conductor Plane 33

1. Voltage and Phase of a Reflection-Type Coil 33

2. Lift-Off Compensation in the Phase-Sensitive Eddy-Current Instrument 36

3. Defects in the Cladding Material 37

4. Defects in the Base Material 38

C. Through Transmission 39

1. Voltage and Phase of a Through-Transmission Coil . . . 39

2. Defects in a Plate 40

Page

D. Coil between Two Conducting Plates 41
1. General Derivation 41
2. Impedance of a Coil between Two Conducting Plates . . 46
E. Coil Encircling a Two-Conductor Rod 47
1. General Derivation 47
2. Impedance of a Coil Encircling a Two-Conductor Rod . . 56
3. Defects in the Outer Material 56
4. Defects in the Inner Material 57
5. Differential Coil System 58
F. Coil inside a Two-Conductor Tube 61
1. General Derivation 61
2. Impedance of a Coil inside a Two-Conductor Tube . . . 67
3. Defects in the Inner Material 67
4. Defects in the Outer Material 68
IV. Calculated Results for Some Important Applications 68
V. Experimental Verification 73
VI. Accuracy of Calculations 78
A. Axial Symmetry 78
B. Current Sheet Approximation 78
C. High Frequency Effects 79
1. The Skin Effect 79
2. Interwinding Capacitance 80
3. Coil-to-Sample Capacitance 81
4. Displacement Current Effect 81
5. Assumption of Linear Media 82
VII. Conclusions 82
VIII. Acknowledgments 82
Appendix 85

SOME EDDY-CURRENT PROBLEMS AND THEIR INTEGRAL SOLUTIONS

C. V. Dodd W. E. Deeds[1]
J. W. Luquire[1] W. G. Spoeri

Abstract

We have obtained integral representations for the vector potential produced by a circular coil for a number of different geometrical configurations. From the vector potential we can calculate any observable electromagnetic induction phenomenon. Our present solutions are limited to cases with axial symmetry and linear media. The solutions are in the form of multiple integrals of ordinary and modified Bessel functions.

The configurations that we have already solved include coils with rectangular cross sections in the following locations: above or on each side of a two-conductor sheet bounded by parallel planes, between two parallel-plane conductors, encircling a tube or a rod consisting of one metal clad on another, and inside a tube. The electromagnetic phenomena that we have calculated include the coil impedance, the phase and amplitude of the voltage induced in pickup coils, the effects of small spheroidal defects on the impedance and phase, and the forces generated in a metal by the eddy currents. The agreement between calculated and measured phenomena is excellent in most cases and within experimental error in all cases.

I. Introduction

One of the most important factors in any eddy-current test and one of the most difficult to analyze is the coil that generates the eddy currents. The electromagnetic field produced by an alternating current flowing in a circular coil in the presence of a conducting material is generally quite complicated. The problem has been analyzed a number of times in the past by use of various physical models. The solutions have

[1]Consultant from the University of Tennessee, Knoxville.

gradually become more accurate and the models more sophisticated as the actual problem is better approached. Today we have very accurate but very complicated solutions, some of which are presented here.

An early series of paper by Förster[2-4] between 1952 and 1954 dealt with both the theory and practical aspects of eddy-current testing. He analyzed a coil above a conducting plane, assuming the coil to be a magnetic dipole, and an infinite coil encircling an infinite rod. Hochschild[5] in 1959 also gave an analysis of an infinite coil and included some eddy-current distributions in the metal. Waidelich and Renken[6] in 1956 analyzed coil impedance by an image approach. Their theoretical results agreed well with experiment for relatively high frequencies. Libby[7] in 1959 presented a theory in which he assumed the coil was a transformer with a network tied to the secondary. This network representation gave good results when compared to experiment. The diffusion of eddy-current pulses (Atwood and Libby,[8] 1963) can be represented in this manner. In 1962, Russell, Schuster, and Waidelich,[9] assuming that the flux was entirely coupled into the conductor, analyzed a cup-core coil. The semiempirical results agreed fairly well with the

---

[2]Friedrich Förster, Z. Metallk. 43, 163–171 (1952).

[3]Friedrich Förster and Kurt Stambke, Z. Metallk. 45(4), 166–179 (1954).

[4]Friedrich Forster, Z. Metallk. 45(4), 197–199 (1954).

[5]R. Hochschild, "Electromagnetic Methods of Testing Metals," Progress in Nondestructive Testing, Vol. 1, Macmillan Company, New York, 1959.

[6]D. L. Waidelich and C. J. Renken, Proc. Natl. Electron Conf. 12, 188–196 (1956).

[7]H. L. Libby, Broadband Electromagnetic Testing Methods, HW-59614 (1959).

[8]K. W. Atwood and H. L. Libby, Diffusion of Eddy Currents, HW-79844 (1963).

[9]T. J. Russell, V. E. Schuster, and D. L. Waidelich, J. Electron. Control 13, 232–237 (1962).

experimental measurements. Vein[10] in 1962, Cheng[11] in 1964, and Burrows[12] in 1964 gave treatments based on delta function coils, and Burrows continued with the development of an eddy-current flaw theory. Dodd and Deeds[13] in 1963 and Dodd[14] in 1965 gave a relaxation theory to calculate the vector potential of a coil with a finite cross section. While the relaxation theory is very versatile and quite accurate for a very fine lattice, it requires a large digital computer and is very expensive to use. Dodd[15] in 1967 and Dodd and Deeds[16] in 1968 developed a set of integral equations that can be evaluated accurately on a small computer. Unfortunately, the derivation of these equations is complicated and must be repeated for various coil and conductor configurations.

This report presents the results for six cases of practical importance with some experimental verification of the calculations. For the computer programs used in evaluating the various formulas, refer to the work by Luquire, Dodd, Deeds, and Spoeri.[17]

---

[10] P. R. Vein, J. Electron. Control 13, 471–494 (1962).

[11] David H.S. Cheng, "The Reflected Impedance of a Circular Coil in the Proximity of a Semi-Infinite Medium," Ph.D. Dissertation, University of Missouri, 1964.

[12] Michael Leonard Burrows, A Theory of Eddy Current Flaw Detection, University Microfilms, Inc., Ann Arbor, Michigan, 1964.

[13] C. V. Dodd and W. E. Deeds, "Eddy Current Impedance Calculated by a Relaxation Method," pp. 300–314 in Proceedings of the Symposium on Physics and Nondestructive Testing, Southwest Research Institute, San Antonio, Texas, 1963.

[14] C. V. Dodd, A Solution to Electromagnetic Induction Problems, ORNL-TM-1185 (1965) and M.S. Thesis, the University of Tennessee, 1965.

[15] C. V. Dodd, Solutions to Electromagnetic Induction Problems, ORNL-TM-1842 (1967) and Ph.D. Dissertation, the University of Tennessee, 1967.

[16] C. V. Dodd and W. E. Deeds, J. Appl. Phys. 39, 2829–2838 (1968).

[17] J. W. Luquire, C. V. Dodd, W. E. Deeds, and W. G. Spoeri, Computer Programs for Some Eddy Current Problems, ORNL-TM-2501 (in preparation).

II. General Theory

For the cases considered here, the vector potential adequately and conveniently represents the electromagnetic field. In this section we shall give the differential equation for the vector potential of a single loop of wire, show how a number of similar vector potentials can be superimposed to obtain the vector potential for coils of rectangular cross section, and then derive equations for various physical phenomena in terms of the vector potential.

A. Differential Equation for the Vector Potential

We shall assume that space is divided into regions of linear, isotropic, and homogeneous media, one of which contains an infinitely thin coil carrying current, I. We shall also assume axial symmetry and a sinusoidal current in the coil, which is located at (r_0, z_0) in cylindrical coordinates.

The differential equation for the spatial part of the vector potential, A, is[15]

$$\frac{\partial^2 A}{\partial r^2} + \frac{1}{r}\frac{\partial A}{\partial r} + \frac{\partial^2 A}{\partial z^2} - \frac{A}{r^2} + \omega^2\mu\epsilon A - j\omega\mu\sigma A + \mu I\delta(r-r_0)\delta(z-z_0) = 0 \ . \qquad (2.1)$$

The solution of this differential equation is a boundary value problem, and it will be effected for various geometrical configurations in later sections. Once this linear differential equation for a particular conductor configuration has been solved, any number of delta function coils can then be superimposed to build up any desired shape of coil.

B. Superposition of Vector Potentials

We can write for the total vector potential produced at (r,z) by the superposition of n coaxial delta function coils located at r_i and z_i

$$A(r,z)_{total} = \sum_{i=1}^{n} A(r,z,r_i,z_i) \ . \qquad (2.2)$$

This equation is valid for coils of any cross section. If we let the current, I, in the delta function coils approach a continuous current distribution of density $i_0(r,z)$, then the vector potential due to this current will also approach a continuous distribution. Denoting the density of this vector potential distribution by $A_0(r,z,r_0,z_0)$, we can write the integral form of Eq. (2.2):

$$A(r,z)_{total} = \iint_{\substack{\text{coil} \\ \text{cross section}}} A_0(r,z,r_0,z_0)dr_0dz_0 \ . \tag{2.3}$$

Since $A_0(r,z,r_0,z_0)$ is proportional to $i_0(r,z)$, it will prove useful for cases in which the current in each loop has the same magnitude and phase to express Eq. (2.3) in terms of the current density. In such a case,

$$i_0(r,z) = \frac{nI}{(\text{coil area})} = \text{constant} \ , \tag{2.4}$$

where I is now the current in each loop of wire.

Multiplying the integrand of Eq. (2.3) by $i_0(r,z)/i_0(r,z)$ and making use of Eq. (2.4) yields

$$A(r,z)_{total} = \frac{nI}{(\ell_2-\ell_1)(r_2-r_1)} \int_{\ell_1}^{\ell_2}\int_{r_1}^{r_2} \frac{A_0(r,z,r_0,z_0)}{i_0} dr_0dz_0 \ , \tag{2.5}$$

where we have assumed the coil to have a rectangular cross section, as shown in Fig. 1. Once the vector potential has been calculated for a particular coil and conductor configuration, the total vector potential produced by a coil with rectangular cross section may be obtained simply by allowing the delta function current to approach the current density, $i_0(r,z)$, and making use of Eq. (2.5).

C. Calculation of Various Electromagnetic Phenomena

Once the vector potential has been determined, any electromagnetic induction phenomenon can be calculated from it. In this section we

ORNL-DWG 68-10309

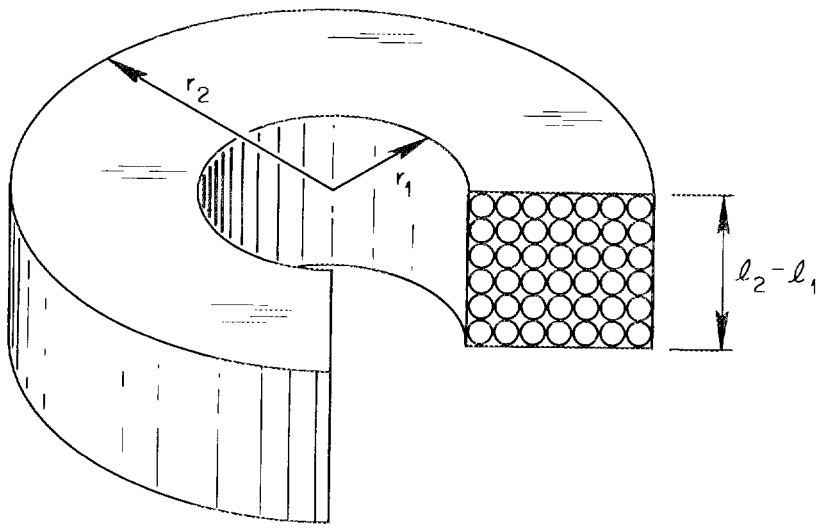

Fig. 1. A Rectangular Cross-Section Coil.

shall give the equations for the phenomena that are of particular interest to the nondestructive tester.

1. Induced Voltage

We have, for the voltage induced in a length of wire,

$$V = j\omega\int\vec{A}\cdot d\vec{s} \ . \tag{2.6}$$

For an axially symmetric coil with a single loop of radius r, Eq. (2.5) becomes

$$V = j\omega 2\pi r A(r,z) \ . \tag{2.7}$$

The total voltage induced in a coil of n turns is then

$$V = j2\pi\omega \sum_{i=1}^{n} r_i A(r_i, z_i) \ . \tag{2.8}$$

We can approximate the above summation by an integral over a turn density of N turns per unit cross-sectional area:

$$V \approx j2\pi\omega \int\int_{\substack{\text{coil}\\ \text{cross section}}} rA(r,z)\ N dr dz\ . \tag{2.9}$$

For coils with a constant number of turns per unit cross-sectional area

$$V = \frac{j2\pi\omega n}{\text{coil cross section}} \int\int_{\substack{\text{coil}\\ \text{cross section}}} rA(r,z)\ dr dz\ . \tag{2.10}$$

If we specify a rectangular cross-section coil of length $(\ell_2'-\ell_1')$ and of inner and outer radii r_1' and r_2', respectively, we can write

$$V = \frac{j2\pi\omega n'}{(\ell_2'-\ell_1')(r_2'-r_1')} \int_{\ell_1'}^{\ell_2'}\int_{r_1'}^{r_2'} rA(r,z) dr dz\ . \tag{2.11}$$

By inserting the vector potential from Eq. (2.5) into Eq. (2.11), we obtain the voltage induced in a coil (with primed parameters) by a current, I, flowing in a coaxial coil:

$$V = \frac{j2\pi\omega n n' I}{(\ell_2-\ell_1)(\ell_2'-\ell_1')(r_2-r_1)(r_2'-r_1')} \int_{\ell_1'}^{\ell_2'}\int_{r_1'}^{r_2'}\int_{\ell_1}^{\ell_2}\int_{r_1}^{r_2} \frac{rA_0(r,z,r_0,z_0)}{i_0}\, dr_0 dz_0 dr dz\ . \tag{2.12}$$

For the special case of the self-induced voltage, we have

$$V = \frac{j2\pi\omega n^2 I}{(\ell_2-\ell_1)^2(r_2-r_1)^2} \int_{\ell_1}^{\ell_2}\int_{r_1}^{r_2}\int_{\ell_1}^{\ell_2}\int_{r_1}^{r_2} \frac{rA_0(r,z,r_0,z_0)}{i_0}\, dr_0 dz_0 dr dz\ . \tag{2.13}$$

2. <u>Mutual Inductance</u>

The voltage generated in a "pickup" coil with dimensions r_2', r_1', ℓ_2', ℓ_1' by a current, I, flowing in a "driver" coil with dimensions r_2, r_1, ℓ_2, ℓ_1 is

$$V = M\frac{dI}{dt} = j\omega MI \ ,$$

or

$$M = \frac{V}{j\omega I} \ . \tag{2.14}$$

Using Eq. (2.12) to calculate the voltage we have

$$M = \frac{2\pi nn'}{(\ell_2-\ell_1)(\ell_2'-\ell_1')(r_2-r_1)(r_2'-r_1')} \int_{\ell_1'}^{\ell_2'}\int_{r_1'}^{r_2'}\int_{\ell_1}^{\ell_2}\int_{r_1}^{r_2} \frac{rA_0(r,z,r_0,z_0)}{i_0}\, dr_0 dz_0 drdz \ . \tag{2.15}$$

This is the mutual inductance between the driver coil and the pickup coil. By the reciprocity theorem, this is equal to the mutual inductance between the pickup coil and the driver coil.

3. Self Inductance

The coil's self inductance is a special case of the mutual inductance. We shall let the two coils become one and the same and drop the primes in Eq. (2.15), obtaining

$$L = \frac{2\pi n^2}{(\ell_2-\ell_1)^2(r_2-r_1)^2} \int_{\ell_1}^{\ell_2}\int_{r_1}^{r_2}\int_{\ell_1}^{\ell_2}\int_{r_1}^{r_2} \frac{rA_0(r,z,r_0,z_0)}{i_0}\, dr_0 dz_0 drdz \ . \tag{2.16}$$

4. Coil Impedance

From the self-induced voltage, we can calculate the coil impedance:

$$V = ZI$$

or

$$Z = \frac{V}{I} \ . \tag{2.17}$$

Substituting from Eq. (2.11) for the self-induced voltage gives

$$Z = \frac{j2\pi\omega n}{(\ell_2-\ell_1)(r_2-r_1)I} \int_{\ell_1}^{\ell_2}\int_{r_1}^{r_2} rA(r,z)drdz \ . \tag{2.18}$$

The coil impedance in the presence of a conductor is usually normalized by dividing it by the magnitude of the coil impedance in air.

$$Z_n = \frac{Z_{conductor}}{|Z_{air}|}$$

or

$$Z_n = \frac{j\int_{\ell_1}^{\ell_2}\int_{r_1}^{r_2} rA(r,z)_{conductor}drdz}{\int_{\ell_1}^{\ell_2}\int_{r_1}^{r_2} rA(r,z)_{air}drdz} \ . \tag{2.19}$$

5. Defects

Once we know the vector potential in a metal, we can determine the effect of a defect. According to Burrows,[18] we can represent a small defect by the sum of a "current defect" and a "magnetic defect." The current defect is caused by an abrupt change in the metal's conductivity, and the magnetic defect is the result of an abrupt change in its magnetic permeability. The latter is of importance only in ferromagnetic materials. The defects must be small enough for the incident field to be essentially uniform over the defect, and the defect dimensions must be small compared with the distance from the defect to the nearest material boundary.

We can modify Burrow's Eq. (5.12) to obtain the defect-induced voltage in terms of the vector potential:

---

[18]Michael Leonard Burrows, A Theory of Eddy Current Flaw Detection, University Microfilms, Inc., Ann Arbor, Michigan, 1964.

$$V_{2d} = \frac{3}{2}\,\mathrm{Vol}\left\{\sigma\omega^2\left(\frac{\vec{A}_2}{I_2}\right)\cdot\vec{\vec{\alpha}}\cdot\left(\frac{\vec{A}_1}{I_1}\right) - j\,\frac{\omega}{\mu}\left(\frac{\nabla\times\vec{A}_2}{I_2}\right)\cdot\vec{\vec{\beta}}\cdot\left(\frac{\nabla\times\vec{A}_1}{I_1}\right)\right\} I_1 \ . \tag{2.20}$$

This is the defect-produced voltage, V_{2d}, induced in coil 2 by a current I_1 flowing in coil 1. Here, $\vec{A}_1$ is the vector potential at the defect produced by a current I_1 flowing in coil 1, and $\vec{A}_2$ is the vector potential that would be produced at the defect if a current I_2 were applied to coil 2; $\vec{\vec{\alpha}}$ and $\vec{\vec{\beta}}$ are the current and magnetic scattering matrices, respectively. For two axially symmetric coils the voltage due to any shape current defect and a spherical magnetic defect is

$$V_{2d} = \frac{3}{2}\,\mathrm{Vol}\left\{\sigma\omega^2\left(\frac{A_2}{I_2}\right)\left(\frac{A_1}{I_1}\right)\alpha_{22} - j\,\frac{\omega}{\mu I_1 I_2}\left[\beta_{11}\,\frac{\partial A_1}{\partial z}\,\frac{\partial A_2}{\partial z} + \frac{\beta_{33}}{r^2}\left(\frac{\partial rA_1}{\partial r}\right)\left(\frac{\partial rA_2}{\partial r}\right)\right]\right\} I_1 \ . \tag{2.21}$$

We shall first consider current defects.

If we take the special case of a spheroidal defect, as shown in Fig. 2, we can write for the current shape and orientation factor

$$\alpha_{22} = \alpha_L \cos^2\phi + \alpha_T \sin^2\phi \ , \tag{2.22}$$

where

$$\alpha_L = \frac{2}{3}\,[1-\sigma_d/\sigma]\{1-[1-\sigma_d/\sigma][\xi^2-1][\,\frac{\xi}{2}\,\ln\left(\frac{\xi+1}{\xi-1}\right) - 1]\}^{-1} \tag{2.23}$$

for $b/a < 1$

$$\alpha_L = \frac{2}{3}\,[1-\sigma_d/\sigma]\{1-[1-\sigma_d/\sigma][\xi^2+1][1-\xi\,\tan^{-1}(1/\xi)]\}^{-1} \tag{2.24}$$

for $b/a > 1$

$$\alpha_T = \frac{4}{3}\,[1-\sigma_d/\sigma]\{2-[1-\sigma_d/\sigma]\xi[\xi-\frac{1}{2}\,(\xi^2-1)\ln\left(\frac{\xi+1}{\xi-1}\right)]\}^{-1} \tag{2.25}$$

for $b/a < 1$

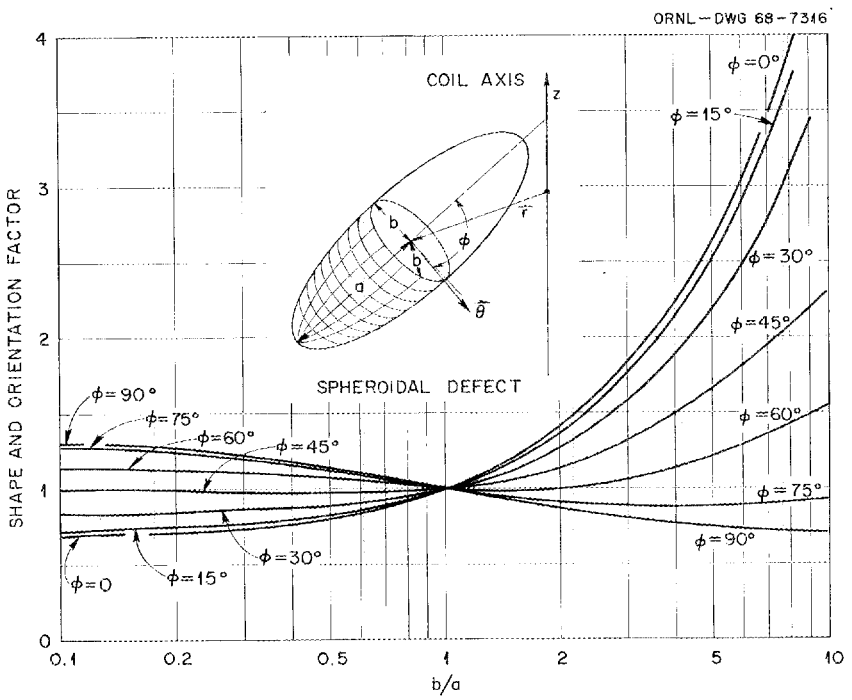

Fig. 2. The Shape and Orientation Factor of a Spheroidal Defect.

$$\alpha_T = \frac{4}{3}\,[1-\sigma_d/\sigma]\{2+[1-\sigma_d/\sigma][\xi^2-\xi(1+\xi^2)\,\tan^{-1}(1/\xi)]\}^{-1} \qquad (2.26)$$

for $b/a > 1$

and

$\xi = |1-(b/a)^2|^{-1/2}$ = asymmetry parameter,

a = symmetry semiaxis,

b = semiaxis perpendicular to symmetry axis,

σ = conductivity of metal,

σ_d = conductivity of defect.

Figure 2 shows a plot of the current shape and orientation factor when the defect conductivity is taken to be zero. The orientation angle, ϕ, is the angle between the theta (θ) axis and the symmetry axis of the spheroid. If we let the ratio of b/a approach infinity, the spheroid becomes a flat disk. Its volume ($4\pi b^2 a/3$) approaches zero, and the shape and orientation factor becomes infinite in such a way that the product approaches

$$\text{Vol}\ \alpha_{22} = \frac{16\ b^3}{9} \cos^2\phi\ , \tag{2.27}$$

where b is the radius of the disk.

It is worth noting that we can divide the current defect equation into two independent factors:

$$\frac{V_{2d}}{I_1} = \left[\frac{3}{2}\ \sigma\omega^2 \left(\frac{A_2}{I_2}\right)\left(\frac{A_1}{I_1}\right)\right] \times \left[\text{Vol}\ \alpha_{22}\right] . \tag{2.28}$$

The factor in the first square brackets depends only on the problem parameters, such as coil size and shape, frequency, and conductivity. It has both real and imaginary parts and is called the "defect sensitivity factor." The factor in the second square brackets depends only on the size, shape, and orientation of the defect. If we allow the two coils to become one and the same, Eq. (2.28) represents the impedance change due to a current defect.

For a spherical magnetic defect, we have

$$\beta_{11} = \beta_{33} = 2\left(\frac{\mu-\mu_d}{2\mu+\mu_d}\right) , \tag{2.29}$$

where μ and μ_d are the permeabilities of the metal and of the defect, respectively. From Eq. (2.21) we have for spherical magnetic defects

$$\frac{V_{2d}}{I_1} = \left[-\frac{3}{2}\ j\ \frac{\omega}{\mu I_1 I_2}\left(\frac{\partial A_1}{\partial z}\frac{\partial A_2}{\partial z} + \frac{1}{r^2}\frac{\partial rA_1}{\partial r}\frac{\partial rA_2}{\partial r}\right)\right] \times \left[2\ \text{Vol.}\left(\frac{\mu-\mu_d}{2\mu+\mu_d}\right)\right] . \tag{2.30}$$

Thus we can calculate the effects of a defect from the vector potential produced there.

6. Induced Eddy Currents

We have, from Ohm's law

$$\vec{J} = \sigma\vec{E} = -\sigma\frac{\partial\vec{A}}{\partial t} = -j\omega\sigma\vec{A} . \tag{2.31}$$

Due to axial symmetry, Eq. (2.31) becomes

$$J = -j\omega\sigma A(r,z) . \tag{2.32}$$

7. Dissipated Power

From the vector potential, the dissipated power density due to the eddy currents can be calculated:

$$P = JE = \sigma E^2 = -\omega^2 \sigma A^2 \ , \tag{2.33}$$

where A is the root-mean-square vector potential. The negative sign denotes a power loss from the field.

8. Electromagnetic Forces

We can also calculate the electromagnetic forces in any conductor that may be present. The force density is given by Stratton[19] as

$$\vec{F} = \rho\vec{E} + \vec{J} \times \vec{B} - \frac{1}{2} E^2 \nabla\epsilon - \frac{1}{2} H^2 \nabla\mu + \frac{K_m K_e - 1}{c^2} \frac{\partial \vec{S}}{\partial t} \ . \tag{2.34}$$

This is the force exerted by an electromagnetic field on a unit volume of isotropic matter, neglecting electro- and magnetostrictive forces. These latter forces can justifiably be neglected, since they produce deformation of the material but no net force. The first term vanishes when the charge density, ρ, is summed over the electrons and ions. The third term is also taken to be zero for the interior of a metal. The last term is due to the light pressure and is negligibly small. Thus, the force density reduces to

$$\vec{F} = \vec{J} \times \vec{B} - \frac{1}{2} H^2 \nabla\mu$$

or

$$\vec{F} = \vec{J} \times \vec{B} - \frac{1}{2} B^2 \nabla\frac{1}{\mu} \ . \tag{2.35}$$

We shall first consider only nonmagnetic materials, which require only the first term in Eq. (2.35). Substituting for the current from Eq. (2.31) gives

$$\vec{F} = -\sigma \frac{\partial \vec{A}}{\partial t} \times (\nabla \times \vec{A}) \ . \tag{2.36}$$

---

[19] J. A. Stratton, Electromagnetic Theory, McGraw-Hill Book Company, New York, 1941.

Expanding the curl of $\vec{A}$ in cylindrical coordinates,

$$\nabla \times \vec{A} = \hat{e}_r\left(-\frac{\partial A}{\partial z}\right) + \hat{e}_z \frac{1}{r}\frac{\partial rA}{\partial r} , \tag{2.37}$$

yields

$$\vec{F} = -\sigma\hat{e}_\theta \frac{\partial A}{\partial t} \times \left[\hat{e}_r\left(-\frac{\partial A}{\partial z}\right) + \hat{e}_z \frac{1}{r}\frac{\partial rA}{\partial r}\right] . \tag{2.38}$$

By performing the vector operations, we find that

$$\vec{F} = -\hat{e}_z \sigma \frac{\partial A}{\partial t}\frac{\partial A}{\partial z} - \hat{e}_r \sigma \frac{\partial A}{\partial t}\frac{1}{r}\frac{\partial rA}{\partial r} . \tag{2.39}$$

If the vector potential consists of the sum of a time-harmonic part and a steady-state part,

$$A = A_\omega + A_0 , \tag{2.40}$$

Eq. (2.39) becomes

$$\vec{F} = -\hat{e}_z \sigma \frac{\partial A_\omega}{\partial t}\frac{\partial}{\partial z}(A_\omega + A_0) - \hat{e}_r \sigma \frac{\partial A_\omega}{\partial t}\frac{1}{r}\frac{\partial r(A_\omega + A_0)}{\partial r} . \tag{2.41}$$

We shall now consider only the z component of the force density, although the treatment of the r component is similar. The time-harmonic vector potential, A_ω, and its derivative with respect to z vary with respect to time according to

$$A_\omega = |A_\omega| \cos(\omega t + \phi) \tag{2.42}$$

$$\frac{\partial A_\omega}{\partial z} = \left|\frac{\partial A_\omega}{\partial z}\right| \cos(\omega t + \phi') . \tag{2.43}$$

Thus we have

$$F_z = +\omega\sigma|A_\omega|\sin(\omega t + \phi)\left\{\left|\frac{\partial A_\omega}{\partial z}\right| \cos(\omega t + \phi) + \frac{\partial A_0}{\partial z}\right\} . \tag{2.44}$$

Expanding in terms of the real and imaginary parts of A_ω and $\frac{\partial A_\omega}{\partial z}$ gives

$$F_z = \frac{\omega\sigma}{2}\left\{\left[\mathrm{Rl}\,\frac{\partial A_\omega}{\partial z}\,\mathrm{Im}A_\omega + \mathrm{Im}\,\frac{\partial A_\omega}{\partial z}\,\mathrm{Rl}A_\omega\right]\cos 2\omega t\right.$$

$$+\left[\mathrm{Rl}\,\frac{\partial A_\omega}{\partial z}\,\mathrm{Rl}A_\omega - \mathrm{Im}\,\frac{\partial A_\omega}{\partial z}\,\mathrm{Im}A_\omega\right]\sin 2\omega t$$

$$+\,2\left[\mathrm{Im}A_\omega\cos\omega t + \mathrm{Rl}A_\omega\sin\omega t\right]\frac{\partial A_0}{\partial z}$$

$$\left.+\,\mathrm{Im}A_\omega\,\mathrm{Rl}\,\frac{\partial A_\omega}{\partial z} - \mathrm{Rl}A_\omega\,\mathrm{Im}\,\frac{\partial A_\omega}{\partial z}\right\}. \tag{2.45}$$

This is the z component of the force density. To get the total force on the metal, we must integrate Eq. (2.45) over the metal. The last two terms are the only ones that give a net force on the metal when the force is averaged over one cycle. Due to the cylindrical symmetry, there will be no net r component of force.

Let us now consider magnetic materials. The first term in Eq. (2.35) gives the Lorentz force density, which we have already calculated; the second term is due to magnetic materials:

$$\vec{F} = -\frac{1}{2}B^2\nabla\frac{1}{\mu}\ . \tag{2.46}$$

Substituting the curl of $\vec{A}$ for $\vec{B}$ and expanding, we obtain

$$F_z = -\frac{1}{2}\left\{\left(\frac{\partial A}{\partial z}\right)^2 + \left(\frac{1}{r}\frac{\partial rA}{\partial r}\right)^2\right\}\frac{\partial(1/\mu)}{\partial z}\ , \tag{2.47}$$

$$F_r = -\frac{1}{2}\left\{\left(\frac{\partial A}{\partial z}\right)^2 + \left(\frac{1}{r}\frac{\partial rA}{\partial r}\right)^2\right\}\frac{\partial(1/\mu)}{\partial r}\ . \tag{2.48}$$

This force density must be integrated over the entire metal to obtain the total force. However, the derivative with respect to $1/\mu$ is usually taken to be zero except on the boundaries. Again, due to symmetry there is no net r component of force. The total force is the sum of the eddy-current forces and the magnetic forces.

9. Fourier Analyses of Nonsinusoidal Driving Currents

We have assumed that the applied current was sinusoidal, while in most practical cases it is not. The current waveform in practice may

range from a pure sinusoid plus a small amount of harmonic distortion to pulses. However, we can represent any current as a Fourier series of pure sinusoidal currents:

$$I(t) = \frac{a_0}{2} + \sum_{m=1}^{\infty}(a_m \cos m\omega_1 t + b_m \sin m\omega_1 t) \ , \tag{2.49}$$

where

$$a_m = \frac{\omega_1}{\pi} \int_{-T/2}^{T/2} I(t) \cos m\omega_1 t dt \qquad (m = 0,1,2, \ldots)$$

$$b_m = \frac{\omega_1}{\pi} \int_{-T/2}^{T/2} I(t) \sin m\omega_1 t dt \qquad (m = 1,2,3, \ldots) \tag{2.50}$$

$\omega_1 = \frac{2\pi}{T}$, and

T = the period of repetition.

For the coil voltage produced by the Fourier components of the current we have

$$V = \sum_m V_{\omega_m} = \sum_m Z_m \, e^{j\phi_m} \, I \, e^{jm\omega t} \ , \tag{2.51}$$

or

$$V = \frac{a_0}{2} Z_o + \sum_{m=1}^{\infty} Z_m \, [a_m \cos(m\omega_1 t + \phi_m) + b_m \sin(m\omega_1 t + \phi_m)] \ , \tag{2.52}$$

where Z_m and ϕ_m represent the magnitude and phase of the impedance at the frequency $m\omega_1$. This impedance can be read directly from curves of the impedance, which has been normalized by dividing by ωL_0. The voltage produced by the pulse is

$$V = \frac{a_0 Z_0}{2} + \omega_1 L_0 \sum_{m=1}^{\infty} m Z_{n_m} [a_m \cos(m\omega_1 t + \phi_m) + b_m \sin(m\omega_1 t + \phi_m)] \ . \tag{2.53}$$

For an example we shall take a square wave pulse to be the applied current, as shown in Fig. 3(a). The current can be written as

ORNL-DWG 68-10311

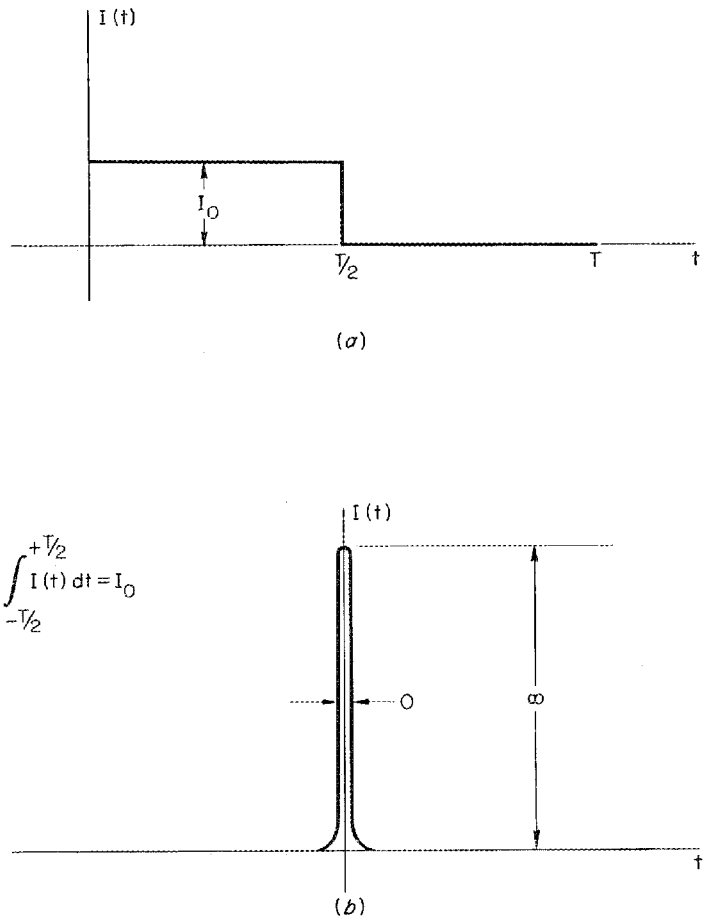

Fig. 3. Current Waveforms. (a) A square wave current pulse. (b) A delta function current pulse.

$$I(t) = I_0 \left[\frac{1}{2} + \frac{2}{\pi}\left(\sin\omega_1 t + \frac{1}{3}\sin 3\omega_1 t + \frac{1}{5}\sin 5\omega_1 t + \ldots\right)\right], \tag{2.54}$$

and thus the voltage in terms of the normalized impedance becomes

$$V = I_0\left[\frac{Z_0}{2} + \frac{2\omega_1 L_0}{\pi}\left(Z_{n_1}\sin(\omega_1 t + \phi_1) + Z_{n_3}\sin(3\omega_1 t + \phi_3) + \ldots\right)\right]. \tag{2.55}$$

For a second example we shall assume a unit impulse of current as shown in Fig. 3(b). For the current we have

$$I = \frac{\omega_1 I_0}{2\pi} + \frac{\omega_1 I_0}{\pi} \sum_{m=1}^{\infty} \cos(m\omega_1 t) \ , \tag{2.56}$$

and thus the voltage in terms of the normalized impedance is

$$V = \frac{\omega_1 I_0 Z_0}{2\pi} + \frac{\omega_1^2 I_0 L_0}{\pi} \sum_{m=1}^{\infty} m Z_{n_m} \cos(m\omega_1 t + \phi_m) \ . \tag{2.57}$$

Now, as the frequency approaches infinity, the voltages for both the step function and the unit impulse function would theoretically become infinitely large. For actual physical test cases, however, the series in both Eqs. (2.55) and (2.57) are terminated due to the limited bandwidth of the system's amplifiers. They can neither generate the infinite frequencies required to produce the driving currents nor amplify the infinite frequencies of the voltages which would be produced.

III. Some Important Special Cases

We have seen how various electromagnetic phenomena can be calculated from the vector potential. In this section we shall present the vector potential for some special cases and use it to calculate some of the quantities of practical interest.

A. Coil above a Two-Conductor Plane

1. General Derivation

The coil above a two-conductor plane is shown in Fig. 4. The space is divided into four regions, in each of which the properties are homogeneous. The differential equation in each region is a special case of Eq. (2.1).

In air (regions I and II) we have

$$\frac{\partial^2 A}{\partial r^2} + \frac{1}{r}\frac{\partial A}{\partial r} + \frac{\partial^2 A}{\partial z^2} - \frac{A}{r^2} + \omega^2 \mu \epsilon A = 0 \ . \tag{3.1}$$

The differential equation in a conductor (regions III and IV) is

$$\frac{\partial^2 A}{\partial r^2} + \frac{1}{r}\frac{\partial A}{\partial r} + \frac{\partial^2 A}{\partial z^2} - \frac{A}{r^2} + \omega^2 \mu_i \epsilon_i A - j\omega \mu_i \sigma_i A = 0. \tag{3.2}$$

ORNL-DWG 67-2522

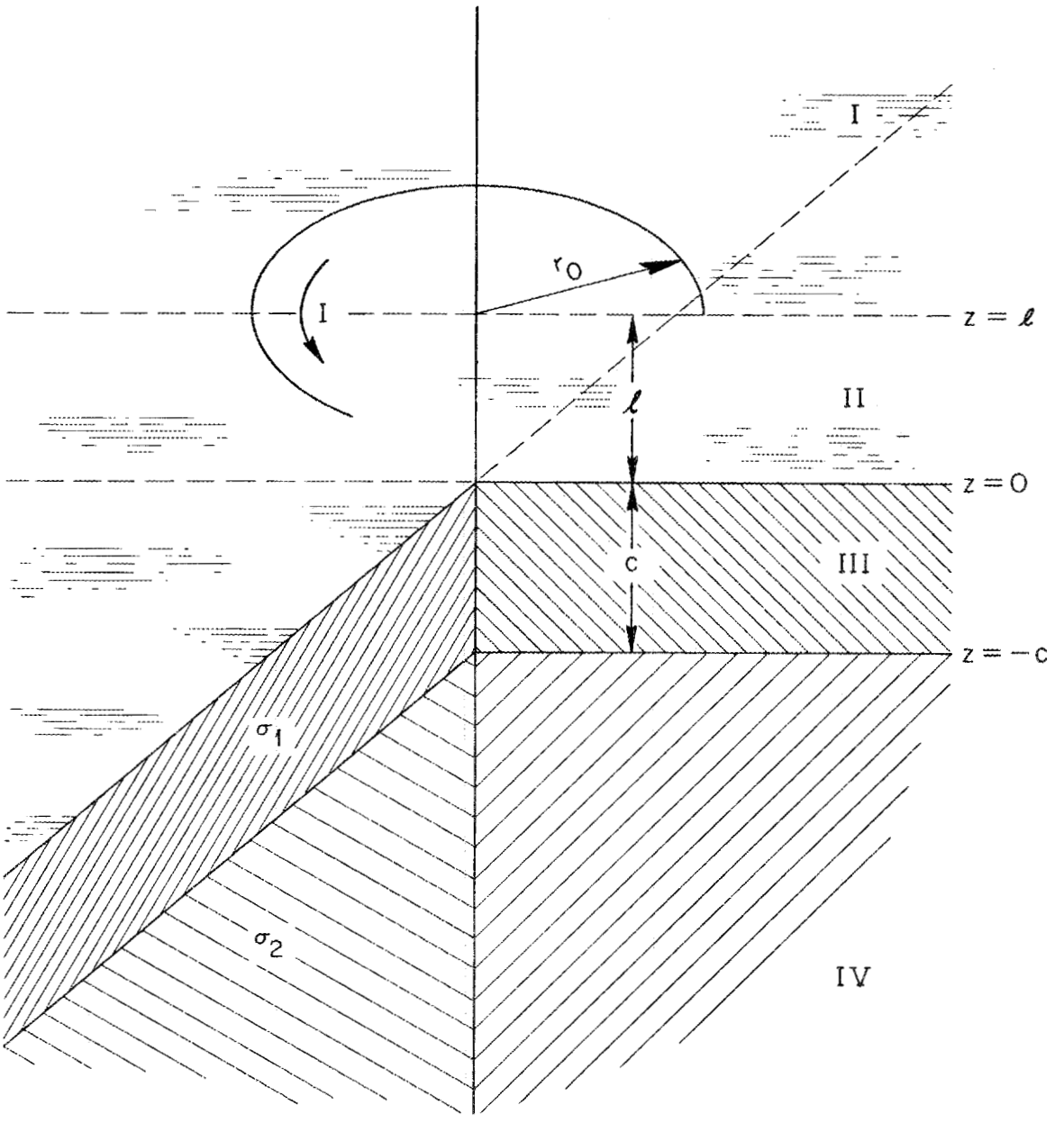

Fig. 4. A Delta Function Coil above a Two-Conductor Plane.

Setting $A(r,z) = R(r)\ Z(z)$ and dividing by $R(r)\ Z(z)$ gives

$$\frac{1}{R(r)}\frac{\partial^2 R(r)}{\partial r^2} + \frac{1}{rR(r)}\frac{\partial R(r)}{\partial r} + \frac{1}{Z(z)}\frac{\partial^2 Z(z)}{\partial z^2} - \frac{1}{r^2} + \omega^2\mu_i\epsilon_i - j\omega\mu_i\sigma_i = 0 \ . \quad (3.3)$$

We shall now choose a separation "constant," α^2. The positive sign makes the equations easier to evaluate for boundaries running in the

r direction. We write for the z dependence

$$\frac{1}{Z(z)}\frac{\partial^2 Z(z)}{\partial z^2} = \text{"constant"} = \alpha^2 - \omega^2\mu_i\epsilon_i + j\omega\mu_i\sigma_i \tag{3.4}$$

or

$$Z(z) = A\, e^{+\sqrt{\alpha^2-\omega^2\mu_i\epsilon_i+j\omega\mu_i\sigma_i}\; z} + B\, e^{-\sqrt{\alpha^2-\omega^2\mu_i\epsilon_i+j\omega\mu_i\sigma_i}\; z} \; . \tag{3.5}$$

We define

$$\alpha_i \equiv \sqrt{\alpha^2-\omega^2\mu_i\epsilon_i+j\omega\mu_i\sigma_i} \; . \tag{3.6}$$

Equation (3.3) then becomes

$$\frac{1}{R(r)}\frac{\partial^2 R(r)}{\partial r^2} + \frac{1}{rR(r)}\frac{\partial R(r)}{\partial r} + \alpha^2 - \frac{1}{r^2} = 0 \; . \tag{3.7}$$

This is a first-order Bessel equation and has the solution

$$R(r) = C\, J_1(\alpha r) + D\, Y_1(\alpha r) \; . \tag{3.8}$$

Combining the solutions we have

$$A(r,z) = [A\, e^{+\alpha_i z} + B\, e^{-\alpha_i z}][C\, J_1(\alpha r) + D\, Y_1(\alpha r)] \; . \tag{3.9}$$

We now need to determine the constants A, B, C, and D. They are functions of the separation "constant" and are usually different for each value of α. Our complete solution would be a sum of all the individual solutions, if α were a discrete variable; but since α is a continuous variable, the complete solution is an integral over the entire range of α.

Thus, the general solution is

$$A(r,z) = \int_0^\infty [A(\alpha)\, e^{\alpha_i z} + B(\alpha)\, e^{-\alpha_i z}][C(\alpha)\, J_1(\alpha r) + D(\alpha)\, Y_1(\alpha r)]\, d\alpha \; . \tag{3.10}$$

We must take $A(\alpha) = 0$ in region I, where z goes to plus infinity. Due to the divergence of Y_1 at the origin, $D(\alpha) = 0$ in all regions. In region IV, where z goes to minus infinity, $B(\alpha)$ must vanish. The solutions in each region then become

$$A^{(1)}(r,z) = \int_0^\infty B_1(\alpha) e^{-\alpha_0 z} J_1(\alpha r)\, d\alpha \tag{3.11}$$

$$A^{(2)}(r,z) = \int_0^\infty [C_2(\alpha)\, e^{\alpha_0 z} + B_2(\alpha)\, e^{-\alpha_0 z}]\, J_1(\alpha r)\, d\alpha \tag{3.12}$$

$$A^{(3)}(r,z) = \int_0^\infty [C_3(\alpha)\, e^{\alpha_1 z} + B_3(\alpha)\, e^{-\alpha_1 z}]\, J_1(\alpha r)\, d\alpha \tag{3.13}$$

$$A^{(4)}(r,z) = \int_0^\infty C_4(\alpha)\, e^{\alpha_2 z}\, J_1(\alpha r)\, d\alpha\ . \tag{3.14}$$

The boundary conditions between the different regions are

$$A^{(1)}(r,\ell) = A^{(2)}(r,\ell) \tag{3.15}$$

$$\left.\frac{\partial A^{(1)}}{\partial z}(r,z)\right]_{z=\ell} = \left.\frac{\partial A^{(2)}}{\partial z}(r,z)\right]_{z=\ell} - \mu I\, \delta(r - r_0) \tag{3.16}$$

$$A^{(2)}(r,o) = A^{(3)}(r,o) \tag{3.17}$$

$$\left.\frac{1}{\mu_0}\frac{\partial A^{(2)}}{\partial z}(r,z)\right]_{z=0} = \left.\frac{\partial A^{(3)}}{\mu_1 \partial z}(r,z)\right]_{z=0} \tag{3.18}$$

$$A^{(3)}(r,-c) = A^{(4)}(r,-c) \tag{3.19}$$

$$\left.\frac{1}{\mu_1}\frac{\partial A^{(3)}}{\partial z}(r,z)\right]_{z=-c} = \left.\frac{1 \partial A^{(4)}}{\mu_2 \partial z}(r,z)\right]_{z=-c} \tag{3.20}$$

Equation (3.15) gives

$$\int_0^\infty B_1(\alpha)\ e^{-\alpha_0 \ell}\ J_1(\alpha r)\ d\alpha = \int_0^\infty [C_2(\alpha)\ e^{\alpha_0 \ell} + B_2(\alpha)\ e^{-\alpha_0 \ell}]\ J_1(\alpha r)\ d\alpha\ . \quad (3.21)$$

If we multiply both sides of Eq. (3.21) by $\int_0^\infty J_1(\alpha' r) r\ dr$ and then reverse the order of integration, we obtain

$$\int_0^\infty \frac{B_1(\alpha)\ e^{-\alpha_0 \ell}}{\alpha} [\int_0^\infty J_1(\alpha r)\ J_1(\alpha' r)\ \alpha r\ dr]\ d\alpha = \int_0^\infty \frac{1}{\alpha} [C_2(\alpha)\ e^{\alpha_0 \ell}$$

$$+ B_2(\alpha)\ e^{-\alpha_0 \ell}][\int_0^\infty J_1(\alpha r)\ J_1(\alpha' r)\ \alpha r\ dr]\ d\alpha\ . \quad (3.22)$$

We can simplify Eq. (3.22) by use of the Fourier-Bessel equation, which is

$$F(\alpha') = \int_0^\infty F(\alpha) \int_0^\infty J_1(\alpha r)\ J_1(\alpha' r)\ \alpha r\ dr\ d\alpha\ . \quad (3.23)$$

Equation (3.22) then becomes

$$\frac{B_1}{\alpha'}\ e^{-\alpha_0' \ell} = \frac{C_2}{\alpha'}\ e^{\alpha_0' \ell} + \frac{B_2}{\alpha'}\ e^{-\alpha_0' \ell}\ . \quad (3.24)$$

We can evaluate the other integral equations in a similar manner. We shall drop the primes on the α and make the following definition:

$$\beta_i \equiv (\mu_0/\mu_i)\ \alpha_i = (\mu_0/\mu_i)\sqrt{\alpha^2 - \omega^2\mu_i\epsilon_i + j\omega\mu_i\sigma_i}\ . \quad (3.25)$$

Applying the remainder of the boundary conditions gives

$$-\frac{\alpha_0}{\alpha}\ B_1 e^{-\alpha_0 \ell} = \frac{\alpha_0}{\alpha}\ C_2 e^{\alpha_0 \ell} - \frac{\alpha_0}{\alpha}\ B_2 e^{-\alpha_0 \ell} - \mu I r_o J_1(\alpha r_o) \quad (3.26)$$

$$\frac{C_2}{\alpha} + \frac{B_2}{\alpha} = \frac{C_3}{\alpha} + \frac{B_3}{\alpha} \quad (3.27)$$

$$\frac{\alpha_0}{\alpha} C_2 - \frac{\alpha_0}{\alpha} B_2 = \frac{\mu_0\alpha_1}{\mu_1\alpha} C_3 - \frac{\mu_0\alpha_1}{\mu_1\alpha} B_3 = \frac{\beta_1}{\alpha} (C_3 - B_3) \tag{3.28}$$

$$\frac{C_3}{\alpha} e^{-\alpha_1 c} + \frac{B_3}{\alpha} e^{\alpha_1 c} = \frac{C_4}{\alpha} e^{-\alpha_2 c} \tag{3.29}$$

$$\frac{\beta_1}{\alpha} C_3 e^{-\alpha_1 c} - \frac{\beta_1}{\alpha} B_3 e^{\alpha_1 c} = \frac{\beta_2}{\alpha} C_4 e^{-\alpha_2 c} \ . \tag{3.30}$$

We now have six equations with six unknowns. Their solution is

$$B_1 = \frac{1}{2} \mu I r_0 J_1(\alpha r_0) \frac{\alpha}{\alpha_0} \left\{ e^{\alpha_0 \ell} + \left[\frac{(\alpha_0+\beta_1)(\beta_1-\beta_2) + (\alpha_0-\beta_1)(\beta_1+\beta_2)e^{2\alpha_1 c}}{(\alpha_0-\beta_1)(\beta_1-\beta_2) + (\alpha_0+\beta_1)(\beta_1+\beta_2)e^{2\alpha_1 c}} \right] e^{-\alpha_0 \ell} \right\} \tag{3.31}$$

$$C_2 = \frac{1}{2} \mu I r_0 J_1(\alpha r_0) \frac{\alpha}{\alpha_0} e^{-\alpha_0 \ell} \tag{3.32}$$

$$B_2 = \frac{1}{2} \mu I r_0 J_1(\alpha r_0) \frac{\alpha}{\alpha_0} \left\{ \frac{(\alpha_0+\beta_1)(\beta_1-\beta_2) + (\alpha_0-\beta_1)(\beta_1+\beta_2)\ e^{2\alpha_1 c}}{(\alpha_0-\beta_1)(\beta_1-\beta_2) + (\alpha_0+\beta_1)(\beta_1+\beta_2)\ e^{2\alpha_1 c}} \right\} e^{-\alpha_0 \ell} \tag{3.33}$$

$$C_3 = \mu I r_0 J_1(\alpha r_0) \left\{ \frac{\alpha(\beta_1+\beta_2)\ e^{-\alpha_0 \ell + 2\alpha_1 c}}{(\alpha_0-\beta_1)(\beta_1-\beta_2) + (\alpha_0+\beta_1)(\beta_1+\beta_2)\ e^{2\alpha_1 c}} \right\} \tag{3.34}$$

$$B_3 = \mu I r_0 J_1(\alpha r_0) \left\{ \frac{\alpha(\beta_1-\beta_2)\ e^{-\alpha_0 \ell}}{(\alpha_0-\beta_1)(\beta_1-\beta_2) + (\alpha_0+\beta_1)(\beta_1+\beta_2)\ e^{2\alpha_1 c}} \right\} \tag{3.35}$$

$$C_4 = \mu I r_0 J_1(\alpha r_0) \left\{ \frac{2\alpha\beta_1\ e^{(\alpha_2+\alpha_1)c}\ e^{-\alpha_0 \ell}}{(\alpha_0-\beta_1)(\beta_1-\beta_2) + (\alpha_0+\beta_1)(\beta_1+\beta_2)\ e^{2\alpha_1 c}} \right\} \tag{3.36}$$

The expressions for the vector potential in each region thus become

$$A^{(1)}(r,z) = \frac{\mu I r_0}{2}\int_0^\infty J_1(\alpha r_0)J_1(\alpha r)\ e^{-\alpha_0\ell-\alpha_0 z}$$

$$\times\frac{\alpha}{\alpha_0}\left\{e^{2\alpha_0\ell} + \left[\frac{(\alpha_0+\beta_1)(\beta_1-\beta_2) + (\alpha_0-\beta_1)(\beta_1+\beta_2)\ e^{2\alpha_1 c}}{(\alpha_0-\beta_1)(\beta_1-\beta_2) + (\alpha_0+\beta_1)(\beta_1+\beta_2)\ e^{2\alpha_1 c}}\right]\right\} d\alpha \quad (3.37)$$

$$A^{(2)}(r,z) = \frac{\mu I r_0}{2}\int_0^\infty J_1(\alpha r_0)J_1(\alpha r)\ e^{-\alpha_0\ell}$$

$$\times\frac{\alpha}{\alpha_0}\left\{e^{\alpha_0 z} + \left[\frac{(\alpha_0+\beta_1)(\beta_1-\beta_2) + (\alpha_0-\beta_1)(\beta_1+\beta_2)\ e^{2\alpha_1 c}}{(\alpha_0-\beta_1)(\beta_1-\beta_2) + (\alpha_0+\beta_1)(\beta_1+\beta_2)\ e^{2\alpha_1 c}}\right] e^{-\alpha_0 z}\right\} d\alpha \quad (3.38)$$

$$A^{(3)}(r,z) = \mu I r_0\int_0^\infty J_1(\alpha r_0)J_1(\alpha r)\ e^{-\alpha_0\ell}$$

$$\times\alpha\left\{\frac{(\beta_1+\beta_2)\ e^{2\alpha_1 c}\ e^{\alpha_1 z} + (\beta_1-\beta_2)\ e^{-\alpha_1 z}}{(\alpha_0-\beta_1)(\beta_1-\beta_2) + (\alpha_0+\beta_1)(\beta_1+\beta_2)\ e^{2\alpha_1 c}}\right\} d\alpha \quad (3.39)$$

$$A^{(4)} = \mu I r_0\int_0^\infty J_1(\alpha r_0)J_1(\alpha r)\ e^{-\alpha_0\ell}$$

$$\times\left\{\frac{2\alpha\beta_1\ e^{(\alpha_2+\alpha_1)c}\ e^{\alpha_2 z}}{(\alpha_0-\beta_1)(\beta_1-\beta_2) + (\alpha_0+\beta_1)(\beta_1+\beta_2)e^{2\alpha_1 c}}\right\} d\alpha \quad (3.40)$$

These are the equations for the vector potential of a delta function coil above a two-conductor plane. We shall now use Eq. (2.5) to superimpose the delta function coils to form a coil of rectangular cross section as shown in Fig. 5. Substituting Eq. (3.37) into Eq. (2.5) and reversing the order of integration gives

$$A^{(1)}(r,z) = \int_0^\infty\int_{r_1}^{r_2}\int_{\ell_1}^{\ell_2}\frac{\mu I N r_0}{2}\ J_1(\alpha r_0)J_1(\alpha r)\ e^{-\alpha_0\ell-\alpha_0 z}$$

$$\times\frac{\alpha}{\alpha_0}\left\{e^{2\alpha_0\ell} + \left[\frac{(\alpha_0+\beta_1)(\beta_1-\beta_2) + (\alpha_0-\beta_1)(\beta_1+\beta_2)\ e^{2\alpha_1 c}}{(\alpha_0-\beta_1)(\beta_1-\beta_2) + (\alpha_0+\beta_1)(\beta_1+\beta_2)\ e^{2\alpha_1 c}}\right]\right\} d\alpha dr_0 d\ell\ , \quad (3.41)$$

ORNL-DWG 67-2523R

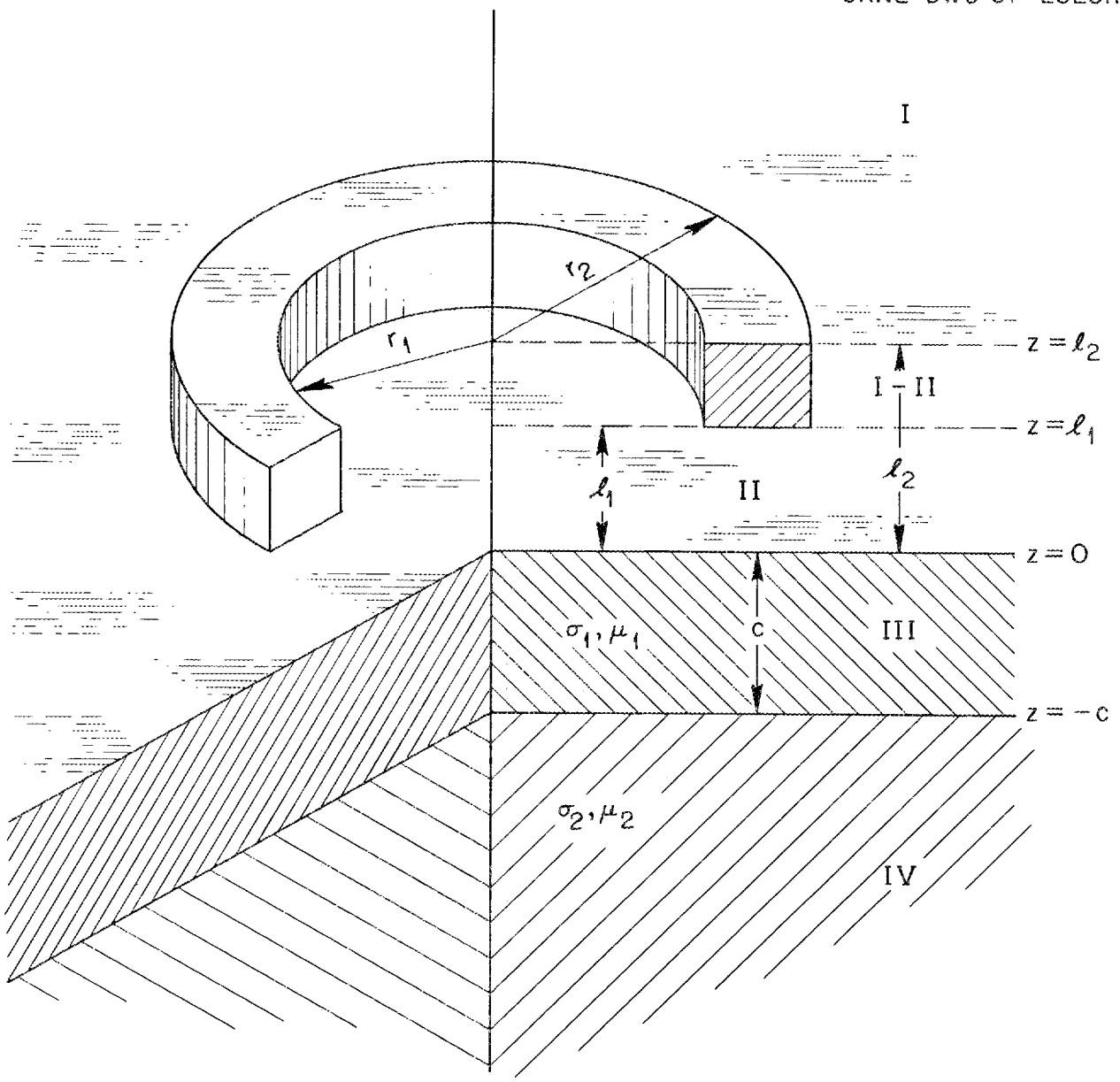

Fig. 5. A Coil of Rectangular Cross Section above a Two-Conductor Plane.

where N is the turn density and I is the current in each turn.

We shall express the integral over r_0 as

$$\int_{r_0=r_1}^{r_2} r_0 J_1(\alpha r_0)\,dr_0 = \frac{1}{\alpha^2}\int_{\alpha r_0=\alpha r_1}^{\alpha r_2} \alpha r_0 J_1(\alpha r_0)\,d\alpha r_0 = \frac{1}{\alpha^2}\int_{x=\alpha r_1}^{\alpha r_2} x J_1(x)\,dx \equiv \frac{1}{\alpha^2}\,J(r_2, r_1)\ . \tag{3.42}$$

The integral over ℓ is

$$\int_{\ell=\ell_1}^{\ell_2} e^{-\alpha_0(\ell+z)}\left\{e^{2\alpha_0\ell} + 1\right\} d\ell = e^{-\alpha_0 z}\int_{\ell=\ell_1}^{\ell_2}\left\{e^{\alpha_0\ell} + e^{-\alpha_0\ell}\right\} d\ell$$

$$= \frac{e^{-\alpha_0 z}}{\alpha_0}\left[\left(e^{\alpha_0\ell_2} - e^{\alpha_0\ell_1}\right) - \left(e^{-\alpha_0\ell_2} - e^{-\alpha_0\ell_1}\right)\right] . \quad (3.43)$$

Upon applying Eqs. (3.42) and (3.43), the equations for the vector potential in the various regions for a coil of rectangular cross section become

$$A^{(1)} = \frac{\mu I N}{2}\int_0^\infty \frac{1}{\alpha_0^2\alpha} J(r_2,r_1)J_1(\alpha r)\ e^{-\alpha_0 z}\left\{e^{\alpha_0\ell_2} - e^{\alpha_0\ell_1} - \left(e^{-\alpha_0\ell_2} - e^{-\alpha_0\ell_1}\right)\right.$$

$$\left.\times\left[\frac{(\alpha_0+\beta_1)(\beta_1-\beta_2) + (\alpha_0-\beta_1)(\beta_1+\beta_2)\ e^{2\alpha_1 c}}{(\alpha_0-\beta_1)(\beta_1-\beta_2) + (\alpha_0+\beta_1)(\beta_1+\beta_2)\ e^{2\alpha_1 c}}\right]\right\} d\alpha , \quad (3.44)$$

$$A^{(2)}(r,z) = \frac{\mu I N}{2}\int_0^\infty \frac{1}{\alpha_0^2\alpha} J(r_2,r_1)J_1(\alpha r)\left(e^{-\alpha_0\ell_1} - e^{-\alpha_0\ell_2}\right)$$

$$\times\left\{e^{\alpha_0 z} + \left[\frac{(\alpha_0+\beta_1)(\beta_1-\beta_2) + (\alpha_0-\beta_1)(\beta_1+\beta_2)\ e^{2\alpha_1 c}}{(\alpha_0-\beta_1)(\beta_1-\beta_2) + (\alpha_0+\beta_1)(\beta_1+\beta_2)\ e^{2\alpha_1 c}}\right]e^{-\alpha_0 z}\right\} d\alpha , \quad (3.45)$$

$$A^{(3)}(r,z) = \mu I N\int_0^\infty \frac{1}{\alpha^2\alpha_0} J(r_2,r_1)J_1(\alpha r)\left(e^{-\alpha_0\ell_1} - e^{-\alpha_0\ell_2}\right)$$

$$\times\left\{\frac{\alpha(\beta_1+\beta_2)\ e^{2\alpha_1 c}\ e^{\alpha_1 z} + \alpha(\beta_1-\beta_2)\ e^{-\alpha_1 z}}{(\alpha_0-\beta_1)(\beta_1-\beta_2) + (\alpha_0+\beta_1)(\beta_1+\beta_2)\ e^{2\alpha_1 c}}\right\} d\alpha , \quad (3.46)$$

and

$$A^{(4)}(r,z) = \mu I N\int_0^\infty \frac{1}{\alpha^2\alpha_0} J(r_2,r_1)J_1(\alpha r)\left(e^{-\alpha_0\ell_1} - e^{-\alpha_0\ell_2}\right)$$

$$\times\left\{\frac{2\alpha\beta_1\ e^{(\alpha_2+\alpha_1)c}\ e^{\alpha_2 z}}{(\alpha_0-\beta_1)(\beta_1-\beta_2) + (\alpha_0+\beta_1)(\beta_1+\beta_2)\ e^{2\alpha_1 c}}\right\} d\alpha . \quad (3.47)$$

Equation (3.44) for $A^{(1)}$ is valid in the region above the coil, and Eq. (3.45) for $A^{(2)}$ is valid for the region below the coil. We have to give special treatment to region I-II, between the top and bottom of the coil. For a point (r,z) in region I-II, we can use the equation for $A^{(1)}(r,z)$ for the portion of the coil from z down to ℓ_1 and the equation for $A^{(2)}(r,z)$ for the portion of the coil from z up to ℓ_2. If we substitute $\ell_2 = z$ in Eq. (3.44) and $\ell_1 = z$ in Eq. (3.45) and add the two equations, we get

$$A^{(1,2)}(r,z) = \frac{\mu I N}{2}\int_0^\infty \frac{1}{\alpha_0^2\alpha} J(r_2,r_1)J_1(\alpha r)\left\{2 - e^{\alpha_0(z-\ell_2)} - e^{-\alpha_0(z-\ell_1)}\right.$$

$$\left. + e^{-\alpha_0 z}\left(e^{-\alpha_0\ell_1} - e^{-\alpha_0\ell_2}\right)\left[\frac{(\alpha_0+\beta_1)(\beta_1-\beta_2) + (\alpha_0-\beta_1)(\beta_1+\beta_2)\, e^{2\alpha_1 c}}{(\alpha_0-\beta_1)(\beta_1-\beta_2) + (\alpha_0+\beta_1)(\beta_1+\beta_2)\, e^{2\alpha_1 c}}\right]\right\} d\alpha \ . \tag{3.48}$$

We have completed the general derivation of the vector potential of a coil of rectangular cross section above a two-conductor plane. We shall now use this vector potential to calculate a number of electromagnetic induction phenomena for this configuration.

2. Impedance of a Coil above a Two-Conductor Plane

To calculate the coil impedance, we substitute the equation for the vector potential at the coil, $A^{(1,2)}(r,z)$, into Eq. (2.18) and perform the integration over the dimensions of the coil. The result is

$$Z = \frac{j\omega\pi\mu n^2}{(\ell_2-\ell_1)^2(r_2-r_1)^2}\int_0^\infty \frac{1}{\alpha_0^3\alpha^3} J^2(r_2,r_1)\left\{2\alpha_0(\ell_2-\ell_1) + 2e^{-\alpha_0(\ell_2-\ell_1)} - 2\right.$$

$$+ \left(e^{-2\alpha_0\ell_2} + e^{-2\alpha_0\ell_1} - 2e^{-\alpha_0(\ell_2+\ell_1)}\right)$$

$$\left. \times \left[\frac{(\alpha_0+\beta_1)(\beta_1-\beta_2) + (\alpha_0-\beta_1)(\beta_1+\beta_2)\, e^{2\alpha_1 c}}{(\alpha_0-\beta_1)(\beta_1-\beta_2) + (\alpha_0+\beta_1)(\beta_1+\beta_2)\, e^{2\alpha_1 c}}\right]\right\} d\alpha \ . \tag{3.49}$$

This equation can be made more general by normalizing all the dimensions in terms of the mean coil radius, $\bar{r}$, defined by

$$\bar{r} = \frac{r_1 + r_2}{2} . \tag{3.50}$$

All lengths are divided by $\bar{r}$, and all α's and β's are multiplied by $\bar{r}$. After the dimensions are normalized, Eq. (3.49) becomes

$$Z = \frac{j\omega\pi\mu n^2\bar{r}}{(\ell_2-\ell_1)^2(r_2-r_1)^2} \int_0^\infty \frac{1}{\alpha_0^3\alpha^3} J^2(r_2,r_1) \Big\{2\alpha_0(\ell_2-\ell_1) + 2e^{-\alpha_0(\ell_2-\ell_1)} - 2$$

$$+ \left(e^{-2\alpha_0\ell_2} + e^{-2\alpha_0\ell_1} - 2e^{-\alpha_0(\ell_2+\ell_1)}\right)$$

$$\times \left[\frac{(\alpha_0+\beta_1)(\beta_1-\beta_2) + (\alpha_0-\beta_1)(\beta_1+\beta_2)\, e^{2\alpha_1 c}}{(\alpha_0-\beta_1)(\beta_1-\beta_2) + (\alpha_0+\beta_1)(\beta_1+\beta_2)\, e^{2\alpha_1 c}}\right]\Big\} d\alpha . \tag{3.51}$$

Now all lengths are scaled in terms of $\bar{r}$, and we have for the α's and β's

$$\beta_i \equiv \left(\frac{\mu_0}{\mu_i}\right)\sqrt{\alpha^2-\bar{r}^2\omega^2\mu_i\epsilon_i+j\bar{r}^2\omega\mu_i\sigma_i} \tag{3.52}$$

$$\alpha_i \equiv \sqrt{\alpha^2-\bar{r}^2\omega^2\mu_i\epsilon_i+j\bar{r}^2\omega\mu_i\sigma_i} \tag{3.53}$$

$$\alpha_0 \equiv \sqrt{\alpha^2-\bar{r}^2\omega^2\mu_0\epsilon_0} . \tag{3.54}$$

The impedance itself is normalized by dividing it by the magnitude of the air impedance. If we let $\alpha_1=\alpha_2=\beta_1=\beta_2=\alpha_0$, we obtain for the magnitude of the air impedance

$$|Z_{air}| = \frac{2\pi\omega\mu n^2\bar{r}}{(\ell_2-\ell_1)^2(r_2-r_1)^2} \int_0^\infty \frac{1}{\alpha_0^3\alpha^3} J^2(r_2,r_1) \left\{\alpha_0(\ell_2-\ell_1) + e^{-\alpha_0(\ell_2-\ell_1)} - 1\right\} d\alpha . \tag{3.55}$$

A computer program (CLADT) designed to calculate the normalized coil impedance for this case is given by Luquire et al.[20] In all the computer programs, α_0 is taken equal to α. It is only in rare cases that there is any appreciable difference between them. In fact, the difference could have been neglected in Eq. (3.4) but has been carried through to retain generality.

3. Inductance of a Coil in Air

From Eq. (2.16) the inductance of a coil in air is

$$L = \frac{2\pi\mu n^2 \bar{r}}{(\ell_2-\ell_1)^2(r_2-r_1)^2} \int_0^\infty \frac{1}{\alpha_0^3\alpha^3} J^2(r_2,r_1) \left\{\alpha_0(\ell_2-\ell_1) + e^{-\alpha_0(\ell_2-\ell_1)} - 1\right\} d\alpha \ . \tag{3.56}$$

A program (AIRC05) designed to carry out this integration is presented elsewhere.[20]

4. Defects in the Cladding Material

We can use Eq. (2.28), with the driving coil and the receiving coil being the same coil, to obtain the impedance change due to a small current defect:

$$Z' = \frac{3}{2}\sigma\omega^2\left(\frac{A}{I}\right)^2 \text{Vol}\ \alpha_{22} \ . \tag{3.57}$$

For defects in the cladding material, A is the vector potential in region III. The impedance change due to a small defect, in terms of normalized dimensions, is

$$Z' = \frac{3n^2\sigma_1\omega^2\mu^2\bar{r}^3\ \text{Vol}\ \alpha_{22}}{2(\ell_2-\ell_1)^2(r_2-r_1)^2} \left\{\int_0^\infty \frac{1}{\alpha_0\alpha^2} J(r_2,r_1)J_1(\alpha r)\left(e^{-\alpha_0\ell_1} - e^{-\alpha_0\ell_2}\right) \times \left[\frac{\alpha(\beta_1+\beta_2)\ e^{2\alpha_1 c}\ e^{\alpha_1 z} + \alpha(\beta_1-\beta_2)\ e^{-\alpha_1 z}}{(\alpha_0-\beta_1)(\beta_1-\beta_2) + (\alpha_0+\beta_1)(\beta_1+\beta_2)\ e^{2\alpha_1 c}}\right] d\alpha\right\}^2 . \tag{3.58}$$

[20] J. W. Luquire, C. V. Dodd, W. E. Deeds, and W. G. Spoeri, Computer Programs for Some Eddy Current Problems, ORNL-TM-2501 (in preparation).

This impedance change may be made dimensionless by normalizing the impedance by dividing by the magnitude of the coil impedance in air:

$$Z_n' = \frac{3}{4\pi}(\omega\mu\sigma_1\bar{r}^2)\ \mathrm{Vol}\ \alpha_{22}\left\{\int_0^\infty \frac{1}{\alpha_0\alpha^2} J(r_2,r_1)J_1(\alpha r)\left(e^{-\alpha_0\ell_1} - e^{-\alpha_0\ell_2}\right)\right.$$

$$\left.\times\left[\frac{\alpha(\beta_1+\beta_2)\ e^{2\alpha_1 c}\ e^{\alpha_1 z} + \alpha(\beta_1-\beta_2)\ e^{-\alpha_1 z}}{(\alpha_0-\beta_1)(\beta_1-\beta_2) + (\alpha_0+\beta_1)(\beta_1+\beta_2)\ e^{2\alpha_1 c}}\right] d\alpha\right\}^2$$

$$\div\int_0^\infty \frac{1}{\alpha_0^3\alpha^3} J^2(r_2,r_1)\left\{\alpha_0(\ell_2-\ell_1) + e^{-\alpha_0(\ell_2-\ell_1)} - 1\right\} d\alpha\ . \qquad (3.59)$$

To obtain the defect sensitivity factor, we divide Eq. (3.59) by Vol α_{22}. A program (DEFEC5) designed to calculate this factor for a single, small, current defect in the cladding material is given by Luquire et al.[20] In the same work there is another program (DELAT) for calculating the defect sensitivity factor for a defect at a point on a lattice in the cladding material.

5. Defects in the Base Material

The derivation for defects in the base material is similar to the preceding one, except the vector potential in region IV is used. We obtain for the normalized impedance change

$$Z_n' = \frac{3}{4\pi}(\omega\mu\sigma_2\bar{r}^2)\ \mathrm{Vol}\ \alpha_{22}\left\{\int_0^\infty \frac{1}{\alpha^2\alpha_0} J(r_2,r_1)J_1(\alpha r)\left(e^{-\alpha_0\ell_1} - e^{-\alpha_0\ell_2}\right)\right.$$

$$\left.\times\left[\frac{2\alpha\beta_1\ e^{(\alpha_2+\alpha_1)c}\ e^{\alpha_2 z}}{(\alpha_0-\beta_1)(\beta_1-\beta_2) + (\alpha_0+\beta_1)(\beta_1+\beta_2)\ e^{2\alpha_1 c}}\right] d\alpha\right\}^2$$

$$\div\int_0^\infty \frac{1}{\alpha_0^3\alpha^3} J^2(r_2,r_1)\left\{\alpha_0(\ell_2-\ell_1) + e^{-\alpha_0(\ell_2-\ell_1)} - 1\right\} d\alpha\ . \qquad (3.60)$$

We have designed a program (DEFECB) to calculate the defect sensitivity factor for a small current defect in the base material.[20]

6. Eddy-Current Force

The eddy-current force density at a point in a conductor can be calculated by substituting the integral equation for the vector potential into Eq. (2.45). We will now compute the net force of a coil above a single conductor. The vector potential in a single conductor reduces to

$$A^{(3,4)}(r,z) = \mu IN \int_0^\infty \frac{1}{\alpha^2\alpha_0} J(r_2,r_1)J_1(\alpha r)\left(e^{-\alpha_0\ell_1} - e^{-\alpha_0\ell_2}\right)\frac{\alpha \quad e^{\alpha_1 z}}{\alpha_0+\beta_1}\, d\alpha \ , \tag{3.61}$$

and the only net force density, when averaged over time, is

$$F_z = \frac{\omega\sigma}{2}\left[\mathrm{Im}\, A^{(3,4)}(r,z)\ \mathrm{Rl}\ \frac{\partial A^{(3,4)}}{\partial z}(r,z) - \mathrm{Rl}\ A^{(3,4)}(r,z)\ \mathrm{Im}\ \frac{\partial A^{(3,4)}}{\partial z}(r,z)\right] . \tag{3.62}$$

By inspection we can write Eq. (3.62) as

$$F_z = \mathrm{Rl}\left[-\frac{1}{2}\, j\omega\sigma\ A^{(3,4)}(r,z)\left(\frac{\partial A^{(3,4)}}{\partial z}(r,z)\right)^*\right] , \tag{3.63}$$

where the asterisk represents the complex conjugate.

To get the total force on the metal, we integrate the force density over the volume of the metal:

$$F_{total} = \int_{z=0}^{-\infty}\int_{r=0}^{\infty} \mathrm{Rl}\left[-\frac{1}{2}\, j\omega\sigma A^{(3,4)}(r,z)\left(\frac{\partial A^{(3,4)}}{\partial z}(r,z)\right)^*\right] 2\pi r dr dz \ . \tag{3.64}$$

Substituting the vector potential from Eq. (3.61) into this equation and setting $\alpha_0 = \alpha$ gives

$$F_{total} = \int_{-\infty}^{0}\int_{0}^{\infty} \mathrm{Rl}\left[-\frac{1}{2}\, j\omega\sigma\mu^2 N^2 I^2 \int_0^\infty \frac{1}{\alpha^3}\, J(r_2,r_1) J_1(\alpha r)\left(e^{-\alpha\ell_1} - e^{-\alpha\ell_2}\right)\frac{\alpha_1\, e^{\alpha_1 z}}{\alpha+\beta_1}\, d\alpha \right.$$

$$\left. \times \int_0^\infty \frac{1}{\alpha'^3}\, J(r_2,r_1) J_1(\alpha' r)\left(e^{-\alpha'\ell_1} - e^{-\alpha'\ell_2}\right)\left(\frac{\alpha'\alpha_1'\, e^{\alpha_1' z}}{\alpha'+\beta_1'}\right)^* d\alpha' \right] 2\pi r dr dz \ . \tag{3.65}$$

We can reverse the order of integration and perform the integration over r first. We shall use the fact that

$$\int_{r=0}^{\infty} \alpha r\, J_1(\alpha r)\, J_1(\alpha' r)\, dr = \delta(\alpha-\alpha') \ . \tag{3.66}$$

In addition, we shall let $\mu=\mu_0$ so that $\beta_1=\alpha_1$ and write α_1 in terms of its real and imaginary parts:

$$\alpha_1 \equiv x_1 + jy_1 \ . \tag{3.67}$$

Equation (3.65) then becomes

$$F_{total} = \mathrm{Rl}\left[-\pi j\omega\sigma\mu^2 N^2 I^2 \int_0^\infty \frac{1}{\alpha^5}\, J^2(r_2,r_1)\left(e^{-\alpha\ell_1} - e^{-\alpha\ell_2}\right)^2 \right.$$

$$\left. \times \frac{1}{\alpha+\alpha_1}\left(\frac{\alpha_1}{\alpha+\alpha_1}\right)^* \int_{-\infty}^{0} \ell^{(\alpha_1+\alpha_1^*)z}\, dz d\alpha \right] . \tag{3.68}$$

After performing the integration in the z direction, substituting for the turn density N in terms of n, and taking only the real part, we have

$$F_{total} = -\frac{\pi\omega\mu^2\sigma n^2 I^2 \overline{r}^2}{2(\ell_2-\ell_1)^2(r_2-r_1)^2}\int_0^\infty \frac{1}{\alpha^5}\, J^2(r_2,r_1)\left(e^{-\alpha\ell_1} - e^{-\alpha\ell_2}\right)^2 \frac{y_1}{x_1[(\alpha+x_1)^2+y_1^2]}\, d\alpha \ . \tag{3.69}$$

This is the net eddy-current force produced on the conductor. A computer program (FORCE5) designed to calculate this force is given by Luquire et al.[20]

B. Reflection Coil above a Two-Conductor Plane

A reflection coil, as shown in Fig. 6, is usually used in the phase-sensitive eddy-current instrument.[21,22] This configuration is actually a combination of special cases of the single coil above a two-conductor plane.

1. Voltage and Phase of a Reflection-Type Coil

We shall obtain the difference between the voltages induced in the two small pickup coils by a current in the large driver coil. The pick-up coils are connected in opposition so that, in air, the voltage difference vanishes. However, when the coils are placed near a metal, there exists a voltage difference caused by a "reflected wave" coming back from the metal. The net voltage induced in the pickup coils is

$$V = V_{pu_2} - V_{pu_1} , \tag{3.70}$$

where the first pickup is nearer the metal than the second pickup. According to Eq. (2.11) the voltage in terms of the vector potential is

$$V = \frac{j2\pi\omega n'}{(\ell_6-\ell_5)(r_4-r_3)}\int_{\ell_5}^{\ell_6}\int_{r_3}^{r_4} rA^{(1,2)}(r,z)\, drdz - \frac{j2\pi\omega n'}{(\ell_4-\ell_3)(r_4-r_3)}\int_{\ell_3}^{\ell_4}\int_{r_3}^{4} rA^{(1,2)}(r,z)\, drdz. \tag{3.71}$$

Due to the symmetry of the pickup coils, $\ell_6-\ell_5$ is equal to $\ell_4-\ell_3$, and the coils are recessed an equal distance from the ends of the driver.

---

[21] C. V. Dodd, Mater. Evaluation 22(6), 260–263 (1964).

[22] C. V. Dodd, Mater. Evaluation 26(3), 33–36 (1968).

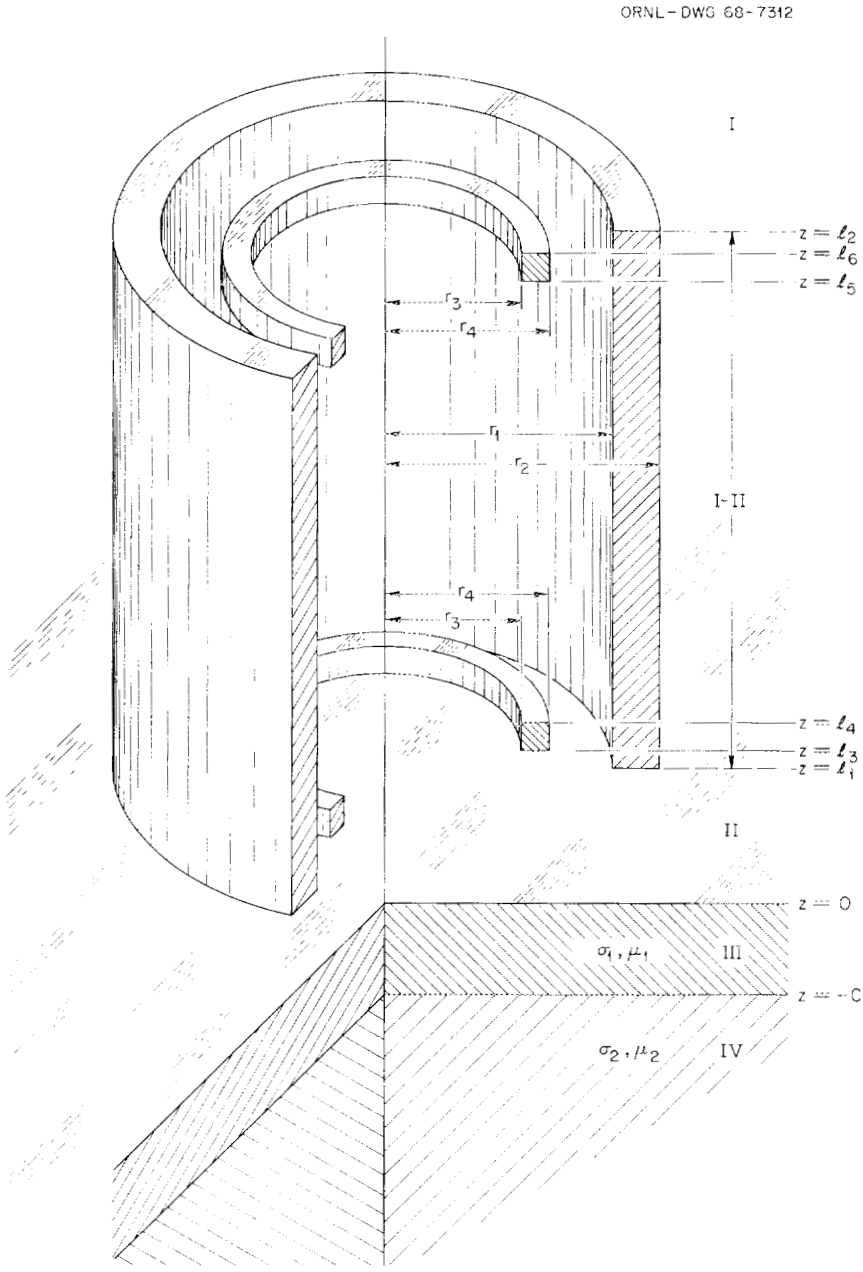

Fig. 6. A Reflection-Type Coil above a Two-Conductor Plane.

Substituting the vector potential from Eq. (3.48) into (3.71), performing the integration over r and z, and normalizing the dimensions gives

$$V = \frac{j\omega\pi\mu nn' I\bar{r}}{(r_2-r_1)(r_4-r_3)(\ell_2-\ell_1)(\ell_6-\ell_5)} \int_0^\infty \frac{1}{\alpha^6} J(r_2,r_1)J(r_4,r_3)$$

$$\left(e^{-\alpha\ell_5} - e^{-\alpha\ell_6} + e^{-\alpha\ell_4} - e^{-\alpha\ell_3}\right)$$

$$\times \left(e^{-\alpha\ell_1} - e^{-\alpha\ell_2}\right) \left\{\frac{(\alpha+\beta_1)(\beta_1-\beta_2) + (\alpha-\beta_1)(\beta_1+\beta_2)\ e^{2\alpha_1 c}}{(\alpha-\beta_1)(\beta_1-\beta_2) + (\alpha+\beta_1)(\beta_1+\beta_2)\ e^{2\alpha_1 c}}\right\} d\alpha \ . \qquad (3.72)$$

We can make the following definitions:

L_2 = length of the driver coil,

L_6 = length of the pickup coil,

L_5 = distance the pickup coils are recessed,

L = spacing between driver coil and metal or "lift-off."

Substituting these into Eq. (3.72) yields

$$V = \frac{j\omega\pi\mu nn' I\bar{r}}{(r_2-r_1)(r_4-r_3)\ L_2L_6} \int_0^\infty \frac{1}{\alpha^6} J(r_2,r_1)J(r_4,r_3)\ e^{-2\alpha L} \left(e^{-\alpha(L_2-2L_5-L_6)} - 1\right)$$

$$\times \left(e^{-\alpha L_5} - e^{-\alpha(L_6+L_5)}\right)\left(1 - e^{-\alpha L_2}\right) \left\{\frac{(\alpha+\beta_1)(\beta_1-\beta_2) + (\alpha-\beta_1)(\beta_1+\beta_2)\ e^{2\alpha_1 c}}{(\alpha-\beta_1)(\beta_1-\beta_2) + (\alpha+\beta_1)(\beta_1+\beta_2)\ e^{2\alpha_1 c}}\right\} d\alpha \ .$$

(3.73)

A computer program (RFLCT) designed to calculate the phase and amplitude of this voltage may be found in the literature.[23]

---

[23] J. W. Luquire, C. V. Dodd, W. E. Deeds, and W. G. Spoeri, Computer Programs for Some Eddy Current Problems, ORNL-TM-2501 (in preparation).

2. Lift-Off Compensation in the Phase-Sensitive Eddy-Current Instrument

For reflection-type coils, a variation in lift-off produces small variations in the phase shift and large variations in the amplitude of the reflected wave. Moreover, the discriminator in the phase-sensitive eddy-current instrument may be adjusted to minimize these variations in the phase shift. Figure 7 shows the voltage wave form for zero lift-off and maximum lift-off. We want the discriminator to trigger at the same point in time with zero lift-off and with maximum lift-off. This requires that we adjust the discriminator to trigger at voltage V_1, given by

$$V_1 = A_1 \sin(\phi_1 + \delta_1) \tag{3.74}$$

where

$$\phi_1 = \arctan \left\{ \frac{A_2 \sin \delta_2 - A_1 \sin \delta_1}{A_1 \cos \delta_1 - A_2 \cos \delta_2} \right\} . \tag{3.75}$$

ORNL-DWG 68-10310

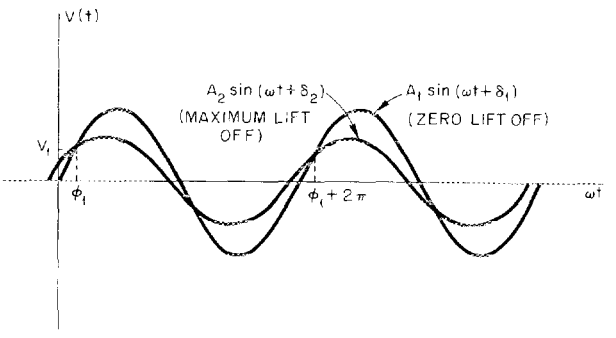

Fig. 7. Voltage Wave Form for Zero Lift-Off and Maximum Lift-Off.

Any other signal with magnitude A_i and phase shift δ_i will trigger the discriminator when it passes through V_1, or when

$$V_1 = A_i \sin(\phi_i + \delta_i) . \tag{3.76}$$

To determine the phase shift from ϕ_1 due to a change in lift-off, thickness or conductivity, we subtract ϕ_i from ϕ_1 to get

$$\text{Phase Shift} = \phi_1 - \phi_i = \phi_1 - \arctan\left(\frac{V_1}{\sqrt{A_1^2 - V_1^2}}\right) + \delta_i \ . \tag{3.77}$$

Luquire <u>et al.</u>[23] give a program (DISC) designed to calculate this phase shift. In addition they give another program (RFLCYC) designed to calculate the phase shift for an incremental thickness change. It first calculates the phase and amplitude of the voltage at zero and maximum lift-off for the nominal thickness value, sets the discriminator to trigger at the proper voltage V_1, and then calculates the phase shift for small variations from the nominal thickness. The program will perform these calculations for a number of different values of $\bar{r}^2\omega\mu\sigma$.

3. <u>Defects in the Cladding Material</u>

We can write the equation for the voltage induced in the pickup coils by the presence of a current defect when a current, I, is flowing in the driver coil simply by substituting the vector potential for region III in Eq. (2.28) to obtain

$$V_{2d} = \frac{3}{2}\,\frac{\sigma_1\omega^2 nn'\mu^2 \text{ Vol } \alpha_{22} I_1}{(\ell_2-\ell_1)(\ell_4-\ell_3)(r_2-r_1)(r_4-r_3)} \int_0^\infty \frac{1}{\alpha^3}\, J(r_2,r_1) J_1(\alpha r)\left(e^{-\alpha\ell_1} - e^{-\alpha\ell_2}\right)$$

$$\times \left\{\frac{\alpha(\beta_1+\beta_2)\ e^{2\alpha_1 c}\ e^{\alpha_1 z} + \alpha(\beta_1-\beta_2)e^{-\alpha_1 z}}{(\alpha-\beta_1)(\beta_1-\beta_2) + (\alpha+\beta_1)(\beta_1+\beta_2)\ e^{2\alpha_1 c}}\right\} d\alpha$$

$$\times \int_0^\infty \frac{1}{\alpha^3}\, J(r_4,r_3) J_1(\alpha r)\left(e^{-\alpha\ell_5} - e^{-\alpha\ell_6} - e^{-\alpha\ell_4} + e^{-\alpha\ell_3}\right)$$

$$\times \left\{\frac{\alpha(\beta_1+\beta_2)\ e^{2\alpha_1 c}\ e^{\alpha_1 z} + \alpha(\beta_1-\beta_2)e^{-\alpha_1 z}}{(\alpha-\beta_1)(\beta_1-\beta_2) + (\alpha+\beta_1)(\beta_1+\beta_2)e^{2\alpha_1 c}}\right\} d\alpha \ . \tag{3.78}$$

We shall now normalize the dimensions in Eq. (3.78) and again write the equation in terms of the dimensions of the driver coil, the pickup coil, the pickup coil recess, and the lift-off:

$$V_{2d} = \frac{3}{2\pi}\,(\overline{r}^2\omega\mu\sigma_1)\left(\frac{\omega\mu\pi nn'\overline{r}I_1}{(r_2-r_1)(r_4-r_3)\;L_2L_6}\right)\mathrm{Vol}\;\alpha_{22}\int_0^\infty \frac{1}{\alpha^3}\,J(r_2,r_1)J_1(\alpha r)$$

$$\left(1-e^{-\alpha L_2}\right)\times\left\{\frac{\alpha(\beta_1+\beta_2)\;e^{2\alpha_1 c}\;e^{\alpha_1 z}+\alpha(\beta_1-\beta_2)e^{-\alpha_1 z}}{(\alpha-\beta_1)(\beta_1-\beta_2)\;+\;(\alpha+\beta_1)(\beta_1+\beta_2)\;e^{2\alpha_1 c}}\right\}d\alpha$$

$$\times\int\frac{1}{\alpha^3}\,J(r_4,r_3)J_1(\alpha r)\;e^{-\alpha L}\left(e^{-\alpha(L_2-2L_5-L_6)}+1\right)\left(e^{-\alpha(L_5)}-e^{-\alpha(L_5+L_6)}\right)$$

$$\times\left\{\frac{\alpha(\beta_1+\beta_2)\;e^{2\alpha_1 c}\;e^{\alpha_1 z}+\alpha(\beta_1-\beta_2)e^{-\alpha_1 z}}{(\alpha-\beta_1)(\beta_1-\beta_2)\;+\;(\alpha+\beta_1)(\beta_1+\beta_2)\;e^{2\alpha_1 c}}\right\}d\alpha\;, \qquad (3.79)$$

which when divided by $I_1\mathrm{Vol}\;\alpha_{22}$ yields the defect sensitivity factor. A program (RFDFT), given by Luquire et al.,[23] has been designed to calculate the defect sensitivity factor for this case. In the same work there is also a program (RFDFL2) designed to calculate this factor for defects located at any one of a number of points on a lattice. Another program (BASREAD) will read the results of (RFDFL2) and recalculate the phase shift with lift-off fixed.

4. Defects in the Base Material

The derivation for defects in the base material is the same as the preceding one, except that we use the vector potential in region IV from Eq. (3.47) and obtain

$$V_{2d} = \frac{3}{2\pi}\,(\overline{r}^2\omega\mu\sigma_2)\left(\frac{\omega\mu\pi nn'\overline{r}I_1}{(r_2-r_1)(r_4-r_3)\;L_2L_6}\right)\mathrm{Vol}\;\alpha_{22}\int_0^\infty \frac{1}{\alpha^3}\,J(r_2,r_1)J_1(\alpha r)\;e^{-\alpha L}$$

$$\left(1-e^{-\alpha L_2}\right)\times\left\{\frac{2\alpha\beta_1\;e^{(\alpha_1+\alpha_2)c}\;e^{\alpha_2 z}}{(\alpha-\beta_1)(\beta_1-\beta_2)\;+\;(\alpha+\beta_1)(\beta_1+\beta_2)\;e^{2\alpha_1 c}}\right\}d\alpha$$

$$\times\int_0^\infty\frac{1}{\alpha^3}\,J(r_4,r_3)J_1(\alpha r)\;e^{-\alpha L}\left(e^{-\alpha(L_2-2L_5-L_6)}+1\right)\left(e^{-\alpha L_5}-e^{-\alpha(L_5+L_6)}\right)$$

$$\times\left\{\frac{2\alpha\beta_1\;e^{(\alpha_1+\alpha_2)c}\;e^{\alpha_2 z}}{(\alpha-\beta_1)(\beta_1-\beta_2)\;+\;(\alpha+\beta_1)(\beta_1+\beta_2)\;e^{2\alpha_1 c}}\right\}d\alpha\;. \qquad (3.80)$$

A program (RFDFTB) presented elsewhere[23] is designed to calculate the defect sensitivity factor for a small current defect in the base material.

C. Through Transmission

A through-transmission coil arrangement is shown in Fig. 8. Here we have a signal, transmitted by a large driver coil through a metal plate, received by a pickup coil. This case is almost identical to the reflection case except that the pickup coil is now located in region IV.

1. Voltage and Phase of a Through-Transmission Coil

We shall obtain the phase and amplitude of the voltage induced in the pickup coil by a current flowing in the driver coil. Substituting the vector potential in region IV, as given by Eq. (3.47), with $\sigma_2=0$ into Eq. (2.11) gives

$$V = \frac{j2\pi\omega nn'\mu I}{(r_2-r_1)(r_2'-r_1')\ T\ T'} \int_{\alpha=0}^{\infty} \int_{z=-(C+\ell'+T')}^{z=-(C+\ell')} \int_{r_1'}^{r_2'} \frac{1}{\alpha^3} J(r_2,r_1) r J_1(\alpha r)\ e^{-\alpha\ell}\left(1 - e^{-\alpha T}\right)$$

$$\times \frac{2\alpha\beta_1\ e^{(\alpha+\alpha_1)c}\ e^{\alpha z}}{(\alpha+\beta_1)^2\ e^{2\alpha_1 c} - (\alpha-\beta_1)^2}\ dr dz d\alpha\ , \quad (3.81)$$

where ℓ and T (ℓ' and T′) are the lift-off and length of the driver (pickup) coil, respectively. Performing the integration yields

$$V = \frac{j4\pi\omega nn' I\mu}{(r_2-r_1)(r_2'-r_1')\ TT'} \int_0^{\infty} \frac{1}{\alpha^5} J(r_2,r_1) J(r_2',r_1') \left(1 - e^{-\alpha T}\right)\left(1 - e^{-\alpha T'}\right)$$

$$\times \frac{e^{-\alpha(\ell+\ell')}\ \beta_1\ e^{\alpha_1 c}}{(\alpha+\beta_1)^2\ e^{2\alpha_1 c} - (\alpha-\beta_1)^2}\ d\alpha\ . \quad (3.82)$$

We have presented elsewhere[23] a computer program (THRU5) designed to calculate the phase and amplitude of the voltage for a through-transmission coil.

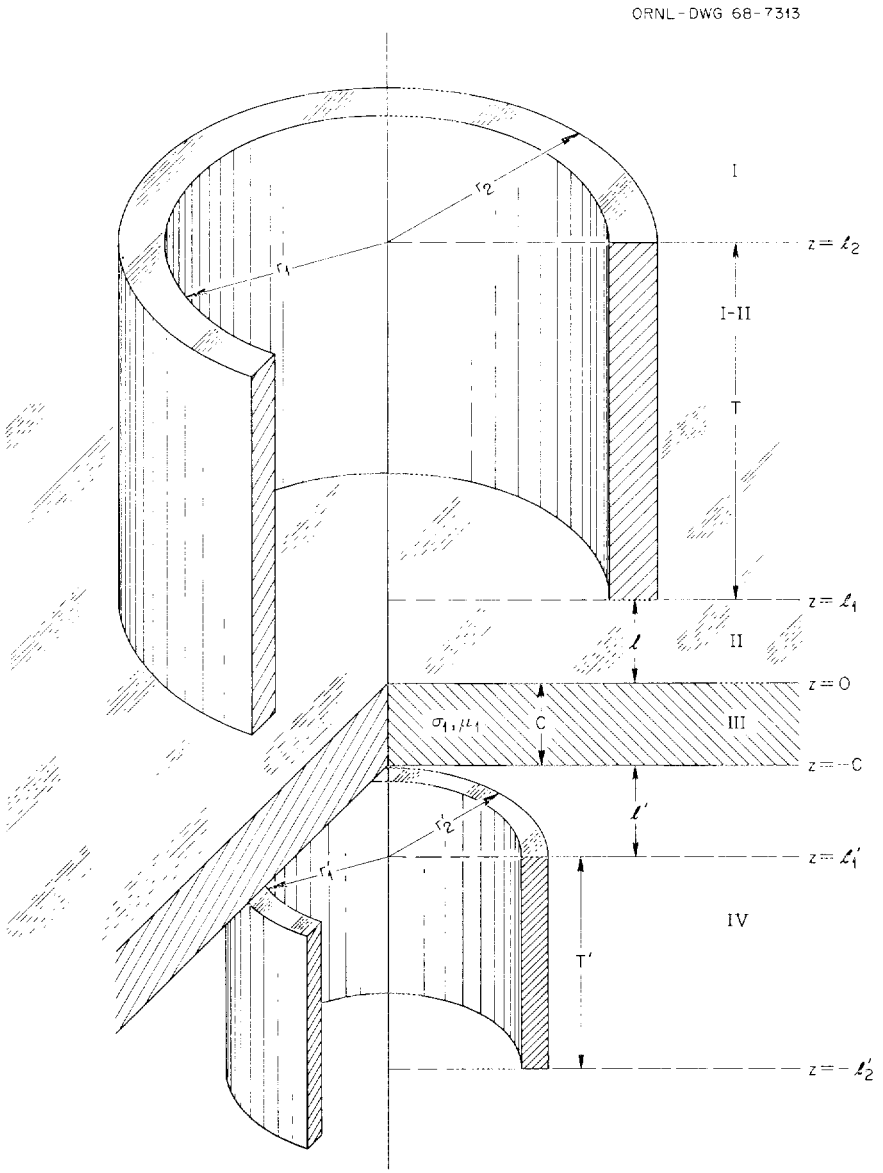

Fig. 8. A Through-Transmission Coil Arrangement.

2. Defects in a Plate

We can easily write the equation for the voltage in the pickup coil induced by the presence of a current defect when a current flows in the driver coil. This is the same as the reflection case, except that now the pickup coil is on the opposite side of the metal. The vector potential produced at the defect by a unit current flowing in the pickup is given by the same expression as that for the driver,

except that the distance of the defect beneath the metal now is set equal to c-z. If we normalize the dimensions by $\bar{r}$ and let $\sigma_2=0$, we have

$$V_{2d} = \frac{3(\bar{r}^2\omega\mu\sigma_1)}{2\pi}\left(\frac{\omega\mu\pi nn'\bar{r}I_1}{(r_2-r_1)(r_2'-r_1')\ TT'}\right) \text{Vol}\ \alpha_{22}\int_0^\infty \frac{1}{\alpha^3}\ J(r_2,r_1)J_1(\alpha r)\ e^{-\alpha\ell}$$

$$\left(1-e^{-\alpha T}\right)\times\frac{\alpha(\alpha+\beta_1)\ e^{2\alpha_1 c}\ e^{\alpha_1 z}+\alpha(\alpha-\beta_1)\ e^{-\alpha_1 z}}{(\alpha+\beta_1)^2\ e^{2\alpha_1 c}-(\alpha-\beta_1)^2}\ d\alpha$$

$$\times\int_0^\infty \frac{1}{\alpha^3}\ J(r_2',r_1')J_1(\alpha r)\ e^{-\alpha\ell'}\left(1-e^{-\alpha T'}\right)$$

$$\times\frac{\alpha(\alpha+\beta_1)\ e^{2\alpha_1 c}\ e^{\alpha_1(c-z)}+\alpha(\alpha-\beta_1)\ e^{-\alpha_1(c-z)}}{(\alpha+\beta_1)^2\ e^{2\alpha_1 c}-(\alpha-\beta_1)^2}\ d\alpha\ , \quad (3.83)$$

which we divide by I_1 Vol α_{22} to obtain the defect sensitivity factor. In the work of Luquire et al.[23] there is a program (THRUDF) designed to calculate the defect sensitivity factor for this case.

D. Coil between Two Conducting Plates

This configuration is used for spacing measurements,[24] and is shown in Fig. 9.

1. General Derivation

The differential equation for this case is Eq. (2.1), and the general solution is given in Eq. (3.10). However, when we write the equations for the vector potential in each region we obtain

$$A^{(1)}(r,z) = \int_0^\infty B_1(\alpha)\ e^{-\alpha_1 z}\ J_1(\alpha r)\ d\alpha\ , \quad (3.84)$$

---

[24]C. V. Dodd and R. W. McClung, Fuel Element Coolant Channel and Other Spacing Measurements by Eddy-Current Techniques, ORNL-TM-129 (1962).

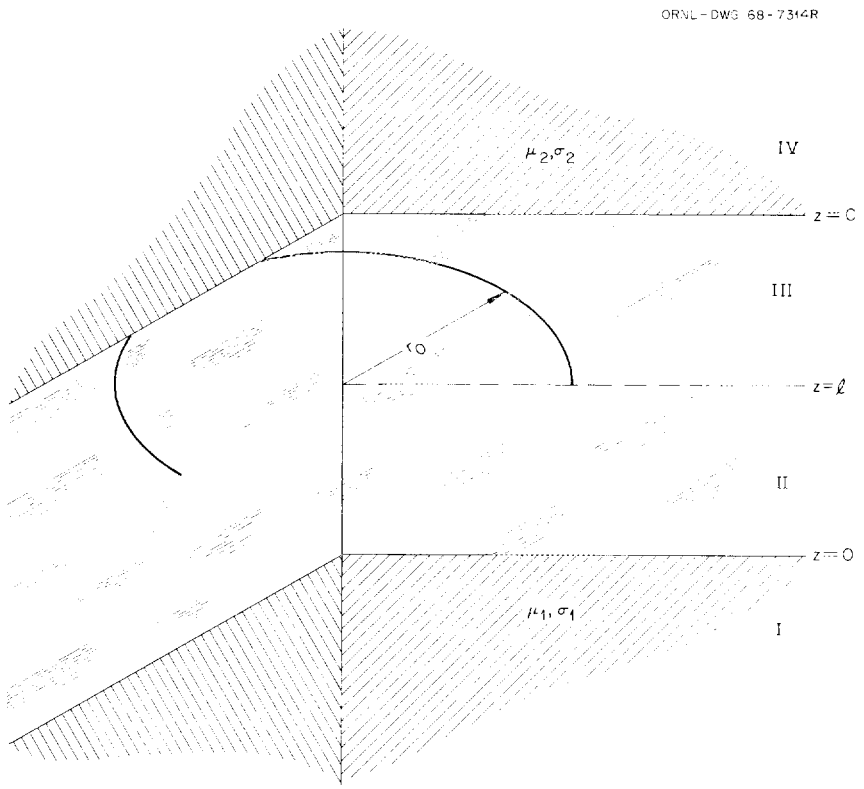

Fig. 9. A Delta Function Coil between Two Conducting Plates.

$$A^{(2)}(r,z) = \int_0^\infty \left\{C_2(\alpha)\ e^{\alpha z} + B_2(\alpha)\ e^{-\alpha z}\right\} J_1(\alpha r)\ d\alpha\ , \tag{3.85}$$

$$A^{(3)}(r,z) = \int_0^\infty \left\{C_3(\alpha)\ e^{\alpha z} + B_3(\alpha)\ e^{-\alpha z}\right\} J_1(\alpha r)\ d\alpha\ , \tag{3.86}$$

and

$$A^{(4)}(r,z) = \int_0^\infty C_4(\alpha)\ e^{\alpha_2 z}\ J_1(\alpha r)\ d\alpha\ . \tag{3.87}$$

The boundary conditions between the different regions are

$$A^{(1)}(r,c) = A^{(2)}(r,c)\ , \tag{3.88}$$

$$\frac{1}{\mu_1}\frac{\partial A^{(1)}}{\partial z}(r,z)\Big]_{z=c} = \frac{\partial A^{(2)}}{\partial z}(r,z)\Big]_{z=c} \quad , \tag{3.89}$$

$$A^{(2)}(r,\ell) = A^{(3)}(r,\ell) \ , \tag{3.90}$$

$$\frac{\partial A^{(2)}}{\partial z}(r,z)\Big]_{z=\ell} = \frac{\partial A^{(3)}}{\partial z}(r,z)\Big]_{z=\ell} , \tag{3.91}$$

$$A^{(3)}(r,0) = A^{(4)}(r,0) \quad , \tag{3.92}$$

$$\frac{\partial A^{(3)}}{\partial z}(r,z)\Big]_{z=0} = \frac{1}{\mu_2}\frac{\partial A^{(4)}}{\partial z}(r,z)\Big]_{z=0} \tag{3.93}$$

We can substitute Eqs. (3.84) through (3.87) into Eqs. (3.88) through (3.93), multiply by $\int_0^\infty J_1(\alpha' r)\, r dr$, reverse the order of integration, and use the Fourier-Bessel integral to simplify them. We then get

$$B_1\, e^{-\alpha_1 c} = C_2\, e^{\alpha c} + B_2\, e^{-\alpha c} \ , \tag{3.94}$$

$$-\frac{\beta_1}{\alpha} B_1\, e^{-\alpha_1 c} = C_2\, e^{\alpha c} - B_2\, e^{-\alpha c} \quad , \tag{3.95}$$

$$C_2\, e^{\alpha\ell} + B_2\, e^{-\alpha\ell} = C_3\, e^{\alpha\ell} + B_3\, e^{-\alpha\ell} \ , \tag{3.96}$$

$$C_2\, e^{\alpha\ell} - B_2\, e^{-\alpha\ell} = C_3\, e^{\alpha\ell} - B_3\, e^{-\alpha\ell} - \mu I r_0 J_1(\alpha r_0) \ , \tag{3.97}$$

$$C_3 + B_3 = C_4 \ , \tag{3.98}$$

$$C_3 - B_3 = \frac{\beta_2}{\alpha} C_4 \ . \tag{3.99}$$

We have six equations and six unknowns. If we solve for each constant and substitute the results into Eqs. (3.84) through (3.87), we get for the vector potential in each region

$$A^{(1)}(r,z) = \frac{\mu I}{2}\int_0^\infty r_0 J_1(\alpha r_0) J_1(\alpha r)\; e^{-\alpha_1 z}\; 2\alpha\; e^{(\alpha_1-\alpha)c}$$

$$\times \left[\frac{(\alpha+\beta_2)\; e^{\alpha\ell} + (\alpha-\beta_2)\; e^{-\alpha\ell}}{(\alpha+\beta_1)(\alpha+\beta_2) - (\alpha-\beta_1)(\alpha-\beta_2)\; e^{-2\alpha c}}\right] d\alpha\ , \qquad (3.100)$$

$$A^{(2)}(r,z) = \frac{\mu I}{2}\int_0^\infty r_0 J_1(\alpha r_0) J_1(\alpha r)[(\alpha+\beta_2)\; e^{\alpha\ell} + (\alpha-\beta_2)\; e^{-\alpha\ell}]$$

$$\times \left[\frac{(\alpha-\beta_1)\; e^{\alpha(z-2c)} + (\alpha+\beta_1)\; e^{-\alpha z}}{(\alpha+\beta_1)(\alpha+\beta_2) - (\alpha-\beta_1)(\alpha-\beta_2)\; e^{-2\alpha c}}\right] d\alpha\ , \qquad (3.101)$$

$$A^{(3)}(r,z) = \frac{\mu I}{2}\int_0^\infty r_0 J_1(\alpha r_0) J_1(\alpha r)[(\alpha-\beta_1)\; e^{-2\alpha c}\; e^{\alpha\ell} + (\alpha+\beta_1)\; e^{-\alpha\ell}]$$

$$\times \left[\frac{(\alpha+\beta_2)\; e^{\alpha z} + (\alpha-\beta_2)\; e^{-\alpha z}}{(\alpha+\beta_1)(\alpha+\beta_2) - (\alpha-\beta_1)(\alpha-\beta_2)\; e^{-2\alpha c}}\right] d\alpha\ , \qquad (3.102)$$

and

$$A^{(4)}(r,z) = \frac{\mu I}{2}\int_0^\infty r_0 J_1(\alpha r_0) J_1(\alpha r)\; 2\alpha e^{\alpha_2 z}$$

$$\times \left[\frac{(\alpha-\beta_1)\; e^{-2\alpha c}\; e^{\alpha\ell} + (\alpha+\beta_1)\; e^{-\alpha\ell}}{(\alpha+\beta_1)(\alpha+\beta_2) - (\alpha-\beta_1)(\alpha-\beta_2)\; e^{-2\alpha c}}\right] d\alpha. \qquad (3.103)$$

We now have the equations for the vector potential due to the current in a delta function coil between two conducting planes. We can use Eq. (2.5) to superimpose the vector potentials of delta function coils to find the vector potential produced by a coil of rectangular cross section as shown in Fig. 10. Since we are concerned only with the region containing the coil, region II-III, we have

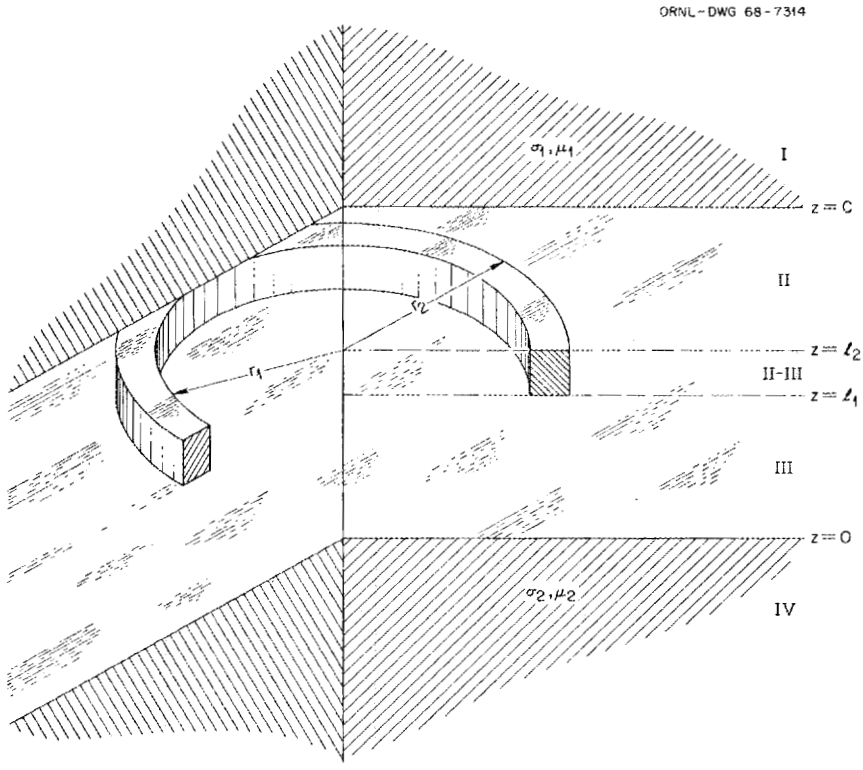

Fig. 10. A Coil of Rectangular Cross Section between Two Conducting Plates.

$$A^{(2,3)}(r,z) = NI \int_{r_0=r_1}^{r_2} \int_{\ell=\ell_1}^{z} \frac{A_0^{(2)}(r,r_0,z,\ell)}{i_0} \, dr_0 d\ell$$

$$+ NI \int_{r_0=r_1}^{r_2} \int_{\ell=z}^{\ell_2} \frac{A_0^{(3)}(r,r_0,z,\ell)}{i_0} \, dr_0 d\ell \ . \qquad (3.104)$$

Carrying out this integration yields

$$A^{(2,3)}(r,z) = \frac{\mu IN}{2}\int_0^\infty \frac{1}{\alpha^3} J(r_2,r_1)J_1(\alpha r) \left\{2 + \frac{e^{\alpha z}[(\alpha-\beta_1)(\alpha-\beta_2)\ e^{-2\alpha c-\alpha\ell_1}}{}\right.$$

$$\frac{-(\alpha+\beta_1)(\alpha+\beta_2)\ e^{-\alpha\ell_2} + (\alpha-\beta_1)(\alpha+\beta_2)\ e^{-2\alpha c+\alpha\ell_2} - (\alpha-\beta_1)(\alpha+\beta_2)\ e^{-2\alpha c+\alpha\ell_1}]}{(\alpha+\beta_1)(\alpha+\beta_2) - (\alpha-\beta_1)(\alpha-\beta_2)\ e^{-2\alpha c}}$$

$$+ \frac{e^{-\alpha z}[(\alpha+\beta_1)(\alpha-\beta_2)\ e^{-\alpha\ell_1} - (\alpha+\beta_1)(\alpha+\beta_2)\ e^{\alpha\ell_1} + (\alpha-\beta_1)(\alpha-\beta_2)\ e^{-2\alpha c+\alpha\ell_2}}{}$$

$$\left.\frac{-(\alpha+\beta_1)(\alpha-\beta_2)\ e^{-\alpha\ell_2}]}{}\right\} d\alpha \ . \quad (3.105)$$

This is the equation for the vector potential of a coil with rectangular cross section in region II-III.

2. Impedance of a Coil between Two Conducting Plates

To calculate the coil impedance, we substitute the equation for the vector potential in region II-III into Eq. (2.18) and integrate over the dimensions of the coil. In addition, we normalize the dimensions in terms of $\bar{r}$. We then have

$$Z = \frac{j\omega\mu n^2\pi\bar{r}}{(r_2-r_1)^2(\ell_2-\ell_1)^2}\int_0^\infty \frac{1}{\alpha^5} J^2(r_2,r_1) \left\{2(\ell_2-\ell_1) + f(\alpha) + f(-\alpha)\right\} d\alpha \ , \quad (3.106)$$

where $f(\alpha)$ is defined by

$$f(\alpha) \equiv \frac{\alpha+\beta_1}{\alpha}\left[\frac{2(\alpha+\beta_2)(e^{-\alpha(\ell_2-\ell_1)} - 1) + (\alpha-\beta_2)(e^{-\alpha\ell_2} - e^{-\alpha\ell_1})^2}{(\alpha+\beta_1)(\alpha+\beta_2) - (\alpha-\beta_1)(\alpha-\beta_2)\ e^{-2\alpha c}}\right] . \quad (3.107)$$

This impedance may be normalized by dividing by the magnitude of the air impedance, given in Eq. (3.55). A computer program (BTNCO) designed to calculate the normalized impedance for this case is given by Luquire *et al.*[25]

[25] J. W. Luquire, C. V. Dodd, W. E. Deeds, and W. G. Spoeri, Computer Programs for Some Eddy Current Problems, ORNL-TM-2501 (in preparation).

E. Coil Encircling a Two-Conductor Rod

We shall assume a delta function coil encircling an infinitely long, two-conductor rod, as shown in Fig. 11.

1. General Derivation

The general differential equation is the same as Eq. (3.3) for a coil above a conducting plane. If we neglect the displacement current term, we have

$$\frac{1}{R(r)}\frac{\partial^2 R(r)}{\partial r^2} + \frac{1}{rR(r)}\frac{\partial R(r)}{\partial r} + \frac{1}{Z(z)}\frac{\partial^2 Z(z)}{\partial z^2} - \frac{1}{r^2} - j\omega\mu\sigma = 0 \ . \tag{3.108}$$

Now, however, we shall assume the separation constant to be negative:

$$\frac{1}{Z(z)}\frac{\partial^2 Z(z)}{\partial z^2} = \text{"constant"} = -\alpha^2 \ . \tag{3.109}$$

Then

$$Z(z) = F \sin\alpha(z-z_0) + G \cos\alpha(z-z_0) \ , \tag{3.110}$$

and Eq. (3.108) becomes

$$r^2 \frac{\partial^2 R(r)}{\partial r^2} + \frac{r\partial R(r)}{\partial r} - [(\alpha^2 + j\omega\mu\sigma_i)r^2 + 1]\ R(r) = 0 \ . \tag{3.111}$$

The solution to Eq. (3.111) in terms of modified Bessel functions is

$$R(r) = CI_1[(\alpha^2 + j\omega\mu\sigma_i)^{\frac{1}{2}}r] + DK_1[(\alpha^2 + j\omega\mu\sigma_i)^{\frac{1}{2}}r] \ . \tag{3.112}$$

We can now write the vector potential in each region. We shall use the fact that it is symmetric (with respect to $z-z_0$) to eliminate the sine terms and the fact that $K_1(0)$ and $I_1(\infty)$ both diverge to

ORNL-DWG 67-2524

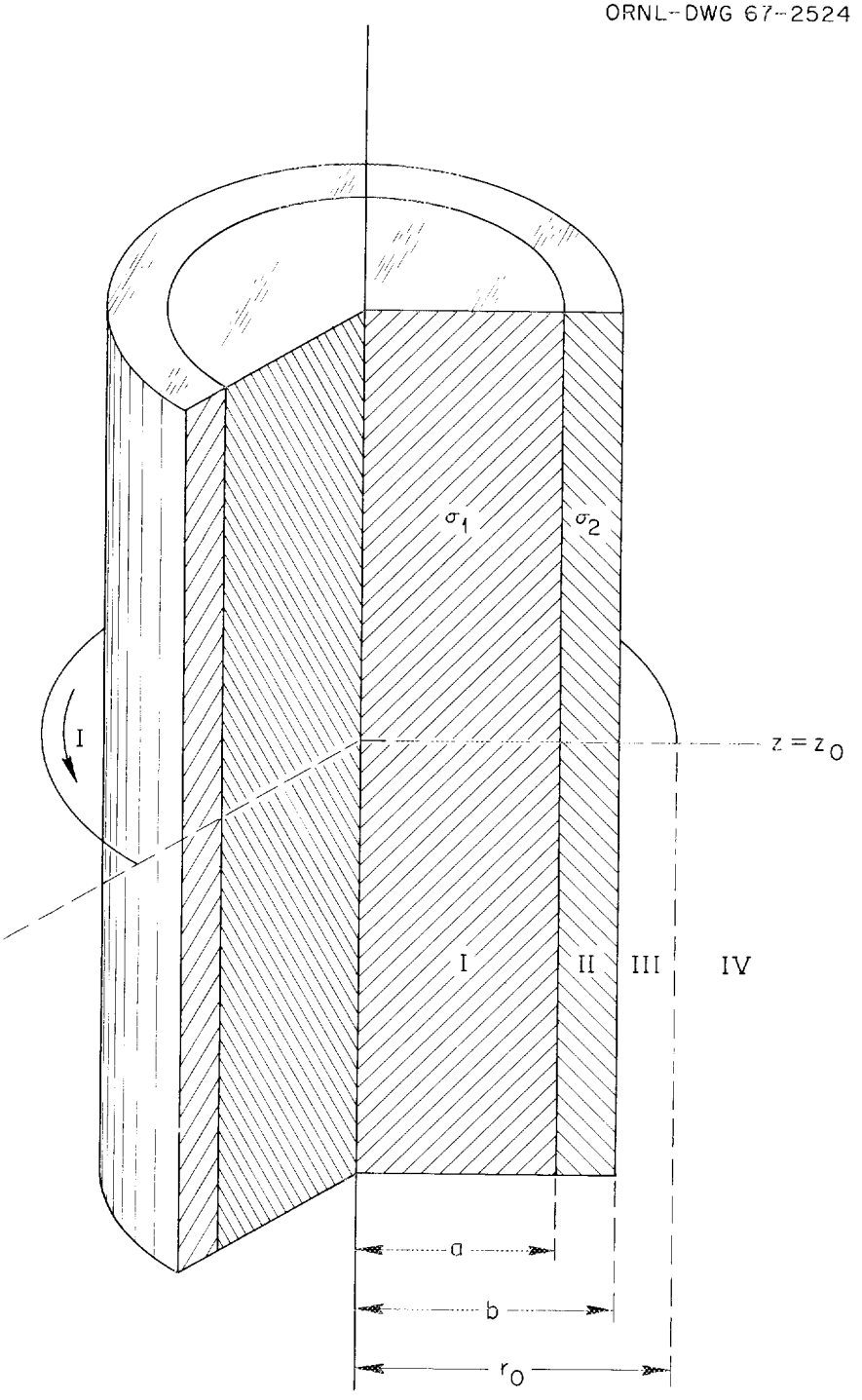

Fig. 11. Delta Function Coil Encircling a Two-Conductor Rod.

eliminate their coefficients in regions I and IV, respectively. Thus we have

$$A^{(1)}(r,z) = \int_0^\infty C_1(\alpha) I_1[(\alpha^2 + j\omega\mu\sigma_1)^{\frac{1}{2}} r] \cos\alpha(z-z_0)\, d\alpha \ , \tag{3.113}$$

$$A^{(2)}(r,z) = \int_0^\infty \{C_2(\alpha) I_1[(\alpha^2 + j\omega\mu\sigma_2)^{\frac{1}{2}} r] + D_2(\alpha) K_1[(\alpha^2 + j\omega\mu\sigma_2)^{\frac{1}{2}} r]\} \cos\alpha(z-z_0)\, d\alpha \ , \tag{3.114}$$

$$A^{(3)}(r,z) = \int_0^\infty [C_3(\alpha) I_1(\alpha r) + D_3(\alpha) K_1(\alpha r)] \cos\alpha(z-z_0)\, d\alpha \ , \tag{3.115}$$

$$A^{(4)}(r,z) = \int_0^\infty D_4(\alpha) K_1(\alpha r) \cos\alpha(z-z_0)\, d\alpha \ . \tag{3.116}$$

The boundary conditions between the different regions are

$$A^{(1)}(a,z) = A^{(2)}(a,z) \ , \tag{3.117}$$

$$\frac{1}{\mu_1} \frac{\partial}{\partial r} A^{(1)}(r,z)\Big]_{r=a} = \frac{1}{\mu_2} \frac{\partial A^{(2)}}{\partial r}(r,z)\Big]_{r=a} \ , \tag{3.118}$$

$$A^{(2)}(b,z) = A^{(3)}(b,z) \ , \tag{3.119}$$

$$\frac{1}{\mu_2} \frac{\partial A^{(2)}}{\partial r}(r,z)\Big]_{r=b} = \frac{1}{\mu_0} \frac{\partial A^{(3)}}{\partial r}(r,z)\Big]_{r=b} \ , \tag{3.120}$$

$$A^{(3)}(r_0,z) = A^{(4)}(r_0,z) \ , \tag{3.121}$$

$$\frac{\partial A^{(3)}}{\partial r}(r,z)\Big]_{r=r_0} = \frac{\partial}{\partial r} A^{(4)}(r,z)\Big]_{r=r_0} \ . \tag{3.122}$$

If we multiply both sides of Eq. (3.117) by $\cos\alpha'(z-z_0)$ and integrate from zero to infinity, we obtain

$$\int_0^\infty \int_0^\infty C_1(\alpha) I_1[(\alpha^2 + j\omega\mu\sigma_1)^{\frac{1}{2}} r] \cos\alpha(z-z_0) \cos\alpha'(z-z_0)\, d\alpha\, d(z-z_0)$$

$$= \int_0^\infty \int_0^\infty \{C_2(\alpha) I_1[(\alpha^2 + j\omega\mu\sigma_2)^{\frac{1}{2}} r] + D_2(\alpha) K_1[(\alpha^2 + j\omega\mu\sigma_2)^{\frac{1}{2}} r)]\}$$

$$\times [\cos\alpha(z-z_0) \cos\alpha'(z-z_0)]\, d\alpha\, d(z-z_0) \ . \qquad (3.123)$$

We can reverse the order of integration and use the orthogonality properties of the cosine integral or use the Fourier integral theorem

$$\frac{1}{\pi} \int_0^\infty f(\alpha) [\int_0^\infty \cos\alpha(z-z_0) \cos\alpha'(z-z_0)\, d(z-z_0)]\, d\alpha = f(\alpha') \ . \qquad (3.124)$$

Thus, we can solve the integral Eqs. (3.117) through (3.122). We shall use α_i to designate $(\alpha^2 + j\omega\mu\sigma_i)^{\frac{1}{2}}$ and β_i to designate $\frac{\mu_0}{\mu_i}\alpha_i$. We shall use primes to designate derivatives with respect to the argument. We get from the integral Eqs. (3.117) through (3.122)

$$C_1 I_1(\alpha_1 a) = C_2 I_1(\alpha_2 a) + D_2 K_1(\alpha_2 a) \ , \qquad (3.125)$$

$$C_1 \beta_1 I_1'(\alpha_1 a) = C_2 \beta_2 I_1'(\alpha_2 a) + D_2 \beta_2 K_1'(\alpha_2 a) \ , \qquad (3.126)$$

$$C_2 I_1(\alpha_1 b) + D_2 K_1(\alpha_2 b) = C_3 I_1(\alpha b) + D_3 K_1(\alpha b) \ , \qquad (3.127)$$

$$C_2 \beta_2 I_1'(\alpha_2 b) + D_2 \beta_2 K_1'(\alpha_2 b) = C_3 \alpha I_1'(\alpha b) + D_3 \alpha K_1'(\alpha b) \ , \qquad (3.128)$$

$$C_3 I_1(\alpha r_0) + D_3 K_1(\alpha r_0) = D_4 K_1(\alpha r_0) \ , \qquad (3.129)$$

$$C_3 \alpha I_1'(\alpha r_0) + D_3 \alpha K_1'(\alpha r_0) = D_4 \alpha K_1'(\alpha r_0) + \frac{\mu I}{\pi} \ . \qquad (3.130)$$

We now have six equations with six unknown constants. The equations may be solved to give the constants. We shall make the following definitions:

$$D(\alpha) \equiv [\alpha K_1'(\alpha b)K_1(\alpha_2 b) - \beta_2 K_1'(\alpha_2 b)K_1(\alpha b)][\beta_1 I_1(\alpha_2 a)I'(\alpha_1 a)$$

$$- \beta_2 I_1(\alpha_1 a)I_1'(\alpha_2 a)] + [\beta_1 K_1(\alpha_2 a)I_1'(\alpha_1 a) - \beta_2 K_1'(\alpha_2 a)I_1(\alpha_1 a)]$$

$$\times [\beta_2 I_1'(\alpha_2 b)K_1(\alpha b) - \alpha I_1(\alpha_2 b)K_1'(\alpha b)] \ , \quad (3.131)$$

and

$$S(\alpha) \equiv \frac{1}{bD(\alpha)K_1(\alpha b)} \Big\{ K_1(\alpha_2 b)[\beta_2 I_1(\alpha_1 a)I_1'(\alpha_2 a) - \beta_1 I_1(\alpha_2 a)I_1'(\alpha_1 a)]$$

$$+ I(\alpha_2 b)[\beta_1 K_1(\alpha_2 a)I_1'(\alpha_1 a) - \beta_2 K_1'(\alpha_2 a)I_1(\alpha_1 a)] - bD(\alpha)I_1(\alpha b)\Big\} \ . \quad (3.132)$$

The constants can then be written as

$$C_1 = \frac{\mu r_0 I K_1(\alpha r_0)}{ab\pi D(\alpha)} \ , \quad (3.133)$$

$$D_2 = \frac{\mu r_0 I K_1(\alpha r_0)}{b\pi D(\alpha)} [\beta_2 I_1(\alpha_1 a)I_1'(\alpha_2 a) - \beta_1 I_1(\alpha_2 a)I_1'(\alpha_1 a)] \ , \quad (3.134)$$

$$C_2 = \frac{\mu I r_0 K_1(\alpha r_0)}{b\pi D(\alpha)} [\beta_1 K_1(\alpha_2 a)I_1'(\alpha_1 a) - \beta_2 K_1'(\alpha_2 a)I_1(\alpha_1 a)] \ , \quad (3.135)$$

$$C_3 = \frac{\mu I r_0 K_1(\alpha r_0)}{\pi} \ , \quad (3.136)$$

$$D_3 = \frac{\mu I r_0 K_1(\alpha r_0)S(\alpha)}{\pi} \ , \quad (3.137)$$

$$D_4 = \frac{\mu I r_0}{\pi} [K_1(\alpha r_0)S(\alpha) + I_1(\alpha r_0)] \ . \quad (3.138)$$

We can now write for the vector potential in each region

$$A^{(1)}(r,z) = \frac{\mu I}{\pi} \int_0^\infty \frac{r_0}{ab} \frac{K_1(\alpha r_0)}{D(\alpha)} I_1(\alpha_1 r) \cos\alpha(z-z_0) \ , \tag{3.139}$$

$$A^{(2)}(r,z) = \frac{\mu I}{\pi} \int_0^\infty \frac{r_0 K_1(\alpha r_0)}{bD(\alpha)} \Big\{[\beta_2 I_1(\alpha_1 a)\ I_1'(\alpha_2 a) - \beta_1 I_1(\alpha_2 a) I_1'(\alpha_1 a)]\ K_1(\alpha_2 r)$$

$$+ [\beta_1 K_1(\alpha_2 a) I_1'(\alpha_1 a) - \beta_2 K_1'(\alpha_2 a) I_1(\alpha_1 a)] I_1(\alpha_2 r)\Big\} \cos\alpha(z-z_0)\ d\alpha \ , \tag{3.140}$$

$$A^{(3)}(r,z) = \frac{\mu I}{\pi} \int_0^\infty r_0 K_1(\alpha r_0)\{I_1(\alpha r) + S(\alpha) K_1(\alpha r)\} \cos\alpha(z-z_0)\ d\alpha \ , \tag{3.141}$$

and

$$A^{(4)}(r,z) = \frac{\mu I}{\pi} \int_0^\infty r_0 K_1(\alpha r_0)\{K_1(\alpha r_0) S(\alpha) + I_1(\alpha r_0)\} \cos\alpha(z-z_0)\ d\alpha \ . \tag{3.142}$$

These are the equations for a delta function coil encircling a two-conductor rod. We shall now superimpose these solutions to form a coil with rectangular cross section as shown in Fig. 12. This involves substituting Eqs. (3.139) through (3.142) into Eq. (2.5) and performing the integration over the dimensions of the coil. We make the following definitions:

$$\int_{r_0 = r_1}^{r_2} r_0 K_1(\alpha r_0) dr_0 = \frac{1}{\alpha^2} \int_{\alpha r_0 = \alpha r_1}^{\alpha r_2} \alpha r_0 K_1(\alpha r_0) d\alpha r_0 = \frac{1}{\alpha^2} \int_{x = \alpha r_1}^{\alpha r_2} x K_1(x) dx \equiv \frac{1}{\alpha^2} K(r_2, r_1) \tag{3.143}$$

and similarly

$$\int_{r_1}^{r_2} r_0 I_1(\alpha r_0)\ dr_0 \equiv \frac{1}{\alpha^2} I(r_2, r_1) \ . \tag{3.144}$$

ORNL-DWG 67-2525R

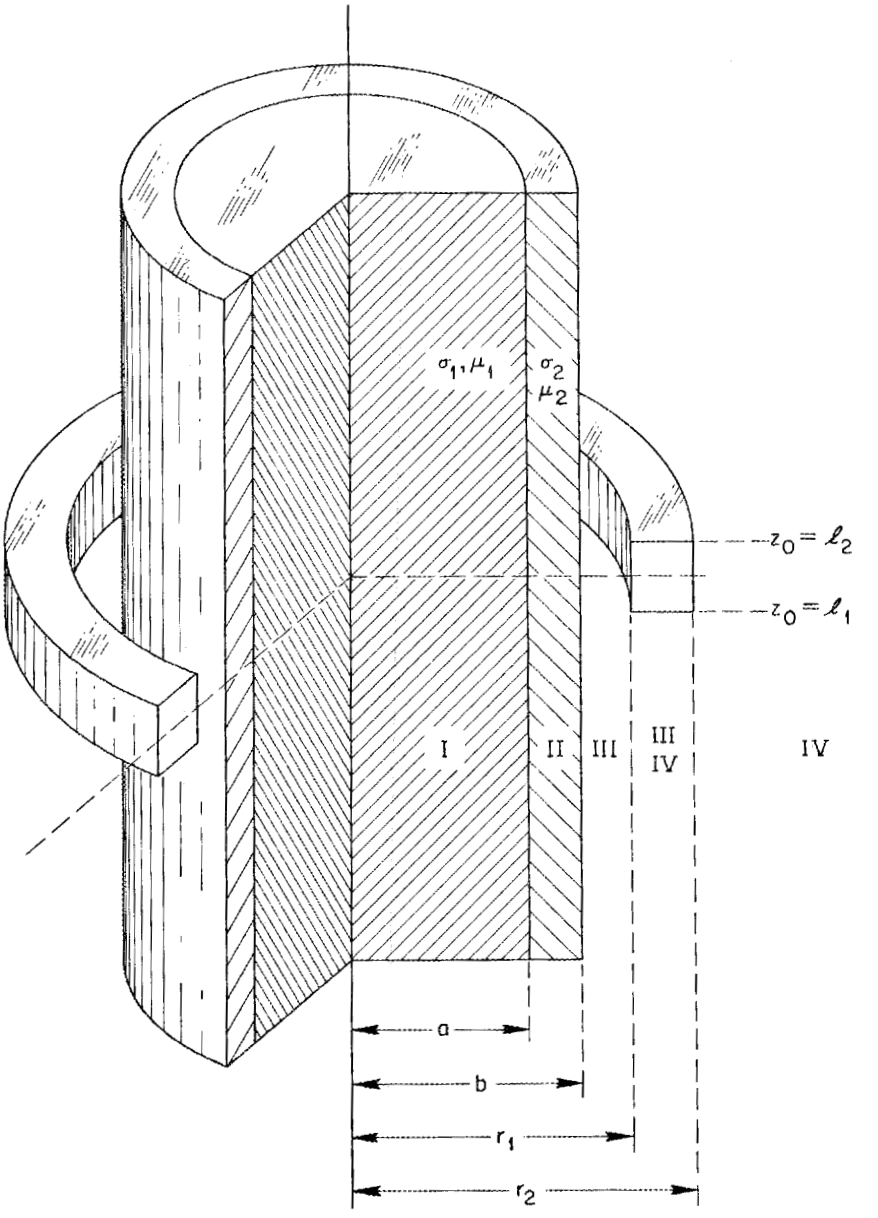

Fig. 12. A Coil of Rectangular Cross Section Encircling a Two-Conductor Rod.

We then get for the vector potential produced in the different regions by a coil of rectangular cross section

$$A^{(1)}(r,z) = \frac{\mu IN}{\pi} \int_0^\infty \frac{I_1(\alpha_1 r)}{\alpha^3 abD(\alpha)} K(r_2,r_1)[\sin\alpha(z-\ell_1) - \sin\alpha(z-\ell_2)]\, d\alpha \ , \quad (3.145)$$

$$A^{(2)}(r,z) = \frac{\mu IN}{\pi}\int_0^\infty \frac{K(r_2,r_1)}{\alpha^3 bD(\alpha)}\Big\{K_1(\alpha_2 r)[\beta_2 I_1(\alpha_1 a)I_1'(\alpha_2 a) - \beta_1 I_1(\alpha_2 a)I_1'(\alpha_1 a)]$$

$$+ I_1(\alpha_2 r)[\beta_1 K_1(\alpha_2 a)I_1'(\alpha_1 a) - \beta_2 K_1'(\alpha_2 a)I_1(\alpha_1 a)]\Big\}$$

$$\times [\sin\alpha(z-\ell_1) - \sin\alpha(z-\ell_2)]\, d\alpha\ , \quad (3.146)$$

$$A^{(3)} = \frac{\mu IN}{\pi}\int_0^\infty \frac{K(r_2,r_1)}{\alpha^3}\Big\{I_1(\alpha r) + S(\alpha)K_1(\alpha r)\Big\}[\sin\alpha(z-\ell_1) - \sin\alpha(z-\ell_2)]\, d\alpha\ ,$$

$$(3.147)$$

$$A^{(4)} = \frac{\mu IN}{\pi}\int_0^\infty \frac{K_1(\alpha r)}{\alpha^3}\Big\{K(r_2,r_1)S(\alpha) + I(r_2,r_1)\Big\}[\sin\alpha(z-\ell_1) - \sin\alpha(z-\ell_2)]\, d\alpha\ .$$

$$(3.148)$$

In the region of the coil, between regions III and IV, we have

$$A^{(3,4)}(r,z) = NI\int_{z_0=\ell_1}^{\ell_2}\Big\{\int_{r_0=r_1}^{r}\frac{A_0^{(4)}(r,z,r_0,z_0)}{i_0}\,dr_0 + \int_{r_0=r}^{r_2}\frac{A_0^{(3)}(r,z,r_0,z_0)}{i_0}\,dr_0\Big\}\,dz_0$$

$$(3.149)$$

or

$$A^{(3,4)}(r,z) = \frac{\mu IN}{\pi}\int_0^\infty \frac{1}{\alpha^3}\Big\{K_1(\alpha r)K(r_2,r_1)S(\alpha) + K_1(\alpha r)I(r,r_1) + K(r_2,r)I_1(\alpha r)\Big\}$$

$$\times [\sin\alpha(z-\ell_1) - \sin\alpha(z-\ell_2)]\, d\alpha\ . \quad (3.150)$$

It is theoretically possible to evaluate $A^{(3,4)}$ and its integrals over r and z. However, the integrals

$$\int_{r_1}^{r_2} rK_1(\alpha r)I(r,r_1)dr \text{ and } \int_{r_1}^{r_2} rK(r_2,r)I_1(\alpha r)dr$$

would require a very difficult numerical evaluation, and it is possible to obtain these in terms of a previously defined function. Eason et al.[26] have shown that

$$\pi/2 \int_0^\infty J_1(\alpha r_0)J_1(\alpha r)\ e^{-\alpha(z-z_0)}\ d\alpha = \int_0^\infty K_1(\alpha r_0)I_1(\alpha r)\ \cos\alpha(z-z_0)\ d\alpha\ . \qquad (3.151)$$

We must have $z-z_0 > 0$ and $r_0 > r$ in the above equation if it is to remain finite. To do this we break the solution into two regions, using the ones that remain finite in their respective regions. We then multiply by $r_0 dr_0 dz_0$ and integrate over the cross section of the coil. We get

$$\pi/2 \int_0^\infty \frac{1}{\alpha^3}\ J(r_2,r_1)J_1(\alpha r)\left(2 - e^{\alpha(z-\ell_2)} - e^{-\alpha(z-\ell_1)}\right) d\alpha = \int_0^\infty \frac{1}{\alpha^3}\ [I(r,r_1)K_1(\alpha r)$$

$$+ K(r_2,r)I_1(\alpha r)][\sin\alpha(z-\ell_1) - \sin\alpha(z-\ell_2)]\ d\alpha. \quad (3.152)$$

By using this result in Eq. (3.150) we can write

$$A^{(3,4)}(r,z) = \frac{\mu IN}{\pi}\int_0^\infty \frac{1}{\alpha^3}\left\{K_1(\alpha r)S(\alpha)K(r_2,r_1)[\sin\alpha(z-\ell_1) - \sin\alpha(z-\ell_2)]\right.$$

$$\left. + \frac{\pi}{2}\ J(r_2,r_1)J_1(\alpha r)\left(2 - e^{\alpha(z-\ell_2)} - e^{-\alpha(z-\ell_1)}\right)\right\} d\alpha\ . \quad (3.153)$$

Thus, we have obtained the vector potential for a coil of rectangular cross section in terms of an integral of somewhat simpler functions.

---

[26] G. Eason, B. Noble, and I. N. Sneddon, Phil. Trans. Roy. Soc. (London) Ser. A 247, 529 (1955).

2. Impedance of a Coil Encircling a Two-Conductor Rod

To calculate the coil impedance, we substitute the equation for the vector potential at the coil, $A^{(3,4)}(r,z)$ into Eq. (2.18) and perform the integration over the dimensions of the coil:

$$Z = \frac{j2\omega n^2\mu}{(\ell_2-\ell_1)^2(r_2-r_1)^2}\int_0^\infty \frac{1}{\alpha^6}\left\{2K^2(r_2,r_1)S(\alpha)[1-\cos\alpha(\ell_2-\ell_1)]\right.$$

$$\left. + \pi J^2(r_2,r_1)[\alpha(\ell_2-\ell_1) - 1 + e^{-\alpha(\ell_2-\ell_1)}]\right\} d\alpha \ . \qquad (3.154)$$

Normalization with respect to $\bar{r}$ gives

$$Z = \frac{j2\omega n^2\mu\bar{r}}{(\ell_2-\ell_1)^2(r_2-r_1)^2}\int_0^\infty \frac{1}{\alpha^6}\left\{4K^2(r_2,r_1)S(\alpha)\ \sin^2\left[\frac{\alpha}{2}\ (\ell_2-\ell_1)\right]\right.$$

$$\left. + \pi J^2(r_2,r_1)[\alpha(\ell_2-\ell_1) - 1 + e^{-\alpha(\ell_2-\ell_1)}]\right\} d\alpha \ . \qquad (3.155)$$

A computer program (ENCCO5) performs this rather difficult integration.[27]

3. Defects in the Outer Material

We can write the equation for the impedance change due to a current defect in region II by putting the vector potential for region II into Eq. (2.28). If we normalize the dimensions by $\bar{r}$ and the impedance by the air impedance, then

[27] J. W. Luquire, C. V. Dodd, W. E. Deeds, and W. G. Spoeri, Computer Programs for Some Eddy Current Problems, ORNL-TM-2501 (in preparation).

$$Z_n' = \frac{3}{4\pi^3}(\omega\mu\sigma_2\bar{r}^2)\ \mathrm{Vol}\ \alpha_{22}\left\{\int_0^\infty \frac{K(r_2,r_1)}{\alpha^3 bD(\alpha)}\left\{K_1(\alpha_2 r)[\beta_2 I_1(\alpha_1 a)I_1'(\alpha_2 a)\right.\right.$$

$$\left. - \beta_1 I_1(\alpha_2 a)I_1'(\alpha_1 a)] + I_1(\alpha_2 r)[\beta_1 K_1(\alpha_2 a)I_1'(\alpha_1 a) - \beta_2 K_1'(\alpha_2 a)I_1(\alpha_1 a)]\right\}$$

$$\left.[\sin\alpha(z-\ell_1) - \sin\alpha(z-\ell_2)]\ d\alpha\right\} + \int_0^\infty \frac{1}{\alpha^6} J^2(r_2,r_1)[\alpha(\ell_2-\ell_1)$$

$$+ e^{-\alpha(\ell_2-\ell_1)} - 1]\ d\alpha\ , \qquad (3.156)$$

from which we easily obtain the defect sensitivity factor since

$$\text{defect sensitivity factor} = \frac{Z_n'}{\mathrm{Vol}\ \alpha_{22}}\ . \qquad (3.157)$$

Luquire et al.[27] give a program (ENDFT5) designed to calculate the defect sensitivity factor due to a single defect in the outer conductor. In the same work is a program (ENDFTL) designed to calculate the defect sensitivity factor for a defect located at successive points of a lattice of positions in the outer conductor.

4. Defects in the Inner Material

Substitution of Eq. (3.145) into Eq. (2.28) yields the normalized impedance change due to a defect in region I:

$$Z_n' = \frac{3}{4\pi^3}(\omega\mu\sigma_1\bar{r}^2)\ \mathrm{Vol}\ \alpha_{22}\left\{\int_0^\infty \frac{K(r_2,r_1)I_1(\alpha_1 r)}{\alpha^3 abD(\alpha)}[\sin\alpha(z-\ell_1) - \sin\alpha(z-\ell_2)]\ \alpha d\alpha\right\}^2$$

$$+ \int_0^\infty \frac{1}{\alpha^6} J^2(r_2,r_1)[\alpha(\ell_2-\ell_1) + e^{-\alpha(\ell_2-\ell_1)} - 1]\ d\alpha\ . \qquad (3.158)$$

A program (ENDFB5) designed to calculate the defect sensitivity factor for this case is also given by Luquire et al.[27]

5. Differential Coil System

A differential coil system, as shown in Fig. 13, is frequently used in the inspection of tubes. This coil arrangement is used both with the coils encircling a rod or tube and with the coils positioned inside a tube. The coils are usually connected in a bridge arrangement, as shown in Fig. 14. We shall assume that the two coils are identical and are driven by currents I_1 and I_2. The total voltage induced in coil 1 is

$$V_1(\text{total}) = I_1 Z_{11} + I_2 M_{12} + I_1 Z_{1d} + I_2 M_{12d} \tag{3.159}$$

where

Z_{11} is the self-impedance in the presence of metal but not the defect,
M_{12} is the mutual coupling between the two coils,
Z_{1d} is the defect impedance due to a current in coil 1,
M_{12d} is the mutual coupling between coils 1 and 2 due to the flaw.

For current defects and spherical magnetic defects, we have

$$Z_{1d} = \frac{3}{2} V \left\{ \sigma\omega^2 \left(\frac{A_1}{I_1}\right)^2 \alpha_{22} - j \frac{\omega}{\mu} \left[\frac{1}{I_1^2} \left(\frac{\partial A_1}{\partial z}\right)^2 \beta_{11} + \frac{1}{I_1^2 r^2} \left(\frac{\partial (rA_1)}{\partial r}\right)^2 \beta_{33} \right] \right\} \tag{3.160}$$

and

$$M_{12d} = \frac{3}{2} V \left\{ \sigma\omega^2 \frac{A_1}{I_1} \cdot \frac{A_2}{I_2} \alpha_{22} - j \frac{\omega}{\mu} \left[\frac{1}{I_1 I_2} \frac{\partial A_1}{\partial z} \frac{\partial A_2}{\partial z} \beta_{11} + \frac{1}{I_1 I_2 r^2} \frac{\partial (rA_1)}{\partial r} \frac{\partial (rA_2)}{\partial r} \beta_{33} \right] \right\} : \tag{3.161}$$

We also have a similar equation for $V_2(\text{total})$:

$$V_2(\text{total}) = I_2 Z_{22} + I_1 M_{21} + I_2 Z_{2d} + I_1 M_{21d} \cdot \tag{3.162}$$

ORNL-DWG 67-2525R2

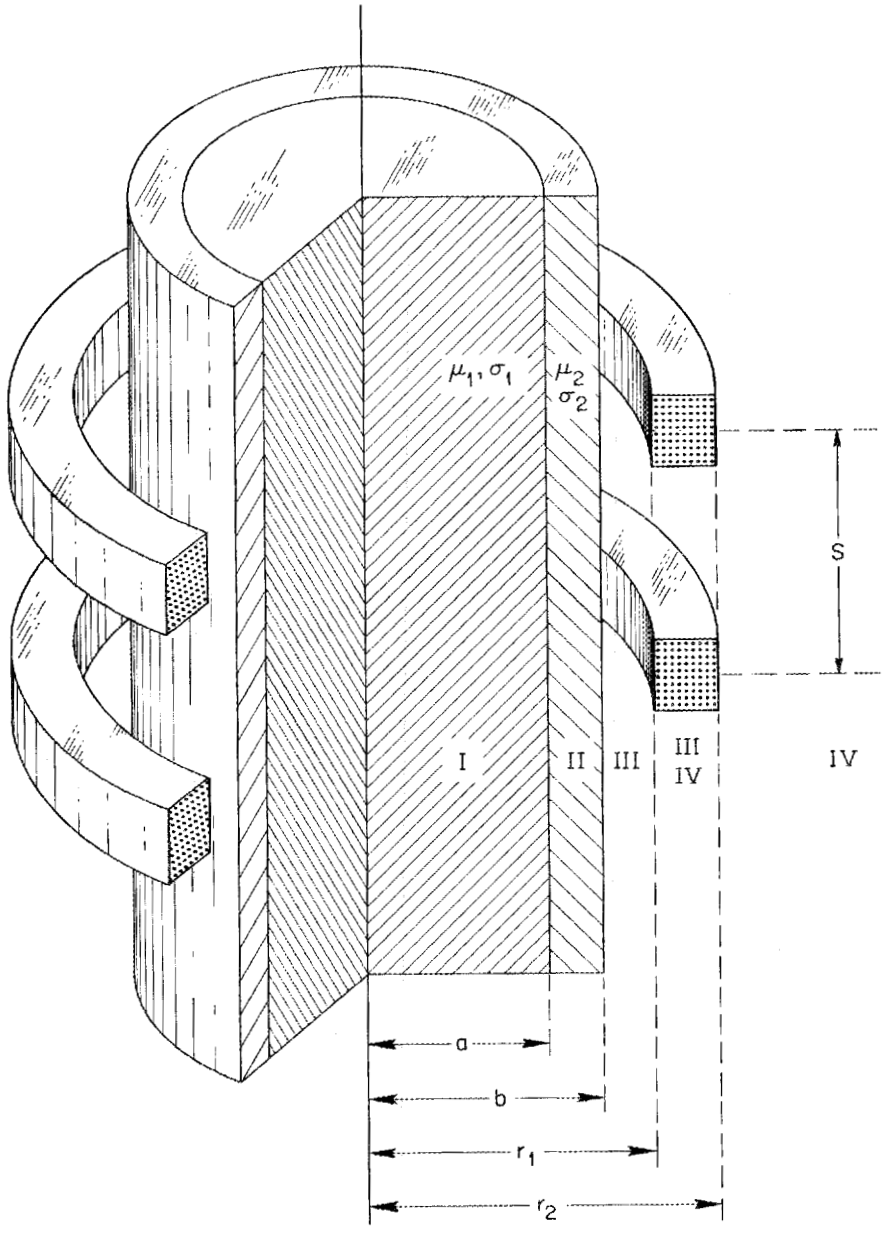

Fig. 13. A Differential Encircling Coil System.

ORNL-DWG 68-10308

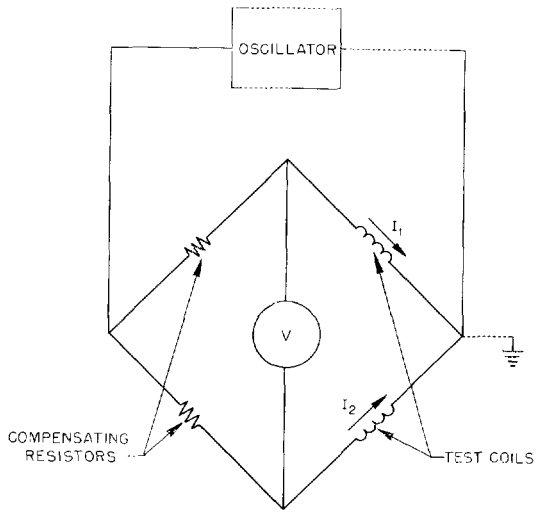

Fig. 14. A Bridge Arrangement Used with Differential Coils.

Now $M_{12} = M_{21}$ and $M_{12d} = M_{21d}$ in general, and, since we defined the two coils to be identical, $Z_{11} = Z_{22}$. Therefore, the voltage difference is

$$V_D = Z_{11}\,(I_1-I_2) + M_{12}\,(I_1-I_2) + M_{12d}\,(I_1-I_2) + Z_{1d}I_1 - Z_{2d}I_2\ . \qquad (3.163)$$

The circuit is generally operated near null, so that I_1-I_2 is very small. Since M_{12d} is also small, this term can usually be neglected. The voltage difference due to a defect then becomes

$$V_{Dd} = Z_{1d}I_1 - Z_{2d}I_2 \approx (Z_{1d} - Z_{2d})I_1\ . \qquad (3.164)$$

Now if we take s as the center-to-center spacing between the coils, we have

$$Z_{2d}\,(r,z) = Z_{1d}(r,z-s)\ . \qquad (3.165)$$

Furthermore, if we have only current defects we can write for the voltage difference

$$V_{Dd} = \left\{\frac{3}{2}\,\sigma\omega^2 \left[\left(\frac{A_1(r,z)}{I_1}\right)^2 - \left(\frac{A_1(r,z-s)}{I_1}\right)^2\right]\right\} \alpha_{22}\ \mathrm{Vol}\ I_1\ . \tag{3.166}$$

The term in the braces can be called the differential defect sensitivity factor and is obtained by subtracting one defect sensitivity factor from the other. We have presented elsewhere[27] a program (READIN) designed to calculate the differential defect sensitivity factor for a defect at points on a lattice from a lattice of values of the defect sensitivity factor.

F. Coil inside a Two-Conductor Tube

A delta function coil inside a two-conductor tube is shown in Fig. 15.

1. General Derivation

We can start with the same general equation, Eq. (3.112), in terms of modified Bessel functions that we used for a coil encircling a two-conductor tube and write the vector potential in each region. Again, we can drop the sine terms and the coefficients of $K_1(0)$ and $I_1(\infty)$. We then have for the vector potential in each region

$$A^{(1)}(r,z) = \int_0^\infty C_1(\alpha) I_1(\alpha r)\ \cos\alpha(z-z_0)\ d\alpha\ , \tag{3.167}$$

$$A^{(2)}(r,z) = \int_0^\infty [C_2(\alpha) I_1(\alpha r) + D_2(\alpha) K_1(\alpha r)]\ \cos\alpha(z-z_0)\ d\alpha\ , \tag{3.168}$$

$$A^{(3)}(r,z) = \int_0^\infty [C_3(\alpha) I_1(\alpha_1 r) + D_3(\alpha) K_1(\alpha_1 r)]\ \cos\alpha(z-z_0)\ d\alpha\ , \tag{3.169}$$

$$A^{(4)}(r,z) = \int_0^\infty D_4(\alpha) K_1(\alpha_2 r)\ \cos\alpha(z-z_0)\ d\alpha\ . \tag{3.170}$$

The boundary conditions for a delta function coil at (r_0, z_0) are

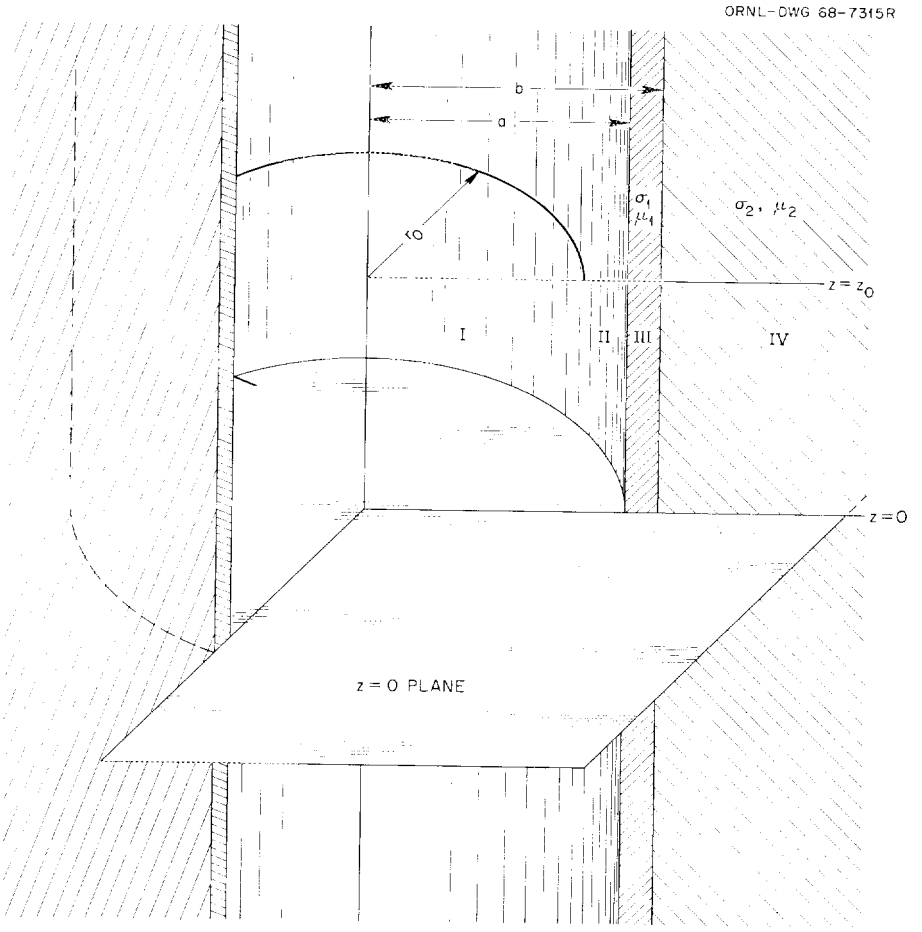

Fig. 15. A Delta Function Coil inside a Two-Conductor Tube.

$$A^{(1)}(r_0,z) = A^{(2)}(r_0,z) \ , \tag{3.171}$$

$$\left.\frac{\partial A^{(1)}(r,z)}{\partial r}\right]_{r=r_0} = \left.\frac{\partial A^{(2)}(r,z)}{\partial r}\right]_{r=r_0} + \mu I \delta(z-z_0) \ , \tag{3.172}$$

$$A^{(2)}(a,z) = A^{(3)}(a,z) \ , \tag{3.173}$$

$$\left.\frac{\partial A^{(2)}(r,z)}{\partial r}\right]_{r=a} = \frac{1}{\mu_1} \left.\frac{\partial A^{(3)}(r,z)}{\partial r}\right]_{r=a} \tag{3.174}$$

$$A^{(3)}(b,z) = A^{(4)}(b,z) \ , \tag{3.175}$$

$$\frac{1}{\mu_1}\frac{\partial A^{(3)}(r,z)}{\partial r}\Bigg]_{r=b} = \frac{1}{\mu_2}\frac{\partial A^{(4)}(r,z)}{\partial r}\Bigg]_{r=b} . \tag{3.176}$$

We shall first substitute Eqs. (3.167) through Eqs. (3.170) into these six equations, again multiply both sides by $\int_0^\infty \cos\alpha'(z-z_0)\, d(z-z_0)$, reverse the order of integration, and use the orthogonality properties of the cosine integral. We then obtain

$$C_1 I_1(\alpha r_0) = C_2 I_1(\alpha r_0) + D_2 K_1(\alpha r_0) , \tag{3.177}$$

$$\alpha C_1 I_1'(\alpha r_0) = \alpha C_2 I_1'(\alpha r_0) + \alpha D_2 K_1'(\alpha r_0) + \frac{\mu I}{\pi} , \tag{3.178}$$

$$C_2 I_1(\alpha a) + D_2 K_1(\alpha a) = C_3 I_1(\alpha_1 a) + D_3 K_1(\alpha_1 a) , \tag{3.179}$$

$$\alpha C_2 I_1'(\alpha a) + \alpha D_2 K_1'(\alpha a) = \beta_1 C_3 I_1'(\alpha_1 a) + \beta_1 D_3 K_1'(\alpha_1 a) , \tag{3.180}$$

$$C_3 I_1(\alpha_1 b) + D_3 K_1(\alpha_1 b) = D_4 K_1(\alpha_2 b) , \tag{3.181}$$

$$\beta_1 C_3 I_1'(\alpha_1 b) + \beta_1 D_3 K_1'(\alpha_1 b) = \beta_2 D_4 K_1'(\alpha_2 b) . \tag{3.182}$$

We now have six equations with six unknown constants. We shall make the following definitions:

$$\begin{aligned} D(\alpha) \equiv\ & [\beta_1 K_1'(\alpha_1 b) K_1(\alpha_2 b) - \beta_2 K_1'(\alpha_1 b) K_1(\alpha_1 b)][\alpha I_1(\alpha_1 a) I_1'(\alpha a) \\ & - \beta_1 I_1'(\alpha_1 a) I_1(\alpha a)] + [\alpha K_1(\alpha_1 a) I'(\alpha a) - \beta_1 K_1'(\alpha_1 a) I_1(\alpha a)] \\ & \times [\beta_2 K_1'(\alpha_2 b) I_1(\alpha_1 b) - \beta_1 I_1'(\alpha_1 b) K_1(\alpha_2 b)] , \end{aligned} \tag{3.183}$$

$$S(\alpha) = \frac{1}{I_1(\alpha a)} \left\{ \frac{I_1(\alpha_1 a)}{aD(\alpha)} [\beta_1 K_1'(\alpha_1 b) K_1(\alpha_2 b) - \beta_2 K_1'(\alpha_2 b) K_1(\alpha_1 b)] \right.$$

$$\left. + \frac{K_1(\alpha_1 a)}{aD(\alpha)} [\beta_2 K_1'(\alpha_2 b) I_1(\alpha_1 b) - \beta_1 I_1'(\alpha_1 b) K_1(\alpha_2 b)] - K_1(\alpha a) \right\} . \quad (3.184)$$

Then the constants can be written as

$$C_1(\alpha) = \frac{\mu I r_0}{\pi} \left\{ I_1(\alpha r_0) S(\alpha) + K_1(\alpha r_0) \right\} , \quad (3.185)$$

$$C_2(\alpha) = \frac{\mu I r_0 I_1(\alpha r_0)}{\pi} S(\alpha) , \quad (3.186)$$

$$D_2(\alpha) = \frac{\mu I r_0 I_1(\alpha r_0)}{\pi} , \quad (3.187)$$

$$C_3(\alpha) = \frac{\mu I r_0 I_1(\alpha r_0)}{\pi a D(\alpha)} [\beta_1 K_1'(\alpha_1 b) K_1(\alpha_2 b) - \beta_2 K_1'(\alpha_2 b) K_1(\alpha_1 b)] , \quad (3.188)$$

$$D_3(\alpha) = \frac{\mu I r_0 I_1(\alpha r_0)}{\pi a D(\alpha)} [\beta_2 K_1'(\alpha_2 b) I_1(\alpha_1 b) - \beta_1 I_1'(\alpha_1 b) K_1(\alpha_2 b)] , \quad (3.189)$$

$$D_4(\alpha) = - \frac{\mu I r_0 I_1(\alpha r_0)}{\pi a b \mu_1 D(\alpha)} . \quad (3.190)$$

We shall now substitute these constants into their respective equations to obtain the vector potential in each region due to a delta function coil:

$$A^{(1)}(r,z) = \frac{\mu I}{\pi} \int_0^\infty r_0 I_1(\alpha r) \left\{ I_1(\alpha r_0) S(\alpha) + K_1(\alpha r_0) \right\} \cos\alpha(z-z_0) \, d\alpha , \quad (3.191)$$

$$A^{(2)}(r,z) = \frac{\mu I}{\pi} \int_0^\infty r_0 I_1(\alpha r_0) \left\{ I_1(\alpha r) S(\alpha) + K_1(\alpha r) \right\} \cos\alpha(z-z_0) \, d\alpha , \quad (3.192)$$

$$A^{(3)}(r,z) = \frac{\mu I}{\pi}\int_0^\infty \frac{r_0 I_1(\alpha r_0)}{aD(\alpha)} \Big\{ I_1(\alpha_1 r)[\beta_1 K_1'(\alpha_1 b)K_1(\alpha_2 b) - \beta_2 K_1'(\alpha_2 b)K_1(\alpha_1 b)]$$

$$+ K_1(\alpha_1 r)[\beta_2 K_1'(\alpha_2 b)I_1(\alpha_1 b) - \beta_1 I_1'(\alpha_1 b)K_1(\alpha_2 b)]\Big\} \cos\alpha(z-z_0)\, d\alpha \ , \quad (3.193)$$

$$A^{(4)}(r,z) = -\frac{\mu I}{\pi}\int_0^\infty \frac{r_0 I_1(\alpha r_0)}{ab\mu_1 D(\alpha)} K_1(\alpha_2 r)\, \cos\alpha(z-z_0)\, d\alpha \ . \quad (3.194)$$

These are the equations for a delta function coil inside a two-conductor tube. We shall now superimpose them to obtain the results for a coil of rectangular cross section, as shown in Fig. 16. We do this by substituting Eqs. (3.191) through Eqs. (3.194) into Eq. (2.5) and integrating over the dimensions of the coil. We get for the vector potential in the different regions

$$A^{(1)}(r,z) = \frac{\mu IN}{\pi}\int_0^\infty \frac{I_1}{\alpha^3}(\alpha r) \Big\{ I(r_2,r_1)S(\alpha) + K(r_2,r_1)\Big\}$$

$$[\sin\alpha(z-\ell_1) - \sin\alpha(z-\ell_2)]\, d\alpha \ , \quad (3.195)$$

$$A^{(2)}(r,z) = \frac{\mu IN}{\pi}\int_0^\infty \frac{I(r_2,r_1)}{\alpha^3} \Big\{ I_1(\alpha r)S(\alpha) + K_1(\alpha r)\Big\}$$

$$[\sin\alpha(z-\ell_1) - \sin\alpha(z-\ell_2)]\, d\alpha \ , \quad (3.196)$$

$$A^{(3)}(r,z) = \frac{\mu IN}{\pi}\int_0^\infty \frac{I(r_2,r_1)}{a\alpha^3 D(\alpha)} \Big\{ I_1(\alpha_1 r)[\beta_1 K_1'(\alpha_1 b)K_1(\alpha_2 b) - \beta_2 K_1'(\alpha_2 b)K_1(\alpha_1 b)]$$

$$+ K_1(\alpha_1 r)[\beta_2 K_1'(\alpha_2 b)I_1(\alpha_1 b) - \beta_1 I_1'(\alpha_1 b)K_1(\alpha_2 b)]\Big\}$$

$$[\sin\alpha(z-\ell_1) - \sin\alpha(z-\ell_2)]\, d\alpha \ , \quad (3.197)$$

and

$$A^{(4)}(r,z) = -\frac{\mu IN}{\pi}\int_0^\infty \frac{I(r_2,r_1)}{ab\mu_1\alpha^3 D(\alpha)} K_1(\alpha_2 r)[\sin\alpha(z-\ell_1) - \sin\alpha(z-\ell_2)]\, d\alpha \ . \quad (3.198)$$

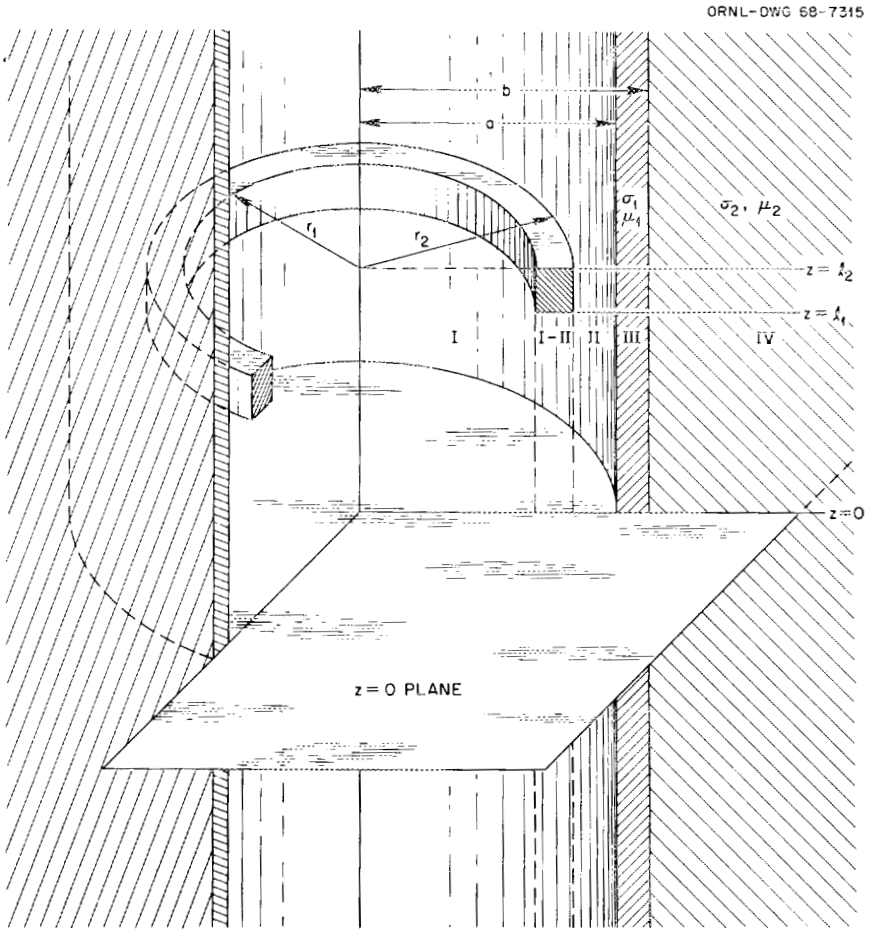

Fig. 16. A Coil of Rectangular Cross Section inside a Two-Conductor Tube.

In the region of the coil, between regions I and II, we have

$$A^{(1,2)}(r,z) = IN \int_{z_0=\ell_1}^{\ell_2} \left\{ \int_{r_0=r_1}^{r} \frac{A_0^{(2)}(r,z,r_0,z_0)dr_0}{i_0} + \int_{r_0=r}^{r_2} \frac{A_0^{(1)}(r,z,r_0,z_0)dr_0}{i_0} \right\} dz_0$$

$$= \frac{\mu I}{\pi} \int_0^{\infty} \frac{1}{\alpha^3} \left\{ I_1(r_2,r_1)I(\alpha r)S(\alpha) + I_1(r,r_1)K_1(\alpha r) \right.$$

$$\left. + I_1(\alpha r)K_1(r_2,r) \right\} [\sin\alpha(z-\ell_1) - \sin\alpha(z-\ell_2)]\, d\alpha \ . \quad (3.199)$$

By using Eq. (3.152), we can write Eq. (3.199) as

$$A^{(1,2)}(r,z) = \frac{\mu IN}{\pi}\int_0^\infty \frac{1}{\alpha^3}\left\{[I(r_2,r_1)I_1(\alpha r)S(\alpha)][\sin\alpha(z-\ell_1) - \sin\alpha(z-\ell_2)]\right.$$

$$\left. + (\pi/2)J(r_2,r_1)J_1(\alpha r)\left(2 - e^{\alpha(z-\ell_2)} - e^{-\alpha(z-\ell_1)}\right)\right\} d\alpha \ . \quad (3.200)$$

We have now obtained the vector potential in each region.

2. Impedance of a Coil inside a Two-Conductor Tube

To calculate the coil impedance, we substitute the equation for the vector potential in region I-II into Eq. (2.18) and integrate. After normalizing the dimensions with respect to the mean coil radius we get

$$Z = \frac{j2\omega n^2\mu\bar{r}}{(\ell_2-\ell_1)^2(r_2-r_1)^2}\int_0^\infty \frac{1}{\alpha^6}\left\{4I^2(r_2,r_1)S(\alpha)\sin^2\left[\frac{\alpha}{2}(\ell_2-\ell_1)\right]\right.$$

$$\left. + \pi J^2(r_2,r_1)[\alpha(\ell_2-\ell_1) - 1 + e^{-\alpha(\ell_2-\ell_1)}]\right\} d\alpha \ . \quad (3.201)$$

A computer program (INNC05) has been designed to calculate the normalized impedance for this case.[28]

3. Defects in the Inner Material

We can write the equation for the impedance change due to a current defect in region III by substituting the vector potential in region III into Eq. (2.28). If we normalize the dimensions by $\bar{r}$ and the impedance by the air value, we obtain

---

[28] J. W. Luquire, C. V. Dodd, W. E. Deeds, and W. G. Spoeri, Computer Programs for Some Eddy Current Problems, ORNL-TM-2501 (in preparation).

$$Z_n' = \frac{3}{4\pi^3}(\omega\mu\sigma_1\bar{r}^2)\ \mathrm{Vol}\ \alpha_{22}\left\{\int_0^\infty \frac{I(r_2,r_1)}{a\alpha^3 D(\alpha)}\Big[I_1(\alpha_1 r)[\beta_1 K'(\alpha_1 b)K_1(\alpha_2 b)\right.$$

$$- \beta_2 K_1'(\alpha_2 b)K_1(\alpha_1 b)] + K_1(\alpha_1 r)[\beta_2 K_1'(\alpha_2 b)I_1(\alpha_1 b) - \beta_1 I_1'(\alpha_1 b)K_1(\alpha_2 b)]\Big]$$

$$\left.\times\ [\sin\alpha(z-\ell_1) - \sin\alpha(z-\ell_2)]\ d\alpha\right\}^2$$

$$\div \int_0^\infty \frac{1}{\alpha^6} J^2(r_2,r_1)[\alpha(\ell_2-\ell_1) + e^{-\alpha(\ell_2-\ell_1)} - 1]\ d\alpha\ , \quad (3.202)$$

from which we can readily find the defect sensitivity factor, since this is just Z_n'/α_{22} Vol.

There is a program (INDFT5) designed to calculate the defect sensitivity factor due to a small current defect in the inner conductor.[28] In addition, there is a program (INDFTL) designed to calculate the defect sensitivity factor at all points in a lattice in the inner conductor.

4. Defects in the Outer Material

Substitution of Eq. (3.198) into Eq. (2.28) gives the normalized impedance change due to a defect in region IV:

$$Z_n' = \frac{3}{4\pi^3}(\omega\mu\sigma_2\bar{r}^2)\ \mathrm{Vol}\ \alpha_{22}\left\{\int_0^\infty \frac{I(r_2,r_1)K_1(\alpha_2 r)}{ab\mu_1\alpha^3 D(\alpha)}[\sin\alpha(z-\ell_1) - \sin\alpha(z-\ell_2)]\ d\alpha\right\}^2$$

$$\div \int_0^\infty \frac{1}{\alpha^6} J^2(r_2,r_1)[\alpha(\ell_2-\ell_1) + e^{-\alpha(\ell_2-\ell_1)} - 1]\ d\alpha\ . \quad (3.203)$$

There is a program (INDFB5) designed to calculate the defect sensitivity factor for a current defect in the outer conductor.[28]

IV. Calculated Results for Some Important Applications

We have derived the equations for some physical properties for the six different coil and conductor configurations shown in Fig. 17. We shall now present computer evaluations of some of these properties.

ORNL-DWG 68-7311

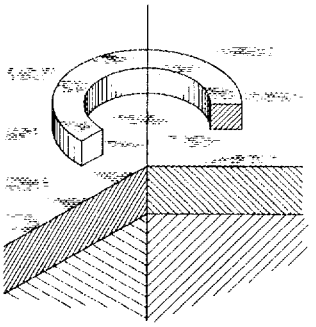

(a) CASE 1: COIL ABOVE TWO-CONDUCTOR PLANE.

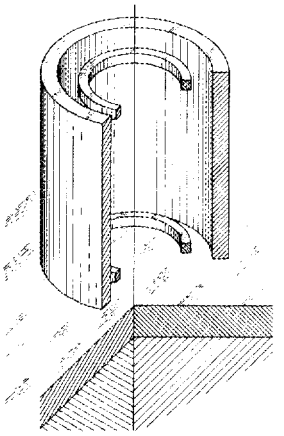

(b) CASE 2: REFLECTION-TYPE COIL (AS USED IN PHASE-SENSITIVE INSTRUMENT) ABOVE A TWO-CONDUCTOR PLANE.

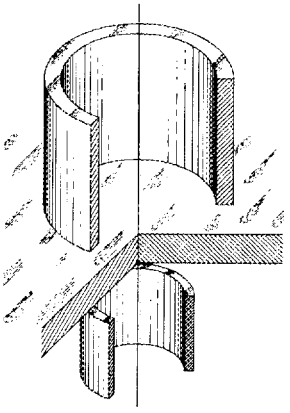

(c) CASE 3: THROUGH-TRANSMISSION COILS (AS USED IN PHASE-SENSITIVE INSTRUMENT.

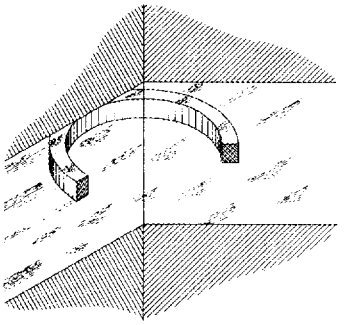

(d) CASE 4: COIL BETWEEN TWO-CONDUCTING PLANES (FOR SPACING MEASUREMENTS.

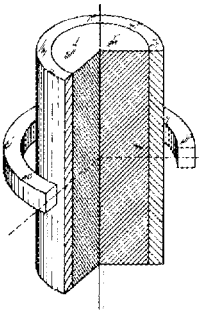

(e) CASE 5: COIL ENCIRCLING TWO CONDUCTOR ROD.

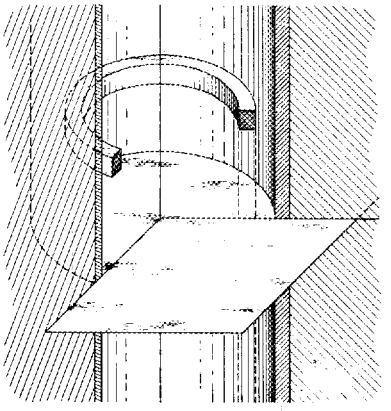

(f) CASE 6: COIL INSIDE TWO CONDUCTOR TUBE.

Fig. 17. Eddy-Current Problems Treated Here.

The first quantity is the impedance of a coil above a two-conductor plane. Figure 18 shows how the impedance varies as the cladding thickness is varied from zero to infinity. There are two different curves corresponding to two different base materials of different conductivities. These curves indicate the accuracy of measuring cladding thickness and the effect of a change in conductivity of the base material.

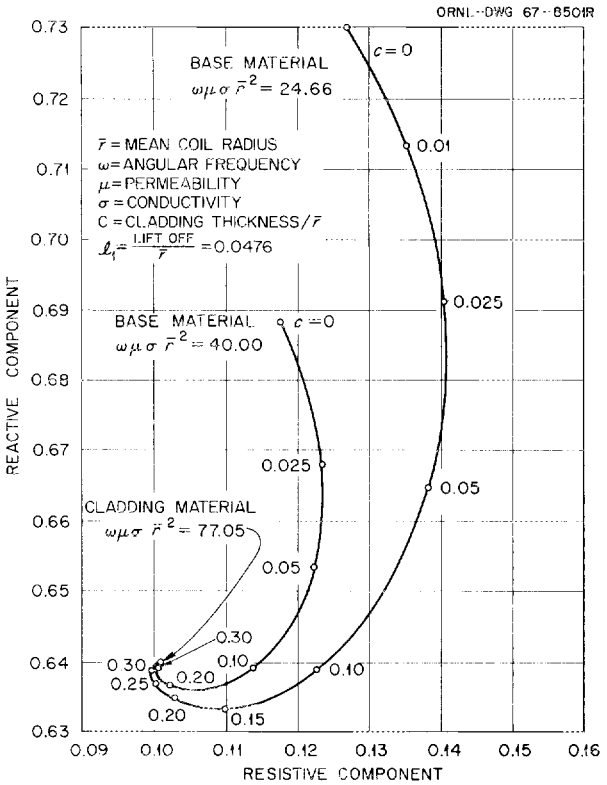

Fig. 18. Impedance of a Coil above a Two-Conductor Plane.

As a further application, we have calculated the defect sensitivity factor for a coil above a conducting plate. We have calculated the factor at points in a lattice and plotted contours of constant defect sensitivity. Figure 19 shows the defect sensitivity factor contours superimposed on a scale drawing of the coil and conductor. We can use these contours to calculate the impedance change due to a current defect at any location in the metal or due to movement of the defect past the coil. The normalized impedance change is the product of the defect sensitivity factor, the volume of the defect, and the shape and orientation factor.

ORNL-DWG 68-7317

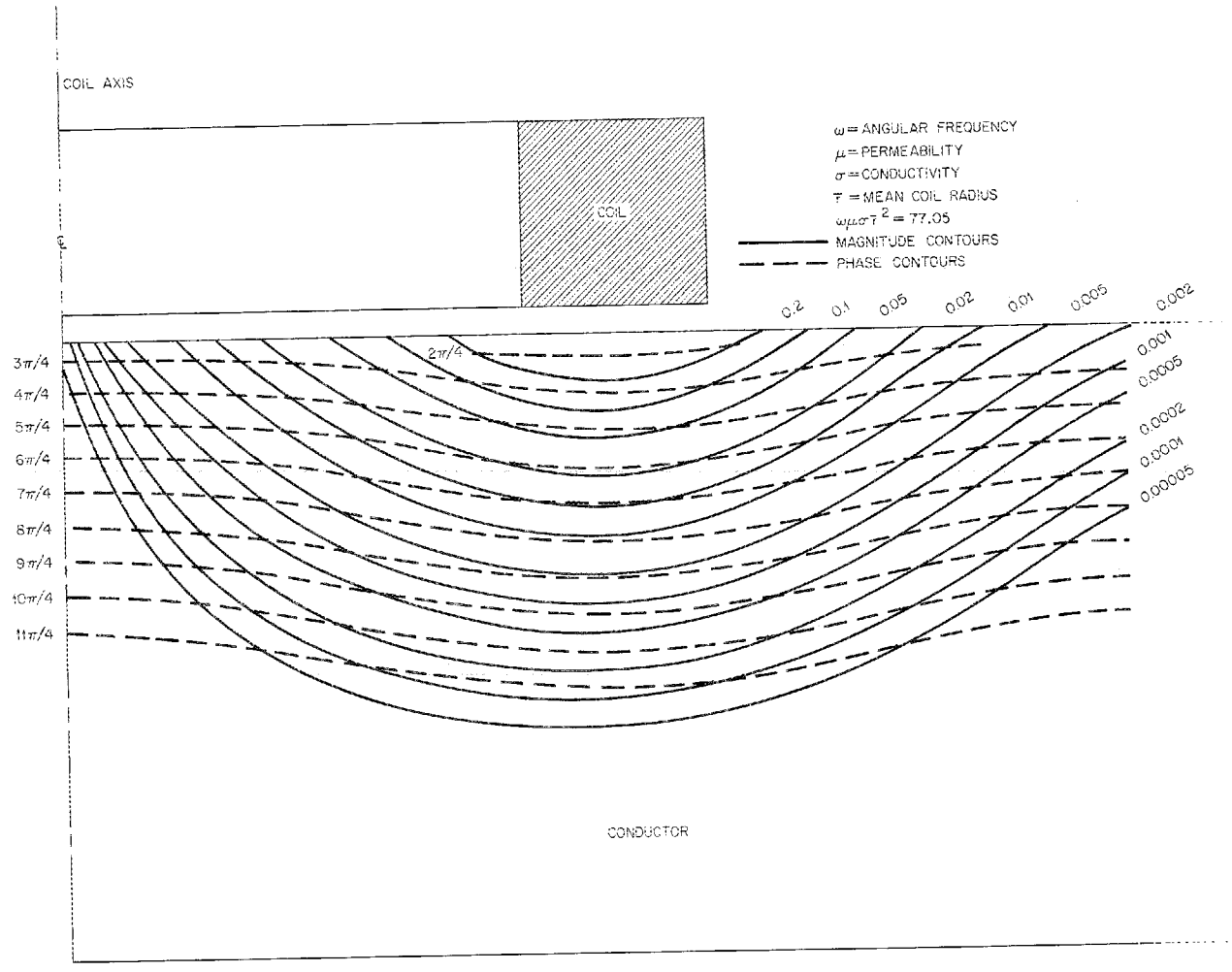

Fig. 19. Contours of the Defect Sensitivity Factor for a Coil above a Conducting Plate.

Another application involves the reflection-type coil. We are attempting to determine the optimum operating conditions for maximum sensitivity to an incremental thickness change from a certain nominal thickness. Figure 20 shows how the phase shift per incremental thickness varies as a function of the operating conditions for four different nominal thicknesses. From this graph, one can choose the optimum frequency for a particular coil, material, and thickness range.

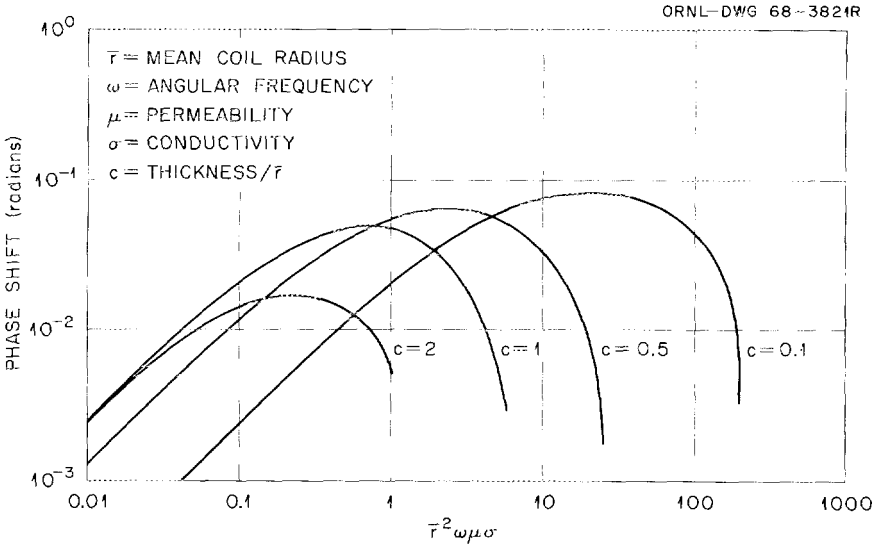

Fig. 20. The Phase Shift for ±10% Thickness Variation from Nominal Thickness.

For a coil encircling a two-conductor rod, Fig. 21 shows the normalized impedance as a function of the radius of the inner conductor. The conductivity of the inner conductor differs for the two curves, but all other parameters are the same. This example demonstrates the range and sensitivity of clad thickness measurements and the problems resulting from a change in the conductivity of the inner conductor.

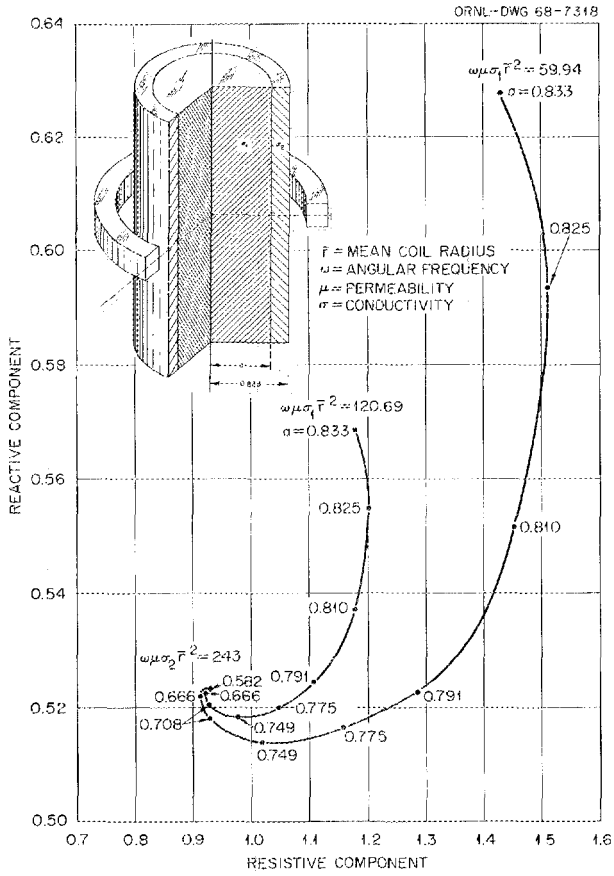

Fig. 21. Impedance Variation as a Function of Inner Radius.

V. Experimental Verification

While we do not yet have experimental measurements for every case derived, we do have results for enough cases to verify the general techniques. It is very difficult to control the coil dimensions precisely enough to obtain good agreement between calculated and measured results.

Our first experimental measurements are of the inductance of a coil in air. They are compared with calculated values in Table 1.

The measurements were made on a bridge with a reported accuracy of ±0.2%. We feel that most of the error is due to small variations in the coil windings.

We have constructed a family of four coils of different sizes but with the same relative dimensions. We measured the impedance of each coil at six different frequencies and at four different spacings above

Table 1. Calculated and Measured Coil Inductance

Coil Number	Measured (mh)	Calculated (mh)	Error (%)
1	11.38	11.1688	1.8
2	14.595	14.3438	1.72
3	134.7	135.216	0.38
4	3.157	3.16425	0.23

a large, thick aluminum plate. The results were normalized and plotted in Fig. 22. Each experimental point represents the average of values for the four different coils. The agreement between experimental and calculated values is excellent in the regions of the plot representing the

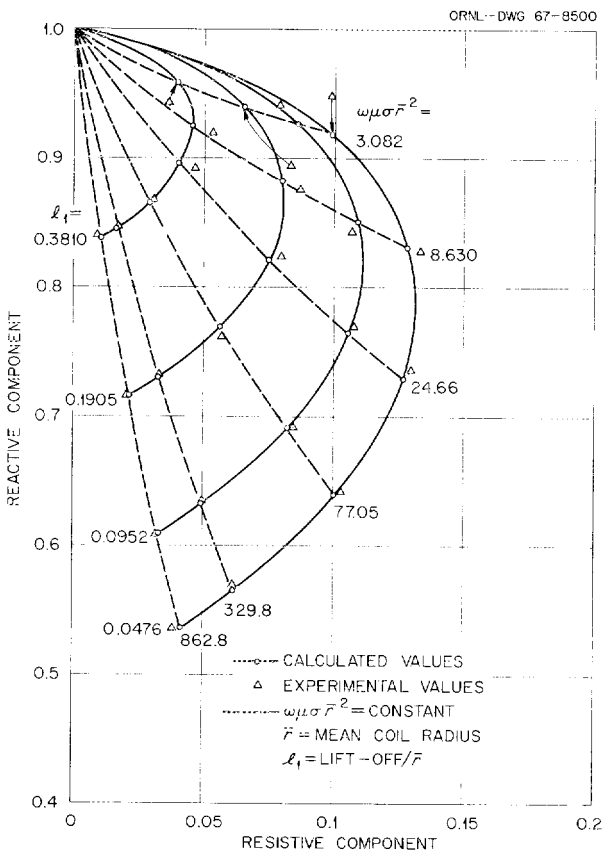

Fig. 22. Variation of Experimental and Calculated Values of Normalized Coil Impedance with Frequency and Lift-Off.

higher frequencies. At the lower frequencies, the experimental measurements are relatively inaccurate. The agreement is within the limits of experimental error in all cases.

We have obtained some experimental results for a reflection coil above a conducting plate. We measured the amplitude and phase of the voltage in the pickup coil as a function of lift-off and plate thickness. Figure 23 compares the measured voltage with the calculated voltage, and Fig. 24 shows the measured and calculated phase shifts. In addition, for the through-transmission case, we measured the phase and amplitude of the voltage of the receiver coil as a function of lift-off and metal thickness.

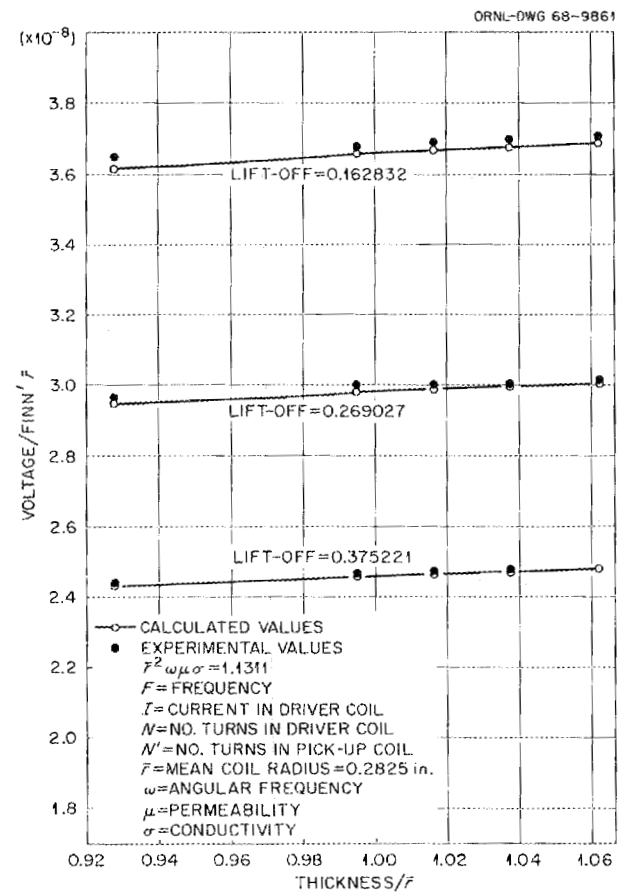

Fig. 23. Variation of Experimental and Calculated Values of the Magnitude of the Reflected Voltage with Thickness and Lift-Off.

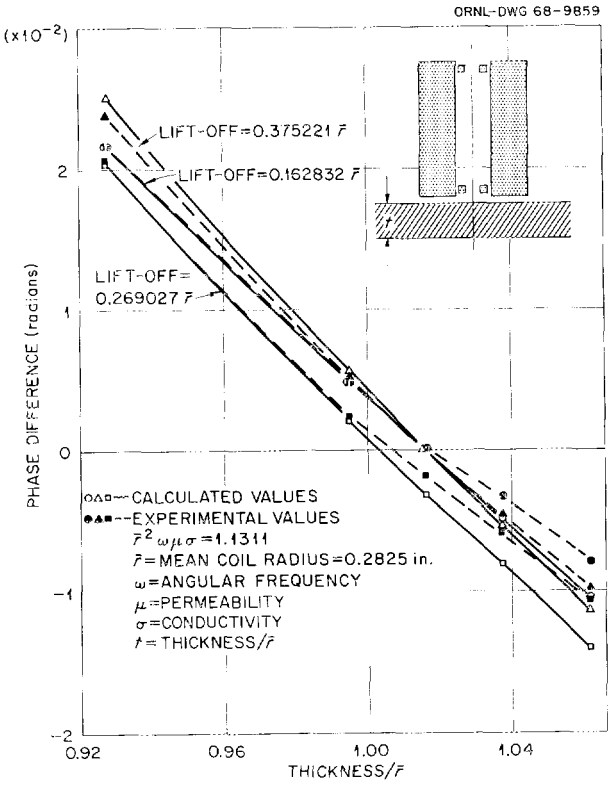

Fig. 24. Variation of Experimental and Calculated Values of the Phase Shift of the Reflected Voltage with Thickness and Lift-Off.

Figure 25 shows how the magnitude of the measured voltage compares with the calculated values, and Fig. 26 shows the measured and calculated phase shifts. The agreement is fairly good and within the limits of experimental error.

We have measured and calculated the eddy-current force exerted on a large, thick aluminum plate by an alternating current flowing in a coil. The force was measured for two coils of different sizes but the same relative dimensions. It was then divided by the square of the number of ampere-turns and multiplied by 10^7. The averaged results are given in Table 2.

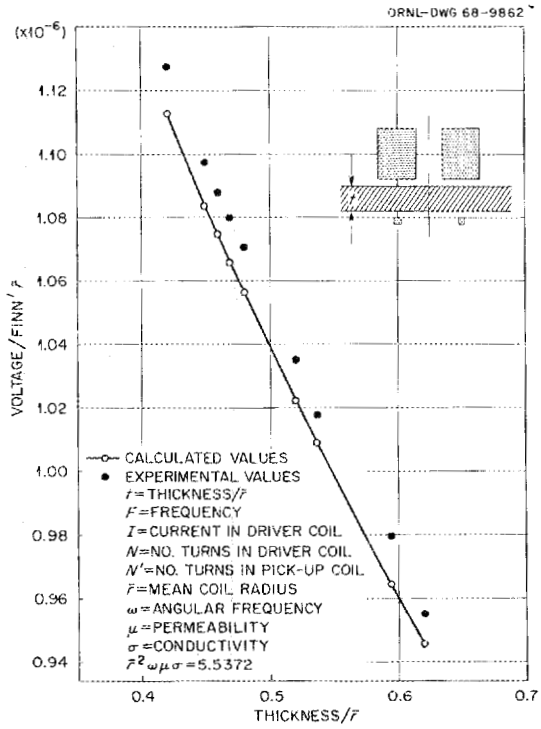

Fig. 25. Variation of Experimental and Calculated Values of the Magnitude of the Transmitted Voltage with Thickness and Lift-Off.

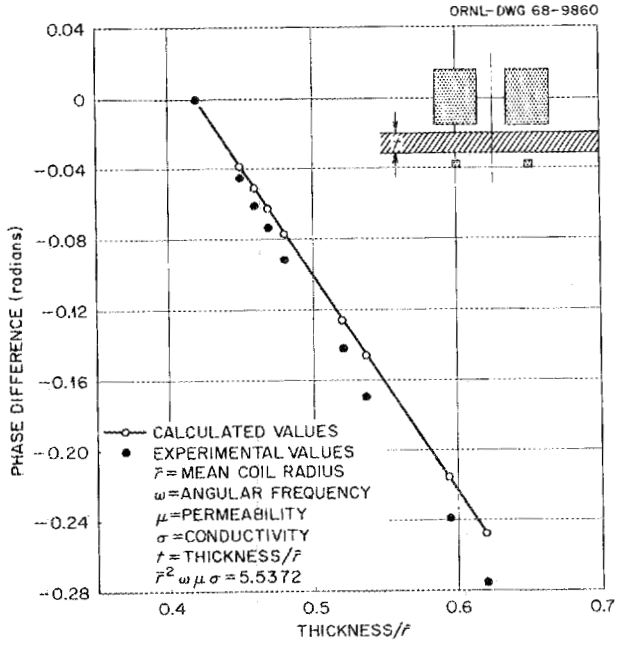

Fig. 26. Experimental and Calculated Values of the Phase Shift of the Transmitted Voltage with Thickness and Lift-Off.

Table 2. Calculated and Measured Force

$\bar{r}^2\mu\omega\sigma$	Measured Force/r^2I^2 ($\times 10^{-7}$ newton/amp^2)	Calculated Force ($\times 10^{-7}$ newton/amp^2)	Error (%)
	Lift-Off/$\bar{r}$ = 0.0476		
3.082	1.053	1.12146	6.1
8.628	2.663	2.80859	5.0
24.65	4.834	5.11168	5.4
77.05	7.148	7.52462	5.0
329.8	9.326	9.82756	5.1
862.8	10.54	10.7935	2.3
	Lift-Off/$\bar{r}$ = 0.0952		
3.082	0.9414	0.987604	4.7
8.628	2.316	2.41421	4.1
24.65	4.140	4.29660	3.6
77.05	5.988	6.17141	3.0
329.8	7.692	7.85378	2.1
862.8	8.575	8.53364	-0.5

VI. Accuracy of Calculations

This technique, like most others used in engineering, is "exact, except for a few assumptions we have to make in order to work the problem." We will now discuss the probable errors in some of these assumptions.

A. Axial Symmetry

This is a very good assumption, but we cannot easily wind coils that have perfect axial symmetry. This error will vary with the winding technique and will decrease as the number of turns on the coil and the coil-to-conductor spacing increases. This error will be effectively reduced when normalized impedance is calculated. For a typical coil it should be less than 0.01%.

B. Current Sheet Approximation

This error arises because we have assumed a current sheet, while we actually have a coil wound with round, insulated wire. Some correction

formulas are given by Rosa and Grover[29] for the inductance of a coil in air.

From Eq. (93) by Rosa and Grover we have

$$\Delta L \approx + \mu_0 n\bar{r} \left\{ \ln \frac{D}{d} + .155 \right\} . \tag{6.1}$$

The symbols D and d are the wire diameters with and without insulation, respectively. This correction is positive and is usually a small fraction of the total inductance. Using the approximate Eq. (87) from Rosa and Grover for the inductance we can write for the fractional inductance change

$$\frac{\Delta L}{L} = \frac{[0.5058r_2 - 0.2742r_1 + 0.44\ (\ell_2 - \ell_1)]}{n} \left(\ln \frac{D}{d} + 0.155 \right) , \tag{6.2}$$

where all dimensions are normalized by the mean coil radius. For a typical coil with 100 turns, the change in inductance is 0.19%. In practice most coils are not wound in precise layers of wire as assumed by Rosa and Grover. Instead, the windings are randomly piled on each other until a coil form is filled. This effect should be a very short-range one. It will have a much smaller effect on some other phenomena, such as normalized coil impedance, which depend on the metal.

C. High Frequency Effects

There are a number of high frequency effects, and they are probably the most serious sources of error in this calculation technique.

1. The Skin Effect

As the frequency increases, the current density ceases to be uniformly distributed over the cross section of the wire but becomes concentrated near the surface. The resistance of the coil increases, and the inductance decreases. As a first approximation the resistance, R, of a circular cross section of straight wire is[30]

---

[29] E. B. Rosa and F. W. Grover, Nat. Bur. Std. (U.S.), Tech. News Bull. 8(1), 1-237 (1912).

[30] Frederick W. Grover, Inductance Calculations Working Formulas and Tables, Dover, New York, 1962.

$$R \approx R_0 \left[1 + \frac{1}{48}\left(\frac{r_0}{\delta}\right)^4\right], \tag{6.3}$$

where R_0 is the low frequency resistance, r_0 is the wire radius, and δ is the skin depth. Thus the effect is less than 0.13% as long as δ is greater than $2r_0$. We have calculated the frequency producing this much effect for some different sizes of copper wire. They are listed below:

Brown and Sharp Wire Gage Number	Frequency (hertz)
20	6.6×10^3
30	67×10^3
40	680×10^3
42	1.1×10^6

The self-inductance decreases slightly at higher frequencies due to the concentration of current on the surface. For a length of straight wire, ℓ, the self-inductance changes from

$$2\ell\left(\ln\frac{2\ell}{r_0} - \frac{3}{4}\right) \times 10^{-9} \text{ to } 2\ell\left(\ln\frac{2\ell}{r_0} - 1\right) \times 10^{-9}$$

as the frequency goes from zero to infinity, or a net change of $\frac{\ell}{2} \times 10^{-9}$ h. This represents a net change of less than 10 ppm on a typical coil. The skin effect for the case of a straight wire is modified considerably when the wire is wound into a coil. However, these equations may be used for order-of-magnitude estimates.

2. Interwinding Capacitance

The interwinding capacitance is the distributed capacitance between the individual turns of wire, and it decreases as the thickness of the wire insulation is increased. While it is a distributed capacitance, it acts much as a lumped capacitance in parallel with a series inductance and resistance. This produces the resonant frequency

$$\omega_0 = \frac{1}{\sqrt{L_0 C}} \quad . \tag{6.4}$$

At frequencies much below the resonant frequency ($\omega \ll \omega_0$), the resistance and inductance vary as follows:[30]

$$R \approx R\,[1 + 2(\omega/\omega_0)^2]\ , \tag{6.5}$$

$$L \approx L\,[1 + (\omega/\omega_0)^2]\ . \tag{6.6}$$

Near resonance, the reactance changes rapidly from maximum inductive reactance through zero to maximum capacitive reactance. The current, being capacitively coupled between the turns, tends to flow across the loops of wire rather than through them. In general, coils are used well below their resonant frequency. This effect also is short range and tends to cancel out in normalized inductance calculations.

3. Coil-to-Sample Capacitance

The capacitance between the coil and the sample is generally considerably smaller than the interwinding capacitance. It can be approximated by

$$C = 8.85 \times 10^{-12} \times \frac{(\text{Area of Coil Surface Next to Conductor})}{(\text{Lift-Off})}\ . \tag{6.7}$$

For most coils, this will be on the order of 10 picofarads or less. The effects of the coil-to-sample capacitance can be reduced by winding the coil so that the turns nearest the sample are electrically near alternating-current ground.

4. Displacement Current Effect

In the actual calculation of the results, we have neglected the displacement current terms. We made the following approximation:

$$\alpha \approx \alpha_0 \equiv \sqrt{\alpha^2 - \bar{r}^2\omega^2\mu_0\epsilon_0}\ . \tag{6.8}$$

To determine the amount of error introduced by this approximation, we calculated the normalized impedance of a coil both with and without the approximation. We chose a coil 1 m in mean radius, a frequency of 1 MHz, and a sample resistivity of 2.63×10^7 $\mu\Omega$-cm. These extreme values were chosen so that some effect could be observed. The error in the normalized

real and imaginary parts of the impedance was +59 ppm and +113 ppm, respectively. The error in the coil inductance was −140 ppm. For the coils and conductors normally used in eddy-current work, the effect is completely negligible.

5. Assumption of Linear Media

We have assumed that the media are linear – that is, $B = \mu H$ and $D = \epsilon E$, where μ and ϵ are constants. This is a good assumption if the materials are nonferromagnetic or if all the magnetic domains in a ferromagnetic material are saturated. For ferromagnetic materials, the medium is not only nonlinear, but it frequently has a large amount of hysteresis. While the effects are fairly small for low currents and the ferrite materials, experimental measurements indicate that typical calculated values may be in error by about 10% for ferromagnetic materials.

VII. Conclusions

These integral solutions offer an accurate way to calculate the observed effects of actual eddy-current tests. The agreement between experimental and calculated effects is good, although the number of experimental measurements is still somewhat limited. It is hoped that the ability to calculate these eddy-current pehnomena accurately will lead to eddy-current instruments which can make direct measurements of the physical properties of a specimen without calibration standards.

VIII. Acknowledgments

The authors wish to express their appreciation to W. A. Simpson and L. D. Chitwood for performing the experimental measurements and to D. P. Godsey and L. D. Chitwood for constructing the coils. Further thanks are expressed to Frances Scarboro of the Metals and Ceramics Division Reports Office for the typing and preparation of this report.

APPENDIX

APPENDIX

List of Symbols

In the first column the symbol used is given and in the second column the name. In the third column the meter-kilogram-second (MKS) units are given. In the last column the dimensions are given in terms of mass (M), length (L), time (T), and electric charge (Q).

Symbol	Name	MKS Units	Dimensions
A	vector potential	$\frac{\text{weber}}{\text{meter}}$	$\frac{ML}{TQ}$
B	magnetic induction	$\frac{\text{weber}}{\text{meter}^2}$	$\frac{M}{TQ}$
c	clad thickness	meter	L
D	electric displacement	$\frac{\text{coulomb}}{\text{meter}^2}$	$\frac{Q}{L^2}$
E	electric intensity	$\frac{\text{volt}}{\text{meter}}$	$\frac{ML}{T^2Q}$
H	magnetic intensity	$\frac{\text{ampere}}{\text{meter}}$	$\frac{Q}{TL}$
I	applied current	ampere	$\frac{Q}{T}$
i_0	applied current density	$\frac{\text{ampere}}{\text{meter}^2}$	$\frac{Q}{TL^2}$
$I(r_2,r_1)$	$\alpha^2\int_{r_1}^{r_2} r_0 I_1(\alpha r_0)dr_0$		
J	current density	$\frac{\text{ampere}}{\text{meter}^2}$	$\frac{Q}{TL^2}$
j	square root of minus one		
$J(r_2,r_1)$	$\alpha^2\int_{r_1}^{r_2} r_0 J_1(\alpha r_0)dr_0$		
$K(r_2,r_1)$	$\alpha^2\int_{r_1}^{r_2} r_0 K_1(\alpha r_0)dr_0$		

Symbol	Name	MKS Units	Dimensions
L	inductance	henry	$\frac{ML^2}{Q^2}$
ℓ_2	distance from metal to top of the coil	meter	L
ℓ_1	distance from metal to bottom of the coil	meter	L
M	mutual inductance	henry	$\frac{ML^2}{Q^2}$
N	turns per unit area	$\frac{\text{turn}}{\text{meter}^2}$	$\frac{1}{L^2}$
n	number of turns	turn	
r_1	coil inner radius	meter	L
r_2	coil outer radius	meter	L
$\bar{r}$	mean coil radius	meter	L
t	time	second	T
T	period	second	T
V	voltage	volt	$\frac{ML^2}{T^2Q}$
Z	impedance	ohm	$\frac{ML^2}{TQ^2}$
z_0	distance from metal to delta function coil	meter	L
Z_n	normalized impedance		
α	separation constant	meter^{-1}	$\frac{1}{L}$
$\vec{\vec{\alpha}}$	current scattering matrix		
α_0	$(\alpha^2 - \omega^2\mu_0\epsilon_0)^{\frac{1}{2}}$	meter^{-1}	$\frac{1}{L}$
α_i	$(\alpha^2 - \omega^2\mu_i\epsilon_i + j\omega\mu_i\sigma_i)^{\frac{1}{2}}$	meter^{-1}	$\frac{1}{L}$
$\vec{\vec{\beta}}$	magnetic scattering matrix		

Symbol	Name	MKS Units	Dimensions
β_i	$\frac{\mu_0}{\mu_i}(\alpha^2 - \omega^2\mu_i\epsilon_i + j\omega\mu_i\sigma_i)^{\frac{1}{2}}$	meter^{-1}	$\frac{1}{L}$
ϵ	dielectric constant	$\frac{\text{farad}}{\text{meter}}$	$\frac{T^2Q^2}{ML^3}$
μ	permeability	$\frac{\text{henry}}{\text{meter}}$	$\frac{ML}{Q^2}$
σ	conductivity	$\frac{\text{mho}}{\text{meter}}$	$\frac{TQ^2}{ML^3}$
ω	angular frequency	$\frac{\text{radian}}{\text{second}}$	$\frac{1}{T}$

ORNL-4384
UC-25 – Metals, Ceramics, and Materials

INTERNAL DISTRIBUTION

1–2. Central Research Library
3. ORNL Y-12 Technical Library Document Reference Section
4–23. Laboratory Records Department
24. Laboratory Records, ORNL-RC
25. ORNL Patent Office
26. G. M. Adamson, Jr.
27. G. E. Boyd
28. W. D. Brown
29. G. W. Clark
30. J. E. Cunningham
31–80. C. V. Dodd
81. J. H Frye, Jr.
82. W. Fulkerson
83. J. L. Gregg
84. W. O. Harms
85–87. M. R. Hill
88. C. E. Larson
89. H. G. MacPherson
90. D. L. Mason, Y-12
91. R. W. McClung
92. W. L. Moore
93. H. M. Smith
94. K. E. Spear
95. W. G. Spoeri
96. D. A. Sundberg
97. A. M. Weinberg
98. V.R.R. Uppuluri
99. C. M. Adams, Jr. (consultant)
100. Leo Brewer (consultant)
101. L. S. Darken (consultant)
102. J. A. Krumhansl (consultant)

EXTERNAL DISTRIBUTION

103. S. Aveyard, AERE-Harwell, Didcot, Berkshire, England
104. R. L. Brown, Jr., GE-Hanford
105. D. F. Cope, RDT, SSR, AEC, Oak Ridge National Laboratory
106–115. W. E. Deeds, The University of Tennessee
116. Robert C. Grubinskas, Department of the Army, Army Materials and Mechanics Research Center, Watertown, Mass. 02172
117. Donald R. Green, BNL, Hanford
118. W. J. Larkin, AEC, Oak Ridge Operations
119. H. L. Libby, GE-Hanford
120. J. W. Luquire, The University of Tennessee
121. M. C. McIlwain, R-QUAL-ARA, G. C. Marshall Space Flight Center, Marshall Center, Ala. 35812
122. J. F. Pierce, The University of Tennessee
123. C. J. Renken, Argonne National Laboratory
124. Roy S. Sharpe, AERE-Harwell, Didcot, Berkshire, England
125–126. J. M. Simmons, AEC, Washington
127–128. E. E. Stansbury, The University of Tennessee
129. D. K. Stevens, AEC, Washington
130. J. A. Swartout, Union Carbide Corporation, New York
131. D. L. Waidelich, Department of Electrical Engineering, University of Missouri, Columbia, Mo. 65201
132. Laboratory and University Division, AEC, Oak Ridge Operations
133–327. Given distribution as shown in TID-4500 under Metals, Ceramics, and Materials category