LOCKHEED MARTIN ENERGY RESEARCH LIBRARIES

3 4456 0513008 8

113

'IONAL LABORATORY
operated by
UNION CARBIDE CORPORATION
NUCLEAR DIVISION
for the
U.S. ATOMIC ENERGY COMMISSION

CENTRAL RESEARCH LIBRARY
DOCUMENT COLLECTION

ORNL-TM-2170

HOT-CELL STUDIES OF THE FLUIDIZED-BED FLUORIDE VOLATILITY PROCESS FOR RECOVERING URANIUM AND PLUTONIUM FROM SPENT UO_2 FUELS

J. C. Mailen and G. I. Cathers

OAK RIDGE NATIONAL
CENTRAL RESEARC
DOCUMENT COLL
LIBRARY LO
DO NOT TRANSFER TO A
If you wish someone el
document, send in name
and the library will arra
UCN-7969
(3 3-67)

NOTICE This document contains information of a preliminary nature and was prepared primarily for internal use at the Oak Ridge National Laboratory. It is subject to revision or correction and therefore does not represent a final report.

LEGAL NOTICE

This report was prepared as an account of Government sponsored work. Neither the United States, nor the Commission, nor any person acting on behalf of the Commission:

A. Makes any warranty or representation, expressed or implied, with respect to the accuracy, completeness, or usefulness of the information contained in this report, or that the use of any information, apparatus, method, or process disclosed in this report may not infringe privately owned rights; or

B. Assumes any liabilities with respect to the use of, or for damages resulting from the use of any information, apparatus, method, or process disclosed in this report.

As used in the above, "person acting on behalf of the Commission" includes any employee or contractor of the Commission, or employee of such contractor, to the extent that such employee or contractor of the Commission, or employee of such contractor prepares, disseminates, or provides access to, any information pursuant to his employment or contract with the Commission, or his employment with such contractor.

ORNL-TM-2170

Contract No. W-7405-eng-26

CHEMICAL TECHNOLOGY DIVISION

Chemical Development Section B

HOT-CELL STUDIES OF THE FLUIDIZED-BED FLUORIDE VOLATILITY PROCESS FOR RECOVERING URANIUM AND PLUTONIUM FROM SPENT UO_2 FUELS

J. C. Mailen and G. I. Cathers

APRIL 1969

OAK RIDGE NATIONAL LABORATORY
Oak Ridge, Tennessee
operated by
UNION CARBIDE CORPORATION
for the
U.S. ATOMIC ENERGY COMMISSION

LOCKHEED MARTIN ENERGY RESEARCH LIBRARIES

3 4456 0513008 8

CONTENTS

Page

Abstract 1

1. Introduction 2

2. Experimental 3

2.1 Equipment Used 3

2.2 Sampling Procedure 9

2.3 Experimental Materials 10

3. Results and Discussion 10

3.1 Oxidation of Fuel 10

3.2 Volatilization of Uranium with BrF_5 12

3.3 Desorption of Uranium 21

3.4 Volatilization of PuF_6 with Fluorine 21

3.5 Recovery of Plutonium from NaF Trap 29

4. Conclusions 29

5. References 30

HOT-CELL STUDIES OF THE FLUIDIZED-BED FLUORIDE VOLATILITY PROCESS FOR RECOVERING URANIUM AND PLUTONIUM FROM SPENT UO_2 FUELS

J. C. Mailen and G. I. Cathers

ABSTRACT

Bench-scale experiments with UO_2 that had been irradiated to a burnup of 34,000 Mwd/metric ton and cooled for two years were performed, using a 0.94-in.-ID fluidized-bed reactor. The objectives of these experiments were to test NaF at 400°C for use as a trap for volatile fission product fluorides, to test MgF_2 for use as a trap for neptunium and technetium fluorides, to test NaF at 550°C for use as a trap for sorbing PuF_6 and separating it from ruthenium, to study the behavior of neptunium, and to determine the fate of tritium.

In these studies the UO_2 was first oxidized with 20% O_2--80% N_2 at 450°C, to form U_3O_8; this was then treated with BrF_5-N_2 mixtures (5 to 10% BrF_5) at 300°C to form UF_6 and volatilize the uranium and most of the ruthenium, molybdenum, and technetium fluorides; finally, treatment with fluorine at 300 to 500°C was used to fluorinate and volatilize the plutonium as PuF_6. In some runs, BrF_3 was used for a final cleanup of uranium after the BrF_5 treatment. Plutonium was separated from the fluorine stream, by irreversible sorption on NaF, in a trap at temperatures above 500°C. Uranium hexafluoride was purified by passage through a 400°C NaF bed and by sorption on, and desorption from, NaF.

A ruthenium decontamination factor of 2000 was obtained by using a 400°C NaF bed and a residence time of 15 sec; cosorption of ruthenium in the plutonium trap

was minimized by operating it at 550 to 600°C. Of the tritium in the fuel, about 95% was liberated during the heatup of the fuel to 450°C and during the oxidation; the other 5% was liberated during the BrF_5 step.

---

1. INTRODUCTION

Hot-cell tests of the fluidized-bed fluoride volatility process were made at Oak Ridge National Laboratory in support of the proposed Fluidized-Bed Volatility Pilot Plant.* These studies were designed to explore the chemical behavior of various fission products, using high-burnup fuel, and to evaluate methods for decontaminating the uranium and plutonium products. Specifically, we attempted to do the following:

1. test NaF at 400°C for its effectiveness in removing volatile fission products,
2. test MgF_2 at 100°C for use as a neptunium and technetium trap,
3. test NaF for use as a plutonium trap, particularly regarding cosorption of ruthenium,
4. examine the behavior of neptunium, and
5. determine the fate of tritium.

The results of these tests and examinations, along with significant observations made in the course of the work, are presented in this report.

Acknowledgments. — The authors wish to recognize the fine work done by the Analytical Chemistry Division in the analysis of the hot samples, and that of J. H. Goode for his analysis of the tritium and plutonium content of the fuel. We were assisted in the initial cold testing of the equipment by T. E. Crabtree; the hot-cell work was performed with the assistance of L. A. Byrd.

---

*Design and construction efforts involving the Fluidized-Bed Volatility Pilot Plant, which was scheduled for installation in Bldg. 3019, were terminated in the fall of 1967 according to a directive issued by the USAEC.

2. EXPERIMENTAL

2.1 Equipment Used

Because space was limited the hot-cell tests were done with small equipment. The fluidized-bed reactor, which was made of 1-in.-OD nickel pipe, had a 2-in.-OD disengaging section. Except for the cold trap and the NaF trap for plutonium sorption, the various traps consisted of 1- or 2-in.-OD nickel tubes.

The fluidized-bed reactor is shown in Fig. 1. The bed was supported in the reactor by a ball check valve. The temperature of the fluidized section was monitored by an external thermocouple in a well that was welded to the side of the reactor. Heat was supplied to the fluidized-bed portion of the reactor by a clamshell heater. The temperature of the disengaging section was monitored by an external thermocouple. Calibration of this thermocouple against an internal thermocouple indicated that the temperature of the gas in the disengaging section was about 30°C higher than that of the wall. The disengaging section was heated by means of a wrapping of asbestos-coated resistance wire (Cerro Corp. "Rockbestos") thermally insulated with Sauereisen. The filter at the top of the disengaging section was periodically blown back by a pulse of 5- to 10-psig nitrogen. The coaxial tube arrangement shown in Fig. 1 created sufficient restriction in the flow out of the bed to ensure that more than half of the blowback pulse passed through the filter. This arrangement eliminated the use of valves, which were known to require frequent maintenance.

Figure 2 shows the flange-filter assembly that was used on the fluidized-bed reactor and on all traps except the cold trap and the NaF trap for plutonium. In this design, the Teflon O-ring acts to seal the flanges and to seal in the filter. The presence of these filters at the top of each trap prevented significant transfer of dust between traps. The filters were replaced after each run.

The traps (except the cold trap and the plutonium trap) were heated with resistance wire wrappings and were insulated with Sauereisen.

ORNL DWG. 69-85

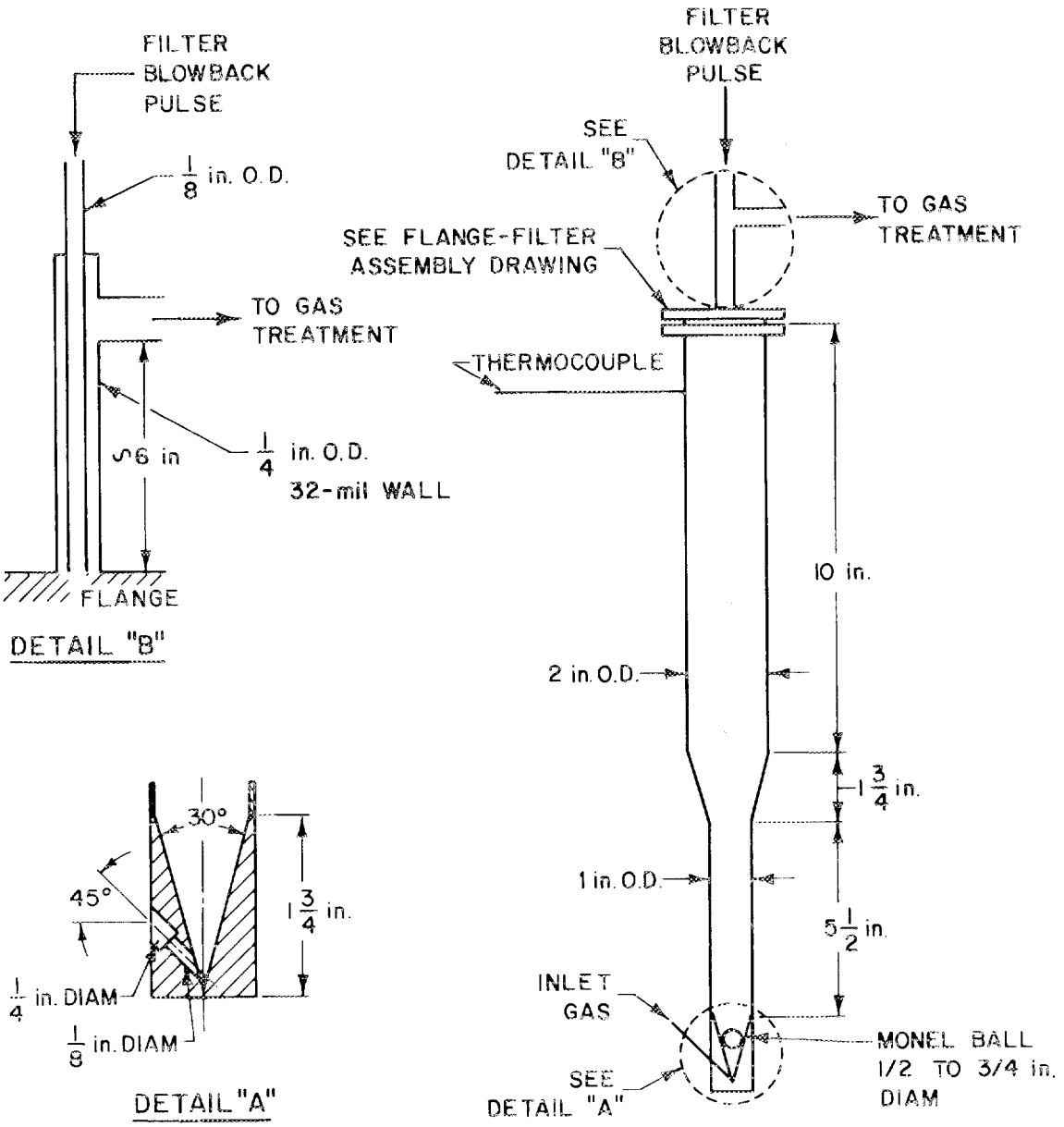

Fig. 1. Schematic Diagram of the 0.94-in.-ID Fluidized-Bed Reactor with Blowback System.

ORNL DWG 69-88

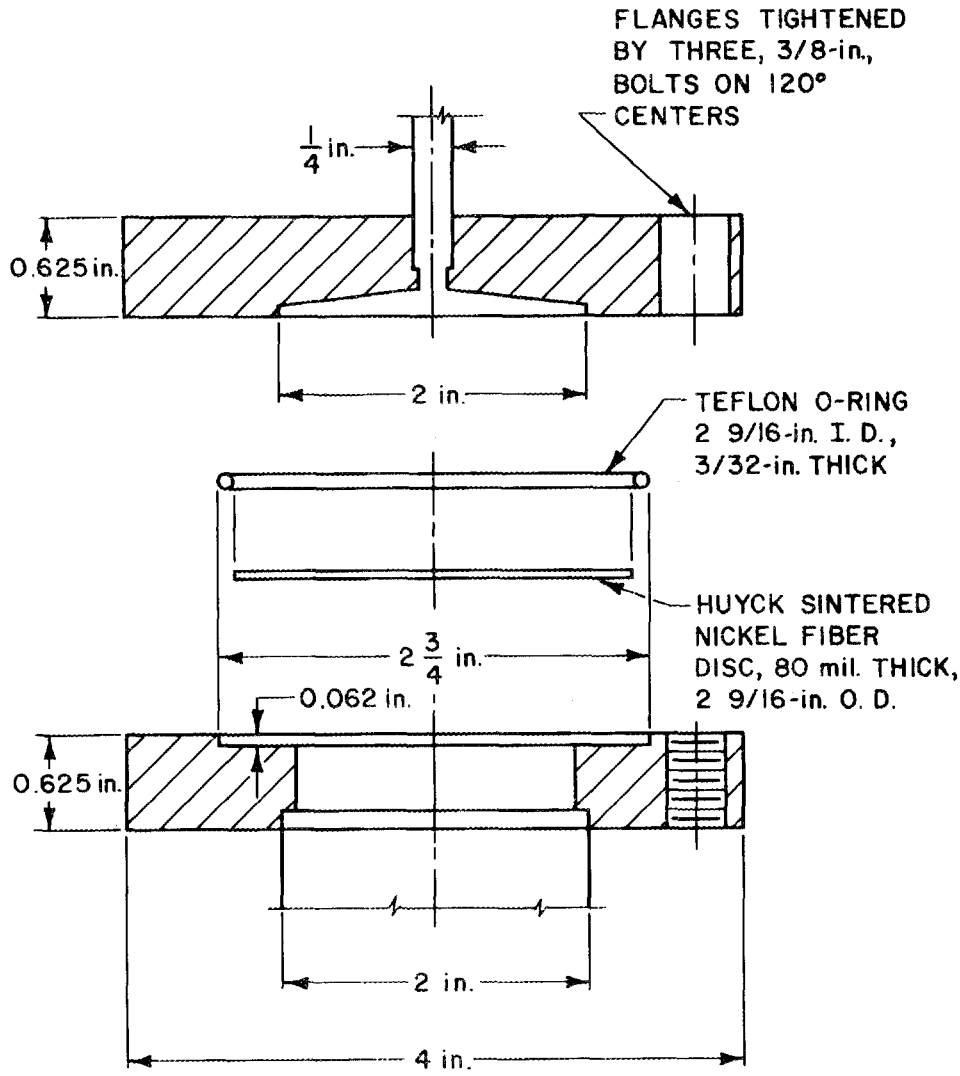

Fig. 2. Standard Flange-Filter Assembly.

The bottom plates were recessed within the heated tubes to prevent a temperature decrease at the bottom of the trap. In each of these traps, the gas entered the trap at the bottom and exited at the top through a flange-filter assembly.

The cold trap, which was used to collect the UF_6 product, consisted of a 6-in.-long, 2-in.-OD nickel tube fitted with a baffle that forced the gas to circulate to within 2 in. of the bottom. The trap was cooled by immersion in dry ice-trichloroethylene.

In the first four hot-cell tests, the plutonium trap consisted of a straight tube having a thermocouple well that entered the side about halfway down the tube; here, the two NaF beds were supported on each side of the thermocouple well. The disadvantage of this type of trap was the large temperature differential (50 to 100°C) across the section of NaF on the gas inlet side. The NaF trap used to sorb plutonium in the most recent tests is shown in Fig. 3. The double-wall design resulted in a very small temperature gradient in the inner tube. Two 2.5-g portions of 12- to 20-mesh NaF, separated by a plug of 3-mil nickel wire, were inserted into this inner tube. The highest temperature occurred at the bottom of the inner tube. The decreases in temperature over the first and second sections were about 1°C and about 4°C, respectively. Thus, this trap could be operated with an essentially constant sorption temperature; it was heated with a clamshell furnace.

Unheated 1/4-in.-OD Kel-F lines served to connect the fluidized-bed reactor, gas supplies, and the various traps. No valves were used inside the cell except on the uranium product cold trap.

Off-gas from the process was passed through the scrubber shown in Fig. 4. The BrF_5 and fluorine streams were scrubbed with 2 N KOH--0.2 N KI solution in 100% excess, and the gas resulting from the oxidation step was scrubbed with water. Representative samples of the scrubber effluent were withdrawn automatically by means of the solenoid valve and timer located at the bottom of the column.

Gas flows into the cell were monitored with differential pressure transmitters (Foxboro 15A-LS2). Nitrogen, oxygen, and fluorine were

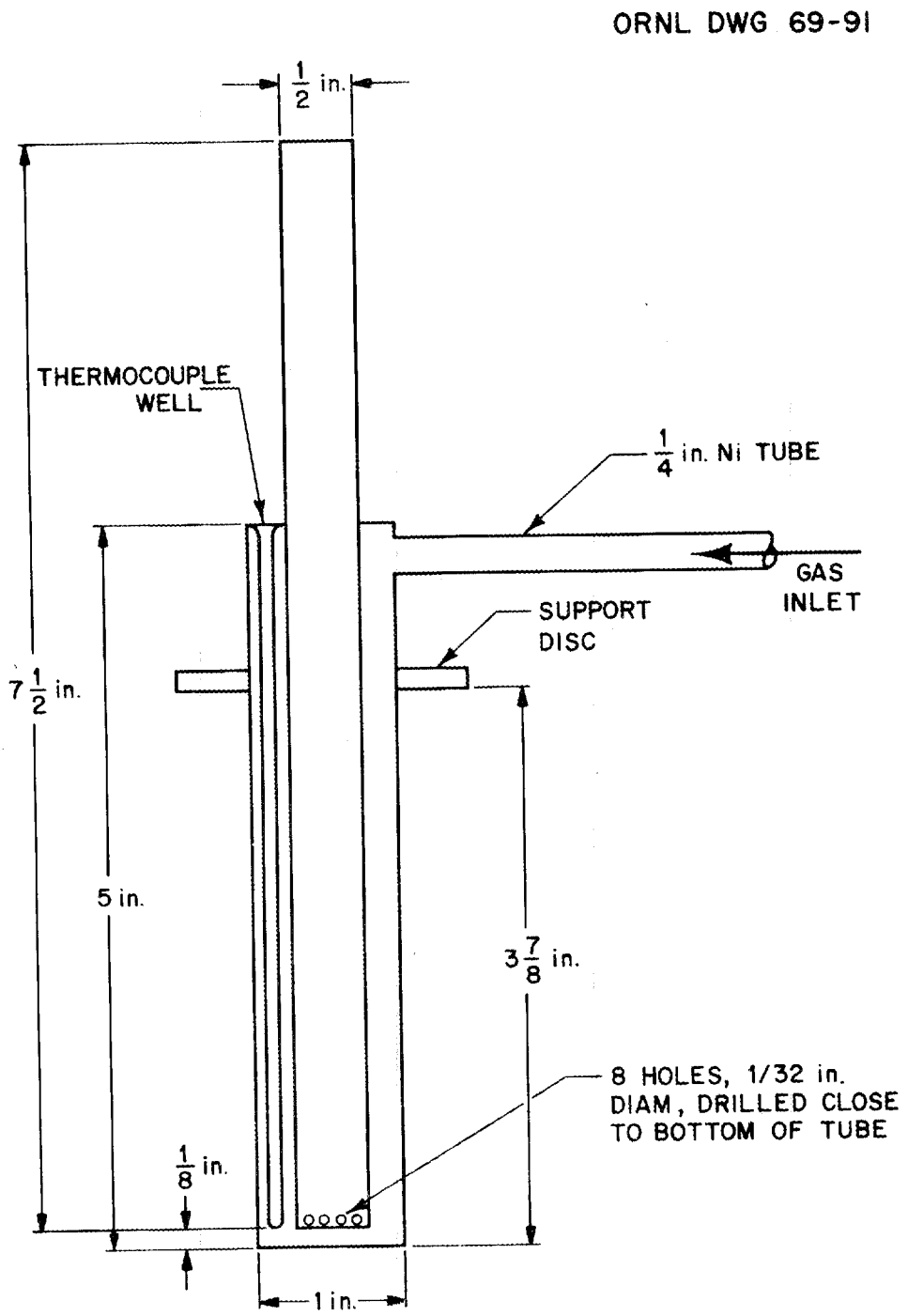

Fig. 3. Plutonium Trap Used in Most Recent Tests.

ORNL DWG 69-86

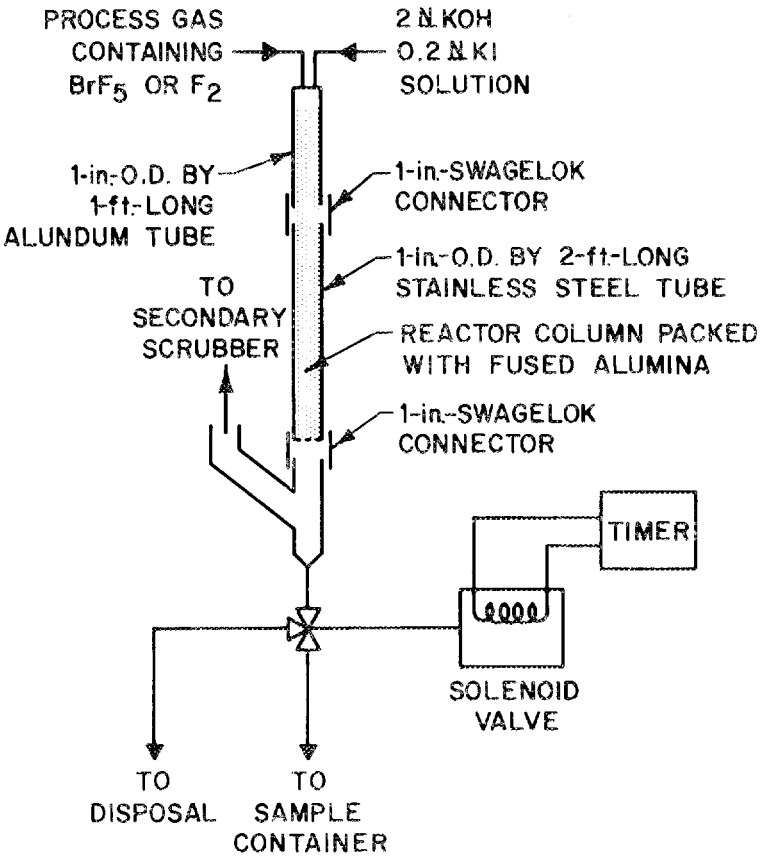

Fig. 4. Fluorine and BrF_5 Disposal Apparatus Used in Hot-Cell Experiments.

piped through ambient-temperature tubing into the cell. Bromine pentafluoride gas was generated by heating a cylinder of liquid BrF_5 to about 50°C and passing it through tubing and differential pressure transmitters heated above this temperature. Before entering the cell, the BrF_5 gas was diluted with nitrogen to eliminate the necessity of heating the lines inside the cell. Bromine trifluoride was produced at the inlet of the fluidized-bed reactor by mixing appropriate amounts of bromine and BrF_5. Bromine was generated by passing nitrogen through a bromine bubbler maintained at 0°C.

2.2 Sampling Procedure

Sampling the solid traps, except the plutonium trap, was done by passing the solids through a funnel with an inverted "Y" bottom until a sample of convenient size (about 7 g except in the case of the fluidized-bed sample, which was 3.5 g) was obtained. Two samples from each trap were submitted for analysis, and the results were averaged. The funnels used for this procedure were washed prior to the sampling step; and, in each run, the "coldest" traps were sampled first as a further precaution against cross-contamination. Such sampling was unnecessary for the plutonium trap since each section of the trap contained only about 2.5 g.

The filter of the fluidized-bed reactor was leached after each run with 100 ml of 2 N $Al(NO_3)_3$ solution, and a sample of the leachate was submitted for analysis. The UF_6 product in the cold trap was hydrolyzed with 200 to 250 ml of 1 N $Al(NO_3)_3$. This hydrolysis was started at either 30°C or −80°C, and then the temperature was increased to 100°C for about 30 min. A more complete recovery of the uranium in the solution was achieved when hydrolysis was begun at 30°C. A sample of the resulting solution and a sample of a water rinse of the cold trap was submitted for analysis.

Samples of the scrub solutions were also submitted for analysis.

2.3 Experimental Materials

All metal vessels, except the scrubber, were fabricated of nickel; the scrubber was constructed of Alundum and stainless steel.

The heat-transfer medium in the fluidized-bed reactor consisted of 50 g of 48- to 100-mesh Alcoa T-61 alumina.

The fuel charge, which consisted of about 34 g of UO_2 from the Yankee reactor, had been irradiated to a burnup of about 34,000 Mwd/metric ton and cooled for two years. The estimated composition of this fuel, as calculated by Merriman's program,[1] is given in Table 1. In general, these values were used in the calculations presented in this report. The isotopic analysis of the plutonium in this fuel, as determined by mass spectrographic methods, is given in Table 2.

The NaF used in the traps (except the plutonium trap) consisted of 1/8-in. right circular cylinders obtained from the Harshaw Chemical Company. In the plutonium trap, broken pellets or fused NaF, 12 to 20 mesh in each case, were used.

Part of the MgF_2 used in the technetium-neptunium trap was obtained from the Paducah Gaseous Diffusion Plant; the remainder was prepared at ORNL by fluorination of $MgSO_4$.

3. RESULTS AND DISCUSSION

3.1 Oxidation of Fuel

Before the start of the oxidation, the fuel was first heated to 450°C in fluidizing nitrogen. The oxidation treatment with 20 vol % O_2 in nitrogen lasted for 2 hr at 450°C and resulted in pulverization of the fuel (see Fig. 5). During the heatup period and the oxidation, about 95% of the tritium was evolved.[2] The initial tritium content was determined by dissolving a 6-g batch of fuel in nitric acid and analyzing the solution and off-gas for tritium;[2] the amount of tritium remaining after oxidation was determined similarly. No significant amounts of other materials, except the rare gases (which were not determined), escaped from the fluidized-bed reactor.

Table 1. Estimated Composition of 34-g Charge[a] of Yankee UO_2 Fuel

Element	mg	dis/min
U	28,600	
Pu	374[b]	
Np	2.5	
Rb	10.4	~ 0
Sr	25.0	4.72×10^{12}
Zr	106.5	2.25×10^{10}
Nb	6.29×10^{-4}	5.01×10^{10}
Mo	103.5	~ 0
Tc	26.4	10^{9}
Ru	65.2	8.44×10^{12}
Te	17.7	3.43×10^{11}
Cs	114.3	7.65×10^{12}
Ce	73.8	1.03×10^{13}
^{3}H[b]		1.15×10^{11}

[a]Fuel had been irradiated to a burnup of 34,000 Mwd/metric ton and cooled for two years.

[b]From unpublished data of J. H. Goode, ORNL.

Table 2. Isotopic Analysis of Plutonium[a] in Yankee UO_2 Fuel

Isotope	At. %
238	2.36
239	57.75
240	20.60
241	13.78
242	5.52
244	< 0.001

[a] dis(α)/(min)(mg Pu) = 10.44×10^8 (calculated).

3.2 Volatilization of Uranium with BrF_5

The uranium volatilization step is shown in Fig. 6. In this step, which was carried out at 300°C, the treatment typically consisted of exposure to 5 vol % BrF_5 for 1 hr, 10% BrF_5 for 2 hr, and 5% BrF_3 for 0.5 hr; in each case, the BrF_5 or BrF_3 was diluted with nitrogen. After the gas containing the volatile fission product fluorides, UF_6, bromine, and bromine fluorides leaves the fluidized-bed reactor, it enters the bottom of the CRP (complexable reaction products) trap, where it is mixed with excess fluorine to convert the bromine to BrF_5. This prevents loss of uranium in the CRP trap via formation of non-volatile UF_5 complexes. In our experiments, an average of about 0.02% of the uranium was found in the CRP trap. Most of the volatile fission product fluorides are removed in this trap. The gas then passes through the uranium sorption traps where uranium, technetium, and some molybdenum are sorbed. Finally, the gas is routed to the scrubber, where the fluorine and bromine fluorides are contacted with KOH-KI solution.

Treatment with BrF_3 for a brief period at the end of the uranium volatilization step has been found to be desirable for the cleanup of

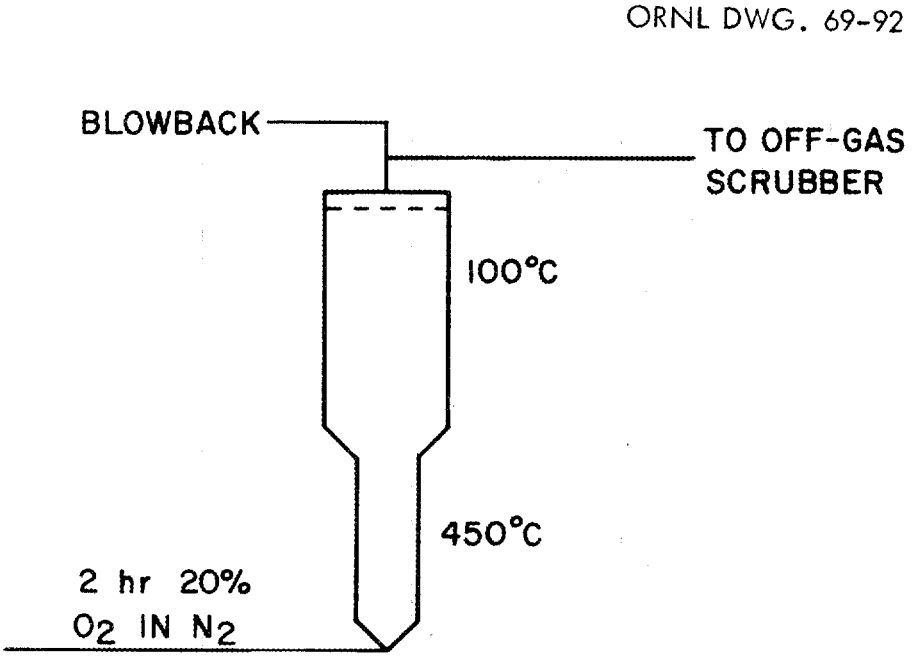

Fig. 5. Oxidation Flowsheet.

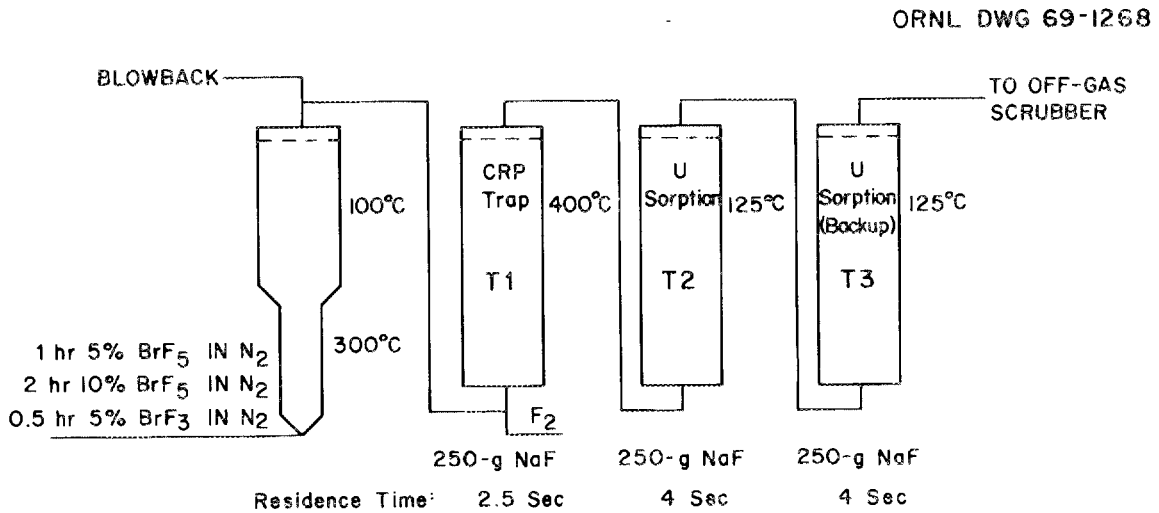

Fig. 6. Uranium Volatilization Flowsheet.

uranium. In Fig. 7 the amount of uranium found in the fluorination step (subsequent to BrF_5-BrF_3 treatment) is plotted vs the BrF_3 treatment time. When no BrF_3 treatment was used after the BrF_5 volatilization, about 3% (~ 960 mg) of the uranium charge was left in the fluidized-bed reactor. However, when a 0.5-hr treatment with 5% BrF_3 in N_2 was used, about 80% of this residual uranium was removed. The utility of BrF_3 lies in its ability to fluorinate uranium at a lower temperature[3] than BrF_5, thereby allowing cleanup of the disengaging system, filter, and lines. Bromine trifluoride also leaves less uranium on the alumina.[3] The very high point at 3 hr exposure is probably due to an experimental error or some analytical error.

Since ruthenium fluoride was the major, high-activity, volatile fission product fluoride present in our experiments, it was studied more extensively than the other fission product fluorides. Figure 8 is a semilogarithmic plot showing the amount of ruthenium that was volatilized during the fluorine treatment vs the equivalent number of liters of BrF_5 passed through the bed during the uranium volatilization step. (Here, one volume of BrF_3 is considered to be equal to 0.6 volume of BrF_5.) This plot should be linear if the volatilization of ruthenium is a first-order reaction with respect to the amount of ruthenium remaining in the fluidized bed. This is seen to be approximately true. The importance of these data lies in the information they provide concerning the handling of a plutonium stream containing ruthenium. It would be advantageous for the ruthenium to be volatilized with the uranium. In our experiments, about 90% of the ruthenium was volatilized with 6.7 liters of BrF_5; this required 33 min of treatment with 10 vol % BrF_5 in nitrogen. For every additional 33-min period of BrF_5 treatment, the ruthenium DF was increased by a factor of 10.

Ruthenium-106 was the only significant gamma emitter found in the CRP trap when the trap was counted with a lead-shielded Geiger tube. Figure 9 shows a plot of the fraction of the gamma activity vs the equivalent fluorine volume. In this plot one volume of BrF_5 is assumed to be equal to 2.5 volumes of F_2, and one volume of BrF_3 is considered equivalent to 1.5 volumes of F_2. When an all-fluorine flowsheet was

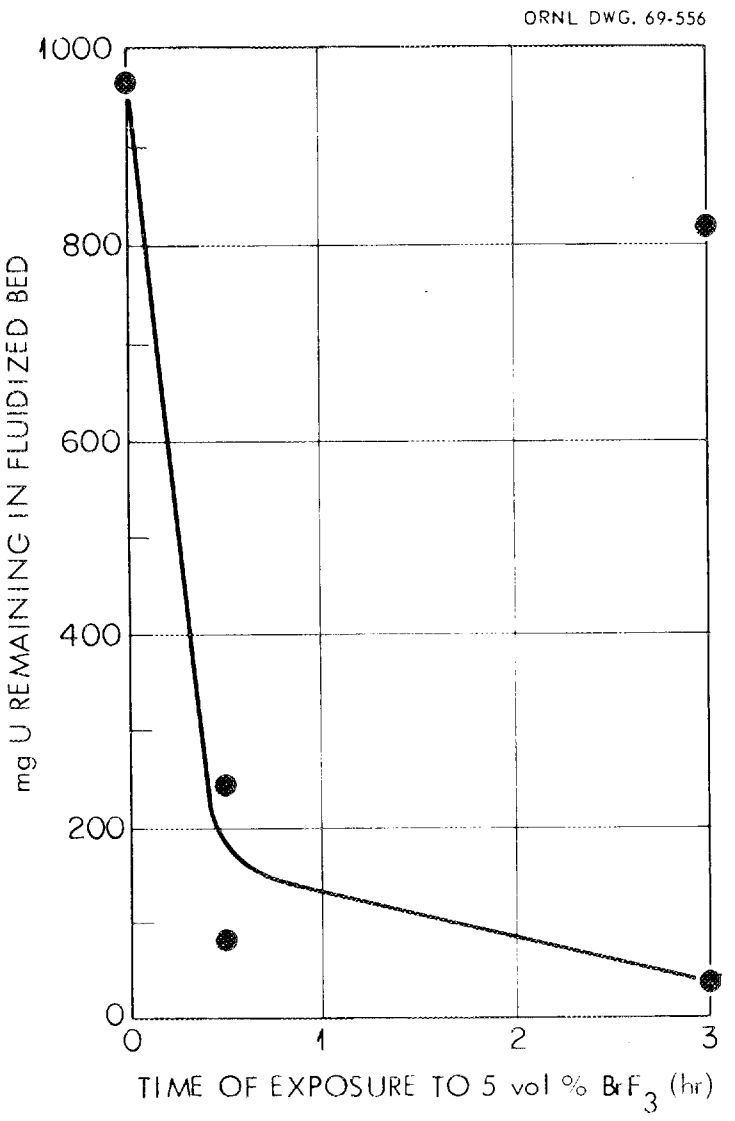

Fig. 7. Residual Uranium vs BrF_3 Exposure.

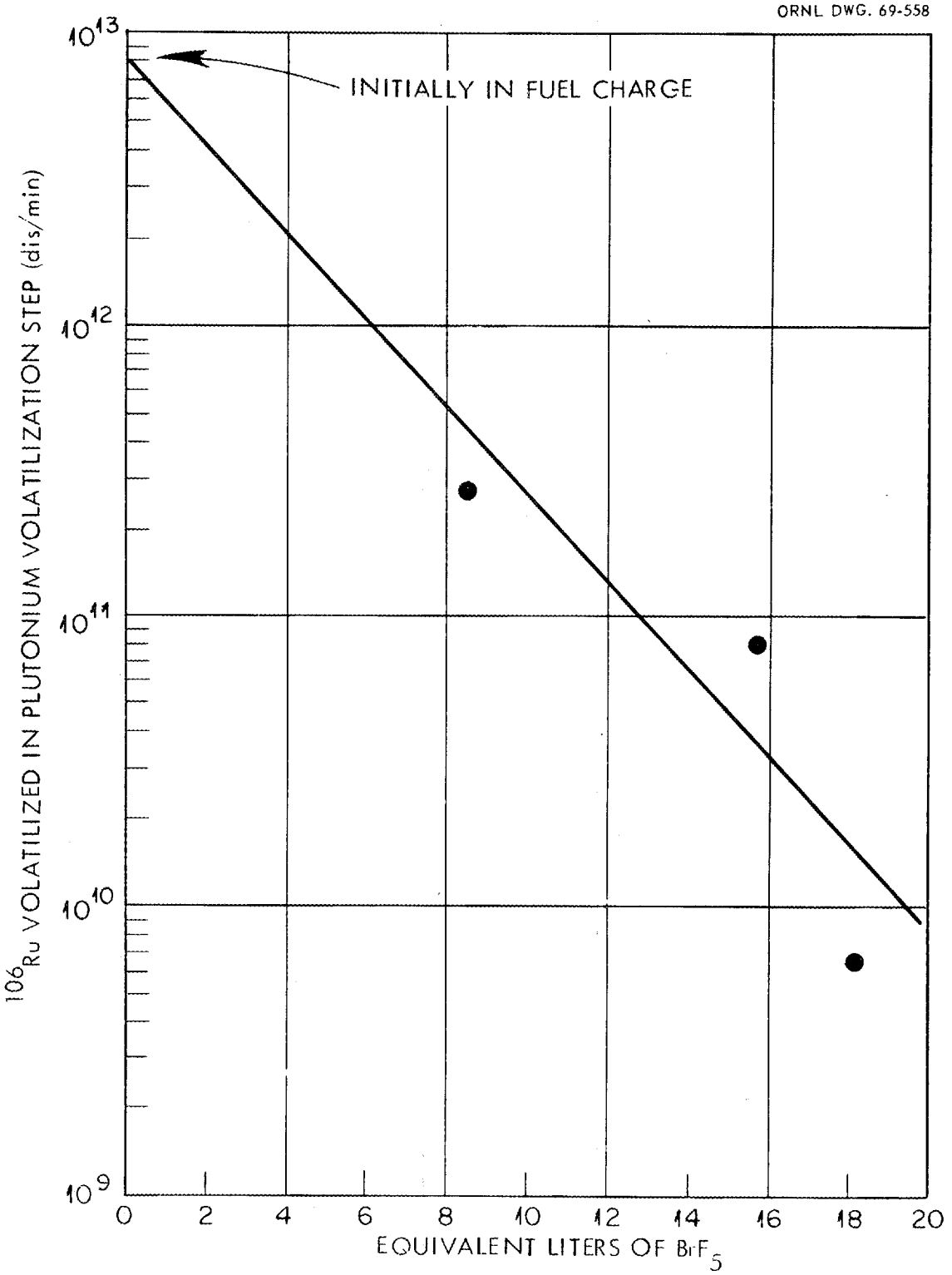

Fig. 8. ^{106}Ru Found in Pu Volatilization vs Exposure to BrF_5 in Uranium Volatilization Step.

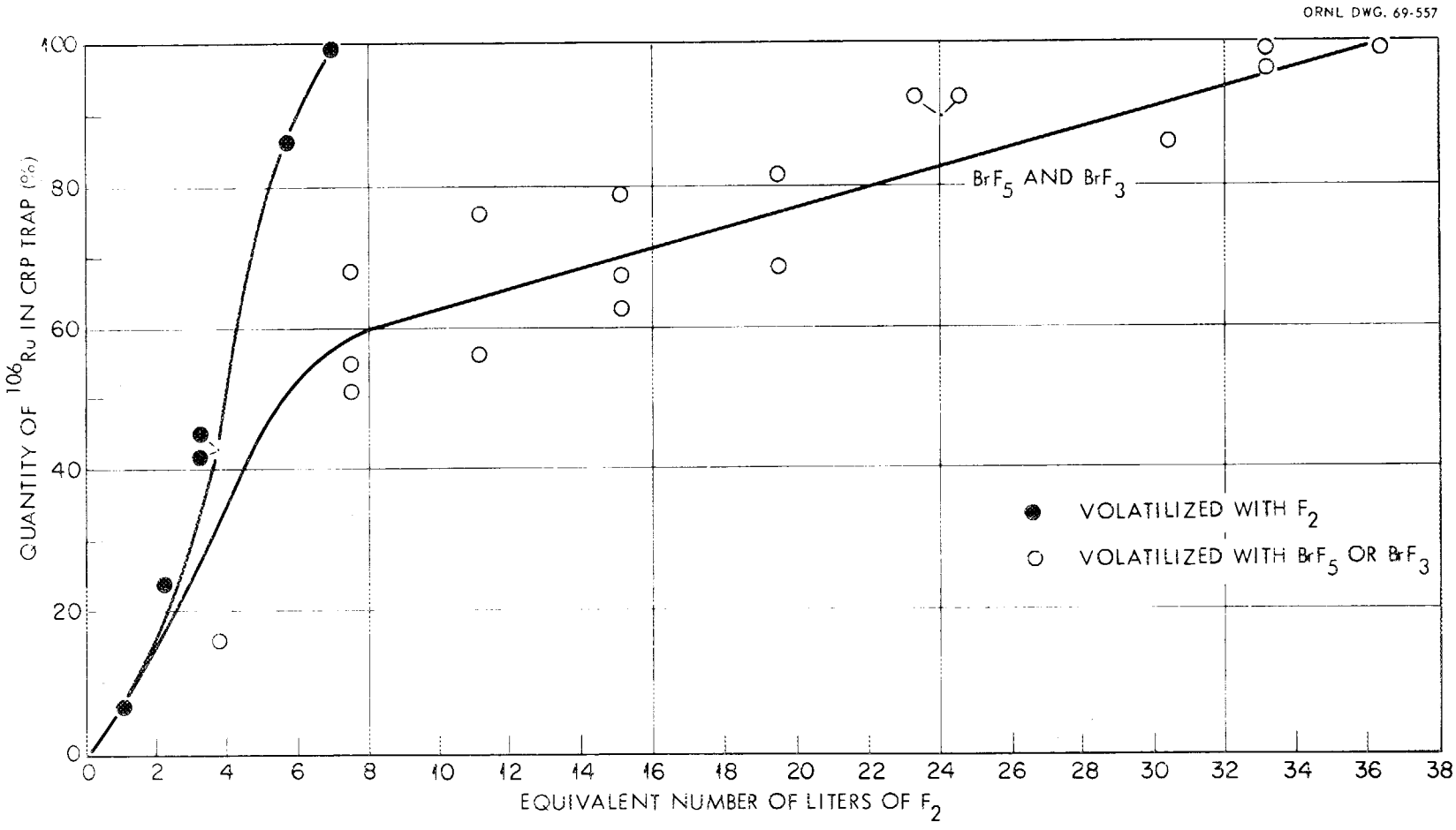

Fig. 9. Rate of Appearance of ^{106}Ru in CRP Trap After Volatilization with BrF_5, BrF_3, or F_2.

tested, the ruthenium activity reached its maximum very rapidly (see Fig. 9). With BrF_5, an initial rapid increase was followed by a slow linear increase. A likely explanation for the slow linear increase is the transpiration of a compound having a relatively low volatility. Assuming that this compound is RuF_5, the results indicate that the temperature of transpiration is about 55°C using the reported[4] vapor pressure of RuF_5 and knowing the weight of ruthenium being picked up by the trap. This temperature corresponds to that of the line between the fluidized-bed reactor and the CRP trap, and indicates that the RuF_5 is deposited there. These indications were confirmed by serious radiation damage to this line and by radiochemical analysis, which showed that, at the end of the volatilization step, about 20% of the total ruthenium could be found on the inside of the line. Visual observation showed that the line used during the all-fluorine test was only slightly discolored, indicating that only a small quantity of ruthenium was deposited in it. Therefore, it seems likely that treatment with BrF_5 produces a greater quantity of low-volatility ruthenium compounds than fluorine treatment does.

Fission product DF's for the CRP trap are listed in Table 3. In the first "hot" run (run 3) the DF's (except for cesium) were each about 2000. These values are quite high, considering that the residence time for the gas in contact with the 400°C NaF was only about 2.5 sec.

Table 3. Fission Product Decontamination Factors for the CRP Trap

	Decontamination Factors			
Run No.	Gross γ	Gross β	^{106}Ru	Cs
3	1790	2610	2000	2.2
4	6.1	5.8	6.4	~ 4.0
5	43	44	30	1.8
6	75	33	92	3.1

In later runs, despite the sampling precautions mentioned earlier, the DF's decreased significantly. The most likely explanation for the lower values is cross-contamination since all of the higher DF's decreased to about the same level. We believe that the DF's from the first hot run (No. 3) are "true" values (i.e., they are the values that could be expected in the absence of cross-contamination).

One undesirable result of the BrF_5 treatment was the small amount of plutonium found in the CRP trap in each run. Table 4 compares the percentage of the total plutonium found on this trap with the percentage of the total ^{90}Sr found there. It was felt that these quantities should be about equal since neither plutonium nor ^{90}Sr is expected to be volatilized by BrF_5. Surprisingly, the loss of plutonium is about ten times that of ^{90}Sr; one possible explanation for this is that the PuF_4 particles are considerably smaller than the SrF_2 particles and are, consequently, preferentially blown through the filter. The presence of plutonium in the CRP trap was confirmed by differential pulse-height analysis.

Table 4. Plutonium Entrainment, as Compared with ^{90}Sr Entrainment, by BrF_5-N_2 Stream

Run No.	^{90}Sr Transferred to CRP Trap (% of total ^{90}Sr)	Pu Transferred to CRP Trap (% of total Pu)	Pu/^{90}Sr Percentage Ratio
3	2.4×10^{-2}	0.4	17
4	1.4×10^{-2}	0.1	7
5	1.6×10^{-2}	0.14	9
6	3.0×10^{-2}	0.25	8

3.3 Desorption of Uranium

Desorption of the uranium was accomplished by connecting the main uranium sorption trap (T2) to a 400°C NaF polishing trap (T4), a 100°C MgF_2 trap (T5), and a cold trap cooled to −80°C. This arrangement is shown in Fig. 10. Fluorine was passed through the traps at the rate of about 100 ml/min. Reliable values for the fission product DF's for the sorption-desorption are not available because of the small quantities of fission products present and because of the cross-contamination problem mentioned previously. However, overall fission product DF's for the uranium product were obtained, and are listed in Table 5. It appears that DF's of about 10^6 are easily obtained for many contaminants with this process. Molybdenum was partially removed by virtue of its tendency not to cosorb with uranium during the BrF_5 volatilization step. The plutonium DF's are encouraging since they indicate that the uranium product could be treated as plutonium-free material during subsequent handling.

The technetium DF's for trap 5 are given in Table 6. Four-mesh MgF_2 from the Paducah Gaseous Diffusion Plant was used in the traps for runs 3 and 4. In run 5, we used 12- to 20-mesh material that had been prepared at ORNL by fluorinating $MgSO_4$. The smaller particles gave much better results, probably because of their greater external surface area. Contact time was about 15 sec.

The overall uranium material balances (see Table 7) were not satisfactory in all cases. Data in the table suggest that the difficulty may be caused by starting the hydrolysis at a low temperature. The explanation for the uniformly low material balances, except in the case of run 5, is not known.

3.4 Volatilization of PuF_6 with Fluorine

In the plutonium volatilization step, the fluidized bed was treated with elemental fluorine, as shown in Fig. 11, to form volatile PuF_6. In the cold tests and in the first two hot tests (runs 3 and 4), fluorination was started at 300°C. After sintering and actual ignition

ORNL DWG 69-93

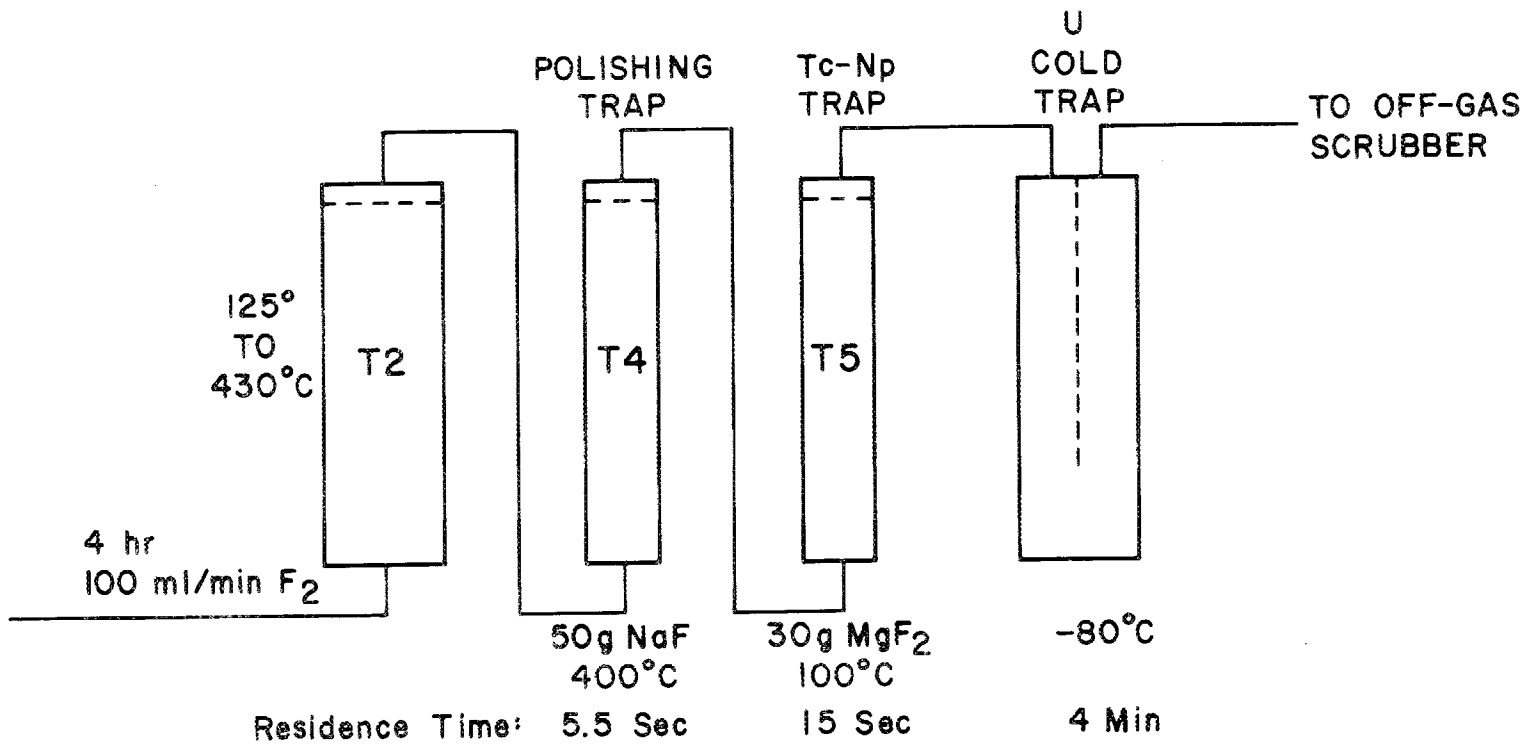

Fig. 10. Uranium Desorption Flowsheet.

Table 5. Overall Decontamination Factors for the Uranium Product

Run No.	Decontamination Factors								
	Gross γ	Gross β	^{106}Ru	Cs	^{90}Sr	Total Rare Earths	Tc	Mo	Pu
		$\times 10^4$	$\times 10^5$						$\times 10^6$
3	1.3×10^6	4.9	4.9	2.6×10^6	2.9×10^6	2×10^6	0.69	8.3	4
4	1.2×10^5	3.3	2	1.4×10^5	10^5	8×10^4	0.61	2.5	3
5	7.7×10^4	4.7	7.3	9.5×10^4	1.35×10^5		2.4	9.5	9.7

Table 6. Decontamination Factors for Technetium, Using a 100°C MgF_2 Trap (Trap 5)

Run No.	Tc DF	Mesh Size of MgF_2
3	1.09	~ 4
4	1.31	12 to 20
5	2.15	12 to 20

Table 7. Uranium Material Balances

Run No.	U Charged (g)	Amount U found (g)	Amount U found (%)	Cold Trap No.	Total for Cold Trap (%)	Initial Hydrolysis Temp. (°C)
1	29.6	26.6	90	1	90	30
3	27.2	20.4	75	2		−80
4	29.7	21.7	73	2	95.7	−80
5	28.0	39.2	140	2		30
6	26.7	24.9 ± 2	93.2 ± 7.5	None		No desorption
7	26.9	21.7 ± 0.6	80.7 ± 2.0	None		No desorption

ORNL DWG 69-1267

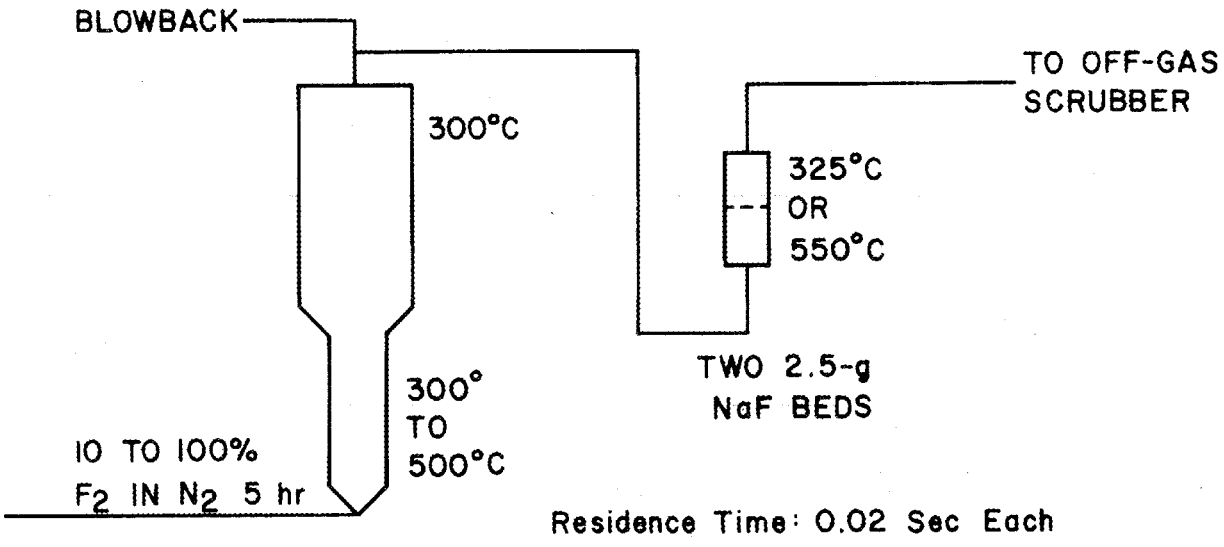

Fig. 11. Plutonium Volatilization Flowsheet.

of the alumina occurred in runs 3 and 4, respectively, conditions for this step were modified. In the later tests, fluorination was begun at about 200°C, with the fluorine concentration (in nitrogen) programmed from 10 to 50 vol %. The temperature was then increased to 300°C over about a 30-min period; 50 vol % F_2 was used. Next, the fluorine concentration was increased to 100% over a subsequent 30-min period. Finally, the temperature was raised to 500°C over a 1-hr period and maintained at 500°C for 2 hr. The total fluorination program required 5 hr, of which 3.5 hr was at a temperature of 300°C or greater. When this program was followed, no sintering of the alumina was observed.

Plutonium is readily removed from the fluorine stream by a very small NaF trap. In our experiments, a 2.5-g NaF trap at 550°C sorbed about 99.9% of the plutonium that reached it. The residence time for the gas was only about 0.02 sec.

The major fission product that cosorbed with the plutonium was ruthenium; after ruthenium, cesium was most important. The overall ruthenium and cesium DF's are shown in Table 8. The cesium DF is relatively high (about 10^4), and cesium could be easily separated from the plutonium during its removal from the NaF (possibly by dissolution of the NaF in anhydrous HF). Thus ruthenium is likely to be the most troublesome. As was mentioned earlier in connection with the interhalogen flowsheet, the amount of ruthenium that is cosorbed with the

Table 8. Overall Ruthenium and Cesium Decontamination Factors for Plutonium Product

Run No.	Temp. of Pu Trap (°C)	^{106}Ru (dpm/mg Pu)	Ru DF	Ratio of DF to DF in Run 3	$^{134,137}Cs$ (dpm/mg Pu)	Cs DF
3	325	2.67×10^8	76		6.7×10^7	273
4	325	1.21×10^9	17	0.22[a]	$\leq 2.7 \times 10^6$	$> 6.8 \times 10^3$
6	~ 550	3.85×10^6	5250	69[a]	1.8×10^6	10^4

[a]Ratios expected from the amount of ruthenium found and the difference in trap temperature: 0.306 (run 4) and 49 (run 6). (By Ref. 5)

plutonium can be easily reduced by extensive treatment of the fluidized bed with BrF_5. Another method for reducing the amount of cosorbed ruthenium would be to operate the plutonium sorption bed at a temperature that is unfavorable for ruthenium sorption; for example, it is known that ruthenium sorption on NaF decreases significantly at temperatures above 500°C.[5] However, in an experiment in which the NaF was heated to about 615°C, severe sintering was observed; this was probably the result of the formation of the NaF-PuF_4 eutectic. Thus, 550°C seems to be about the highest usable temperature. At 550°C, the ruthenium DF (6.0) achieved in the plutonium trap was four times that obtained at 325°C (1.5). Thus, for plutonium decontamination the best recommendation is to fluorinate for a fairly long period of time with BrF_5 and to operate the plutonium trap at about 550°C.

Plutonium material balances were not uniformly good (see Table 9). In run 1, which was a "cold" run, the exact plutonium content (262 mg) was known. A 93% material balance is considered acceptable for this quantity of plutonium. However, material balances for runs 3 and 4 are poor. No material balance is available for run 5 because the plutonium trap was lost. Material balances for runs 6 and 7 are quite satisfactory.

Table 9. Plutonium Material Balance[a]

Run No.	Pu Charged (mg)	Pu Found in Fluidized-Bed Reactor		Total Pu Found	
		mg	% of Pu Charged	mg	% of Pu Charged
1	262	6.6	2.5	244.1	93.2
3	355	70.4	18.9	282	79.4
4	388	22.9	5.6	302	77.8
6	349	104	28.4	396.7	113.7
7	352	208 ± 40	56.3 ± 11	333.3	94.5 ± 11

[a]Based on analyses of plutonium in fuel (11 mg of Pu per g of fuel) by J. Goode, except in run No. 1 where plutonium was weighed out.

All-Fluorine Flowsheet

An alternative to the interhalogen flowsheet is the all-fluorine flowsheet in which both the uranium and plutonium are volatilized, as UF_6 and PuF_6, by using fluorine. In one possible version of this flowsheet the plutonium is removed from the fluorine stream by a small high-temperature NaF trap located immediately behind the fluidized-bed reactor. The remaining gas passes through the traps for the uranium volatilization step, as discussed previously.

In the hot-cell test of this flowsheet, the plutonium trap was operated at about 620°C. Unfortunately, before the run was completed, this trap plugged, apparently due to the formation of a molten NaF-PuF_4 eutectic salt. At this point only about 35% of the plutonium had been volatilized; about two-thirds of the ^{106}Ru and almost all the uranium had been volatilized when the run was terminated. Based on this partial run, we can make the following statements:

(1) A more effective decontamination of plutonium from ruthenium was achieved than was expected..

(2) An overall ruthenium DF of 249 was obtained; about 200 of this value is attributable to nonsorption of ruthenium in the plutonium trap.

(3) Routine operation of the trap at 620°C would probably be difficult because of the plugging and sintering that would be encountered.

A previous run using the interhalogen flowsheet with a plutonium trap at about 550°C gave a ^{106}Ru DF of only about 4.0; whether the higher DF in the all-fluorine case is the result of the presence of a larger amount of ruthenium (about 60 mg as compared with about 0.6 mg) or to the higher temperature is not known.

3.5 Recovery of Plutonium from NaF Trap

After the PuF_6 is collected on NaF, the plutonium must be recovered from the complex that is formed. One possible method consists of aqueous dissolution followed by ion exchange treatment. Another method involves dissolution of the NaF with anhydrous HF, leaving PuF_4 as an insoluble residue; this treatment also gives a significant additional ruthenium DF. The second method was tested with the plutonium trap from run 6.[6] As a pretreatment the NaF was first fused in a platinium crucible at about 1050°C. A ruthenium DF of about 2 was obtained as a result of ruthenium plating on the crucible. [Use of a more-reactive crucible (e.g., nickel) would probably have given a higher DF.] When the NaF was dissolved in anhydrous HF, an additional ruthenium DF of 2.6 was obtained.

4. CONCLUSIONS

Based on the hot-cell work, the fluidized-bed volatility process appears to be chemically feasible. Care must be exercised at the start of the fluorination step to prevent sintering of the alumina bed. Larger equipment would probably present an even greater problem in this respect since the heat transfer would be less effective. Ruthenium contamination of the uranium product should be low since ruthenium DF's of about 10^6 were found in the hot-cell experiments. Ruthenium contamination of the plutonium product can be reduced by removing most of the ruthenium with the uranium during the BrF_5 treatment. A more effective separation of plutonium and ruthenium is achieved by operating the plutonium trap at about 550 to 580°C (instead of at 325°C).

5. REFERENCES

1. A. A. Chilenskas, Argonne National Laboratory, personal communication.

2. J. H. Goode, ORNL, unpublished data.

3. D. O. Rester, Co-op Student at ORNL from Mississippi State University, personal communication.

4. H. A. Bernhardt, et al., The Preparation of Ruthenium Pentafluoride and the Determination of Its Melting Point and Vapor Pressure, AECD-2390 (Nov. 1948).

5. E. D. Nogueira and G. I. Cathers, Sorption of Fission Product (Niobium, Ruthenium) Fluorides on Sodium Fluoride, ORNL-TM-2169 (in press).

6. Test performed by M. R. Bennett, ORNL.

DISTRIBUTION

Internal

1. R. E. Adams
2. G. M. Adamson
3. E. D. Arnold
4. M. R. Bennett
5. G. B. Berry
6. R. E. Blanco
7. J. O. Blomeke
8. E. S. Bomar
9. W. D. Bond
10. G. E. Boyd
11. R. A. Bradley
12. R. E. Brooksbank
13. K. B. Brown
14. F. R. Bruce
15. W. D. Burch
16. W. H. Carr
17. G. I. Cathers
18. W. L. Carter
19. J. M. Chandler
20. S. D. Clinton
21. C. F. Coleman
22. J. H. Coobs
23. L. T. Corbin
24. D. J. Crouse
25. F. L. Culler, Jr.
26. J. E. Cunningham
27. F. L. Daley
28. W. Davis, Jr.
29. D. E. Ferguson
30. L M. Ferris
31. B. C. Finney
32. R. B. Fitts
33. J. H. Frye, Jr.
34. F. J. Furman
35. J. H. Goode
36. A. T. Gresky
37. W. R. Grimes
38. W. S. Groenier
39. P. A. Haas
40. R. G. Haire
41. J. P. Hammond
42. W. O. Harms
43. C. C. Haws
44. D. E. Horner
45. F. J. Hurst
46. A. R. Irvine
47. F. A. Kappelmann
48. P. R. Kasten
49. A. H. Kibbey
50. F. J. Kitts
51. C. E. Lamb
52. J. M. Leitnaker
53. R. E. Leuze
54. C. S. Lisser
55. M. H. Lloyd
56. J. T. Long
57. A. L. Lotts
58. R. S. Lowrie
59. R. E. MacPherson, Jr.
60-62. J. C. Mailen
63. J. P. McBride
64. R. W. McClung
65. K. H. McCorkle
66. W. T. McDuffee
67. A. B. Meservey
68. R. P. Milford
69. J. G. Moore
70. L. E. Morse
71. J. P. Nichols
72. E. L. Nicholson
73. K. J. Notz
74. C. H. Odom
75. A. R. Olsen
76. J. R. Parrott
77. W. A. Pate
78. P. Patriarca
79. W. L. Pattison
80. W. H. Pechin
81. J. W. Prados
82. R. B. Pratt
83. R. H. Rainey
84. J. M. Robbins
85. M. W. Rosenthal
86. A. D. Ryon
87. J. M. Schmitt
88. J. L. Scott
89. J. D. Sease
90. L. B. Shappert
91. Moshe Siman-Tov
92. J. W. Snider

93. H. F. Soard
94. W. C. T. Stoddart
95. D. A. Sundberg
96. O. K. Tallent
97. E. H. Taylor
98. R. E. Thoma
99. D. B. Trauger
100. W. E. Unger
101. V. C. A. Vaughen
102. T. N. Washburn
103. C. D. Watson
104. A. M. Weinberg
105. J. R. Weir
106. M. E. Whatley
107. W. M. Woods
108. R. G. Wymer
109. O. O. Yarbro
110. Document Reference Section
111-113. Central Research Library
114-115. ORNL Y-12 Technical Library
116-118. Laboratory Records
119. Laboratory Records-RC
120. ORNL Patent Office
121. **Laboratory and University Div.**
122-136. DTIE

External

137. Librarian, AAEC, Res. Estb., Private Mail Bag, Sutherland, N.S.W., Australia, Attn: R. C. Cairns and L. Keher
138. AECL, Chalk River, Canada; Attn: C. A. Manson, I. L. Ophel
139. AERE, Harwell, England; Attn: H. J. Dunster
140. AERE, Harwell, England; Attn: J. R. Grover
141. AERE, Harwell, England; Library (Directorate)
142. AERE, Harwell, England; Chemistry Library, Attn: W. Wild
143. AERE, Harwell, England; Chemical Engineering Library, Attn: R. H. Burns, K. D. B. Johnson, W. H. Hardwick
144. A. Amorosi, ANL, LMFBR Program Office
145. R. H. Ball, RDT-OSR, P. O. Box 2325, San Diego, California 92112
146. R. G. Barnes, General Electric Company, 283 Brokaw Road, Santa Clara, California 95050
147. C. B. Bartlett, AEC, Washington
148. Franc Baumgartner, Professor fur Radiochemie, Universitat Heidelburg, Kernforschungszentrum, Karlsruhe, 75 Karlsruhe, Postfash 947, West Germany
149. W. G. Belter, AEC, Washington
150. D. E. Bloomfield, Pacific Northwest Laboratory, Richland, Washington
151. R. A. Bonniaud, Commissariat a L'Energie Atomique, Centra D'Etudes Nucleaires de Fontenay-aux-Roses, Boite Postale No. 6, Fontenay-aux-Roses, France
152. S. H. Brown, Manager, New Projects Dept., National Lead Company, 111 Broadway, New York, New York
153. J. A. Buckham, Idaho Nuclear Corp., Idaho Falls, Idaho
154. Leslie Burris, Jr., ANL
155. M. Benedict, Massachusetts Institute of Technology
156. Andre Chesne, Centre d'Etudes Nucleaire, Fontenay-aux-Roses, Seine, 90, France
157. C. W. Christenson, LASL
158. A. Chilenskas, Argonne National Laboratory
159. P. Clark, AEC, Washington
160. L. J. Colby, Jr., AEC, Washington

161. C. R. Cooley, Pacific Northwest Laboratory, P. O. Box 999, Richland, Washington
162. D. F. Cope, RDT Site Office (ORNL)
163. E. A. Coppinger, Pacific Northwest Laboratory, Richland, Washington
164. J. Crawford, AEC, Washington
165. G. W. Cunningham, AEC, Washington
166. C. B. Deering, AEC-ORO
167. Paul Dejonghe, CEN, Boeretang, 200, Mol, Belgium
168. W. Devine, Jr., Production Reactor Division, P. O. Box 550, Richland, Washington 99352
169. E. W. Dewell, Babcock & Wilcox, Lynchburg, Virginia
170. Stanley Donelson, Gulf General Atomic, P. O. Box 608, San Diego, California
171. Euratom, Casella Postale No. 1, Ispra, Italia; Attn: M. Lindner
172. Eurochemic, Mol, Belgium; Attn: Eurochemic Library
173. Yehuda Feige, Minister of Defense, AEC, Rehovoth, Israel
174. Philip Fineman, Argonne National Laboratory, East Area EBR-2, National Reactor Testing Station, Scoville, Idaho
175. S. Freeman, Mound Laboratory, Bldg. A, Room 155, Miamisburg, Ohio 45342
176. J. C. Frye, State Geological Survey Division, Urbana, Illinois
177. W. P. Gammill, AEC, Washington
178. Ray Garde, Los Alamos
179. R. M. Girdler, E. I. du Pont, SRL
180. Simcha Golan, Atomics International, Canoga Park, California
181. J. J. Goldin, Mound Laboratory, Bldg. A, Room 155, Miamisburg, Ohio 45342
182. A. J. Goldjohn, Gulf General Atomic, P. O. Box 608, San Diego, California
183. R. H. Graham, Gulf General Atomic, San Diego, California
184. J. S. Griffo, AEC, Washington
185. H. J. Groh, E. I. du Pont, Savannah River Laboratory
186. Norton Haberman, RDT, AEC, Washington
187. D. R. de Halas, Pacific Northwest Laboratory, Richland, Washington
188. P. S. Holstead, RDT-OSR, P. O. Box 550, Richland, Washington
189. C. H. Ice, E. I. du Pont, SRL
190. Michio Ichikawa, Tokai Refinery, Atomic Fuel Corp., Tokai-Mura, Ibaraki-Ken, Japan
191. C. J. Jouannaud, Fuel Reprocessing Plant, CEN, B.P. No. 106, 30-Bagrwls/cege, Marcoule, France
192. K. K. Kennedy, AEC, Idaho Operations Office, P. O. Box 2108, Idaho Falls, Idaho 83401
193. A. S. Kertes, The Hebrew University, Jerusalem, Israel
194. Gerard M. K. Klinke, Const. Dept., Min. of Fed. Property, Bad Godesberg, West Germany
195. Christian Josef Krahe, Scientific Member, Reprocessing Nuclear Fuels Section, Chemical Technology Division, Juelich Nuclear Research Center, Juelich, Germany
196. Leopold Kuchler, Farbwerke Hoechst AG, Frankfurt (M) Hoechst, Germany
197. W. J. Larkin, AEC-ORO
198. F. Laude, Commissariat a L'Energie Atomique, Centra D'Etudes Nucleaires de Fontenay-aux-Roses, Boite Postale No. 6, Fontenay-aux-Roses, France

199. S. Lawroski, Argonne National Laboratory
200. R. E. Lerth, Pacific Northwest Laboratory
201. W. H. Lewis, Vice President, Nuclear Fuel Services, Inc., Wheaton, Maryland 20902
202. T. McIntosh, AEC, Washington
203. H. A. C. McKay, UKAEA, Harwell, Berks, United Kingdom
204. W. H McVey, AEC, Washington
205. S. Marshall, National Lead Company of Ohio
206. A. R. Matheson, Gulf General Atomic, P. O. Box 608, San Diego, California
207. Ken Mattern, AEC, Washington
208. E. Lopez-Mechero, Eurochemic, Research Dept., Mol, Belgium
209. R. L. Morgan, AEC-SROO
210. R. I. Newman, Allied Chemical Corp., General Chemical Div., P. O. Box 405, Morristown, New Jersey 07960
211. Eduardo D. Nogueira, Seccion de Combustibles Irradiados, Junta de Energia Nuclear, Ciudad Universitaria, Madrid-3, Spain
212. R. E. Norman, ORNL (GGA employee)
213. Laboratory and University Division, ORO
214. D. A. Orth, E. I. du Pont, Savannah River Plant, Aiken, South Carolina
215. R. E. Pahler, AEC, Washington
216. F. L. Parker, Vanderbilt University, Nashville, Tennessee
217. N. Parkinson, Experimental Reactor Establishment, UKAEA, Dounreay, Scotland
218. Baldomero Lopez Perez, Doctor en Quimica Ind., Centro de Energia Nucl., Juan Vigon, Ciudad University, Madrid-3, Spain
219. R. L. Philippone, RDT, ORNL Site Rep., AEC
220. A. M. Platt, Pacific Northwest Laboratory, P. O. Box 999, Richland, Washington
221. W. H. Reas, General Electric Co., Vallecitos Laboratory, Pleasanton, California
222. W. H. Regan, AEC, Washington
223. P. J. Regnaut, CEN, Fontenay-aux-Roses, Paris, France
224. R. F. Reitemeier, AEC, Washington
225. C. W. Richards, AEC, Canoga Park, California
226. I. C. Roberts, AEC, Washington
227. Theodore Rockwell III, Chariman, AIF Safety Task Force, MPR Associates, Inc., 815 Connecticut Avenue, N.W., Washington, D. C. 20006
228. O. T. Roth, AEC, Washington
229. Bruce L. Schmalz, Atomic Energy Commission, P. O. Box 2108, Idaho Falls, Idaho 83401
230. A. Schneider, Allied Chemical Corp., Industrial Chemicals Div., P. O. Box 405, Morristown, New Jersey 07960
231. W. F. Schueller, Technical Manager, BMWF Scientific Research, 7501 Leopaldschafen, Karlsruhe, Germany
232. Harry S. Schneider, AEC, Washington
233. Giancarlo Scibona, Centro di Studi Nucleari della Casaccia, Rome, Italy
234. Jitender D. Sehgel, Bombay, India
235. M. Selman, Nuclear Materials and Equipment Corp., Apollo, Pennsylvania 15613

236. J. J. Shefcik, General Dynamics, San Diego, California
237. E. B. Sheldon, E. I. du Pont, SRL
238. Atou Shimozato, Nucl. Reac. Des. Sect., Nucl. Power Plant Dept., Hitachi Ltd., Hitachi Works, Hitachi-Shi Ibaraki-Ken, Japan
239. C. S. Shoup, AEC, ORO
240. E. E. Sinclair, AEC, Washington
241. W. L. Slagle, Water Reactor Safety Program Office, Phillips Petroleum Co., Idaho Falls, Idaho 83401
242. C. M. Slansky, Idaho Nuclear Corp., Idaho Falls, Idaho
243. Federico de Lora Soria, Grupo de Combustibles Irradiados, Junta de Energia Nucl., Div. de Mat., Ciudad University, Madrid-3, Spain
244. Narayanan Srivivasan, Head, Fuel Reprocessing Division, Bhabha Atomic Research Center, Bombay, India
245. F. Stelling, Gulf General Atomic, P. O. Box 608, San Diego, California 92112
246. C. E. Stevenson, Argonne National Laboratory
247. K. B. Steyer, Gulf General Atomic, P. O. Box 608, San Diego, California 92112
248. C. L. Storrs, Atomics International, Division of North American Aviation, Inc., P. O. Box 309, Canoga Park, California 91305
249. J. A. Swartout, Union Carbide Corporation, New York, New York
250. Jacob Tadmore, Israel Atomic Energy Commission, Soreq Nuclear Research Center, Yavne, Israel
251. X. L. Talmont, Plant of Irradiated Fuels Treatment, Centre de La Hague, Cherbourg, France
252. V. R. Thayer, E. I. du Pont, Wilmington, Delaware
253. K. T. Thomas, Atomic Energy Establishment, Trombay (Bombay), India
254. R. E. Tomlinson, Atlantic Richfield Co., Richland, Washington
255. L. B. Torobin, Standard Oil Company of New Jersey, 30 Rockefeller Plaza, Room 1711C, New York, New York 10020
256. C. A. Trilling, Atomics International, Div. of North American Aviation, Inc., P. O. Box 309, Canoga Park, California 91305
257. E. J. Tuthill, ANL
258. Director, Division of Naval Reactors, U. S. Atomic Energy Commission, Washington, D. C. 20545 Attn: R. S. Brodsky
259. R. P. Varnes, Combustion Engineering, Inc., Nuclear Division, P. O. Box 500, Windsor, Connecticut 06095
260. R. C. Vogel, Argonne National Laboratory
261. W. R. Voight, AEC, Washington
262. E. E. Voiland, Pacific Northwest Laboratory, Richland, Washington
263. R. D. Walton, Jr., AEC, Washington
264. B. F. Warner, UKAEA, Technical Dept., Windscale, Sellafield, Cumb., United Kingdom
265. M. J. Whitman, AEC, Washington
266. W. E. Winsche, Brookhaven National Laboratory
267. H. O. G. Witte, KFA-heisse zellen, Juelich, Germany
268. J. N. Wolfe, AEC, Washington
269. John Woolston, AECL, Chalk River, Canada
270. D. L. Ziegler, Dow Chemical Co., Rocky Flats Division, P. O. Box 888, Golden, Colorado 80401
271. M. Zifferero, Comitato Nazionale per L'Energie Nucleare, Via Belisaro, Rome, Italy
272. L. H. Meyer, E. I. du Pont, SRL