LOCKHEED MARTIN ENERGY RESEARCH LIBRARIES
3 4456 0513213 9

CENTRAL RESEARCH LIBRARY
DOCUMENT COLLECTION

OAK RIDGE NATIONAL LABORATORY
operated by
UNION CARBIDE CORPORATION
NUCLEAR DIVISION
for the
U.S. ATOMIC ENERGY COMMISSION

ORNL - TM - 2463

COPY NO. - 18

DATE - January 14, 1969

Instrumentation and Controls Division

DESCRIPTION OF PROCESS RADIATION MONITORING INSTRUMENTATION IN THE THORIUM-URANIUM RECYCLE FACILITY, BUILDING 7930

C. C. Hall D. J. Knowles

1. ABSTRACT

Radiation monitoring instrumentation was installed in the Thorium-Uranium Recycle Facility, Building 7930, to continuously monitor process areas, equipment, and waste (gaseous and liquid) as it is discharged from the facility.

A duct carrying cell ventilation air is monitored before the ventilation air reaches the HFIR stack. A drain line carrying liquid waste discharged from the facility is monitored before the liquid waste reaches the holding pond area. A recirculating water line is monitored to detect radioactivity in the recirculating water system. Background monitors were installed on the cell walls in the operating area to detect an increase in beta-gamma radiation and to warn operating personnel if the level becomes excessive.

These monitoring systems and system components are described in this report. Drawing references are also included.

OAK RIDGE NATIONAL LABORATORY
CENTRAL RESEARCH LIBRARY
DOCUMENT COLLECTION
LIBRARY LOAN COPY
DO NOT TRANSFER TO ANOTHER PERSON
If you wish someone else to see this document, send in name with document and the library will arrange a loan.
UCN-7969
(3 3-67)

NOTICE This document contains information of a preliminary nature and was prepared primarily for internal use at the Oak Ridge National Laboratory. It is subject to revision or correction and therefore does not represent a final report.

LEGAL NOTICE

This report was prepared as an account of Government sponsored work. Neither the United States, nor the Commission, nor any person acting on behalf of the Commission:

A. Makes any warranty or representation, expressed or implied, with respect to the accuracy, completeness, or usefulness of the information contained in this report, or that the use of any information, apparatus, method, or process disclosed in this report may not infringe privately owned rights; or

B. Assumes any liabilities with respect to the use of, or for damages resulting from the use of any information, apparatus, method, or process disclosed in this report.

As used in the above, "person acting on behalf of the Commission" includes any employee or contractor of the Commission, or employee of such contractor, to the extent that such employee or contractor of the Commission, or employee of such contractor prepares, disseminates, or provides access to, any information pursuant to his employment or contract with the Commission, or his employment with such contractor.

CONTENTS

Page

1. ABSTRACT 1

2. INTRODUCTION 4

3. GASEOUS WASTE MONITORING 4

3.1 Duct Monitor 4
3.2 Duct Flow Measurement 7

4. PROCESS WASTE DRAIN MONITOR 7

4.1 Sample Station 8
4.2 Alpha Monitor 8
4.3 Beta-Gamma Monitor 8
4.4 Backflush Control Panel 10
4.5 Sample Pump and Bottles 11

5. OPERATING AREA BACKGROUND MONITORS 11

5.1 Radiation Detectors and Count-Rate Meter 11
5.2 Audible Alarm 13

6. RECIRCULATING WATER GAMMA MONITOR 13

7. DRAWINGS 13

LOCKHEED MARTIN ENERGY RESEARCH LIBRARIES

3 4456 0513213 9

2. INTRODUCTION

Radiation monitors, separate from those installed in the facility radiation and contamination alarm system,[1] were installed at the Thorium-Uranium Recycle Facility (TURF). Four monitoring systems were installed as follows: (1) a gaseous waste monitor to continuously monitor the gaseous effluent discharged from the facility before it enters the High Flux Isotope Reactor (HFIR) stack, (2) a process-waste-drain monitor to continuously monitor liquid waste discharged from the facility before it reaches the holding pond area, (3) a background monitoring system to monitor beta-gamma background levels in the facility operating area and to warn operating personnel when hazardous background levels are reached, and (4) a radiation detector on a recirculating water line to detect gamma contamination in the recirculating water system.

3. GASEOUS WASTE MONITORING

The HFIR 250-ft tall stack is a common facility for discharging process waste gases to the atmosphere from the HFIR, the Transuranium Processing Plant (TRU), and the Thorium-Uranium Recycle Facility (TURF). Process waste gases discharged by the stack are continuously monitored at the 50-ft level of the stack.

The three plants discharge their process waste gases to the stack through separate ducts. Each duct is continuously monitored so that the plant responsible for discharging radioactive gases to the stack can be identified.

A 30-in. diameter duct transports waste gases from the TURF building to the stack. A duct monitor (Fig. 1) continuously monitors the gaseous effluent in the duct and transmits a "high-level" alarm signal to the Waste Monitoring Control Center (Building 3105) and to the TURF control room when the radiation level in the gaseous effluent becomes excessive.

3.1 Duct Monitor

A sample of gas in continuously withdrawn from the duct stream under approximately isokinetic conditions and pumped through the duct monitor[2] at 2.5 cfm by a

---

[1] C. C. Hall and D. J. Knowles, Description of Facility Radiation and Contamination Alarm System in the Thorium-Uranium Recycle Facility, Building 7930, ORNL-TM-2464 (to be published).

[2] The duct monitor is located south of Building 7930 and north of the exhaust fan pad.

Fig. 1. Cell Ventilation Duct Monitor.

Roots blower (Fig. 2). The gas sample is passed through a 2.5 x 1 in. section of Whatman No. 4 filter paper which removes more than 90% of the solid particles larger than 0.3 μ from the gas sample. The filter paper is supplied in rolls 3 in. wide and 145 ft long. A tape transport mechanism on the tape deck automatically advances the tape every 8 hr, and the tape can be advanced manually at the monitor or remotely from the Waste Monitoring Control Center at any time. The section of filter paper collecting the particulate sample is monitored for radioactivity by an end-window Geiger-Mueller (G-M) detector (a Lionel Electronic Laboratories, type 210T tube). The window thickness is 1.4 to 2 mg/cm^2 nominal; the window will pass beta particles with energies above 35 kev. The detector will detect bursts of radioactive gaseous material passing through, but not collected on, the filter paper. The G-M tube and sample collection point are contained inside a stainless steel shield which provides 2 in. of shielding in all directions except at openings for air flow and the paper-tape filter.

The G-M tube is connected to a linear duty-cycle count-rate meter (ORNL model Q-2313-9) with a high voltage supply as an integral part. A range of 0 to 250, 0 to 1000, 0 to 2500, 0 to 10,000, or 0 to 25,000 counts/min can be selected by means of a switch on the front panel. A voltage corresponding to the range switch position is telemetered to a range indicating meter in Building 3105. A 0- to 1-ma output signal from the count-rate meter drives an integrally mounted Rustrak recorder which records the count rate. This signal is also telemetered to and recorded in Building 3105. A high-level alarm set point on the count-rate meter can be set between

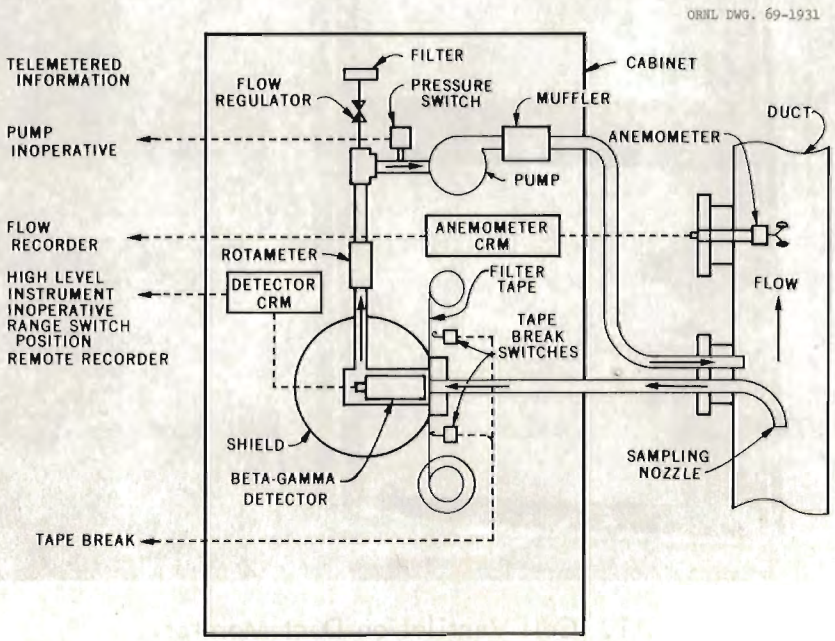

Fig. 2. Duct Monitor Diagram.

10 and 100% of full scale by adjusting the "high contact" pointer on the meter relay. The high-level alarm relay is de-energized below the set point, but when the high-level set point is reached, the meter contacts and relay are locked in and an alarm is annunciated in Buildings 7930 and 3105. The contacts and relay are periodically released to allow an automatic reset when the radiation level decreases below the set point.

The duct monitor provides alarm functions other than those previously mentioned. Failure of the Roots blower is detected by a vacuum switch which operates an alarm in Building 3105. Filter tape break indications are telemetered to and annunciated in Building 3105.

3.2 Duct Flow Measurement

An anemometer was installed in the duct to continuously measure the flow rate of the air stream in the duct.

The anemometer, a Belfort Instrument Co. model 14208, type C, produces an ac signal whose amplitude and frequency are proportional to the flow rate. The ac generator is connected to a telemetering transmitter (ORNL model Q-2714-1) located in the duct monitor cabinet. The transmitter determines the air velocity by measuring the frequency of the ac signal, and is calibrated to produce a dc output signal of 1 ma at 20,000 cfm.

4. PROCESS WASTE DRAIN MONITOR

The process waste drain monitor[3] (Fig. 3) removes liquid waste samples from the process waste sewer line and monitors the samples for alpha and beta-gamma radioactivities. The monitor operates diversion valves that automatically divert the waste discharge to a holding pond when radiation levels in the liquid waste exceeds tolerance. Liquid waste flow rates are also monitored.

Radiation levels and flow rates are telemetered to Building 3105 and recorded on multipoint recorders. Diversion valve positions are telemetered to Buildings 7930 and 3105 and indicated by incandescent lamps. Samples of water proportional to flow rate are continuously collected by the monitoring station for laboratory analysis.

---

[3] The process waste drain monitor is located at a manhole near the southwest corner of Building 7930.

4.1 Sample Station

Process waste water from Building 7930 flows through a 60° V-notch weir (sized for a maximum flow of 7,028 gal/hr) installed in a sewer manhole upstream from the diversion valve box (Fig. 4). The water depth is measured by a bubbler tube placed on the upstream side of the weir. The back-pressure of the water against air bubbled through the bubbler tube is converted to flow rate in gallons per hour by a pressure transducer and cam in a Bristol recorder. Air to the bubbler tube is supplied by an air compressor in the monitor cabinet.

A pump, which has a strainer on the inlet and is submerged in a reservoir on the upstream side of the weir, pumps approximately 1 gpm of water to the monitor cabinet. The water is then monitored for alpha and beta-gamma activities, and a water sample is withdrawn for laboratory analysis. After the water leaves the monitor cabinet, it is returned to the reservoir.

4.2 Alpha Monitor

The alpha monitor consists of an alpha scintillation detector assembly (ORNL model Q-2590) and a count-rate meter (ORNL model Q-2313-10) which has a high-voltage supply as an integral part.

The count-rate meter has a range switch on the front panel and a range of 0 to 250, 0 to 1000, 0 to 2500, 0 to 10,000, or 0 to 25,000 counts/min can be selected. The input sensitivity is 200 mv, and the overall accuracy of the meter, including long-term drift, is within 5% of the scale reading. The corona-regulated high-voltage supply is nominally 900 v with ±150 v adjustment. The count-rate meter provides a 0- to 1-ma output signal which drives an integrally mounted Rustrak recorder.

The high-level radiation alarm set point on the count-rate meter can be set between 10% and 100% of full scale by adjusting the "high contact" pointer on a contact-making meter. The meter relay is de-energized below the set point and is energized when the alpha contamination in the water exceeds tolerance. The meter relay transmits a signal to the backflush control panel (Sect. 4.4), which in turn operates the diversion valves.

4.3 Beta-Gamma Monitor

The beta-gamma monitor consists of a beta-gamma detector assembly (ORNL model Q-1907-13) and a count-rate meter (ORNL model Q-2313-10). The detector is a G-M tube (type 106-C); it is installed in a waterproof centrifuge tube which is immersed in water that constantly flows past the detector. The detector assembly is installed in a lead shield (ORNL model 1907-15) to reduce background radiation.

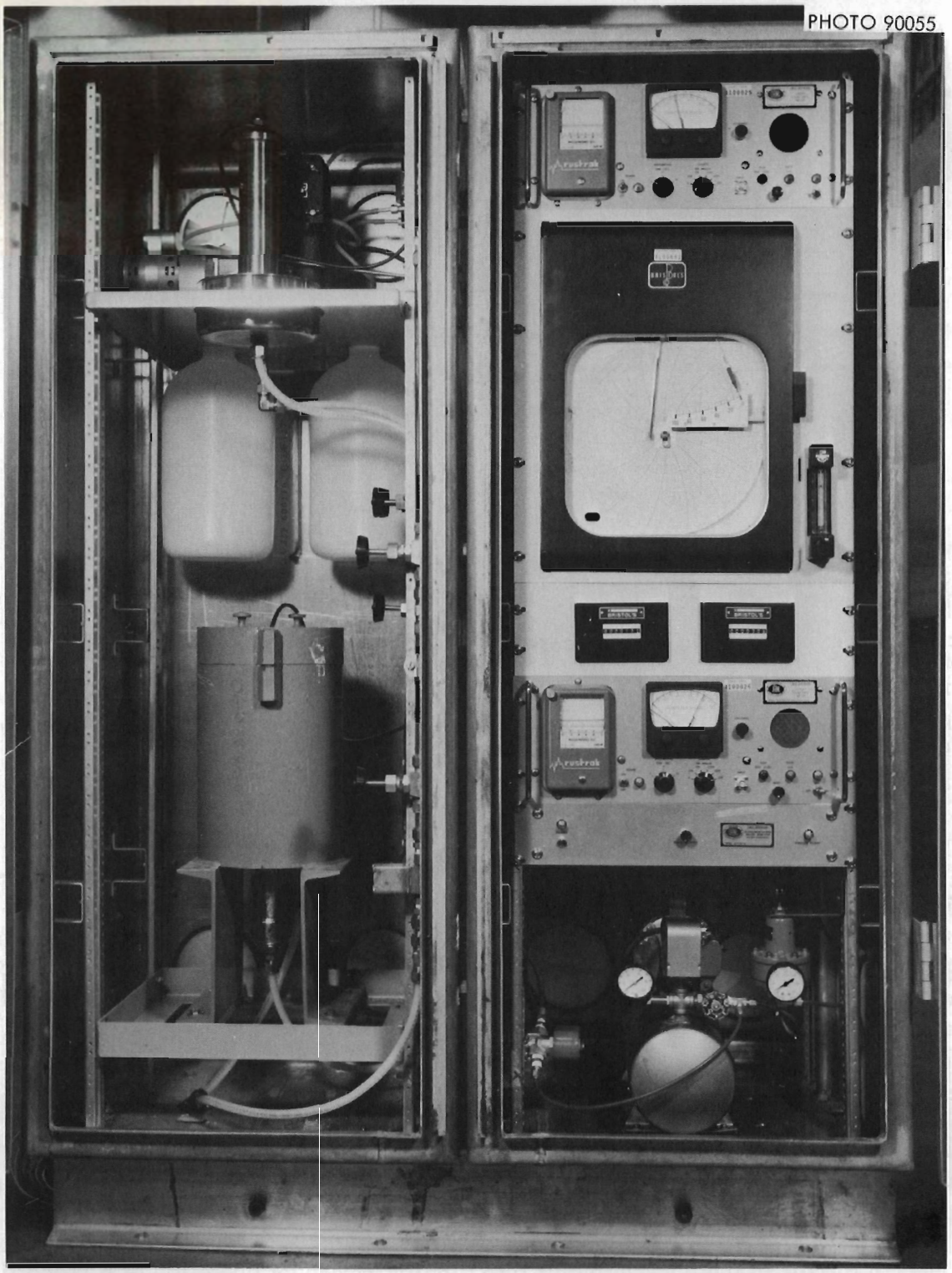

Fig. 3. Process Waste Drain Monitor.

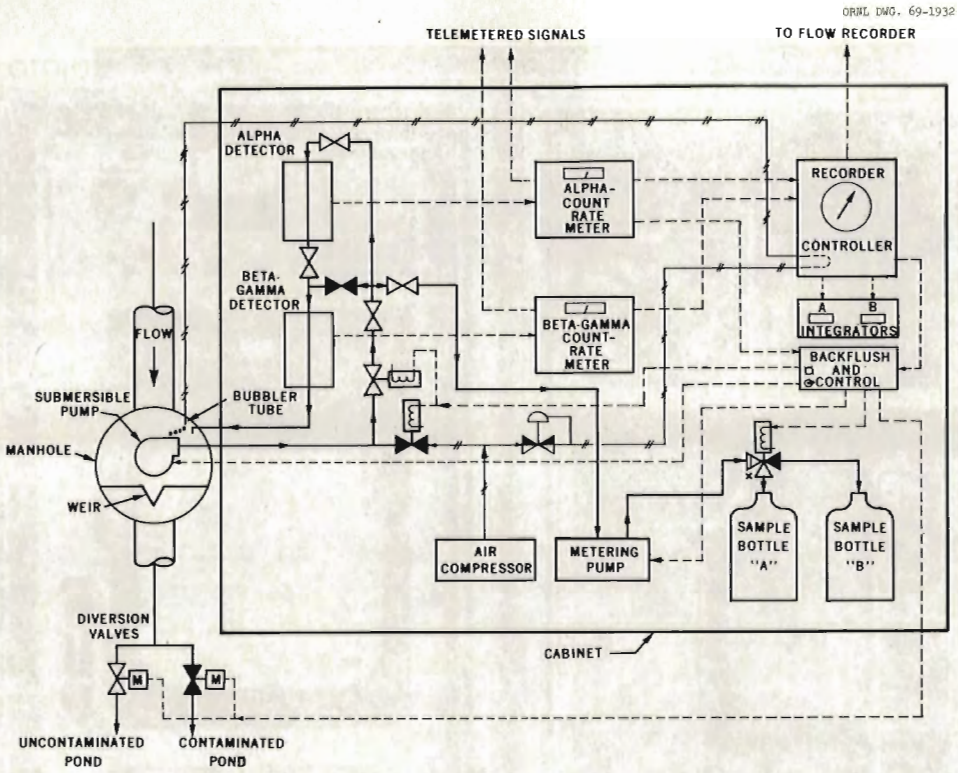

Fig. 4. Process Waste Monitor Diagram.

The G-M tube is connected to a count-rate meter (ORNL model Q-2313-10) described in Sect. 4.2.

4.4 Backflush Control Panel

The strainer on the submerged pump inlet, the submerged pump, and the sample inlet line to the monitor cabinet are cleaned once each hour as follows: the pump is stopped, two solenoid valves are electrically operated, and compressed air is blown through the inlet pipe, pump, and strainer in a direction opposite to the normal flow of water to expel materials collected in these components. A 1/8 rev/hr timer motor starts the backflush operation, and a 20-sec Amperite timer limits the backflush to 20 sec.

Two dc relays were installed in the backflush panel to operate diversion valves located downstream from the monitor cabinet. One relay is operated by the alpha count-rate meter and the other by the beta-gamma count rate meter when either type of radiation in the process waste water exceeds tolerance.

A circuit in the backflush unit also supplies power for operation of a proportional sample pump described in Sect. 4.5.

4.5 Sample Pump and Bottles

A water sample, proportional to the water flow rate through the weir, is collected in either of two bottles. One bottle collects the sample when radioactivity in the water is below tolerance, and the other bottle collects the sample when the radioactivity is above tolerance. A sample is withdrawn from the water being pumped through the monitor cabinet by a finger pump. The finger pump is controlled by a proportional signal from a Bristol recorder. Relay contacts in the recorder are operated on a 15-sec time-interval cycle. During a part of the 15-sec interval proportional to the flow rate through the weir, the relay contacts are closed and a 110-v ac signal is transmitted to operate the finger pump during this period. A dc voltage from the backflush panel to the finger pump prevents overrun when the ac signal is interrupted.

Two integrators mounted on a separate panel indicate the gallons of liquid waste discharged from the facility: one integrator indicates the amount discharged during normal conditions, and the other indicates the amount discharged when the radiation level of the waste is above tolerance. The integrators are operated by a relay in the Bristol recorder which is operated by the count-rate meters when the alpha or beta-gamma radiation level reaches the high-level set point.

5. OPERATING AREA BACKGROUND MONITORS

Beta-gamma background monitoring stations (Fig. 5) are provided at two locations, i.e., at the northeast and the southeast corners of the cell wall in the operating area. Each monitor receives signals from six beta-gamma detectors connected in parallel. The detectors are mounted at approximately equal intervals on the cell walls. The monitors have external audible alarms which may be acknowledged when a high-level background alarm signal is received.

5.1 Radiation Detectors and Count-Rate Meter

The radiation detectors are ORNL model Q-2152 G-M detector assemblies. Six of these assemblies are connected in parallel and monitored by a count-rate meter (ORNL model Q-2277) which has a 900-v power supply as an integral part. The count-rate meter has a switch on the front panel, and a range of 0 to 500, 0 to 1000, 0 to 2500, 0 to 5000, 0 to 10,000, or 0 to 25,000 counts/min can be selected. The panel meter is a contact-making meter with an adjustable high-level set pointer. The manually reset alarm circuit receives its energizing signal from the contact-making meter. A connector is provided on the rear of the chassis for a remote alarm output.

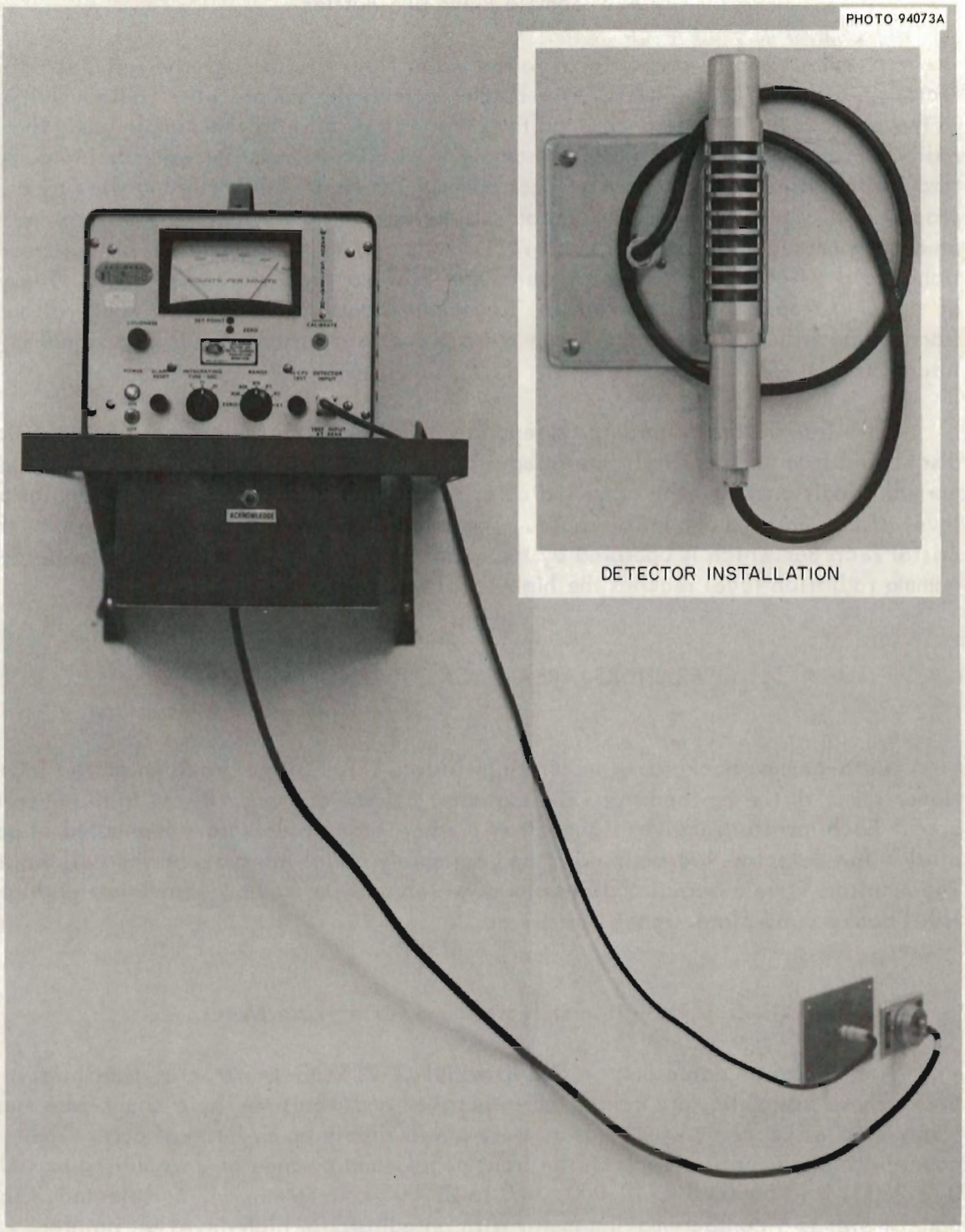

Fig. 5. Beta-Gamma Background Monitor.

5.2 Audible Alarm

The audible alarm instrument is mounted on the bottom of the instrument shelf and contains an Edwards bell and associated circuitry. The bell is operated when a high-radiation-level alarm signal is received from the count-rate meter. The bell can be silenced by pressing an acknowledgment button on the front of the alarm panel.

6. RECIRCULATING WATER GAMMA MONITOR

A gamma radiation monitor was provided to detect gamma activity in the recirculating water system. The monitor consists of a count-rate meter and a detector, which are described in Sect. 5.1. The detector, strapped to a pipe carrying recirculating water, detects an increase of gamma activity in the recirculating water.

7. DRAWINGS

The TURF process radiation monitoring instruments are described in the following ORNL Instrumentation and Controls Division drawings:

1.	I-20999-QS-Q-01 through -17	System Drawings
2.	Q-2563-1, -4, -15	Plug-in Modules
3.	Q-2277	Radiation Monitor
4.	Q-2313-10	Count-Rate Meter
5.	Q-2313-9	Count-Rate Meter
6.	Q-1907-13	Beta-Gamma Detector
7.	Q-2590-1	Alpha Detector
8.	Q-2325-5	Tape Drive Assembly
9.	Q-2714	Anemometer Count-Rate Meter
10.	Q-2587	Pump Assembly.

DISTRIBUTION

1- 2. J. D. Blanton
3. C. J. Borkowski
4. F. R. Bruce
5- 6. J. M. Chandler
7. C. C. Hall
8. C. S. Harrill
9. J. H. Holladay
10. T. W. Hungerford
11. W. H. Jordan
12-13. D. J. Knowles
14. C. S. Lisser
15. F. W. Manning
16. J. A. Russell
17. G. S. Sadowski
18-19. Central Research Library
20. Document Reference Section
21-22. Laboratory Records Department
23. Laobratory Records, ORNL R.C.
24. ORNL Patent Office
25-39. Division of Technical Information Extension
40. Laboratory and University Division, ORO