LOCKHEED MARTIN ENERGY RESEARCH LIBRARIES
3 4456 0513749 2

CENTRAL RESEARCH LIBRARY
DOCUMENT COLLECTION

OAK RIDGE NATIONAL LABORATORY
operated by
UNION CARBIDE CORPORATION
NUCLEAR DIVISION
for the
U.S. ATOMIC ENERGY COMMISSION

ORNL-TM-2633

1

# THEORETICAL ANALYSES OF SELECTED ELECTROMAGNETIC INDUCTION PROBLEMS

(Thesis)

Joseph Wilson Luquire, III

OAK RIDGE NATIONAL LABORATORY
CENTRAL RESEARCH LIBRARY
DOCUMENT COLLECTION
LIBRARY LOAN COPY
DO NOT TRANSFER TO ANOTHER PERSON
If you wish someone else to see this document, send in name with document and the library will arrange a loan.
UCN-7969
(3 3-67)

A Dissertation presented to the Graduate Council of The University of Tennessee in partial fulfillment of the requirements for the Degree Doctor of Philosophy.

## LEGAL NOTICE

This report was prepared as an account of Government sponsored work. Neither the United States, nor the Commission, nor any person acting on behalf of the Commission:

A. Makes any warranty or representation, expressed or implied, with respect to the accuracy, completeness, or usefulness of the information contained in this report, or that the use of any information, apparatus, method, or process disclosed in this report may not infringe privately owned rights; or

B. Assumes any liabilities with respect to the use of, or for damages resulting from the use of any information, apparatus, method, or process disclosed in this report.

As used in the above, "person acting on behalf of the Commission" includes any employee or contractor of the Commission, or employee of such contractor, to the extent that such employee or contractor of the Commission, or employee of such contractor prepares, disseminates, or provides access to, any information pursuant to his employment or contract with the Commission, or his employment with such contractor.

ORNL-TM-2633

Contract No. W-7405-eng-26

METALS AND CERAMICS DIVISION

# THEORETICAL ANALYSES OF SELECTED ELECTROMAGNETIC INDUCTION PROBLEMS

Joseph Wilson Luquire, III

---

A Dissertation
Presented to
the Graduate Council of
The University of Tennessee

---

In Partial Fulfillment
of the Requirements for the Degree
Doctor of Philosophy

SEPTEMBER 1969

OAK RIDGE NATIONAL LABORATORY
Oak Ridge, Tennessee
operated by
UNION CARBIDE CORPORATION
for the
U.S. ATOMIC ENERGY COMMISSION

LOCKHEED MARTIN ENERGY RESEARCH LIBRARIES

3 4456 0513749 2

ACKNOWLEDGMENTS

The author expresses his sincere appreciation to his major professor, Dr. William E. Deeds, and the other members of his committee for their help and encouragement during the course of this research. He also expresses his thanks to Dr. Caius V. Dodd and William G. Spoeri for their aid both during the course of this work and in preparing the final manuscript and, most of all, to his wife for her patience and understanding during his tenure in graduate school.

The author was privileged to perform this investigation at Oak Ridge National National Laboratory where the research was sponsored by the U. S. Atomic Energy Commission under contract with Union Carbide Corporation. Finally, deepest thanks to Maxine Potts for typing the final manuscript.

## ABSTRACT

The general theory for the vector potential produced by a sinusoidal current of finite cross section is developed and applied to several different current and conductor geometries: a coil between a number of conducting plates; a coil encircling two, concentric, spherical shells; and a straight wire between a number of conducting plates. Linear, isotropic and homogeneous media are assumed throughout each analysis. In each case the Green's function solution is first obtained, and the principle of superposition then used to effect the desired result. A number of physically observable phenomena, such as the impedance, the power loss due to the presence of the conductors, the time-averaged electromagnetic force on the conductors, et al., are subsequently calculated from the vector potential. Each case is sufficiently general to allow the solution of a considerable number of difficult electromagnetic induction problems, while each of the expressions obtained for the physically observable phenomena is in terms of an infinite integral or sum which may be readily evaluated on a computer. In all cases for which experimental measurements have been made, the agreement between calculated and observed values is within the limits of experimental error. Preliminary investigations of other cases tend to support the validity of the corresponding theoretical expressions.

TABLE OF CONTENTS


| CHAPTER | | PAGE |
|---|---|---|
| I. | INTRODUCTION | 1 |
| II. | GENERAL THEORY | 6 |
| | The Vector Potential | 6 |
| | The Induced Voltage | 11 |
| | The Mutual Inductance | 14 |
| | The Self Inductance | 15 |
| | The Dissipated Power | 17 |
| | The Electromagnetic Forces | 18 |
| | Defects in Conductors | 20 |
| III. | COIL BETWEEN CONDUCTING PLATES | 25 |
| | The Vector Potential of a Delta Function Current | 25 |
| | The Vector Potential of a Finite Current | 36 |
| | The Voltage Induced by a Finite Current | 46 |
| | The Impedance of a Finite Cross Section Coil | 52 |
| | The Power Dissipated by the Eddy Currents | 59 |
| | The Electromagnetic Forces on the Conductors | 62 |
| | Defects in the Conductors | 64 |
| IV. | COIL ENCIRCLING TWO CONCENTRIC SPHERICAL SHELLS | 67 |
| | The Vector Potential of a Delta Function Current | 67 |
| | The Vector Potential of a Finite Current | 73 |
| | The Voltage Induced by a Finite Current | 82 |

CHAPTER PAGE

The Impedance of a Finite Cross Section Coil . . . . . 84

The Power Dissipated by the Eddy Currents . . . . . 85

The Electromagnetic Forces on the Conductors . . . . . 86

Defects in the Conductors . . . . . 90

V. LONG WIRE BETWEEN CONDUCTING PLATES . . . . . 92

The Vector Potential of a Delta Function Current . . . . . 92

The Vector Potential of a Finite Current . . . . . 100

The Voltage Induced by a Finite Current . . . . . 106

The Impedance of a Finite Cross Section Wire . . . . . 109

The Power Dissipated by the Eddy Currents . . . . . 110

The Electromagnetic Forces on the Conductors . . . . . 113

VI. CONCLUSIONS . . . . . 116

LIST OF REFERENCES . . . . . 121

APPENDIX . . . . . 125

## LIST OF FIGURES


| FIGURE | | PAGE |
|---|---|---|
| 1. | A Rectangular Cross Section Coil | 10 |
| 2. | The Shape and Orientation Factor for a Spheroidal Defect | 23 |
| 3. | A Delta Function Current Between Conducting Plates | 26 |
| 4. | A Rectangular Cross Section Coil Between Conducting Plates | 37 |
| 5. | A Rectangular Cross Section Coil Above an Arbitrary Number of Conducting Plates | 55 |
| 6. | A Delta Function Current Encircling Two, Concentric, Spherical Shells | 68 |
| 7. | A Coil of Finite Cross Section Near Two, Concentric, Spherical Shells | 75 |
| 8. | Cross Section of a Delta Function Current Between Conducting Plates | 93 |

# CHAPTER I

## INTRODUCTION

If a wire, carrying a time dependent current, is placed near an electrical conductor, then electric currents are found to exist in the conductor. These currents are commonly called eddy currents and are said to be "induced" in the conductor by the current in the wire. The production of these induced eddy currents is due to a phenomenon called electromagnetic induction and depends upon parameters such as the electrical conductivity, magnetic permeability and dielectric constant of the conductor. Each of these parameters, in turn, depends upon the prior history of the conductor.

For example, the conductivity, permeability and dielectric constant of a conductor depend upon, among other things, whether or not the conductor has undergone heat treatment, cold working and/or irradiation. Furthermore, if the conductor has been treated with heat, cold worked and/or irradiated, then these parameters will depend upon the quantitative aspects of each process. In fact, the conductivity, permeability, and dielectric constant, and hence the production of induced eddy currents, are sensitive to almost any physical change in the conductor. Unfortunately, this sensitivity to almost any physical change makes the application of electromagnetic induction to the determination of various conductor properties quite difficult. An additional and more significant difficulty, even in the absence of this sensitivity to physical changes,

is the mathematical complexity of any attempted theoretical analysis. Nevertheless, the use of electromagnetic induction as a method of treating materials, though often somewhat less than quantitative, began more than ninety years ago when D. E. Hughes (1) used a pair of identical coils to sort various materials which were placed between them.

After the work of Hughes and others in the nineteenth century, theoretical and experimental work in the field of electromagnetic testing was practically nonexistent until the advent of World War II, at which time the Germans undertook a systematic study of electromagnetic testing. However, it was not until 1952 that electromagnetic testing received any wide recognition. In that year, F. Förster and his associates (2, 3, 4) published the first of an important series of papers in which they treated the cases of a coil above a conducting plane and an infinitely long solenoid containing a conducting core. In their treatment of a coil above a conducting plane, the coil was assumed to be a magnetic dipole for reasons of simplification. In 1956 Waidelich and Renken (5) used the method of images to obtain the coil impedance, which for high frequencies was in relatively good agreement with measured values. Several years later, in 1959, Hochschild (6) extended the treatment of an infinitely long solenoid containing a conducting core to include the eddy current distribution in the metal. At the same time, H. L. Libby (7) published a theoretical analysis of a coil above a conducting plane. His treatment differed from earlier work in that the coil was assumed to be a transformer with a network tied to the secondary. This network representation gave results which were quite

good when compared with experiment. Three years later, in a treatment by Russell et al. (8), the effects of placing a ferrite cup over the coil were considered by assuming the flux to be entirely coupled into the conductor. Although their theory was semiempirical, the relatively good agreement between calculated and measured values is worthy of note.

In the same year, 1962, P. R. Vein (9) presented a theory based on a single loop of infinitesimal cross section while, a year later, Atwood and Libby (10) were able to represent the diffusion of eddy current pulses in a manner analogous to Libby's earlier work. At the same time, C. V. Dodd and W. E. Deeds (11) presented a paper detailing relaxation methods for calculating the vector potential of a coil of finite cross section. In 1964, Cheng (12) was able to calculate the coil inpedance change due to the presence of the conducting plane. His treatment, like that of Vein's, was based on a single loop of infinitesimal cross section. M. L. Burrows (13), working from the same basis, developed a theory for calculating the change in induced voltage due to the presence of a flaw in the conducting plane. One year later, Dodd (14) extended the relaxation theory that he and Deeds had published earlier. In the early part of 1967, a report published by A. Philippe (15) detailed, among other things, the calculation of the impedance of a coil in the presence of a metal plate under pure alternating conditions. M. Onoe (16) , later in the same year, treated the cases of a coil between two conducting plates, a coil encircling an infinitely long rod and a coil inside an infinitely long tube. Although this treatment was of major importance, it fell short of being realistic since the

coils were assumed to be of infinitesimal thickness either in the axial or radial direction depending upon the specific case. In addition C. V. Dodd (17), a few months earlier, published a treatment of the first two cases in which results were obtained for a coil of finite cross section. In succeeding papers, Dodd and his co-workers (18, 19, 20, 21) extended the theory to include many other cases and developed computer programs to carry out the necessary calculations. This dissertation extends their theory still further and treats some cases that have not been treated heretofore.

For the induction problems considered here, the vector potential is chosen as the field vector that specifies the electromagnetic field of interest. Although the vector potential is somewhat easier to use than the $\vec{B}$ or $\vec{H}$ field vectors, this choice is not entirely one of convenience. The fact that the scalar potential is completely negligible makes the vector potential an adequate representative of the electromagnetic field. Solution of the differential equation for the vector potential of a delta function current will be obtained for various conductor geometries, and the principle of superposition will then be invoked to obtain solutions for currents of finite cross section. The differential equation for the vector potential [Eq. (2.1), page 6] has been derived from Maxwell's equations by Dodd (12). Linear, isotropic and homogeneous media and sinusoidal driving currents will be assumed in all cases. A number of physically observable phenomena, such as the impedance, the power loss due to the presence of the conductors, the effects of defects in the conductors, et al. will then be obtained from the vector potential.

The general theory for the vector potential, its superposition and the observable phenomena will be developed in the next chapter In succeeding chapters, this theory will be applied to several different current and conductor geometries: a coil between a number of conducting plates; a coil encircling two, concentric, spherical shells; and a straight wire between a number of conducting plates. The MKS system of units will be used in all cases. Note will be made where experimentally verified solutions, obtained elsewhere (18, 19, 20, 21), are special cases of the solutions obtained in this dissertation.

# CHAPTER II

## GENERAL THEORY

### The Vector Potential

The more orthodox methods for solving electromagnetic induction problems involve the use of $\vec{B}$ or $\vec{H}$ field vectors. However, we shall choose the vector potential, $\vec{A}$, as the field vector that specifies the electromagnetic field of interest. Once the vector potential for a given current distribution and conductor geometry is known, we may readily calculate any physically observable phenomenon from it. If we make use of the Coulomb gauge ($\nabla \cdot A = 0$), then for linear, isotropic, homogeneous media the differential equation for the vector potential is

$$\nabla^2 \vec{A} = -\mu \vec{i}_0 + \mu\sigma \frac{\partial \vec{A}}{\partial t} + \mu\varepsilon \frac{\partial^2 \vec{A}}{\partial t^2} , \tag{2.1}$$

where $\vec{i}_0$ is the source current density, $\mu$ is the permeability, $\sigma$ is the conductivity and $\varepsilon$ is the permittivity.

Since we shall be concerned with problems involving rectangular, cylindrical or spherical symmetry, it will be beneficial to express Eq. (2.1) in each of the pertinent coordinate systems. In rectangular coordinates (x, y, z), Eq. (2.1) becomes

$$\nabla^2 A_n = -\mu i_{0_n} + \mu\sigma \frac{\partial A_n}{\partial t} + \mu\varepsilon \frac{\partial^2 A_n}{\partial t^2} \quad (n = x, y, z) , \tag{2.2}$$

while in cylindrical coordinates (r, $\theta$, z), it becomes

$$\nabla^2 A_r - \frac{A_r}{r^2} - \frac{2}{r^2} \frac{\partial A_\theta}{\partial \theta} = -\mu i_{0_r} + \mu\sigma \frac{\partial A_r}{\partial t} + \mu\varepsilon \frac{\partial^2 A_r}{\partial t^2} \tag{2.3}$$

$$\nabla^2 A_\theta - \frac{A_\theta}{r^2} + \frac{2}{r^2}\frac{\partial A_r}{\partial \theta} = -\mu i_{0_\theta} + \mu\sigma \frac{\partial A_\theta}{\partial t} + \mu\varepsilon \frac{\partial^2 A_\theta}{\partial t^2} \tag{2.4}$$

$$\nabla^2 A_z = -\mu i_{0_z} + \mu\sigma \frac{\partial A_z}{\partial t} + \mu\varepsilon \frac{\partial^2 A_z}{\partial t^2} . \tag{2.5}$$

On the other hand, in spherical coordinates $(r, \theta, \phi)$, Eq. (2.1) is

$$\nabla^2 A_r - \frac{2}{r^2} A_r - \frac{2}{r^2 \sin\theta}\frac{\partial}{\partial\theta}(\sin\theta\, A_\theta) - \frac{2}{r^2\sin\theta}\frac{\partial A_\phi}{\partial\phi} =$$

$$- \mu i_{0_r} + \mu\sigma \frac{\partial A_r}{\partial t} + \mu\varepsilon \frac{\partial^2 A_r}{\partial t^2} \tag{2.6}$$

$$\nabla^2 A_\theta - \frac{A_\theta}{r^2\sin^2\theta} + \frac{2}{r^2}\frac{\partial A_r}{\partial\theta} - \frac{2\cos\theta}{r^2\sin^2\theta}\frac{\partial A_\phi}{\partial\phi} =$$

$$- \mu i_{0_\theta} + \mu\sigma \frac{\partial A_\theta}{\partial t} + \mu\varepsilon \frac{\partial^2 A_\phi}{\partial t^2} \tag{2.7}$$

$$\nabla^2 A_\phi - \frac{A_\phi}{r^2\sin^2\theta} + \frac{2}{r^2\sin\theta}\frac{\partial A_r}{\partial\phi} + \frac{2\cos\theta}{r^2\sin^2\theta}\frac{\partial A_\theta}{\partial\phi} =$$

$$-\mu i_{0_\phi} + \mu\sigma \frac{\partial A_\phi}{\partial t} + \mu\varepsilon \frac{\partial^2 A_\phi}{\partial t^2} , \tag{2.8}$$

where, of course, the Laplace operators must be expressed in the appropriate coordinates.

For the most part, Eqs. (2.2)-(2.8), particularly the latter ones, are quite complex; and thus any simplification would be welcome. Therefore, we shall assume the time dependence of the current density to be sinusoidal, which is not overly restrictive since any time-dependent

current may be expanded as a Fourier series in time. With this assumption, the vector potential will also vary sinusoidally with time. If we write $\vec{I}_0 = \vec{I}_0' e^{j\omega t}$ and $\vec{A} = \vec{A}' e^{j\omega t}$, then upon substitution in Eq. (2.2) we obtain

$$\nabla^2 A_n' e^{j\omega t} = -\mu i_{0_r}' e^{j\omega t} + j\omega\mu\sigma A_n' e^{j\omega t} - \omega^2 \mu\varepsilon A_n' e^{j\omega t} , \tag{2.9}$$

which we divide by $e^{j\omega t}$ and drop the primes to get

$$\nabla^2 A_n = -\mu i_0 + j\omega\mu\sigma A_n - \omega^2 \mu\varepsilon A_n . \tag{2.10}$$

Comparable results are obtained for the cylindrical and spherical coordinate cases simply by replacing $\partial/\partial t$ with $j\omega$ in Eqs. (2.3)-(2.8).

We shall make the further simplifying assumption that the current density is that of an infinitely thin wire carrying a current, I, which shall be referred to as a delta function current. In this case, the total vector potential produced at a point P by the superposition of n geometrically similar delta function currents may be written as

$$\vec{A}(P) = \sum_{i=1}^{n} \vec{A}_i(P). \tag{2.11}$$

If we let the delta function current, I, approach a continuous current distribution of density $i_0$, then the vector potential due to this current will also approach a continuous distribution. Denoting the density of this vector potential distribution by $A_0$, we can write the integral form of Eq. (2.11):

$$\vec{A}(P) = \iint \vec{A}_0(P)\ d(\text{area}), \tag{2.12}$$

where the integration is taken over the area through which the current passes.

Since $A_0(P)$ is proportional to $i_0$, it will prove useful for cases in which the delta function currents all have the same magnitude and phase to express Eq. (2.12) in terms of the current density. To this end, we multiply the integrand by $i_0/i_0$ and assume a uniform current density obtaining

$$\vec{A}(P) = i_0 \iint \frac{\vec{A}_0(P)}{i_0} \, d(\text{area}), \tag{2.13}$$

which for a straight wire of finite cross section may be written as

$$\vec{A}(P) = \frac{I}{(\text{cross section})} \iint \frac{\vec{A}_0(P)}{i_0} \, d(\text{area}), \tag{2.14}$$

where I is now the current in the wire and is related to $i_0$ by the approximation

$$i_0 = \frac{I}{(\text{cross section})} .$$

On the other hand, for a coil such as shown in Fig. 1, having n turns each carrying a current I

$$i_0 \approx \frac{nI}{(\text{coil area})} , \tag{2.16}$$

so that

$$\vec{A}(P) = \frac{nI}{(\text{coil area})} \iint \frac{\vec{A}_0(P)}{i_o} \, d(\text{area}). \tag{2.17}$$

Once the vector potential has been calculated for a particular delta function current and conductor configuration, the vector potential produced by a finite size current may be obtained simply by allowing the

ORNL-DWG 68-10309

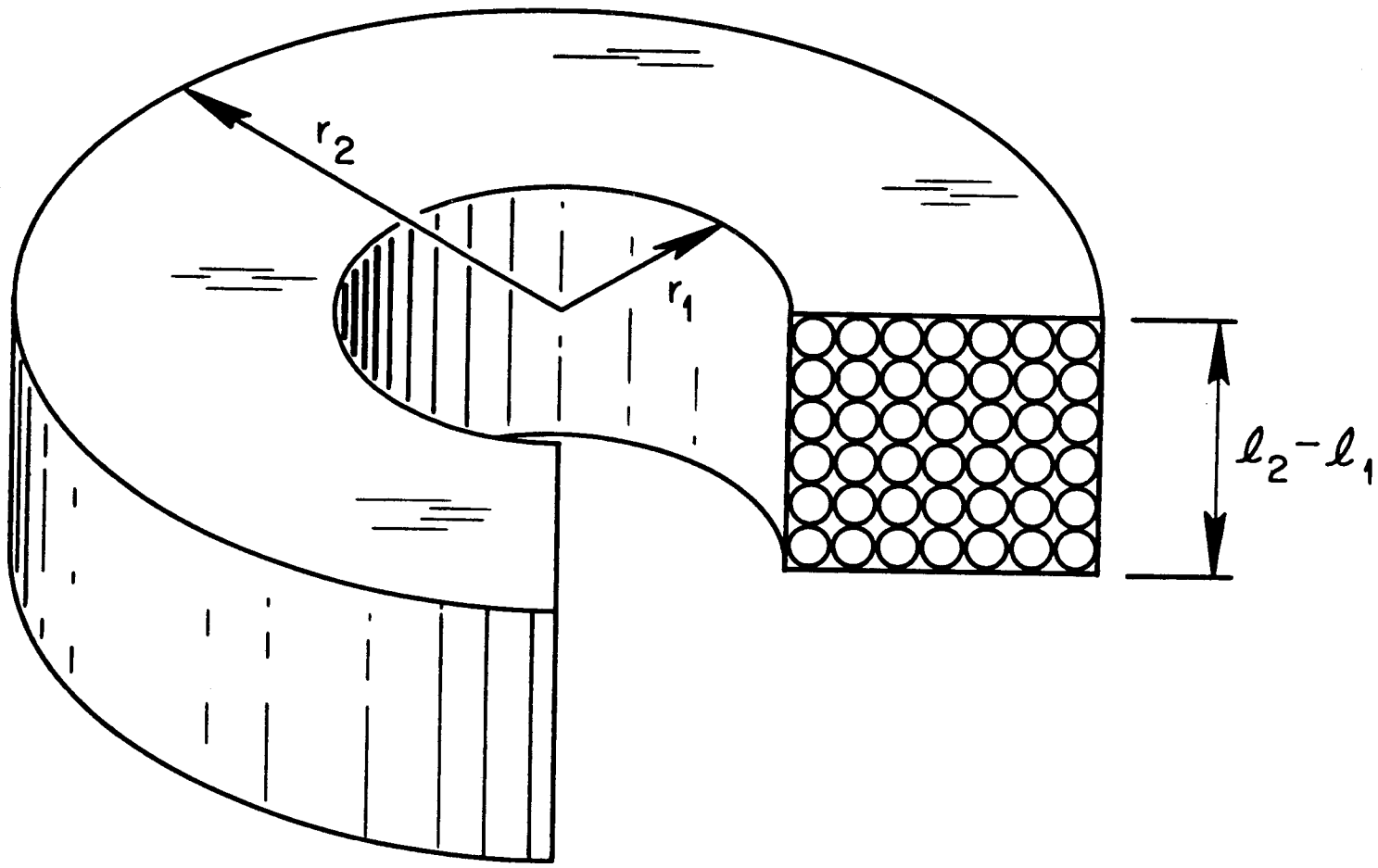


Figure 1. A rectangular cross section coil.

delta function current to approach the current density $i_0$ and making use of Eq. (2.14) or Eq. (2.17).

## The Induced Voltage

The voltage induced in a length of wire $d\vec{s}$ is given by

$$dV = -\vec{E}\cdot d\vec{s} \ , \tag{2.18}$$

where $\vec{E}$ is the electric field intensity. We may write Eq. (2.18) as

$$\frac{dV}{ds} = -E \cos \gamma \ , \tag{2.19}$$

where $\gamma$ is the angle between $\vec{E}$ and $d\vec{s}$. Now since

$$\vec{E} = -\frac{\partial \vec{A}}{\partial t} = -j\omega\vec{A} \ , \tag{2.20}$$

Eq. (2.19) becomes

$$\frac{dV}{ds} = j\omega A \cos \gamma \, . \tag{2.21}$$

Thus, for a straight wire parallel to $\vec{A}$, the voltage induced per unit length is

$$\frac{dV}{ds} = j\omega A. \tag{2.22}$$

Now for an axially symmetric coil with a single loop of radius r, Eq. (2.22) integrates to

$$V = j\omega 2\pi r A \ , \tag{2.23}$$

from which we deduce that the total voltage induced in a coil of n' turns is

$$V = j2\pi\omega \sum_{i=1}^{n'} r_i A_i \ . \tag{2.24}$$

If we assume the coil to have N' turns per unit cross sectional area, then we may approximate Eq. (2.24) by

$$V \approx j2\pi\omega \iint N' r A \, d(\text{area})' \ , \tag{2.25}$$

where the integral is taken over the cross section of the coil. For coils which have a constant N', Eq. (2.25) may be written as

$$V = \frac{j2\pi\omega n'}{(\text{coil area})'} \iint rA \, d(\text{area})' \ , \tag{2.26}$$

where n' is the number of turns on the coil. Inserting the vector potential from Eq. (2.17) in Eq. (2.26) yields

$$V = \frac{j2\pi\omega n n' I}{(\text{coil area})(\text{coil area})'} \iiiint r \frac{A_0(P)}{i_0} \, d(\text{area}) \, d(\text{area})' \tag{2.27}$$

for the voltage induced in a coil (with primed parameters) by a current, I, flowing in a coaxial coil. For the special case of the self induced voltage, Eq. (2.27) reduces to

$$V = \frac{j2\pi\omega n^2 I}{(\text{coil area})^2} \iiiint r \frac{A_0(P)}{i_0} \, d(\text{area}) \, d(\text{area})' \ , \tag{2.28}$$

where the areas of integration are identical.

Similar expressions may be derived for the case of a straight wire. From Eq. (2.22) we deduce that the total voltage induced per unit length in n' closely packed, parallel wires is

$$\frac{dV}{ds} = j\omega \sum_{i=1}^{n'} A_i \ . \tag{2.29}$$

If we assume that there are N' wires per unit cross sectional area, then we may approximate Eq. (2.29) by

$$\frac{dV}{ds} \approx j\omega \iint N' \, A \, d(\text{area}) \ , \tag{2.30}$$

where the integral is taken over the area through which the wires pass. For the case of a constant N', we may write

$$\frac{dV}{ds} = \frac{j\omega n'}{(\text{area})'} \iint A \, d(\text{area}) \ , \tag{2.31}$$

where n' is the number of wires and (area)' is the area through which the wires pass. Inserting the vector potential from Eq. (2.14) in Eq. (2.31) gives

$$\frac{dV}{ds} = \frac{j\omega n' I}{(\text{area})'(\text{cross section})} \iiiint \frac{A_0(P)}{i_0} \, d(\text{area}) \, d(\text{area})' \tag{2.32}$$

for the voltage induced per unit length in n' parallel wires by a current, I, flowing in a single wire. For the special case of the voltage induced in one wire by the current in another, Eq. (2.32) becomes

$$\frac{dV}{ds} = \frac{j\omega I}{(\text{cross section})'(\text{cross section})} \iiiint \frac{A_0(P)}{i_0} \, d(\text{area}) \, d(\text{area})' , \tag{2.33}$$

where the areas of integration are the cross sections of the two wires. The self induced voltage per unit length is obtained from Eq. (2.33) by integrating over the cross section of the wire twice.

## The Mutual Inductance

The voltage induced in a circuit (with primed parameters) by the current, I, flowing in another circuit is given by

$$V = M \frac{dI}{dt} = j\omega MI \ , \tag{2.34}$$

from which the mutual inductance, M, is

$$M = \frac{V}{j\omega I} \ . \tag{2.35}$$

Substitution of Eq. (2.27) in Eq. (2.35) gives

$$M = \frac{2\pi nn'}{(\text{coil area})(\text{coil area})'} \iiiint r \frac{A_0(P)}{i_0} \, d(\text{area}) \, d(\text{area})' \tag{2.36}$$

for the mutual induction of two coaxial coils.

For straight wires, Eq. (2.34) yields to the more appropriate form,

$$\frac{dV}{ds} = j\omega I \frac{dM}{ds} \ , \tag{2.37}$$

from which we see that the mutual inductance per unit length for two straight wires is

$$\frac{dM}{ds} = \frac{1}{j\omega I} \frac{dV}{ds} \ . \tag{2.38}$$

Substitution of Eq. (2.33) in Eq. (2.38) gives

$$\frac{dM}{ds} = \frac{1}{(\text{cross section})'(\text{cross section})} \iiiint \frac{A_0(P)}{i_0} \, d(\text{area}) \, d(\text{area})' \tag{2.39}$$

for the mutual inductance per unit length of two straight wires.

## The Self Inductance

Rather than start with the defining equation for self inductance and proceed to develop an expression for the self inductance of a coil, we recall that the self inductance is just a special case of the mutual inductance. In Eq. (2.36) we let the two coils be identically the same and drop the primes to get

$$L = \frac{2\pi n^2}{(\text{coil area})^2} \iiiint r \frac{A_0(P)}{i_0} \, d(\text{area}) \, d(\text{area})' , \qquad (2.40)$$

where the areas of integration are the same.

Similarly, for a straight wire, the self inductance per unit length is

$$\frac{dL}{ds} = \frac{1}{(\text{cross section})^2} \iiiint \frac{A_0(P)}{i_0} \, d(\text{area} \, d(\text{area})' , \qquad (2.41)$$

where the areas of integration are again the same.

## The Impedance

From the nondestructive testing point of view, the impedance of a coil is one of its most important characteristics. This impedance is a generalization of Ohm's law:

$$Z = \frac{V}{I} . \qquad (2.42)$$

Substituting Eq. (2.26) in Eq. (2.42) yields

$$Z = \frac{j2\pi\omega n}{(\text{coil area})I} \iint rA \, d(\text{area}) \qquad (2.43)$$

for the impedance of a coil. From a practical standpoint, the impedance of a coil in the presence of a conductor proves more useful if it is normalized by dividing by the magnitude of the impedance of the same coil in air. Thus we define the normalized impedance of a coil by the relation

$$Z_N = \frac{Z_{conductor}}{|Z_{air}|} , \tag{2.44}$$

in which we substitute Eq. (2.43) to obtain

$$Z_N = \frac{j \iint rA_{conductor}\, d(area)}{|\iint rA_{air}\, d(area)|} \tag{2.45}$$

for the normalized impedance of a coil in the presence of a conductor.

On the other hand, we can write Ohm's law as

$$\frac{dZ}{ds} = \frac{1}{I}\frac{dV}{ds} \tag{2.46}$$

for the case of a straight wire. Substituting Eq. (2.31) in Eq. (2.46) gives

$$\frac{dZ}{ds} = \frac{j\omega n}{(area)I} \iint A\, d(area) , \tag{2.47}$$

which is just the impedance per unit length. The normalized impedance per unit length of a straight wire in the presence of a conductor is defined in a manner analogous to Eq. (2.44):

$$\frac{dZ_N}{ds} = \frac{j \iint A_{conductor}\, d(area)}{|\iint A_{air}\, d(area)|} . \tag{2.48}$$

The Dissipated Power

We turn now to the calculation of the power loss due to the eddy currents that are induced in the conductor. For fields that vary sinusoidally with time, the time-averaged power loss per unit volume in the $k^{th}$ conductor can be written as

$$\frac{d\bar{P}_k}{dv} = \frac{1}{2}\,\vec{J}_k \cdot \vec{E}_k^* \,, \tag{2.49}$$

where the bar denotes an average over time. However, assuming as we have that Ohm's law,

$$\vec{J}_k = \sigma_k \vec{E}_k \,, \tag{2.50}$$

is true, the time-averaged power loss per unit volume may be written as

$$\begin{aligned} \frac{d\bar{P}_k}{dv} &= \frac{1}{2}\,\sigma_k\,\vec{E}_k \cdot \vec{E}_k^* \\ &= \frac{1}{2}\,\sigma_k\,|E_k|^2 \,. \end{aligned} \tag{2.51}$$

From Eq. (2.20), we have

$$\vec{E}_k = -j\omega\vec{A}_k \,, \tag{2.52}$$

so that

$$\frac{d\bar{P}_k}{dv} = \frac{1}{2}\,\sigma_k\omega^2\,|A_k|^2 \,. \tag{2.53}$$

With Eq. (2.53), the total time-averaged power loss in conductor k is

$$\bar{P}_k = \frac{1}{2}\,\sigma_k\omega^2 \iiint |A_k|^2\,dv \,, \tag{2.54}$$

where the integral is to be taken over the $k^{th}$ conductor. The total power loss due to all the conductors present is just

$$\bar{P} = \sum_k \bar{P}_k \ , \tag{2.55}$$

since the power loss is additive.

For straight wires, a more useful quantity is the total time-averaged power dissipated per unit length by the eddy currents in a conductor:

$$\frac{d\bar{P}_k}{ds} = \frac{1}{2} \sigma_k \omega^2 \iint |A_k|^2 \, d(\text{area}) \ , \tag{2.56}$$

where the area of integration is that through which the eddy currents pass. Of course, the total power loss per unit length due to all the conductors present is just

$$\frac{d\bar{P}}{ds} = \sum_k \frac{d\bar{P}_k}{ds} \ , \tag{2.57}$$

where the sum is over all conductors.

## The Electromagnetic Forces

Another quantity of extreme importance, particularly in the process of magnaforming, is the net force on a conductor. If we consider the permeability of each conductor to be spacially constant and neglect the radiation pressure, then the time-averaged force per unit volume exerted on the $k^{th}$ conductor is

$$\frac{d\vec{F}_k}{dv} = \frac{1}{2} \vec{J} \times \vec{B}^* \ , \tag{2.58}$$

for fields that vary sinusoidally with time. However, remembering that

$$\vec{B}_k = \nabla \times \vec{A}_k \tag{2.59}$$

and making use of Eq. (2.50), we can write Eq. (2.58) as

$$\frac{d\vec{F}_k}{dv} = \frac{1}{2}\,\sigma_k\,\vec{E}_k \times (\nabla \times \vec{A}_k)^* \ . \tag{2.60}$$

Substitution of Eq. (2.52) in Eq. (2.60) yields

$$\frac{d\vec{F}_k}{dv} = -\frac{1}{2}\,j\omega\sigma_k\,\vec{A}_k \times (\nabla \times \vec{A}_k^*) \ , \tag{2.61}$$

so that the total time-averaged force on conductor k is

$$\vec{F}_k = -\frac{1}{2}\,j\omega\sigma_k \iiint \vec{A}_k \times (\nabla \times \vec{A}_k^*)\,dv \ , \tag{2.62}$$

where the integral is to be taken over the $k^{th}$ conductor. The net force on all the conductors will, of course, be given by the vector sum of all the forces:

$$\vec{F} = \sum_k \vec{F}_k . \tag{2.63}$$

However, a much easier method of calculating the net force on all the conductors is to calculate the net force on the current carrying conductor and then invoke Newton's third law.

Again for straight wires, a more useful quantity is the total time-averaged force per unit length on a conductor:

$$\frac{d\vec{F}_k}{ds} = -\frac{1}{2}\,j\omega\sigma_k \iint \vec{A}_k \times (\nabla \times \vec{A}_k^*)\,d(\text{area}) \ , \tag{2.64}$$

where the area of integration is that through which the eddy currents pass. An expression similar to Eq. (2.63) also holds for the net force per unit length. For the sake of clarity, it is worth noting that both Eq. (2.62) and Eq. (2.64), in the general case, involve complex quantities so that when comparison with experiment is being effected only the real part of the force is of interest.

Defects in Conductors

The detection of a defect and the subsequent measurement of its size are of extreme interest in the field of nondestructive testing. M. L. Burrows (13) has promulgated a theory of eddy current flaw detection in which a small defect is approximated by the sum of a "current defect" and a "magnetic defect." Abrupt changes in the electrical conductivity and the magnetic permeability, respectively, give rise to these two types of conductor defects. The conditions imposed upon the size of the defect are that its dimensions be small when compared with the distance of the defect to the nearest conductor boundary and that it be sufficiently small for the incident field to be considered uniform over the defect.

When eddy currents are used to perform tests on conductors, one effect of a defect is to scatter the incident field. The first defect size restriction has the advantages that the defect will appear as a point source of the scattered field and only the dipole terms of the scattered fields will be significant. With this in mind, Burrows arrives at his Eq. (5.12) in which we substitute Eq. (2.52) and Eq. (2.59) to obtain

$$V_{2d} = \frac{3}{2} vI_1 \left[ \sigma \omega^2 \left( \frac{\vec{A}_2}{I_2} \right) \cdot \vec{\vec{\alpha}} \cdot \left( \frac{\vec{A}_1}{I_1} \right) - \frac{j\omega}{\mu} \left( \frac{\nabla \times \vec{A}_2}{I_2} \right) \cdot \vec{\vec{\beta}} \cdot \left( \frac{\nabla \times \vec{A}_1}{I_1} \right) \right] \tag{2.65}$$

for the voltage, due to the defect, induced in coil 2 by a current, I, flowing in coil 1. In this equation, $\vec{A}_k$ is the vector potential at the defect produced by a current, $I_k$, flowing in coil k; $\vec{\vec{\alpha}}$ and $\vec{\vec{\beta}}$ are the current and magnetic scattering matrices, respectively; and v is the volume of the defect.

Let us first consider current defects. In this case, the second term on the right hand side of Eq. (2.65) vanishes, and we write the remainder as

$$\frac{V_{2d}}{I_1} = \frac{3}{2} \sigma \omega^2 \left( \frac{\vec{A}_2}{I_2} \right) \cdot \left( v\vec{\vec{\alpha}} \right) \cdot \left( \frac{\vec{A}_1}{I_1} \right), \tag{2.66}$$

where the quantity $v\vec{\vec{\alpha}}$ depends only on the size, shape and orientation, with respect to the incident field, of the defect. The remainder of the right hand side of Eq. (2.66) depends only on the problem parameters, such as coil size and shape, frequency and conductivity, and will be referred to as the defect sensitivity factor.

If we specialize to the case of axially symmetric coils, Eq. (2.66) becomes

$$\frac{V_{2d}}{I_1} = \left[ v\alpha_{kk} \right] \left[ \frac{3}{2} \sigma \omega^2 \left( \frac{A_2}{I_2} \right) \left( \frac{A_1}{I_1} \right) \right] \tag{2.67}$$

where k = 2 in cylindrical coordinates and k = 3 in spherical coordinates. Since the quantity $\alpha_{kk}$ depends only on the shape and orientation of the

defect, it will be referred to as the current shape and orientation factor. If we assume a spheroidal defect, as shown in Fig. 2, we have

$$\alpha_{kk} = \alpha_2 \cos^2\phi + \alpha_T \sin^2\phi \tag{2.68}$$

where $\phi$ is the angle between the $\theta$ direction and the symmetry axis of the spheroid. The quantities $\alpha_L$ and $\alpha_T$ are defined by the relations (13)

$$\alpha_L = \frac{2}{3}\,[1-\sigma_d/\sigma](1-[1-\sigma_d/\sigma][\xi^2-1][\frac{\xi}{2}\ln\left(\frac{\xi+1}{\xi-1}\right)-1])^{-1} \tag{2.69}$$

for $b/a < 1$

$$\alpha_L = \frac{2}{3}\,[1-\sigma_d/\sigma](1-[1-\sigma_d/\sigma][\xi^2+1][1-\xi\tan^{-1}(1/\xi)])^{-1} \tag{2.70}$$

for $b/a > 1$

$$\alpha_T = \frac{4}{3}\,[1-\sigma_d/\sigma](2-[1-\sigma_d/\sigma]\xi[\xi-\frac{1}{2}(\xi^2-1)\ln\left(\frac{\xi+1}{\xi-1}\right)])^{-1} \tag{2.71}$$

for $b/a < 1$

$$\alpha_T = \frac{4}{3}\,[1-\sigma_d/\sigma](2+[1-\sigma_d/\sigma][\xi^2-\xi(1+\xi^2)\tan^{-1}(1/\xi)])^{-1} \tag{2.72}$$

for $b/a > 1$

where

$\xi = |1-(b/a)^2|^{-1/2}$ = asymmetry parameter,

$a$ = symmetry semiaxis,

$b$ = semiaxis perpendicular to symmetry axis,

$\sigma$ = electrical conductivity of metal,

$\sigma_d$ = electrical conductivity of defect.

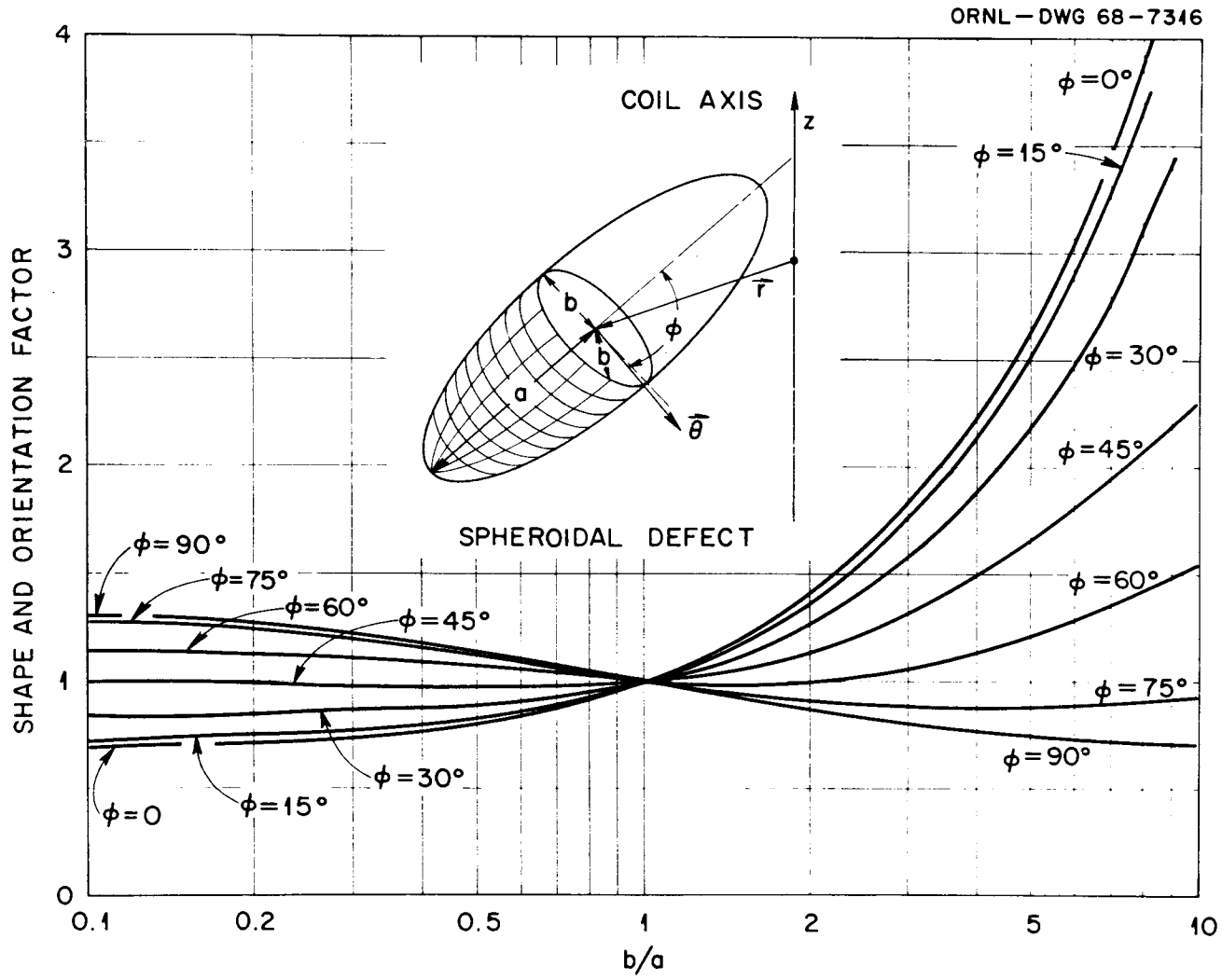


Figure 2. The shape and orientation factor for a spheroidal defect.

Frequently, the electrical contact between the defect and the surrounding medium is less than perfect which results in an effective defect conductivity of zero. Figure 2 shows the behavior of the current shape and orientation factor for non-conducting spheroids of various orientations as a function of the ratio b/a. If we let a approach zero, the spheroid becomes a flat disk of radius b; and its volume $(4\pi b^2 a/3)$ approaches zero in such a way that the product $v\alpha_{kk}$ approaches the value

$$v\alpha_{kk} = \frac{16b^3}{9} \cos^2 \phi \ , \tag{2.73}$$

since $\alpha_T$ approaches zero and $\alpha_L$ approaches infinity.

For defects of other shapes, there exist equations similar to Eq. (2.68) and the subsequent ones; thus we can calculate the effect of a defect in a conductor. It is also worth noting that, when the two coils are the same, Eq. (2.67) is just the impedance change due to the defect, which is relatively easy to measure.

## CHAPTER III

## COIL BETWEEN CONDUCTING PLATES

### The Vector Potential of a Delta Function Current

A circular, delta function current having several parallel, conducting plates both above and below it is shown in Fig. 3. Due to the inherent axial symmetry, we choose to use cylindrical coordinates in solving the problem. Since the current flows only in the $\theta$ direction, the r and z components of the vector potential vanish. Perusal of Eqs. (2.3)-(2.5) shows us that the vector potential must thus be a solution of Eq. (2.4). Replacing $\partial/\partial t$ with $j\omega$ and writing the Laplace operator in cylindrical coordinates, this equation becomes

$$\frac{\partial^2 A}{\partial r^2} + \frac{1}{r}\frac{\partial A}{\partial r} + \frac{\partial^2 A}{\partial z^2} - \frac{A}{r^2} - j\omega\mu_i\sigma_i A + \omega^2\mu_i\varepsilon_i A + \mu I\delta(r-r_0)\delta(z-z_0) = 0, \tag{3.1}$$

where A is the $\theta$ component of the vector potential and where the last term on the left side vanishes expect at $r = r_0$, $z = z_0$.

Equation (3.1) is amenable to solution by the method of separation of variables which yields the general solution

$$A(r,z) = \int_0^\infty [a(\alpha)e^{-\alpha_i z} + b(\alpha)e^{\alpha_i z}][J_1(\alpha r) + c(\alpha)\, Y_1(\alpha r)]\, d\alpha\ , \tag{3.2}$$

where

$$\alpha_i \equiv \left[\alpha^2 - \omega^2\mu_i\varepsilon_i + j\omega\mu_i\sigma_i\right]^{1/2} \tag{3.3}$$

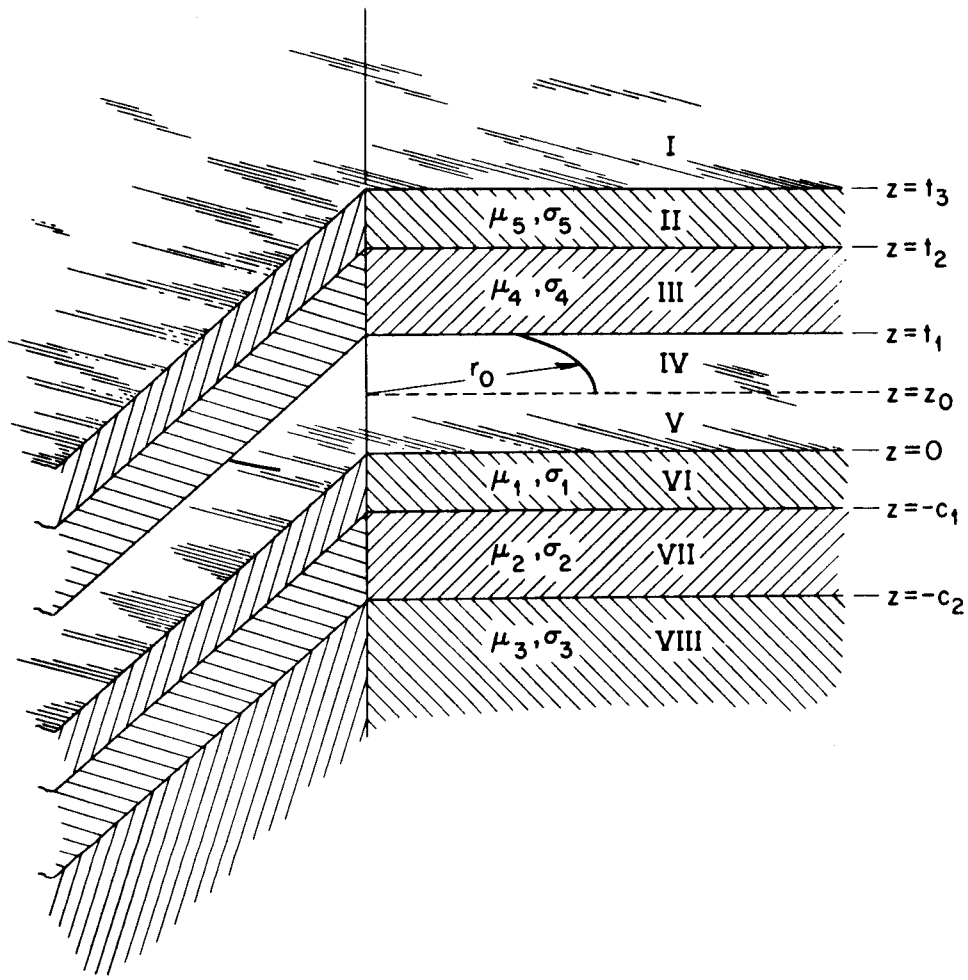


Figure 3. A delta function current between conducting plates.

and $J_1(\alpha r)$ and $Y_1(\alpha r)$ are the first order Bessel functions of the first and second kind, respectively. We shall require the vector potential to remain finite at $r = 0$, $r = \infty$ and $z = \pm\infty$ so that $c(\alpha) = 0$ in all regions while $a(\alpha) = 0$ in region VIII and $b(\alpha) = 0$ in region I. Thus the solutions for the various regions are

$$A^{(1)}(r,z) = \int_0^\infty a_1(\alpha)e^{-\alpha_0 z} J_1(\alpha r)\, d\alpha \,, \tag{3.4}$$

$$A^{(2)}(r,z) = \int_0^\infty [a_2(\alpha)e^{-\alpha_5 z} + b_2(\alpha)e^{\alpha_5 z}]\, J_1(\alpha r)\, d\alpha \,, \tag{3.5}$$

$$A^{(3)}(r,z) = \int_0^\infty [a_3(\alpha)e^{-\alpha_4 z} + b_3(\alpha)e^{\alpha_4 z}]\, J_1(\alpha r)\, d\alpha \,, \tag{3.6}$$

$$A^{(4)}(r,z) = \int_0^\infty [a_4(\alpha)e^{-\alpha_0 z} + b_4(\alpha)e^{\alpha_0 z}]\, J_1(\alpha r)\, d\alpha \,, \tag{3.7}$$

$$A^{(5)}(r,z) = \int_0^\infty [a_5(\alpha)e^{-\alpha_0 z} + b_5(\alpha)e^{\alpha_0 z}]\, J_1(\alpha r)\, d\alpha \,, \tag{3.8}$$

$$A^{(6)}(r,z) = \int_0^\infty [a_6(\alpha)e^{-\alpha_1 z} + b_6(\alpha)e^{\alpha_1 z}]\, J_1(\alpha r)\, d\alpha \,, \tag{3.9}$$

$$A^{(7)}(r,z) = \int_0^\infty [a_7(\alpha)e^{-\alpha_2 z} + b_7(\alpha)e^{\alpha_3 z}]\, J_1(\alpha r)\, d\alpha \,, \tag{3.10}$$

$$A^{(8)}(r,z) = \int_0^\infty b_8(\alpha)e^{\alpha_3 z} J_1(\alpha r)\, d\alpha \,, \tag{3.11}$$

where the superscripts refer to specific regions and

$$\alpha_0 = \left[\alpha^2 - \frac{\omega^2}{c^2}\right]^{1/2} \,, \tag{3.12}$$

since regions I, IV and V are taken to be air.

Now the boundary conditions are

$$A^{(1)}(r,t_3) = A^{(2)}(r,t_3) \ , \tag{3.13}$$

$$\left.\frac{\partial A^{(1)}}{\partial z}\right]_{z=t_3} = \frac{1}{\mu_5}\left.\frac{\partial A^{(2)}}{\partial z}\right]_{z=t_3} \ , \tag{3.14}$$

$$A^{(2)}r,t_2) = A^{(3)}(r,t_2) \ , \tag{3.15}$$

$$\frac{1}{\mu_5}\left.\frac{\partial A^{(2)}}{\partial z}\right]_{z=t_2} = \frac{1}{\mu_4}\left.\frac{\partial A^{(3)}}{\partial z}\right]_{z=t_2} \ , \tag{3.16}$$

$$A^{(3)}(r,t_1) = A^{(4)}(r,t_1) \ , \tag{3.17}$$

$$\frac{1}{\mu_4}\left.\frac{\partial A^{(3)}}{\partial z}\right]_{z=t_1} = \left.\frac{\partial A^{(4)}}{\partial z}\right]_{z=t_1} \ , \tag{3.18}$$

$$A^{(4)}(r,z_0) = A^{(5)}(r,z_0) \ , \tag{3.19}$$

$$\left.\frac{\partial A^{(4)}}{\partial z}\right]_{z=z_0} = \left.\frac{\partial A^{(5)}}{\partial z}\right]_{z=z_0} - \mu I\delta(r-r_0) \ , \tag{3.20}$$

$$A^{(5)}(r,0) = A^{(6)}(r,0) \ , \tag{3.21}$$

$$\left.\frac{\partial A^{(5)}}{\partial z}\right]_{z=0} = \frac{1}{\mu_1}\left.\frac{\partial A^{(6)}}{\partial z}\right]_{z=0} \ , \tag{3.22}$$

$$A^{(6)}(r,-c_1) = A^{(7)}(r,-c_1) \ , \tag{3.23}$$

$$\frac{1}{\mu_1}\left.\frac{\partial A^{(6)}}{\partial z}\right]_{z=-c_1} = \frac{1}{\mu_2}\left.\frac{\partial A^{(7)}}{\partial z}\right]_{z=-c_1} \ , \tag{3.24}$$

$$A^{(7)}(r,-c_2) = A^{(8)}(r,-c_2) \ , \tag{3.25}$$

$$\frac{1}{\mu_2}\frac{\partial A^{(7)}}{\partial z}\Big]_{z=-c_2} = \frac{1}{\mu_3}\frac{\partial A^{(8)}}{\partial z}\Big]_{z=-c_2} \ . \tag{3.26}$$

Substitution of Eqs. (3.4)-(3.11) in Eqs. (3.13)-(3.26) yields

$$\int_0^\infty a_1(\alpha)e^{-\alpha_0 t_3} J_1(\alpha r)d\alpha = \int_0^\infty [a_2(\alpha)e^{-\alpha_5 t_3} + b_2(\alpha)e^{\alpha_5 t_3}] J_1(\alpha r)\, d\alpha \ , \tag{3.27}$$

$$-\int_0^\infty \alpha_0 a_1(\alpha)e^{-\alpha_0 t_3} J_1(\alpha r)d\alpha = -\int_0^\infty \beta_5[a_2(\alpha)e^{-\alpha_5 t_3} - b_2(\alpha)e^{\alpha_5 t_3}]J_1(\alpha r)\, d\alpha \ , \tag{3.28}$$

$$\int_0^\infty [a_2(\alpha)e^{-\alpha_5 t_2} + b_2(\alpha)e^{\alpha_5 t_2}] J_1(\alpha r)d\alpha = \int_0^\infty [a_3(\alpha)e^{-\alpha_4 t_2} + b_3(\alpha)e^{\alpha_4 t_2}]J_1(\alpha r)\, d\alpha \ , \tag{3.29}$$

$$-\int_0^\infty \beta_5[a_2(\alpha)e^{-\alpha_5 t_2} - b_2(\alpha)e^{\alpha_5 t_2}]J_1(\alpha r)d\alpha = -\int_0^\infty \beta_4[a_3(\alpha)e^{-\alpha_4 t_2} - b_3(\alpha)e^{\alpha_4 t_2}]J_1(\alpha r)\, d\alpha \ , \tag{3.30}$$

$$\int_0^\infty [a_3(\alpha)e^{-\alpha_4 t_1} + b_3(\alpha)e^{\alpha_4 t_1}]J_1(\alpha r)\, d\alpha = \int_0^\infty [a_4(\alpha)e^{-\alpha_0 t_1} + b_4(\alpha)e^{\alpha_0 t_1}]J_1(\alpha r)\, d\alpha \ , \tag{3.31}$$

$$-\int_0^\infty \beta_4[a_3(\alpha)e^{-\alpha_4 t_1} - b_3(\alpha)e^{\alpha_4 t_1}]J_1(\alpha r)\, d\alpha = -\int_0^\infty \alpha_0[a_4(\alpha)e^{-\alpha_0 t_1} - b_4(\alpha)e^{\alpha_0 t_1}]J_1(\alpha r)\cdot d\alpha \ , \tag{3.32}$$

$$\int_0^\infty [a_4(\alpha)e^{-\alpha_0 z_0} + b_4(\alpha)e^{\alpha_0 z_0}]J_1(\alpha r)\, d\alpha =$$

$$\int_0^\infty [a_5(\alpha)e^{-\alpha_0 z_0} + b_5(\alpha)e^{\alpha_0 z_0}]J_1(\alpha r)\, d\alpha \,, \tag{3.33}$$

$$-\int_0^\infty \alpha_0[a_4(\alpha)e^{-\alpha_0 z_0} - b_4(\alpha)e^{\alpha_0 z_0}]J_1(\alpha r)\, d\alpha =$$

$$-\int_0^\infty \alpha_0[a_5(\alpha)e^{-\alpha_0 z_0} - b_5(\alpha)e^{\alpha_0 z_0}]J_1(\alpha r)\, d\alpha - \mu I\delta(r-r_0) \,, \tag{3.34}$$

$$\int_0^\infty [a_5(\alpha) + b_5(\alpha)]J_1(\alpha r)\, d\alpha = \int_0^\infty [a_6(\alpha) + b_6(\alpha)]J_1(\alpha r)\, d\alpha \,, \tag{3.35}$$

$$-\int_0^\infty \alpha_0[a_5(\alpha) - b_5(\alpha)]J_1(\alpha r) = -\int_0^\infty \beta_1[a_6(\alpha) - b_6(\alpha)]J_1(\alpha r)\, d\alpha \,, \tag{3.36}$$

$$\int_0^\infty [a_6(\alpha)e^{\alpha_1 c_1} + b_6(\alpha)e^{-\alpha_1 c_1}]J_1(\alpha r)\, d\alpha =$$

$$\int_0^\infty [a_7(\alpha)e^{\alpha_2 c_1} + b_7(\alpha)e^{-\alpha_2 c_1}]J_1(\alpha r)\, d\alpha \,, \tag{3.37}$$

$$-\int_0^\infty \beta_1[a_6(\alpha)e^{\alpha_1 c_1} - b_6(\alpha)e^{-\alpha_1 c_1}]J_1(\alpha r)\, d\alpha =$$

$$-\int_0^\infty \beta_2[a_7(\alpha)e^{\alpha_2 c_1} - b_7(\alpha)e^{-\alpha_2 c_1}]J_1(\alpha r)\, d\alpha \,, \tag{3.38}$$

$$\int_0^\infty [a_7(\alpha)e^{\alpha_2 c_2} + b_7(\alpha)e^{-\alpha_2 c_2}]J_1(\alpha r)\, d\alpha = \int_0^\infty b_8(\alpha)e^{-\alpha_3 c_3}]J_1(\alpha r)\, d\alpha \,, \tag{3.39}$$

$$-\int_0^\infty \beta_2[a_7(\alpha)e^{\alpha_2 t_2} - b_7(\alpha)e^{-\alpha_2 c_2}]J_1(\alpha r) = -\int_0^\infty -\beta_3\, b_8(\alpha)e^{-\alpha_3 c_2}J_1(\alpha r)\, d\alpha \,, \tag{3.40}$$

where $\beta_i = \alpha_i/\mu_i$. Multiplying Eqs. (3.27)-(3.40) by $J_1(\alpha' r)r\,dr$, intergrating from 0 to $\infty$ and using the Fourier-Bessel integral

$$f(\alpha') = \int_0^\infty f(\alpha) \int_0^\infty J_\nu(\alpha' r)\, J_\nu(\alpha r)\, \alpha r\, dr d\alpha \tag{3.41}$$

gives, after dropping the primes,

$$a_1(\alpha)e^{-\alpha_0 t_3} = a_2(\alpha)e^{-\alpha_5 t_3} + b_2(\alpha)e^{\alpha_5 t_3}\ , \tag{3.42}$$

$$\alpha_0 a_1(\alpha)e^{-\alpha_0 t_3} = \beta_5 a_2(\alpha)e^{-\alpha_5 t_3} - \beta_5 b_2(\alpha)e^{\alpha_5 t_3}\ , \tag{3.43}$$

$$a_2(\alpha)e^{-\alpha_5 t_2} + b_2(\alpha)e^{\alpha_5 t_3} = a_3(\alpha)e^{-\alpha_4 t_2} + b_3(\alpha)e^{\alpha_4 t_2}\ , \tag{3.44}$$

$$\beta_5 a_2(\alpha)e^{-\alpha_5 t_2} - \beta_3 b_2(\alpha)e^{\alpha_5 t_2} = \beta_4 a_3(\alpha)e^{-\alpha_4 t_2} - \beta_4 b_3(\alpha)e^{\alpha_4 t_2}\ , \tag{3.45}$$

$$a_3(\alpha)e^{-\alpha_4 t_1} + b_3(\alpha)e^{\alpha_4 t_1} = a_4(\alpha)e^{-\alpha_0 t_1} + b_4(\alpha)e^{\alpha_0 t_1}\ , \tag{3.46}$$

$$\beta_4 a_3(\alpha)e^{-\alpha_4 t_1} - \beta_4 b_3(\alpha)e^{\alpha_4 t_1} = \alpha_0 a_4(\alpha)e^{-\alpha_0 t_1} - \alpha_0 b_4(\alpha)e^{\alpha_0 t_1}\ , \tag{3.47}$$

$$a_4(\alpha)e^{-\alpha_0 z_0} + b_4(\alpha)e^{\alpha_0 z_0} = a_5(\alpha)e^{-\alpha_0 z_0} + b_5(\alpha)e^{\alpha_0 z_0}\ , \tag{3.48}$$

$$\frac{\alpha_0}{\alpha} a_4(\alpha)e^{-\alpha_0 z_0} - \frac{\alpha_0}{\alpha} b_4(\alpha)e^{\alpha_0 z_0} = \frac{\alpha_0}{\alpha} a_5(\alpha)e^{-\alpha_0 z_0} - \frac{\alpha_0}{\alpha} b_5(\alpha)e^{\alpha_0 z_0} + \mu I r_0 J_1(\alpha r_0)\ , \tag{3.49}$$

$$a_5(\alpha) + b_5(\alpha) = a_6(\alpha) + b_6(\alpha)\ , \tag{3.50}$$

$$\alpha_0 a_5(\alpha) - \alpha_0 b_5(\alpha) = \beta_1 a_6(\alpha) - \beta_1 b_6(\alpha)\ , \tag{3.51}$$

$$a_6(\alpha)e^{\alpha_1 c_1} + b_6(\alpha)e^{-\alpha_1 c_1} = a_7(\alpha)e^{\alpha_2 c_1} + b_7(\ )e^{-\alpha_2 c_1} , \tag{3.52}$$

$$\beta_1 a_6(\alpha)e^{\alpha_1 c_1} - \beta_1 b_6(\alpha)e^{-\alpha_1 c_1} = \beta_2 a_7(\alpha)e^{-\alpha_2 c_1} - \beta_2 b_7(\alpha)e^{-\alpha_2 c_1} , \tag{3.53}$$

$$a_7(\alpha)e^{\alpha_2 c_2} + b_7(\alpha)e^{-\alpha_2 c_2} = b_8(\alpha)e^{-\alpha_3 c_2} , \tag{3.54}$$

$$\beta_2 a_7(\alpha)e^{\alpha_2 c_2} - \beta_2 b_7(\alpha)e^{\alpha_2 c_2} = -\beta_3 b_8(\alpha)e^{-\alpha_3 c_2} . \tag{3.55}$$

Equations (3.42)-(3.55) constitute a set of fourteen linear, inhomogeneous eequations in fourteen unknowns. The methods of solving equations of this type are well known and thus will not be given here. It is sufficient to state that the solutions to Eqs. (3.42)-(3.55) are

$$a_1 = \frac{\mu I r_0}{2} J_1(\alpha r_0) \frac{\alpha}{\alpha_0} \frac{S_1 e^{-\alpha_0 z_0} + S_0 e^{\alpha_0 z_0}}{Q_0 S_0 - Q_1 S_1} \Bigg( P_0 \Big[ (\beta_4+\beta_5) e^{-\alpha_5 (t_3-t_2)} - (\beta_4-\beta_5) e^{\alpha_5 (t_3-t_2)} \Big] + P_1 \Big[ (\beta_4-\beta_5) e^{-\alpha_5 (t_2-t_2)} - (\beta_4+\beta_5) e^{\alpha_5 (t_3-t_2)} \Big] \Bigg) \frac{e^{\alpha t_3}}{4\beta_4\beta_5} , \tag{3.56}$$

$$a_2 = \frac{\mu I r_0}{2} J_1(\alpha r_0) \frac{\alpha}{\alpha_0} \frac{S_1 e^{-\alpha_0 z_0} + S_0 e^{\alpha_0 z_0}}{Q_0 S_0 - Q_1 S_1} \Big[ (\beta_4+\beta_5)\ P_0 + (\beta_4-\beta_5) P_1 \Big] \frac{e^{\alpha_5 t_2}}{4\beta_4\beta_5} , \tag{3.57}$$

$$b_2 = -\frac{\mu I r_0}{2} J_1(\alpha r_0) \frac{\alpha}{\alpha_0} \frac{S_1 e^{-\alpha_0 z_0} + S_0 e^{\alpha_0 z_0}}{Q_0 S_0 - Q_1 S_1} \Big[ (\beta_4 - \beta_5) P_0 + (\beta_4 + \beta_5) P_1 \Big] \frac{e^{-\alpha_5 t_2}}{4\beta_4 \beta_5} , \tag{3.58}$$

$$a_3 = \frac{\mu I r_0}{2} J_1(\alpha r_0) \frac{\alpha}{\alpha_0} \frac{S_1 e^{-\alpha_0 z_0} + S_0 e^{\alpha_0 z_0}}{Q_0 S_0 - Q_1 S_1} \Big[ (\alpha_0 + \beta_4) Q_0 e^{-\alpha_0 t_1} - (\alpha_0 - \beta_4) Q_1 e^{\alpha_0 t_1} \Big] \frac{e^{\alpha_4 t_1}}{2\beta_4} , \tag{3.59}$$

$$b_3 = -\frac{\mu I r_0}{2} J_1(\alpha r_0) \frac{\alpha}{\alpha_0} \frac{S_1 e^{-\alpha_0 z_0} + S_0 e^{-\alpha_0 z_0}}{Q_0 S_0 - Q_1 S_1} \Big[ (\alpha_0 - \beta_4) Q_0 e^{-\alpha_0 t_1} - (\alpha_0 + \beta_4) Q_1 e^{\alpha_0 t_1} \Big] \frac{e^{-\alpha_4 t_1}}{2\beta_4} , \tag{3.60}$$

$$a_4 = \frac{\mu I r_0}{2} J_1(\alpha r_0) \frac{\alpha}{\alpha_0} \frac{S_1 e^{-\alpha_0 z_0} + S_0 e^{+\alpha_0 z_0}}{Q_0 S_0 - Q_1 S_1} Q_0 , \tag{3.61}$$

$$b_4 = \frac{\mu I r_0}{2} J_1(\alpha r_0) \frac{\alpha}{\alpha_0} \frac{S_1 e^{-\alpha_0 z_0} + S_0 e^{+\alpha_0 z_0}}{Q_0 S_0 - Q_1 S_1} Q_1 , \tag{3.62}$$

$$a_5 = \frac{\mu I r_0}{2} J_1(\alpha r_0) \frac{\alpha}{\alpha_0} \frac{Q_0 e^{-\alpha_0 z_0} + Q_1 e^{+\alpha_0 z_0}}{Q_0 S_0 - Q_1 S_1} S_1 , \tag{3.63}$$

$$b_5 = \frac{\mu I r_0}{2} J_1(\alpha r_0) \frac{\alpha}{\alpha_0} \frac{Q_0 e^{-\alpha_0 z_0} + Q_1 e^{-\alpha_0 z_0}}{Q_0 S_0 - Q_1 S_1} S_0 , \tag{3.64}$$

$$a_6 = \frac{\mu I r_0}{2} J_1(\alpha r_0) \frac{\alpha}{\alpha_0} \frac{Q_0 e^{-\alpha_0 z_0} + Q_1 e^{\alpha_0 z_0}}{Q_0 S_0 - Q_1 S_1} \left[(\alpha_0+\beta_1)S_1 - (\alpha_0-\beta_1)S_0\right] \frac{1}{2\beta_1} , \tag{3.65}$$

$$b_6 = - \frac{\mu I r_0}{2} J_1(\alpha r_0) \frac{\alpha}{\alpha_0} \frac{Q_0 e^{-\alpha_0 z_0} + Q_1 e^{\alpha_0 z_0}}{Q_0 S_0 - Q_1 S_1} \left[(\alpha_0-\beta_1)S_1 - (\alpha_0+\beta_1)S_0\right] \frac{1}{2\beta_1} , \tag{3.66}$$

$$a_7 = \frac{\mu I r_0}{2} J_1(\alpha r_0) \frac{\alpha}{\alpha_0} \frac{Q_0 e^{-\alpha_0 z_0} + Q_1 e^{\alpha_0 z_0}}{Q_0 S_0 - Q_1 S_1} \left[(\beta_1+\beta_2)R_0 + (\beta_1-\beta_2)R_1\right] \frac{e^{-\alpha_2 c_1}}{4\beta_1\beta_2} , \tag{3.67}$$

$$b_7 = - \frac{\mu I r_0}{2} J_1(\alpha r_0) \frac{\alpha}{\alpha_0} \frac{Q_0 e^{-\alpha_0 z_0} + Q_1 e^{\alpha_0 z_0}}{Q_0 S_0 - Q_1 S_1} \left[(\beta_1-\beta_2)R_0 - (\beta_1+\beta_2) R_1\right] \frac{e^{+\alpha_2 c_1}}{4\beta_1\beta_2} , \tag{3.68}$$

$$b_8 = \frac{\mu I r_0}{2} J_1(\alpha r_0) \frac{\alpha}{\alpha_0} \frac{Q_0 e^{-\alpha_0 z_0} + Q_1 e^{\alpha_0 z_0}}{Q_0 S_0 - Q_1 S_1} \Bigg( R_0 \Big[ (\beta_1+\beta_2) e^{\alpha_2 (c_2-c_1)} - (\beta_1-\beta_2) e^{-\alpha_2 (c_2-c_1)} \Big] + R_1 \Big[ (\beta_1-\beta_2) e^{\alpha_2 (c_2-c_1)} + (\beta_1-\beta_2) e^{-\alpha_2 (c_2-c_1)} \Big] \Bigg) \frac{e^{\alpha_3 c_2}}{4\beta_1\beta_2} , \tag{3.69}$$

where

$$Q_0 = e^{2\alpha_0 t_1}\Big[(\alpha_0-\beta_4)\ [(\alpha_0-\beta_5)(\beta_4+\beta_5)-(\alpha_0+\beta_5)(\beta_4-\beta_5)e^{2\alpha_5(t_3-t_2)}]$$

$$+\ (\alpha_0+\beta_4)\ [(\alpha_0-\beta_5)(\beta_4-\beta_5)-(\alpha_0+\beta_5)(\beta_4+\beta_5)e^{2\alpha_5(t_3-t_2)}]e^{2\alpha_4(t_2-t_1)}\Big], \tag{3.70}$$

$$Q_1 = (\alpha_0+\beta_4)\ [(\alpha_0-\beta_5)(\beta_4+\beta_5)-(\alpha_0+\beta_5)(\beta_4-\beta_5)e^{2\alpha_5(t_3-t_2)}]$$

$$+\ (\alpha_0-\beta_4)\ [(\alpha_0-\beta_5)(\beta_4-\beta_5)-(\alpha_0+\beta_5)(\beta_4+\beta_5)e^{2\alpha_5(t_3-t_2)}]e^{2\alpha_4(t_2-t_1)}\ . \tag{3.71}$$

$$S_0 = (\alpha_0-\beta_1)\ [(\beta_1+\beta_2)(\beta_2-\beta_3)+(\beta_1-\beta_2)(\beta_2+\beta_3)e^{2\alpha_2(c_2-c_1)}]$$

$$+\ (\alpha_0+\beta_1)\ [(\beta_1-\beta_2)(\beta_2-\beta_3)+(\beta_1+\beta_2)(\beta_2+\beta_3)e^{2\alpha_2(c_2-c_1)}]e^{2\alpha_1 c_1}\ , \tag{3.72}$$

$$S_1 = (\alpha_0+\beta_1)\ [(\beta_1+\beta_2)(\beta_2-\beta_3)+(\beta_1-\beta_2)(\beta_2+\beta_3)e^{2\alpha_2(c_2-c_1)}]$$

$$+\ (\alpha_0-\beta_1)\ [(\beta_1-\beta_2)(\beta_2-\beta_3)+(\beta_1+\beta_2)(\beta_2+\beta_3)e^{2\alpha_2(c_2-c_1)}]e^{2\alpha_1 c_1}\ , \tag{3.73}$$

$$P_0 = [(\alpha_0+\beta_4)Q_0 e^{-\alpha_0 t_1} - (\alpha_0-\beta_4)Q_1 e^{\alpha_0 t_1}]e^{-\alpha_4(t_2-t_1)}\ , \tag{3.74}$$

$$P_1 = [(\alpha_0-\beta_4)Q_0 e^{-\alpha_0 t_1} - (\alpha_0+\beta_4)Q_1 e^{\alpha_0 t_1}]e^{\alpha_4(t_2-t_1)}\ , \tag{3.75}$$

$$R_0 = [(\alpha_0+\beta_1)S_1 - (\alpha_0-\beta_1)S_0]e^{\alpha_1 c_1} , \tag{3.76}$$

$$R_1 = [(\alpha_0-\beta_1)S_1 - (\alpha_0+\beta_1)S_0]e^{-\alpha_1 c_1} . \tag{3.78}$$

The Vector Potential of a Finite Current

The solutions given by Eqs. (3.4)-(3.11) with the constants given by Eqs. (3.56)-(3.69) give the vector potential in the various regions for a delta function current. The problem of a finite size coil carrying a current I may now be solved by use of Eq. (2.17). It is very important to note, however, that Eq. (2.17) does not present the complete picture, for in the finite size coil case there exists a region which was absent in the delta function current case. In Fig. 4 this region is denoted by IV-V and requires special attention.

At a point, (r,z), in this region, the vector potential for a rectangular cross section coil is given by

$$A^{(4,5)}(r,z) = \frac{nI}{(r_2-r_1)(\ell_2-\ell_1)} \int_{r_1}^{r_2} \left[ \int_{\ell_1}^{z} \frac{A^{(4)}(r,z)}{i_0} dz_0 + \int_{z}^{\ell_2} \frac{A^{(5)}(r,z)}{i_0} dz_0 \right] dr_0, \tag{3.79}$$

i.e., for the part of the coil below the point in question the contribution to the vector potential is $A^{(4)}(r,z)$ while for the part above the point, the contribution is $A^{(5)}(r,z)$. The explicit dependence of $A^{(4)}(r,z)$ and $A^{(5)}(r,z)$ on $r_0$ and $z_0$ is exhibited by Eqs. (3.61)-(3.64). Substitution of Eqs. (3.7) and (3.8) with Eqs. (3.61)-(3.69) in Eq. (3.79) yields

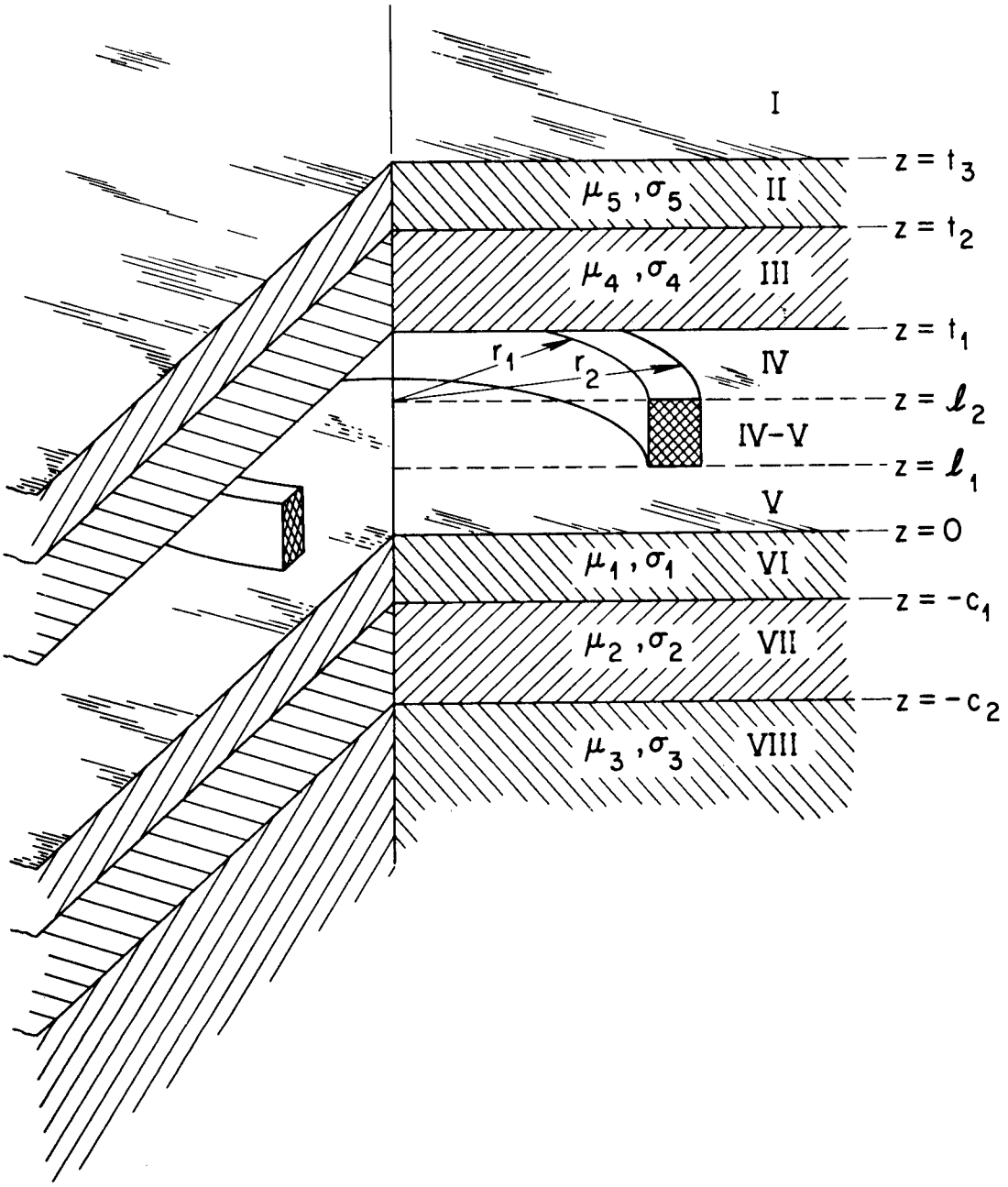


Figure 4. A rectangular cross section coil between conducting plates.

$$A^{(4,5)}(r,z) = \int_{r_1}^{r_2}\Bigg[\int_{\ell_1}^{z}\int_0^{\infty} \frac{\mu i_0 r_0}{2} J_1(\alpha r_0) \frac{\alpha(S_1 e^{-\alpha_0 z_0} + S_0 e^{\alpha_0 z_0}}{\alpha_0(Q_0 S_0 - Q_1 S_1)}$$

$$[Q_0 e^{-\alpha_0 z} + Q_1 e^{\alpha_0 z}] J_1(\alpha r) d\alpha dz_0 + \int_z^{\ell_2}\int_0^{\infty} \frac{\mu i_0 r_0}{2} J_1(\alpha r_0)$$

$$\frac{\alpha(Q_0 e^{-\alpha_0 z_0} + Q_1 e^{\alpha_0 z_0})}{\alpha_0(Q_0 S_0 - Q_1 S_1)} [S_1 e^{-\alpha_0 z} + S_0 e^{\alpha_0 z}]$$

$$J_1(\alpha r) d\alpha dz_0\Bigg] dr_0 , \tag{3.80}$$

where

$$i_0 = \frac{nI}{(r_2 - r_1)(\ell_2 - \ell_1)} \tag{3.81}$$

In Eq. (3.80) we reverse the order of integration and perform the $r_0$ integration to obtain

$$A^{(4,5)}(r,z) = \frac{\mu i_0}{2}\int_0^{\infty} J(r_1,r_2) \frac{\alpha J_1(\alpha r)}{\alpha_0(Q_0 S_0 - Q_1 S_1)} \Bigg([Q_0 e^{-\alpha_0 z} + Q_1 e^{\alpha_0 z}]$$

$$\int_{\ell_1}^{z} [S_1 e^{-\alpha_0 z_0} + S_0 e^{\alpha_0 z_0}] dz_0 + [S_1 e^{-\alpha_0 z} + S_0 e^{\alpha_0 z}]$$

$$\int_z^{\ell_2} Q_0 e^{-\alpha_0 z_0} + Q_1 e^{\alpha_0 z_0}] dz_0\Bigg) d\alpha , \tag{3.82}$$

where

$$J(r_1,r_2) = \int_{r_1}^{r_2} r_0 \, J_1(\alpha r_0) \, dr_0 \, . \tag{3.83}$$

The integration over $z_0$ is readily performed giving

$$A^{(4,5)}(r,z) = \frac{\mu i_0}{2} \int_0^\infty J(r_1,r_2) \frac{\alpha J_1(\alpha r_0)}{\alpha_0^2(Q_0S_0 - Q_1S_1)} \Big( 2(Q_0S_0 - Q_1S_1)$$

$$+ [Q_1 e^{\alpha_0 \ell_2} - Q_0 e^{-\alpha_0 \ell_2}][S_1 e^{-\alpha_0 z} + S_0 e^{\alpha_0 z}]$$

$$- [S_0 e^{\alpha_0 \ell_1} - S_1 e^{-\alpha_0 \ell_1}][Q_0 e^{-\alpha_0 z} + Q_1 e^{\alpha_0 z}] \Big) d\alpha \, . \tag{3.84}$$

If we let

$$J_0(r_1,r_2) = \int_{\alpha r_1}^{\alpha r_2} x \, J_1(x) \, dx = \alpha^2 J(r_1,r_2) \, , \tag{3.85}$$

then Eq. (3.84) becomes

$$A^{(4,5)}(r,z) = \frac{\mu i_0}{2} \int_0^\infty \frac{1}{\alpha \, \alpha_0^2} J_0(r_1,r_2) \, J_1(\alpha r)$$

$$\left[ 2 + \frac{(Q_1 e^{\alpha_0 \ell_2} - Q_0 e^{-\alpha_0 \ell_2})(S_1 e^{-\alpha_0 z} + S_0 e^{\alpha_0 z})}{Q_0S_0 - Q_1S_1} \right.$$

$$\left. - \frac{(S_0 e^{\alpha_0 \ell_1} - S_1 e^{-\alpha_0 \ell_1})(Q_0 e^{-\alpha_0 z} + Q_1 e^{\alpha_0 z})}{Q_0S_0 - Q_1S_1} \right] d\alpha \, . \tag{3.86}$$

Substitution of Eqs. (3.56)-(3.69) in Eqs. (3.4)-(3.11) and the results in Eq. (2.17) yield

$$A^{(1)}(r,z) = \frac{\mu i_0}{2}\int_0^\infty \frac{1}{\alpha\alpha_0^2} J_0(r_1,r_2)J_1(\alpha r)\,\frac{S_0(e^{\alpha_0\ell_2} - e^{\alpha_0\ell_1})-S_1(e^{-\alpha_0\ell_2} - e^{-\alpha_0\ell_1})}{Q_0S_0 - Q_1S_1}$$

$$\Big(P_0[(\beta_4+\beta_5)e^{-\alpha_5(t_3-t_2)} - (\beta_4-\beta_5)e^{\alpha_5(t_3-t_2)}]$$

$$+ P_1[(\beta_4-\beta_5)e^{-\alpha_5(t_3-t_2)} - (\beta_4+\beta_5)e^{\alpha_5(t_3-t_2)}]\Big)$$

$$\frac{e^{-\alpha_0(z-t_3)}}{4\beta_4\beta_5}\,d\alpha\ , \qquad (3.87)$$

$$A^{(2)}(r,z) = \frac{\mu i_0}{2}\int_0^\infty \frac{1}{\alpha\alpha_0^2} J_0(r_1,r_2)J_1(\alpha r)\,\frac{S_0(e^{\alpha_0\ell_2} - e^{\alpha_0\ell_1})-S_1(e^{-\alpha_0\ell_2}-e^{-\alpha_0\ell_1})}{4(Q_0S_0 - Q_1S_1)\beta_4\beta_5}$$

$$\Big([(\beta_4+\beta_5)P_0 + (\beta_4-\beta_5)P_1]e^{-\alpha_5(z-t_2)} - [(\beta_4-\beta_5)P_0 + (\beta_4+\beta_5)P_1]$$

$$e^{+\alpha_5(z-t_2)}\Big)\,d\alpha\ , \qquad (3.88)$$

$$A^{(3)}(r,z) = \frac{\mu i_0}{2}\int_0^\infty \frac{1}{\alpha\alpha_0^2} J_0(r_1,r_2)J_1(\alpha r)\,\frac{S_0(e^{\alpha_0\ell_2} - e^{\alpha_0\ell_1})-S_1(e^{-\alpha_0\ell_2}-e^{-\alpha_0\ell_1})}{2(Q_0S_0 - Q_1S_1)\beta_4}$$

$$\Big([\alpha_0+\beta_4)Q_0e^{-\alpha_0t_1} - (\alpha_0-\beta_4)Q_1e^{\alpha_0t_1}]e^{-\alpha_4(z-t_1)}$$

$$- [(\alpha_0-\beta_4)Q_0 e^{-\alpha_0 t_1} - (\alpha_0+\beta_4)Q_1 e^{\alpha_0 t_1}] e^{\alpha_4(z-t_1)}\Bigg) d\alpha \ , \tag{3.89}$$

$$A^{(4)}(r,z) = \frac{\mu i_0}{2}\int_0^\infty \frac{1}{\alpha\alpha_0^2} J_0(r_1,r_2)J_1(\alpha r) \frac{S_0(e^{\alpha_0\ell_2} - e^{\alpha_0\ell_1})-S_1(e^{-\alpha_0\ell_1}-e^{-\alpha_0\ell_1})}{Q_0S_0 - Q_1S_1}$$

$$[Q_0 e^{-\alpha_0 z} + Q_1 e^{\alpha_0 z}] \, d\alpha \ , \tag{3.90}$$

$$A^{(5)}(r,z) = \frac{\mu i_0}{2}\int_0^\infty \frac{1}{\alpha\alpha_0^2} J_0(r_1,r_2)J_1(\alpha r) \frac{Q_1(e^{\alpha_0\ell_2} - e^{\alpha_1\ell_1})-Q_0(e^{-\alpha_0\ell_2}-e^{-\alpha_0\ell_1})}{Q_0S_0 - Q_1S_1}$$

$$[S_1 e^{-\alpha_0 z} + S_0 e^{\alpha_0 z}] \, d\alpha \ , \tag{3.91}$$

$$A^{(6)}(r,z) = \frac{\mu i_0}{2}\int_0^\infty \frac{1}{\alpha\alpha_0^2} J_0(r_1,r_2)J_1(\alpha r) \frac{Q_1(e^{\alpha_0\ell_2} - e^{\alpha_0\ell_1})-Q_0(e^{-\alpha_0\ell_2}-e^{-\alpha_0\ell_1})}{2(Q_0S_0 - Q_1S_1)\beta_1}$$

$$\Bigg([(\alpha_0+\beta_1)S_1 - (\alpha_0-\beta_1)S_0]e^{-\alpha_1 z} - [(\alpha_0-\beta_1)S_1-(\alpha_0+\beta_1)S_0]e^{\alpha_1 z}\Bigg) d\alpha \ , \tag{3.92}$$

$$A^{(7)}(r,z) = \frac{\mu i_0}{2}\int_0^\infty \frac{1}{\alpha\alpha_0^2} J_0(r_1,r_2)J_1(\alpha r) \frac{Q_1(e^{\alpha_0\ell_2} - e^{\alpha_0\ell_1})-Q_0(e^{-\alpha_0\ell_2}-e^{-\alpha_0\ell_1})}{4(Q_0S_0 - Q_1S_1)\beta_1\beta_2}$$

$$\Bigg([(\beta_1+\beta_2)R_0 + (\beta_1-\beta_2)R_1]e^{-\alpha_2(z+c_1)} -$$

$$[(\beta_1-\beta_2)R_0 + (\beta_1+\beta_2)R_1]e^{\alpha_2(z+c_1)}\Bigg)\, d\alpha \,, \tag{3.93}$$

$$A^{(8)}(r,z) = \frac{\mu i_0}{2}\int_0^\infty \frac{1}{\alpha\alpha_0^2} J_0(r_1,r_2)J_1(\alpha r)\, \frac{Q_1(e^{\alpha_0\ell_2} - e^{\alpha_0\ell_1})-Q_0(e^{-\alpha_0\ell_2}-e^{-\alpha_0\ell_1})}{Q_0S_0 - Q_1\, S_1}$$

$$\Bigg(R_0[(\beta_1+\beta_2)e^{\alpha_2(c_2-c_1)} - (\beta_1-\beta_2)e^{-\alpha_2(c_2-c_1)}]$$

$$+ R_1[(\beta_1-\beta_2)e^{\alpha_2(c_2-c_1)} - (\beta_1+\beta_2)e^{-\alpha_2(c_2-c_1)}]\Bigg)$$

$$\frac{e^{\alpha_3(z+c_2)}}{4\beta_1\beta_2}\, d\alpha \tag{3.94}$$

for the vector potential in the various regions due to a current density, $i_0$, flowing in a coil of cross sectional area $(r_2-r_1)(\ell_2-\ell_1)$. With Eqs. (3.86)-(3.94) any number of physically observable phenomena may be calculated. Before attempting these calculations, however, we shall consider some limiting cases.

First let us suppose that the relative permeability of each region is unity and at the same time the conductivity in each region vanishes. In this case, if we assume $\varepsilon_i = \varepsilon_0$ for all i, then $Q_1 = S_1 = 0$ and

$$Q_o = -8\alpha_0^3 e^{2\alpha_0 t_3} \,, \tag{3.95}$$

$$S_0 = 8\alpha_0^3 e^{2\alpha_0 c_2} , \tag{3.96}$$

so that

$$A^{(1)}(r,z) = A^{(2)}(r,z) = A^{(3)}(r,z) = A^{(4)}(r,z) =$$

$$\frac{\mu i_0}{2}\int_0^\infty \frac{1}{\alpha\alpha_0^2} J_0(r_1,r_2)J_1(\alpha r)[e^{\alpha_0\ell_2} - e^{\alpha_0\ell_1}]e^{-\alpha_0 z}\, d\alpha , \tag{3.97}$$

$$A^{(4,5)}(r,z) = \frac{\mu i_0}{2}\int_0^\infty \frac{1}{\alpha\alpha_0^2} J_0(r_1,r_2)J_1(\alpha r)\left(2 -[e^{+\alpha_0(z-\ell_2)}+e^{-\alpha_0(z-\ell_1)}]\right) d\alpha , \tag{3.98}$$

$$A^{(5)}(r,z) = A^{(6)}(r,z) = A^{(7)}(r,z) = A^{(8)}(r,z) =$$

$$\frac{\mu i_0}{2}\int_0^\infty \frac{1}{\alpha\alpha_0^2} J_0(r_1,r_2)J_1(\alpha r)[e^{-\alpha_0\ell_1}-e^{-\alpha_0\ell_2}]e^{\alpha_0 z}\, d\alpha , \tag{3.99}$$

which agrees with the answer obtained by Dodd (17).

Another case of interest is that for which $\mu_3 = \mu_4 = \mu_5 = 1$ and $\sigma_3 = \sigma_4 = \sigma_5 = 0$; i.e., the case of a coil above a two-layered conductor. In this case, $Q_1 = 0$ and

$$Q_0 = -8\alpha_0^3 e^{2\alpha_0 t_3} , \tag{3.100}$$

$$S_0 = (\alpha_0-\beta_1)[(\beta_1+\beta_2)(\beta_2-\alpha_0)+(\beta_1-\beta_2)(\beta_2+\alpha_0)e^{2\alpha_2(c_2-c_1)}] +$$

$$(\alpha_0+\beta_1)[(\beta_1-\beta_2)(\beta_2-\alpha_0)+(\beta_1+\beta_2)(\beta_2+\alpha_0)e^{2\alpha_2(c_2-c_1)}]e^{2\alpha_1 c_1}\, e^{2\alpha_1 c_1}\ , \tag{3.101}$$

$$S_1 = (\alpha_0+\beta_1)[(\beta_1+\beta_2)(\beta_2-\alpha_0)+(\beta_1-\beta_2)(\beta_2+\alpha_0)e^{2\alpha_2(c_2-c_1)}] + (\alpha_0-\beta_1)$$

$$[(\beta_1-\beta_2)(\beta_2-\alpha_0)+(\beta_1+\beta_2)(\beta_2+\alpha_0)e^{2\alpha_2(c_2-c_1)}]e^{2\alpha_1 c_1}\ , \tag{3.102}$$

so that

$$A^{(1)}(r,z) = A^{(2)}(r,z) = A^{(3)}(r,z) = A^{(4)}(r,z) =$$

$$\frac{\mu i_0}{2}\int_0^\infty \frac{1}{\alpha\alpha_0^2} J_0(r_1,r_2)J_1(\alpha r)\left[e^{\alpha_0\ell_2} - e^{\alpha_0\ell_1}) - (e^{-\alpha_0\ell_2} - e^{-\alpha_0\ell_1})\frac{S_1}{S_0}\right] e^{-\alpha_0 z}\, d\alpha\ , \tag{3.103}$$

$$A^{(4,5)}(r,z) = \frac{\mu i_0}{2}\int_0^\infty \frac{1}{\alpha\alpha_0^2} J_0(r_1,r_2)J_1(\alpha r)\left(2 - [e^{\alpha_0(z-\ell_2)} + e^{-\alpha_0(z-\ell_1)} - [e^{-\alpha_0\ell_2} - e^{-\alpha_0\ell_1}]\frac{S_1}{S_0}\, e^{-\alpha_0 z}\right) d\alpha, \tag{3.104}$$

$$A^{(5)}(r,z) = \frac{\mu i_0}{2}\int_0^\infty \frac{1}{\alpha\alpha_0^2} J_0(r_1,r_2)J_1(\alpha r)\left[(e^{-\alpha_0\ell_1} - e^{-\alpha_0\ell_2})(e^{\alpha_0 z} + \frac{S_1}{S_0}\, e^{-\alpha_0 z})\right] d\alpha\ , \tag{3.105}$$

$$A^{(6)}(r,z) = \frac{\mu i_0}{2}\int_0^\infty \frac{1}{\alpha\alpha_0^2} J_0(r_1,r_2)J_1(\alpha r)\ \frac{e^{-\alpha_0\ell_1} - e^{-\alpha_0\ell_2}}{2\beta_1}$$

$$\left([(\alpha_0+\beta_1)-(\alpha_0-\beta_1)\frac{S_1}{S_0}]e^{\alpha_1 z} - [(\alpha_0-\beta_1)-(\alpha_0+\beta_1)\frac{S_1}{S_0}]e^{-\alpha_1 z}\right) d\alpha \ , \quad (3.106)$$

$$A^{(7)}(r,z) = \frac{\mu i_0}{2}\int_0^\infty \frac{1}{\alpha\alpha_0^2} J_0(r_1,r_2)J_1(\alpha r) \frac{e^{-\alpha_0\ell_1} - e^{-\alpha_0\ell_2}}{4\beta_1\beta_2 S_0}$$

$$\left([(\beta_1+\beta_2)R_0 + (\beta_1-\beta_2)R_1]e^{-\alpha_2(z+c_1)}\right.$$

$$\left. - [(\beta_1-\beta_2)R_0 + (\beta_1+\beta_2)R_1]e^{\alpha_2(z+c_1)}\right) d\alpha \ , \quad (3.107)$$

$$A^{(8)}(r,z) = \frac{\mu i_0}{2}\int_0^\infty \frac{1}{\alpha\alpha_0^2} J_0(r_1,r_2)J_1(\alpha r) \frac{e^{-\alpha_0\ell_1} - e^{-\alpha_0\ell_2}}{4\beta_1\beta_2 S_0}$$

$$\left([(\beta_1+\beta_2)R_0 + (\beta_1-\beta_2)R_1]e^{\alpha_2(c_2-c_1)}\right.$$

$$\left. - [(\beta_1-\beta_2)R_0 + (\beta_1+\beta_2)R_1]e^{-\alpha_2(c_2-c_1)}\right) e^{\alpha_3(z+c_2)} d\alpha \ , \quad (3.108)$$

where we have assumed $\varepsilon_i = \varepsilon_0$ for all i and where

$$R_0 = [(\alpha_0+\beta_1)S_1 - (\alpha_0-\beta_1)S_0]e^{\alpha_1 c_1} \ , \quad (3.109)$$

$$R_1 = [(\alpha_0-\beta_1)S_1 - (\alpha_0+\beta_1)S_0]e^{-\alpha_1 c_1} \ . \quad (3.110)$$

Yet another interesting case is that for which $\mu_4 = \mu_5 = 1$ and $\sigma_4 = \sigma_5 = 0$ which is just the case of a coil above a three-conductor plane. For this case $Q_1 = 0$ and

$$Q_0 = -8\alpha_0^3 e^{2\alpha_0 t_3} , \tag{3.111}$$

$$S_0 = (\alpha_0-\beta_1)[(\beta_1+\beta_2)(\beta_2-\beta_3)+(\beta_1-\beta_2)(\beta_2+\beta_3)e^{2\alpha_2(c_2-c_1)}] + (\alpha_0+\beta_1)$$

$$[(\beta_1-\beta_2)(\beta_2-\beta_3)+(\beta_1+\beta_2)(\beta_2+\beta_3)e^{2\alpha_2(c_2-c_1)}]e^{2\alpha_1 c_1} , \tag{3.112}$$

$$S_1 = (\alpha_0+\beta_1)[(\beta_1+\beta_2)(\beta_2-\beta_3)+(\beta_1-\beta_2)(\beta_2+\beta_3)e^{2\alpha_2(c_2-c_1)}] + (\alpha_0-\beta_1)$$

$$[(\beta_1-\beta_2)(\beta_2-\beta_3)+(\beta_1+\beta_2)(\beta_2+\beta_3)e^{2\alpha_2(c_2-c_1)}]e^{2\alpha_1 c_1} . \tag{3.113}$$

Thus for a coil above a three-conductor plane, the vector potential is given by Eqs. (3.103)-(3.108) with $S_0$ and $S_1$ now given by Eqs. (3.112) and (3.113).

There are still other interesting cases, but we shall turn now to the calculation of some physically observable phenomena.

## The Voltage Induced by a Finite Current

Now let us suppose that another coil of length $\ell_2' - \ell_1'$ ($\ell_1' \geq \ell_1$ and $\ell_2' \leq \ell_2$) with inner and outer radii $r_1'$ and $r_2'$ is placed inside the coil at hand. One can then ask what is the voltage induced in this second coil. The answer is of course easily obtained by use of Eq. (2.26) and Eq. (3.86). Substituting the latter in the former and performing the r and z integrations yield

$$V = \frac{j\pi\omega\mu nn'I}{(r_2'-r_1')(\ell_2'-\ell_1')(r_2-r_1)(\ell_2-\ell_1)} \int_0^\infty \frac{1}{\alpha^3\alpha_0^2} J_0(r_1,r_2)J_0(r_1',r_2') \Bigg[ 2(\ell_2'-\ell_1')$$

$$- \frac{(Q_1 e^{\alpha_0\ell_2} - Q_0 e^{-\alpha_0\ell_2})[S_1(e^{-\alpha_0\ell_2'} - e^{-\alpha_0\ell_1'}) - S_0(e^{\alpha_0\ell_2'} - e^{\alpha_0\ell_1'})]}{\alpha_0(Q_0S_0 - Q_1S_1)}$$

$$+ \frac{(S_0 e^{\alpha_0\ell_1} - S_1 e^{-\alpha_0\ell_1})[Q_0(e^{-\alpha_0\ell_2'} - e^{-\alpha_0\ell_1'}) - Q_1(e^{\alpha_0\ell_2'} - e^{\alpha_0\ell_1'})]}{\alpha_0(Q_0S_0 - Q_1S_1)} \Bigg] d\alpha \ , \tag{3.114}$$

where we have used Eq. (3.81) for $i_0$. Obviously, Eq. (3.114) is valid only when the second coil is in region IV-V.

If instead we place the second coil in region I, then A in Eq. (2.26) is identically equal to $A^{(1)}(r,z)$ given by Eq. (3.87), while if the coil is placed so that part of it lies in region IV-V and the remainder in region IV, Eq. (2.26) becomes

$$V = \frac{j2\pi\omega n'}{(r_2'-r_1')(\ell_2'-\ell_1')} \int_{r_1'}^{r_2'} r \left[ \int_{\ell_1'}^{\ell_2} A^{(4,5)}(r,z)dz + \int_{\ell_2}^{\ell_2'} A^{(4)}(r,z)dz \right] dr \ . \tag{3.115}$$

on the other hand, if we let $\mu_3 = 1$ and $\sigma_3 = 0$ and place the coil in region VIII, then with $Q_0$ and $Q_1$ given by Eqs. (3.70) and (3.71), respectively, the induced voltage is

$$V = \frac{j\pi\omega\mu nn'I}{(r_2'-r_1')(\ell_2'-\ell_1')(r_2-r_1)(\ell_2-\ell_1)} \int_0^\infty \frac{1}{\alpha^3\alpha_0^2} J_0(r_1,r_2)J_0(r_1',r_2')$$

$$\frac{Q_1(e^{\alpha_0\ell_2} - e^{\alpha_0\ell_1}) - Q_0(e^{-\alpha_0\ell_2} - e^{-\alpha_0\ell_1})}{4\alpha_0(Q_0S_0 - Q_1S_1)\beta_1\beta_2} e^{\alpha_0c_2} (e^{-\alpha_0\ell_1'} - e^{-\alpha_0\ell_2'})$$

$$\Big(R_0[(\beta_1+\beta_2)e^{\alpha_2(c_2-c_1)} - (\beta_1-\beta_2)e^{-\alpha_2(c_2-c_1)}] + R_1[(\beta_1-\beta_2)e^{\alpha_2(c_2-c_1)}$$

$$+ (\beta_1+\beta_2)e^{-\alpha_2(c_2-c_1)}]\Big) d\alpha \ , \qquad (3.116)$$

where $R_0$ and $R_1$ are given by Eqs. (3.109) and (3.110) with $\beta_3 = \alpha_0$. if we let the two upper conductors recede to infinity, Eq. (3.116) becomes

$$V = \frac{j\pi\omega\mu nn'I}{(r_2'-r_1')(\ell_2'-\ell_1')(r_2-r_1)(\ell_2-\ell_1)} \int_0^\infty \frac{1}{\alpha^3\alpha_0^2} J_0(r_1,r_2)J_0(r_1',r_2')$$

$$\frac{e^{-\alpha_0\ell_1} - e^{-\alpha_0\ell_2}}{4\alpha_0\beta_1\beta_2S_0} e^{\alpha_0c_2} (e^{-\alpha_0\ell_1'} - e^{-\alpha_0\ell_2'}) \Big([(\beta_1+\beta_2) R_0 + (\beta_1-\beta_2)R_1]$$

$$e^{\alpha_2(c_2-c_1)} - [(\beta_1-\beta_2) R_0 + (\beta_1+\beta_2) R_1] e^{-\alpha_2(c_2-c_1)}\Big) d\alpha \ , \qquad (3.117)$$

whereas before $R_0$ and $R_1$ are given by Eqs. (3.109) and (3.110) while $S_0$ and $S_1$ are given by Eqs. (3.101) and (3.102).

Let us assume for the moment that we are interested in the voltage induced in one coil by the current in another coil when the coils are separated by an arbitrary number of plane conductors. First, for one conductor Eq. (3.117) reduces, after considerable algebra, to

$$V = \frac{2j\pi\omega\mu nn'I}{(r_2-r_1)(\ell_2-\ell_1)(r_2'-r_1')(\ell_2'-\ell_1')} \int_0^\infty \frac{1}{\alpha^3\alpha_2^2} J_0(r_1,r_2)J_0(r_1',r_2')$$

$$(e^{-\alpha_0\ell_1} - e^{-\alpha_0\ell_2})(e^{-\alpha_0\ell_1'} - e^{-\alpha_0\ell_2'}) \frac{2\beta_1 e^{(\alpha_0+\alpha_1)c_1}}{S_0} d\alpha \ , \tag{3.118}$$

where

$$S_0 = (\alpha_0-\beta_1)(\beta_1-\alpha_0)+(\alpha_0+\beta_1)(\beta_1+\alpha_0)e^{2\alpha_1 c_1} \ , \tag{3.119}$$

while for two conductors Eq. (3.117) can be written as

$$V = \frac{2j\pi\omega\mu nn'I}{(r_2-r_1)(\ell_2-\ell_1)(r_2'-r_1')(\ell_2'-\ell_1')} \int_0^\infty \frac{1}{\alpha^3\alpha_0} J_0(r_1,r_2)J_0(r_1',r_2')$$

$$(e^{-\alpha_0\ell_1} - e^{-\alpha_0\ell_2})(e^{-\alpha_0\ell_1'} - e^{-\alpha_0\ell_2'}) \frac{4\beta_1\beta_2 e^{(\alpha_0+\alpha_2)c_2} e^{(\alpha_1-\alpha_2)c_1}}{S_0} d\alpha, \tag{3.120}$$

where

$$S_0 = (\alpha_0-\beta_1)[(\beta_1+\beta_2)(\beta_2-\alpha_0)+(\beta_1-\beta_2)(\beta_2+\alpha_0)e^{2\alpha_2(c_2-c_1)}]$$

$$+ (\alpha_0+\beta_1)[(\beta_1-\beta_2)(\beta_2-\alpha_0)+(\beta_1+\beta_2)(\beta_2+\alpha_0)e^{2\alpha_2(c_2-c_1)}]e^{2\alpha_1 c_1} \ . \tag{3.121}$$

Examination of Eqs. (3.118)-(3.131) shows us that, in general, the expression for the voltage induced in one coil by the current in another is

$$V = \frac{2j\pi\omega\mu nn'I}{(r_2-r_1)(\ell_2-\ell_1)(r_2'-r_1')(\ell_2'-\ell_1')} \int_0^\infty \frac{1}{\alpha^3\alpha_0^2} J_0(r_1,r_2)J_0(r_1',r_2')$$

$$(e^{-\alpha_0\ell_1} - e^{-\alpha_0\ell_2})(e^{-\alpha_0\ell_1'} - e^{-\alpha_0\ell_2'}) \frac{2^k\beta_k e^{(\alpha_0+\alpha_2)c_k} \prod_{i=1}^{k-1} \beta_i e^{(\alpha_i-\alpha_{i+1})c_i}}{S_0^{(k)}} d \,, \tag{3.122}$$

where k is the number of conductors separating the two coils and where $S_0^{(k)}$ is obtained by replacing $(\beta_{k-1} - \alpha_0)$, in the expression for $S_0^{(k-1)}$, with

$$(\beta_{k-1}+\beta_k)(\beta_k-\alpha_0)+(\beta_{k-1}-\beta_k)(\beta_k+\alpha_0)e^{2\alpha_k(c_k-c_{k-1})} \tag{3.123}$$

and by replacing $(\beta_{k-1} + \alpha_0)$ with

$$(\beta_{k-1}-\beta_k)(\beta_k-\alpha_0)+(\beta_{k-1}+\beta_k)(\beta_k+\alpha_0)e^{2\alpha_k(c_k-c_k)} \,. \tag{3.124}$$

For example, if we define

$$f_k(\alpha) \equiv \frac{2^k\beta_k e^{(\alpha_0+\alpha_k)c_k} \prod_{i=1}^{k-1} \beta_i e^{(\alpha_i-\alpha_{i+1})c_i}}{S_0^{(k)}} \,, \tag{3.125}$$

then for the case in which the coils are separated by three conductors, we have

$$f_3(\alpha) = \frac{8\beta_1\beta_2\beta_3 e^{(\alpha_0+\alpha_3)c_3} e^{(\alpha_1-\alpha_2)c_1} e^{(\alpha_2-\alpha_3)c_3}}{S_0^{(k)}} \,, \tag{3.136}$$

where, according to the above formula for obtaining $S_0^{(k)}$,

$$S_0^{(3)} = (\alpha_0-\beta_1)\Big[(\beta_1+\beta_2)[(\beta_2+\beta_3)(\beta_3-\alpha_0)+(\beta_2-\beta_3)(\beta_3+\alpha_0)e^{2\alpha_3(c_3-c_2)}] +$$

$$(\beta_1-\beta_2)[(\beta_2-\beta_3)(\beta_3-\alpha_0)+(\beta_2+\beta_3)(\beta_3+\alpha_0)e^{2\alpha_3(c_3-c_2)}]e^{2\alpha_2(c_2-c_1)}\Big]$$

$$+ (\alpha_0+\beta_1)\Big[(\beta_1-\beta_2)[(\beta_2+\beta_3)(\beta_3-\alpha_0)+(\beta_2-\beta_3)(\beta_3+\alpha_0)e^{2\alpha_3(c_3-c_2)}]$$

$$+ (\beta_1+\beta_2)[(\beta_2-\beta_3)(\beta_3-\alpha_0)+(\beta_2+\beta_3)(\beta_3+\alpha_0)e^{2\alpha_3(c_3-c_2)}]e^{2\alpha_2(c_2-c_1)}\Big]e^{2\alpha_1 c_1}. \tag{3.127}$$

It is easily seen that $f_3(\alpha)$ reduces to $f_2(\alpha)$ when $\mu_3 = 1$, $\sigma_3 = 0$, $\varepsilon_3 = \varepsilon_0$; on the other hand, if $\mu_1 = \mu_2$, $\sigma_1 = \sigma_2$ and $\varepsilon_1 = \varepsilon_2$, then $f_3(\alpha)$ reduces to

$$f_2'(\alpha) = 4\beta_2\beta_3\, e^{(\alpha_0+\alpha_3)c_3} e^{(\alpha_2-\alpha_3)c_2}\Big[(\alpha_0-\beta_2)[(\beta_2+\beta_3)(\beta_3-\alpha_0)$$

$$+ (\beta_2-\beta_3)(\beta_3+\alpha_0)e^{2\alpha_3(c_3-c_2)}] + (\alpha_0+\beta_2)[(\beta_2-\beta_3)(\beta_3-\alpha_0)$$

$$+ (\beta_2+\beta_3)(\beta_3+\alpha_0)e^{2\alpha_3(c_3-c_2)}]e^{2\alpha_2 c_2}\Big]^{-1}, \tag{3.128}$$

which is equal, as it should be, to $f_2(\alpha)$ with all subscripts greater than zero increased by unity. Similar results are obtained when $\mu_2 = \mu_3$, $\sigma_2 = \sigma_3$, and $\varepsilon_2 = \varepsilon_3$.

Further, let us suppose that there are an arbitrary number of electromagnetically identical plates separating the two coils. In this case, Eq. (3.125) becomes

$$f_k'(\alpha) = \frac{2\beta_k e^{(\alpha_0+\alpha_k)c_k}}{(\alpha_0-\beta_k)(\beta_k-\alpha_0)+(\alpha_0+\beta_k)(\beta_k+\alpha_0)e^{2\alpha_k c_k}}, \tag{3.129}$$

i.e., the voltage induced in the lower coil by the current in the upper one is

$$V = \frac{2j\pi\omega\mu nn'I}{(r_2-r_1)(\ell_2-\ell_1)(r_2'-r_1')(\ell_2'-\ell_1')} \int_0^\infty \frac{1}{\alpha^3\alpha_0^2} J_0(r_1,r_2)J_0(r_1',r_2')$$

$$(e^{-\alpha_0\ell_1} - e^{-\alpha_0\ell_2})(e^{-\alpha_0\ell_1'} - e^{-\alpha_0\ell_2'})$$

$$\frac{2\beta_k e^{(\alpha_0+\alpha_k)c_k}}{(\alpha_0-\beta_k)(\beta_k-\alpha_0)+(\alpha_0+\beta_k)(\beta_k+\alpha_0)e^{2\alpha_k c_k}} d\alpha \tag{3.130}$$

which is in agreement with Eqs. (3.118) and (3.119). Many more arguments supporting the validity of Eq. (3.122) can be developed, but brevity requires their omission.

In each of the cases given by Eqs. (3.114)-(3.130), the mutual inductance of the two coils is easily calculated by the use of Eq. (2.35) from which we see that division of these equations by $j\omega I$ is all that is necessary.

## The Impedance of a Finite Cross Section Coil

A quantity of extreme interest for any coil is its impedance. To effect the calculation of coil impedance, we must first determine the

self induced voltage. To this end, we substitute Eq. (3.86) in Eq. (2.28) or, equivalently, let the dimensions of the two coils in Eq. (3.114) become the same. Choosing the latter alternative and rearranging terms yield

$$V = \frac{2j\pi\omega\mu n^2 I}{(r_2-r_1)^2(\ell_2-\ell_1)^2} \int_0^\infty \frac{1}{\alpha^3\alpha_0^2} J_0^2(r_1,r_2) \Bigg[ (\ell_2-\ell_1) + \frac{(Q_1 e^{\alpha_0\ell_2} - Q_0 e^{-\alpha_0\ell_2})(S_1 e^{-\alpha_0\ell_1} - S_0 e^{\alpha_0\ell_1}) - (Q_0S_0 - Q_1S_1)}{\alpha_0(Q_0S_0 - Q_1S_1)} + \frac{Q_1S_0(e^{2\alpha_0\ell_2} + e^{2\alpha_0\ell_1}) + Q_0S_1(e^{-2\alpha_0\ell_2} + e^{-2\alpha_0\ell_1})}{2\alpha_0(Q_0S_0 - Q_1S_1)} \Bigg] d\alpha \,, \tag{3.131}$$

which we substitute in Eq. (2.42) to obtain

$$Z = \frac{2j\pi\omega\mu n^2}{(r_2-r_1)^2(\ell_2-\ell_1)^2} \int_0^\infty \frac{1}{\alpha^3\alpha_0^2} J_0^2(r_1,r_2) \Bigg[ (\ell_2-\ell_1) + \frac{(Q_1 e^{\alpha_0\ell_2} - Q_0 e^{-\alpha_0\ell_2})(S_1 e^{-\alpha_0\ell_1} - S_0 e^{\alpha_0\ell_1}) - (Q_0S_0 - Q_1S_1)}{\alpha_0(Q_0S_0 - Q_1S_1)} + \frac{Q_1S_0(e^{2\alpha_0\ell_2} + e^{2\alpha_0\ell_1}) + Q_0S_1(e^{-2\alpha_0\ell_2} + e^{-\alpha_0\ell_1})}{2\alpha_0(Q_0S_0 - Q_1S_1)} \Bigg] d\alpha \tag{3.132}$$

for the coil impedance. For the case in which Eqs. (3.111)-(3.113) hold, i.e., a coil above a three conductor plane, we have

$$Z = \frac{2j\pi\omega\mu n^2}{(r_2-r_1)^2(\ell_2-\ell_1)^2} \int_0^\infty \frac{1}{\alpha^3\alpha_0^2} J_0^2(r_1,r_2) \left[ (\ell_2-\ell_1) + \frac{1}{\alpha_0} [e^{-\alpha_0(\ell_2-\ell_1)} - 1] + \right.$$

$$\left. \frac{S_1}{2\alpha_0 S_0} [e^{-2\alpha_0\ell_2} + e^{-2\alpha_0\ell_1} - 2e^{-\alpha_0(\ell_2+\ell_1)}] \right] d\alpha \ , \qquad (3.133)$$

which reduces to the answer obtained by Dodd and Deeds (18) for $\mu_3 = 1$, $\sigma_3 = \sigma_2$.

Now let us suppose that we are interested in the impedance of a coil above an arbitrary number of plane conductors, the lower one of which extends to infinity as shown in Fig. 5. First, we define $\beta_0 \equiv \alpha_0$ and $C_0 \equiv 0$, then the impedance is given by Eq. (3.133) with

$$\frac{S_1}{S_0} = \frac{\beta_0-\beta_1}{\beta_0+\beta_1} \qquad (3.134)$$

for one conductor with

$$\frac{S_1}{S_0} = \frac{(\beta_0+\beta_1)(\beta_1-\beta_2)+(\beta_0-\beta_1)(\beta_1+\beta_2)e^{2\alpha_1(c_1-c_0)}}{(\beta_0-\beta_1)(\beta_1-\beta_2)+(\beta_0+\beta_1)(\beta_1+\beta_2)e^{2\alpha_1(c_1-c_0)}} \qquad (3.135)$$

for two conductors. For three conductors, Eq. (3.133) is still valid if we take

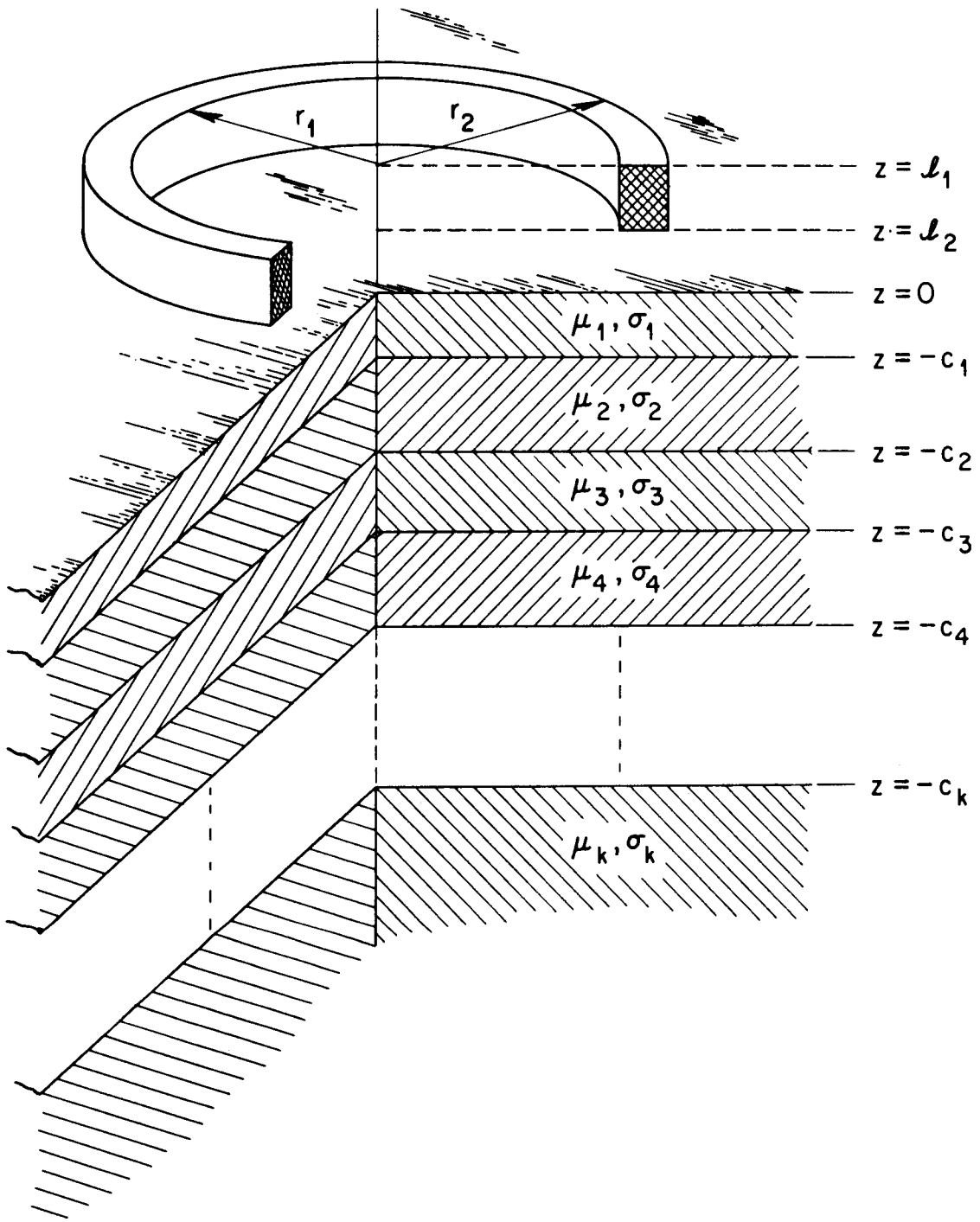


Figure 5. A rectangular cross section coil above an arbitrary number of conducting plates.

$$\frac{S_1}{S_0} = \Big[(\beta_0+\beta_1)[(\beta_1+\beta_2)(\beta_2-\beta_3)+(\beta_1-\beta_2)(\beta_2+\beta_3)e^{2\alpha_2(c_2-c_1)}] +$$

$$(\beta_0-\beta_1)[(\beta_1-\beta_2)(\beta_2-\beta_3)+(\beta_1+\beta_2)(\beta_2+\beta_3)e^{2\alpha_2(c_2-c_1)}]e^{2\alpha_1(c_1-c_0)}\Big]$$

$$\div \Big[(\beta_0-\beta_1)[(\beta_1+\beta_2)(\beta_2-\beta_3)+(\beta_1-\beta_2)(\beta_2+\beta_3)e^{2\alpha_2(c_2-c_1)}] +$$

$$(\beta_0+\beta_1)[(\beta_1-\beta_2)(\beta_2-\beta_3)+(\beta_1+\beta_2)(\beta_2+\beta_3)e^{2\alpha_2(c_2-c_1)}]e^{2\alpha_1(c_1-c_0)}\Big]. \tag{3.136}$$

From Eqs. (3.134)-(3.136), we see that for a coil above k conducting plates the impedance is given by

$$Z = \frac{2j\pi\omega\mu n^2}{(r_2-r_1)^2(\ell_2-\ell_1)^2}\int_0^\infty \frac{1}{\alpha^3\alpha_0^2} J_0^2(r_1,r_2)\Big[(\ell_2-\ell_1) + \frac{1}{\alpha_0}[e^{-\alpha_0(\ell_2-\ell_1)} - 1]$$

$$+ \frac{1}{2\alpha_0}\frac{S_1^{(k)}}{S_0^{(k)}}[e^{-\alpha_0\ell_2} - e^{-\alpha_0\ell_1}]^2\Big]d\alpha\ , \tag{3.137}$$

where $S_1^{(k)}/S_0^{(k)}$ is obtained by replacing $(\beta_{k-2} - \beta_{k-1})$, in the expression for $S_1^{(k-1)}/S_0^{(k-1)}$, with

$$(\beta_{k-2}+\beta_{k-1})(\beta_{k-1}-\beta_k)+(\beta_{k-2}-\beta_{k-1})(\beta_{k-1}+\beta_k)e^{2\alpha_{k-1}(c_{k-1}-c_{k-2})}\ . \tag{3.138}$$

and by replacing $(\beta_{k-2} + \beta_{k-1})$ with

$$(\beta_{k-2}-\beta_{k-1})(\beta_{k-1}-\beta_k)+(\beta_{k-2}+\beta_{k-1})(\beta_{k-1}+\beta_k)e^{2\alpha_{k-1}(c_{k-1}-c_{k-2})}\ . \tag{3.139}$$

If we denote the thickness, $c_k - c_{k-1}$, of the $k^{th}$ conductor by $t_k$, then these expressions may be written as

$$(\beta_{k-2}+\beta_{k-1})(\beta_{k-1}-\beta_k)+(\beta_{k-2}-\beta_{k-1})(\beta_{k-1}+\beta_k)e^{2\alpha_{k-1}t_{k-1}} \tag{3.140}$$

and

$$(\beta_{k-2}-\beta_{k-1})(\beta_{k-1}-\beta_k)+(\beta_{k-2}+\beta_{k-1})(\beta_{k-1}+\beta_k)e^{2\alpha_{k-1}t_{k-1}} \ . \tag{3.141}$$

For example, if we choose to treat the case of a coil above four, parallel, conducting plates, then according to the above formula we may write

$$\begin{aligned}
\frac{S_1^{(4)}}{S_0^{(4)}} = \Bigg[ & (\beta_0+\beta_1)\Big[(\beta_1+\beta_3)\,[(\beta_2+\beta_2)(\beta_3-\beta_4)+(\beta_2-\beta_3)(\beta_3+\beta_4)e^{2\alpha_3(c_3-c_2)}]+ \\
& (\beta_1-\beta_2)\,[(\beta_2-\beta_3)(\beta_3-\beta_4)+(\beta_2+\beta_3)(\beta_3+\beta_4)e^{2\alpha_3(c_3-c_2)}]e^{2\alpha_2(c_2-c_1)}\Big]+ \\
& (\beta_0-\beta_1)\Big[(\beta_1-\beta_2)[(\beta_2+\beta_3)(\beta_3-\beta_4)+(\beta_2-\beta_3)(\beta_3+\beta_4)e^{2\alpha_0(c_3-c_2)}]+ \\
& (\beta_1+\beta_2)\,[(\beta_2-\beta_3)(\beta_3-\beta_4)+(\beta_2+\beta_3)(\beta_3+\beta_4)e^{2\alpha_3(c_3-c_2)}]e^{2\alpha_2(c_2-c_1)}\Big] \\
& e^{2\alpha_1(c_1-c_0)}\Bigg] \div \Bigg[(\beta_0-\beta_1)\Big[(\beta_1+\beta_2)\,[(\beta_2+\beta_3)(\beta_3-\beta_4)+(\beta_2-\beta_3) \\
& (\beta_3+\beta_4)e^{2\alpha_3(c_3-c_2)}]+(\beta_1-\beta_2)\,[(\beta_2-\beta_3)(\beta_3-\beta_4)+(\beta_2+\beta_3)(\beta_3+\beta_4) \\
& e^{2\alpha_3(c_3-c_2)}]\,e^{2\alpha_2(c_2-c_1)}\Big]+(\beta_0+\beta_1)\Big[(\beta_1-\beta_2)\,[(\beta_2+\beta_3)(\beta_3-\beta_4)+ \\
& (\beta_2-\beta_3)(\beta_3+\beta_4)e^{2\alpha_3(c_3-c_2)}]+(\beta_1+\beta_2)\,[(\beta_2-\beta_3)(\beta_3-\beta_4)+(\beta_2+\beta_3) \\
& (\beta_3+\beta_4)e^{2\alpha_3(c_3-c_2)}]\,e^{2\alpha_2(c_2-c_1)}\Big]\,e^{2\alpha_1(c_1-c_2)}\Bigg] \ .
\end{aligned} \tag{3.142}$$

Upon close scrutiny of Eq. (3.142), it is seen that $S_1^{(4)}/S_0^{(4)}$ reduces to $S_1^{(3)}/S_0^{(3)}$ when $\mu_4 = \mu_3$, $\sigma_4 = \sigma_3$ and $\varepsilon_4 = \varepsilon_3$. On the other hand, if $\mu_1 = \mu_2$, $\sigma_1 = \sigma_2$ and $\varepsilon_1 = \varepsilon_2$, then $S_1^{(4)}/S_0^{(4)}$ reduces to

$$\frac{S_1'^{(3)}}{S_0'^{(3)}} = \Big[(\beta_0+\beta_2)[(\beta_2+\beta_3)(\beta_3-\beta_4)+(\beta_2-\beta_3)(\beta_3+\beta_4)e^{2\alpha_3(c_3-c_2)}] + (\beta_0-\beta_2)$$

$$[(\beta_2-\beta_3)(\beta_3-\beta_4)+(\beta_2+\beta_3)(\beta_3+\beta_4)e^{2\alpha_3(c_3-c_2)}]e^{2\alpha_2(c_2-c_0)}\Big]$$

$$\div \Big[(\beta_0-\beta_2)[(\beta_2+\beta_3)(\beta_3-\beta_4)+(\beta_2-\beta_3)(\beta_3+\beta_4)e^{2\alpha_3(c_3-c_2)}] + (\beta_0+\beta_2)$$

$$[(\beta_2-\beta_3)(\beta_3-\beta_4)+(\beta_2+\beta_3)(\beta_3+\beta_4)e^{2\alpha_3(c_3-c_2)}]e^{2\alpha_2(c_2-c_0)}\Big] \quad , \qquad (3.143)$$

which is equal, as it should be, to $S_1^{(3)}/S_0^{(3)}$ with all subscripts greater than zero increased by unity. Similar results are obtained when $\mu_3 = \mu_2$, $\sigma_3 = \sigma_2$ and $\varepsilon_3 = \varepsilon_2$.

Further, let us suppose that below the coil there are k conducting plates, all of which have the same electromagnetic parameters, $\mu_k$, $\sigma_k$, $\varepsilon_k$, and that below these there are k' others, which have $\mu = \mu_k'$, $\sigma = \sigma_k'$ and $\varepsilon = \varepsilon_k'$. In this case, $S_1^{(k)}/S_0^{(k)}$ becomes

$$\frac{S_1'^{(k)}}{S_0'^{(k)}} = \frac{(\beta_0+\beta_k)(\beta_k-\beta_{k'})+(\beta_0-\beta_k)(\beta_k+\beta_{k'})e^{2\alpha_k(c_k-c_0)}}{(\beta_0-\beta_k)(\beta_k-\beta_{k'})+(\beta_0+\beta_k)(\beta_k+\beta_{k'})e^{2\alpha_k(c_k-c_0)}} \quad , \qquad (3.144)$$

which is, as it should be, in agreement with Eq. (3.135). In the event that $\mu_2 = \mu_{k'}$, $\sigma_k = \sigma_{k'}$, $\varepsilon_k = \varepsilon_{k'}$, then Eq. (3.144) reduces to

$$\frac{S_1^{(k)}}{S_0^{(k)}} = \frac{\beta_0-\beta_k}{\beta_0+\beta_k} \qquad (3.145)$$

as it should. Many more arguments supporting the validity of the above formula for obtaining $S_1^{(k)}/S_0^{(k)}$ can be developed; but in the interest of brevity, we shall omit them.

Since it is conventional to normalize the impedance of a coil in the presence of conductors by dividing by the magnitude of the impedance of the same coil in air, we write here the impedance of the coil in air:

$$Z_{air} = \frac{2j\pi\omega\mu n^2}{(r_2-r_1)^2(\ell_2-\ell_1)^2} \int_0^\infty \frac{1}{\alpha^3\alpha_2^2} J_0^2(r_1,r_2)\left[(\ell_2-\ell_1) + \frac{1}{\alpha_2}\left[e^{-\alpha_0(\ell_2-\ell_1)} - 1\right]\right] d\alpha \ . \tag{3.146}$$

<u>The Power Dissipated by the Eddy Currents</u>

We turn now to the calculation of the power loss due to the eddy currents that are induced in the conductors. Since the results are even more complicated than those seen thus far, we shall compute the power loss for only one conductor. Substitution of Eq. (3.92) in Eq. (2.54) gives

$$\bar{P}_6 = \pi\sigma_1\omega^2 \int_0^\infty r \int_{-c_1}^{0} \left[\int_0^\infty \frac{\mu i_0}{2} \frac{1}{\alpha\alpha_0^2} J_0(r_1,r_2)J_1(\alpha r)\right.$$

$$\frac{Q_1(e^{\alpha_0\ell_2} - e^{\alpha_0\ell_1}) - Q_0(e^{-\alpha_0\ell_2} - e^{-\alpha_0\ell_1})}{2(Q_0S_0 - Q_1S_1)\beta_1}\left([(\alpha_0+\beta_1)S_1-(\alpha_0-\beta_1)S_0]e^{-\alpha_1 z}\right.$$

$$\left.\left. - [(\alpha_0-\beta_1)S_1-(\alpha_0+\beta_1)S_0]e^{\alpha_1 z}\right) d\alpha\right]\left[\int_0^\infty \frac{\mu i_0}{2} \frac{1}{\alpha'\alpha_0'^2} J_0'(r_1,r_2)J_1(\alpha' r)\right.$$

$$\frac{Q_1'(e^{\alpha_0'\ell_2} - e^{\alpha_0'\ell_1}) - Q_1'(e^{-\alpha_0'\ell_2} - e^{-\alpha_0'\ell_1})}{2(Q_0'S_0' - Q_1'S_1')\beta_1'}\left([(\alpha_0'+\beta_1')S_1'-(\alpha_0'-\beta_1')S_0']e^{-\alpha_1' z} -\right.$$

$$[(\alpha_0'-\beta_1')S_0'-(\alpha_0'+\beta_1')S_0']e^{\alpha_1' z}\Big)d\alpha'\Big]^* \, dz\, dr \tag{3.147}$$

where the primes indicate that $\alpha = \alpha'$ in the expressions for the constants. Reversing the order of integration, using the Fourier-Bessel integral and then integrating over $\alpha'$ yield

$$\bar{P}_6 = \frac{\pi\sigma_1\omega^2\mu^2 i_0^2}{4}\int_0^\infty \frac{1}{\alpha^3\alpha_0^2} J_0^2(r_1,r_2)\int_{-c_1}^{0}\left|\frac{Q_1(e^{\alpha_0\ell_2}-e^{\alpha_0\ell_1})-Q_0(e^{-\alpha_0\ell_2}-e^{-\alpha_0\ell_1})}{2(Q_0S_0-Q_1S_1)\beta_1}\right.$$

$$\left.\left([(\alpha_0+\beta_1)S_1-(\alpha_0-\beta_0)S_0]e^{-\alpha_1 z}-[(\alpha_0-\beta_1)S_1-(\alpha_0+\beta_1)S_0]e^{\alpha_1 z}\right)\right|^2 dz\, d\alpha \,, \tag{3.148}$$

while the z integration gives

$$\bar{P}_6 = \frac{\pi\sigma_1\omega^2\mu^2 n^2 I^2}{4(r_2-r_1)^2(\ell_2-\ell_1)^2}\int_0^\infty \frac{1}{\alpha^3\alpha_0^4} J_0^2(r_1,r_2)\left|\frac{Q_1(e^{\alpha_0\ell_2}-e^{\alpha_0\ell_1})-Q_0(e^{-\alpha_0\ell_2}-e^{-\alpha_0\ell_1})}{2(Q_0S_0-Q_1S_1)\beta_1}\right|^2$$

$$\Bigg[\left|(\alpha_0+\beta_1)S_1-(\alpha_0-\beta_1)S_0\right|^2\frac{e^{2x_1c_1}-1}{2x_1}+\left|(\alpha_0-\beta_1)S_1-(\alpha_0+\beta_1)S_0\right|^2\frac{1-e^{-2x_1c_1}}{2x_1}-$$

$$j\,[(\alpha_0+\beta_1)S_1-(\alpha_0-\beta_1)S_0][(\alpha_0-\beta_1)S_1-(\alpha_0+\beta_1)S_0]^*\frac{1-e^{2jy_1c_1}}{2y_1}-$$

$$j\,[(\alpha_0-\beta_1)S_1-(\alpha_0+\beta_1)S_0][(\alpha_0+\beta_1)S_1-(\alpha_0-\beta_1)S_0]^*\frac{e^{-2jy_1c_1}-1}{2y_1}\Bigg]d\alpha \,, \tag{3.149}$$

where $x_1$ and $y_1$ are the real and imaginary parts of $\alpha_1$, respectively, and where we have used Eq. (3.81) for $i_0$. Needless to say, Eq. (3.149) is of little practical value; however, the computer integration of this

equation is quite easily accomplished in the special case of a coil above a semi-infinite plane. Hence, it is of benefit to see in what way Eq. (3.149) simplifies for that case.

This simplification is easily obtained if, in the expressions for $Q_0$, $Q_1$, $S_0$ and $S_1$, we set $\beta_i = \alpha_0 (i = 2,3,4,5)$ and then let $c_1$ approach infinity. Performing the first of these operations gives $Q_1 = 0$ and

$$Q_0 = -8\alpha_0^3 e^{2\alpha_0 t_3} \tag{3.150}$$

$$\frac{S_1}{S_0} = \frac{(\alpha_0+\beta_1)(\beta_1-\alpha_0)+(\alpha_0-\beta_1)(\beta_1+\alpha_0)e^{2\alpha_1 c_1}}{(\alpha_0-\beta_1)(\beta_1-\alpha_0)+(\alpha_0+\beta_1)(\beta_1+\alpha_0)e^{2\alpha_1 c_1}} . \tag{3.151}$$

Substitution of Eqs. (3.150) and (3.151) in Eq. (3.149) and letting $c_1$ approach infinity yield

$$\bar{P}_6 = \frac{\pi\sigma_1\omega^2\mu^2 n^2 I^2}{4(r_2-r_1)^2(\ell_2-\ell_1)^2}\int_0^\infty \frac{1}{\alpha^3\alpha_0^4} J_0^2(r_1,r_2) \frac{(e^{-\alpha_0\ell_2} - e^{-\alpha_0\ell_1})^2}{8x_1}$$

$$\left|\frac{(\alpha_0-\beta_1)^2-(\alpha_0+\beta_1)^2}{(\alpha_0+\beta_1)\beta_1}\right|^2 d\alpha \tag{3.152}$$

for the time-averaged power loss. The more realistic case of a metal of finite thickness is readily obtained by substitution of Eqs. (3.150) and (3.151) in Eq. (3.149):

$$\bar{P}_6 = \frac{\pi\sigma_1\omega^2\mu^2 n^2 I^2}{4(r_2-r_1)^2(\ell_2-\ell_1)^2}\int_0^\infty \frac{1}{\alpha^3\alpha_0^4} J_0^2(r_1,r_2) \frac{(e^{-\alpha_0\ell_2} - e^{-\alpha_0\ell_1})^2}{|S_{om}|^2}$$

$$\left([|\beta_1-\alpha_0|^2 + |\alpha_0+\beta_1|^2 e^{2x_1c_1}] \frac{e^{2x_1c_1}-1}{x_1} - \right.$$

$$\left. j\,[(\beta_1-\alpha_0)(\beta_1+\alpha_0)^* e^{-2jy_1c_1}+(\beta_1+\alpha_0)(\beta_1-\alpha_o)^*] \frac{e^{2\alpha_1c_1}-e^{2x_1c_1}}{y_1}\right) d\alpha, \tag{3.153}$$

where $S_{om}$ is a modified $S_0$ given by the denominator of Eq. (3.151). It is easily seen that Eq. (3.153) reduces to Eq. (3.152) as $c_1$ approaches infinity.

## The Electromagnetic Forces on the Conductors

We shall now make use of Eq. (2.62) and calculate the net electromagnetic force on the conductor in region VI. Taking the curl of $A^{(6)}(r,z)$ and integrating over $\theta$ yield

$$F_6 = -j\pi\omega\sigma_1 \iint A^{(6)}(r,z) \frac{\partial}{\partial z} [A^{(6)}(r,z)]^* \, r\, drdz \,, \tag{3.154}$$

which, due to the axial symmetry, is in the z-direction. Substitution of Eq. (3.92) in Eq. (3.154) and integration over r give

$$F_6 = -j\pi\omega\sigma_1 \int_0^\infty \int_{-c_1}^0 \left( \frac{\mu^2 i_0^2}{4\alpha^3\alpha_0^4} J_0^2(r_1,r_2) \left| \frac{Q_1(e^{\alpha_0\ell_2}-e^{\alpha_0\ell_1})-Q_0(e^{-\alpha_0\ell_2}-e^{-\alpha_0\ell_1})}{2(Q_0S_0 - Q_1S_1)\beta_1} \right|^2 \right.$$

$$[(\alpha_0+\beta_1)S_1-(\alpha_0-\beta_1)S_0]e^{-\alpha_1 z}-[(\alpha_0-\beta_1)S_1-(\alpha_0+\beta_1)S_0]e^{\alpha_1 z}$$

$$\left. -\alpha_1[(\alpha_0+\beta_1)S_1-(\alpha_0+\beta_1)S_0]e^{-\alpha_1 z} - \alpha_1[(\alpha_0-\beta_1)S_1-(\alpha_0+\beta_1)S_0]e^{\alpha_1 z} \right)^* d\alpha \,, \tag{3.155}$$

from which

$$F_6 = -j\,\frac{\pi\omega\sigma_1\mu^2 n^2 I^2}{4(r_2-r_1)^2(\ell_2-\ell_1)^2}\int_0^\infty \frac{1}{\alpha^3\alpha_0^4}\,J_0^2(r_1,r_2)\left|\frac{Q_1(e^{\alpha_0\ell_2}-e^{\alpha_0\ell_1})-Q_0(e^{-\alpha_0\ell_2}-e^{-\alpha_0\ell_1})}{2(Q_0S_0-Q_1S_1)\beta_1}\right|^2$$

$$\left[-\alpha_1^*\left|(\alpha_0+\beta_1)S_1-(\alpha_0-\beta_1)S_0\right|^2\frac{e^{2x_1c_1}-1}{2x_1}+\alpha_1^*\left|(\alpha_0-\beta_1)S_1-(\alpha_0+\beta_1)S_0\right|^2\right.$$

$$\frac{1-e^{-2x_1c_1}}{2x_1}-j\alpha_1^*[(\alpha_0+\beta_1)S_1-(\alpha_0-\beta_1)S_0][(\alpha_0-\beta_1)S_1-(\alpha_0+\beta_1)S_0]^*$$

$$\frac{e^{2jy_1c_1}-1}{2y_1}-j\alpha_1^*[(\alpha_0-\beta_1)S_1-(\alpha_0+\beta_1)S_0][(\alpha_0+\beta_1)S_1-(\alpha_0-\beta_1)S_0]^*$$

$$\left.\frac{1-e^{-2jy_1c_1}}{2y_1}\right]d\alpha\ , \tag{3.156}$$

where we have again used Eq. (3.81) for $i_0$. For the case of a single conductor of thickness $c_1$, Eq. (3.156) reduces to

$$F_6 = -j\,\frac{\pi\omega\sigma_1\mu^2 n^2 I^2}{4(r_2-r_1)^2(\ell_2-\ell_1)^2}\int_0^\infty \frac{2}{\alpha^3\alpha_0^2}\,J_0^2(r_1,r_2)\,\frac{(e^{-\alpha_0\ell_2}-e^{-\alpha_0\ell_1})^2}{|S_{om}|^2}\,\alpha_1^*$$

$$\left(\left[|\alpha_0+\beta_1|^2\,e^{2x_1c_1}-|\beta_1-\alpha_0|^2\frac{e^{2x_1c_1}-1}{x_1}-j[(\beta_1-\alpha_0)(\beta_1+\alpha_0)^*e^{-2jy_1c_1}-\right.\right.$$

$$\left.\left.(\beta_1+\alpha_0)(\beta_1-\alpha_0)^*]\,\frac{e^{2\alpha_1c_1}-e^{2x_1c_1}}{y_1}\right)d\alpha\ , \tag{3.157}$$

where $S_{om}$ is the same as in Eq. (3.153). Letting $c_1$ approach infinity yields the semi-infinite plane case:

$$F_6 = -j \frac{\pi\omega\sigma_1\mu^2 n^2 I^2}{4(r_2-r_1)^2(\ell_2-\ell_1)^2} \int_0^\infty \frac{2\mu_1^2}{\alpha^3\alpha_0^2} J_0^2(r_1,r_2) \frac{(e^{-\alpha_0\ell_2}-e^{-\alpha_0\ell_1})^2}{x_1[(\alpha_0\mu_1+x_1)^2+y_1^2]}$$

$$(x_1-jy_1)\, d\alpha \ , \qquad (3.158)$$

where $\mu_1$ is the relative permeability of the conductor and where $\alpha_1 \equiv x_1 + jy_1$. A brief perusal of the preceding expressions for the force shows us that the time-averaged force is a complex quantity so that when comparison with experiment is being effected only the real part of the force is of interest.

Expressions for the force, similar to those given above, may be derived for the other conductors; however, their immense complexity and little practical value preclude their being given here. Instead, we shall proceed to the subject of defects in the conductor.

## Defects in the Conductors

From Eq. (2.67), the change in the coil impedance due to the presence of a current defect in a conductor is

$$\Delta Z = \frac{3}{2} v\alpha_{22}\sigma_k\omega^2 \left(\frac{A_k}{I}\right)^2 , \qquad (3.159)$$

where the subscript k denotes the region in which the defect is located. If we assume the conductor in region III to possess a defect located at a point (r,z), then substitution of Eq. (3.89) in Eq. (3.159) yields

$$\Delta Z = \frac{3v\alpha_{22}\sigma_1\omega^2\mu^2 n^2}{8(r_2-r_1)^2(\ell_2-\ell_1)^2} \left[ \int_0^\infty \frac{1}{\alpha\alpha_0^2} J_0(r_1,r_2) J_1(\alpha r) \right.$$

$$\frac{S_0(e^{\alpha_0\ell_2}-e^{\alpha_0\ell_1})-S_1(e^{-\alpha_0\ell_2}-e^{-\alpha_0\ell_1})}{2(Q_0S_0 - Q_1S_1)\beta_4}\Big\{[(\alpha_0+\beta_4)Q_0e^{-\alpha_0t_1}- (\alpha_0-\beta_4)Q_1e^{\alpha_0t_1}]$$

$$e^{-\alpha_4(z-t_1)}- [(\alpha_0-\beta_4)Q_0e^{-\alpha_0t_1}-(\alpha_0+\beta_4)Q_1e^{\alpha_0t_1}]e^{\alpha_4(z-t_1)}\Big\}\, d\alpha\Bigg]^2 , \quad (3.160)$$

where we have again used Eq. (3.81) for $i_0$. For the special case $\sigma_1 = \sigma_2 = \sigma_3 = \sigma_5 = 0$ and $\mu_1 = \mu_2 = \mu_3 = \mu_5 = 1$; i.e., a single conductor of thickness $t_2 - t_1$, Eq. (3.160) reduces to

$$\Delta Z = \frac{3v\alpha_{22}\sigma_1\omega^2\mu^2n^2}{8(r_2-r_1)^2(\ell_2-\ell_1)^2}\Bigg[\int_0^\infty \frac{2}{\alpha\alpha_0^2} J_0(r_1,r_2)J_1(\alpha r)e^{-(\alpha_0+\alpha_4)t_1}(e^{\alpha_0\ell_2}-e^{\alpha_0\ell_1})$$

$$\alpha_0 \frac{(\alpha_0-\beta_4)e^{\alpha_4z} - (\alpha_0+\beta_4)e^{-\alpha_4z}e^{2\alpha_4t_2}}{(\alpha_0-\beta_4)^2-(\alpha_0+\beta_4)^2e^{2\alpha_4(t_2-t_1)}}\, d\alpha\Bigg]^2 , \quad (3.161)$$

since $S_1 = 0$ and

$$S_0 = 8\alpha_0^3e^{2\alpha_0c_2} \quad (3.162)$$

$$Q_1 = 2\alpha_0(\alpha_0-\beta_4)(\alpha_0+\beta_4)[1-e^{2\alpha_4(t_2-t_1)}]e^{2\alpha_0(t_3-t_2)} \quad (3.163)$$

$$Q_0 = 2\alpha_0[(\alpha_0-\beta_4)^2-(\alpha_0+\beta_4)^2e^{2\alpha_4(t_2-t_1)}]e^{2\alpha_0(t_3-t_2+t_1)} . \quad (3.164)$$

Again similar expressions may be derived for current defects located in any of the other conductors.

In this and the preceding sections, a number of special cases have been given for each quantity of interest. Obviously, a myriad of other special cases still remain; however, these remaining special cases are easily obtained by using the methods presented in each section. Hence, we shall proceed to another general case, namely, a coil encircling concentric spherical conductors.

# CHAPTER IV

## COIL ENCIRCLING TWO CONCENTRIC SPHERICAL SHELLS

### The Vector Potential of a Delta Function Current

A delta function current encircling two concentric, conducting spherical shells is shown in Fig. 6. Due to the inherent spherical symmetry, we choose to use spherical coordinates in solving the problem. Since the current flows only in the $\phi$ direction, the r and $\theta$ components of the vector potential vanish. Examination of Eqs. (2.6)-(2.8) shows us that the vector potential must thus be a solution of Eq. (2.8). Replacing $\partial/\partial t$ with $j\omega$ and writing the Laplace operator in spherical coordinates, this equation becomes

$$\frac{1}{r^2}\frac{\partial}{\partial r}\left(r^2\frac{\partial A}{\partial r}\right) + \frac{1}{r^2\sin\theta}\frac{\partial}{\partial\theta}\left(\sin\theta\frac{\partial A}{\partial\theta}\right) - \frac{A}{r^2\sin\theta} - j\omega\mu_i\sigma_i A + \omega^2\mu_i\varepsilon_i A + \mu\frac{I}{r_0}\delta(r-r_0)\delta(\theta-\theta_0) = 0 , \tag{4.1}$$

where A is the $\phi$ component of the vector potential and where the last term on the left vanishes except at $r = r_0$, $\theta = \theta_0$.

Equation (4.1) is amenable to solution by the method of separation of variables which yields the general solution

$$A(r,\theta) = \sum_{\ell=1}^{\infty}[a_\ell i_\ell(\alpha_i r) + b_\ell k_\ell(\alpha_i r)]\,[P_\ell^1(\cos\theta) + c_\ell Q_\ell^1(\cos\theta)] , \tag{4.2}$$

where $P_\ell^1(\cos\theta)$ and $Q_\ell^1(\cos\theta)$ are the associated Legendre functions of the first and second kind, respectively.

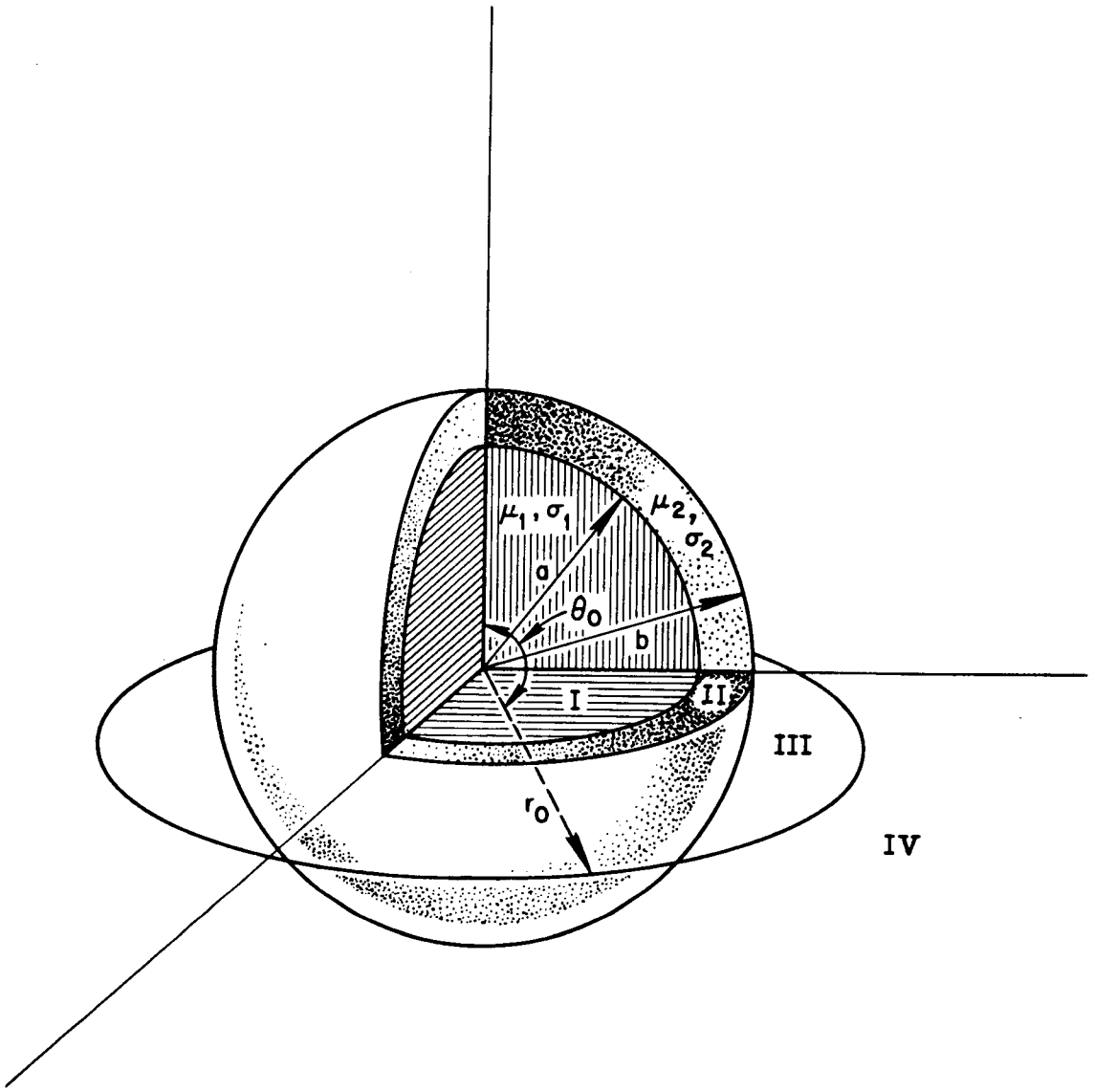


Figure 6. A delta function current encircling two, concentric, spherical shells.

$$\alpha_i \equiv \{j\omega\mu_i\sigma_i - \omega^2\mu_i\varepsilon_i\}^{1/2} , \tag{4.3}$$

and $i_\ell(\alpha_i r)$ and $k_\ell(\alpha_i r)$ are the modified spherical Bessel functions of the first and third kind, respectively:

$$i_n(z) = \sqrt{\frac{\pi}{2z}}\, I_{n+\frac{1}{2}}(z) \tag{4.4}$$

$$k_n(z) = \sqrt{\frac{\pi}{2z}}\, K_{n+\frac{1}{2}}(z) . \tag{4.5}$$

We shall require the vector potential to remain finite at $r = 0$, $r = \infty$ and $\theta = 0$, $\theta = \pi$ so that $c_\ell = 0$ in all regions while $a_\ell = 0$ in region IV and $b_\ell = 0$ in region I. Thus the solution for the various regions are

$$A^{(1)}(r,\theta) = \sum_{\ell=1}^{\infty} a_\ell^{(1)} i_\ell(\alpha_1 r) P_\ell^1(\cos\theta) , \tag{4.6}$$

$$A^{(2)}(r,\theta) = \sum_{\ell=1}^{\infty} [a_\ell^{(2)} i_\ell(\alpha_2 r) + b_\ell^{(2)} k_\ell(\alpha_2 r)] P_\ell^1(\cos\theta) , \tag{4.7}$$

$$A^{(3)}(r,\theta) = \sum_{\ell=1}^{\infty} [a_\ell^{(3)} i_\ell(\alpha_0 r) + b_\ell^{(3)} k_\ell(\alpha_0 r)] P_\ell^1(\cos\theta) , \tag{4.8}$$

$$A^{(4)}(r,\theta) = \sum_{\ell=1}^{\infty} b_\ell^{(4)} k_\ell(\alpha_0 r) P_\ell^1(\cos\theta) , \tag{4.9}$$

where the superscripts refer to the specific region and

$$\alpha_0 = j\{\omega^2\mu_i\varepsilon_i\}^{1/2} , \tag{4.10}$$

since regions III and IV are taken to be air.

If we assume $\mu_i = \mu_0$ for all i, the boundary conditions are

$$A^{(1)}(a,\theta) = A^{(2)}(a,\theta) \ , \tag{4.11}$$

$$\frac{1}{\mu_1}\frac{\partial A^{(1)}}{\partial r}\Big]_{r=a} = \frac{1}{\mu_2}\frac{\partial A^{(2)}}{\partial r}\Big]_{r=a} \ , \tag{4.12}$$

$$A^{(2)}(b,\theta) = A^{(3)}(b,\theta) \ , \tag{4.13}$$

$$\frac{1}{\mu_2}\frac{\partial A^{(2)}}{\partial r}\Big]_{r=b} = \frac{\partial A^{(3)}}{\partial r}\Big]_{r=b} \ , \tag{4.14}$$

$$A^{(3)}(r_0,\theta) = A^{(4)}(r_0,\theta) \ , \tag{4.15}$$

$$\frac{\partial A^{(3)}}{\partial r}\Big]_{r=r_0} = \frac{\partial A^{(4)}}{\partial r}\Big]_{r=r_0} - \mu\frac{I}{r_0}\,\delta(\theta-\theta_0) \ . \tag{4.16}$$

Substitution of Eqs. (4.6)-(4.9) in Eqs. (4.11)-(4.16) yields

$$\sum_{\ell=1}^{\infty} a_\ell^{(1)} i_\ell(\alpha_1 a) P_\ell^1(\cos\theta) = \sum_{\ell=1}^{\infty} [a_\ell^{(2)} i_\ell(\alpha_2 a) + b_\ell^{(2)} k_\ell(\alpha_2 a)] P_\ell^1(\cos\theta) \ , \tag{4.17}$$

$$\beta_1 \sum_{\ell=1}^{\infty} a_\ell^{(1)} i_\ell'(\alpha_1 a) P_\ell^1(\cos\theta) = \beta_2 \sum_{\ell=1}^{\infty} [a_\ell^{(2)} i_\ell'(\alpha_2 a) + b_\ell^{(2)} k_\ell'(\alpha_2 a)] P_\ell^1(\cos\theta) \ , \tag{4.18}$$

$$\sum_{\ell=1}^{\infty} [a_\ell^{(2)} i_\ell(\alpha_2 b) + b_\ell^{(2)} k_\ell(\alpha_2 b)] P_\ell^1(\cos\theta) = \sum_{\ell=1}^{\infty} [a_\ell^{(3)} i_\ell(\alpha_0 b) + b_\ell^{(3)} k_\ell(\alpha_0 b)] P_\ell^1(\cos\theta) \ , \tag{4.19}$$

$$\beta_2 \sum_{\ell=1}^{\infty} [a_\ell^{(2)} i_\ell'(\alpha_3 b) + b_\ell^{(2)} k_\ell'(\alpha_2 b)] P_\ell^1(\cos\theta) =$$

$$\alpha_0 \sum_{\ell=1}^{\infty} [a_\ell^{(3)} i_\ell'(\alpha_0 b) + b_\ell^{(3)} k_\ell'(\alpha_0 b)] P_\ell^1(\cos\theta) \ , \qquad (4.20)$$

$$\sum_{\ell=1}^{\infty} [a_\ell^{(3)} i_\ell(\alpha_0 r_0) + b_\ell^{(3)} k_\ell(\alpha_0 r_0)] P_\ell^1(\cos\theta) =$$

$$\sum_{\ell=1}^{\infty} b_\ell^{(4)} k_\ell(\alpha_0 r_0) P_\ell^1(\cos\theta) \ , \qquad (4.21)$$

$$\sum_{\ell=1}^{\infty} [a_\ell^{(3)} i_\ell'(\alpha_0 r_0) + b_\ell^{(3)} k_\ell'(\alpha_0 r_0)] P_\ell^1(\cos\theta) =$$

$$\sum_{\ell=1}^{\infty} b_\ell^{(4)} k_\ell'(\alpha_0 r_0) P_\ell^1(\cos\theta) - \mu \frac{I}{\alpha_0 r_0} \delta(\theta-\theta_0) \ , \qquad (4.22)$$

where $\beta_i = \alpha_i/\mu_i$. Multiplying Eqs. (4.17)-(4.22) by $P_\ell^1(\cos\theta) \sin\theta \, d\theta$, integrating from 0 to $\pi$ and using the orthogonality relations for the associated Legendre functions,

$$\int_0^\pi P_\ell^1(\cos\theta) P_{\ell'}^1(\cos\theta) \sin\theta \, d\theta = \frac{2\ell(\ell+1)}{2\ell+1} \delta_{\ell\ell'} \ , \qquad (4.23)$$

gives, after dropping the primes,

$$a_\ell^{(1)} i_\ell(\alpha_1 a) = a_\ell^{(2)} i_\ell(\alpha_2 a) + b_\ell^{(2)} k_\ell(\alpha_2 a) \ , \qquad (4.24)$$

$$\beta_1 a_\ell^{(1)} i_\ell'(\alpha_1 a) = \beta_2 a_\ell^{(2)} i_\ell'(\alpha_2 a) + \beta_2 b_\ell^{(2)} k_\ell'(\alpha_2 a) \ , \qquad (4.25)$$

$$a_\ell^{(2)} i_\ell(\alpha_2 b) + b_\ell^{(2)} k_\ell(\alpha_2 b) = a_\ell^{(3)} i_\ell(\alpha_0 b) + b_\ell^{(3)} k_\ell(\alpha_0 b) \ , \qquad (4.26)$$

$$\beta_2 a_\ell^{(2)} i_\ell'(\alpha_2 b) + \beta_2 b_\ell^{(2)} k_\ell'(\alpha_2 b) = \alpha_0 a_\ell^{(3)} i_\ell'(\alpha_0 b) + \alpha_0 b_\ell^{(3)} k_\ell'(\alpha_0 b) \ , \tag{4.27}$$

$$a_\ell^{(3)} i_\ell(\alpha_0 r_0) + b_\ell^{(3)} k_\ell(\alpha_0 r_0) = b_\ell^{(4)} k_\ell(\alpha_0 r_0) \tag{4.28}$$

$$a_\ell^{(3)} i_\ell'(\alpha_0 r_0) + b_\ell^{(3)} k_\ell'(\alpha_0 r_0) = b_\ell^{(4)} k_\ell'(\alpha_0 r_0) - \frac{2\ell + 1}{2\ell(\ell + 1)} \frac{\mu I \sin\theta_0}{\alpha_0 r_0} P_\ell^1(\cos\theta_0) \ . \tag{4.29}$$

Equations (4.24)-(4.29) constitute a set of six linear, inhomogeneous equations in six unknowns, and their solutions are

$$a_\ell^{(1)} = \frac{\mu I r_0 \sin\theta_0}{4a^2 b^2 \alpha_2^2} \frac{(2\ell + 1)\pi}{\ell(\ell + 1) D_\ell} \beta_2 k_\ell(\alpha_0 r_0) P_\ell^1(\cos\theta_0) \ , \tag{4.30}$$

$$a_\ell^{(2)} = -\frac{\mu I r_0 \sin\theta_0}{2b^2} \frac{2\ell + 1}{\ell(\ell + 1) D_\ell} k_\ell(\alpha_0 r_0) [\beta_1 i_\ell'(\alpha_1 a) k_\ell(\alpha_2 a) - \beta_2 i_\ell(\alpha_1 a) k_\ell'(\alpha_2 a)] P_\ell^1(\cos\theta_0) \ , \tag{4.31}$$

$$b_\ell^{(2)} = +\frac{\mu I r_0 \sin\theta_0}{2b^2} \frac{2\ell + 1}{\ell(\ell + 1) D_\ell} k_\ell(\alpha_0 r_0) [\beta_1 i_\ell(\alpha_2 a) i_\ell'(\alpha_1 a) - \beta_2 i_\ell(\alpha_1 a) i_\ell'(\alpha_2 a)] P_\ell^1(\cos\theta_0) \ , \tag{4.32}$$

$$a_\ell^{(3)} = \frac{\mu I r_0 \sin\theta_0}{\pi} \frac{2\ell + 1}{\ell(\ell + 1)} \alpha_0 k_\ell(\alpha_0 r_0) P_\ell^1(\cos\theta_0) \ , \tag{4.33}$$

$$b_\ell^{(3)} = \frac{\mu I r_0 \sin\theta_0}{2} \frac{2\ell + 1}{\ell(\ell + 1)} \frac{k_\ell(\alpha_0 r_0)}{k_\ell(\alpha_0 b)} \left( \frac{k_\ell(\alpha_2 b)}{b^2 D_\ell} [\beta_1 i_\ell(\alpha_2 a) i_\ell'(\alpha_1 a) - \right.$$

$$\beta_2 i_\ell(\alpha_1 a) i'_\ell(\alpha_2 a)] - \frac{i_\ell(\alpha_2 b)}{b^2 D_\ell} [\beta_1 i'_\ell(\alpha_1 a) k_\ell(\alpha_2 a) - \beta_2 i_\ell(\alpha_1 a)$$

$$k'_\ell(\alpha_2 a)] - \frac{2\alpha_0}{\pi} i_\ell(\alpha_0 b) \Bigg) P^1_\ell(\cos\theta_0) \ , \tag{4.34}$$

$$b^{(4)}_\ell = \frac{\mu I r_0 \sin\theta_0}{2} \ \frac{2\ell + 1}{\ell(\ell + 1)} k_\ell(\alpha_0 r_0) \Bigg( \frac{k_\ell(\alpha_2 b)}{b^2 D_\ell k_\ell(\alpha_0 b)} [\beta_1 i_\ell(\alpha_2 a) i'_\ell(\alpha_1 a)$$

$$-\beta_2 i_\ell(\alpha_1 a) i'_\ell(\alpha_2 a)] - \frac{i_\ell(\alpha_2 b)}{b^2 D_\ell k_\ell(\alpha_0 b)} [\beta_1 i'_\ell(\alpha_1 a) k_\ell(\alpha_2 a) -$$

$$\beta_2 i_\ell(\alpha_1 a) k'_\ell(\alpha_2 b)] - \frac{2\alpha_0}{\pi} [\frac{i_\ell(\alpha_0 b)}{k_\ell(\alpha_0 b)} - \frac{i_\ell(\alpha_0 r_0)}{k_\ell(\alpha_0 r_0)}] \Bigg) P^1_\ell(\cos\theta_0) \ , \tag{4.35}$$

where

$$D_\ell = [\alpha_0 k_\ell(\alpha_2 b) k'_\ell(\alpha_0 b) - \beta_2 k_\ell(\alpha_0 b) k'_\ell(\alpha_2 b)][\beta_1 i_\ell(\alpha_2 a) i'_P(\alpha_1 a) - \beta_2 i_P(\alpha_1 a)$$

$$i'_\ell(\alpha_2 a)] - [\alpha_0 i_\ell(\alpha_2 b) k'_\ell(\alpha_0 b) - \beta_2 i'_\ell(\alpha_2 b) k_\ell(\alpha_0 b)]$$

$$[\beta_1 i'_\ell(\alpha_1 a) k_\ell(\alpha_2 a) - \beta_2 i_\ell(\alpha_1 a) k'_\ell(\alpha_2 a)] \ . \tag{4.36}$$

## The Vector Potential of a Finite Current

The solutions given by Eqs. (4.6)-(4.9) with the constants given by Eqs. (4.30)-(4.35) give the vector potential in the various regions for a delta function current. The problem of a finite size coil carrying a current I may now be solved by use of Eq. (2.17). In the interest of simplicity we shall assume the coil to be an annulus bounded by

conical and spherical surfaces as shown in Fig. 7. It is very important to note that Eq. (2.17) does not present the complete picture, for in the finite size coil case there exists a region which was absent in the delta function current case, i.e., the spherical shell containing the coil.

At a point, $(r,\theta)$, in this region, the vector potential is given by

$$A^{(3,4)}(r,\theta) = \frac{2nI}{(\theta_2-\theta_1)(r_2^2-r_1^2)} \int_{\theta_1}^{\theta_2} \left[ \int_{r_1}^{r} \frac{A^{(4)}(r,\theta)}{i_0} r_0 dr_0 + \right.$$

$$\left. \int_{r}^{r_2} \frac{A^{(3)}(r,\theta)}{i_0} r_0 dr_0 \right] d\theta_0 \ , \tag{4.37}$$

i.e., for the part of the coil inside the point in question, the contribution to the vector potential is $A^{(4)}(r,\theta)$ while for the part outside the point, the contribution is $A^{(3)}(r,\theta)$. The explicit dependence of $A^{(3)}(r,\theta)$ and $A^{(4)}(r,\theta)$ on $r_0$ and $\theta_0$ is exhibited by Eqs. (4.33)-(4.35). Substitution of Eqs. (4.8) and (4.9) with Eqs. (4.33)-(4.35) in Eq. (4.37) yields

$$A^{(3,4)}(r,\theta) = \frac{2\mu nI}{(\theta_2-\theta_1)(r_2^2-r_1^2)} \sum_{\ell=1}^{\infty} \frac{2\ell+1}{2\ell(\ell+1)} P_\ell^1(\cos\theta) \int_{\theta_1}^{\theta_2} \sin\theta_0 P_\ell^1(\cos\theta) d\theta_0$$

$$\left( [S_\ell \int_{r_1}^{r_2} r_0^2 k_\ell(\alpha_0 r_0) dr_0 + \frac{2\alpha_0}{\pi} \int_{r_1}^{r} r_0^2 i_\ell(\alpha_0 r_0) dr_0] k_\ell(\alpha_0 r) \right.$$

$$\left. + \frac{2\alpha_0}{\pi} i_\ell(\alpha_0 r) \int_{r}^{r_2} r_0^2 k_\ell(\alpha_0 r_0) \, dr_0 \right) \ , \tag{4.38}$$

where

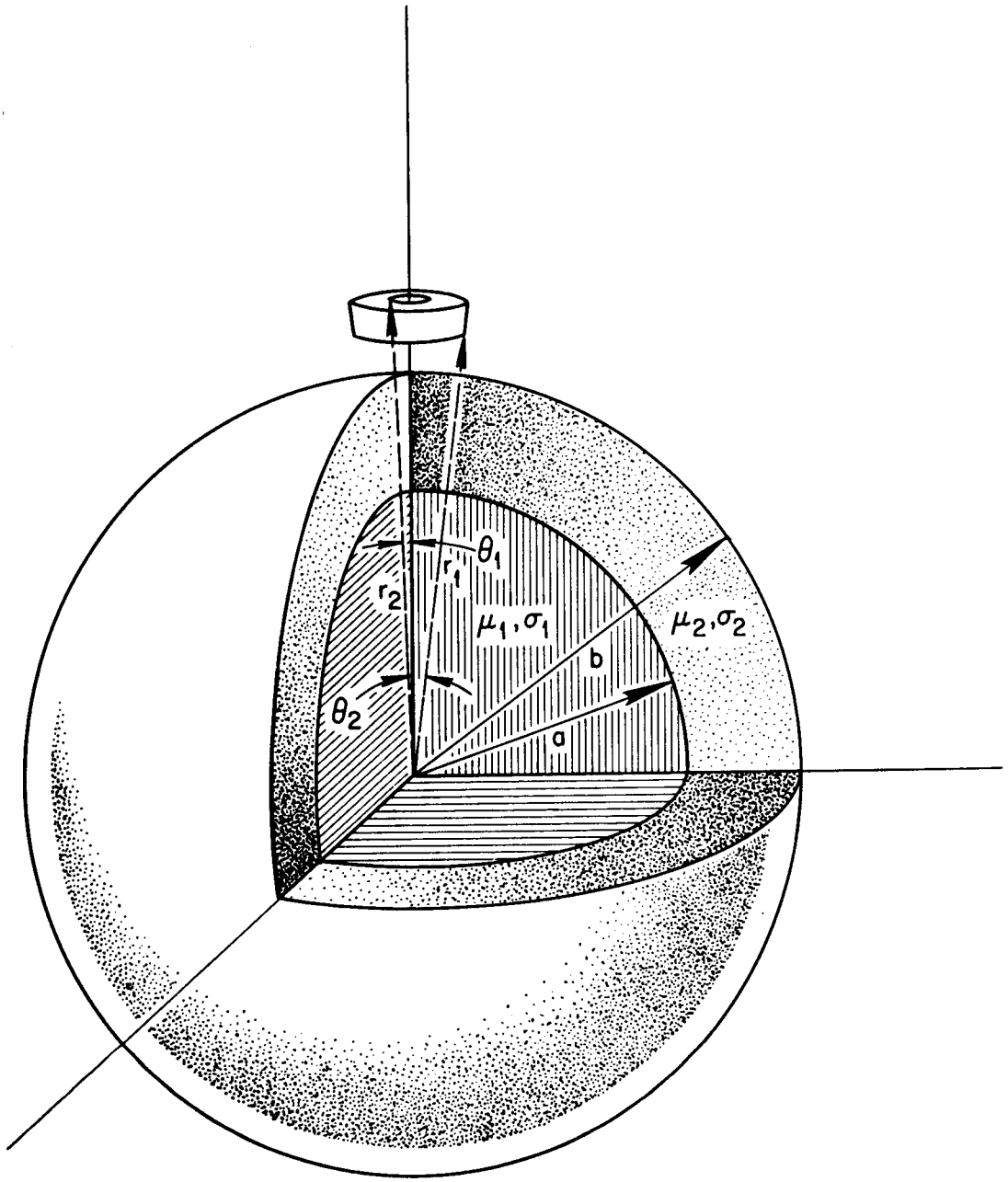


Figure 7. A coil of finite cross section near two, concentric, spherical shells.

$$S_\ell = \left( \frac{k_\ell(\alpha_2 b)}{b^2 D_\ell} [\beta_1 i_\ell(\alpha_2 a) i'_\ell(\alpha_1 a) - \beta_2 i_\ell(\alpha_1 a) i'_\ell(\alpha_2 a)] - \frac{i_\ell(\alpha_2 b)}{b^2 D} \right.$$

$$\left. [\beta_1 i'_\ell(\alpha_1 a) k_\ell(\alpha_2 a) - \beta_2 i_\ell(\alpha_1 a)] k'_\ell(\alpha_2 a)] - \frac{2\alpha_0}{\pi} i_\ell(\alpha_0 b) \right) \div k_\ell(\alpha_0 b). \tag{4.39}$$

If we define

$$i_\ell(r_1, r_2) \equiv \int_{\alpha_0 r_1}^{\alpha_0 r_2} x^2 i_\ell(x) dx \ , \tag{4.40}$$

$$k_\ell(r_1, r_2) \equiv \int_{\alpha_0 r_1}^{\alpha_0 r_2} x^2 k_\ell(x) dx \ , \tag{4.41}$$

$$P_\ell^1(\theta_1, \theta_0) \equiv \int_{\theta_1}^{\theta_2} \sin\theta_0 P_\ell^1(\cos\theta_0) d\theta_0 \ , \tag{4.42}$$

then Eq. (4.38) may be written as

$$A^{(3,4)}(r,\theta) = \frac{2\mu n I}{(\theta_2 - \theta_1)(r_2^2 - r_1^2)} \sum_{\ell=1}^{\infty} \frac{2\ell + 1}{2\ell(\ell + 1)} P_\ell^1(\theta_1, \theta_2) \ P_\ell^1(\cos\theta) \ \frac{1}{\alpha_0^3}$$

$$\left[ S_\ell k_\ell(r_1, r_2) k_\ell(\alpha_0 r) + \frac{2\alpha_0}{\pi} [i_\ell(r_1, r) k_\ell(\alpha_0 r) + k_\ell(r_1, r_2) i_\ell(\alpha_0 r)] \right] . \tag{4.43}$$

Substitution of Eqs. (4.30)-(4.35) in Eqs. (4.6)-(4.9) and the results in Eq. (2.17) yields

$$A^{(1)}(r,\theta) = \frac{2\mu nI}{(\theta_2-\theta_1)(r_2^2-r_1^2)} \sum_{\ell=1}^{\infty} \frac{2\ell+1}{2\ell(\ell+1)D_\ell} P_\ell^1(\theta_1,\theta_2)\ P_\ell^1(\cos\theta)$$

$$\frac{\pi\beta_2}{2a^2b^2\alpha_2^2\alpha_0^3} k_\ell(r_1,r_2) i_\ell(\alpha_1 r)\ , \tag{4.44}$$

$$A^{(2)}(r,\theta) = \frac{2\mu nI}{(\theta_2-\theta_1)(r_2^2-r_1^2)} \sum_{\ell=1}^{\infty} \frac{2\ell+1}{2\ell(\ell+1)D_\ell} P_\ell^1(\theta_1,\theta_2)\ P_\ell^1(\cos\theta)$$

$$\frac{k_\ell(r_1,r_2)}{\alpha_0^3 b^2} \Big( -[\beta_1 i_\ell'(\alpha_1 a) k_\ell(\alpha_2 a) - \beta_2 i_\ell(\alpha_1 a) k_\ell'(\alpha_2 a)]$$

$$i_\ell(\alpha_2 r) + [\beta_1 i_\ell'(\alpha_1 a) i_\ell(\alpha_2 a) - \beta_2 i_\ell(\alpha_1 a) i_\ell'(\alpha_2 a)] k_\ell(\alpha_2 r) \Big)\ , \tag{4.45}$$

$$A^{(3)}(r,\theta) = \frac{2\mu nI}{(\theta_2-\theta_1)(r_2^2-r_1^2)} \sum_{\ell=1}^{\infty} \frac{2\ell+1}{2\ell(\ell+1)} P_\ell^1(\theta_1,\theta_2)\ P_\ell^1(\cos\theta)$$

$$\frac{k_\ell(r_1,r_2)}{\alpha_0^3} \left[\frac{2\alpha_0}{\pi} i_\ell(\alpha_0 r) + S_\ell k_\ell(\alpha_0 r)\right]\ , \tag{4.46}$$

$$A^{(4)}(r,\theta) = \frac{2\mu nI}{(\theta_2-\theta_1)(r_2^2-r_1^2)} \sum_{\ell=1}^{\infty} \frac{2\ell+1}{2\ell(\ell+1)} P_\ell^1(\theta_1,\theta_2)\ P_\ell^1(\cos\theta)$$

$$\frac{1}{\alpha_0^3} \left[S_\ell k_\ell(r_1,r_2) + \frac{2\alpha_0}{\pi} i_\ell(r_1,r_2)\right] k_\ell(\alpha_0 r)\ , \tag{4.47}$$

for the vector potential in the various regions due to a current I flowing in a coil of cross sectional area $(\theta_2-\theta_1)(r_2^2-r_1^2)/2$. With Eqs. (4.43)-

(4.47) any number of physically observable phenomena may be calculated. Before attempting these calculations, however, we shall consider some limiting cases.

First let us suppose that the relative permeability of each region is unity and at the same time the conductivity of each region vanishes. In this case, if we assume $\varepsilon_i = \varepsilon_0$ for all i, $S_\ell = 0$ and

$$D_\ell = \frac{\pi^2}{4\alpha_0^2 a^2 b^2} , \tag{4.48}$$

so that

$$A^{(1)}(r,\theta) = A^{(2)}(r,\theta) = A^{(3)}{}_{r,\theta}) = \frac{2\mu nI}{(\theta_2-\theta_1)(r_2^2-r_1^2)} \sum_{\ell=1}^{\infty} \frac{2\ell+1}{\ell(\ell+1)} P_\ell^1(\theta_1,\theta_2)$$

$$P_\ell^1(\cos\theta) \frac{k_\ell(r_1,r_2)}{\pi\alpha_0^2} i_\ell(\alpha_0 r) \tag{4.49}$$

$$A^{(3,4)}(r,\theta) = \frac{2\mu nI}{(\theta_2-\theta_1)(r_2^2-r_1^2)} \sum_{\ell=1}^{\infty} \frac{2\ell+1}{\ell(\ell+1)} P_\ell^1(\theta_1,\theta_2)\, P_\ell^1(\cos\theta) \frac{1}{\pi\alpha_0^2}$$

$$[i_\ell(r_1,r)k_\ell(\alpha_0 r) + k_\ell(r,r_2)i_\ell(\alpha_0 r)] , \tag{4.50}$$

$$A^{(4)}(r,\theta) = \frac{2\mu nI}{(\theta_2-\theta_1)(r_2^2-r_1^2)} \sum_{\ell=1}^{\infty} \frac{2\ell+1}{\ell(\ell+1)} P_\ell^1(\theta_1,\theta_2)\, P_\ell^1(\cos\theta)$$

$$\frac{i_\ell(r_1,r_2)}{\pi\alpha_0^2} k_\ell(\alpha_0 r) . \tag{4.51}$$

Another case of interest is that for which $\mu_1 = 1$ and $\sigma_1 = 0$, i.e., the case of a coil outside a spherical shell of thickness (b-a). In this case

$$D_\ell + [\alpha_0 k_\ell(\alpha_2 b)k'_\ell(\alpha_0 b) - \beta_2 k_\ell(\alpha_0 b)k'_\ell(\alpha_2 b)][\alpha_0 i_\ell(\alpha_2 a)i'_\ell(\alpha_0 a) -$$

$$\beta_2 i_\ell(\alpha_0 a)i'_\ell(\alpha_2 a)] - [\alpha_0 i_\ell(\alpha_2 b)k'_\ell(\alpha_0 b) - \beta_2 i'_\ell(\alpha_2 b)k_\ell(\alpha_0 b)]$$

$$[\alpha_0 i'_\ell(\alpha_0 a)k_\ell(\alpha_2 a) - \beta_2 i_\ell(\alpha_0 a)k'_\ell(\alpha_2 a)] \tag{4.52}$$

and

$$S_\ell = \left(\frac{k_\ell(\alpha_2 b)}{b^2 D_\ell}[\alpha_0 i_\ell(\alpha_2 a)i'_\ell(\alpha_0 a) - \beta_2 i_\ell(\alpha_0 a)i'_\ell(\alpha_2 a)] - \frac{i_\ell(\alpha_2 b)}{b^2 D_\ell}\right.$$

$$\left.[\alpha_0 i'_\ell(\alpha_0 a)k_\ell(\alpha_2 a) - \beta_2 i_\ell(\alpha_0 a)k'_\ell(\alpha_2 a)] - \frac{2\alpha_0}{\pi} i_\ell(\alpha_0 b)\right) \div k_\ell(\alpha_0 b), \tag{4.53}$$

so that

$$A^{(1)}(r,\theta) = \frac{2\mu nI}{(\theta_2-\theta_1)(r_2^2-r_1^2)} \sum_{\ell=1}^{\infty} \frac{2\ell+1}{2\ell(\ell+1)D_\ell} P_\ell^1(\theta_1,\theta_2)\, P_\ell^1(\cos\theta)$$

$$\frac{\pi\beta_2}{2a^2b^2\alpha_2^2\alpha_0^3} k_\ell(r_1,r_2)i_\ell(\alpha_1 r)\ , \tag{4.54}$$

$$A^{(2)}(r,\theta) = \frac{2\mu nI}{(\theta_2-\theta_1)(r_2^2-r_1^2} \sum_{\ell=1}^{\infty} \frac{2\ell+1}{2\ell(\ell+1)D_\ell} P_\ell^1(\theta_1,\theta_2)\, P_\ell^1(\cos\theta)\, \frac{k_\ell(r_1,r_2)}{\alpha_0^3 b^2}$$

$$\Big[-[\alpha_0 i_\ell'(\alpha_0 a)k_\ell(\alpha_2 a) - \beta_2 i_\ell(\alpha_0 a)k_\ell'(\alpha_2 a)]i_\ell(\alpha_2 r) + [\alpha_0 i_\ell'(\alpha_0 a)$$

$$i_\ell(\alpha_2 a) - \beta_2 i_\ell(\alpha_0 a)i_\ell'(\alpha_2 a)]k_\ell(\alpha_2 r)\Big] \quad , \tag{4.55}$$

$$A^{(3)}(r,\theta) = \frac{2\mu nI}{(\theta_2-\theta_1)(r_2^2-r_1^2)} \sum_{\ell=1}^{\infty} \frac{2\ell+1}{2\ell(\ell+1)} P_\ell^1(\theta_1,\theta_2)\, P_\ell^1(\cos\theta)$$

$$\frac{k_\ell(r_1,r_2)}{\alpha_0^3} \left[\frac{2\alpha_0}{\pi} i_\ell(\alpha_0 r) + S_\ell k_\ell(\alpha_0 r)\right] \quad , \tag{4.56}$$

$$A^{(3,4)}(r,\theta) = \frac{2\mu nI}{(\theta_2-\theta_1)(r_2^2-r_1^2)} \sum \frac{2\ell+1}{2\ell(\ell+1)} p_\ell^1(\theta_1,\theta_2)\, P_\ell^1(\cos\theta)\, \frac{1}{\alpha_0^3}$$

$$\Big[S_\ell k_\ell(r_1,r_2)k_\ell(\alpha_0 r) + \frac{2\alpha_0}{\pi}\,[i_\ell(r_1,r)k_\ell(\alpha_0 r) + k_\ell(r,r_2)\, i_\ell(\alpha_0 r)]\Big] \quad , \tag{4.57}$$

$$A^{(4)}(r,\theta) = \frac{2\mu nI}{(\theta_2-\theta_1)(r_2^2-r_1^2)} \sum_{\ell=1}^{\infty} \frac{2\ell+1}{2\ell(\ell+1)} P_\ell^1(\theta_1,\theta_2)\, P_\ell^1(\cos\theta)\, \frac{1}{\alpha_0^3}$$

$$[S_\ell k_\ell(r_1,r_2) + \frac{2\alpha_0}{\pi} i_\ell(r_1,r_2)]k_\ell(\alpha_0 r) \quad , \tag{4.58}$$

where we have assumed $\varepsilon_i = \varepsilon_0$ for all i.

Yet another interesting case is that of a coil outside a conducting sphere, which we obtain by allowing a to approach zero in Eqs. (4.52)-(4.58):

$$A^{(2)}(r,\theta) = \frac{2\mu nI}{(\theta_2-\theta_1)(r_2^2-r_1^2)} \sum_{\ell=1}^{\infty} \frac{2\ell+1}{2\ell(\ell+1)} P_\ell^1(\theta_1,\theta_2)\ P_\ell^1(\cos\theta)$$

$$\frac{k_\ell(r_1,r_2)}{\alpha_0^3 b^2 D_\ell'}\ i_\ell(\alpha_2 r)\ , \tag{4.59}$$

$$A^{((3)}(r,\theta) = \frac{2\mu nI}{(\theta_2-\theta_1)(r_2^2-r_1^2)} \frac{2\ell+1}{2\ell(\ell+1)} P_\ell^1(\theta_1,\theta_2)\ P_\ell^1(\cos\theta)$$

$$\frac{k_\ell(r_1,r_2)}{\alpha_0^3}\ [\frac{2\alpha_0}{\pi}\ i_\ell(\alpha_0 r) + S_\ell' k_\ell(\alpha_0 r)]\ , \tag{4.60}$$

$$A^{(3,4)}(r,\theta) = \frac{2\mu nI}{(\theta_2-\theta_1)(r_2^2-r_1^2)} \sum_{\ell=1}^{\infty} \frac{2\ell+1}{2\ell(\ell+1)} P_\ell^1(\theta_1,\theta_2)\ P_\ell^1(\cos\theta)\ \frac{1}{\alpha_0^3}$$

$$\left(S_\ell' k_\ell(r_1,r_2) k_\ell(\alpha_0 r) + \frac{2\alpha_0}{\pi}\ [i_\ell(r_1,r) k_\ell(\alpha_0 r) + k_\ell(r,r_2) i_\ell(\alpha_0 r)]\right)\ , \tag{4.61}$$

$$A^{(4)}(r,\theta) = \frac{2\mu nI}{(\theta_2-\theta_1)(r_2^2-r_1^2)} \sum_{\ell=1}^{\infty} \frac{2\ell+1}{2\ell(\ell+1)} P_\ell^1(\theta_1,\theta_2)\ P_\ell^1(\cos\theta)\ \frac{1}{\alpha_0^3}$$

$$[S_\ell' k_\ell(r_1,r_2) + \frac{2\alpha_0}{\pi}\ i_\ell(r_1,r_2)] k_\ell(\alpha_0 r)\ , \tag{4.62}$$

where

$$S_\ell' = [\frac{1}{b^2 D_\ell'}\ i_\ell(\alpha_2 b) - \frac{2\alpha_0}{\pi}\ i_\ell(\alpha_0 b)] \div k_\ell(\alpha_0 b) \tag{4.63}$$

and

$$D'_\ell = \alpha_0 i_\ell(\alpha_2 b)k'_\ell(\alpha_0 b) - \beta_2 i'_\ell(\alpha_2 b)k_\ell(\alpha_0 b) \ . \tag{4.64}$$

As expected, the same results are obtained if we let $\mu_1 = \mu_2$ and $\sigma_1 = \sigma_2$ in Eqs. (4.52)-(4.58).

At this point, we shall conclude our discussion of the vector potential and turn to the calculation of some physically observable phenomena.

## The Voltage Induced by a Finite Current

Now let us suppose that another annular coil also bounded by conical and spherical surfaces is placed inside the coil at hand. One can then ask what is the voltage induced in this second coil. The answer of course is easily obtained by use of Eq. (2.26) and Eq. (4.43). Substituting the latter in the former and performing the r and θ integrations yield

$$V = \frac{j8\pi\omega\mu nn'I}{(\theta'_2-\theta'_1)(r'^2_2-r'^2_1)(\theta_2-\theta_1)(r^2_2-r^2_1)} \sum_{\ell=1}^{\infty} \frac{2\ell+1}{2\ell(\ell+1)} P^1_\ell(\theta_1,\theta_2)\, P^1_\ell(\theta'_1,\theta'_2)\, \frac{1}{\alpha_0^3}$$

$$\left[\frac{S_\ell}{\alpha_0^3} k_\ell(r_1,r_2)k_\ell(r'_1,r'_2) + \frac{2\alpha_0}{\pi} g_\ell(r'_1,r'_2)\right] , \tag{4.65}$$

where the primes refer to the second coil and where

$$g_\ell(r'_1,r'_2) = \int_{r'_1}^{r'_2} r^2[i_\ell(r_1,r)k_\ell(\alpha_0 r) + k_\ell(r,r_2)i_\ell(\alpha_0 r)]dr \ . \tag{4.66}$$

Obviously, Eq. (4.65) is valid only when the second coil is in region III-IV.

If instead we place the second coil in region IV, then A in Eq. (2.26) is identically equal to $A^{(4)}(r,\theta)$ given by Eq. (4.47), while if the coil is placed so that part of it lies in region III-IV and the remainder in region III, Eq. (2.26) becomes

$$V = \frac{j4\pi\mu n'}{(\theta_2'-\theta_1')(r_2'^2-r_1'^2)} \int_{\theta_1'}^{\theta_2'} \sin\theta \left[ \int_{r_1'}^{r_2'} r^2 A^{(3)}(r,\theta)\, dr + \right.$$

$$\left. \int_{r_1}^{r_2'} r^2 A^{(3,4)}(r,\theta)\, dr \right] d\theta \ . \tag{4.67}$$

On the other hand, if we let $\mu_1 = 1$ and $\sigma_1 = 0$ and place the coil in region I, then with $D_\ell$ and $S_\ell$ given by Eqs. (4.52) and (4.53), respectively, the induced voltage is

$$V = \frac{j8\pi\omega\mu nn'I}{(\theta_2'-\theta_1')(r_2'^2-r_1'^2)(\theta_2-\theta_1)(r_2^2-r_1^2)} \sum_{\ell=1}^{\infty} \frac{2\ell+1}{2\ell(\ell+1)} P_\ell^1(\theta_1,\theta_2)\, P_\ell^1(\theta_1',\theta_2') \frac{1}{\alpha_0^6}$$

$$[S_\ell k_\ell(r_1,r_2) + \frac{2\alpha_0}{\pi} i_\ell(r_1,r_2)] k_\ell(r_1',r_2') \ . \tag{4.68}$$

In each of the cases given by Eqs. (4.65)-(4.68), the mutual inductance of the two coaxial coils is easily obtained by the use of Eq. (2.35) from which we see that division of these equations by $j\omega I$ is all that is necessary.

## The Impedance of a Finite Cross Section Coil

To effect the calculation of coil impedance (an extremely important quantity), we must first determine the self induced voltage. To this end, we substitute Eq. (4.43) in Eq. (2.28) or, equivalently, let the dimension of the two coils in Eq. (4.65) become the same. Choosing the latter alternative yields

$$V = \frac{j8\pi\omega\mu n^2 I}{(\theta_2-\theta_1)^2(r_2^2-r_1^2)^2} \sum_{\ell=1}^{\infty} \frac{2\ell+1}{2\ell(\ell+1)} [P_\ell^1(\theta_1,\theta_2)]^2 \frac{1}{\alpha_0^3}$$

$$\left[\frac{S_\ell}{\alpha_0^3} [k_\ell(r_1,r_2)]^2 + \frac{2\alpha_0}{\pi} g_\ell(r_1,r_2)\right], \tag{4.69}$$

which we substitute in Eq. (2.42) to obtain

$$Z = \frac{j8\pi\omega\mu n^2}{(\theta_2-\theta_1)^2(r_2^2-r_1^2)^2} \sum_{\ell=1}^{\infty} \frac{2\ell+1}{2\ell(\ell+1)} [P_\ell^1(\theta_1,\theta_2)]^2$$

$$\left[\frac{S_\ell}{\alpha_0^3} [k_\ell(r_1,r_2)]^2 + \frac{2\alpha_0}{\pi} g_\ell(r_1,r_2)\right] \tag{4.70}$$

for the coil impedance. For the case of a coil outside a spherical shell, the impedance is given by Eq. (4.70) with $D_\ell$ and $S_\ell$ given by Eqs. (4.52) and (4.53), respectively. On the other hand, for a coil outside a sphere Eq. (4.70) yields the correct result if we replace $S_\ell$ with $S_\ell'$, which is given by Eq. (4.63).

Since it is conventional to normalize the impedance of a coil in the presence of conductors by dividing by the magnitude of the impedance

of the same coil in air, we write here the impedance of the coil in air:

$$Z_{air} = \frac{j8\pi\omega\mu n^2}{(\theta_2-\theta_1)^2(r_2^2-r_1^2)^2} \sum_{\ell=1}^{\infty} \frac{2\ell + 1}{\ell(\ell + 1)} [P_\ell^1(\theta_1,\theta_2)]^2 \frac{g_\ell(r_1,r_2)}{\pi\alpha_0^2} . \tag{4.71}$$

<u>The Power Dissipated by the Eddy Currents</u>

We turn now to the calculation of the power loss due to the eddy currents which are induced in the conductors. Let us assume that we are interested in the power loss in region I. Substitution of Eq. (4.44) in Eq. (2.54) gives

$$\bar{P}_1 = \frac{4\pi\omega^2\mu^2\sigma_1 n^2 I^2}{(\theta_2-\theta_1)^2(r_2^2-r_1^2)^2} \int_0^a\int_0^\pi \sum_{\ell=1}^{\infty} \sum_{\ell=1}^{\infty} \left[\frac{2\ell + 1}{2\ell(\ell + 1)D_\ell} \frac{2\ell' + 1}{2\ell'(\ell' + 1)D_{\ell'}^*} P_\ell^1(\theta_1,\theta_2)\right.$$

$$P_{\ell'}^1(\theta_1,\theta_2)\ P_\ell^1\ (\cos\theta)\, P_{\ell'}^1\ (\cos\theta)\ \frac{\pi^2}{4a^4b^4}\left|\frac{\beta_2}{\alpha_2^2\alpha_0^3}\right|^2 k_\ell(r_1,r_2)$$

$$\left. k_{\ell'}(r_1,r_2)^* i_\ell(\alpha_1 r) i_\ell(\alpha_1 r)^*\right] r^2 \sin\theta\, d\theta\, dr . \tag{4.72}$$

Carrying out the $\theta$ integration and making use of Eq. (4.23) yield, upon summing over $\ell'$,

$$\bar{P}_1 = \frac{4\pi\omega^2\mu^2\sigma_1 n^2 I^2}{(\theta_2-\theta_1)^2(r_2^2-r_1^2)^2} \sum_{\ell=1}^{\infty} \frac{2\ell + 1}{2\ell(\ell + 1)|D_\ell|^2} [P_\ell^1(\theta_1,\theta_2)]^2$$

$$\frac{\pi^2}{4a^4b^4}\left|\frac{\beta_2}{\alpha_2^2\alpha_0^2} k_\ell(r_1,r_2)\right|^2 \int_0^a r^2\ [x_\ell^2(r) + y_\ell^2(r)]\ dr , \tag{4.73}$$

where $x_\ell(r)$ and $y_\ell(r)$ are the real and imaginary parts of $i_\ell(\alpha_1 r)$, respectively. Similarly, the power dissipated by the eddy currents in region II is

$$\bar{P}_2 = \frac{4\pi\omega^2\mu^2\sigma_2 n^2 I^2}{(\theta_2-\theta_1)^2(r_2^2-r_1^2)^2} \sum_{\ell=1}^{\infty} \frac{2\ell+1}{2\ell(\ell+1)|D_\ell|^2} [P_\ell^1(\theta_1,\theta_2)]^2$$

$$\left|\frac{1}{\alpha_0^3 b^2} k_\ell(r_1,r_2)\right|^2 \int_a^b r^2 \left|Q_\ell i_\ell(\alpha_2 r) + R_\ell k_\ell(\alpha_2 r)\right|^2 dr \ , \qquad (4.74)$$

where

$$Q_\ell = -[\beta_1 i_\ell'(\alpha_1 a)k_\ell(\alpha_2 a) - \beta_2 i_\ell(\alpha_1 a)k_\ell'(\alpha_2 a)] \qquad (4.75)$$

$$R_\ell = \beta_1 i_\ell'(\alpha_1 a)i_\ell(\alpha_2 a) - \beta_2 i_\ell(\alpha_1 a)i_\ell'(\alpha_2 a) \ . \qquad (4.76)$$

In the event that $\sigma_1 = 0$, then $D_\ell$ in Eq. (4.74) is given by Eq. (4.52) and $\alpha_1$ and $\beta_1$ must be replaced with $\alpha_0$ in the above expressions for $Q_\ell$ and $R_\ell$.

## The Electromagnetic Forces on the Conductors

Due to the inherent axial symmetry of this problem, the net electromagnetic force exerted on the conductors will be in the z-direction. Therefore, in Eq. (2.62) we express the curl of the vector potential in cylindrical coordinates and obtain

$$F_k = -\frac{1}{2} j\omega\sigma_k \iiint A^{(k)}(r,\theta) \frac{\partial}{\partial z} [A^{(k)}(r,\theta)]^* \, dr \ , \qquad (4.77)$$

since $A_\phi$ in spherical coordinates is identically equal to $A_\theta$ in cylindrical coordinates. If we make use of the familiar formula of partial differentiation,

$$\frac{\partial}{\partial x_i} = \sum_j \frac{\partial x_j}{\partial x_i} \frac{\partial}{\partial x_j} , \tag{4.78}$$

then we may write

$$\frac{\partial}{\partial z} = \cos\theta \frac{\partial}{\partial r} - \frac{\sin\theta}{r} \frac{\partial}{\partial \theta} . \tag{4.79}$$

Substitution of Eq. (4.79) in Eq. (4.77) and integrating over $\phi$ yield

$$F_k = -j\pi\omega\sigma_k \left[ \iint A^{(k)}(r,\theta) \frac{\partial}{\partial r} [A^{(k)}(r,\theta)]^* r^2 \sin\theta \cos\theta \, d\theta \, dr \right.$$
$$\left. - \iint A^{(k)}(r,\theta) \frac{\partial}{\partial \theta} [A^{(k)}(r,\theta)]^* r \sin^2\theta \, d\theta \, dr \right] . \tag{4.80}$$

If we wish to know the time-averaged force exerted on the conductor in region I, then k = 1 and the first integral in Eq. (4.80) becomes

$$\frac{4\mu^2 n^2 I^2}{(\theta_2-\theta_1)^2 (r_2^2-r_1^2)^2} \int_0^a \int_0^\pi \sum_{\ell=1}^\infty \sum_{\ell'=1}^\infty \left[ \frac{2\ell+1}{2\ell(\ell+1)D_\ell} \frac{2\ell'+1}{2\ell'(\ell'+1)D_{\ell'}^*} \right.$$
$$P_\ell^1(\theta_1,\theta_2) \, P_{\ell'}^1(\theta_1,\theta_2) \, P_\ell^1(\cos\theta) \, P_{\ell'}^1(\cos\theta) \, \frac{\pi^2 \alpha_1^*}{4a^4 b^4} \left| \frac{\beta_2}{\alpha_2^2 \alpha_0^3} \right|^2$$
$$\left. k_\ell(r_1,r_2) k_{\ell'}(r_1,r_2)^* i_\ell(\alpha_0 r) i_\ell'(\alpha_1 r)^* \right] r^2 \sin\theta \cos\theta \, d\theta \, dr . \tag{4.81}$$

Use of the recurrence relation

$$xP_\ell^1(x) = \frac{\ell}{2\ell + 1} P_{\ell+1}^1(x) + \frac{\ell + 1}{2\ell + 1} P_{\ell-1}^1(x) \ , \tag{4.82}$$

integration over $\theta$ and summation over $\ell'$ give

$$\frac{4\mu^2 n^2 I^2}{(\theta_2-\theta_1)^2(r_2^2-r_1^2)^2} \sum_{\ell=1}^{\infty} \frac{\pi^2 \alpha_1^*}{4a^4b^4D_\ell} \left|\frac{\beta_2}{\alpha_2^2\alpha_0^2}\right|^2 P_\ell^1(\theta_1,\theta_2)k_\ell(r_1,r_2)$$

$$\left[\frac{1}{2(\ell+ 1)D_{\ell+1}^*} P_{\ell+1}^1(\theta_1,\theta_2)k_{\ell+1}(r_1,r_2)^* \int_0^a r^2 i_\ell(\alpha_1 r) i'_{\ell+1}(\alpha_1 r)^* \, dr\right.$$

$$\left. + \frac{1}{2\ell D_{\ell-1}^*} P_{\ell-1}^1(\theta_1,\theta_2)k_{\ell-1}(r_1,r_2)^* \int_0^a r^2 i_\ell(\alpha_1 r) i'_{\ell-1}(\alpha_1 r)^* dr\right]. \tag{4.83}$$

On the other hand, the second integral in Eq. (4.80) is

$$\frac{4\mu^2 n^2 I^2}{(\theta_2-\theta_1)^2(r_2^2-r_1^2)^2} \int_0^a\int_0^\pi \sum_{\ell=1}^{\infty} \sum_{\ell=1}^{\infty} \left[\frac{2\ell + 1}{2\ell(\ell + 1)D_\ell} \frac{2\ell' + 1}{2\ell'(\ell' + 1)D_{\ell'}^*} P_\ell^1(\theta_1,\theta_2)\right.$$

$$P_{\ell'}^1(\theta_1,\theta_2) \, P_\ell^1(\cos\theta) \, \frac{\partial}{\partial\theta} P_{\ell'}^1(\cos\theta) \, \frac{\pi^2}{4a^4b^4}\left|\frac{\beta_2}{\alpha_2^2\alpha_0^3}\right|^2 k_\ell(r_1,r_2)$$

$$\left. k_\ell(r_1,r_2)^* i_{\ell'}(\alpha_1 r) i_{\ell'}(\alpha_1 r)^*\right] r \sin^2\theta \, d\theta \, dr \ . \tag{4.84}$$

In this case, use of the recurrence relation

$$(1 - x^2) \frac{d}{dx} P_\ell^1(x) = \frac{(\ell + 1)^2}{2\ell + 1} P_{\ell-1}^1(x) - \frac{\ell^2}{2\ell + 1} P_{\ell+1}^1(x) \ , \tag{4.85}$$

integration over $\theta$ and summation over $\ell'$ yield

$$- \frac{4\mu^2 n^2 I^2}{(\theta_2-\theta_1)^2(r_2^2-r_1^2)^2} \sum_{\ell=1}^{\infty} \frac{\pi^2}{4a^4b^4}\left|\frac{\beta_2}{\alpha_2^2\alpha_0^3}\right|^2 P_\ell^1(\theta_1,\theta_2)k_\ell(r_1,r_2)$$

$$\left[\frac{\ell + 2}{2(\ell + 1)D_{\ell+1}^*} P_{\ell+1}^1(\theta_1,\theta_2)k_{\ell+1}(r_1,r_2)^* \int_0^a r\, i_\ell(\alpha_1 r) i_{\ell+1}(\alpha_1 r)^* dr\right.$$

$$+ \frac{\ell - 1}{2\ell D_{\ell-1}^*} P_{\ell-1}^1(\theta_1,\theta_2)k_{\ell-1}(\alpha_1 r)^* \int_0^a r\, i_\ell(\alpha_1 r)$$

$$\left. i_{\ell-1}(\alpha_1 r)^* dr\right] . \qquad (4.86)$$

Substitution of Eqs. (4.83) and (4.86) in Eq. (4.80) and use of the recurrence relations

$$\frac{d}{dz} i_{\ell+1}(z) = i_\ell(z) - \frac{\ell + 2}{z} i_{\ell+1}(z) \qquad (4.87)$$

and

$$\frac{d}{dz} i_{\ell-1}(z) = i_\ell(z) + \frac{\ell - 1}{z} i_{\ell-1}(z) \qquad (4.88)$$

give, upon simplification,

$$F_1 = - \frac{j\pi\omega\mu^2\sigma n^2 I^2}{(\theta_2-\theta_1)^2(r_2^2-r_1^2)^2} \frac{\pi^2}{2a^4b^4}\left|\frac{\beta_2}{\alpha_2^2\alpha_0^3}\right|^2 \sum_{\ell=1}^{\infty} \frac{\alpha_1^*}{D_\ell} P_\ell^1(\theta_1,\theta_2)k_\ell(r_1,r_2)$$

$$\left[\frac{1}{(\ell + 1)D_{\ell+1}^*} P_{\ell+1}^1(\theta_1,\theta_2)k_{\ell+1}(r_1,r_2)^* + \frac{1}{\ell D_{\ell-1}^*} P_{\ell-1}^1(\theta_1,\theta_2)\right.$$

$$\left. k_{\ell-1}(r_1,r_2)^*\right] \int_0^a r^2[x_\ell^2(r) + y_\ell^2(r)]\, dr \qquad (4.89)$$

for the net electromagnetic force on the conductor in region I. Of course, the actual physical force is obtained by taking the real part of this expression.

A similar expression may be derived for the conductor in region II; however, the degree of its complexity precludes its being given here. Instead, we shall proceed to the subject of defects in the conductors.

Defects in the Conductors

From Eq. (2.67), the change in the impedance due to the presence of a current defect in a conductor is

$$\Delta Z = \frac{3}{2} v\alpha_{33}\sigma_k\omega^2 \left(\frac{A_k}{I}\right)^2 , \tag{4.90}$$

where the subscript k denotes the region in which the defect is located. If we assume the conductor in region II to possess a defect located at a point $(r,\theta)$, then substitution of Eq. (4.45) in Eq. (4.90) yields

$$\Delta Z = \frac{3v\alpha_{33}\sigma_2\omega^2\mu^2 n^2}{2(\theta_2-\theta_1)^2(r_2^2-r_1^2)^2} \sum_{\ell=1}^{\infty} \frac{2\ell+1}{2\ell(\ell+1)D_\ell} P_\ell^1(\theta_1,\theta_2)\, P_\ell^1(\cos\theta)\, \frac{k_\ell(r_1,r_2)}{{}_0^3b^2}$$

$$\Big( -[\beta_1 i_\ell'(\alpha_1 a)k_\ell(\alpha_2 a) - \beta_2 i_\ell(\alpha_1 a)k_\ell'(\alpha_2 a)] +$$

$$[\beta_1 i_\ell'(\alpha_1 a)i_\ell(\alpha_2 a) - \beta_2 i_\ell(\alpha_1 a)i_\ell'(\alpha_2 a)]k_\ell(\alpha_2 a)\Big)^2 \tag{4.91}$$

for the change in the coil impedance. For the case in which $\sigma_1 = 0$ and $\mu_1 = 1$, i.e., a single spherical shell of thickness (b-a), Eq. (4.91) reduces to

$$\Delta Z = \frac{3v\alpha_{33}\sigma_2\omega^2\mu^2 n^2}{2(\theta_2-\theta_1)^2(r_2^2-r_1^2)^2} \sum_{\ell=1}^{\infty} \frac{2\ell+1}{2\ell(\ell+1)D} P_\ell^1(\theta_1,\theta_2)\, P_\ell^1(\cos\theta)\, \frac{k_\ell(r_1,r_2)}{\alpha_0^3 b^2}$$

$$\Big\{ -[\alpha_0 i_\ell'(\alpha_0 a) k_\ell(\alpha_2 a) - \beta_2 i_\ell(\alpha_0 a) k_\ell'(\alpha_2 a)] i_\ell(\alpha_2 r) +$$

$$[\alpha_0 i_\ell'(\alpha_0 a) i_\ell(\alpha_2 a) - \beta_2 i_\ell(\alpha_0 a) i_\ell'(\alpha_2 a)] k_\ell(\alpha_2 r) \Big\}^2 \qquad (4.92)$$

with $D_\ell$ given by Eq. (4.52). Again similar expressions may be derived for current defects located in region I.

In this and the preceding sections, a number of special cases have been given for each quantity of interest. Those cases which have not been treated are easily obtained by using the methods presented in each section. Therefore, we shall proceed to another general case, namely, an infinitely long straight wire between parallel, conducting plates.

# CHAPTER V

## LONG WIRE BETWEEN CONDUCTING PLATES

### The Vector Potential of a Delta Function Current

An infinitely long delta function current flowing in the z-direction between parallel, conducting plates is shown in cross section in Fig. 8. Due to the inherent rectangular symmetry, we choose to use rectangular coordinates in solving the problem. Since the current flows only in the z-direction, the x and y components of the vector potential vanish. Examination of the first section of the second chapter shows us that the vector potential must thus be a solution of Eq. (2.2) with $n = z$. Replacing $\partial/\partial t$ with $j\omega$ and writing the Laplace operator in rectangular coordinates, this equation becomes

$$\frac{\partial^2 A}{\partial x^2} + \frac{\partial^2 A}{\partial y^2} - j\omega\mu_i\sigma_i A + \omega^2\mu_i\varepsilon_i A + \mu I\delta(x-x_0)\delta(y-y_0) = 0 \ , \tag{5.1}$$

where A is the z component of the vector potential and where the last term on the left vanishes except at $x = x_0$, $y = y_0$.

Equation (5.1) may be solved by the method of separation of variables which yields the general solution

$$A(x,y) = \int_0^\infty [a(\alpha)e^{-\alpha_i y} + b(\alpha)e^{\alpha_i y}][\cos\alpha(x-x_0) + c(\alpha)\sin\alpha(x-x_0)]\, d\alpha \tag{5.2}$$

where

ORNL-DWG 69-497

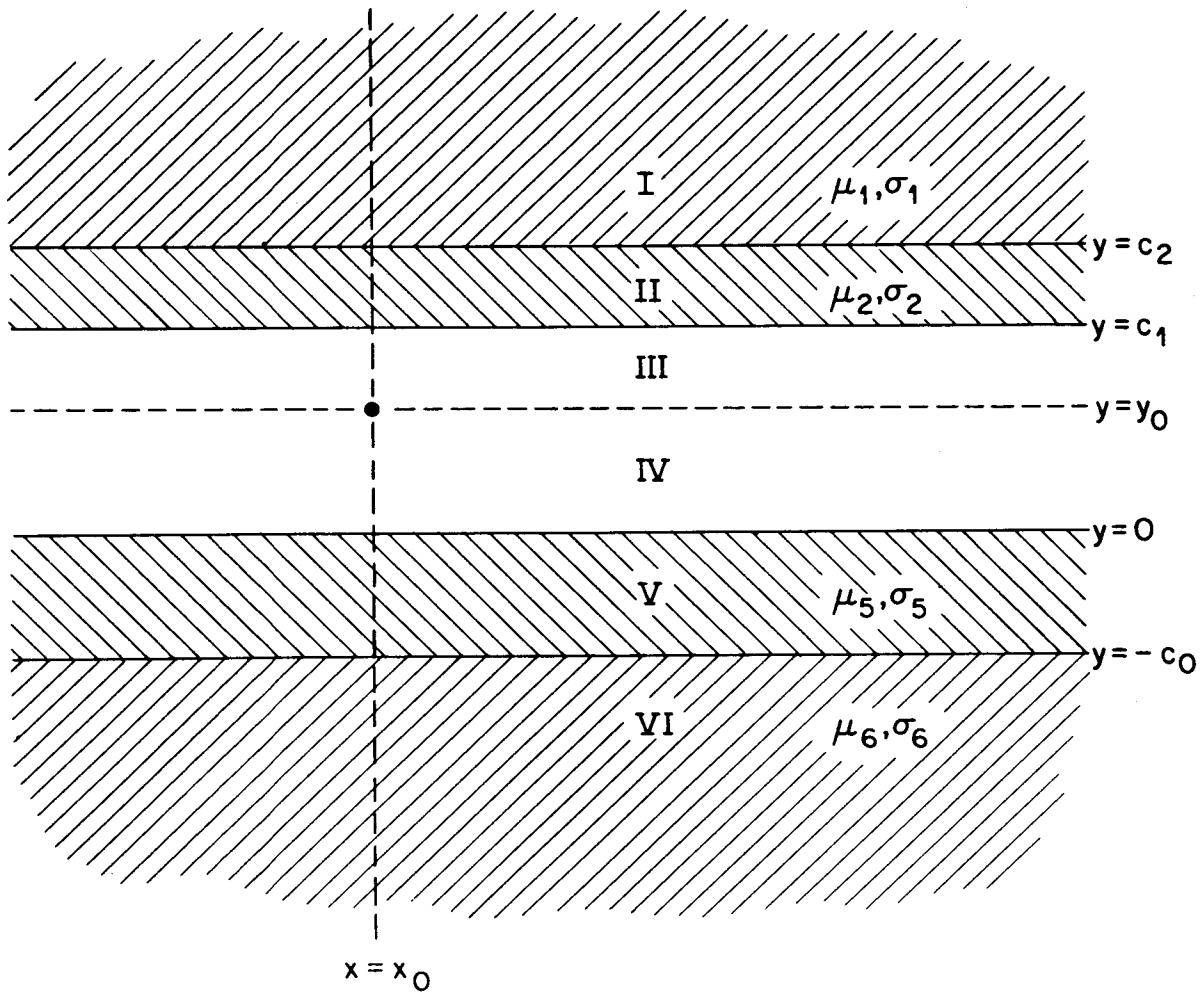


Figure 8. Cross section of a delta function current between conducting plates.

$$\alpha_i \doteq \{\alpha^2 - \omega^2\mu_i\varepsilon_i + j\omega\mu_i\sigma_i\}^{1/2} \tag{5.3}$$

and the subscripts refer to the region of interest. We shall require the vector potential to remain finite at $z = \pm\infty$ so that $a(\alpha) = 0$ in region VI and $b(\alpha) = 0$ in region I. Furthermore, the fact that the vector potential will be symmetric with respect to $x - x_0$ requires $c(\alpha) = 0$ in all regions. Thus the solutions for the various regions are

$$A^{(1)}(x,y) = \int_0^\infty a_1(\alpha)e^{-\alpha_1 y}\cos\alpha(z-x_0)d\alpha \ , \tag{5.4}$$

$$A^{(2)}(x,y) = \int_0^\infty [a_2(\alpha)e^{-\alpha_2 y} + b_2(\alpha)e^{\alpha_2 y}]\cos\alpha(x-x_0)d\alpha \ , \tag{5.5}$$

$$A^{(3)}(x,y) = \int_0^\infty [a_3(\alpha)e^{-\alpha_0 y} + b_3(\alpha)e^{\alpha_0 y}]\cos\alpha(x-x_0)d\alpha \ , \tag{5.6}$$

$$A^{(4)}(x,y) = \int_0^\infty [a_4(\alpha)e^{-\alpha_0 y} + b_4(\alpha)e^{\alpha_0 y}]\cos\alpha(x-x_0)d\alpha \ , \tag{5.7}$$

$$A^{(5)}(x,y) = \int_0^\infty [a_5(\alpha)e^{-\alpha_5 y} + b_5(\alpha)e^{\alpha_5 y}]\cos\alpha(x-x_0)d\alpha \ , \tag{5.8}$$

$$A^{(6)}(x,y) = \int_0^\infty b_6(\alpha)e^{\alpha_6 y}\cos\alpha(x-x_0)d\alpha \ , \tag{5.9}$$

where the superscripts refer to the specific region and

$$\alpha_0 = \{\alpha^2 - \omega^2/c^2\}^{1/2} \ , \tag{5.10}$$

since regions III and IV are taken to be air.

Now the boundary conditions are

$$A^{(1)}(x,c_2) = A^{(2)}(x,c_2) \ , \tag{5.11}$$

$$\frac{1}{\mu_1}\frac{\partial A^{(1)}}{\partial y}\Big]_{y=c_2} = \frac{1}{\mu_2}\frac{\partial A^{(2)}}{\partial y}\Big]_{y=c_2} \ , \tag{5.12}$$

$$A^{(2)}(x,c_1) = A^{(3)}(x,c_1) \ , \tag{5.13}$$

$$\frac{1}{\mu_2}\frac{\partial A^{(2)}}{\partial y}\Big]_{y=c_1} = \frac{\partial A^{(3)}}{\partial y}\Big]_{y=c_1} \ , \tag{5.14}$$

$$A^{(3)}(x,y_0) = A^{(4)}(x,y_0) \ , \tag{5.15}$$

$$\frac{\partial A^{(3)}}{\partial y}\Big]_{y=y_0} = \frac{\partial A^{(4)}}{\partial y}\Big]_{y=y_0} - \mu I\delta(x-x_0) \tag{5.16}$$

$$A^{(4)}(x,0) = A^{(5)}(x,0) \ , \tag{5.18}$$

$$\frac{\partial A^{(4)}}{\partial y}\Big]_{y=0} = \frac{1}{\mu_5}\frac{\partial A^{(5)}}{\partial y}\Big]_{y=0} \ , \tag{5.19}$$

$$A^{(5)}(x-c_2) = A^{(6)}(x-c_0) \ , \tag{5.20}$$

$$\frac{1}{\mu_5}\frac{\partial A^{(5)}}{\partial y}\Big]_{y=-c_0} = \frac{1}{\mu_6}\frac{\partial A^{(6)}}{\partial y}\Big]_{y=-c_0} \ . \tag{5.21}$$

Substitution of Eqs. (5.4)-(5.9) in Eqs. (5.11)-(5.21) yields

$$\int_0^\infty a_1(\alpha)e^{-\alpha_1 c_2} \cos\alpha(x-x_0)\, d\alpha =$$

$$\int_0^\infty [a_2(\alpha)e^{-\alpha_2 c_2} + b_2(\alpha)e^{\alpha_2 c_2}] \cos\alpha(x-x_0)\, d\alpha \,, \tag{5.22}$$

$$\int_0^\infty \beta_1 a_1(\alpha)e^{-\alpha_1 c_2} \cos\alpha(x-x_0)\, d\alpha =$$

$$\int_0^\infty \beta_2[a_2(\alpha)e^{-\alpha_2 c_2} - b_2(\alpha)e^{\alpha_2 c_2}] \cos\alpha(x-x_0)\, d\alpha \,, \tag{5.23}$$

$$\int_0^\infty [a_2(\alpha)e^{-\alpha_2 c_1} + b_2(\alpha)e^{\alpha_2 c_1}] \cos\alpha(x-x_0)\, d\alpha =$$

$$\int_0^\infty [a_3(\alpha)e^{-\alpha_0 c_1} + b_3(\alpha)e^{\alpha_0 c_1}] \cos\alpha(x-x_0)\, d\alpha \,, \tag{5.24}$$

$$\int_0^\infty \beta_2[a_2(\alpha)e^{-\alpha_2 c_1} - b_2(\alpha)e^{\alpha_2 c_1}] \cos\alpha(x-x_0)\, d\alpha =$$

$$\int_0^\infty \alpha_0[a_3(\alpha)e^{-\alpha_0 c_1} - b_3(\alpha)e^{\alpha_0 c_1}] \cos\alpha(x-x_0)\, d\alpha \,, \tag{5.25}$$

$$\int_0^\infty [a_3(\alpha)e^{-\alpha_0 y_0} + b_3(\alpha)e^{\alpha_0 y_0}] \cos\alpha(x-x_0)\, d\alpha =$$

$$\int_0^\infty [a_4(\alpha)e^{-\alpha_0 y_0} + b_4(\alpha)e^{\alpha_0 y_0}] \cos\alpha(x-x_0)\, d\alpha \,, \tag{5.26}$$

$$\int_0^\infty \alpha_0[a_3(\alpha)e^{-\alpha_0 y_0} - b_3(\alpha)e^{\alpha_0 y_0}] \cos\alpha(x-x_0)\, d\alpha =$$

$$\int_0^\infty \alpha_0[a_4(\alpha)e^{-\alpha_0 y_0} - b_4(\alpha)e^{\alpha_0 y_0}] \cos\alpha(x-x_0)\, d\alpha + \mu I\delta(x-x_0) \,, \tag{5.27}$$

$$\int_0^\infty [a_4(\alpha) + b_4(\alpha)] \cos\alpha(x-x_0)\, d\alpha = \int_0^\infty [a_5(\alpha) + b_5(\alpha)] \cos\alpha(x-x_0)\, d\alpha \,, \tag{5.28}$$

$$\int_0^\infty \alpha_0[a_4(\alpha) - b_4(\alpha)] \cos\alpha(x-x_0)\, d\alpha = \int_0^\infty \beta_5[a_5(\alpha) - b_5(\alpha)] \cos\alpha(x-x_0)\, d\alpha \,, \tag{5.29}$$

$$\int_0^\infty [a_5(\alpha)e^{\alpha_5 c_0} + b_5(\alpha)e^{-\alpha_5 c_0}] \cos\alpha(x-x_0)\, d\alpha = \int_0^\infty b_6(\alpha)e^{-\alpha_6 c_0} \cos\alpha(x-x_0)\, d\alpha \,, \tag{5.30}$$

$$-\int_0^\infty \beta_5[a_5(\alpha)e^{\alpha_5 c_0} - b_5(\alpha)e^{-\alpha_5 c_0}] \cos\alpha(x-x_0)\, d\alpha =$$

$$\int_0^\infty \beta_6 b_6(\alpha)e^{-\alpha_0 c_0} \cos\alpha(x-x_0)\, d\alpha \,, \tag{5.31}$$

where $\beta_i = \alpha_i/\mu_i$. Multiplying Eqs. (5.22)-(5.31) by $\cos\alpha'(x-x_0)$ $d(x-x_0)$, integrating from $-\infty$ to $+\infty$ and using the fact that

$$f(\alpha') = \frac{1}{\pi}\int_0^\infty f(\alpha)\left[\int_{-\infty}^{\infty} \cos\alpha'(x-x_0) \cos\alpha(x-x_0) d(x-x_0)\right] d\alpha \tag{5.32}$$

gives, after dropping the primes,

$$a_1(\alpha)e^{-\alpha_1 c_2} = a_2(\alpha)e^{-\alpha_2 c_2} + b_2(\alpha)e^{\alpha_2 c_2} \,, \tag{5.33}$$

$$\beta_1 a_1(\alpha)e^{-\alpha_1 c_2} = \beta_2[a_2(\alpha)e^{-\alpha_2 c_2} - b_2(\alpha)e^{\alpha_2 c_2}] \,, \tag{5.34}$$

$$a_2(\alpha)e^{-\alpha_2 c_1} + b_2(\alpha)e^{\alpha_2 c_1} = a_3(\alpha)e^{-\alpha_0 c_1} + b_3(\alpha)e^{\alpha_0 c_1} \,, \tag{5.35}$$

$$\beta_2[a_2(\alpha)e^{-\alpha_2 c_1} - b_2(\alpha)e^{\alpha_2 c_1}] = \alpha_0[a_3(\alpha)e^{-\alpha_0 c_1} - b_3(\alpha)e^{\alpha_0 c_1}] \ , \quad (5.36$$

$$a_3(\alpha)e^{-\alpha_0 y_0} + b_3(\alpha)e^{\alpha_0 y_0} = a_4(\alpha)e^{-\alpha_0 y_0} + b_4(\alpha)e^{\alpha_0 y_0} \ , \quad (5.37)$$

$$a_3(\alpha)e^{-\alpha_0 y_0} - b_3(\alpha)e^{\alpha_0 y_0} = a_4(\alpha)e^{-\alpha_0 y_0} - b_4(\alpha)e^{\alpha_0 y_0} + \frac{\mu I}{\pi\alpha_0} \ , \quad (5.38)$$

$$a_4(\alpha) + b_4(\alpha) = a_5(\alpha) + b_5(\alpha) \ , \quad (5.39)$$

$$\alpha_0[a_4(\alpha) - b_4(\alpha)] = \beta_5[a_5(\alpha) - b_5(\alpha)] \ , \quad (5.40)$$

$$a_5(\alpha)\ e^{\alpha_5 c_0} + b_5(\alpha)e^{-\alpha_5 c_0} = b_6(\alpha)e^{-\alpha_6 c_0} \ , \quad (5.41)$$

$$\beta_5[a_5(\alpha)e^{\alpha_5 c_0} - b_5(\alpha)e^{-\alpha_5 c_0}] = -\beta_6 b_6(\alpha)e^{-\alpha_6 c_0} \ . \quad (5.42)$$

Equations (5.33)-(5.42) constitute a set of ten linear, inhomogeneous equations in ten unknowns. The methods of solving equations of this type are well known and thus will not be given here. It is sufficient to state that the solutions to Eqs. (5.33)-(5.42) are

$$a_1 = \frac{\mu I}{2\pi\alpha_0} \frac{e^{(\alpha_1-\alpha_2)c_2}}{\beta_1+\beta_2} e^{\alpha_2 c_1} [(\beta_2+\alpha_0)e^{-\alpha_0 c_1} Q_1 - (\beta_2-\alpha_0)e^{\alpha_0 c_1} Q_0]$$

$$\frac{S_1 e^{-\alpha_0 y_0} + S_0 e^{\alpha_0 y_0}}{Q_1 S_0 + Q_0 S_1} \ , \quad (5.43)$$

$$a_2 = \frac{\mu I}{4\pi\alpha_0\beta_2} e^{\alpha_2 c_1}[(\beta_2+\alpha_0)e^{-\alpha_0 c_1}Q_1 - (\beta_2-\alpha_0)e^{\alpha_0 c_1}Q_0]$$

$$\frac{S_1 e^{-\alpha_0 y_0} + S_0 e^{\alpha_0 y_0}}{Q_1 S_0 + Q_0 S_1}, \tag{5.44}$$

$$b_2 = \frac{\mu I}{4\pi\alpha_0\beta_2} e^{-\alpha_2 c_1}[(\beta_2-\alpha_0)e^{-\alpha_0 c_1}Q_1 - (\beta_2+\alpha_0)e^{\alpha_0 c_1}Q_0]$$

$$\frac{S_1 e^{-\alpha_0 y_0} + S_0 e^{\alpha_0 y_0}}{Q_1 S_0 + Q_0 S_1}, \tag{5.45}$$

$$a_3 = \frac{\mu I}{2\pi\alpha_0} \frac{Q_1(S_1 e^{-\alpha_0 y_0} + S_0 e^{\alpha_0 y_0})}{Q_1 S_0 + Q_0 S_1}, \tag{5.46}$$

$$b_3 = -\frac{\mu I}{2\pi\alpha_0} \frac{Q_0(S_1 e^{-\alpha_0 y_0} + S_0 e^{\alpha_0 y_0})}{Q_1 S_0 + Q_0 S_1}, \tag{5.47}$$

$$a_4 = \frac{\mu I}{2\pi\alpha_0} \frac{S_1(Q_1 e^{-\alpha_0 y_0} - Q_0 e^{\alpha_0 y_0})}{Q_1 S_0 + Q_0 S_1}, \tag{5.48}$$

$$b_4 = \frac{\mu I}{2\pi\alpha_0} \frac{S_0(Q_1 e^{-\alpha_0 y_0} - Q_0 e^{\alpha_0 y_0})}{Q_1 S_0 + Q_0 S_1}, \tag{5.49}$$

$$a_5 = \frac{\mu I}{4\pi\alpha_0\beta_5} [(\alpha_0+\beta_5)S_1 - (\alpha_0-\beta_5)S_0] \frac{Q_1 e^{-\alpha_0 y_0} - Q_0 e^{\alpha_0 y_0}}{Q_1 S_0 + Q_0 S_1}, \tag{5.50}$$

$$b_5 = \frac{\mu I}{4\pi\alpha_0\beta_5} [(\alpha_0+\beta_5)S_0 - (\alpha_0-\beta_5)S_1] \frac{Q_1 e^{-\alpha_0 y_0} - Q_0 e^{\alpha_0 y_0}}{Q_1 S_0 + Q_0 S_1}, \tag{5.51}$$

$$b_6 = \frac{\mu I}{2\pi\alpha_0} \frac{e^{-(\alpha_5-\alpha_6)c_0}}{\beta_5+\beta_6} [(\alpha_0+\beta_5)S_0 - (\alpha_0-\beta_5)S_1] \frac{Q_1 e^{-\alpha_0 y_0} - Q_0 e^{\alpha_0 y_0}}{Q_1 S_0 + Q_0 S_1} , \tag{5.52}$$

where

$$Q_1 = [(\beta_1-\beta_2)(\beta_2-\alpha_0) + (\beta_1+\beta_2)(\beta_2+\alpha_0)e^{2\alpha_2(c_2-c_1)}]e^{-2\alpha_2 c_1} , \tag{5.53}$$

$$Q_0 = [(\beta_1-\beta_2)(\beta_2+\alpha_0) + (\beta_1+\beta_2)(\beta_2-\alpha_0)e^{2\alpha(c_2-c_1)}] , \tag{5.54}$$

$$S_0 = (\alpha_0-\beta_5)(\beta_5-\beta_6) + (\alpha_0+\beta_5)(\beta_5+\beta_6)e^{2\alpha_5 c_0} , \tag{5.55}$$

$$S_1 = (\alpha_0+\beta_5)(\beta_5-\beta_6) + (\alpha_0-\beta_5)(\beta_5+\beta_6)e^{2\alpha_5 c_0} . \tag{5.56}$$

## The Vector Potential of a Finite Current

The solutions given by Eqs. (5.4)-(5.9) with the constants given by Eqs. (5.43)-(5.52) give the vector potential in the various regions for a delta function current. The problem of a finite size wire carrying a current I may now be solved by use of Eq. (2.14). It is very important to note, however, that Eq. (2.14) does not present the complete picture, for in the finite size wire case there exists a region which was absent in the delta function current case, i.e., the layer of space, parallel to the conductors, that contains the wire. Following the format established in the preceding chapters, this region shall be denoted by III-IV and, as usual, will require special attention.

At a point (x,y), in this region, the vector potential for a wire of rectangular cross section is given by

$$A^{(3,4)}(x,y) = \frac{1}{w(\ell_2-\ell_1}\int_{-w/2}^{w/2}\left[\int_{\ell_1}^{y}\frac{A^{(3)}(x,y)}{i_0}\,dy_0 + \int_{y}^{\ell_2}\frac{A^{(4)}(x,y)}{i_0}\,dy_0\right]dx_0 \,, \tag{5.57}$$

where w is the width of the wire and $\ell_2 - \ell_1$ its height. The explicit dependence of $A^{(3)}(x,y)$ and $A^{(4)}(x,y)$ on $x_0$ and $y_0$ is exhibited by Eq. (5.46)-(5.49). Substitution of Eqs. (5.6) and (5.7) with Eqs. (5.46)-(5.49) in Eq. (5.57) yields

$$A^{(3,4)}(x,y) = \frac{\mu I}{2\pi w(\ell_2-\ell_1)}\int_0^{\infty}\frac{1}{\alpha_0}\int_{-w/2}^{w/2}\cos\alpha(x-x_0)dx_0$$

$$\left[\int_{\ell_1}^{y}\frac{S_1e^{-\alpha_0 y_0}+S_0e^{\alpha_0 y_0}}{Q_1S_0+Q_0S_1}(Q_1e^{-\alpha_0 y}-Q_0e^{\alpha_0 y})dy_0\right.$$

$$\left.+\int_{y}^{\ell_2}\frac{Q_1e^{-\alpha_0 y_0}-Q_0e^{\alpha_0 y_0}}{Q_1S_0+Q_0S_1}(S_1e^{-\alpha_0 y}+S_0e^{\alpha_0 y})dy_0\right]d\alpha \,, \tag{5.58}$$

where the order of integration has been reversed. Performing the $x_0$ and $y_0$ integrations and simplifying give

$$A^{(3,4)}(x,y) = \frac{\mu I}{\pi w(\ {}_2 - \ {}_1)}\int_0^{\infty}\frac{1}{\alpha\alpha_0^2}\sin\alpha\frac{w}{2}\cos\alpha x$$

$$\left[2-\frac{(Q_0e^{\alpha_0\ell_2}+Q_1e^{-\alpha_0\ell_2})(S_0e^{\alpha_0 y}+S_1e^{-\alpha_0 y})}{Q_1S_0+Q_0S_1}\right.$$

$$+ \frac{(S_0 e^{\alpha_0 \ell_1} - S_1 e^{-\alpha_0 \ell_1})(Q_0 e^{\alpha_0 y} - Q_1 e^{-\alpha_0 y})}{Q_1 S_0 + Q_0 S_1} \, d\alpha \, . \tag{5.59}$$

To obtain the vector potential in the other regions due to a current, I, flowing in a straight wire of cross sectional area $w(\ell_2 - \ell_1)$, we substitute Eqs. (5.43)-(5.52) in Eqs. (5.4)-(5.10) and the results in Eq. (2.14):

$$A^{(1)}(x,y) = \frac{\mu I}{\pi w(\ell_2 - \ell_1)} \int_0^\infty \frac{1}{\alpha \alpha_0^2} \sin\alpha\frac{w}{2} \cos\alpha x$$

$$\frac{S_0(e^{\alpha_0 \ell_2} - e^{\alpha_0 \ell_1}) - S_1(e^{-\alpha_0 \ell_2} - e^{-\alpha_0 \ell_1})}{Q_1 S_0 + Q_0 S_1} \frac{e^{-\alpha_2(c_2 - c_1)}}{\beta_1 + \beta_2}$$

$$[(\beta_2 + \alpha_0) e^{-\alpha_0 c_1} Q_1 - (\beta_2 - \alpha_0) e^{\alpha_0 c_1} Q_0] e^{-\alpha_1 (y - c_2)} \, d\alpha \, , \tag{5.60}$$

$$A^{(2)}(x,y) = \frac{\mu I}{\pi w(\ell_2 - \ell_1)} \int_0^\infty \frac{1}{2\alpha \alpha_0^2 \beta_2} \sin\alpha\frac{w}{2} \cos\alpha x$$

$$\frac{S_0(e^{\alpha_0 \ell_2} - e^{\alpha_0 \ell_1}) - S_1(e^{-\alpha_0 \ell_2} - e^{-\alpha_0 \ell_1})}{Q_1 S_0 + Q_0 S_1}$$

$$[(\beta_2 + \alpha_0) e^{-\alpha_0 c_1} Q_1 - (\beta_2 - \alpha_0) e^{\alpha_0 c_1} Q_0] \, e^{-\alpha_2 (y - c_1)}$$

$$+ [(\beta_2-\alpha_0)e^{-\alpha_0 c_1}Q_1 - (\beta_2+\alpha_0)e^{\alpha_0 c_1}Q_0]e^{\alpha_2(y-c_1)} \quad d\alpha \ , \tag{5.61}$$

$$A^{(2)}(x,y) = \frac{\mu I}{\pi w(\ell_2-\ell_1)} \int_0^\infty \frac{1}{\alpha\alpha_0^2} \sin\alpha\frac{w}{2} \cos\alpha x$$

$$\frac{S_0(e^{\alpha_0\ell_2} - e^{\alpha_0\ell_1}) - S_1(e^{-\alpha_0\ell_2} - e^{-\alpha_0\ell_1})}{Q_1S_0 + Q_0S_1}$$

$$(Q_1e^{-\alpha_0 y} - Q_0e^{\alpha_0 y}) \ d\alpha \ , \tag{5.62}$$

$$A^{(4)}(x,y) = -\frac{\mu I}{\pi w(\ell_2-\ell_1)} \int_0^\infty \frac{1}{\alpha\alpha_0^2} \sin\alpha\frac{w}{2} \cos\alpha x$$

$$\frac{Q_1(e^{-\alpha_0\ell_2} - e^{-\alpha_0\ell_1}) + Q_0(e^{\alpha_0\ell_2} - e^{\alpha_0\ell_1})}{Q_1S_0 + Q_0S_1}$$

$$(S_1e^{-\alpha_0 y} + S_0e^{\alpha_0 y}) \ d\alpha \ , \tag{5.63}$$

$$A^{(5)}(x,y) = \frac{\mu I}{\pi w(\ell_2-\ell_1)} \int_0^\infty \frac{1}{2\alpha\alpha_0^2\beta_2} \sin\alpha\frac{w}{2} \cos\alpha x$$

$$\frac{Q_1(e^{-\alpha_0\ell_2} - e^{-\alpha_0\ell_1}) + Q_0(e^{\alpha_0\ell_2} - e^{\alpha_0\ell_1})}{Q_1S_0 + Q_0S_1}$$

$$[(\alpha_0+\beta_5)S_1 - (\alpha_0-\beta_5)S_0] \ e^{-\alpha_5 y}$$

$$- [(\alpha_0-\beta_5)S_1 - (\alpha_0+\beta_5)S_0]\, e^{\alpha_5 y}\, d\alpha\ , \tag{5.64}$$

$$A^{(6)}(x,y) = -\frac{\mu I}{\pi w(\ell_2-\ell_1)} \int_0^\infty \frac{1}{\alpha\alpha_0^2} \sin\alpha\frac{w}{2} \cos\alpha x$$

$$\frac{Q_1(e^{-\alpha_0\ell_2} - e^{-\alpha_0\ell_1}) + Q_0(e^{\alpha_0\ell_2} - e^{\alpha_0\ell_1})}{Q_1S_0 + Q_1S_1} \frac{e^{-\alpha_5 c_0}}{\beta_5+\beta_6}$$

$$[(\alpha_0+\beta_5)S_0 - (\alpha_0-\beta_5)S_1]\, e^{\alpha_6(y+c_0)}\, d\alpha\ . \tag{5.65}$$

With Eqs. (5.60)-(5.65) any number of physically observable phenomena may be calculated. Before attempting these calculations, however, we shall consider some limiting cases.

First let us suppose that the relative permeability of each region is unity and at the same time the conductivity of each region vanishes. In this case, if we assume $\varepsilon_i = \varepsilon_0$ for all i, then $Q_0$ and $S_1$ also vanish while $Q_1$ and $S_0$ reduce to

$$Q_1 = 4\alpha_0^2 e^{2\alpha_0 c_2 - 4\alpha_0 c_1} \tag{5.66}$$

$$S_0 = 4\alpha_0^2 e^{2\alpha_0 c_0}\ , \tag{5.67}$$

so that

$$A^{(1)}(x,y) = A^{(2)}(x,y) = A^{(2)}(x,y)$$

$$= \frac{\mu I}{\pi w(\ell_2-\ell_1)} \int_0^\infty \frac{1}{\alpha\alpha_0^2} \sin\alpha\frac{w}{2} \cos\alpha x (e^{\alpha_0\ell_2} - e^{\alpha_0\ell_1}) e^{-\alpha_0 y}\, d\alpha\ , \tag{5.68}$$

$$A^{(3,4)}(x,y) = \frac{\mu I}{\pi w(\ell_2-\ell_1)} \int_0^\infty \frac{1}{\alpha\alpha_0^2} \sin\alpha\frac{w}{2} \cos\alpha x$$

$$\left(2 - [e^{-\alpha_0(\ell_2-y)} + e^{-\alpha_0(y-\ell_1)}]\right) d\alpha \ , \tag{5.69}$$

$$A^{(4)}(x,y) = A^{(5)}(x,y) = A^{(6)}(x,y)$$

$$= \frac{\mu I}{\pi w(\ell_2-\ell_1)} \int_0^\infty \frac{1}{\alpha\alpha_0^2} \sin\alpha\frac{w}{2} \cos\alpha x \ (e^{-\alpha_0\ell_1} - e^{-\alpha_0\ell_2})e^{\alpha_0 y} \ d\alpha \ , \tag{5.70}$$

for an infinitely long straight wire of rectangular cross section.

Another case of interest is that for which $\mu_1 = \mu_2 = 1$ and $\sigma_1 = \sigma_2 = 0$, i.e., the case of a straight wire above a two-layered conductor. In this case $Q_0$ vanishes, $S_0$ and $S_1$ are given by Eqs. (5.55) and (5.56), respectively, and $Q_1$ reduces to the value given in Eq. (5.66); thus

$$A^{(1)}(x,y) = A^{(2)}(x,y) + A^{(3)}(x,y) =$$

$$\frac{\mu I}{\pi w(\ell_2-\ell_1)} \int_0^\infty \frac{1}{\alpha\alpha_0^2} \sin\alpha\frac{w}{2} \cos\alpha x \ [(e^{\alpha_0\ell_2} - e^{\alpha_0\ell_1}) -$$

$$\frac{S_1}{S_0}(e^{-\alpha_0\ell_2} - e^{-\alpha_0\ell_1})] \ e^{-\alpha_0 y} \ d\alpha \ , \tag{5.71}$$

$$A^{(3,4)}(x,y) = \frac{\mu I}{\pi w(\ell_2-\ell_1)} \int_0^\infty \frac{1}{\alpha\alpha_0^2} \sin\alpha\frac{w}{2} \cos\alpha x$$

$$\left(2 - [e^{-\alpha_0(\ell_2-y)} + e^{-\alpha_0(y-\ell_1)}] - \frac{S_1}{S_0} [e^{-\alpha_0\ell_2} - e^{-\alpha_0\ell_1}[e^{-\alpha_0 y}\right) d\alpha \ ,$$

(5.72)

$$A^{(4)}(x,y) = -\frac{\mu I}{\pi w(\ell_2-\ell_1)} \int_0^\infty \frac{1}{\alpha\alpha_0^2} \sin\alpha\frac{w}{2} \cos\alpha x \, (e^{-\alpha_0\ell_2} - e^{-\alpha_0\ell_1})$$

$$(e^{\alpha_0 y} + \frac{S_1}{S_0} e^{-\alpha_0 y}) \, d\alpha \, , \tag{5.73}$$

$$A^{(5)}(x,y) = -\frac{\mu I}{\pi w(\ell_2-\ell_1)} \int_0^\infty \frac{1}{2\alpha\alpha_0^2\beta_5} \sin\alpha\frac{w}{2} \cos\alpha x \, (e^{-\alpha_0\ell_2} - e^{-\alpha_0\ell_1})$$

$$[(\alpha_0+\beta_5) - (\alpha_0-\beta_5) \frac{S_1}{S_0}] \, e^{\alpha_5 y} -$$

$$[(\alpha_0-\beta_5) - (\alpha_0+\beta_5) \frac{S_1}{S_0}] \, e^{-\alpha_5 y} \, d\alpha \, , \tag{5.74}$$

$$A^{(6)}(x,y) = -\frac{\mu I}{\pi w(\ell_2-\ell_1)} \int_0^\infty \frac{1}{\alpha\alpha_0^2} \sin\alpha\frac{w}{2} \cos\alpha x \, (e^{-\alpha_0\ell_2} - e^{-\alpha_0\ell_1})$$

$$\frac{e^{-\alpha_5 c_0}}{\beta_5+\beta_6} [(\alpha_0+\beta_5) - (\alpha_0-\beta_5) \frac{S_1}{S_0}] \, e^{\alpha_6(y+c_0)} \, d\alpha \, , \tag{5.75}$$

where we have again assumed $\varepsilon_i = \varepsilon_0$ for all i.

There are still other interesting cases, but we shall turn now to the calculation of some physically observable phenomena.

## The Voltage Induced by a Finite Current

Now let us suppose that another wire of cross sectional area $w'(\ell_2' - \ell_1')$ is placed between the plates parallel to the first one. One can then ask what is the voltage induced per unit length in the second wire. The answer, of course, is easily obtained by use of Eq. (2.31) with $n' = 1$. For convenience, we shall measure the center-to-center

separation, d, of the two wires along the x-axis; thus if the second wire lies entirely within region III-IV, then substitution of Eq. (5.59) in Eq. (2.31) yields

$$\frac{dV}{ds} = \frac{j\omega\mu I}{\pi w'(\ell_2'-\ell_1')w(\ell_2-\ell_1)} \int_0^\infty \frac{2\cos\alpha d}{\alpha^2\alpha_0^2} \sin\alpha\frac{w}{2} \sin\alpha\frac{w'}{2} \Bigg[ 2(\ell_2'-\ell_1')$$

$$- \frac{(Q_0 e^{\alpha_0\ell_2} + Q_1 e^{-\alpha_0\ell_2})[S_0(e^{\alpha_0\ell_2'} - e^{\alpha_0\ell_1'}) - S_1(e^{-\alpha_0\ell_2'} - e^{-\alpha_0\ell_1'})]}{\alpha_0(Q_1S_0 + Q_0S_1)}$$

$$+ \frac{(S_0 e^{\alpha_0\ell_1} - S_1 e^{-\alpha_0\ell_1})[Q_0(e^{\alpha_0\ell_2'} - e^{\alpha_0\ell_1'}) + Q_1(e^{-\alpha_0\ell_2'} - e^{-\alpha_0\ell_1'})]}{\alpha_0(Q_1S_0 + Q_0S_1)} \Bigg] d\alpha \tag{5.76}$$

for the voltage induced per unit length of wire. Obviously, Eq. (5.76) holds only if the wire is in region III-IV.

If instead we place the second wire so that part of it lies in region III-IV and the remainder in region III, Eq. (2.31) becomes

$$\frac{dV}{ds} = \frac{j\omega}{\pi w'(\ell_2'-\ell_1')} \int_{d-w'/2}^{d+w'/2} \left[ \int_{\ell_1'}^{\ell_2} A^{(3,4)}(x,y)dy + \int_{\ell_2}^{\ell_2'} A^{(3)}(x,y)dy \right] dx \ , \tag{5.77}$$

while if we let $\mu_6 = 1$ and $\sigma_6 = 0$ and place the wire in region VI the voltage induced per unit length is

$$\frac{dV}{ds} = -\frac{j\omega\mu I}{\pi w'(\ell_2'-\ell_1')w(\ell_2-\ell_1)} \int_0^\infty \frac{2\cos\alpha d}{\alpha^2\alpha_0^3} \sin\alpha\frac{w}{2} \sin\alpha\frac{w'}{2}$$

$$\frac{Q_1(e^{-\alpha_0\ell_2} - e^{-\alpha_0\ell_1}) + Q_0(e^{\alpha_0\ell_2} - e^{\alpha_0\ell_1})}{Q_1S_0 + Q_0S_1} \frac{e^{-\alpha_5 c_0}}{\alpha_0+\beta_5}$$

$$[(\alpha_0+\beta_5)S_1 - (\alpha_0-\beta_5)S_0]e^{\alpha_0(y+c_0)}\, d\alpha \ , \tag{5.78}$$

where $Q_1$ and $Q_0$ are given by Eqs. (5.53) and (5.54), respectively,

$$S_0 = (\alpha_0-\beta_5)(\beta_5-\alpha_0) + (\alpha_0+\beta_5)(\beta_5+\alpha_0)e^{2\alpha_5 c_0} \tag{5.79}$$

$$S_1 = (\alpha_0+\beta_5)(\beta_5-\alpha_0) + (\alpha_0-\beta_5)(\beta_5+\alpha_0)e^{2\alpha_5 c_0} \ . \tag{5.80}$$

Letting the two upper conductors recede to infinity and at the same time letting d approach zero will yield the special case of two parallel wires, separated by a distance $(\ell_2 + \ell_1 - \ell_2' - \ell_1')/2$, with a conductor of thickness $c_0$ between them. In this case, Eq. (5.78) becomes

$$\frac{dV}{ds} = -\frac{j\omega\mu I}{\pi w'(\ell_2'-\ell_1')w(\ell_2-\ell_1)} \int_0^\infty \frac{4}{\alpha^2\alpha_0^3} \sin\alpha\frac{w}{2} \sin\alpha\frac{w'}{2} (e^{-\alpha_0\ell_2} - e^{-\alpha_0\ell_1})$$

$$(e^{-\alpha_0\ell_1'} - e^{-\alpha_0\ell_2'}) \frac{\beta_5 e^{(\alpha_0+\alpha_5)c_0}}{(\alpha_0-\beta_5)(\beta_5-\alpha_0) + (\alpha_0+\beta_5)(\beta_5+\alpha_0)e^{2\alpha_5 c_0}}\, d\alpha \ . \tag{5.81}$$

In each of the cases given by Eqs. (5.76)-(5.81), the mutual inductance per unit length is easily obtained by using Eq. (2.38) from which we see that division of these equations by $j\omega I$ is all that is necessary.

## The Impedance of a Finite Cross Section Wire

Another quantity of interest for this case is the impedance per unit length of a wire. To effect the calculation of this quantity, we must first determine the self induced voltage per unit length. To this end, we substitute Eq. (5.59) in Eq. (2.31), or, equivalently, let the dimensions of the two wires in Eq. (5.75) become the same and take $d = 0$. Choosing the latter alternative and rearranging terms give

$$\frac{dV}{ds} = \frac{4j\omega\mu I}{\pi w^2(\ell_2-\ell_1)^2} \int_0^\infty \frac{1}{\alpha^2\alpha_0^2} \sin^2\alpha\frac{w}{2} \quad (\ell_2-\ell_1)$$

$$+ \frac{(Q_0 e^{\alpha_0\ell_2} + Q_1 e^{-\alpha_0\ell_2})(S_0 e^{\alpha_0\ell_1} - S_1 e^{-\alpha_0\ell_1}) - (Q_1S_0 - Q_0S_1)}{\alpha_0(Q_1S_0 + Q_0S_1)}$$

$$\left. - \frac{Q_0S_0(e^{2\alpha_0\ell_2} + e^{2\alpha_0\ell_1}) - Q_1S_1(e^{-2\alpha_0\ell_2} + e^{-2\alpha_0\ell_1})}{2\alpha_0(Q_1S_0 + Q_0S_1)} \right] d\alpha \ , \qquad (5.82)$$

for the impedance per unit length. For the case in which Eqs. (5.71)-(5.75) hold, i.e., a straight wire above a two-layered conductor, we have

$$\frac{dZ}{ds} = \frac{4j\omega\mu}{\pi w^2(\ell_2-\ell_1)^2} \int_0^\infty \frac{1}{\alpha^2\alpha_0^2} \sin^2\alpha\frac{w}{2} \left[(\ell_2-\ell_1) + \frac{1}{\alpha_0}\right.$$

$$\left.[e^{-\alpha_0(\ell_2-\ell_1)} - 1] + \frac{S_1}{2\alpha_0 S_0}(e^{-\alpha_0\ell_2} - e^{-\alpha_0\ell_1})^2\right] d\alpha \ , \qquad (5.84)$$

where $S_0$ and $S_1$ are given by Eqs. (5.55) and (5.56), respectively.

Since it is conventional to normalize the impedance of a coil in the presence of conductors by dividing by the magnitude of the impedance of the same coil in air, we shall do the same for a straight wire. Thus we write here the impedance per unit length of the wire in air:

$$\frac{dZ}{ds} = \frac{4j\omega\mu}{\pi w^2(\ell_2-\ell_1)^2} \int_0^\infty \frac{1}{\alpha^2\alpha_0^2} \sin^2\alpha\frac{w}{2} \left[(\ell_2-\ell_1) + \frac{1}{\alpha_0}[e^{-\alpha_0(\ell_2-\ell_1)} - 1]\right] d\alpha \ . \qquad (5.85)$$

<u>The Power Dissipated by the Eddy Currents</u>

We turn now to the calculation of the power loss per unit length due to the eddy currents which are induced in the conductors. Since the results are even more complicated than those seen thus far, we shall compute the power loss per unit length for only one conductor. Substitution of Eq. (5.64) in Eq. (2.56) gives

$$\frac{d\bar{P}_5}{ds} = \frac{1}{2}\sigma_5\omega^2 \int_{-c_0}^{0}\left[\int_{-\infty}^{\infty} \frac{\mu I}{\pi w(\ell_2-\ell_1)} \int_0^\infty \frac{1}{2\alpha\alpha_0^2\beta_5} \sin\alpha\frac{w}{2} \cos\alpha x\right.$$

$$\frac{Q_1(e^{-\alpha_0\ell_2} - e^{-\alpha_0\ell_1}) + Q_0(e^{\alpha_0\ell_2} - e^{\alpha_0\ell_1})}{Q_1S_0 + Q_0S_1}$$

$$([(\alpha_0+\beta_5)S_1 - (\alpha_0-\beta_5)S_0]e^{-\alpha_5 y} - [(\alpha_0-\beta_5)S_1 - (\alpha_0+\beta_5)S_0]\, e^{\alpha_5 y})\, d\alpha\Bigg]$$

$$\Bigg[\frac{\mu I}{\pi w(\ell_2-\ell_1)} \int_0^\infty \frac{1}{2\alpha\alpha_0\beta_5'} \sin\alpha'\frac{w}{2} \cos\alpha' x$$

$$\frac{Q_1'(e^{-\alpha_0'\ell_2} - e^{-\alpha_0'\ell_1}) + Q_0'(e^{\alpha_0'\ell_2} - e^{\alpha_0'\ell_1})}{Q_1'S_0' + Q_0'S_1'} ([(\alpha_0'+\beta_5')S_1' - (\alpha_0'-\beta_5')S_0']$$

$$e^{-\alpha_5' y} - [(\alpha_0'-\beta_5')S_1' - (\alpha_0'+\beta_5')S_0']e^{\alpha_5' y})\, d\alpha'\Bigg]\, dz\, dy\ , \qquad (5.86)$$

where the primes indicate that $\alpha = \alpha'$ in the expressions for the constants. Reversing the order of integration, using the Fourier integral theorem and then integrating over $\alpha'$ yields

$$\frac{d\bar{P}_5}{ds} = \frac{\sigma_5\omega^2\mu^2 I^2}{2\pi w^2(\ell_2-\ell_1)^2} \int_0^\infty \frac{1}{\alpha^2\alpha_0^4} \sin^2\alpha\frac{w}{2}$$

$$\int_{-c_0}^{0} \Bigg|\frac{Q_1(e^{-\alpha_0\ell_2} - e^{-\alpha_0\ell_1}) + Q_0(e^{\alpha_0\ell_2} - e^{\alpha_0\ell_1})}{2(Q_1S_0 + Q_0S_1)\beta_5} \Bigg([(\alpha_0+\beta_5)S_1 - (\alpha_0-\beta_5)S_0]e^{-\alpha_5 y}$$

$$- [(\alpha_0-\beta_5)S_1 - (\alpha_0+\beta_5)S_0]e^{\alpha_5 y}\Bigg)\Bigg|^2\, dy\, d\alpha\ ,$$

while the y integration gives

$$\frac{d\bar{P}_5}{ds} = \frac{\sigma_5\omega^2\mu^2 I^2}{2\pi w^2(\ell_2-\ell_1)^2}\int_0^\infty \frac{1}{\alpha^2\alpha_0^4}\sin^2\alpha\frac{w}{2}\left|\frac{Q_1(e^{-\alpha_0\ell_2} - e^{-\alpha_0\ell_1}) + Q_0(e^{\alpha_0\ell_2} - e^{\alpha_0\ell_1})}{2(Q_1S_0 + Q_0S_1)\beta_5}\right|^2$$

$$\left[\left|(\alpha_0+\beta_5)S_1 - (\alpha_0-\beta_5)S_0\right|^2 \frac{e^{2x_5c_0}-1}{2x_5} + \left|(\alpha_0-\beta_5)S_1 - (\alpha_0+\beta_5)S_0\right|^2\right.$$

$$\frac{1 - e^{-2x_5c_0}}{2x_5} - j[(\alpha_0+\beta_5)S_1 - (\alpha_0-\beta_5)S_0][(\alpha_0-\beta_5)S_1 -$$

$$(\alpha_0+\beta_5)S_0]^* \frac{1 - e^{+2jy_5c_0}}{2y_5} - j[(\alpha_0-\beta_5)S_1 - (\alpha_0+\beta_5)S_0]$$

$$\left.[(\alpha_0+\beta_5)S_1 - (\alpha_0-\beta_5)S_0]^* \frac{e^{-2jy_5c_0}-1}{2y_5}\right] d\alpha \ , \qquad (5.88)$$

where $x_5$ and $y_5$ are the real and imaginary parts of $\alpha_5$, respectively. For the special case of a single conductor of infinite thickness, Eq. (5.88) reduces to

$$\frac{d\bar{P}_5}{ds} = \frac{\sigma_5\omega^2\mu^2 I^2}{\pi w^2(\ell_2-\ell_1)^2}\int_0^\infty \frac{1}{\alpha^2\alpha_0^2}\sin^2\alpha\frac{w}{2}\,\frac{(e^{-\alpha_0\ell_2} - e^{-\alpha_0\ell_1})^2}{x_5|\alpha_0+\beta_5|^2}\,d\alpha \ , \qquad (5.89)$$

which is of somewhat greater practical value.

Expressions similar to Eq. (5.88) may be derived for the power loss per unit length due to the eddy currents in the other conductors, but we shall consider next the electromagnetic forces on the conductors.

The Electromagnetic Forces on the Conductors

We shall now make use of Eq. (2.64) to calculate the electromagnetic force on the conductor in region V. Taking the curl of $A^{(5)}(x,y)$ yields

$$\frac{dF_5}{ds} = -\frac{1}{2} j\omega\sigma_5 \iint A^{(5)}(x,y) \frac{\partial}{\partial y} [A^{(5)}(x,y)]^* \, dx \, dy \, , \tag{5.90}$$

which, due to the axial symmetry, is in the y-direction. Substitution of Eq. (5.64) in Eq. (5.90) and integration over x give

$$\frac{dF_5}{ds} = -\frac{j\omega\sigma_5\mu^2 I^2}{2\pi w^2(\ell_2-\ell_1)^2} \int_0^\infty \frac{1}{\alpha^3\alpha_0^4} \sin^2\alpha\frac{w}{2} \left| \frac{Q_1(e^{-\alpha_0\ell_2} - e^{-\alpha_0\ell_1}) + Q_0(e^{\alpha_0\ell_2} - e^{\alpha_0\ell_1})}{2(Q_1S_0 + Q_0S_1)\beta_5} \right|^2$$

$$\int_{-c_0}^{0} \left( [(\alpha_0+\beta_5)S_1 - (\alpha_0-\beta_5)S_0]e^{-\alpha_5 y} - [(\alpha_0-\beta_5)S_1 - (\alpha_0+\beta_5)S_0]e^{\alpha_5 y} \right)$$

$$\left( - \alpha_5[(\alpha_0+\beta_5)S_1 - (\alpha_0-\beta_5)S_0]e^{-\alpha_5 y} - \alpha_5[(\alpha_0-\beta_5)S_1 - \right.$$

$$\left. (\alpha_0+\beta_5)S_0]e^{\alpha_5 y} \right)^* dy \, d\alpha \, , \tag{5.91}$$

from which

$$\frac{dF_5}{ds} = -\frac{j\omega\sigma_5\mu^2 I^2}{2\pi w^2(\ell_2-\ell_1)^2} \int_0^\infty \frac{1}{\alpha^2\alpha_0^4} \sin^2\alpha\frac{w}{2} \left| \frac{Q_1(e^{-\alpha_0\ell_2} - e^{-\alpha_0\ell_1}) + Q_0(e^{\alpha_0\ell_2} - e^{\alpha_0\ell_1})}{2(Q_1S_0 + Q_0S_1)\beta_5} \right|^2$$

$$\left( - \alpha_5^* \, |(\alpha_0+\beta_5)S_1 - (\alpha_0-\beta_5)S_0|^2 \, \frac{e^{2x_5c_0} - 1}{2x_5} \right.$$

$$+ \alpha_5^* \left|(\alpha_0-\beta_5)S_1 - (\alpha_0+\beta_5)S_0\right|^2 \frac{1 - e^{-2x_5c_0}}{2x_5} -$$

$$j\alpha_5^* \left[(\alpha_0+\beta_5)S_1 - (\alpha_0-\beta_5)S_0\right]\left[(\alpha_0-\beta_5)S_1 - (\alpha_0+\beta_5)S_0\right]^* \frac{e^{2jy_5c_0} - 1}{2y_5}$$

$$- j\alpha_5^* \left[(\alpha_0-\beta_5)S_1 - (\alpha_0+\beta_5)S_0\right]\left[(\alpha_0+\beta_5)S_1 - (\alpha_0-\beta_5)S_0\right]^* \frac{1 - e^{-2jy_5c_0}}{2y_5}\Bigg) d\alpha, \tag{5.92}$$

where as before $x_5$ and $y_5$ are the real and imaginary parts of $\alpha_5$, respectively. For the case of a single conductor of thickness $c_0$, Eq. (5.92) reduces to

$$\frac{dF_5}{ds} = - \frac{j\omega\sigma_5\mu^2 I^2}{2\pi w^2(\ell_2-\ell_1)^2} \int_0^\infty \frac{2}{\alpha^2\alpha_0^2} \sin^2\alpha\frac{w}{2} \frac{(e^{-\alpha_0\ell_2} - e^{-\alpha_0\ell_1})^2}{|S_0|^2} \alpha_5^*$$

$$\Bigg(\left[|\alpha_0+\beta_5|^2 e^{2x_5c_0} - |\beta_5-\alpha_0|^2\right] \frac{e^{2x_5c_0} - 1}{x_5} - j\left[(\beta_5-\alpha_0)(\beta_5+\alpha_0)^* e^{-2y_5c_0} - (\beta_5+\alpha_0)(\beta_5-\alpha_0)^*\right] \frac{e^{2\alpha_5c_0} - e^{2x_5c_0}}{y_5}\Bigg) d\alpha , \tag{5.93}$$

where $S_0$ is given by Eq. (5.79). Letting $c_0$ approach infinity yields the semi-infinite plane case:

$$\frac{dF_5}{ds} = - \frac{j\omega\sigma_5\mu^2 I^2}{2\pi w^2(\ell_2-\ell_1)^2} \int_0^\infty \frac{2\mu_5^2}{\alpha^2\alpha_0^2} \sin^2\alpha\frac{w}{2} \frac{(e^{-\alpha_0\ell_2} - e^{-\alpha_0\ell_1})^2}{x_5[(\alpha_0\mu_5+x_5)^2 + y_5^2]} (x_5-jy_5)\, d\alpha , \tag{5.94}$$

where $\mu_5$ is the relative permeability of the conductor. From this and the two preceding expressions, we see that the time-averaged force per unit length is a complex quantity so that for purposes of comparison with experiment only the real part of these expressions need be considered.

Again similar expressions may be derived for the electromagnetic forces on the other conductors, but we shall omit them for the sake of brevity.

In this and the preceding sections, a number of special cases have been given for each quantity of interest. Obviously, a great many other special cases still remain; however, these remaining special cases are easily obtained by using the methods presented in each section. Hence, we shall omit further discussion.

# CHAPTER VI

## CONCLUSIONS

The general theory for the vector potential produced by a sinusoidal current of finite cross section has been developed and applied to several different current and conductor geometries: a coil between a number of conducting plates; a coil encircling two, concentric, spherical shells; and a straight wire between a number of conducting plates. Linear, isotropic and homogeneous media have been assumed throughout each analysis. In each case the Green's function solution was first obtained, and the principle of superposition then used to effect the desired result. A number of physically observable phenomena, such as the induced voltage, the power loss due to the presence of the conductors, the time-averaged electromagnetic force on the conductors, et al., were subsequently calculated from the vector potential.

Each case is sufficiently general to allow the solution of a considerable number of difficult electromagnetic induction problems since special cases not contained in this dissertation may be obtained simply by using the methods persented herein. Furthermore, each of the expressions for the physically observable phenomena is in terms of an infinite integral or sum which may be readily evaluated on a computer. In addition, several special cases contained in this dissertation have been experimentally verified (19). Among these are the impedance of a

coil above a single, conducting plate of both finite and infinite thicknesses, the electromagnetic force due to a coil above a conducting plate of infinite thickness, and the induced voltage for two coils separated by a conducting plate. In all cases, the agreement between calculated and observed values is within the limits of experimental error. Preliminary investigations of other special cases tend to support the validity of the corresponding theoretical expressions.

Several obvious extensions of the present work are worthy of mention. The first and most obvious is the extension of the experimental observations to include each of the cases presented here. Secondly, the effects of uniform motion of the conductors on the impedance, the mutual inductance, the electromagnetic force, et al. deserve investigation. Since the methods used in this dissertation are not restricted to coils or wires having cross sections of a particular shape, another possible extension is to the case of a coil of rectangular cross section encircling two, concentric, spherical shells. Similarly, an analysis of a straight wire of circular cross section between several conducting plates might prove fruitful. Yet another possible extension is to current densities which vary over the cross section of the coil or wire, in which case one does not factor the current density from the integrands of the integrals involved. The effect of non-sinusoidal currents, particularly pulses, might also be fruitfully investigated. However, these and many other extensions will be left to future work.

# LIST OF REFERENCES

## LIST OF REFERENCES


1. Hughes, D. E., Phil. Mag. 8 (5), 50 (1879).

2. Förster, Friedrich, Z. Metallk. 43, 163-171 (1952).

3. Förster, Friedrich, and Kurt Stambke, Z. Metallk. 45 (4), 166-179 (1954).

4. Förster, Friedrich, Z. Metallk. 45 (4), 197-199 (1954).

5. Waidelich, D. L., and C. J. Renken, Proc. Natl. Electron. Conf. 12, 188-196 (1956).

6. Hochschild, R., "Electromagnetic Methods of Testing Metals," Progress in Nondestructive Testing, Vol. 1 (Macmillan Company, New York, 1959).

7. Libby, H. L., Broadband Electromagnetic Testing Methods, Hanford Atomic Products Operation, HW-59614 (1959).

8. Russell, T. J., V. E. Schuster, and D. L. Waidelich, J. Electron. Control 13, 232-237 (1962).

9. Vein, P. R., J. Electron. Control 13, 471-494 (1962).

10. Atwood, K. W., and H. L. Libby, Diffusion of Eddy Currents, Hanford Atomic Products Operations, HW-79844 (1963)

11. Dodd, C. V., and W. E. Deeds, "Eddy Current Impedance Calculated by a Relaxation Method," pp. 300-314 in Proceedings of the Symposium on Physics and Nondestructive Testing, (Southwest Research Institute, San Antonio, Texas, 1963).

12. Cheng, David S. S., "The Reflected Impedance of a Circular Coil in the Proximity of a Semi-Infinite Medium," (Ph.D. Dissertation, University of Missouri, 1964).

13. Burrows, Michael Leonard, A Theory of Eddy Current Flaw Detection (University Microfilms, Inc., Ann Arbor, Michigan, 1964).

14. Dodd, C. V., A Solution to Electromagnetic Induction Problems, Oak Ridge National Laboratory, ORNL-TM-1185 (1965), and M.S. Thesis, The University of Tennessee, 1965.

15. Philippe, A., Non-destructive Control of Non-ferromagnetic Metal Sheet by Means of Eddy Currents. Calculation of the Complex Impedance of a Coil in the Presence of a Metal Plate under Pure Alternating Conditions, European Atomic Energy Community, EUR-3483 (1967).

16. Onoe, M., An Analysis of a Finite Solenoid Near a Conductor, Institute of Industrial Science, the University of Tokyo, 17 (25), 1-36 (1967).

17. Dodd, C. V., Solutions to Electromagnetic Induction Problems, Oak Ridge National Laboratory, ORNL-TM-1842 (1967) and Ph.D. Dissertation, The University of Tennessee, 1967.

18. Dodd, C. V., and W. E. Deeds, J. Appl. Phys. 39, 2829-2838 (1968).

19. Dodd, C. V., W. E. Deeds and J. W. Luquire, Phys. and Non-Destructive Testing, 1, 1-62 (1969).

20. Dodd, C. V., W. E. Deeds, J. W. Luquire and W. G. Spoeri, Some Eddy-Current Problems and Their Integral Solutions, Oak Ridge National Laboratory, ORNL-4384 (1969).

21. Luquire, J. W., C. V. Dodd, W. E. Deeds and W. G. Spoeri, Computer Programs for Some Eddy Current Problems, Oak Ridge National Laboratory, ORNL-TM-2501 (1969).

# APPENDIX

## APPENDIX

## LIST OF SYMBOLS

Symbols used in this work are given in the first column, while the quantities they represent are given in the second column. The corresponding meter-kilogram-second (MKS) unit, if any, if given in the third column, and the dimensions in terms of mass (M), length (L), time (T) and electric charge (Q) are given in the last column.

| Symbol | Name | MKS Unit | Dimensions |
|---|---|---|---|
| A | vector potential | $\frac{\text{weber}}{\text{meter}}$ | $\frac{ML}{TQ}$ |
| B | magnetic induction | $\frac{\text{weber}}{\text{meter}^2}$ | $\frac{M}{TQ}$ |
| E | electric intensity | $\frac{\text{volt}}{\text{meter}}$ | $\frac{ML}{QT^2}$ |
| F | force | newton | $\frac{ML}{T^2}$ |
| I | applied current | ampere | $\frac{Q}{T}$ |
| $i_0$ | applied current density | $\frac{\text{ampere}}{\text{meter}^2}$ | $\frac{Q}{TL^2}$ |
| J | current density | $\frac{\text{ampere}}{\text{meter}^2}$ | $\frac{Q}{TL^2}$ |
| j | square root of negative one | | |
| L | inductance | henry | $\frac{ML^2}{Q^2}$ |
| M | mutual inductance | henry | $\frac{ML^2}{Q^2}$ |

| Symbol | Name | MKS Unit | Dimensions |
|---|---|---|---|
| $N$ | turns per unit area | $\frac{1}{\text{meter}^2}$ | $\frac{1}{L^2}$ |
| $n$ | number of turns | | |
| $P$ | power | watt | $\frac{ML^2}{T^3}$ |
| $t$ | time | second | $T$ |
| $V$ | voltage | volt | $\frac{ML^2}{QT^2}$ |
| $v$ | volume of defect | $\text{meter}^3$ | $L^3$ |
| $Z$ | impedance | ohm | $\frac{ML^2}{TQ^2}$ |
| $Z_N$ | normalized impedance | | |
| $\overset{\rightleftarrows}{\alpha}$ | current scattering matrix | | |
| $\overset{\rightleftarrows}{\beta}$ | magnetic scattering matrix | | |
| $\varepsilon$ | dielectric constant | $\frac{\text{farad}}{\text{meter}}$ | $\frac{T^2Q^2}{ML^3}$ |
| $\mu$ | permeability | $\frac{\text{henry}}{\text{meter}}$ | $\frac{ML}{Q^2}$ |
| $\sigma$ | conductivity | $\frac{\text{mho}}{\text{meter}}$ | $\frac{TQ^2}{ML^3}$ |
| $\omega$ | angular frequency | $\frac{1}{\text{second}}$ | $\frac{1}{T}$ |

## INTERNAL DISTRIBUTION

1–3. Central Research Library
4–5. ORNL Y-12 Technical Library
Document Reference Section
6–25. Laboratory Records Department
26. Laboratory Records, ORNL-RC
27. ORNL Patent Office
28. G. M. Adamson, Jr.
29. J. C. Ashley
30. G. E. Boyd
31. W. D. Brown
32. G. W. Clark
33. J. E. Cunningham
34–43. C. V. Dodd
44. J. H Frye, Jr.
45. W. Fulkerson
46. W. O. Harms
47–49. M. R. Hill
50. C. C. Lu
51–75. J. W. Luquire, III
76. H. G. MacPherson
77. D. L. Mason (Y-12)
78. R. W. McClung
79. W. L. Moore
80. H. C. Schweinler
81. W. A. Simpson
82. H. M. Smith
83. K. E. Spear
84. W. G. Spoeri
85. D. A. Sundberg
86. V.R.R. Uppuluri

## EXTERNAL DISTRIBUTION

87. S. Aveyard, AERE-Harwell, Didcot, Berkshire, England
88. R. L. Brown, Jr., Battelle-Northwest
89. C. C. Cheng, Northwestern College, Orange City, Iowa (Physics Dept.)
90. D. F. Cope, RDT, SSR, AEC, Oak Ridge National Laboratory
91–100. W. E. Deeds, the University of Tennessee
101. Robert C. Grubinskas, Department of the Army, Army Materials and Mechanics Research Center, Watertown, Mass. 02172
102. Donald L. Green, Battelle-Northwest
103. E. G. Harris, the University of Tennessee, Physics Department
104. H. L. Libby, Battelle-Northwest
105. M. C. McIlwain, R-QUAL-ARA, G. C. Marshall Space Flight Center, Marshall Center, Ala. 35812
106. H. T. Mathews, the University of Tennessee, Mathematics Department
107. C. J. Renken, Argonne National Laboratory
108. Roy S. Sharpe, AERE-Harwell, Didcot, Berkshire, England
109–110. J. M. Simmons, AEC, Washington
111–112. E. E. Stansbury, the University of Tennessee
113. D. K. Stevens, AEC, Washington
114. D. L. Waidelich, Department of Electrical Engineering, University of Missouri, Columbia, Mo. 65201
115. Laboratory and University Division, AEC, Oak Ridge Operations
116–130. Division of Technical Information Extension