LOCKHEED MARTIN ENERGY RESEARCH LIBRARIES
3 4456 0513773 1

CENTRAL RESEARCH LIBRARY
DOCUMENT COLLECTION

OAK RIDGE NATIONAL LABORATORY
operated by
UNION CARBIDE CORPORATION
NUCLEAR DIVISION
for the
U.S. ATOMIC ENERGY COMMISSION

ORNL-TM-2676
82

COPY NO. -

DATE - August 5, 1969

OPERATING MANUAL FOR THE 2-MW BULK SHIELDING REACTOR

R. A. Costner, Jr.
W. H. Culbert
S. S. Hurt, III
W. H. Tabor

OAK RIDGE NATIONAL LABORATORY
CENTRAL RESEARCH LIBRARY
DOCUMENT COLLECTION
LIBRARY LOAN COPY
DO NOT TRANSFER TO ANOTHER PERSON
If you wish someone else to see this document, send in name with document and the library will arrange a loan.

NOTICE This document contains information of a preliminary nature and was prepared primarily for internal use at the Oak Ridge National Laboratory. It is subject to revision or correction and therefore does not represent a final report.

LEGAL NOTICE

This report was prepared as an account of Government sponsored work. Neither the United States, nor the Commission, nor any person acting on behalf of the Commission:

A. Makes any warranty or representation, expressed or implied, with respect to the accuracy, completeness, or usefulness of the information contained in this report, or that the use of any information, apparatus, method, or process disclosed in this report may not infringe privately owned rights; or

B. Assumes any liabilities with respect to the use of, or for damages resulting from the use of any information, apparatus, method, or process disclosed in this report.

As used in the above, "person acting on behalf of the Commission" includes any employee or contractor of the Commission, or employee of such contractor, to the extent that such employee or contractor of the Commission, or employee of such contractor prepares, disseminates, or provides access to, any information pursuant to his employment or contract with the Commission, or his employment with such contractor.

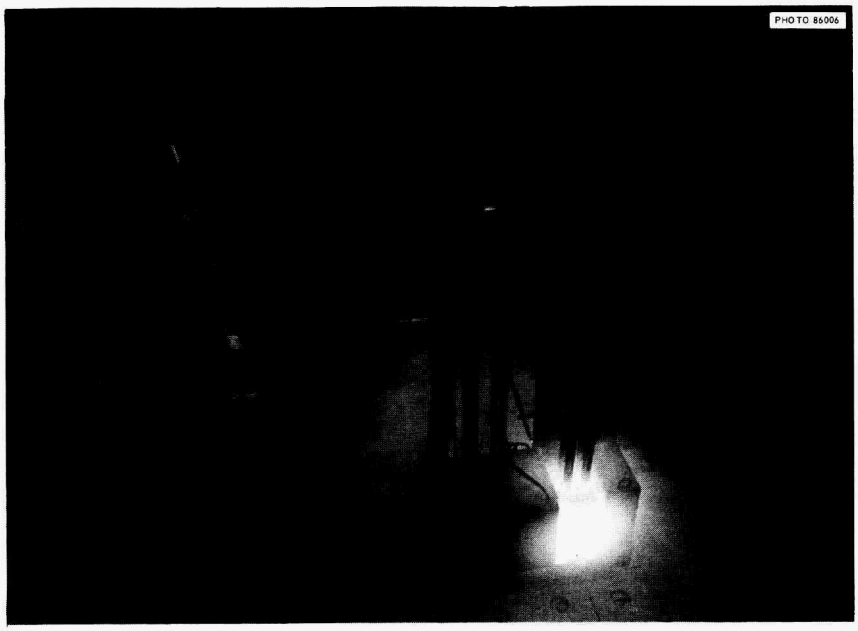

OPERATING MANUAL

FOR THE

2-MW BULK SHIELDING REACTOR

OAK RIDGE NATIONAL LABORATORY

OAK RIDGE, TENNESSEE

LOCKHEED MARTIN ENERGY RESEARCH LIBRARIES

3 4456 0513773 1

ABSTRACT

The BSR is a swimming-pool-type reactor. It has the capabilities of continuous operation at a power level of 2 Mw or at any desired lower power level. This manual presents descriptive and operational information. The reactor and its ancillary facilities are described from a physical and operational viewpoint. Detailed operating procedures are included which are applicable from source-level startup to full-power operation. Also included are procedures relative to the safety of personnel and equipment in the areas of experiments, radiation and contamination control, emergency actions, and general safety.

This manual supercedes all previous operating manuals for the BSR.

CONTENTS

			Page
1.	Introduction		1-1
2.	Reactor Operations		2-1
	2.1.	Startup	2-1
		2.1a. Responsibility	2-1
		2.1b. Personnel Hazards During Startup	2-2
		2.1c. Modes of Operation	2-2
		2.1d. General Requirements - Personnel and Instrumentation	2-3
		2.1e. Requirements and Procedures for Startup in Mode 1	2-7
		2.1f. Requirements and Procedures for Startup in Mode 2	2-20
		2.1g. Startup Following a Shutdown Due to the Dropping of One or More Shim Rods	2-33
		2.1h. Return to Full Power Following an Electrical Power Outage	2-34
		2.1i. Priorities in Restarting the ORR and/or BSR	2-36
		2.1j. Priorities in Making Operational Decisions	2-37
	2.2.	Steady-State Operations	2-39
		2.2a. Requirements for Continuous Power Operations	2-39
		2.2b. Heat-Power Calculations	2-42
		2.2c. Shim-Rod Positions	2-44
		2.2d. Remote Control of the BSR - Operating Procedures	2-45
	2.3.	Shutdowns	2-51
		2.3a. Shutting Down the Reactor	2-51
		2.3b. Refueling Shutdowns	2-52
		2.3c. Unscheduled Shutdowns	2-52
		2.3d. Radiation Control Measures During Shutdowns	2-52
		2.3e. Reporting Shutdowns	2-53

Page

2.4. Annunciator Procedures 2-55

2.4a. Introduction 2-55

2.4b. Description 2-55

2.4c. Operator Response 2-55

2.4d. Annunciators--Parameters, Setpoints, and Suggested Action 2-56

3. Instrumentation and Control 3-1

3.1. Reactor Controls and Safety Systems 3-1

3.1a. Introduction 3-1

3.1b. Nuclear Monitoring Channels 3-1

3.1c. The Safety System 3-2

3.1d. The Control (or Protective) System 3-3

3.1e. Procedures for Checking the Control and Safety System 3-8

3.2. Process Instrumentation 3-97

3.2a. Introduction 3-97

3.2b. Primary-Water-System Instrumentation 3-97

3.2c. Secondary-Water-System Instrumentation 3-102

3.2d. Building Ventilation System 3-105

3.2e. Normal Off-Gas System 3-106

3.2f. Process Instrumentation Checkout Procedures 3-106

3.3. The Local Console 3-107

3.3a. Left-Hand Side of Console 3-107

3.3b. Right-Hand Side of Console 3-109

3.4. The Remote Console 3-115

3.4a. Left-Hand Side of Panel 3-115

3.4b. Right-Hand Side of Panel 3-115

3.5. Radiation and Contamination Monitors 3-121

3.5a. The Facility Radiation and Contamination Alarm System (FRCAS) 3-121

3.5b. Miscellaneous Radiation Monitors 3-124

3.5c. Procedure for Checking the System by Operations Personnel 3-124

4. Reactor Components and Reactivity Control 4-1

4.1. Introduction 4-1

Page

4.2. General Precautions 4-2

4.3. Fuel Units 4-3

4.3a. References 4-3

4.3b. Description. 4-3

4.3c. Fuel Storage - General Requirements 4-7

4.3d. Shipping Fuel Elements from the BSR Pool 4-8

4.4. Control Rods and Drives 4-9

4.4a. References 4-9

4.4b. Description 4-9

4.5. Core Loadings 4-14

4.5a. Introduction 4-14

4.5b. Reactivity Worth of the Control Rods 4-14

4.5c. Core Loadings 4-14

4.5d. Approach-to-Critical Procedures 4-24

4.5e. Operational Procedures 4-30

4.6. Core Work - Specific Procedures 4-32

4.6a. Requirements for Fuel Handling 4-32

4.6b. Procedure for Transferring Fuel Elements 4-33

4.6c. Procedure for Transferring a Control-Rod-Drive Assembly 4-36

4.6d. Procedure for Transferring a Control-Rod-Drive Unit 4-39

4.7. Moving the Reactor Assembly 4-41

4.7a. Requirements 4-41

4.7b. Operational Procedures 4-41

4.8. Fuel Accountability 4-44

4.8a. Introduction 4-44

4.8b. Responsibility and Procedure for Maintaining Records 4-49

4.8c. Procedure for Calculating the Consumption of Uranium 4-53

5. Experiments 5-1

5.1. Introduction 5-1

Page

5.2. Experiment Facilities 5-2

5.2a. Thermal-Neutron-Irradiation Facility (East D_2O Tank) 5-2

5.2b. West D_2O Tank 5-7

5.2c. Liquid-Helium Cryostat 5-10

5.2d. Core-Position-Fifteen Facility 5-15

5.2e. Liquid-Nitrogen Cryostat 5-19

5.2f. North-Face Facility 5-24

5.2g. Core-Position-11 Facility 5-26

5.2h. Neutron-Collimater Facility 5-28

5.2i. Miscellaneous Facilities 5-31

5.3. Experiment Instrumentation 5-33

5.4. Experiment-to-Reactor Switches (The E-Panel) 5-34

5.4a. Modes of E-Switches 5-34

5.4b. Experiment Alarm 5-36

5.4c. Experiment Setback or Reverse 5-36

5.4d. Experiment Scram 5-37

5.5. General Rules for Review and Approval Procedure for Experiments 5-38

5.5a. Introduction 5-38

5.5b. General Criteria 5-39

5.6. Review, Approval, and Irradiation of Routine Experiments 5-41

5.6a. Review and Approval of Routine Experiments 5-41

5.6b. Irradiation of Routine Experiments 5-41

5.7. Review, Approval, and Irradiation of Nonroutine Experiments 5-45

5.7a. Review and Approval Nonroutine Experiments 5-45

5.7b. Irradiation of Nonroutine Experiments 5-47

5.8. Review, Approval, and Irradiation of New Experiments 5-48

5.8a. Review and Approval of New Experiments 5-48

5.8b. Irradiation of New Experiments 5-52

5.9. Changes in Operating Experiments 5-53

Page

5.10. Operational Procedures 5-51

5.10a. Sample Scheduling and Records 5-55

5.10b. Sample Handling 5-57

6. Reactor Cooling Systems 6-1

6.1. The Primary-Water Cooling System 6-1

6.1a. References 6-1

6.1b. Introduction 6-1

6.1c. Description 6-2

6.1d. General Precautions 6-7

6.1e. Operational Precautions 6-8

6.1f. Cooling System Startup Checks for Mode-1 Operation 6-9

6.1g. Cooling System Startup Checks for Mode-2 Operation 6-11

6.1h. Filling and Draining the Pool and Primary-Water Lines 6-14

6.1i. Operation of Skimmer and Nitrogen-16 Jets 6-17

6.1j. Demineralizer Units (Primary and Auxiliary) - Description and Procedures 6-18

6.1k. Filtering Beds - Description and Procedures 6-31

6.1l. Routine Checks 6-38

6.2. The Secondary-Water Cooling System 6-39

6.2a. References 6-39

6.2b. Introduction 6-39

6.2c. Description 6-39

6.2d. General Precautions 6-40

6.2e. Operational Procedures 6-41

6.2f. Chemical Conditioning of the Tower Water 6-44

6.2g. Procedures for Handling Hazardous Chemicals 6-48

6.2h. Filling and Draining the Tower Basin and Secondary System 6-53

6.2i. De-icing the Cooling Tower 6-54

6.2j. Routine Checks 6-54

6.2k. Special Chemical Procedures 6-55

Page

6.3. The Cooling Tower 6-57

6.3a. Description of Tower Components 6-58

6.3b. Preventive Maintenance 6-62

7. Waste Disposal Systems 7-1

7.1. Liquid Waste Disposal 7-1

7.1a. References 7-1

7.1b. Introduction 7-2

7.1c. Description 7-2

7.1d. Operational Procedures 7-4

7.2. Gaseous Waste Disposal 7-5

7.2a. References 7-5

7.2b. Introduction 7-5

7.2c. Description of the Normal Off-Gas System (NOG) 7-8

7.2d. Description of the Cell-Ventilation System (CV) 7-9

7.2e. Requirements and Functional Checks 7-12

7.2f. Removing the Cell-Ventilation System from Service 7-15

7.3. Solid Waste Disposal 7-16

7.3a. Introduction 7-16

7.3b. Responsibilities 7-17

8. Utilities 8-1

8.1. Potable Water 8-1

8.1a. References 8-1

8.1b. Introduction 8-1

8.1c. Description 8-1

8.1d. Operational Procedures 8-3

8.2. Process Water 8-4

8.2a. References 8-4

8.2b. Introduction 8-4

8.2c. Description 8-4

8.2d. Operational Procedures 8-5

8.3. Demineralized Water 8-6

8.3a. References 8-6

Page

8.3b. Introduction 8-6
8.3c. Description 8-6
8.3d. Operational Procedures 8-6
8.4. Compressed Air 8-7
8.4a. References 8-7
8.4b. Introduction 8-7
8.4c. Description 8-7
8.4d. Operational Procedures 8-9
8.5. Steam 8-10
8.5a. References 8-10
8.5b. Introduction 8-10
8.5c. Description 8-10
8.5d. Operational Procedures 8-10
8.6. Electricity 8-13
8.6a. References 8-13
8.6b. Normal Electric Power 8-13
8.6c. Emergency Electric Power 8-13
8.7. Communication System 8-16
8.7a. References 8-16
8.7b. Introduction 8-16
8.7c. Description 8-16
8.8. Liquid Nitrogen 8-20
9. Safety Procedures 9-1
9.1. General Safety Procedures 9-1
9.1a. References 9-1
9.1b. Introduction 9-1
9.1c. Requirements for Work Around the Reactor Pool 9-1
9.1d. Requirements for Handling Chemicals 9-2
9.1e. Securing System With Locks and Tags 9-3
9.1f. Requirements Concerning the Use of Mercury 9-4
9.1g. Location of Safety Equipment 9-10
9.1h. Miscellaneous Requirements 9-10

Page

9.2. Radiation Safety and Control 9-15
9.2a. References 9-15
9.2b. Introduction 9-15
9.2c. Responsibilities 9-16
9.2d. Exposure Limits 9-16
9.2e. Zoning Requirements 9-19
9.2f. Requirements for Shipping Irradiated Material 9-22
9.2g. Radiation Surveys 9-22
9.2h. Radiation and Contamination Monitors 9-24
9.2i. Analysis of Reactor Primary Water 9-24
9.3. Work Permits 9-27
9.3a. Introduction 9-27
9.3b. Radiation Work Permit 9-27
9.3c. Hazards Work Permit 9-30
10. Emergency Procedures 10-1
10.1. Emergency Ventilation and Building Containment 10-1
10.1a. References 10-1
10.1b. Introduction 10-2
10.1c. Description 10-2
10.1d. Controls for Building Containment 10-2
10.1e. Normal Operations - Procedures 10-5
10.2. Emergency Electrical Power 10-8
10.2a. References 10-8
10.2b. Introduction 10-8
10.2c. Description 10-8
10.2d. Operational Procedures 10-11
10.2e. Reliability Checks 10-12
10.3. Emergency Shielding for the Reactor Pool 10-14
10.3a. Introduction 10-14
10.3b. Operational Procedures 10-14
10.4. Emergency Cooling 10-15
10.5. Emergency Services 10-16
10.5a. Introduction 10-16

Page

10.5b. Fire Department 10-16

10.5c. Guard Department 10-17

10.5d. Health Physics 10-18

10.5e. Dispensary 10-19

10.5f. Maintenance 10-19

10.6. Evacuation Procedures 10-20

10.6a. Emergency Personnel 10-20

10.6b. Responsibilities of Emergency Personnel . . . 10-20

10.6c. Laboratory Emergency Signals 10-22

10.6d. Laboratory Evacuation (Emergency Outside the Department Area) 10-23

10.6e. Local Area Evacuation (Emergency Outside the Department Area) 10-24

10.6f. Special Emergency Evacuation Procedure for Building 3001 10-27

10.6g. Building Evacuation - Emergency in Buildings 3004 and 3005 10-30

10.6h. Building Evacuation - Emergency in Building 3010 10-33

10.6i. Building Evacuation - Emergency in Building 3042 10-37

10.6j. Response to Air Attack Warnings 10-43

10.6k. Evacuation Procedure Drills 10-44

11. Auxiliary Equipment 11-1

11.1. Reactor Bay Crane 11-1

11.1a. Introduction 11-1

11.1b. Description 11-1

11.1c. Responsibility 11-1

11.1d. Operational Procedures 11-1

11.2. Scintillation Counter 11-4

11.2a. Introduction 11-4

11.2b. Precautions 11-4

11.2c. Voltage Adjustments 11-5

11.2d. Calibration 11-5

11.2e. Sample Preparation 11-6

11.2f. Counting 11-7

Page

11.3. The Beckman pH Analyzer 11-8

11.3a. Introduction 11-8

11.3b. Description 11-8

11.3c. Operational Procedures 11-9

11.4. Underwater Periscope 11-11

11.4a. Introduction 11-11

11.4b. Description 11-11

11.4c. Assembly Procedures 11-16

11.4d. Procedure for Transferring the Periscope to the Pool 11-17

11.4e. Focusing Procedures 11-18

11.4f. Procedure for Disassembling the Periscope 11-18

11.5. Spectrometer Crane 11-20

11.5a. Introduction 11-20

11.5b. Description 11-20

12. Records and Data Accumulation 12-1

12.1. Introduction 12-1

12.2. Daily Report Forms 12-2

12.2a. BSR Hourly Readings 12-2

12.2b. BSR Power Changes and Accumulated Power 12-2

12.2c. BSR Shift Check Sheets 12-2

12.2d. BSR Daily Summary 12-3

12.2e. BSR Log Book 12-3

12.3. Miscellaneous Report Forms 12-11

12.3a. BSR Weekly Report 12-11

12.3b. BSR Quarterly Report 12-11

12.3c. BSR Startup Checklist 12-11

12.3d. BSR Shutdown Checklist 12-11

13. Distribution 13-1

FIGURES

		Page
2.1.1.	Isometric Drawing of the In-Pool Portion of the Forced Convection Cooling System for Mode-2 Operation	2-3
2.1.2.	Restricted Isometric View of the BSR Showing the Flow Path for Natural Convection Cooling During Mode-1 Operation	2-4
2.4.1.	Nuclear Annunciator Right Panel	2-57
2.4.2.	Nuclear Annunciator Left Panel	2-63
2.4.3.	Location of Seven Remote Scram Switches on First Floor of BSF, Building 3010	2-68
2.4.4.	Process Annunciator Panel	2-72
3.3.1.	BSR Local Control	3-108
3.3.2.	Indicator-Light and/or Switch Panel on Right Side of Console	3-110
3.3.3.	Indicator-Light and/or Switch Panel on Right Side of Console	3-110
3.3.4.	Indicator-Light and/or Switch Panel on Right Side of Console	3-110
3.3.5.	Indicator-Light and/or Switch Panel on Right Side of Console	3-111
3.3.6.	Indicator-Light and/or Switch Panel on Right Side of Console	3-111
3.3.7.	Indicator-Light and/or Switch Panel on Right Side of Console	3-112
3.3.8.	Indicator-Light and/or Switch Panel on Right Side of Console	3-112
3.3.9.	Indicator-Light and/or Switch Panel on Right Side of Console	3-112
3.3.10.	Scram Reset	3-113
3.3.11.	Power Range Selector Switch	3-113
3.4.1.	BSR Remote Control Console	3-116
4.3.1.	BSR Fuel Element	4-4
4.3.2.	Special Fuel Element for Control Rod	4-5
4.4.1.	BSR Control Rod	4-10
4.4.2.	BSR-PCA Rod Drive Mechanism	4-12
4.5.1.	No. 1 Shim Rod Calibration	4-15
4.5.2.	No. 2 Shim Rod Calibration	4-16

		Page
4.5.3.	No. 3 Shim Rod Calibration	4-17
4.5.4.	No. 4 Shim Rod Calibration	4-18
4.5.5.	No. 5 Shim Rod Calibration	4-19
4.5.6.	No. 6 Shim Rod Calibration	4-20
4.5.7.	Differential and Integral Worth of Shim Rods 1 Through 6	4-21
4.5.8.	Integral Worth of Rods 1 Through 4	4-22
4.5.9.	Integral Worth of Rods 5 and 6	4-23
4.6.1.	Top of Fuel-Handling Tool	4-34
4.6.2.	Bottom of Fuel-Handling Tool	4-35
4.7.1.	Isometric Drawing of the BSR	4-42
4.8.1.	BSR Core Configuration Board	4-46
5.2.1.	Thermal Neutron Irradiation Facility	5-3
5.2.2.	Thermal Neutron Irradiation Facility	5-4
5.2.3.	The Liquid Helium Cryostat	5-12
5.2.4.	Schematic Drawing of the Position Fifteen Facility	5-18
5.2.5.	The Liquid Nitrogen Cryostat	5-21
5.2.6.	North Face Irradiation Facility	5-25
5.2.7.	Neutron Collimator Facility	5-29
5.4.1.	E-Panel Switches	5-35
6.1.1.	2 Mw BSR Cooling Water System Flow Sheet	6-3
6.1.2.	Isometric Drawing of the In-Pool Portion of the Forced Convection Cooling System for Mode-2 Operation	6-4
6.1.3.	Restricted Isometric View of the BSR Showing the Flow Path for Natural Convection Cooling During Mode-1 Operation	6-5
6.2.1.	Reactor Inlet Water Temperature Controller	6-42
7.1.1.	Liquid Waste Services	7-3
7.2.1.	Gaseous Waste Disposal System	7-6
7.2.2.	Flow Diagrams of Gaseous Waste Disposal Systems In the Stack Area	7-7
7.2.3.	Building Ventilation Filters	7-14
8.2.1.	Potable, Process and Demineralized Water	8-4
8.4.1.	Compressed Air Services	8-8
8.5.1.	Steam Services	8-11

Page

8.6.1. Electrical One-Line Diagram 8-14

9.1.1. Location of Seven Remote Scram Switches on First Floor of BSF, Building 3010 9-11

9.1.2. Fire Protection System 9-12

9.1.3. Location of Monitrons and Continuous Air Monitors in BSF, Building 3010 9-13

10.1.1. Controls for Building Containment 10-3

10.2.1. Emergency Power Distribution 10-9

11.4.1. Underwater Periscope 11-12

11.4.2. Objectives 11-13

11.4.3. Tools 11-14

TABLES

		Page
3.1.1.	Instrument Channels, Details	3-1
3.2.1.	Temperature Instrumentation for Miscellaneous Items	3-101
3.2.2.	Pool Water Temperature Instrumentation	3-102
3.2.3.	Fan Speed Control	3-103
4.3.1.	Selected Reference Dimensions for BSR Fuel Elements	4-6
5.2.1.	Neutron-Flux and Gamma-Ray Data Measured in Certain BSR Irradiation Facilities at 2 Mw	5-5
6.1.1.	Procedure for Regenerating the Primary Demineralizer	6-21
6.1.2.	Procedure for Regenerating the Auxiliary Demineralizer	6-32
6.2.1.	Fan Speed Control	6-44
9.1.1.	Valves in the BSR Area That Should Either Be Tagged or Locked in Their Normal Position	9-5
9.2.1.	Maximum Permissible Dose (MPD) in Rems	9-17
9.2.2.	Weekly Maximum Exposure Limits Recommendations	9-18
9.2.3.	Approval Required for Exposure to High Dose Rates	9-18
9.2.4.	Regulations for Posting and Establishing Radiation Zones	9-20
9.2.5.	Shipping Regulations, Radioactive Materials	9-22

EXAMPLES

		Page
3.1.1.	Reactor Instrumentation and Controls Maintenance Procedures	3-9
3.5.1.	Facility Radiation and Contamination System Checkout Procedure	3-127
4.5.1.	BSR Replacement Loadings	4-25
4.8.1.	BSR Fuel Record Card	4-45
4.8.2.	BSR Core	4-47
4.8.3.	Transfer Memo	4-48
4.8.4.	SS Materials Inventory and Calculations Sheet	4-50
4.8.5.	Source, Nuclear, and Special Materials Transfer	4-52
5.6.1.	Experiment Information Form	5-42
5.9.1.	Experiment Status Change Report	5-54
5.10.1.	Sample Schedule Sheet	5-56
6.3.1.	BSR Cooling Tower Inspection	6-64
7.3.1.	Burial Authorization for Radioactive-Contaminated Solid Waste	7-18
9.1.1.	Procedure for Locking Out Electrical Switches	9-9
9.2.1.	Radiation Hazard - Material Transfer Tag	9-23
9.2.2.	BSR Area Radiation Survey	9-25
9.3.1.	Radiation Work Permit	9-28
9.3.2.	Hazards Work Permit	9-31
12.2.1.	BSR Hourly Readings	12-5
12.2.2.	BSR Power Changes and Accumulated kwh	12-6
12.2.3.	BSR Routine Check Sheet (12-8 Shift)	12-7
12.2.4.	BSR Routine Check Sheet (8-4 Shift)	12-8
12.2.5.	BSR Routine Check Sheet (4-12 Shift)	12-9
12.2.6.	BSR Daily Summary	12-10
12.3.1.	BSR Weekly Report	12-13
12.3.2.	BSR Startup Check List	12-14
12.3.3.	BSR Shutdown Check List	12-21

The authors wish to acknowledge the efforts of E. D. Lance, J. M. Miller, R. G. Orrison, and J. R. Thomas in the preparation of this report.

1. INTRODUCTION

Reactors and their operation may be potentially more hazardous than many industrial enterprises. Generally, this is due to the ever-present possibility of sudden, large power increases in the reactor itself and the inability of human senses to detect the radiation resulting from such an excursion. The possibility of contamination of a large area, as well as local contamination, is an added hazard that might result from such an excursion.

To minimize the inherent hazards associated with operating a reactor, in addition to those common to any industrial plant, detailed procedures have been established to serve as guides in the various phases of reactor operations. These procedures are to be acknowledged whenever applicable. In cases where the operation is more complex or where errors cannot be tolerated, the use of checklists will be incorporated in that particular procedure.

The core of the ORNL Bulk Shielding Reactor (BSR) consists of an assembly of MTR-type fuel elements. The core is located in a pool of water 40 ft long, 20 ft wide, and 22 ft deep. The water serves as the reactor coolant, moderator, shield, and reflector. The support structure for the core is attached to a movable reactor bridge; this bridge is supported on steel rails located along the east and west walls of the pool. An additional movable bridge, called the instrument bridge, is used for a working platform and to provide space for special equipment. This bridge is supported by the same poolside rails used to support the reactor bridge.

A forced-flow cooling system allows continuous operation at a power level of 2 Mw. In addition to the normal reactor control instrumentation, a closed-circuit television monitoring system is provided, with remote controls located at the ORR.

2. REACTOR OPERATIONS

2.1. Startup

2.1a. Responsibility

The most hazardous time of reactor operation is during a startup. To avoid a situation in which some prestartup checks are neglected or abnormal conditions are not noted because of dual supervision, only one supervisor will be in charge during a startup. The supervisor in charge will assure himself that all checks have been made and that the reactor and experiments are ready for operation. He must direct the startup from the control room, giving instructions to personnel at other stations, as needed, via the intercommunication and/or public-address system. The supervisor in charge when the startup checks are made must follow through with the startup until the desired power level is attained.

The minimum required personnel for a normal reactor startup is a supervisor and a reactor operator. Occasionally, an instrument mechanic and/or instrument engineer is needed for standby service. Other personnel are superfluous and may indeed present confusion and distraction to the operation.

During each reactor startup, it shall be the responsibility of the supervisor in charge to evaluate the number of personnel required for the operation and to excuse interested bystanders from the control room to the observation post outside the control room window. There will be special occasions when extra personnel (i.e., trainees, committees) will necessarily be present. During such times, those observing should be instructed to avoid confusing and/or interfering with the operation.

2.1b. Personnel Hazards During Startup

Although every effort is made to ensure the safety of all reactor facilities, the possibility of human error or equipment failure is always present; therefore, the consequences of radiation and contamination incidents should be well understood by Reactor Operations personnel. Since reactor startups, in general, are potentially hazardous, each should be approached with the same degree of caution. A radiation survey should be made once per week (as indicated on the routine checklist) whenever the reactor is operated; and, whenever applicable, Health Physics personnel should be utilized for monitoring and checking.

2.1c. Modes of Operation

1. Mode 1. - The reactor core is cooled by natural convection of the 130,000 gallons of pool water. A flapper-type valve (see Figure 2.1.1 and 2.1.2) on the plenum at the lower section of the reactor grid is open in this mode of operation; when this valve is open, the flow path is as shown in Figure 2.1.2. The maximum steady-state power level is 1000 kw nominal. (Reactor operation in this mode is restricted, administratively, to those occasions when the forced cooling system is not available for use.)

2. Mode 2. - The reactor core is cooled by the forced-flow cooling system. The flapper valve is closed in this mode of operation; the flow path is as shown in Figure 2.1.1. The maximum steady-state power level is 2000 kw nominal.

ORNL DWG. 67-5973

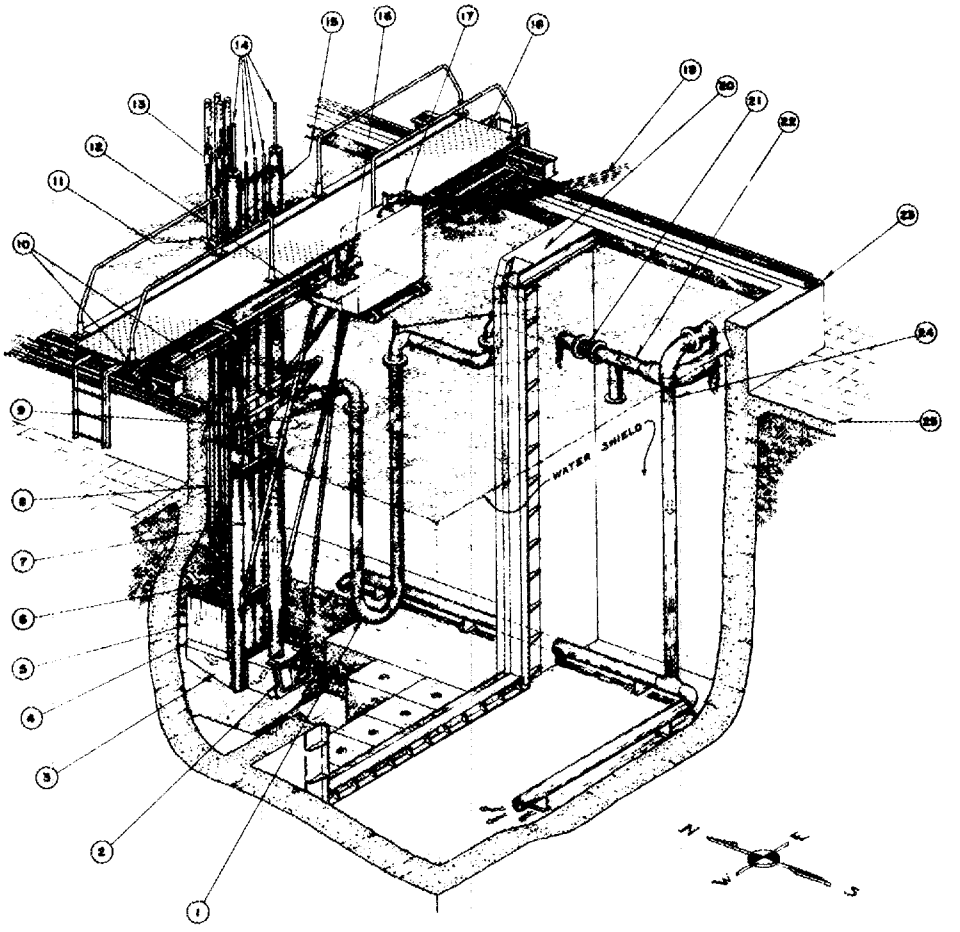

— LEGEND —

1. FLEXIBLE COOLING-WATER LINE
2. NATURAL-CONVECTION-COOLING INLET VALVE
3. WATER MANIFOLD AND REACTOR GRID SUPPORT
4. FUEL-ELEMENT GRID PLATE
5. FUEL ELEMENTS (REACTOR CORE)
6. REACTOR COOLING-WATER INLET
7. IONIZATION CHAMBERS AND GUIDES
8. SHIM-ROD-DRIVE GUIDE TUBES
9. WATER SPRAY SYSTEM FOR NITROGEN-16 DISPERSION
10. NORTH-SOUTH TRAVERSING DRIVE
11. SHIM-ROD-DRIVE LATCH BAR
12. REACTOR SUPPORT CARRIAGE
13. SHIM-ROD DRIVE MOTOR AND GEAR BOX
14. IONIZATION-CHAMBER SUPPORT TUBES
15. REACTOR SUPPORT TUBES
16. INLET-VALVE OPERATOR
17. INSTRUMENT AND CONTROLS JUNCTION BOX
18. REACTOR SUPPORT BRIDGE (MOBILE)
19. REACTOR INSTRUMENT AND CONTROL CABLES
20. DAM WITH GATE REMOVED
21. EXPANSION JOINT
22. REACTOR COOLING-WATER LINE TO HEAT EXCHANGER
23. POOL PARAPET
24. REACTOR COOLING-WATER RETURN LINE FROM HEAT EXCH.
25. FLOOR LEVEL OF BUILDING

Fig. 2.1.1. Isometric Drawing of the In-Pool Portion of the Forced Convection Cooling System for Mode-2 Operation

ORNL DWG. 67-5975

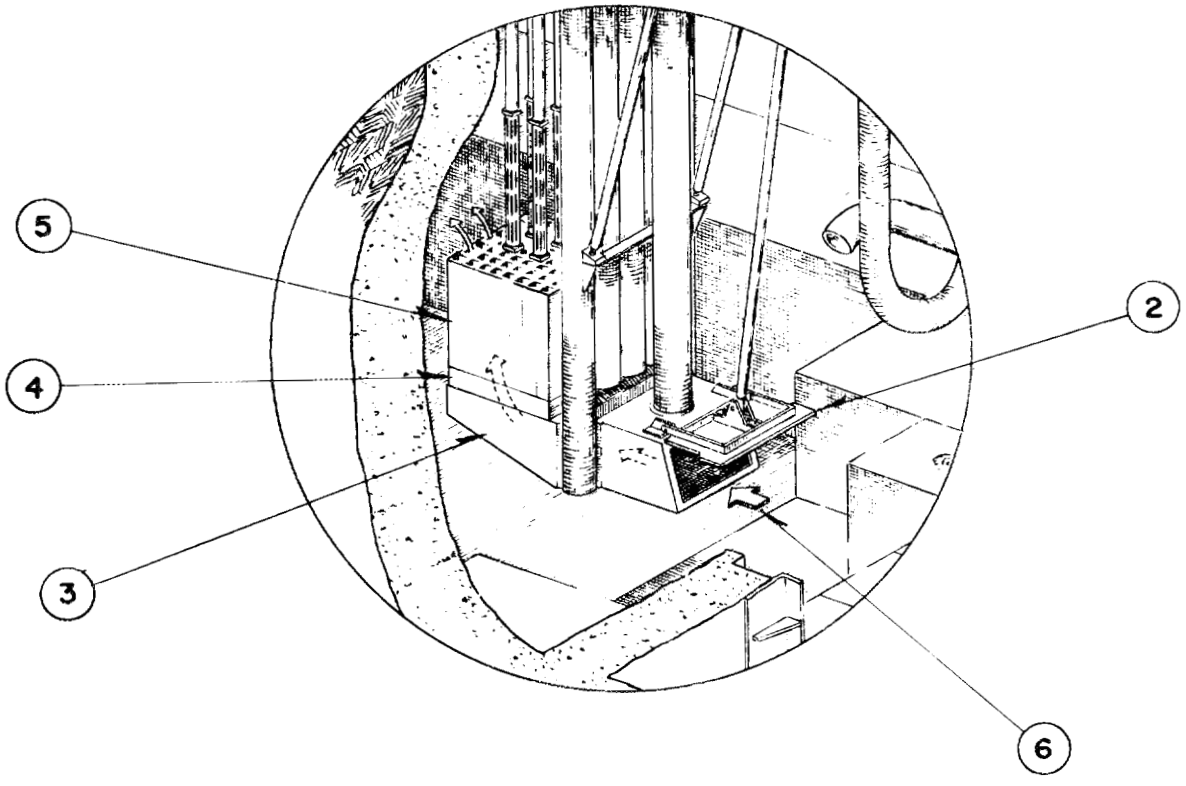

Fig. 2.1.2. Restricted Isometric View of the BSR Showing the Flow Path for Natural-Convection Cooling During Mode-1 Operation

2.1d. General Requirements - Personnel and Instrumentation

1. Personnel. - The supervisor in charge during a reactor startup should be sure of the proper operation of all auxiliary system instrumentation and nuclear instrumentation. He must initial each procedural item on the startup checklist as required. He must remain in the control room during the startup. After it is established that all monitoring channels are functioning properly and after the desired power level is attained, the supervisor may leave the control room.

   If remote operation is intended, the ORR console operator should be notified of the status of the reactor. He should then check the audio and video communication system before the local control-selector knob is placed in the REMOTE position. (Refer to Section 2.2d for details on remote operation.)

2. Instrumentation. - Under Normal conditions, the operation of the reactor is monitored by the following instrumentation connected to the reactor safety or protective circuits.

   a. Mode 1

      (1) Flapper-valve position indicator.

      (2) Three power-level safety channels.

      (3) One log-N channel (including period instrumentation).

      (4) One fission chamber channel.

      (5) One servo channel.

      (6) Under normal conditions, the following additional instrumentation will be in operation:

(a) Three radiation monitors located in the containment volume.

(b) Three continuous air monitors located in the containment volume.

(c) One radiation monitor, located in the reactor room, which is capable of activating the building containment system when a radiation level of $\geq$150 mr/hr occurs.

b. Mode 2

(1) Flapper-valve position indicator.

(2) Three power-level safety channels.

(3) One log-N channel (including period instrumentation).

(4) One fission chamber channel.

(5) One servo channel.

(6) One ΔT channel.

(7) One reactor primary-water flow channel.

(8) One reactor ΔP channel.

(9) Under normal conditions, the following additional instrumentation will be in operation:

(a) Three radiation monitors located in the containment volume.

(b) Three continuous air monitors located in the containment volume.

(c) One radiation monitor for reactor exit water.

(d) One radiation monitor for decay-tank off-gas.

(e) One radiation monitor located in the reactor room

which is capable of activating the building containment system when a radiation level of ≥150 mr/hr occurs.

2.1e. Requirements and Procedures for Startup in Mode 1

1. Startup Operation. - Whether the reactor is subcritical or critical at zero power, at an intermediate level, or in the power range and it is desired to make the reactor critical or to increase the reactor power level, the minimum instrumentation shall be:

   a. Flapper-valve position indicator.

   b. Two level-safety channels.

   c. One log-N period channel.

   d. One neutron-level-detection channel (log-N or fission chamber) that is reliably detecting the neutron level in the reactor.

   e. One radiation monitor located in the reactor room.

   f. One continuous air monitor located in the reactor room.

   g. One operating radiation-detection monitor which provides information on radioactivity in the reactor cooling system.

   h. One instrument, located in the reactor room, which will actuate the building containment system upon detection of a radiation level ≥150 mr/hr.

   It should be pointed out that the limitations are set forth as an absolute minimum. In all cases where practical, a maximum complement of instrumentation will be made available. The failure of a particular channel is not necessarily a crucial situation in itself if the minimum complement of instrumentation can be

provided; however, repeated failures of a single channel or simultaneous failures of more than one channel would be cause for concern. Under such conditions, an evaluation should be made at the time. Operation of the reactor with minimum instrumentation requirements shall be preceded by authorization from the reactor supervisor or his designated representative. Should an occasion arise when the minimum instrumentation cannot be met, the reactor power must not be increased; and immediate action must be taken to obtain necessary repairs.

2. Preparation for Startup in Mode 1

a. Check of the Reactor Area. - The reactor area should be checked to ensure that this area is in a safe condition for reactor operation. (These checks should be made while completing Section A of the Check List.)

(1) Determine that the reactor loading and the reactor position in the pool is proper.

(2) Determine that all core pieces are in place and properly seated and that all experiment rigs are in their proper locations and secured.

(3) Insure that the shim-rod-drive units and the fission-chamber drive units are in their proper positions and that these units are fastened to the hold-down arms.

(4) Determine that all core work has been completed and make a final inspection of the core for foreign objects and for any abnormalities.

(5) Determine that the reactor carriage, reactor bridge, and the instrument bridge are locked in position.

b. Check of Experiment Facilities. - The experiment facilities should be checked to insure that they are in a safe condition for reactor operation. (These checks should be made while completing Section B of the Startup Check List.)

(1) Determine that all changes to experiments are completed.

(2) Determine that all experiment information sheets are current.

(3) Determine that Experiment Safety-Check Sheets have been completed by instrument engineers for all applicable experiments.

(4) Determine that Special Instruction Sheets for all experiments are complete and current.

c. Startup of Water Systems. - The water systems must be put into operation and checked for proper operation. (These checks should be made while completing Section C of the Startup Check List.)

(1) Determine that the pool is filled to the proper level and that all pool-level alarms have been cleared.

(2) Determine that the flapper valve is in the fully open position.

(3) Determine that the jet-diffuser-system flow is, or has been, properly established if the reactor is to be operated above 100 kw.

(4) Determine that flow through the demineralizer and through the bypass filter is, or has been, properly established.

(5) Determine that the water purity is adequate.

(6) Determine that the skimmer system is in operation.

d. Instrumentation Checks. - (These checks should be made while completing Section E of the Startup Check List.)

(1) Determine that local operation has been selected.

(2) Determine that all utility services are in order as specified by the Startup Check List.

(3) Determine that all recorders, amplifiers, etc., are turned on at least one-half hour prior to operation of the reactor.

(4) Determine that the ionization chambers are in their proper locations and at their proper elevations. (Check the log book for any movement during the preceding shutdown.)

(5) Determine that the fission-chamber channel is calibrated and operating properly.

(a) Set the log count-rate meter on CALIBRATE and adjust until the log count-rate recorder indicates 60 counts/sec. Return the log count-rate meter to USE.

(b) Withdraw the fission chamber until the counting rate is observed to decrease. Then insert the fission chamber until the counting rate is observed to increase. Finally, withdraw the fission chamber to its withdraw limit.

(c) While comparing the counting rate of the channel to the posted calibration curve (for response to gamma rays only), vary the pulse height setting (PHS). Determine that the resulting response curve for the

channel is essentially the same as that posted (i.e., that the gamma-ray response has not shifted).

(d) Set the PHS and the gain on the log count-rate meter at the posted startup value.

(e) Position the fission chamber to obtain a counting rate >20 but <40 counts/sec.

(6) Determine that the log-N channel is adjusted properly.

(a) Determine that the log-N channel power-supply meters indicate that the positive voltage and negative voltage applied to the chamber are within ±10% of the posted values.

(b) Using the built-in "Ground", "Lo Calibrate", and "Hi Calibrate" signals, calibrate the log-N amplifier with the log-N recorder using the "Gnd Set", "Calibrate", and "Gain" potentiometers, respectively.

(7) Determine that the servo channel is adjusted properly.

(a) Determine that the servo channel power-supply meters indicate that the positive voltage and negative voltage applied to the chamber are within ±10% of the posted values.

(b) Push the micromicroammeter "zero" button, set the "power range" selector switch* on 20 w, and zero the micromicroammeter. Return the range selector switch to its previous position.

---

*The micromicroammeter range setting defines the permissible reactor operating power range; therefore, the micromicroammeter range switch (or selector) is the "power range" switch (or selector).

(8) Compare the control-rod magnet currents with the posted "N_L" values and adjust the magnet amplifiers, if necessary, to obtain the proper values. (If the magnet currents for more than two rods differ by more than ±5 ma from the posted values, contact the reactor supervisor.)

(9) Calibrate the level-safety channels (quarterly).

(10) Perform the rod-drive and rod-response test following repositioning of, or any work on, the drive units (also performed quarterly).

(11) Perform the scram checks. (These checks involve raising all control rods about 1 in. and scramming them by the manual button, log-N amplifier period button, and each level-safety Jordan button, in turn. This section of the check list is self-explanatory.)

(12) Set the "power range" switch on the desired range. Then set the servo-demand potentiometer for the desired fraction of that range by manipulating the lever-type "demand" switch.

(13) Determine that all air monitors and radiation monitors (Monitrons) are operating properly.

(14) Determine that all instrument channels are working properly and the corresponding recorders are tracking.

(15) If the annunciator panels are not clear, the reason for any alarm should be determined and evaluated.

e. Other Checks (These checks should be made while completing Section F of the Startup Check List.)

(1) Determine that the public-address system is operating properly.

(2) The supervisor should review the next power level schedule.

(3) An announcement should be made over the public-address system before the reactor startup if requested by experimenters.

(4) Determine that the core-loading chart is up to date and properly approved following any core changes.

(5) Determine that the containment system is in the condition required for reactor startup. (Refer to Sections 7.2d and 10.1 for the proper operating conditions of the containment system.)

(6) If the power level schedule indicates extended periods of high-power operation, the air-conditioning system for the pool area must be functioning properly.

3. Startup in Mode 1 Via Operator Start*

a. Since all checks listed in Section 2.1e.2 must have been satisfactorily completed, certain required conditions should exist; however, these conditions are restated below.

(1) Key switch S1 in the ON position

(2) Preferred-rod selector switch S10 in the desired position; i.e., to select rod 1, 2, or 3.

(3) Raise-clutch mode switch S3 in the RUN position.

*Operator start (Manual control) is used only when the servo system is not functioning properly.

(4) Individual "clutch actuate" switches S12-S15 and S22-S23 in the HOLD position.

(5) Remote scram switch S11 in OPERATE and scrams reset by pushing the scram-reset button, PB-1. (The local scram switch is a push button, PB-2.)

(6) No reverse request exists.

(7) Fission chamber positioned so that the output of the count-rate channel is >2 counts/sec. (If it is desired to operate the fission chamber in the automatic mode, any repositioning will be accomplished automatically.)

(8) If the desired operating power level is <400 kw (20% N_F), omit step 9, below.

(9) If the desired operating power level is >400 kw (20% N_F), the "power range" switch must be on the 2-Mw setting and the servo demand (logarithmic potentiometer) must be at its lower limit (5% N_F).

b. Move the "group-actuate" switch, S4, to the WITHDRAW position and hold the switch in that position. If a 25-sec period is detected by either the count-rate channel or the log-N channel, rod withdrawal is inhibited until the period becomes longer. (Until the log-N channel indicates a power level of 0.01% N_F and log-N confidence is obtained, several additional conditions of the count-rate channel which inhibit rod withdrawal are: the count-rate meter must, of course, be in operation; the counting rate must exceed 2 counts/sec and be less than 8000 counts/sec; and the fission chamber must not be in motion.)

c. During this stage, the proper "power range" switch setting must be selected (even though the servo system is not on) or a reverse will be initiated. The switch should have been set for the desired operating range prior to the startup as required by the Startup Check List. (The other alternative would require the operator to increase the range-switch setting as the power level increases; however, this distraction of the operator is undesirable when the reactor is under manual control.)

d. If the desired operating power level is >400 kw (20% N_F), "run" must be obtained. To obtain "run", the power level (as indicated by the log-N channel) must be >1.5% N_F and <10% N_F, the "power range" switch must be on the 2-Mw setting, the log-N period must be >100 sec, and the servo demand (logarithmic potentiometer) must be at its lower limit (5% N_F), even though the servo system is OFF. If these conditions exist, the run mode is automatically obtained.

e. When the desired power level is obtained, the positions of the shim rods should be adjusted so that rods 1-4 are evenly withdrawn. (Rods 5 and 6 should be evenly withdrawn to the last recorded position required to make the heat power equal to the instrument power.)

4. <u>Startup in Mode 1 Via Instrument Start</u>

a. Since all checks listed in Section 2.1e.2 must have been satisfactorily completed, certain required conditions should exist; however, these conditions are restated below.

(1) Key switch S1 in the ON position.

(2) Preferred-rod selector switch S10 in the desired position; i.e., to select rod 1, 2, or 3.

(3) Raise-clutch mode switch S3 in the RUN position.

(4) Individual "clutch-actuate" switches S12-S15 and S22-S23 in the HOLD position.

(5) Remote scram switch S11 in OPERATE and scrams reset by pushing the scram-reset push button, PB-1. The local scram switch is a push button, PB-2.

(6) No reverse request exists.

(7) Fission chamber positioned so that the output of the count-rate channel is >20 counts/sec but <40 counts/sec; the fission chamber should be in the automatic mode, i.e., switch S19 should be in the AUTO position.

(8) If the desired operating power level is not >200 kw (10% N_F), omit step 9, below.

(9) If the desired operating level is >200 kw (10% N_F), the "power range" switch must be on the 2-Mw setting and the servo demand (logarithmic potentiometer) must be at its lower limit (5% N_F).

b. Turn the instrument-start switch to the ON position; this will initiate the startup sequence. The following events will occur as demanded by the status of the reactor system:

(1) The servo system will be activated.

(2) The rods will be withdrawn continuously. If a 25-sec period is detected by either the count-rate channel or

the log-N channel, rod withdrawal is inhibited until the period becomes longer. (Until the log-N channel indicates a power level of 0.01% N_F and log-N confidence is obtained, several additional conditions of the count-rate channel which inhibit rod withdrawal are: the count-rate meter must, of course, be in OPERATE; the counting rate must exceed 20 counts/sec and be less than 8000 counts/sec; and the fission chamber must not be in motion.)

c. When the servo system senses an "insert error", the instrument (controlled) startup will be terminated. The servo will maintain the reactor power level at the level demanded.

d. If the desired power level is >200 kw (10% N_F), "run" must be obtained. "Run" should be obtained as soon as the servo system stabilizes the reactor power at the 100-kw (5% N_F) level; i.e., the required conditions should naturally result from servo system action. The servo demand (logarithmic potentiometer) may then be increased to the desired level by manipulating the lever-type "demand" switch.

e. When the desired power level is obtained, the positions of the shim rods whould be adjusted so that rods 1-4 are evenly withdrawn. (Rods 5 and 6 should be evenly withdrawn to the last recorded position required to make the heat power equal to the instrument power. This operation is performed so that shim rods 5 and 6 and the neutron chambers are in approximately the same relationship; consequently, the shadowing effect from rods 5 and 6 will be about the same during power operation.

5. Startup in Mode 1 Via Operator Start with Servo

a. Since all checks listed in Section 2.1e.2 must have been satisfactorily completed, certain required conditions should exist; however, these conditions are restated below.

(1) Key switch S1 in the ON position.

(2) Preferred rod selector switch S10 in the desired position; i.e., to select rod 1, 2, or 3.

(3) Raise-clutch mode switch S3 in the RUN position.

(4) Individual "clutch-actuate" switches S12-S15 and S22-S23 in the HOLD position.

(5) Remote scram switch S11 in OPERATE and scrams reset by pushing the scram-reset push button, PB-1. (The local scram switch is a push button, PB-2.)

(6) No reverse request exists.

(7) Fission chamber positioned so that the output of the count-rate channel is >2 counts/sec. (If it is desired to operate the fission chamber in the automatic mode, any repositioning will be accomplished automatically.)

(8) If the desired operating power level is not >200 kw (10% N_F), omit step 9, below.

(9) If the desired operating power level is >200 kw (10% N_F), the "power range" switch must be on the 2-Mw setting and the servo demand (logarithmic potentiometer) must be at the lower limit (5% N_F).

b. Turn the servo switch, S17, to the ON position and then return it to the HOLD position. The servo system will be energized

unless the regulating rod is at either the upper or lower limit of the regulating-rod span.

c. Move the group-actuate switch, S4, to the WITHDRAW position and hold the switch in that position. If a 25-sec period is detected by either the count-rate channel or the log-N channel, rod withdrawal is inhibited until the period becomes longer. (Until the log-N channel indicates a power level of 0.01% N_F and log-N confidence is obtained, several additional conditions of the count-rate channel which inhibit rod withdrawal are: the count-rate meter must, of course, be in OPERATE; the counting rate must exceed 2 counts/sec and be less than 8000 counts/sec; and the fission chamber must not be in motion.)

d. When the servo system senses an "insert error", the servo will maintain the reactor power level at the level demanded.

e. If the desired power level is >200 kw (10% N_F), "run" must be obtained. "Run" should be obtained as soon as the servo system stabilizes the reactor power at the 100-kw (5% N_F) level; i.e., the required conditions should naturally result from servo system action. The servo demand (logarithmic potentiometer) may then be increased to the desired level by manipulating the lever-type "demand" switch.

f. When the desired power level is obtained, the positions of the shim rods should be adjusted so that rods 1-4 are evenly withdrawn. (Rods 5 and 6 should be evenly withdrawn to the last recorded position required to make the heat power equal to the instrument power.)

2.1f. Requirements and Procedures for Startup in Mode 2

1. Startup Operation. - Whether the reactor is subcritical or critical at zero power, at an intermediate level, or in the power range and it is desired to make the reactor critical or to increase the reactor power level, the minimum instrumentation shall be:

   a. Flapper-valve position indicator.

   b. Two level-safety channels.

   c. One log-N period channel.

   d. One neutron-level-detection channel (log-N or fission chamber) that is reliably detecting the neutron level in the reactor.

   e. One ΔT channel.

   f. One primary-coolant flow channel.

   g. One core ΔP channel

   h. One radiation monitor located in the reactor room.

   i. One continuous air monitor located in the reactor room.

   j. One operating radiation-detection monitor associated with the reactor cooling system.

   k. One instrument, located in the reactor room, which will actuate the building containment system upon detection of a radiation level $\geq$150 mr/hr.

2. Preparation for Startup in Mode 2

   a. Checks of the Reactor Area. - The reactor area should be checked to ensure that this area is in a safe condition for reactor operation. (These checks should be made while completing Section A of the Startup Check List.)

(1) Determine that the reactor loading and the reactor position in the pool is proper.

(2) Determine that all core pieces are in place and properly seated and that all experiment rigs are in their proper locations and secured.

(3) Ensure that the shim-rod-drive units and the fission-chamber drive units are in their proper positions and that these units are fastened to the hold-down arms.

(4) Determine that all core work is completed and make a final inspection of the core for foreign objects and for any abnormalities.

(5) Determine that the reactor carriage, reactor bridge, and the instrument bridge are locked in position.

b. Checks of Experiment Facilities. - The experiment facilities should be checked to ensure that they are in a safe condition for reactor operation. (These checks should be made while completing Section B of the Startup Check List.)

(1) Determine that all changes to experiments are completed.

(2) Determine that all experiment information sheets are current.

(3) Determine that Experiment Safety-Check Sheets have been completed by instrument engineers for all applicable experiments.

(4) Determine that Special Instruction Sheets for all experiments are complete and current.

c. Startup of Water Systems. - The water systems must be put into operation and checked for proper operation. (These checks

should be made while completing Section D of the Startup Check List.)

(1) Determine that the pool is filled to the proper level and that all pool-level alarms have been cleared.

(2) Determine that the primary cooling system has been filled and vented.

(3) Determine that the flapper valve is in the fully closed position.

(4) Determine that the primary-cooling-system flow is or has been properly established.

(5) Determine that flow through the demineralizer and through the bypass filter is or has been properly established.

(6) Determine that the water purity is adequate.

(7) Determine that the secondary cooling system is filled, treated, and ready for service.

(8) Determine that both the exit water and the decay-tank off-gas activity monitors are operating.

(9) Determine that the skimmer system is in operation.

d. Instrumentation Checks. - These checks should be made while completing Section E of the Startup Check List.)

(1) Determine that local operation has been selected.

(2) Determine that all utility services are in order as specified by the Startup Check List.

(3) Determine that all recorders, amplifiers, etc., are turned on at least one-half hour prior to operation of the reactor.

(4) Determine that the ionization chambers are in their proper locations and at their proper elevations. (Check the log book for any movement during the preceding shutdown.)

(5) Determine that the fission-chamber channel is calibrated and operating properly.

(a) Set the log count-rate meter on CALIBRATE and adjust until the log count-rate recorder indicates 60 counts/sec. Return the log count-rate meter to USE.

(b) Withdraw the fission chamber until the counting rate is observed to decrease. Then insert the fission chamber until the counting rate is observed to increase. Finally, withdraw the fission chamber to its withdraw limit.

(c) While comparing the counting rate of the channel to the posted calibration curve (for response to gamma rays only), vary the pulse height setting (PHS). Determine that the resulting response curve for the channel is essentially the same as that posted; i.e., that the gamma-ray response has not shifted.

(d) Set the PHS and the gain on the log count-rate meter at the posted startup value.

(e) Position the fission chamber to obtain a counting rate >20 but <40 counts/sec.

(6) Determine that the log-N channel is adjusted properly.

(a) Determine that the log-N chamber power-supply meters indicate that the positive voltage and negative

voltage applied to the chamber are within ±10% of the posted values.

(b) Using the built-in "Ground", "Lo Calibrate", and "Hi Calibrate" signals, calibrate the log-N amplifier with the log-N recorder using the "Gnd set", "Calibrate", and "Gain" potentiometers, respectively. Then return the amplifier switch to the GROUND position.

(7) Determine that the servo channel is adjusted properly.

(a) Determine that the servo channel power-supply meters indicate that the positive voltage and negative voltage applied to the chamber are within ±10% of the posted values.

(b) Push the micromicroammeter "zero" button, set the "power range" selector switch on 20 w, and zero the micromicroammeter. Return the range-selector switch to its previous position.

(8) Compare the control-rod magnet currents with the posted "N_L" values and adjust the magnet currents, if necessary, to obtain the proper values. (If the magnet currents for more than two rods differ by more than ±5 ma from the posted values, contact the reactor supervisor.)

(9) Calibrate the level-safety channels (quarterly).

(10) Perform the rod-drive and rod-response test following the repositioning of, or any work on, the drive units (also to be performed quarterly).

(11) Perform the scram checks. (These checks involve raising all control rods about 1 in. and scramming them by the manual button, log-N amplifier period button, and each level-safety Jordan button, in turn. This section of the check list is self-explanatory.)

(12) Set the "power range" switch on the desired range. Then set the servo-demand position for the desired fraction of that range.

(13) Determine that all radiation monitors are operating properly.

(14) Determine that all instrument channels are working properly and the corresponding recorders are tracking.

(15) If the annunciator panels are not clear, the reason for any alarm should be determined and evaluated.

e. Other Checks. - (These checks should be made while completing Section F of the Startup Check List.)

(1) Determine that the public-address system is operating properly.

(2) The supervisor should review the next power level schedule.

(3) An announcement should be made over the public-address system before the reactor startup if requested by experimenters.

(4) Determine that the core-loading chart is up to date and properly approved following any core changes.

(5) Determine that the containment system is in the condition required for reactor startup. (Refer to

Section 7.2d and 10.1 for proper operating conditions of the containment system.)

(6) If the next power level schedules indicate extended periods of high-power operation, the air-conditioning system for the pool area must be functioning properly.

3. Startup in Mode 2 Via Operator Start*

a. Since all checks listed in Section 2.1f.2 must have been satisfactorily completed, certain required conditions should exist; however, these conditions are restated below.

(1) Key switch S1 in the ON position.

(2) Preferred rod selector switch S10 in the desired position; i.e., to select rod 1, 2, or 3.

(3) Raise-clutch mode switch S3 in the RUN position.

(4) Individual "clutch actuate" switches S12-S15 and S22-S23 in the HOLD position.

(5) Remote scram switch S11 in OPERATE and scrams reset by pushing the scram-reset push button, PB-1. (The local scram switch is a push button, PB-2.)

(6) No reverse request exists.

(7) Fission chamber positioned so that the output of the count-rate channel is >2 counts/sec. (If it is desired to operate the fission chamber in the automatic mode, any repositioning will be accomplished automatically.)

---

*Operator start (manual control) is used only when the servo system is not functioning properly.

(8) If the desired operating power level is <400 k2 (20% N_F), omit step 9, below.

(9) If the desired operating power level is >400 kw (20% N_F), the "power range" switch must be on the 2-Mw setting and the servo demand (logarithmic potentiometer) must be at its lower limit (5% N_F).

b. Move the "group-actuate" switch, S4, to the WITHDRAW position and hold the switch in that position. If a 25-sec period is detected by either the count-rate channel or the log-N channel, rod withdrawal is inhibited until the period becomes longer. (Until the log-N channel indicates a power level of 0.01% N_F and log-N confidence is obtained, several additional conditions of the count-rate channel which inhibit rod withdrawal are: the count-rate meter must, of course, be in OPERATE; the counting rate must exceed 2 counts/sec and be less than 8000 counts/sec; and the fission chamber must not be in motion.)

c. During this stage, the proper "power range" switch setting must be selected (even though the servo system is not on) or a reverse will be initiated. The switch should have been set for the desired operating range prior to the startup as required by the Startup Check List. (The other alternative would require the operator to increase the range-switch setting as the power level increases; however, this distraction of the operator is undesirable when the reactor is under manual control.)

d. If the desired operating power level is >400 kw (20% N_F), "run" must be obtained. To obtain "run", the power level (as indicated by the log-N channel) must be >1.5 N_F and <10% N_F, the "power range" switch must be in the 2-Mw setting, the log-N period must be >100 sec, and the servo demand (logarithmic potentiometer) must be at its lower limit (5% N_F) even though the servo system is OFF. If these conditions exist, the run mode is automatically obtained.

e. When the desired power level is obtained, the positions of the shim rods should be adjusted so that rods 1-4 are evenly withdrawn. (Rods 5 and 6 should be evenly withdrawn to the position required to make the heat power equal to the instrument power.)

4. <u>Startup in Mode 2--Via Instrument Start</u>

a. Since all checks listed in Section 2.1f.2 must have been satisfactorily completed, certain required conditions should exist; however, these conditions are restated below:

(1) Key switch S1 in the ON position.

(2) Preferred rod-selector switch S10 in the desired position; i.e., to select rod 1, 2, or 3.

(3) Raise-clutch mode switch S3 in the RUN position.

(4) Individual "clutch-actuate" switches S12-S15 and S22-S23 in the HOLD position.

(5) Remote scram switch S11 in OPERATE and scrams reset by pushing the scram-reset push button, PB-1. (The local scram switch is a push button, PB-2.)

(6) No reverse request exists.

(7) Fission chamber positioned so that the output of the count-rate channel is >20 counts/sec but <40 counts/sec; the fission chamber should be in the automatic mode; i.e., switch S19 should be in the AUTO position.

(8) If the desired operating power level is not >200 kw (10% N_F), omit step 9, below.

(9) If the desired operating level is >200 kw (10% N_F), the "power range" switch must be on the 2-Mw setting and the servo demand (logarithmic potentiometer) must be at its lower limit (5% N_F).

b. Turn the "instrument-start" switch to the ON position; this will initiate the startup sequence. The following events will occur as demanded by the status of the reactor system:

(1) The servo system will be activated.

(2) The rods will be withdrawn continuously. If a 25-sec period is detected by either the count-rate channel or the log-N channel, rod withdrawal is inhibited until the period becomes longer. (Until the log-N channel indicates a power level of 0.01% N_F and log-N confidence is obtained, several additional conditions of the count-rate channel which

inhibit rod withdrawal are: the count-rate meter must, of course, be in OPERATE; the counting rate must exceed 20 counts/sec and be less than 8000 counts/sec; and the fission chamber must be in motion.)

c. When the servo system senses an "insert error", the instrument (controlled) startup will be terminated. The servo will maintain the reactor power level at the level demanded.

d. If the desired power level is >200 kw (10% N_F), "run" must be obtained. "Run" should be obtained as soon as the servo system stabilizes the reactor power at the 100-kw (5% N_F) level; i.e., the required conditions should naturally result from servo-system action. The servo demand (logarithmic potentiometer) may then be increased to the desired level by manipulating the lever-type "demand" switch.

e. When the desired power level is obtained, the positions of the shim rods should be adjusted so that rods 1-4 are evenly withdrawn. (Rods 5 and 6 should be evenly withdrawn to the position required to make the heat power equal to the instrument power.)

5. <u>Startup in Mode 2 Via Operator Start with Servo</u>

a. Since all checks listed in Section 2.1f.2 must have been satisfactorily completed, certain required conditions should exist; however, these conditions are restated below.

(1) Key switch S1 in the ON position.

(2) Preferred rod-selector switch S10 in the desired position; i.e., to select rod 1, 2, or 3.

(3) Raise-clutch mode switch S3 in the RUN position.

(4) Individual "clutch-actuate" switches S12-S15 and S22-S23 in the HOLD position.

(5) Remote scram switch S11 in OPERATE and scrams reset by pushing the scram-reset push button, PB-1. (The local scram switch is a push button, PB-2.)

(6) No reverse request exists.

(7) Fission chamber positioned so that the output of the count-rate channel is >2 counts/sec. (If it is desired to operate the fission chamber in the automatic mode, any repositioning will be accomplished automatically.)

(8) If the desired operating power level is not >200 kw (10% N_F), omit step 9, below.

(9) If the desired operating level is >200 kw (10% N_F), the "power range" switch must be on the 2-Mw setting and the servo demand (logarithmic potentiometer) must be at its lower limit (5% N_F).

b. Turn the "servo" switch, S17, to the ON position and then return it to the HOLD position. The servo system will be energized unless the regulating rod is at either the upper or lower limit of the regulating-rod span.

c. Move the "group-actuate" switch, S4, to the WITHDRAW position and hold the switch in that position. If a 25-sec period is detected by either the count-rate channel

or the log-N channel, rod withdrawal is inhibited until the period becomes longer. (Until the log-N channel indicates a power level of 0.01% N_F and log-N confidence is obtained, several additional conditions of the count-rate channel which inhibit rod withdrawal are: the count-rate meter must, of course, be in OPERATE; the counting rate must exceed 2 counts/sec and be less than 8000 counts/sec; and the fission chamber must not be in motion.)

d. When the servo system senses an "insert error", the servo will maintain the reactor power level at the level demanded.

e. If the desired power level is >200 kw (10% N_F), "run" must be obtained. "Run" should be obtained as soon as the servo system stabilizes the reactor power at the 100-kw (5% N_F) level; i.e., the required conditions should naturally result from servo-system action. The servo demand (logarithmic potentiometer) may then be increased to the desired level by manipulating the lever-type "demand" switch.

f. When the desired power level is obtained, the positions of the shim rods should be adjusted so that rods 1-4 are evenly withdrawn. (Rods 5 and 6 should be evenly withdrawn to the position required to make the heat power equal to the instrument power.)

2.1g. Startup Following a Shutdown Due to the Dropping of One or More Shim Rods

If one or more rods are dropped as a result of either a mechanical failure or a failure in the magnet amplifier, the reactor will drop out of servo control and will be subcritical instantly. The following action should be taken.

1. Inform the shift engineer of the event immediately.
2. Observe the composite amplifiers for "abnormal" lights.
3. Since with this reactor there are usually no xenon problems necessitating an expeditious return to power, it would not usually be necessary to withdraw the rods that had not dropped while the rod drives were retrieving the rods that had dropped.
4. After the rod's magnet and armature engage, check and record the magnet current. The shift engineer may adjust the current if needed but only if the adjustment is within ±5 ma of the posted currents. For greater adjustments, the reactor supervisor must approve the action.
5. If the rod fails to make clutch, or otherwise performs in an abnormal manner, and the condition cannot be corrected easily, shut down the reactor and notify the reactor supervisor of the situation.
6. If operating in the high-power range (i.e., >200 kw) and the power has not sagged below 0.5% N_F, lower the servo demand to 5% and continue as follows: (Note: The demand will be lowered automatically to 5% if the power level sags to <0.5% N_F which takes the reactor out of the "run" mode when operating in the high-power range.)

a. Obtain servo.

b. Raise the rods which dropped.

c. Observe all the power and period recorder readouts as the power level is raised. After servo takes control at 100 kw and "run" has been obtained, raise the demand to the former power level. After the former power level has been reached, re-establish the previous rod positions. If any change is necessary due to an increase in xenon concentration, this change should be made by repositioning rods 1-4 evenly. (NOTE: A qualified supervisor must be present during all reactor startups.)

7. If operating in the low-power range (i.e., at or below 200 kw), do not change the servo demand.

a. Obtain servo.

b. Raise the rods which dropped.

c. Observe all of the power and period recorder readouts as the power level is raised. After servo takes control, re-establish the previous rod positions. If any change is necessary due to an increase in xenon concentration, this change should be made by repositioning rods 1-4 evenly. (NOTE: A qualified supervisor must be present during all reactor startups.)

2.1h. <u>Return to Full Power Following an Electrical Power Outage</u>

1. The loss of electrical power to the BSR complex is a condition which, on occasion, must be tolerated. While the power outage is in effect, the diesel generator located at the ORR (Building 3042) will supply power to the following:

a. All the control circuits and pilot lights.

b. All the process instrumentation.

c. All the recorders.

d. The rod-drive motors and position indicators.

e. The fission chamber drive motor and position indicator.

f. The television monitoring system.

g. The facility radiation and contamination alarm system.

h. The annunciators.

i. "Reactor on" lights.

j. Receptacles on the bridge, in the control-room vertical panels, and in control-room panel H.

k. Building public-address system.

l. Emergency lights in the control room and in the reactor bay.

2. After the TVA power is restored, the following action should be taken:

a. Clear all scram conditions as needed.

b. If the power was off for any significant length of time (more than 30 min), allow a 5-min warm-up time on the safety system instrumentation.

c. Insert the fission chamber as required.

d. Recalibrate the log-N channel.

e. Perform the Jordan button checks on the composite amplifiers.

f. Perform services to experimenters' equipment as requested.

g. If the power failure affected the cooling system, re-establish the flow if applicable.

h. Obtain instrument start and return to power.

i. Ensure that the building cell-ventilation system is in service.

j. Stop the diesel generator operation and return the control-selector switch to AUTOMATIC.

k. Reset the heating and ventilating units as needed.

3. Reiterating, the supervisor in charge must be present for any withdrawal of rods.

2.1i. Priorities in Restarting the ORR and/or BSR

Frequently, the ORR and BSR will be operated simultaneously from the same control room. Generally, when operating the BSR from the remote console in the ORR control room, only one operator will be involved in control-room work, with one shift engineer directly responsible for the operations. (Specific procedures pertaining to remote operation are provided in the ORR operating manual and the BSR operating manual, Section 2.2d.)

On occasion, a situation may arise in which both reactors simultaneously encounter an unscheduled shutdown; e.g., because of an electrical power outage. (Operating history indicates that this occurs about four times each year.) To provide for an orderly recovery from unscheduled shutdowns, it is necessary to list the priorities to be used in restarting the reactors.

When an unscheduled shutdown of both reactors does occur, the following priorities should be exercised in restarting the reactors. However, each facility should be checked to assure that it is in an acceptable shutdown condition before any restart begins.

1. Priority Number One - ORR. - Since the ORR operates at the highest neutron flux, the problem of xenon poisoning is of prime importance. Consequently, following a shutdown the ORR should be restarted as soon as possible, consistent with established operating procedures of the ORR operating manual and sound judgment, but never sacrificing safety to minimize reactor downtime. The BSR should remain in a secured position until the ORR has been returned to power unless individual reactor supervision is available. In the event that the ORR has been poisoned with xenon and requires a refueling, the BSR should be restarted as soon as possible consistent with good operating philosophy and procedures. This should be performed prior to refueling the ORR or concurrent with the refueling if an adequate number of qualified personnel is available.
2. Priority Number Two - BSR. - the BSR should be restarted following the established operating procedures as detailed in Section 2.1 of the BSR operating manual as soon as the ORR has attained full-power operation and conditions are normal.

2.1j. Priorities in Making Operational Decisions

Section 2.1i outlines the standard priorities for deciding which reactor to start up first in case both are scrammed simultaneously by a loss of electrical power. Other circumstances might arise which could cause unusual operation at either of the reactors but still not shut either of them down. For instance, an automatic power setback might occur, a control system might suddenly require constant attention, or radiation alarms might sound from several sources. Unusual occurrences

of this type also require that the operator and the supervisor make a decision about what to do, and sometimes the action to be taken must follow some priority order. Here again, the general priority would be: ORR first, and BSR second.

Furthermore, it should also be kept in mind that either or both of the reactors may be shut down by the operator on his own authority if he feels that too much is going on for him to handle his responsibility properly.

It is possible that special circumstances requiring new priorities might arise. For instance, an experiment at the BSR might be so important to the Laboratory that during the term of the special experiment the BSR would be kept operating or started up after an electrical power outage in preference to the ORR. All likely circumstances usually cannot be anticipated; therefore, it is impossible to predict all of those with a low probability for occurrence.

These are the reasons for having highly trained operators as well as skilled technical people on shift. In emergencies such as these when normal priorities cannot be used, it is expected that the supervisor on duty will use all of the information at hand in deciding what course to take instead of blindly following rules that have been set up for other situations.

2.2. Steady-State Operations

2.2a. Requirements for Continuous Power Operations

1. General Requirements. - The other reactors for which the Operations Division is responsible are normally operated at their full power rating. However, depending upon the requirements of the various experimenters, the power level and duration of operation between shutdowns at the BSR may vary considerably. When the reactor is operating, numerous checks are to be made and pertinent data recorded on a routine schedule. (Examples of the data sheets to be filled out by the console operator are given in Section 12.) Other miscellaneous duties associated with operating the reactor are to be performed by the roving operator. (Examples of the shift check sheets are also given in Section 12.)

   If the power level is to be varied during operation of the reactor, a qualified supervisor and reactor operator must be present in the control room. If the shift engineer plans on temporarily leaving the immediate area, his whereabouts should be made known to the operator to facilitate communication, if necessary.

2. Manning Requirements

   a. Day Shift. - During the 8:00 a.m. to 4:30 p.m. shift, Mondays through Fridays (except for official holidays), the reactor bay will be unlocked and at least one member of the Operations supervisory staff will be present to supervise and coordinate the activities of experimenters,

maintenance personnel, and visitors. The member of supervision should, in general, remain in the reactor bay or in the office area. However, it will sometimes be necessary for him to go to the pump house, to the cooling tower, or to the fuel vault with an operator or with maintenance personnel; he should attempt to keep such absences from his primary station to an absolute minimum. (NOTE: The above requirements are in effect whether or not the reactor is in operation.)

On occasion, it will be desirable to operate the reactor from the local console. During these periods, the operator will remain at the local console and will not leave the control room until properly relieved by a qualified operator.

Except during the times when the reactor is being operated locally, the control room will be locked when a member of Operations supervision is not in the immediate vicinity of the control room. (Other Operations personnel who have been issued the proper key can, of course, enter briefly when necessary.)

b. Off Shifts. - Normally, from 4:30 p.m. to 8:00 a.m. on Mondays through Fridays and during Saturdays, Sundays, and official holidays, the reactor bay and the control room will be locked. (Other Operations personnel who have been issued the proper key can, of course, enter for routine or special checks and jobs.) If experiment or

maintenance personnel must enter the reactor bay during "off shifts", they must contact the Operations shift engineer and request admittance. During the time the experimenter has access to the reactor bay, he should contact the shift engineer hourly and inform the latter of his status. If the experiment or maintenance personnel must work over the pool (e.g., on the instrument bridge) they are instructed by signs to contact the shift engineer, the latter should determine whether he should furnish supervision or assistance and make arrangements accordingly. At no time will any individual be allowed to work over the pool without the presence of another person in the reactor bay. (NOTE: The above requirements are in effect whether or not the reactor is in operation.)

It will occasionally be desirable to operate the reactor from the local console during off shifts. During those periods the operator will remain at the local console and will not leave the control room until properly relieved by a qualified operator.

3. Minimum safety and control instrumentation required during power operation in mode 1:

   a. Flapper-valve position indicator.

   b. Two level-safety channels.

   c. One operating radiation-detection monitor which provides information on radioactivity in the reactor cooling system.

d. One instrument, located in the reactor room, which is capable of activating the building containment system when a radiation level of $\geq$150 mr/hr occurs.

4. Minimum safety and control instrumentation required during power operation in Mode 2:

a. Flapper-valve position indicator.

b. Two level-safety channels.

c. One ΔT channel.

d. One core ΔP channel.

e. One primary-coolant flow channel.

f. One operating radiation-detection monitor associated with the reactor cooling system.

g. One instrument located in the reactor room which is capable of activating the building containment system when a radiation level of $\geq$150 mr/hr occurs.

2.2b. Heat-Power Calculations

The primary standard for the power level of the reactor is the calculated heat power. These calculations are based on the heat gain in the primary-water system during Mode-2 operation and are computed as follows:

$$\underset{(kw)}{\text{Power}} = \underset{(°F)}{\Delta T} \times \underset{(gpm)}{\text{flow rate}} \times \frac{0.1448}{\frac{kw}{gpm - °F}}$$

This heat power is calculated and recorded three times per shift and, as listed, is actually the accumulated energy for one hour of operation (see Example 12.2.2). To compute the total energy for the shift, assuming no variations in power level, the three calculated values should be averaged and the average multiplied by eight.

If the power level is varied between the times calculations are made, the accumulated energy will have to be corrected as illustrated in the following example:

From 2:40 to 3:10 p.m. the reactor power was varied; preceding and following this interim, the power level was 1500 kw (actually 1530 by heat balance preceding the shutdown and 1510 kw after start-up).

Assume that:

The accumulated energy from 2:00 to 3:00 p.m. was 1068 kwh (based on instrument power).

The accumulated energy from 3:00 to 4:00 p.m. was 1300 kwh (based on instrument power).

Since: corrected energy, kwh = accumulated energy based on instrument power x $\frac{\text{actual heat power}}{\text{instrument heat power}}$,

Then: kwh for the seventh hour = 1068 x $\frac{1530^*}{1500}$ (energy accumulated between the hours of 2:00 and 3:00 p.m., column 7);

kwh for eight hours = 1300 x $\frac{1510^{**}}{1500}$ (energy accumulated between the hours of 3:00 and 4:00 p.m., column 8).

Also: to calculate the accumulated energy for the first six hours, the remaining two routinely calculated values should be averaged and the average multiplied by six.

To ensure comparability between the daily summaries of instrument and heat energies, it is advantageous, during periods of varied-power-level operation, to record the corrected heat energies in the hourly comumns when

*In this case, the actual heat power calculated preceding the shutdown should be used.

**In this case, the actual heat power obtained after returning to power (and after the reactor has reached equilibrium) should be used.

applicable. This will facilitate summing the energy generated during the shift since simple averaging would not be applicable for periods of varied-power-level operation.

One of the primary uses for the data described in this section is in the computation of fuel consumption. At present, 100 kw (and above) is to be considered as an accountable power level. However if the reactor is to be operated at a lower power level for an extended period of time, the power should be accounted for if it is expected that more than 100 kwh will be accumulated. (It should be noted that any period of time when the reactor is at a power level of 100 kw or greater is to be reported as "operating time"; this is consistent with the policy at the other reactors. In addition, if the reactor is at a lower power level but is providing a planned and useful irradiation of an experiment or a sample, the period involved is to be reported as "operating time".)

During Mode-1 operation, there is no flow and ΔT; consequently, the power level and energy data are based solely on instrument values if accountability is applicable. To complete any data sheet which requires heat-power information, record the instrument power and "Mode 1".

2.2c. Shim-Rod Positions

It is desirable to keep rods 1-4 evenly withdrawn. (Rods 5 and 6 should be evenly withdrawn to the position required to make the heat power equal to the instrument power.) Twice each shift, rods 1 through 4 should be balanced at the local console by an operator. Rods 5 and 6 should not be repositioned unless the shift engineer determines that repositioning is required to make the heat power equal the instrument power.

2.2d. Remote Control of the BSR - Operating Procedures

1. Introduction. - The BSR remote-control instrumentation (see Section 3.4) allows the operator at this console to do the following:

   a. Initiate an evacuation signal, silence the evacuation horn, and initiate building containment (using the red, green, and black buttons, respectively, in the upper left corner.)

   b. Observe if a rod is seated (using the two square indicator-light panels marked "1, 2, 3, 4, 5, and 6" in the upper right corner.)

   c. Observe when an annunciator alarms. (An audible alarm will sound. In addition, panel lights indicate whether the annunciator is located in the nuclear group or in the process group.)

   d. Observe if there is an increase in the radiation level (using two meters near the upper left corner: the left meter indicates the output of the 12 r/hr monitor; the right meter indicates the output of the high-bay Monitron).

   e. Observe the status of the reactor in regard to the key-switch position and to the remote-or-local control mode selection (using the "reactor on" and the BSR or ORR indicator lights).

   f. Scram the reactor (using red-colored switch). This control is effective when in either local or remote operation.

   g. Raise and lower the demand potentiometer.

   h. Insert and (within limits) withdraw the preferred rod.

i. Acknowledge and reset annunciator alarms.

j. Observe the power level as monitored by the No. 1 level-safety channel (using the left meter at the center of the console).

k. Operate the control-room television cameras.

l. Monitor the control room for abnormal sounds (using the surveillance microphone system).

2. Procedure for Transferring to Remote Operation. - After the BSR is started up and all the necessary checks are made, the reactor may be operated remotely from the remote console located in Building 3042. The procedure for transferring control of the reactor is as follows:

a. Have the remote operator verify proper audio and video communication. (If neither control room television camera is operable, the reactor should not be operated remotely.)

b. Turn the control-selector switch on the BSR control panel clockwise until the "remote" light comes on at the local console; the "ORR" light, located on the remote panel, should also come on.

c. Simulate an alarm condition for the remote operator to observe, acknowledge, and reset; verify that the remote operator can reposition the preferred rod.

d. Inform the remote operator of any pertinent information; then tell him to assume the responsibility for operating the BSR.

e. Request all individuals in the local BSR control room to leave; then lock all doors to the control room. (NOTE: if

it is necessary for any Reactor Operations Department personnel to remain in the control room, they should receive permission from the supervisor in charge.)

3. Procedure for Remote Operation.

a. Routine Operation at Equilibrium Conditions. - At a minimum, routine surveys using the control room TV will be made on an hourly basis by scanning the instrument panels to observe for possible trends in the equilibrium of the system. (The surveillance microphone system will be used to listen for any abnormal sounds in the local control room.) Any indication of abnormal conditions will be investigated immediately by making detailed close-range readings; and, if further action is needed, supervision will be contacted immediately.

b. Data Collection. - Once per hour the readout of the three level-safety channels, the ΔT recorder, and the flow recorder should be recorded. At least three times per shift, the positions of the shim rods, the inlet temperature, the outlet temperature, the exit-water radioactivity, and the log-N channel output should be recorded; in addition, a heat balance should be calculated.

c. Power Level Adjustments. - Minor adjustments in power level are permitted using the remote logarithmic potentiometer to compensate for minor variations caused by temperature, change in rod position, etc. These adjustments are to be made only during the close-range observations of the safety

recorders and only after the regulating rod is in the proper range (10-90%) with respect to the regulating-rod limit switches.

d. Regulating-Rod Position Adjustments. - It will be necessary from time to time to reposition the preferred rod to maintain the regulating-rod limit within the desired range (10-90%) with respect to the limit switches. This is accomplished while viewing the log-N recorder at close range with the TV and then moving the preferred rod a small increment.* Following each movement of the preferred rod, a scan of the appropriate instruments should be made to assure that the system is still in equilibrium. This procedure should be repeated until the desired reading on the regulating-rod recorder is obtained.

e. Annunciator Station. - Should an annunciator be actuated, the operator should immediately look at the remote console indicator lights (to determine if the actuated annunciator is in the nuclear group or in the process group). Then he should scan the local annunacitor stations with the TV to identify the individual annunciator before acknowledging it. If corrective action cannot be taken from the remote controls, the supervisor should be notified immediately. The supervisor will investigate and take corrective action. (If the shift engineer cannot be

*The remote meter for the No. 1 safety channel should also be observed.

located immediately, the operator has authority to scram the reactor if he decides it is necessary.)

f. Emergency Actions

(1) TV Failure. - If a failure should occur in both of the control room TV systems, the reactor should be scrammed immediately. The shift engineer should be informed of this action immediately so that further action can be taken. Operation of the BSR may be resumed with personnel at the local controls until the TV system has been repaired and declared reliable.

(2) Servo Failure

(a) If the "servo off" annunciator alarms, the reactor is no longer being controlled by the servo system. The operator should render the reactor subcritical by inserting the preferred rod to its seat position. Unless an operator can then be dispatched to the local control room immediately, the reactor should be scrammed. If an operator can be stationed at the local control room, operation may be resumed with the reactor in manual control. (Of course, the shift supervisor must be present until the operating power level is re-established.)

(b) If the remote operator's observations lead him to believe that the servo system is improperly controlling the reactor, he should immediately scram the reactor and notify the shift engineer.

(3) Evacuation Alarms. - If the building-evacuation-alarm system is actuated by the instruments, the following action should be taken:

(a) Scram the reator.

(b) Check the following instruments to aid in evaluating conditions:

1) The two radiation-indicating meters (on the remote console).

2) The local facility radiation and contamination alarm system at the local control room should be scanned with the control-room television system.

3) The miscellaneous radiation recorder at the local control room should be scanned with the control-room television system.

(c) The shift engineer will direct activities as prescribed by the emergency procedures for the Reactor Operations Department (Section 10.6).

2.3. Shutdowns

2.3a. Shutting Down the Reactor

The reactor will usually be shut down at some time specified by an experimenter as a requirement for his particular test. The reactor is usually shut down by scramming with the scram button on the local console. Following the termination of any particular run, the following action should be taken if the reactor is to remain down for the remainder of the shift.

1. Be sure that all six seat lights are on.
2. Lower the demand to the lower limit.
3. Place the range-selector switch on the lowest value practical without having the servo recorder indicator drive full scale.
4. Place the log-N amplifier mode knob on GROUND.
5. De-energize the secondary system as follows:
   a. Fans in OFF.
   b. Pump in OFF.
   c. Blow-down valves closed.
   d. Acid-addition system OFF.
   e. Chemical addition system OFF.
   f. Bypass valve on riser to basin OPEN.
   g. Air-conditioning pump operating.
6. De-energize the primary pump motor.
7. Close valve HCV-9 and open valve HCV-3 to continue demineralizer operation while the primary flow is off.
8. Flapper valve OPEN.
9. Insert the fission chamber to give about 20 counts/sec; leave the chamber drive in the AUTOMATIC mode.

10. Place the key switch in OFF, remove the key, and place the key in the lock-box located in the control room.

11. Place the RIM-5 and the RIM-18 micromicroammeter switches in the "10^{-11}" position.

12. Inform the ORR console operator of the status of the reactor (have him verify proper audio and video communication if applicable).

2.3b. Refueling Shutdowns

Although the number of shutdowns required for refueling the BSR will be relatively negligible, there will be occasions when decreases of excess reactivity will require some fuel changes.

All work to be performed during the shutdown should be governed by Section 4.

2.3c. Unscheduled Shutdowns

When an unscheduled shutdown occurs, the shift engineer or his designated representative should report immediately to the local control room. If there are no unexplained abnormalities, the reactor should be restarted.

2.3d. Radiation Control Measures During Shutdowns

The radiation control measures during shutdown of the reactor vary according to the nature of the shutdown. If water is to be drained from any part of the primary-water system for possible removal of components or any other maintenance work, a health physicist should be requested to monitor the area to determine if a Radiation Work Permit (RWP) might be required and to be sure that no areas are contaminated by the primary water. (See Section 6.1g. for procedures and requirements for draining the primary-water system and Section 9 for safety procedures.)

If the water is to be drained from a part or all of the reactor pool, all radioactive materials should be removed or isolated prior to the draining. After the pool or the portion of the pool has been drained, entry to the pool is subject to "contamination zone" and "radiation zone" regulations. These regulations are as follows:

1. The pool and associated area must be established as a contamination zone.
2. A valid "Radiation Work Permit" must be on hand.
3. Personnel entering the pool should have on two pairs of C-zone clothing and carry two pencil meters, one direct-reading pocket dosimeter, and a film badge.
4. Upon leaving the pool, each person shall be checked for contamination, and his radiation-exposure record shall be brought up to date by a reactor operator.
5. If an in-pool Monitron is required, it should be checked occasionally during each shift for proper operation.

It is the responsibility of the shift engineer to ensure that all regulations are followed.

2.3e. Reporting Shutdowns

Each shutdown should be reported in the log book regardless of the number of shutdowns that occur. (See Section 2.2b for the definitions of "operating time" and of "shutdown time".)

Following any unscheduled shutdown, a detailed description of the shutdown should be prepared in writing and submitted to the reactor supervisor by the shift supervisor in charge. Such reports will not only aid in preventive maintenance but will also aid in the determination of the source of trouble, thus preventing future unscheduled shutdowns.

If the shutdown was the result of equipment failure, the shift engineer should report whether the failure was due to a mechanical or an instrument failure. (At times it is difficult to distinguish between instrument and mechanical failures; the shift engineer should use his best estimate in making his report.)

2.4. Annunciator Procedures

2.4a. Introduction

In general, annunciator alarms indicate abnormal conditions in the process or nuclear systems. Their purpose is to alert the operator to the abnormal conditions so that appropriate action may be taken.

2.4b. Description

An annunciator station consists of a signal can which is mounted behind two translucent panels called station sections. One section is red and the other is white. All stations are connected to the alarm horn. When one of the reactor's monitored parameters exceeds a predetermined setpoint, both sections will be lighted and the horn will sound.

Located on the BSR console is a toggle-type electrical switch. When the switch is pushed to the left, the alarm is acknowledged (white section is darkened) and the horn is silenced. The red section will remain lighted until the condition becomes normal; when the condition becomes normal, the red section will darken and the white section will be lighted. The annunciator may then be reset by pushing the switch to the right; the white section will then darken. (When operating in the remote mode, the acknowledge-reset switch, located near the lower right corner of the remote console, also functions as described above.)

2.4c. Operator Response

In the event of any alarm, the operator is to:

1. Identify the affected annunciator.
2. Acknowledge the alarm.
3. Make preliminary observations to help determine the reason for the alarm and to see if any additional abnormalities result.

4. Notify the supervisor of the status unless instructed otherwise.

5. Do not attempt to withdraw rods to correct for automatic reductions in the power level unless the supervisor in charge is present.

2.4d. Annunciators--Parameters, Setpoints, and Suggested Actions

In this section the suggested course of action to be taken following each of the various alarms is detailed. In addition, whenever the power level of the reactor is lowered automatically or manually, the condition requiring the action should be investigated, understood, and corrected before attempting to re-establish the initial reactor power level. The supervisor in charge must be present whenever the reactor is made critical or the power level is to be increased.

It should also be realized that a failure in the annunciator can itself will also initiate an alarm. If this is suspected, remove the malfunctioning unit and replace it with a spare unit. Although malfunctioning instrumentation should always be suspected, the preliminary investigation of any annunciator alarm should be motivated by the assumption that the alarm was due to a real cause.

1. Nuclear Annunciators, Right Panel. - One of three annunciator groups is located on control-room panel C and appears as indicated in Figure 2.4.1.

   a. Log-N Reverse (C-1). - This annunciator alarms if the power level, as indicated by the log-N recorder, is 50% higher than the power level indicated on the power-range switch. The setpoints for the five recorder switches that actuate this alarm are at 30 w (0.0015% N_F), 300 w (0.015% N_F),

C-1 Log-N Reverse	C-2 Two Safety Troubles	C-3 Safety Trouble	C-4 20% N_F Not in Run	C-5 Exp. No. 1	C-6 Exp. No. 2	C-7 Exp. No. 3
C-8 Shim Request	C-9 Servo Off	C-10 XXXX	C-11 Recorder Power Off	C-12 Fut. No. 4	C-13 Fut. No. 5	C-14 Fut. No. 6

Figure 2.4.1. Annunciator Right Panel

3 kw (0.15% N_F), 30 kw (1.5% N_F), and 300 kw (15% N_F). This alarm will not be initiated if a negative period of 100 sec or faster occurs within 1.5 sec. This alarm is most likely to occur during a startup via operator start (i.e., without use of the servo system) when the range-selector switch could inadvertently be set on the improper range. Primarily, however, the log-N reverse circuit is provided to limit the results of a failure of the servo system when the reactor is being operated in one of the lower power ranges. Normally, an alarm on this annunciator will occur simultaneously with an alarm on the reverse annunciator and with an actual reverse. This reverse will continue intermittently until the log-N setpoint is no longer exceeded. (Each time reverse action has produced a negative period of 100 sec or faster reverse will be temporarily inhibited.)

If this alarm occurs at any time when the reactor is supposed to be under servo control, the condition of the

servo channel and its associated control circuits should be investigated before the reactor is subsequently operated under servo control.

b. Two Safety Troubles (C-2). - This annunciator alarms if two level-safety channels are malfunctioning simultaneously. Since this type difficulty will initiate a reverse, no efforts to resume operating the reactor should be made. In fact, if the reverse is not initiated automatically, it should be performed manually.

The operator should observe the nature of the safety trouble, if possible, and report, to the supervisor in charge, which "abnormal" lights were lighted on the composite amplifiers. Instrumentation and Controls Division personnel should ensure that two properly functioning level-safety channels are available before starting up the reactor.

c. Safety Trouble (C-3). - This annunciator alarms if there is any malfunction of a level-safety channel or of the period-safety channel.

The operator should observe which safety channel initiated the alarm and what effect it had on the reactor. If the remaining two safety channels are operating satisfactorily, the safety initiating the alarm may be disconnected from the sigma bus by the supervisor in charge. NOTE: The electrical power to the recorder should be turned off before disconnecting the wiring to the sigma bus. (The safety trouble annunciator will remain in this

alarm condition. In addition, if the failure was that of a level-safety channel, failure of a second level-safety will cause a reactor shutdown. However, if the initial failure was that of the log-N channel, no attempt to restart the reactor should be made following any subsequent power reduction.)

d. 20% N_F - Not in Run (C-4). - This annunciator alarms when the reactor power level is 400 kw or greater (as determined by the log-N recorder) and if the conditions for "run" have not been satisfied during a startup or if the power-level selector switch position was changed from the 2-Mw setting after having attained "run" and after the power level was greater than 400 kw.

Since this condition would initiate a reverse, the power level will automatically be lowered to clear the abnormal condition. To prevent this condition from recurring, the conditions for obtaining "run" must be satisfied on the next attempt at increasing the power level. These conditions are as follows:

(1) Power-level selector switch on 2 Mw.

(2) Demand at 5%.

(3) Positive period greater than 100 sec.

(4) The log-N recorder indicates >1.5% N_F and <10% N_F.

(5) Either the servo system must not detect a withdraw error or the reactor must not be under servo control. (Remember, a reverse results in the loss of servo control.)

e. Experiment No. 1 (C-5). - See item g, below.

f. Experiment No. 2 (C-6). - See item g, below.

g. Experiment No. 3 (C-7). - This annunciator will alarm if the E-panel switch for the particular experiment is in the NORMAL position when one of the setpoints for the experiment is exceeded. In addition, this annunciator will be in an alarm condition if the E-panel switch is in the TEST or DISCONNECT position.

If the E-panel switch is in the NORMAL position, a setback, reverse, or scram may accompany this annunciator alarm. Check the experiment instrumentation readout, refer to the experiment information clipboard for the status of the experiment, and contact the experimenter for instructions, if required. NOTE: The experiment control room must be manned if an alarm condition exists while the E-panel switch is in the NORMAL position.

h. Shim Request (C-8). - This annunciator alarms whenever the regulating rod upper-limit switch is actuated while the reactor is in servo. This alarm is bypassed if the reactor is in the instrument-start request mode or in the instrument-start mode; the alarm is also bypassed whenever the servo demand (logarithmic potentiometer) is being raised.

As fuel is consumdd, the regulating rod (No. 4) will be withdrawn by the servo system. During normal operation, if the regulating rod is not made to insert with respect

to the limit switches occasionally, the regulating rod will actuate its upper-limit switch and automatic withdrawal of the regulating rod will be inhibited. As a result, the reactor will soon become subcritical and the power will sag. From the remote console, the regulating rod may be made to insert only by withdrawing the preferred rod; from the local console, this may be achieved by withdrawing any other control rod or by withdrawing the limit switches with respect to the regulating rod.

During normal operation an operator should balance rods 1-4 from the local console at least twice per shift and reposition the limit switches with respect to the regulating rod. (If the regulating rod has been continuously inserting, it should be repositioned further out with respect to the limit switches than the midscale position and vice versa. The portion of the span of the regulating rod recorder which should be used is 10-90%.)

i. Servo Off (C-9). - This annunciator alarms if the reactor is being operated remotely and if the reactor is no longer under control of the servo system. The operator at the remote console should render the reactor subcritical by inserting the preferred rod to its seat position. The BSR should not be operated remotely in manual control (see Section 2.2d).

j. Annunciator (C-10). - This annunciator is presently not in use.

k. Recorder Power Off (C-11). - This annunciator alarms if electrical power is turned off to any one of the following recorders: No. 1, 2, or 3 safety level, log-N, log-N period, count rate, count-rate period, regulating rod position, and servo.

The operator should try to determine which recorder initiated the alarm; at the same time, the supervisor should be notified. If one of the recorders had been turned off, it should be turned on. (NOTE: If the regulating rod recorder has failed and cannot be turned on, the status of the reactor should be considered to be the same as if the servo system has failed.) It should be realized that a failure of another recorder would not be known, since the annunciator would already be in the alarm condition.

l. Future No. 4 (C-12). - This annunciator will be used for a future experiment tie-in.

m. Future No. 5 (C-13). - This annunciator will be used for a future experiment tie-in.

n. Future No. 6 (C-14). - This annunciator will be used for a future experiment tie-in.

2. Nuclear Annunciator, Left Panel. - The second group of annunciators is located on control-room panel D and appears as indicated in Figure 2.4.2.

D-1 Flapper	D-2 Low ΔP	D-3 RS&C System	D-4 Monitron High Level	D-5 Log-N Period <7 sec	D-6 Setback	D-7 Slow Scram
D-8 Pool Level Low	D-9 Low Flow	D-10 Jet Off	D-11 Midrange Lockout	D-12 C.R. Period <7 sec	D-13 Reverse	D-14 Fast Scram

Figure 2.4.2. Annunciator Panels

a. Flapper (D-1). - This annunciator alarms if the flapper valve is not fully open or fully closed.

The alarm occurs routinely when the flapper valve is repositioned to change from one mode of operation to the other. (This repositioning is performed only when the reactor is shut down and only under the direction of supervision.) If the alarm cannot be cleared, return the flapper valve to an intermediate position, then return it to the desired position; it may not have seated properly on the first attempt.

If the alarm occurs during normal operation, the reactor should scram. If the reactor does not scram while operating in Mode 2, observe the ΔP readout and the console indicator "flapper open" or "flapper closed" lights; the annunciator can may have malfunctioned. If the reactor did not scram while operating in Mode 1, observe the console indicator lights and then scram the reactor.

b. Low ΔP (D-2). - This annunciator alarms when the differential pressure across the core decreases to 5.0 in. H_2O while the flapper is closed. (Normally, this differential pressure is 8 in. H_2O when the flow rate is 1100 gpm.)

Observe the flow-rate recorder and the core ΔP recorder to determine if a leak may have developed in the in-pool piping. (If this alarm condition cannot be cleared when establishing flow, check the status of the swivel joint. This joint, which is located at the east wall of the pool, may be loose. The flapper valve should be visually inspected to be sure that it is completely closed.)

c. RS&C System (D-3). - This annunciator alarms if there is an alarm initiated by one of the radiation monitors (Monitrons) or continuous air monitors (CAM's) in the facility radiation and contamination alarm system. The caution alarms occur at 7.5 mr/hr (on Monitrons) and 1000 counts/min (on CAM's); the high level alarms occur at 23 mr/hr (on Monitrons) and 4000 counts/min (on CAM's); and the inoperative alarms occur upon failure of a unit or its electrical power supply.

The operator should observe the facility radiation and contamination alarm system control panel to see which unit initiated the alarm and any other pertinent information.

If two Monitrons or two continuous air monitors initiate a high-level alarm simultaneously, the gas-operated

evacuation horn will be automatically energized. If this occurs, the reactor should be scrammed and there should be an immediate evacuation of personnel from the building as instructed in Section 10.6.

d. Monitron High Level (D-4). - This annunciator alarms if the radiation level increases as indicated at any one of the following monitoring units:

(1) 12 r/hr at the radiation monitor outside the control room (east wall).

(2) 125 mr/hr at the high-bay radiation monitor.

(3) 50 mr/hr at the exit-duct radiation monitor (located in the cell-ventilation duct at the south end of Building 3010).

The operator should notify the supervisor in charge immediately. If the radiation levels are corroborated by more than one instrument, evacuation procedures should be initiated.

e. Log-N Period <7 Seconds (D-5). - This annunciator alarms if the reactor period, as indicated by the log-N period recorder, decreases to 7 sec. (This alarm should be accompanied by a reverse and a subsequent loss of servo control.) The reactor supervisor should be notified.

If the count-rate channel corroborated a positive 7-sec period, it would appear that there was an unexplained addition of positive reactivity to the core. However, if the log-N channel is unreliable and causes momentary

upscale spikes on the recorder, do not proceed with any startup which may be in progress. Shut down the reactor and notify the reactor supervisor and Instrumentation and Controls Division personnel of the status.

f. Setback (D-6). - This annunciator alarms when any of the following conditions occur:

(1) Any experiment setback setpoint is exceeded and the particular E-panel switch is in the NORMAL position.

(2) The ΔT increases to 17°F.

(3) The flapper valve is open and any of the level-safety channels detect an increase in power level to 1.1 Mw (55% N_F).

(4) Any of the level-safety channels detect an increase in power level to 2.2 Mw (110% N_F).

(5) "Run" mode has not been attained or has been lost and the power-selector knob on the micromicroammeter is on the 2-Mw setting.

During a normal reactor startup, this annunciator will be in the alarm condition if the 2-Mw power range is selected. When the power level reaches 100 kw (5% demand of 2000 kw), the servo system should take control. At this time, "run" should be obtained and the annunciator will clear. (Following a setback, no attempt at raising the demand should be made until the supervisor has arrived and evaluated the condition.)

g. Slow Scram (D-7). - This annunciator alarms if any one of the following conditions occurs:

(1) The console key is turned to the OFF position.

(2) One of the manual scram switches is actuated (one at the local console, one at the remote console, and seven throughout the building). See Figure 2.4.3 for the location of the seven located throughout the building.

(3) The flapper valve is neither fully open nor fully closed.

(4) The raise-clutch switch is in RAISE.

(5) An experiment scram setpoint is exceeded while the E-panel switch is in NORMAL.

(6) The flapper is closed and the flow rate decreases to 750 gpm or the core ΔP decreases to 3.8 in. H_2O.

(7) The pool water level decreases 4 ft below the normal operating level.

After the condition initiating the alarm is corrected, the reactor may be returned to the operating power level under the supervision of the shift engineer.

h. Pool Level Low (D-8). - This annunciator alarms when the pool water level is lowered 2 ft. (The normal operating level is at the 830-ft elevation.) The reactor will be scrammed if the water level decreases an additional 2 ft (to 4 ft below the normal level).

If the alarm occurs during reactor operation, the pool level should be checked visually. In addition, the

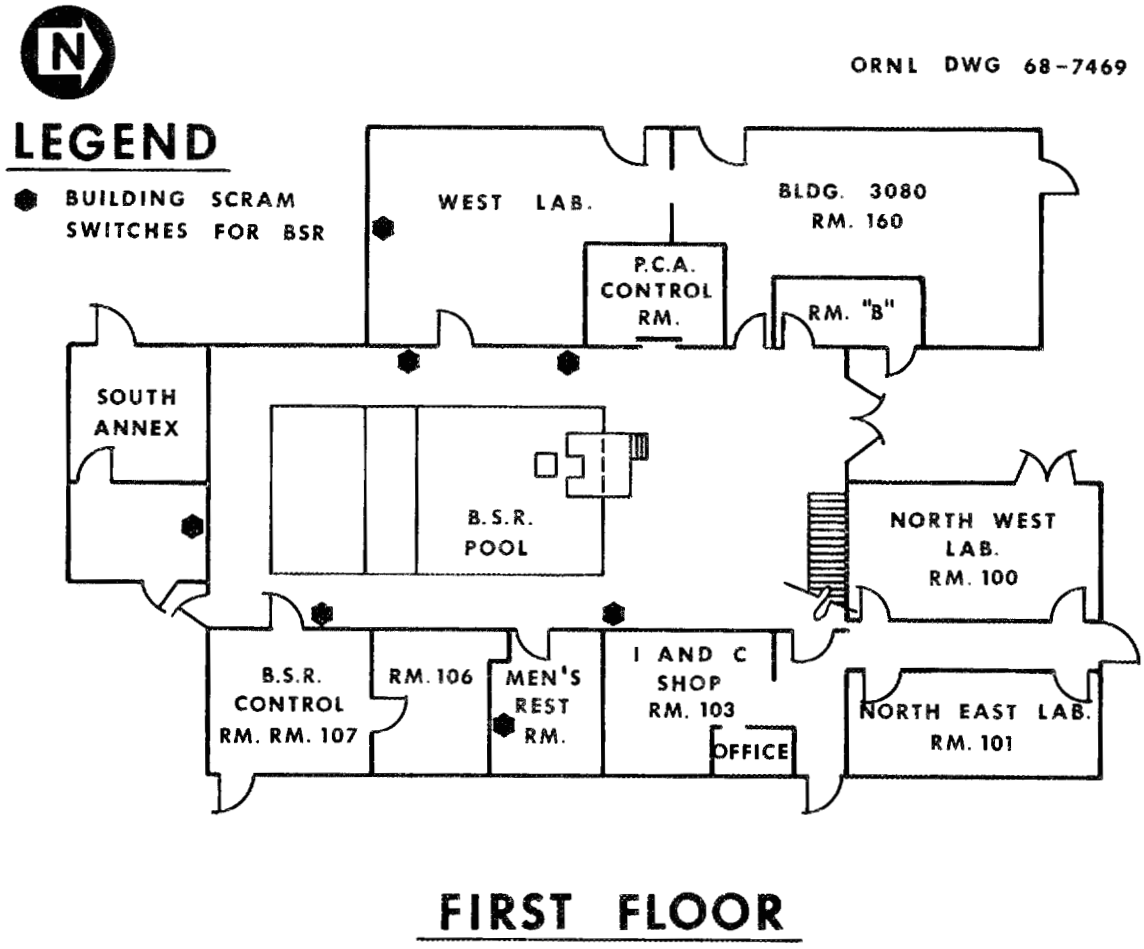

Fig. 2.4.3. Location of Seven Remote Scram Switches on First Floor of BSF, Building 3010

flow rate, ΔP, decay-tank level, and field area should be checked. If a leak has developed, the reactor should be shut down. Any time an alarm occurs, the operating crew should follow applicable radiation precautions.

i. Low Flow (D-9). - This annunciator alarms when the primary flow rate is 850 gpm or less while the flapper valve is closed (the alarm is not actuated if the valve is open).

If the ΔP and ΔT instrument readouts have not changed from their initial equilibrium values, a malfunction of the flow-metering instrumentation may be expected. If the flow has actually decreased during normal operation, the possible causes might be:

(1) Failure of the primary pump.

(2) An obstruction atop the core.

(3) A rupture in the primary water line.

(4) HCV-3 (a hand-controlled, air-operated valve on the exit water line) could have failed.

If the flow rate continues to decrease, the reactor will be scrammed automatically at 750 gpm. Under any circumstances, it would not be advisable to continue operating the reactor in Mode 2 with this annunciator in the alarm condition.

j. Jet Off (D-10). - This annunciator alarms when the ^{16}N dispersion jets are not in service while the flapper valve is open. If this annunciator alarms during normal operation, the most likely cause would be due to shutdown of

the skimmer pump which supplies water to the jets. This pump should be restarted if operations above 100 kw are to continue.

k. Midrange Lockout (D-11). - This annunciator alarms during reactor startup when the counting rate, as indicated on the count-rate recorder, becomes greater than 8000 counts/sec before log-N confidence has been attained at 0.01% N_F on the log-N recorder. This alarm is normal during startups and will clear when the above conditions are satisfied.

l. Count-Rate Period <7 Sec (D-12). - This annunciator will alarm when the reactor period, as indicated by the count-rate-period recorder readout, decreases to 7 sec. If the power level is less than 20% N_F (400 kw), this alarm will be accompanied by a reverse and a subsequent loss of servo control.

The reactor supervisor should be notified of the situation if the log-N channel corroborated a positive 7-sec period. It would appear that there was an unexplained addition of positive reactivity to the core. If the count-rate channel is determined to be unreliable, do not proceed with a startup unless log-N confidence has been obtained.

m. Reverse (D-13). - This annunciator alarms if any of the following conditions develop:

(1) The power level, as indicated on the log-N recorder, is 50% higher than the power-level-range setting on the micromicroammeter and if a negative period of 100 sec or faster does not occur within 1.5 sec. The log-N recorder setpoints are at 30 w (0.0015% N_F), 300 w (0.015% N_F), 3 kw (0.15% N_F), 30 kw (1.5% N_F), and 300 kw (15% N_F).

(2) An experiment reverse setpoint is exceeded while the E-panel switch is in NORMAL and if a negative period of 100 sec or faster does not occur within 4 sec.

(3) Two level-safety channels are simultaneously inoperable.

(4) The reactor period, as indicated on the log-N period recorder, decreases to 7 sec.

(5) The reactor period, as indicated on the count-rate period recorder, decreases to 7 sec while the reactor power level is below 20% N_F (400 kw) or while the fission chamber is not being inserted.

(6) If the power level, as indicated on any of the three safety recorders, increases to 1.2 Mw (60% N_F) while the flapper valve is open.

(7) If the power level, as indicated on any of the three safety recorders, increases to 2.4 Mw (120% N_F).

(8) If the power level, as indicated on the log-N recorder, is >20% N_F with the power range switch on the 2-Mw setting and if "run" has not been obtained.

Whenever a reverse is initiated, the cause should be determined, understood, and corrected before attempting to start up the reactor.

n. Fast Scram (D-14). - This annunciator alarms if a fast scram is initiated by any of the three level-safety channels (when the power level is 135% N_F) or by the log-N channel (when the reactor is on a positive 1-sec period.) The composite amplifiers should be observed to note any "abnormal" lights. If there was only a malfunction in one of the safety channels and not a real increase in power, turn the affected safety recorder off and disconnect that channel from the sigma bus. (NOTE: Failure of a second level-safety channel will initiate a reverse.)

3. Process Annunciators. - The third group of annunciators is located on control-room panel G and appears as indicated in Figure 2.4.4.

G-1 Sec Coolant pH Hi	G-2 Tower Basin Lo Temp	G-3 Tower Basin Hi Temp	G-4 XXX	G-5 Decay Tank Hi/Lo Level	G-6 Decay Tank Hi Radiation	G-7 PCA Room Hi Temp
G-8 Resistivity	G-9 XXX	G-10 Secondary Coolant Lo Flow	G-11 Primary Inlet Hi Temp	G-12 Pool Outlet Hi Radiation	G-13 Reactor Core Hi ΔT	G-14

Figure 2.4.4. Annunciator Panel

a. Secondary Coolant pH Hi (G-1). - This annunciator alarms if the pH of the secondary water increases to 8.2. (The pH probe is located at the secondary tower sump just north of the air-conditioning pump.)

If this annunciator alarms, it would indicate that the acid supply to the tower basin should be increased. (This condition should be verified using the bench instrument.) If this condition is proved to be true, the acid-addition system should be checked; also, check the acid supply (by visual inspection of the supply tank).

b. Tower Basin Lo Temp (G-2). - This annunciator alarms when the temperature of the water in the tower basin decreases to 65°F. This alarm may occur frequently during the winter months if the reactor is not operated continuously.

c. Tower Basin Hi Temp (G-3). - This annunciator alarms if the temperature of the water in the tower basin increases to 89°F. This alarm may be initiated if the reactor is operating and the fans fail to operate as designed. In this event, the condition of the local electrical breakers and control switches should be checked. If resetting the control breakers and switches fails to correct the condition, notify the shift electrician. In all probability, the condition can be corrected before it would be necessary to cool the basin water by other means (for example, by replacing the process water.)

d. Annunciator (G-4). - This annunciator is presently not in use.

e. Decay Tank Hi/Lo Level (G-5). - This annunciator alarms if the water level in the decay tank increases to 160 in. or decreases to 80 in. This alarm will exist before the primary flow is established. (To lower the water level in the tank, lower the flow rate entering the decay tank by closing valve HCV-3. To raise the water level in the tank, increase the flow rate to the tank by opening valve HCV-3; HCV-3 is the hand-controlled, air-operated valve on the exit line from the pool.)

If this alarm occurs during reactor operation, observe the level-indicating gauge, the flow-rate indicator, the ΔP indicator, and the pool water level to help ascertain the status of the cooling system. If the alarm cannot be cleared by manipulating the valves as indicated above, inform the reactor supervisor of the condition. If a leak has developed in the primary-water system, the reactor should be shut down.

f. Decay Tank Hi Radiation (G-6). - This annunciator alarms if the radiation level in the off-gas line from the decay tank increases to the set point*. If this alarm occurs during normal operation, observe the readouts of the other radiation monitoring units for corroborating evidence that the condition was real and for the possible cause. If the condition is determined to be real, check to be sure that the valve to the off-gas system is open. (Remember: at least one radiation-monitoring unit for the primary-water system must be reliable to allow operation of the reactor.)

*Variable set point, adjusted to ~2 times normal level.

g. PCA Room Hi Temp (G-7). - This annunciator alarms when the temperature in the PCA control room has increased to 90°F. If the PCA control room air conditioner cannot be restarted, the following PCA circuits should be shut off: L-1 (in the upper or "normal" power panel) and L-18 and L-22 (in the lower or "clean" power panel). NOTE: L-2, -4, -6, and -8 in the upper or "normal" power panel should always be shut off when the reactor is not attended.

h. Resistivity Lo (G-8). - This annunciator alarms when the resistivity of the demineralized water decreases to about 300,000 ohm-cm. The sensing element is located in the exit line from the anion column.

If this alarm occurs during normal operation, verify the condition using the bench instrument. Then remove the demineralizer from service. (The demineralizer ion exchange columns should be regenerated as described in Section 6.1i.)

i. Annunciator (G-9). - This annunciator is presently not in use.

j. Secondary Coolant Lo Flow (G-10). - This annunciator alarms when the flow rate of the secondary water system decreases to 300 gpm. The metering orifice is located on the exit line of the heat exchanger.

If this alarm occurs during normal operation, check the status of the secondary pump, the secondary-flow control valve, and the water valve in the tower-basin riser.

k. Primary Inlet Hi Temp (G-11). - This annunciator alarms when the temperature of the water leaving the primary side of the heat exchanger increases to about 105°F. The sensing element is located at the heat exchanger.

If this alarm occurs during normal operation, check the following:

(1) The multipoint-recorder readouts (to verify an increase in temperature).

(2) The primary flow rate.

(3) The condition of the secondary cooling system.

l. Pool Outlet Hi Radiation (G-12). - This annunciator alarms when the radiation level of the water leaving the pool increases to 1000 r/hr. The sensing element is located on the exit water line in the valve pit.

If this alarm occurs during normal operation, observe the readouts of the other radiation-monitoring units for corroboration that the condition is real and for the probable cause. If the condition is determined to be real, the reactor should be shut down. (Remember, at least one radiation-monitoring unit for the primary-water system must be reliable to allow operation of the reactor.)

m. Reactor Core Hi ΔT (G-13). - This annunciator alarms when the differential temperature of the primary cooling water increases to 17°F. (For a description of the core ΔT monitoring system, see Section 3.2b.1.)

When this alarm occurs, a setback is also initiated. The supervisor in charge should be notified immediately.

If this alarm occurs during normal operation, suspect a decrease in flow rate or a leak in the pool piping.

n. Annunciator (G-14). - This annunciator is presently not in use.

3. INSTRUMENTATION AND CONTROLS

3.1. Reactor Controls and Safety Systems

3.1a. Introduction

The BSR controls consist, essentially, of fairly standard ORNL circuitry and instrumentation and the related hardware. These components serve to help the operator effect orderly operation of the reactor throughout startup, steady-state, and shutdown phases. The safety system, by contrast, serves to protect against the results of errors or malfunctions by monitoring the reactor period and power level separately and by providing scram signals should unsafe conditions be approached.

3.1b. Nuclear-Monitoring Channels

The BSR nuclear instrumentation is comprised of standard ORNL instrument channels as described briefly in Table 3.1.1.

Table 3.1.1. Instrument Channels, Details

Type Channel	No. of Channels	Range Covered	Type Chamber	Function
Count rate	1	Source level to N_F	Fission chamber	Start-up channel provides period interlocks for control circuit
Log N	1	Log-N confidence to 300 N_L	Compensated ionization chamber	Intermediate channel provides period scram signal for safety system, period interlocks for control circuit

Table 3.1.1 (continued)

Type Channel	No. of Channels	Range Covered	Type Chamber	Function
Servo	1	~1 w (design) to 2 Mw	Compensated ion chamber	Automatic control of reactor power through limited movement of the regulating rod (selected shim rod)
Safety	3	1% N_F toN_F	Uncompensated ionization chamber	High level scram channel (fast scram), recorder switches provide interlocks in the setback and reverse circuits

The electronics chassis used throughout the nuclear instrument channels are standard ORNL vacuum-tube types. However, because of limited panel space, four composite amplifiers (combining safety pre-amplifier, safety amplifier, period amplifier, and magnet amplifier in one case) were installed.

3.1c. The Safety System

As the name implies, the safety system is intended to safeguard the reactor rather than to provide instrumentation primarily for operating the reactor; the safety system is in the "fast" scram instrumentation. (If the current to the electromagnets supporting the six rods is decreased sufficiently, the rods are dropped into the core. This is the quickest way that the reactor may be shut down--by scramming.)

The "fast" scram is so named because the signal from the safety-level channels and the period-safety channel is transmitted electronically to the magnet amplifiers and is not subjected to time delays of

electrical switches or relays, as in the case with "slow" scrams. (Measured delays, signal-to-rod-to-release, show values of ~10 msec for "fast" scrams and approximately five times this value for "slow" scrams.) Fast scrams are effected independently by each individual safety-level channel if the reactor power level exceeds 145% N_F or by the period-safety portion of the log-N channel if the reactor power level is increasing on a period of one second or less.

3.1d. The Control (or Protective) System

All of the output signals from the nuclear-monitoring channels function within the control system with the exception of those output signals which function within the safety system.

The functions and interactions of the control-system circuits cannot be described completely in narrative form. Therefore, to obtain a detailed understanding of the control system the following reference drawings should be studied:

No.	Title
RC 15-1-4A	Elementary Diagram - Sheet 1 of 5
RC 15-1-4B	Elementary Diagram - Sheet 2 of 5
RC 15-1-4C	Elementary Diagram - Sheet 3
RC 15-1-4D	Elementary Diagram - Sheet 4
RC 15-1-4E	Elementary Diagram - Rods 5 & 6 - Sheet 5

However, to provide a quick reference, some of the important features of the control system of the BSR are presented as follows:

1. Instrument Start. - Initially, the following conditions must exist: key switch ON, no "reverse" condition, all rods "clutched", reactor not in "run", no servo "insert error", no

"log-N setpoint" condition, count-rate meter in OPERATE, and fission-chamber drive in AUTOMATIC. When the "instrument start" switch is momentarily switched to the ON position, an instrument-start request is obtained. This will initiate insertion of the fission chamber to obtain a counting rate of 20 counts/sec and will place the reactor under servo control; the regulating rod will then be withdrawn to its upper limit since the reactor power is below the servo-demand setpoint. This establishes the "instrument start" condition. All shim-safety rods will begin withdrawing at full speed until a transient 25-sec positive period is detected by the counting channel, at which time withdrawal will be inhibited.

Since the short transient period is caused by a change in subcritical multiplication during rod movement, the period will increase to a period greater than 25 sec and rod withdrawal will resume. The process is repeated with ever-decreasing withdraw and ever-increasing withdraw-inhibit intervals until a stable positive period of about 25 sec is established. The power rise will continue until a power level corresponding to 8,000 counts/sec on the count-rate meter is achieved. At that level two events occur. One, the fission chamber will begin to withdraw until it detects a counting rate of less than 100 counts/sec; two, the control system is placed in the "midrange lockout" condition which prevents rod withdrawal in the instrument-start mode. None of these changes alter the control-rod positions, and so the reactor power level will continue to

increase on a 25-sec period until, at 0.01% N_F, log-N confidence will be obtained if the log-N amplifier is in OPERATE and if the log-N channel is "cabled". When log-N confidence is obtained, the "midrange-lockout" condition will be cleared. If, after "midrange lockout" is cleared, the period becomes longer than 25 sec (as determined by both the count rate and the log-N period channel), all rods will withdraw again as required to re-establish a 25-sec period. Finally, "instrument start" is terminated when the servo senses an "insert error" or when "run" is obtained. ("Instrument start" is also terminated instantly if a reverse occurs or if a rod drops.)

2. Automatic Positioning of the Fission Chamber. - Automatic fission chamber positioning is an essential part of the instrument-start mode. In its automatic mode, the control system repositions the fission chamber as needed to keep the count-rate channel within its operating range. If instrument start is requested, the chamber will be inserted (if a positive 25-sec period is not detected) when automatic positioning is selected until at least 20 counts/sec are detected. If a counting rate of 8,000 counts/sec is detected and if automatic positioning is selected, the chamber is withdrawn until less than 100 counts/sec are detected. Insertion of the chamber may be manually initiated, even if the automatic mode is selected, provided that a positive period <25 sec does not exist; manual withdrawal is blocked when the reactor is in the instrument start mode until log-N confidence is obtained. Following a reactor shutdown, the chamber will be

inserted by the automatic positioning circuit to maintain a counting rate of at least 2 counts/sec.

3. Raise-Clutch Mode. - The "raise-clutch" mode permits the shim-safety rod drives to be withdrawn for maintenance purposes without withdrawing the shim-safety poison rods. When the master "raise-clutch" mode switch is put in the RAISE-MODE position, a slow scram is initiated. When individual rod-drive "raise-mode" switches are placed in the RAISE position, the drives will withdraw without moving the poison rods. If any poison rod is lifted from its seat, withdrawal of that rod drive is immediately stopped.

4. Servo Control. - With the "servo-on" condition, a restricted portion of the No. 4 rod is controlled by the servo system and is withdrawn and inserted as needed to reach and maintain the desired reactor power level. The "servo-on" condition should be obtained whenever the "instrument-start-request" condition is obtained. This system must be on and must withdraw the regulating rod to its upper limit before the instrument start mode can be established. It cannot thereafter be turned off without first going out of "instrument start".

When the servo system is stated to be on, it is implied that the servo amplifier is allowed to control a portion of the No. 4 rod as restricted by the regulating rod limit switches--to be worth less than 0.5% $\Delta k/k$--and as restricted by the control system. Normally, the servo amplifier is always on or

operating; but when the control system is in manual, the servo amplifier is not allowed to control the reactor. The servo could fail in such a way that after withdrawing the regulating rod and placing the reactor on a positive period the power level could continue to increase beyond the servo-demand setpoint. If the operator does not discover this and take corrective action, this action will be performed by the control system by a reverse. The servo is turned off by the reverse and can be turned back on only by the operator.

The conditions necessary to obtain servo control are as follows: key switch ON, no reverse, all rods clutched, and the regulating rod above the lower limit and below the upper limit. If these conditions exist, servo control may be initiated by temporarily turning the servo switch to the ON position or by the instrument-start-request circuit.

5. Run. - During a reactor startup, if "run" has not been obtained, the reactor power will be reversed when a level of 400 kw (20% N_F), as determined by the log-N channel, is reached. To obtain "run", the following conditions must be satisfied: power-range selector on the 2-Mw range; servo-demand at 5% (the combination of these first two conditions results in a servo-demand setpoint of 5% N_F or 100 kw); positive period greater than 100 sec; the log-N recorder readout >1.5% N_F and <10% N_F; and either the reactor must be in "manual" or a "withdraw error" must no longer exist. If the conditions are satisfied, "run" is obtained automatically and the power level may be raised above 100 kw.

Once the reactor is in the run mode, only two conditions may continue to exist. First, the power range selector must remain on the 2-Mw range. Second, the power level as determined by the log-N recorder must be maintained $>0.5\%\ N_F$.

6. Key Switch. - The key switch is an aid to administration and is used to prevent unauthorized manipulation of rod drives. When the switch is off, the reactor is scrammed and withdraw-circuit control power is disconnected. However, rod insertion circuits are not turned off. The switch can be turned on only when the key is in its lock and, further, the key cannot be removed until the switch is turned off. (The key is maintained in a locked key box when the switch is in the OFF position.)

7. Setback. - See Section 2.4d. (In addition to the conditions listed in this section, placing the local demand switch in the lower position and, if remote operation is selected, placing the remote demand switch in the LOWER position will initiate a setback.)

8. Slow Scram. - See Section 2.4d.

9. Reverse. - See Section 2.4d.

3.1e. Procedures for Checking the Control and Safety System

Example 3.1.1 illustrates the procedural checks used by personnel of the Instrument and Controls Division to evaluate the performance of the various channels. Assistance by Operations personnel should be given as needed.

BULK SHIELDING REACTOR

REACTOR INSTRUMENTATION & CONTROLS MAINTENANCE PROCEDURES,

CALIBRATION AND DATA

PROCEDURE NO. BSR 202

PROCEDURE APPROVAL:

Sam S. Hurt III
Reactor Supv. - Operations Div.

H. W. West
Reactor Controls Dept. I & C Div.

Example 3.1.1. Reactor Instrumentation and Controls Maintenance Procedures
(Pages 3-9 through 3-96)

PROCEDURE NO. BSR 202

PAGE A

DATE 7/1/68

REVISION 0

Sam S. Hurt III
Reactor Supv. - Operations Div.

K W West
Reactor Controls Dept. I & C Div.

SECTION	TITLE	PAGE
1.1	RESISTANCE CHECKS	2
1.1.1	Ionization Chamber Leakage	2
1.1.2	Clutch & Seat Switch Leakage	3
1.1.3	Shim Rod Drive Magnet	4
2.1	RECORDER CHECKS	5
3.1	COUNT RATE CHANNEL TESTS	6
3.1.1	Log Count Rate Meter	6
3.1.2	PHS Curves	7
4.1	LOG N CHANNEL TESTS	9
4.1.1	Sigma Output Check	9
4.1.2	Period Amplifier D. C. Level	10
4.1.3	Log N & Period Amplifiers	11
5.1	SAFETY SYSTEM TESTS	15
5.1.1	Level Safety Test	15
5.1.2	Linearity Checks	16
5.1.3	Magnet Amplifier Check	19
6.1	SERVO CHANNEL TESTS	21
6.1.1	Servo Amplifiers & μμ Ammeter Test	21
6.1.2	Regulating Rod Test	22

PROCEDURE NO. BSR 202

PAGE B

DATE 7/1/68

REVISION 0

Sam S. Hurt III
Reactor Supv. - Operations Div.

K W West
Reactor Controls Dept. I & C Div.

SECTION	TITLE	PAGE
7.1	SHIM ROD TESTS	24
7.1.1	Magnet Drop Currents	24
7.1.2	Drop Point	24
7.1.3	Rod Release Time	26
7.1.4	Time of Flight	27
7.1.5	Simulation of N_L & N_F Currents	29
8.1	SAFETY SYSTEM FUNCTIONAL CHECKS	31
9.1	NUCLEAR RECORDER SWITCHES	32
10.1	TROUBLE MONITOR CHECK	33
11.1	MANUAL SCRAMS	35
12.1	ANNUNCIATORS	36
13.1	IONIZATION CHAMBER POWER SUPPLY TEST	38
14.1	RESTORATION OF SYSTEM	39
15.1	CHAMBER SATURATION CHARACTERISTICS	40

PROCEDURE NO. BSR 202

PAGE 1

DATE 7/1/68

REVISION 0

Sam S. Hurst III
Reactor Supv. - Operations Div.

K W West
Reactor Controls Dept. I & C Div.

BSR INSTRUMENT MAINTENANCE PROCEDURE

EQUIPMENT NEEDED:

The following test equipment is used for this checkout procedure:

Volt Box

Pile Period and Current Simulator (RC15-10-23)

Release Time Pulser (RC15-10-24)

Digital Timer

Rod-Drop Test Unit (RC-10-22)

Sigma Response Generator

Digital Voltmeter

Millivolt Potentiometer

Portable Picoameter and variable voltage power supply

Recorder Calibration

Saturation Curve Test Unit

Level Safety Power Supply Test Box

Sigma Amplifier Load Simulator

Megger

Before starting these checks, obtain permission from the Operation Supervisor on duty.

PROCEDURE NO. BSR 202

PAGE 2

DATE 7/1/68

REVISION 0

Sam S. Hart III
Reactor Supv. - Operations Div.

K W West
Reactor Controls Dept. I & C Div.

1.1 RESISTANCE CHECKS

1.1.1 Ionization Chamber Leakage Check

Before starting this check, turn the control power key switch off.

(a.) Disconnect chamber and preamp grid offset leads from the No. 1 Level Safety Composite Amplifier and temporarily jumper the "chamber" and "grid offset" connectors with a 330 K ohm resistor. Note: Ground shield of grid offset cable.

(b.) Connect the chamber lead to a portable picoammeter. Read and record current on Check Sheet No. BSR 203 page 1. Leakage current readings $< 3 \times 10^{-9}$ are acceptable.*

(c.) Remove the 330 K ohm jumper and restore chamber and preamp grid offset leads to appropriate connectors.

(d.) Repeat steps (a.) thru (c.) for No. 2 & 3 level safety ionization chambers.

(e.) Turn the selector switch on the Log N Amplifier to the "GROUND" position.

(f.) Disconnect the Log N compensated chamber lead from the Log N Amplifier chamber input connector, and connect the lead to a portable picoammeter.

(g.) Read and record the current on Check Sheet No. BSR 203 page 1. Leakage current readings $< 3 \times 10^{-11}$ are acceptable.

*May use 45 volt battery as chamber B+ in order to stabilize these low current readings.

PROCEDURE NO. BSR 202

PAGE 3

DATE 7/1/68

REVISION 0

Sam S. Hart III
Reactor Supv. - Operations Div.

K W West
Reactor Controls Dept. I & C Div.

(h.) Reconnect the chamber lead to the Log N Amp. input connector.

(i.) Read and record the installed servo picoammeter current on Check Sheet No. BSR 203 page 1. Leakage current readings $< 3 \times 10^{-10}$ are acceptable.

1.1.2 Clutch & Seat Switch Leakage Resistance Checks

(a.) Raise the No. 1 Shim Rod approximately one inch above seat.

(b.) Disconnect the seat switch at the side connector on the drive. Measure the seat switch open resistance at this connector with a portable ohm-meter and record on Check Sheet BSR 203 page 1. Resistances greater than 5 K ohms are acceptable. Measure and record the resistance of each seat switch lead to ground. Leave the side connector open.

(c.) Slow scram the No. 1 Shim Rod. Reset scram.

(d.) Following completion of the automatic rundown, disconnect the No. 1 rod drive Winchester connector.

(e.) Measure the clutch switch open resistance between pins J & K with a portable ohm-meter and record on Check Sheet No. BSR 203 page 1. Resistances greater than 5 K ohms are acceptable. Measure and record each clutch switch lead to ground.

(f.) Reconnect the No. 1 seat switch side connector and the No. 1 rod drive Winchester connector.

(g.) Repeat steps (a.) thru (f.) for No. 2,3,4, 5 & 6 Shim Rods.

PROCEDURE NO. BSR 202

PAGE 4

DATE 7/1/68

REVISION 0

Sam S. Hurt III
Reactor Supv. - Operations Div.

K W West
Reactor Controls Dept. I & C Div.

1.1.3 Shim Rod Drive Magnet Resistance Checks

(a.) Disconnect the B+ and B+ return magnet leads from the No. 1 magnet amplifier and connect one lead to a portable 500 volts megohm-meter. Connect the other terminal of the megohm-meter to building ground.

(b.) Read and record the magnet resistance to ground on Data Sheet No. BSR 203 page 1.

Resistances > 100 megohms are acceptable.

(c.) Repeat steps (a.) and (b.) for magnets 2 thru 6.

(d.) Using a portable volt-ohm-meter, measure and record the No. 1 magnet coil resistance between the B+ and B+ return leads on Check Sheet No. BSR 203 page 1.

Nominal resistance of 80 ohms is acceptable.

(e.) Reconnect the No. 1 magnet B+ and B+ return leads to the No. 1 magnet amplifier.

(f.) Repeat steps (d.) and (e.) for magnets 2 thru 6.

PROCEDURE NO. BSR 202

PAGE 5

DATE 7/1/68

REVISION 0

Sam S. Hurt III
Reactor Supv. - Operations Div.

K W West
Reactor Controls Dept. I & C Div.

2.1 RECORDER CHECKS

Check and re-calibrate, if necessary, the recorders in accordance with the following table:

Input Millivolts	No. 1, 2, 3 Safety	Log N & CRMT	Log N	Log CR	Servo	Reg Rod Position
-0.91	X	-30	X	X	X	X
0.00	0	∞	0.0001	1	0	X
+0.91	X	+30	X	X	X	X
1.00	20	X	0.00045	2.6	11.5	0
2.73	X	10	X	X	X	X
3.00	60	X	.0092	16	33.5	25
4.50	X	X	X	X	X	X
5.00	100	X	0.163	10^2	55.5	50
5.46	X	5	X	X	X	X
7.00	140	X	3.5	625	77.5	75
9.00	180	X	70	4000	100	100
9.10	X	3	X	X	X	X
10.00	200	X	300	10^4	X	X

Record information on Check Sheet No. BSR 203 page 2A & 2B.

PROCEDURE NO. BSR 202

PAGE 6

DATE 7/1/68

REVISION 0

Sam S. Hunt III
Reactor Supv. - Operations Div.

K W West
Reactor Controls Dept. I & C Div.

3.1 COUNT RATE CHANNEL TESTS

3.1.1 Log Count Rate Meter

Record steps (b.), (e.), & (k.) on Check Sheet No. BSR 203 page 3.

(a.) Turn the "Cal.-Use" switch on the Log Count Rate Meter to the "Calibrate" position.

(b.) Adjust the "60 cycle" potentiometer on the Log Count Rate Meter to give a reading of 60 on the Log Count Rate Meter recorder.

(c.) Turn the "Cal.-Use" switch on the Log Count Rate Meter to the "Use" position.

(d.) Adjust the PHS on the Pulse Amplifier into the noise region, until a 1000 count/sec. rate is obtained on the scaler.

(e.) Adjust the "slope" potentiometer on the Log Count Rate Meter to obtain a reading of 1000 on the Log Count Rate Meter recorder.

(f.) Turn the "Cal.-Use" switch on the LCRM to the "Cal." position.

(g.) Connect the Pile Period Simulator (Count Rate Output) in the Test Cabinet, to "Utility 2" on the test panel. Connect the cable from "Utility 2" to the "Period Test" connector on the rear of the Log Count Rate Meter chassis.

(h.) With the simulator power switch "OFF", adjust the "C.R. Adjust" potentiometer on the Simulator to give a reading of 5 on the Log Count Rate Period recorder.

(i.) Turn the "Period" selector switch on the simulator to the "Cal." position. Turn the Simulator power switch to "ON".

PROCEDURE NO. BSR 202

PAGE 7

DATE 7/1/68

REVISION 0

Sam S. Hurt III
Reactor Supv. - Operations Div.

K W West
Reactor Controls Dept. I & C Div.

(j.) Adjust the "Pile Power Adjust" potentiometer on the Simulator, to give a reading of 600 counts/sec. on the Log Count Rate Meter recorder.

(k.) Set the "Period-Calibrate" switch on the Simulator to the values below, and check for accuracy on the Log Count Rate Period recorder.

Setting on Period Simulator	LCR Period Recorder Reading
30 sec.	30 ± 5 sec.
7 sec.	7 ± 1/2 sec.
5 sec.	5 ± 1/2 sec.
3 sec.	3 - 1/2 sec.

If accuracy is found to be out of the above tolerance, correct the trouble before proceeding.

(l.) Remove the cable from the "Period Test" connector on the rear of the Log Count Rate Meter chassis.

(m.) Turn the "Cal.-Use" switch on Log Count Rate Meter to the "Use" position.

3.1.2 Plot PHS Curves

(a.) Turn the Fission chamber switch to the "Withdraw" position, and hold until the fission chamber is fully withdrawn.

PROCEDURE NO. BSR 202

PAGE 8

DATE 7/1/68

REVISION 0

Sam S. Hurt III
Reactor Supv. - Operations Div.

K W West
Reactor Controls Dept. I & C Div.

(b.) Adjust the "PHS" potentiometer on the Pulse Amplifier, to obtain a reading of 10,000 cps on the Log Count Rate Meter recorder.

(c.) Record the PHS setting on 4 cycle semi-log paper in Check Sheet No. BSR 203 page 4.

Record the PHS settings required to obtain the various counting rates listed, and plot the curve.

This curve should be, in general, a straight line with a PHS of less than 8 volts at 10 cps and less than 4 volts at 10,000 cps.

(d.) Turn the Fission Chamber switch to the "Insert" position, and hold until the Fission Chamber inserts to < 20 inches.

Plot the neutron curve on the same graph used in step (c.), from 10 to 10,000 cps.

(e.) Select the PHS operating voltage to operate on the neutron curve. The PHS chosen shall be greater than 2 times the PHS required for 10 cps of alpha, and or noise, as determined by the alpha-noise curve, and shall produce a neutron counting rate greater than 2 cps.

PROCEDURE NO. BSR 202

PAGE 9

DATE 7/1/68

REVISION 0

Sam S. Hurt III
Reactor Supv. - Operations Div.

K W West
Reactor Controls Dept. I & C Div.

4.1 LOG N CHANNEL TESTS

Composite Amplifier - Test Connections

(a.) Remove the transfer plug from the J-5 connector on the rear of the Period Composite Amplifier chassis, and connect the test cable from the "Test Panel" to J-5.

(b.) Connect from the "Sigma Input" connector on the "Test Panel", to the "Output" connector on the Volt Box in the Test Panel.

(c.) Connect from the "Sigma Out" connector on the "Test Panel" to the digital voltmeter.

4.1.1 Sigma Output Check

Record steps (d.), (f.), (g.) & (h.) on Check Sheet No. BSR 203 page 5.

(a.) Adjust the voltage from the Volt Box in the Test Panel to 22 volts. Adjust the "Recorder Zero" potentiometer on the Composite Amplifier, until the panel meter reads zero.

(b.) Adjust the voltage from the Volt Box to 32 volts. Adjust the "Recorder Gain" potentiometer to read 100 on the panel meter.

(c.) Repeat steps (a.) and (b.) until no further adjustments are necessary.

(d.) Adjust the voltage from the Volt Box to 37 volts. The panel meter on the Composite Amplifier should read 150 ± 2%. If the reading does not come within this range, repair or replace the Composite Amplifier.

PROCEDURE NO. BSR 202

PAGE 10

DATE 7/1/68

REVISION 0

Sam S. Hurst III
Reactor Supv. - Operations Div.

K W West
Reactor Controls Dept. I & C Div.

(e.) Adjust the Volt Box to 35.5 volts.

Adjust the "Scram" potentiometer on the Composite Amplifier, until the "Abnormal" light on the Scram Level Monitor comes "ON", and the "Normal" light goes "OFF".

(f.) Adjust the Volt Box to 22 volts.

Observe the Sigma Bus voltage on the digital voltmeter.

Should read 38 volts ± 1 volt.

(g.) Adjust the Volt Box to 32 volts.

Observe the Sigma Bus voltage on the digital voltmeter.

Should read 39 volts ± 1 volt.

(h.) Adjust the Volt Box to 37 volts.

Disconnect the Sigma Bus cable from connector (J-6) on the rear of the Composite Amplifier chassis.

Digital voltmeter should read > 43.5 volts.

4.1.2 Period Amplifier D. C. Level

(a.) Disconnect the digital voltmeter from the "Sigma Out" connector, and connect the voltmeter to the "Period Amplifier Output" connector on the Test Panel.

Observe the "Pile Period" meter on the Log N Amplifier.

Period must be infinite before making the following adjustment.

(b.) Adjust the "D. C. Level" potentiometer on the Composite Amplifier, to give a 22 volt reading on the digital voltmeter.

Record the adjusted voltage reading on Check Sheet No. BSR 203 page 5.

PROCEDURE NO. BSR 202

PAGE 11

DATE 7/1/68

REVISION 0

Reactor Supv. - Operations Div.

Reactor Controls Dept. I & C Div.

4.1.3 Log N and Period Amplifiers

Record steps (i.) and (p.) on Check Sheet BSR 203 page 6.

(a.) Disconnect the digital voltmeter from the "Period Amplifier Output" connector on the Test Panel.

Disconnect the Volt Box from the "Sigma Input" connector on the Test Panel.

Connect a jumper cable between the "Period Amplifier Output" and the "Sigma Input" connectors on the Test Panel.

(b.) Turn the selector switch on the Log N Amplifier to the "GROUND" position.

Adjust the "GROUND SET" potentiometer until the Log N recorder reads 0.0001.

(c.) Turn the selector switch on the Log N Amplifier to the "Lo-Calibrate" position.

Adjust the "Calibrate" potentiometer until the Log N Recorder reads 0.00022.

(d.) Turn the selector switch on the Log N Amplifier to the "Hi-Calibrate" position.

Adjust the "Gain" potentiometer until the Log N Recorder reads 22.

Note: Repeat steps (b.), (c.), and (d.) until the span is correct.

(e.) Turn the selector switch on the Log N Amplifier to the "GROUND" position.

(f.) Disconnect the Log N chamber cable from the "Input" connector on the rear of the Log N Amplifier chassis and connect test cable from Test Panel "Utility-2".

PROCEDURE NO. BSR 202

PAGE 12

DATE 7/1/68

REVISION 0

Sam S. Hurt III
Reactor Supv. - Operations Div.

K H West
Reactor Controls Dept. I & C Div.

(g.) Connect the "Log N" connector on the Chamber Simulator in the portable Test Cabinet, to the "Utility-2" connector on the Test Panel.

(h.) Turn the Selector switch on the Log N Amplifier to the "Operate" positon.

(i.) Set the Chamber Simulator to the values below, and observe that the Log N Recorder and panel meter on the Log N Amplifier gives the indicated reading.

Setting & Current Source Value (Amps.)		Scale Reading
.0001	(5×10^{-11})	.0001 N_L
.001	(5×10^{-10})	.001 N_L
.01	(5×10^{-9})	.01 N_L
.1	(5×10^{-8})	.1 N_L
1.0	(5×10^{-7})	1.0 N_L
10.0	(5×10^{-6})	10.0 N_L
100.0	(5×10^{-5})	100.0 $N_L(N_F)$

(j.) Turn the selector switch on Log N Amplifier to the "GROUND" positon.

(k.) Disconnect the cable from the "Log N" connector on the Chamber Simulator in the Test Cabinet, and connect to the Period Simulator "Log N Output" connector in the Test Cabinet.

(l.) Turn the selector switch on the Log N Amplifier to the "Operate" position.

PROCEDURE NO. BSR 202

Sam S. Hurt III
Reactor Supv. - Operations Div.

K W West
Reactor Controls Dept. I & C Div.

PAGE 13

DATE 7/1/68

REVISION 0

(m.) Turn the "Power" switch on the Period Simulator to the "ON" position.

Turn the "Period-Calibrate" switch on the Period Simulator to the "Calibrate" position. Adjust the "Pile Power Adjust" potentiometer on the Period Simulator until the Log N recorder reads 0.012. (i.e., the black calibrate line).

(n.) Turn the "Period Slope" switch to the "+ Period" position.

(o.) Connect the digital voltmeter to the "Sigma Out" connector on the Test Panel.

(p.) Set the "Period-Calibrate" switch on the Simulator to the listed values, and observe that the Log N Period Recorder and panel meter corresponds with the following.

Setting on Period Simulator (Seconds)	Log N Period Recorder Reading	Period Sigma Output (Volts)
30	30 ± 5	38 (+ 1 -.5v.)
7	7 ± 1/2	38 (+ 1 -.5v.)
5	5 ± 1/2	38 (+ 1 -.5v.)
3	3 ± 1/2	38 (+ 1 -.5v.)
1	off scale	> 42.5

(q.) Turn the selector switch on the Log N Amplifier to the "GROUND" position.

Connect the Log N chamber cable to the "Input" connector on the Log N Amplifier.

PROCEDURE NO. BSR 202

PAGE 14

DATE 7/1/68

REVISION 0

Sam S. Hurt III
Reactor Supv. - Operations Div.

K W Watt
Reactor Controls Dept. I & C Div.

(r.) Connect the Sigma Bus cable to connector J-6 on the rear of the Composite Amplifier.

(s.) Disconnect the test cable from connector J-5 on the rear of the Composite Amplifier, and install the J-5 "Transfer" plug.

PROCEDURE NO. BSR 202

PAGE 15

DATE 7/1/68

REVISION 0

Sam S. Hurt III
Reactor Supv. - Operations Div.

K W West
Reactor Controls Dept. I & C Div.

5.1 SAFETY SYSTEM TESTS

No rod movement will be permitted during these tests, since the level safetys will be out of service. All rods must remain in their seats, and mode switches set in the "OFF" position.

5.1.1 Level Safety Test

Record steps (d.), (e.),(g.), (h.) & (k.) on Check Sheet No. BSR 203 pages 7 & 8.

(a.) Remove the J-5 connectors from the No. 1, 2, & 3 Level Safety Composite Amplifiers and connect the test cable from the "Test Panel" to the J-5 connectors.

(b.) Connect the Volt Box to the No. 1, 2, & 3 "Sigma In" connectors on the Test Panel.

(c.) Connect jumpers from the No. 1, 2, & 3 "Sigma Out" connectors, to the No. 1, 2, & 3 "Sigma Bus" connectors.

(d.) Adjust the Volt Box to 22 volts.

Adjust the "Recorder Zero" potentiometer on the front panel of the No. 1 Level Safety Composite Amplifier, until the corresponding Level Safety recorder reads zero.

Repeat this step for the No. 2 & 3 Level Safety Composite Amplifier.

CAUTION: Do not adjust below zero.

(e.) Adjust the Volt Box to 32 volts.

Adjust the "Recorder Gain" potentiometer on the front panel of the No. 1 Level Safety Composite Amplifier, until the corresponding Level Safety recorder reads 100.

Repeat this step for No. 2 & 3 Level Safety Composite Amplifiers.

(f.) Repeat steps (d.) and (e.) until no further adjustments are necessary.

(g.) Adjust the Volt Box to 37 volts.

The No. 1, 2, & 3 Level Safety Recorders should read 150 ± 2.

(h.) Adjust the Volt Box to 35 volts.

Push the "Scram Reset" button on the No. 1, 2, & 3 Level Safety Composite Amplifiers.

Observe that the "Normal" scram level lights are "ON".

Adjust the Volt Box 35.5 volts.

Observe that the "Abnormal" scram level lights are "ON".

If the above conditions are not observed, adjust the "Scram" potentiometer on the appropriate Level Safety Composite Amplifier.

(i.) Disconnect the Volt Box from the No. 1, 2, & 3 "Sigma In" connectors.

(j.) Connect jumpers from the No. 1, 2, & 3 "Preamp Out" connectors, to the No. 1, 2, & 3 "Sigma In" connectors on the Test Panel.

(k.) Read and record the "Preamp Grid Offset" potentiometer on the No. 1, 2, & 3 Level Safety Composite Amplifiers.

Adjust the "Preamp Grid Offset" potentiometer on the No. 1, 2, & 3 Level Safety Composite Amplifiers until the corresponding Level Safety Recorder reads zero.

5.1.2 Linearity Checks

(a.) Disconnect the chamber input connector J-2 from the No. 1 Level Safety Composite Amplifier.

PROCEDURE NO. BSR 202

PAGE 17

DATE 7/1/68

REVISION 0

Sam S. Hurt III
Reactor Supv. - Operations Div.

K W West
Reactor Controls Dept. I & C Div.

Connect a test cable from connector J-2 on the No. 1 Level Safety Composite Amplifier, to the "Utility-1" connector on the rear of the Test Panel.

Connect the Sigma Response Generator to the "Utility-1" connector on the front of the Test Panel.

(b.) Remove the jumpers from "Sigma Out" to "Sigma Bus" on the No. 1, 2, & 3 Level Safety Composite Amplifiers.

(c.) Connect a T-connector to the No. 1 "Sigma Out" connector on the front of Test Panel.

Connect the Digital Voltmeter into one side of the T-connector.

Connect the Sigma Amplifier Load Simulator into the other side of the T-connector.

(d.) Set the Sigma Response Generator "Percent" selector to zero and adjust the "Zero" control on the Sigma Response Generator until the corresponding Level Safety recorder reads zero.

(e.) Set the Sigma Response Generator "Percent" selector to 100, and adjust the "Span" control on the Sigma Response Generator until the corresponding Level Safety recorder reads 100.

(f.) Repeat steps (d.) and (e.) until both conditions are satisfied.

(g.) Record the information requested on Check Sheet No. BSR 203 page 9A and plot the corresponding curve.

(h.) Response curve analysis.

Reactor Controls Department shall verify that the curves fall within accepted limits as follows:

PROCEDURE NO. BSR 202

PAGE 18

DATE 7/1/68

REVISION 0

Sam S. Hurt
Reactor Supv. - Operations Div.

K W West
Reactor Controls Dept. I & C Div.

(a.) The sigma bus response curve shall intercept the accepted limit lines at 0% (38 ± 1/2 v.), 100% (39 ± 1/2 v.) and 150% (43 ± 1 v.) as shown on data sheet.

(b.) The slope shall always be positive and the curve shall be continuous.

(c.) The recorder response curve shall pass through 0,0 and shall have a linear ration of 1:1 within 2% full scale.

Note: If the curve does not fall within the acceptable limits, then repairs or adjustments must be made. If such repairs or adjustments are ineffective then investigation and evaluation will be required. The evaluation will be made by the Reactor Supervisor, or his designated representative and the Reactor Controls Engineer responsible for reactor instrument maintenance.

(i.) Remove the test cable between connector J-2 on the Level Safety Composite Amplifier and the "Utility-1" connector on Test Panel. Connect the chamber input connector J-2 to the Safety Level Composite Amplifier.

Disconnect the T-connector from the "Sigma Out" connector on Test Panel.

(j.) Repeat steps (a.) thru (i.) for No. 2 & 3 Safety Level Composite Amplifiers using Check Sheets Nos. BSR 203, pages 9B and 9C.

(k.) Disconnect the Sigma Response Generator from the "Utility-1" connector.

PROCEDURE NO. BSR 202

PAGE 19

DATE 7/1/68

REVISION 0

Sam S. Hurst
Reactor Supv. - Operations Div.

K W West
Reactor Controls Dept. I & C Div.

(1.) Connect the Jumpers from the "Sigma Out" to the "Sigma Bus" on the No. 1, 2, & 3 Level Safety Composite Amplifiers.

5.1.3 Magnet Amplifier Check

(a.) Remove the three jumpers from the "Preamp Out" to the "Sigma In" connectors on the Test Panel.

(b.) Connect the Volt Box to the three "Sigma In" connectors on the Test Panel.

(c.) Adjust the Volt Box to 37 volts output.

(d.) Adjust the magnet current potentiometers on the front of each Magnet and Composite Amplifiers to read 35 Ma on the magnet current meters.

(e.) Record the data required on Check Sheet No. BSR 203 pages 10A thru F and plot the corresponding curves.

(f.) Response curve analysis.

Reactor Controls Department Personnel shall verify that the curves fall within the accepted limits as follows:

(1.) The response curve shall intercept the accepted limit lines at 22 v. (70 ± 4 Ma), 32 v. (65 ± 3 Ma), and 37 v. (35 ± 1 Ma) as shown on check sheet.

(2.) The slope shall always be negative and the curve shall be continuous.

Note: If the curves do not fall within the acceptable limits, then repairs or adjustments must be made.

PROCEDURE NO. BSR 202

PAGE 20

DATE 7/1/68

REVISION

Sam S. Hurt III
Reactor Supv. - Operations Div.

K W West
Reactor Controls Dept. I & C Div.

If such repairs or adjustments are ineffective, then investigation and evaluation will be required. The evaluation will be made by the Reactor Supervisor or his designated representative, and the Reactor Controls Engineer responsible for reactor instrument maintenance.

(g.) Remove test cable from the J-5 connector on the No. 1, 2, & 3 Level Safety Composite Amplifiers.

Reconnect the normal operating J-5 connector to the No. 1, 2, & 3 Level Safety Composite Amplifiers.

(h.) Remove all test jumpers from the Test Panel.

PROCEDURE NO. BSR 202

PAGE 21

DATE 7/1/68

REVISION 0

Sam S. Hurt III
Reactor Supv. - Operations Div.

K W West
Reactor Controls Dept. I & C Div.

6.1 SERVO CHANNEL TESTS

6.1.1 Servo Amplifier & μμ Ammeter Test

Record steps (d.), (e.), (f.), (g.), (h.), & (i.) on Check Sheet No. BSR 203 page 11.

(a.) Disconnect the compensated ion chamber from the input of the μμ Ammeter.

(b.) Connect the Current Simulator to the "Utility-1" connector on the Test Panel, and connect "Utility-1" to μμ Ammeter input. *See Note Below.

(c.) Set the range switch on the μμ Ammeter at the 2 KW range. Zero the μμ Ammeter.

(d.) Adjust the input current to 2.25×10^{-8}. Observe that the "Insert" light comes "ON".

(e.) Raise the "Demand" until both "Insert" and "Withdraw" lights are "OFF". Demand should be 50 ± 2%.

(f.) Lower the "Demand" approximately 1%. Observe that the "Insert" light comes "ON".

*When a new Servo Amplifier has been installed, perform these two steps before proceeding to step (c.)

(1.) Adjust the "Gain" potentiometer on the front panel of the Servo Amplifier to approximately 50%.

(2.) Adjust the "Damping" potentiometer on the front panel of the Servo Amplifier to approximately 25%.

PROCEDURE NO. BSR 202

PAGE 22

DATE 7/1/68

REVISION 0

Sam S. Hunt III
Reactor Supv. - Operations Div.

K W West
Reactor Controls Dept. I & C Div.

(g.) Repeat step (e.).

(h.) Raise the "Demand" approximately 1%.

Observe that the "Withdraw" light comes "ON".

(i.) Check the μμ Ammeter for the correct reading with input currents as follows:

Input Current	Meter	Range
4.5×10^{-9} Amps.	9.0	200 W
4.5×10^{-8} Amps.	9.0	2 KW
4.5×10^{-7} Amps.	9.0	20 KW
4.5×10^{-6} Amps.	9.0	200 KW
4.5×10^{-5} Amps.	9.0	2 Mw*

*Demand should automatically reduce to 5%.

6.1.2 Regulating Rod Test

Record steps (f.) & (g.) on Check Sheet No. BSR 203 page 12.

This test must be made under the supervision of authorized personnel in the Operations Department.

(a.) Obtain the necessary conditions to raise the No. 4 rod approximately 3 inches.

(b.) Set the range switch on the μμ Ammeter at 200 KW.

(c.) Adjust the Current Simulator to give an input current of 2.25×10^{-6} Amperes.

PROCEDURE NO. BSR 202

PAGE 23

DATE 7/1/68

REVISION 0

Sam S. Hurt III
Reactor Supv. - Operations Div.

K W West
Reactor Controls Dept. I & C Div.

(d.) Set the "Demand" at approximately 50% (achieve balance).

(e.) Obtain servo.

The drive will be balanced with both "Insert" and "Withdraw" lights will be "OFF".

(f.) Lower the "Demand" to approximately 49%, and observe on the Regulating Rod Synchro that the Regulating Rod inserts.

(g.) Raise the "Demand" to approximately 51%, and observe on the Regulating Rod Synchro that the Regulating Rod withdraws.

(h.) Switch the Reactor out of servo.

(i.) Disconnect the Current Simulator from the μμ Ammeter and reconnect the chamber signal cable.

(j.) Set the range switch on the μμ Ammeter to 20 watts.

(k.) Insert the No. 4 Rod to the seat position.

(l.) Lower the "Demand" to 5% (LLS).

PROCEDURE NO. BSR 202

PAGE 24

DATE 7/1/68

REVISION 0

Sam S. Hunt III
Reactor Supv. - Operations Div.

K W West
Reactor Controls Dept. I & C Div.

7.1 SHIM ROD TESTS

All rod movements must be made under the direction of the Operation's Supervisor.

7.1.1 Magnet Drop Currents

(a.) Turn the "Bus Protect" potentiometer on each Magnet Amplifier to the full clockwise position.

(b.) Adjust the "Magnet Current" potentiometer on each Magnet Amplifier to 80 Ma.

(c.) Raise all rods 1 inch and slow scram the reactor. Reset scram before the rods make clutch.

(d.) Raise No. 1 Rod 12 inches.

(e.) Slowly reduce the magnet current, by turning the "Magnet Current" potentiometer on the Magnet Amplifier, until the rod drops, as indicated by the clutch light.

(f.) After the rod has clutched, read and record the magnet current on Check Sheet No. BSR 203 page 13A.

(g.) Repeat steps (b.) thru (f.) for 3" and Upper Limit.

(h.) Repeat steps (b.) thru (g.) for Shim Rods No. 2 thru 6.

(i.) Post the drop currents (those obtained at 12") on the console data card.

7.1.2 Drop Point

(a.) Disconnect the normal operating J-5 connector from one of the Level Safety Composite Amplifiers and the Period Composite Amplifier.

PROCEDURE NO. RSR 202

PAGE 25

DATE 7/1/68

REVISION 0

Sam S. Hurt III
Reactor Supv. - Operations Div.

K W West
Reactor Controls Dept. I & C Div.

(b.) Connect the appropriate J-5 test connector to the Level Safety Composite and the Period Composite Amplifiers.

(c.) Connect a jumper cable from the "Sigma Out" to the "Sigma Bus" connectors on the front of Test Panel, for the Level Safety Composite and Period Composite Amplifiers selected in step (a.).

(d.) Connect the "Output" connector on the Volt Box to the "Sigma Input" connectors for the Level Safety Composite and Period Composite Amplifiers selected in step (a.).

(e.) Adjust the Volt Box to 22 volts.

Observe that the Period Composite Monitor Meter (in position No. 1) reads zero.

The appropriate Level Safety recorder should read zero.

(f.) Adjust the Volt Box to 36.5 volts.

Observe that the Period Composite Meter and the appropriate Level Safety recorder reads 145 ± 2.

(g.) Set the magnet current for each rod to the drop current recorded in Section 7.1.1 step (i.). This setting must be observed and verified by the Operation Supervisor.

(h.) Adjust the Volt Box to 22 volts.

Slowly turn the "Bus Protect" potentiometer counter clockwise on each Composite and Magnet Amplifier until the magnet current drops ~ 1 Ma.

(i.) Raise all rods 1 inch and slow scram the reactor.

Reset scram before rods make clutch.

Sam S. Hurt III
Reactor Supv. - Operations Div.

K W West
Reactor Controls Dept. I & C Div.

(j.) Raise the No. 1 shim rod 12 inches.

Inhibit rod reverse by opening circuit breaker L-2, located in Panel E 2 on east wall of the control room.

(k.) Slowly increase the voltage input to the two Composite Amplifiers until No. 1 shim rod drops as indicated by clutch light.

Observe the Safety Recorder reading, and record on Check Sheet No. BSR 203 page 13A.

Rod drops with a Safety Recorder reading of 145 ± 5 are acceptable.

(l.) Adjust the Volt Box to 22 volts.

Close circuit breaker L-2.

Repeat steps (j.) and (k.) for rods 2 thru 6.

7.1.3 Rod Release Time

(a.) Remove test connector J-5 from the Level Safety Composite Amplifier selected in Section 7.1.2 step (a.), and connect the normal operating J-5 connector.

(b.) Remove the jumpers from the "Output" connector on the Volt Box to the "Sigma Input" connectors for the Level Safety Composite Amplifier and Period Amplifier.

(c.) Connect the Release Time Pulser (RC15-10-24) to the "Sigma In" connector on Period Section of Test Panel.

(d.) Turn the Pulser "ON".

Turn the "Pulse Width" potentiometer to 10 milliseconds, and with the oscillator switch turned "ON", adjust the "Repetition Rate" to give one pulse per second.

Sam S. Hurt Jr.
Reactor Supv. - Operations Div.

K W West
Reactor Controls Dept. I & C Div.

Return the "Pulse Width" potentiometer to zero.

(e.) Set the "D. C. Level" at 22 volts.

Push the "PHS-Output" button and adjust the "PHS" control until the magnet currents on all meters read less than 1 Ma.

Re-check between the "D. C. Level" of 22 volts and "PHS" with the button pushed, until both conditions are satisfied.

(f.) Set the "Pulse-Width" multiplier to the X 1 position.

(g.) Raise all rods one inch and slow scram the reactor.

Reset scram before the rods make clutch.

(h.) Raise the No. 1 shim rod 12 inches.

Slowly turn the "Pulse-Width" potentiometer in half-millisecond steps, until the rod drops.

Read and record the "Pulse-Width" potentiometer value (i.e., release time) on Check Sheet No. BSR 203 page 13A.

(i.) Repeat step (h.) for shim rods 2 thru 6.

(j.) Remove the J-5 test connector from the Period Composite Amplifier and connect the normal operating J-5 connector.

(k.) Disconnect the Release Time Pulser from the Test Panel.

7.1.4 Time of Flight

CAUTION: Place Log N Amplifier in "Operate" position.

(a.) Set the Time-of-Flight timer as follows:

PROCEDURE NO. BSR 202

PAGE 28

DATE 7/1/68

REVISION 0

Sam S. Hurt III
Reactor Supv. - Operations Div.

K W West
Reactor Controls Dept. I & C Div.

FUNCTION	SETTING
Display Time	Manual
Time Interval	10^{-3}
Function	Period A to B
Input "A"	Sensitivity ÷ 100 Trigger Slope + Trigger Level 9 o'clock
Input "B"	Sensitivity ÷ 100 Trigger Slope + Trigger Level 9 o'clock
Power	ON
Reset	Push & Release Reset Button

(b.) Use the "Sigma Start" selector switch on the rod drop test panel to select the Safety Level Composite Amplifier for scram initiation. Use the "Seat Stop" selector switch to select the rod to be checked.

(c.) Raise the selected rod one inch.

Initiate scram by pushing the "Rod Drop" pushbutton on the selected Safety Level Composite Amplifier.

Observe that the timer functioned properly (i.e., the timer read-out should display ~ 110 milliseconds).

Push the "Reset" pushbutton.

Sam S. Hurt III
Reactor Supv. - Operations Div.

K W West
Reactor Controls Dept. I & C Div.

(d.) CAUTION: This step must be done under the supervision of an Operation's Department Foreman or Supervisor.

Raise the rod to be checked to the upper limit switch.

(e.) Push and hold the "Rod Drop" button on the selected Safety Level Composite Amplifier.

Observe the displayed time (in milliseconds) readout.

Record this reading in the operations log book and on Check Sheet No. BSR 203 page 12A.

(f.) Repeat steps (b.) thru (e.) for all rods to be checked.

(g.) Turn the "Sigma Start" and "Seat Stop" switches to "OFF".

Turn the timer power switch "OFF".

7.1.5 Simulation of N_L and N_F Currents

(a.) Remove the J-5 connector from the No. 1, 2, & 3 Level Safety Composite Amplifiers.

(b.) Connect the J-5 test connectors from Test Panel to corresponding amplifiers.

(c.) Install jumpers from the "Sigma Out" to the "Sigma Bus" on Test Panel for the No. 1, 2, & 3 Safety Level Composite Amplifiers.

(d.) Connect a jumper from the Volt Box "Output" connector to the three "Sigma In" connectors on Test Panel.

PROCEDURE NO. BSR 202

PAGE 30

DATE 7/1/68

REVISION 0

Sam S. Hurt III
Reactor Supv. - Operations Div.

K W West
Reactor Controls Dept. I & C Div.

(e.) Adjust the Volt Box to 32 volts (N_F).

Observe that the Safety Recorders read 100.

Read and record the magnet current for each rod on Check Sheet No. BSR 203 page 13A.

(f.) Adjust the Volt Box to 22 volts (N_L).

Observe that the Safety Recorders read zero.

Read and record the magnet current for each rod on Check Sheet No. BSR 203 page 13A.

(g.) Remove the three J-5 test connectors and connect the normal operating J-5 connectors to the No. 1, 2, & 3 Level Safety Composite Amplifiers.

(h.) I & C and Operations' personnel shall verify that all test equipment has been disconnected from the system.

(i.) Adjust the "Preamp Grid Offset" potentiometers on the No. 1, 2, & 3 Level Safety Composite Amplifiers until the corresponding Safety Recorder reads zero.

PROCEDURE NO. BSR 202

PAGE 31

DATE 7/1/68

REVISION 0

Sam S. Hurst III
Reactor Supv. - Operations Div.

K W West
Reactor Controls Dept. I & C Div.

8.1 SAFETY SYSTEM FUNCTIONAL CHECKS

Record steps (b.), (c.) & (f.) on Check Sheet No. BSR 203 page 14.

All rod movements must be made under the direction of the Operations Supervisor.

(a.) Raise all rods to clear seats. Do not raise above 1 inch.

(b.) Push the "Jordon" button on the No. 1 Level Safety Composite Amplifier.

All rods should drop.

(c.) Repeat steps (a.) and (b.) for the No. 2 & 3 Level Safety Composite Amplifiers.

(d.) Turn the selector switch on the Log N Amplifier to the "GROUND" position.

(e.) Raise all rods 1 inch.

(f.) Push and hold the "Scram Test" button on the Log N Amplifier.

All rods should drop.

(g.) Turn the Log N Amplifier selector switch to the "Operate" position.

PROCEDURE NO. BSR 202

PAGE 32

DATE 7/1/68

REVISION 0

Sam S. Hurst III
Reactor Supv. - Operations Div.

K W West
Reactor Controls Dept. I & C Div.

9.1 NUCLEAR RECORDER SWITCHES

See Check Sheet No. BSR 203 pages 15, 16, 17, 18, 19, 20, 21, & 22. The procedure is included on the check sheet to simplify and reduce the amount of time to check the recorder switches.

PROCEDURE NO. BSR 202

PAGE 33

DATE 7/1/68

REVISION 0

Sam S. Hunt III
Reactor Supv. - Operations Div.

K W West
Reactor Controls Dept. I & C Div.

10.1 TROUBLE MONITOR CHECK

Record steps (a.), (c.), (d.), (e.), & (g.) on Check Sheet No. BSR 203 pages 23 & 24.

(a.) Turn the selector switch on the front panel of the Log N Amplifier to the "GROUND" position.

Observe that the "Safety Trouble" annunciator is in an alarm condition, and the Period Channel "Normal" light on the Trouble Monitor Panel is "OFF".

(b.) Turn the selector switch on the Log N Amplifier to the "OPERATE" position.

(c.) Disconnect the "Sigma Bus" connector from one of the Level Safety Composite Amplifiers.

Observe that the "Safety Trouble" annunciator is in an alarm condition, and the Safety "Normal" light on the Trouble Monitor Panel is "OFF".

(d.) Reconnect the "Sigma Bus" connector to the Level Safety Composite Amplifier and repeat steps (c.) and (d.) for the two remaining Level Safety Composite Amplifiers.

(e.) Disconnect the "Sigma Bus" connectors from two of the Level Safety Composite Amplifiers.

Observe that two of the Safety "Normal" lights on the Trouble Monitor Panel are "OFF", and the "Safety Trouble", "Two Safety Trouble" and "Reverse" annunciators are in an alarm condition.

PROCEDURE NO. BSR 202

PAGE 34

DATE 7/1/68

REVISION 0

Sam S. Hurt III
Reactor Supv. - Operations Div.

K W West
Reactor Controls Dept. I & C Div.

(f.) Reconnect the "Sigma Bus" connectors to the Level Safety Composite Amplifiers.

(g.) Observe that all "Normal" lights on the Trouble Monitor Panel are "ON", and annunciators in a clear condition.

PROCEDURE NO. BSR 202

PAGE 35

DATE 7/1/68

REVISION 0

Sam S. Hurt III
Reactor Supv. - Operations Div.

K W West
Reactor Controls Dept. I & C Div

11.1 MANUAL SCRAMS

Record on Check Sheet No. BSR 203 page 25.

Initiate a scram at each of the following scram pushbutton stations. Observe that the MU (Makeup) and DO (Dropout) lights on the Control Room Console come "ON", and the "Slow Scram" annunciator alarms for each scram. Operate the "Reset" switch following each scram test.

(1.) Local- No. 1 Station - BSR Console

(2.) Remote- No. 2 Station - ORR Console

(3.) No. 3 Station - East side of high bay area

(4.) No. 4 Station - East side of high bay area

(5.) No. 5 Station - West side of high bay area

(6.) No. 6 Station - West side of high bay area

(7.) No. 7 Station - Rest Room

(8.) No. 8 Station - Bldg. 3010 Annex

(9.) No. 9 Station - Bldg. 3080

(10.) Raise-Test Switch - BSR Console (Place switch in "RAISE" position.)

(11.) Control Power Key Switch - BSR Console (Place switch in "OFF" position).

PROCEDURE NO. BSR 202

PAGE 36

DATE 7/1/68

REVISION 0

Sam S. Hurt III
Reactor Supv. - Operations Div.

K W West
Reactor Controls Dept. I & C Div.

12.1 ANNUNCIATORS

Record on Check Sheet BSR 203 pages 26 & 27.

Check the annunciators according to the schedule below.

ANNUNCIATOR & TITLE	CONDITIONS REQUIRED TO OBTAIN ALARM
C1 - Log N Reverse	Log N recorder > μμ Ammeter range (No negative period)
C2 - Two Safety Trouble	Two level safetys out of service
C3 - Safety Trouble	One level safety out of service
C4 - 20%N_F Not in Run	Log N > 20 not in Run (μμ Ammeter < 2 Mw)
C8 - Shim Request	Reg. Rod Span in U. L. while in servo
C11 - Recorder Power Off	Turn off any recorder power
D1 - Flapper Mid Position	Flapper between Open & Closed
D2 - Low Δ P	Flapper closed with zero flow
D3 - Radiation & Contamination	Radiation level > set point
*D4 - Monitron Hi Level	Radiation level > set point.
D5 - Log N τ < 7 sec.	Log N Period recorder < 7 sec.
D6 - Setback	Safety Level recorder > 55, flapper open
D7 - Slow Scram	Manual slow scram
D8 - Pool Level Low	Apply air source to pool level switches housing.
D9 - Low Flow	No coolant flow, flapper closed
D10 - Jet Off	Turn off jet flow in convection mode

*CAUTION: Hold containment bypass switch while testing this annunciator.

PROCEDURE NO. BSR 202

PAGE 37

DATE 7/1/68

REVISION 0

Sam S. Hurt III
Reactor Supv. - Operations Div.

K W West
Reactor Controls Dept. I & C Div.

ANNUNCIATOR & TITLE	CONDITIONS REQUIRED TO OBTAIN ALARM
D12 - CR τ < 7 sec.	Count Rate Period recorder < 7 sec.
D13 - Reverse	Safety Level recorder > 60, flapper open
D14 - Fast Scram	Sigma Level > 135% (35.5 volts input)
G1 - Sec. Coolant pH Hi	pH > set point
G2 - Tower Basin Lo Temp.	Temp. > 60° F
G3 - Tower Basin Hi Temp.	Temp. > 89° F
G5 - Decay Tank Hi/Lo Level	Level > 160"
G6 - Decay Tank Hi Radiation	Radiation > set point
G7 - PCA Control Room Temp. Hi	Room Temp. > 85° F
G8 - Resistivity Lo	Resistivity < $.3 \times 10^6$
G10 - Sec. Coolant Lo Flow	Flow < 300 gpm
G11 - Pri Inlet Hi Temp.	Temp. > 105° F
G12 - Pool Outlet Hi Radiation	Radiation > set point
G13 - Reactor Core Hi Δ T	Δ T > 17° F

PROCEDURE NO. BSR 202

PAGE 38

DATE 7/1/68

REVISION 0

Sam S. Hurt III
Reactor Supv. - Operations Div.

K W West
Reactor Controls Dept. I & C Div.

13.1 LEVEL SAFETY CHAMBER H.V. POWER SUPPLY TEST

This test is to verify that the H.V. Power Supply for each Safety Chamber will deliver 0.9 milliamperes. This is 20 times greater than the normal operating current of 45 microamperes at full power.

(a.) Disconnect the "B+ Return" cable from the No. 1 Composite Amplifier.

(b.) Connect this cable to the "Level Safety Power Supply" Test Box.

(c.) The current meter on the "Level Safety Power Supply" Test Box should read 0.9 Ma ± 10%.

(d.) Repeat steps (a.), (b.), and (c.) for the No. 2 & No. 3 Composite Amplifiers.

Record steps (c.) & (d.) on Check Sheet No. BSR 203 page 28.

PROCEDURE NO. BSR 202

PAGE 39

DATE 7/1/68

REVISION 0

Sam S. Hunt III
Reactor Supv. - Operations Div.

K W West
Reactor Controls Dept. I & C Div.

14.1 RESTORATION OF SYSTEM

Operations and I & C Personnel shall verify that all cables are connected for normal operating conditions, and all test equipment has been disconnected from the system.

Record on Check Sheet No. BSR 203 page 29.

PROCEDURE NO. BSR 202

PAGE 40

DATE 11/21/68

REVISION 0

Sam S. Hurt III
Reactor Supv. - Operations Div.

K W West
Reactor Controls Dept. I & C Div.

15.1 IONIZATION CHAMBER SATURATION CHARACTERISTICS

These measurements are to be made during reactor operation at full power and with all nuclear control and safety channels in operation.

CAUTION: These measurements may be made only under the direct supervision of the reactor supervisor and the I & C field engineer.

(a.) Disconnect the No. 1 Level Safety Composite Amplifier from the sigma bus. Note that "Safety Trouble" is annunciated.

(b.) Turn OFF the No. 1 Safety Recorder.

(c.) Disconnect the Period Composite Amplifier from the sigma bus.

(d.) Turn OFF the Log N level and period recorders.

(e.) Turn the selector switch on the Log N Amplifier to the "GROUND" position.

(f.) Disconnect the Burndy cable connector from the PCP - III Type 106 Interconnecting Junction Box at the reactor bridge box and connect this cable to the "Saturation Curve Test Unit".

(g.) Connect the portable picoammeter and variable voltage power supply to the "Saturation Curve Test Unit".

(h.) Read and record the current on Check Sheet No. BSR 203 page 30 and plot the corresponding curves on Check Sheets No. BSR 203 pages 31A, 31B, & 31C.

Note: Continue to raise the applied voltage until two current readings are identical at potentials 100 volts apart but do not exceed 800 volts.

Sam S. Hart III
Reactor Supv. - Operations Div.

K W West
Reactor Controls Dept. I & C Div.

(i.) Saturation curve analysis for uncompensated safety chambers. Reactor Controls Department personnel shall verify that the saturation curves fall within accepted limits as follows:

(1.) At normal operating voltage the current shall be > 95% of the 100% saturated plateau.

(2.) At 100 volts less than normal operating voltage, the current shall be > 90% of the 100% saturated plateau.

(3.) The slope, in the unsaturated portion of the curve above 20 volts, shall always be positive and the curve shall be continuous.

Note: Repeat steps (a.) thru (i.) for No. 2 & No. 3 chambers. Refer to Maintenance Schedule BSR 201 before proceeding.

(j.) Apply normal operating voltage via the variable voltage power supply and insert the chamber to 1.5 times normal operating current.

(k.) Repeat step (h.).

(l.) Apply normal operating voltage via the variable voltage power supply and insert the chamber to 10.0 times normal operating current (or the mechanical insert limit which ever occurs first).

(m.) Repeat step (h.).

(n.) Reposition chamber for normal operating current with normal operating voltage applied.

PROCEDURE NO. BSR 202

PAGE 42

DATE 11/21/66

REVISION 0

Sam S. Hurt III
Reactor Supv. - Operations Div.

K W West
Reactor Controls Dept. I & C Div.

(o.) Remove the "Saturation Curve Test Unit" and restore the chamber cable connector to normal.

(p.) Turn on the No. 1 Safety recorder and, if necessary, reposition the chamber for 100% reading.

(q.) Turn the Log N Amplifier selector switch to "OPERATE" position.

(r.) Turn on the Log N Level and Period recorders and verify for proper reading.

(s.) Reconnect the Period Composite to the sigma bus.

(t.) Reconnect the No. 1 Level Composite to the sigma bus.

(u.) Verify that all Trouble Monitor lamps and annunciators are normal.

Note: Repeat steps (j.) thru (u.) for the No. 2 & No. 3 chambers in accordance with Maintenance Schedule BSR 201.

BULK SHIELDING REACTOR

CHECK SHEET NO. BSR 203

TO BE USED WITH PROCEDURE NO. BSR 202

PROCEDURE APPROVAL:

Sam S. Hurt III
Reactor Supv. - Operations Div.

K W West
Reactor Controls Dept. I & C Div.

DATE OF CHECK _____

PERFORMED BY _____

INSPECTED BY TECHNICIAN _____

APPROVED BY I&C FOREMAN _____

ACCEPTED BY _____
Operations Supv.

CHECK SHEET NO. BSR 203
Procedure Reference: Section 1.1
Parts - 1.1.1, 1.1.2, 1.1.3

Reactor Supv. - Operations Div.

Reactor Controls Dept. I & C Div.

PAGE 1

DATE 7/1/68

REVISION 0

Part 1.1.1 - Chamber Leakage	Level Safeties #1	Level Safeties #2	Level Safeties #3	Log N	Servo
Chamber Leakage (Amps)					

Part 1.1.2 - Clutch & Seat Switch Leakage	Shim Rod #1	#2	#3	#4	#5	#6
Across Seat Switch (open) (Ω)						
Seat Switch to Gnd. (open)(Lead #1) (Ω)						
Seat Switch to Gnd. (open)(Lead #2) (Ω)						
Across clutch switch (open)("J" to "K") (Ω)						
Clutch Switch to Gnd. (open)("J" Lead) (Ω)						
Clutch Switch to Gnd. (open)("K" Lead) (Ω)						

Part 1.1.3 - Magnet Resistance Check	Shim Rod #1	#2	#3	#4	#5	#6
Across Magnet (Ω)						
Magnet to Gnd. at 500 volts (MΩ)						

Comments: _____

Date _____ By _____

Sam S. Hurt
Reactor Supv. - Operations Div.

K W West
Reactor Controls Dept. I & C Div.

CHECK SHEET NO. BSR 203

PROCEDURE REFERENCE: SEC. 2.1

PAGE 2A

DATE 7/1/68

REVISION 0

BSR RECORDER CALIBRATION & MAINTENANCE CHECK SHEET

Recorder	Span	Span as Found	Calibrated	Cleaned & Oiled	Reference	Slidewire	Drive Cable	Tubes	Balance Motor Time F. S.	Date	Initial
No. 1 Safety Level	0 - 10 MV.										
No. 2 Safety Level	0 - 10 MV.										
No. 3 Safety Level	0 - 10 MV.										
Log N	0 - 10 MV.										
Log N Period	-.9/9.1 MV.										
CRM	0 - 10 MV.										
CRM Period	-.9/9.1 MV.										
Servo	0 - 9 MV.										
Reg. Rod Pos.	1 - 9 MV.										
PR-5	0 - 10 MV.										
TR-16	0 - 150°F										
FR-10	10-50 ma										

CHECK SHEET NO. BSR 203

PROCEDURE REFERENCE: Sec. 2.1

Sam S. Hurst
Reactor Supv. - Operations Div.

K W West
Reactor Controls Dept. I & C Div.

PAGE 2B

DATE 7/1/68

REVISION 0

BSR RECORDER CALIBRATION & MAINTENANCE CHECK SHEET

Recorder	Span	Span as Found	Calibrated	Cleaned & Oiled	Reference	Slidewire	Drive Cable	Tubes	Balance Motor Time F. S.	Date	Initial
TdR-17	10 - 50 ma										
PdR-22	10 - 50 ma										
TR-13	3 - 15 PSI										
Basin Temp.	3 - 15 PSI										
Sec. Flow											

CHECK SHEET NO. BSR 203

PAGE 3

DATE 7/1/68

REVISION 0

Sam S. Hurt III
Reactor Supv. - Operations Div.

K W West
Reactor Controls Dept. I & C Div.

3.1 COUNT RATE CHANNEL TESTS

3.1.1 Log Count Rate Meter

	Should Read	Adjusted Reading
(b.) Log Count Rate Meter Recorder	60	_____

	Should Read	Adjusted Reading
(e.) Log Count Rate Meter Recorder	1000	_____

(k.)

Setting on Period Simulator	LCR Period Recorder Should Read	LCR Period Recorder Reads
30 sec.	30 ± 5 sec.	_____
7 sec.	7 ± 1/2 sec. . . .	_____
5 sec.	5 ± 1/2 sec. . . .	_____
3 sec.	3 - 1/2 sec. . . .	_____

CHECK SHEET NO. BSR 203

PAGE 4

PROCEDURE REFERENCE: Section 3.1
Part 3.1.2

DATE 7/1/68

REVISION 0

Sam S. Hurt III
Reactor Supv. - Operations Div.

K W West
Reactor Controls Dept. I & C Div.

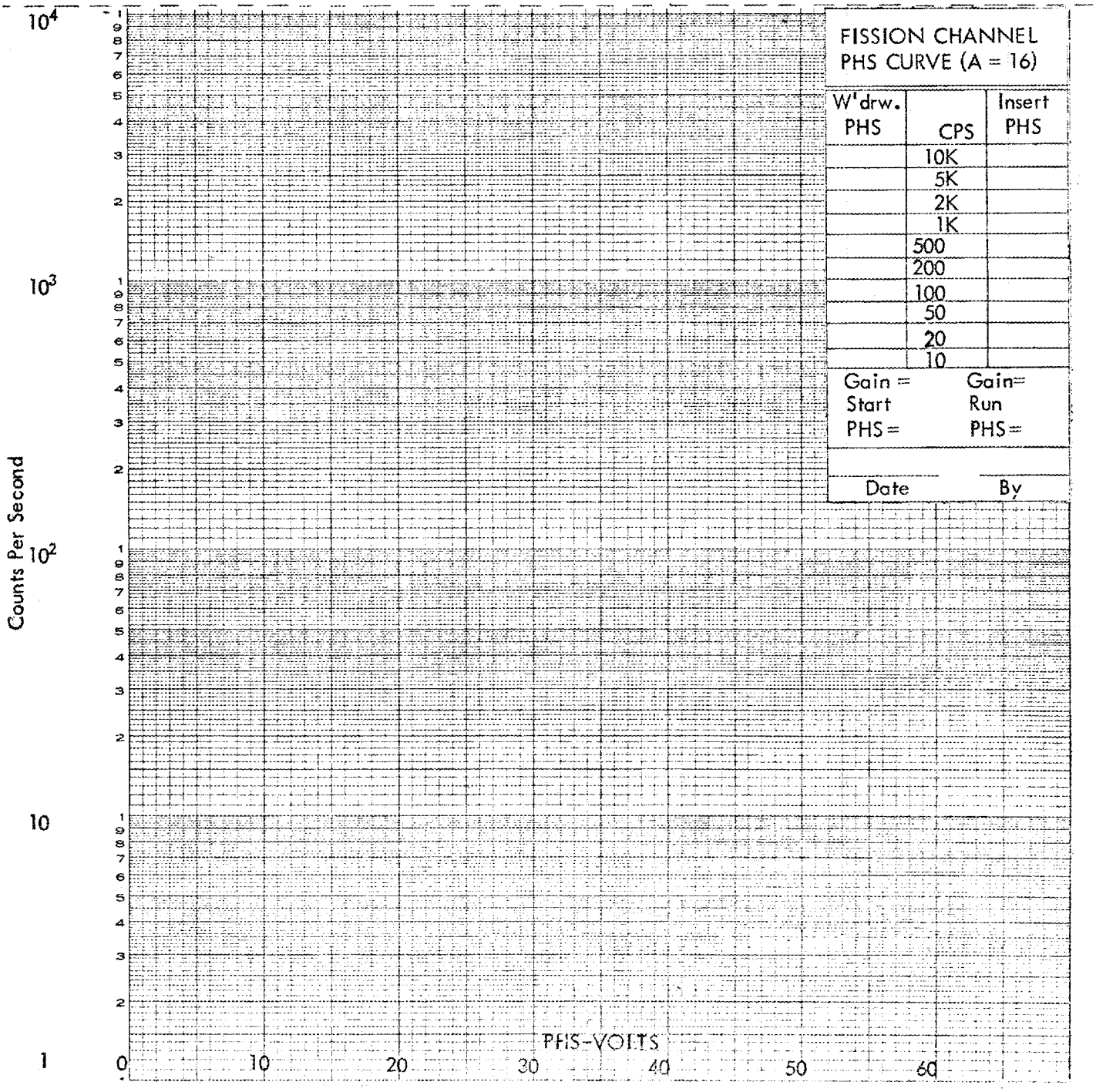

FISSION CHANNEL
PHS CURVE (A = 16)

W'drw. PHS	CPS	Insert PHS
	10K	
	5K	
	2K	
	1K	
	500	
	200	
	100	
	50	
	20	
	10	

Gain = Start PHS =

Gain= Run PHS =

Date By

CHECK SHEET NO. BSR 203

PAGE 5

DATE 7/1/68

REVISION 0

Sam S. Hurt III
Reactor Supv. - Operations Div.

K W West
Reactor Controls Dept. I & C Div.

4.1 LOG N CHANNEL TESTS

4.1.1 Sigma Output Check

(d.) Volt Box adjusted to 37 volts.

	Should Read	Actual Reading
Panel Meter on Composite Amplifier	150 ± 2%	_____

(f.) Volt Box adjusted to 22 volts.

	Should Read	Actual Reading
Sigma Bus Voltage	38 v ± 1	_____

(g.) Volt Box adjusted to 32 volts.

	Should Read	Actual Reading
Sigma Bus Voltage	39 v ± 1	_____

(h.) Volt Box adjusted to 37 volts and Sigma Bus cable disconnected from connector J-6 on Composite Amplifier.

	Should Read	Actual Reading
Sigma Bus Voltage	>43.5 v.	_____

COMMENTS:

4.1.2 Period Amplifier D.C. Level

	Adjusted Reading
(b.) Digital Voltmeter should read 22 volts	_____

COMMENTS:

CHECK SHEET NO. BSR 203

PAGE 6

DATE 7/1/68

REVISION 0

Sam S. Hurt III
Reactor Supv. - Operations Div.

K W West
Reactor Controls Dept. I & C Div.

4.1.3 Log N and Period Amplifiers

(i.) Set Chamber Simulator to values below.

Setting & Current Source Value (Amps.)		Recorder Reading	Meter Reading
.0001	(5×10^{-11})		
.001	(5×10^{-10})		
.01	(5×10^{-9})		
.1	(5×10^{-8})		
1.0	(5×10^{-7})		
10.0	(5×10^{-6})		
100.0	(5×10^{-5})		

(p.) Set Period Simulator to values below.

Setting on Period Simulator	Log N Period Recorder Reading	Meter Reading	Period Sigma Output
30 sec.			
7 sec.			
5 sec.			
3 sec.			
1 sec.			

COMMENTS:

CHECK SHEET NO. BSR 203

PAGE 7

DATE 7/1/68

REVISION 0

Sam S. Hurt III
Reactor Supv. - Operations Div.

K W West
Reactor Controls Dept. I & C Div.

5.1 SAFETY SYSTEM TESTS

5.1.1 Level Safety Test

(d.) Adjust Volt Box to 22 volts.

	Should Read	Adjusted Reading
Level Safety Recorder No. 1	0	
Level Safety Recorder No. 2	0	
Level Safety Recorder No. 3	0	

(e.) Adjust Volt Box to 32 volts.

	Should Read	Adjusted Reading
Level Safety Recorder No. 1	100	
Level Safety Recorder No. 2	100	
Level Safety Recorder No. 3	100	

(g.) Adjust Volt Box to 37 volts.

	Should Read	Actual Reading
Level Safety Recorder No. 1	150 ± 2	
Level Safety Recorder No. 2	150 ± 2	
Level Safety Recorder No. 3	150 ± 2	

CHECK SHEET NO. BSR 203

PAGE 8

DATE 7/1/68

REVISION 0

Sam S. Hurst III
Reactor Supv. - Operations Div.

K W West
Reactor Controls Dept. I & C Div.

(h.) Adjust Volt Box to 35 volts. Push "scram reset" button on Composite Amplifiers.

No. 1 Composite Amp. "Normal" scram light . . . ON____ OFF_____

No. 2 Composite Amp. "Normal" scram light . . . ON____ OFF_____

No. 3 Composite Amp. "Normal" scram light . . . ON____ OFF_____

Adjust the Volt Box to 35.5 volts.

No. 1 Composite Amp. "Abnormal" scram light . . ON____ OFF_____

No. 2 Composite Amp. "Abnormal" scram light . . ON____ OFF_____

No. 3 Composite Amp. "Abnormal" scram light . . ON____ OFF_____

(k.) Adjust "Preamp. Grid Offset" potentiometer to give zero reading on Level Safety Recorders.

	Should Read	Adjusted Reading
Level Safety Recorder No. 1	0	_____
Level Safety Recorder No. 2	0	_____
Level Safety Recorder No. 3	0	_____

ADJUSTMENTS & COMMENTS:

CHECK SHEET NO. BSR 203 PAGE 9A

PROCEDURE REFERENCE: Section 5.1 DATE 7/1/68

Part 5.1.2 REVISION 0

Reactor Supv. - Operations Div.

Reactor Controls Dept. I & C Div.

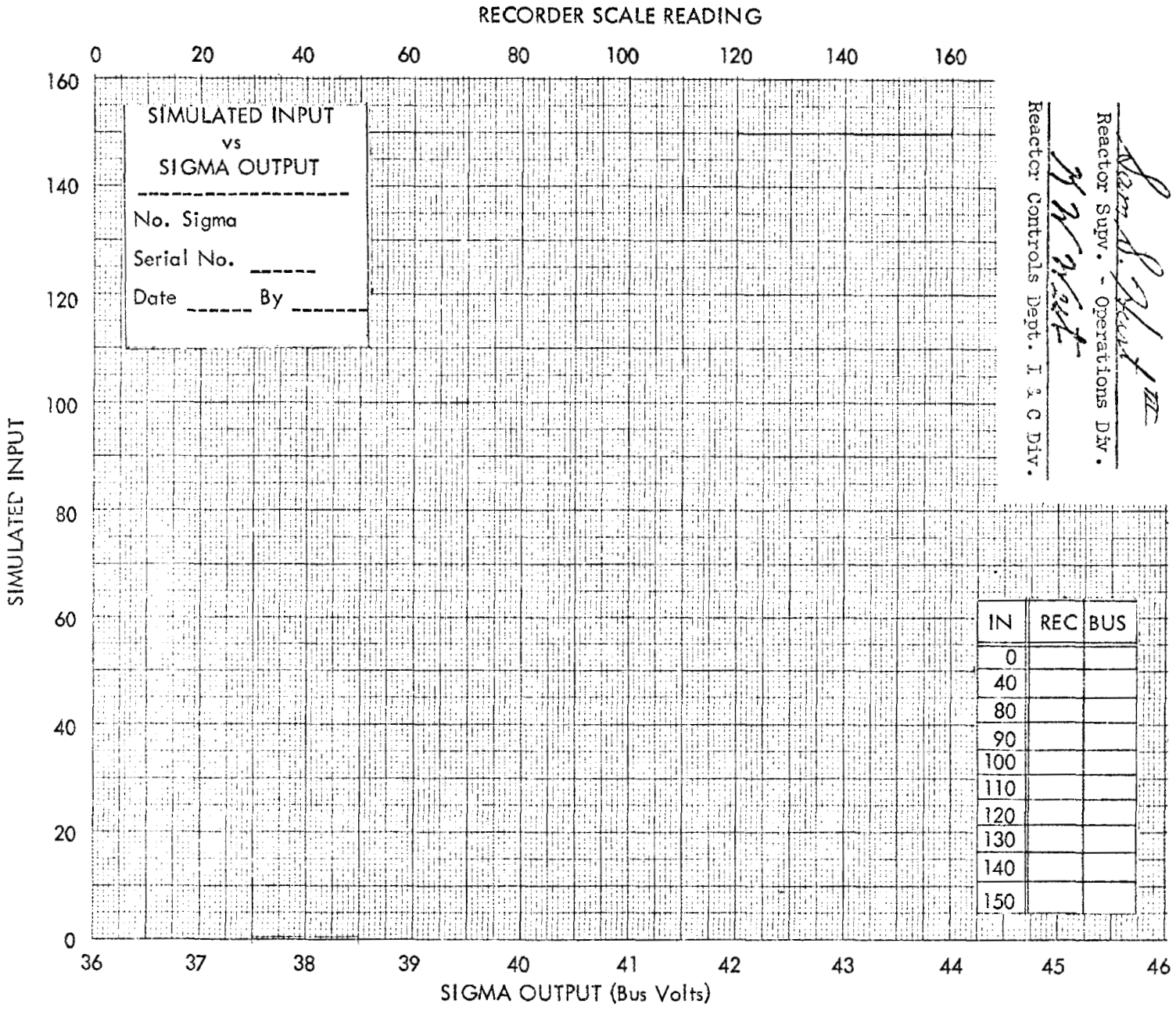

IN	REC	BUS
0		
40		
80		
90		
100		
110		
120		
130		
140		
150		

CHECK SHEET NO. BSR 203

PROCEDURE REFERENCE: Section 5.1
Part 5.1.2

PAGE 93

DATE 7/1/68

REVISION 0

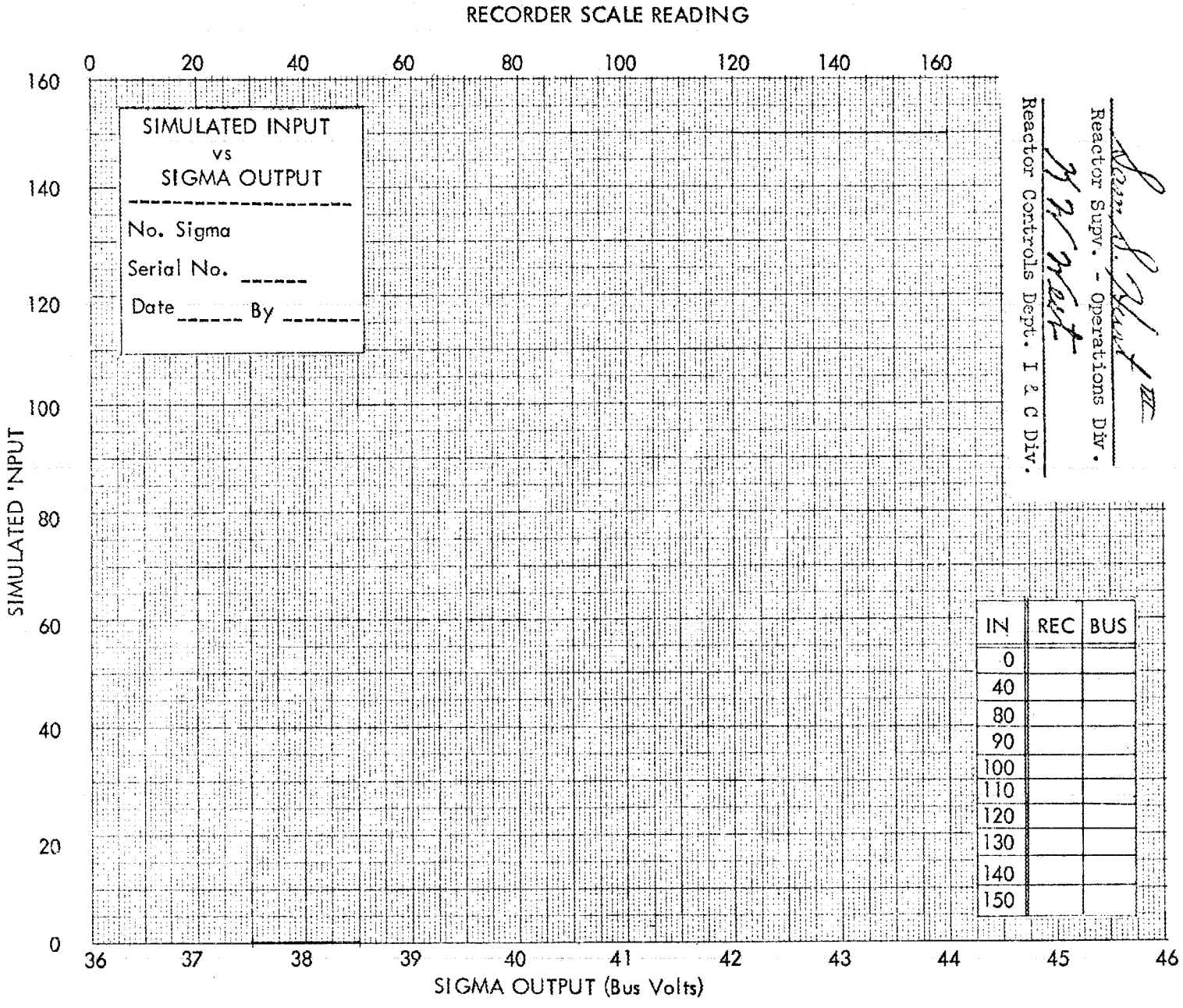

IN	REC	BUS
0		
40		
80		
90		
100		
110		
120		
130		
140		
150		

Reactor Supv. - Operations Div.

Reactor Controls Dept. I & C Div.

CHECK SHEET NO. BSR 203 PAGE 90

PROCEDURE REFERENCE: Section 5.1 DATE 7/1/68

Part 5.1.2 REVISION 0

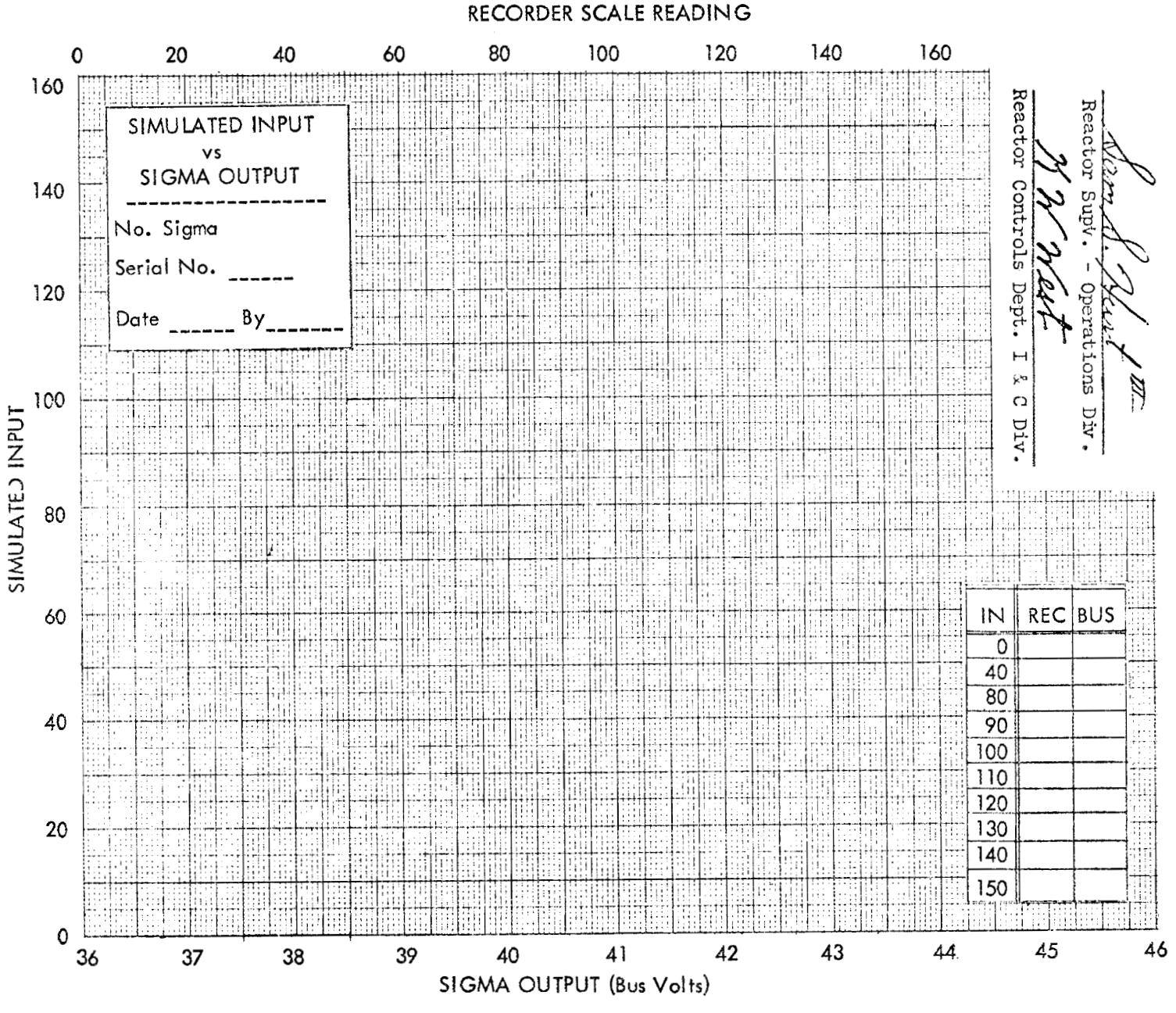

IN	REC	BUS
0		
40		
80		
90		
100		
110		
120		
130		
140		
150		

Reactor Supv. - Operations Div.

Reactor Controls Dept. I & C Div.

CHECK SHEET NO. BSR 203

PAGE 10A

PROCEDURE REFERENCE: Section 5.1
Part 5.1.3

DATE 7/1/68

REVISION 0

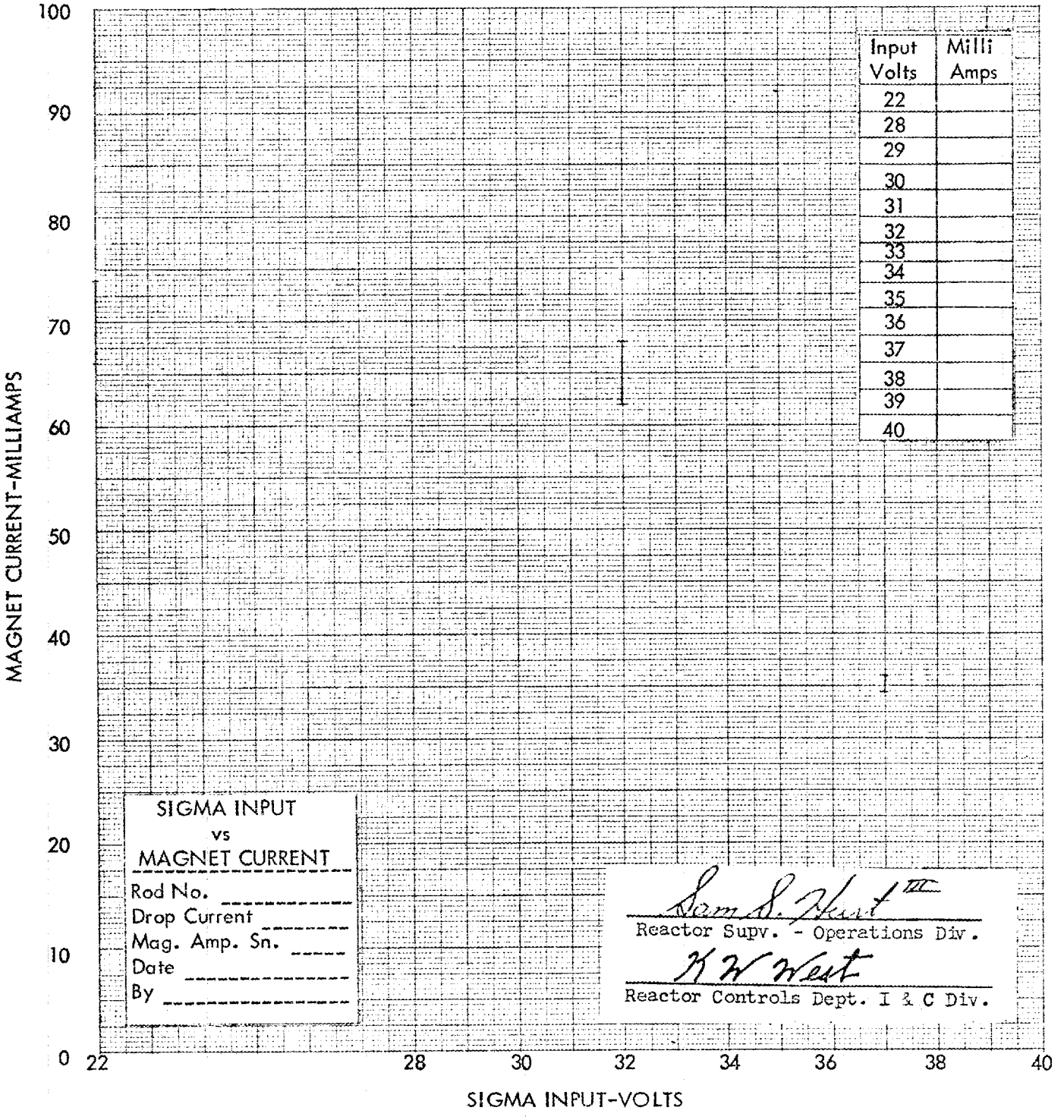

Input Volts	Milli Amps
22	
28	
29	
30	
31	
32	
33	
34	
35	
36	
37	
38	
39	
40	

PAGE 10B

CHECK SHEET NO. BSR 203

DATE 7/1/68

PROCEDURE REFERENCE: Section 5.1
Part 5.1.3

REVISION

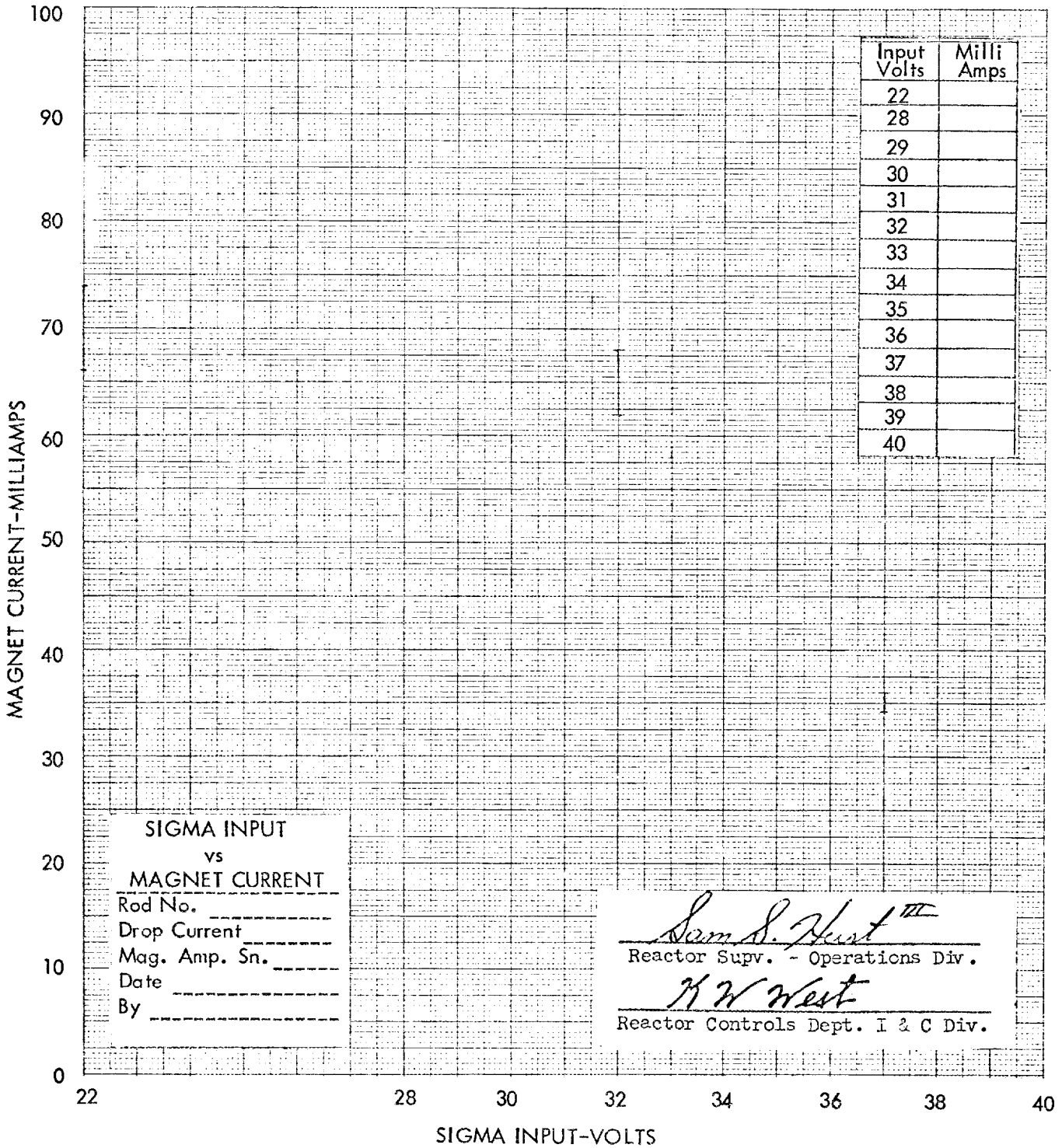

Input Volts	Milli Amps
22	
28	
29	
30	
31	
32	
33	
34	
35	
36	
37	
38	
39	
40	

CHECK SHEET NO. BSR 203

PAGE 10c

PROCEDURE REFERENCE: Section 5.1
Part 5.1.3

DATE 7/1/68

REVISION 0

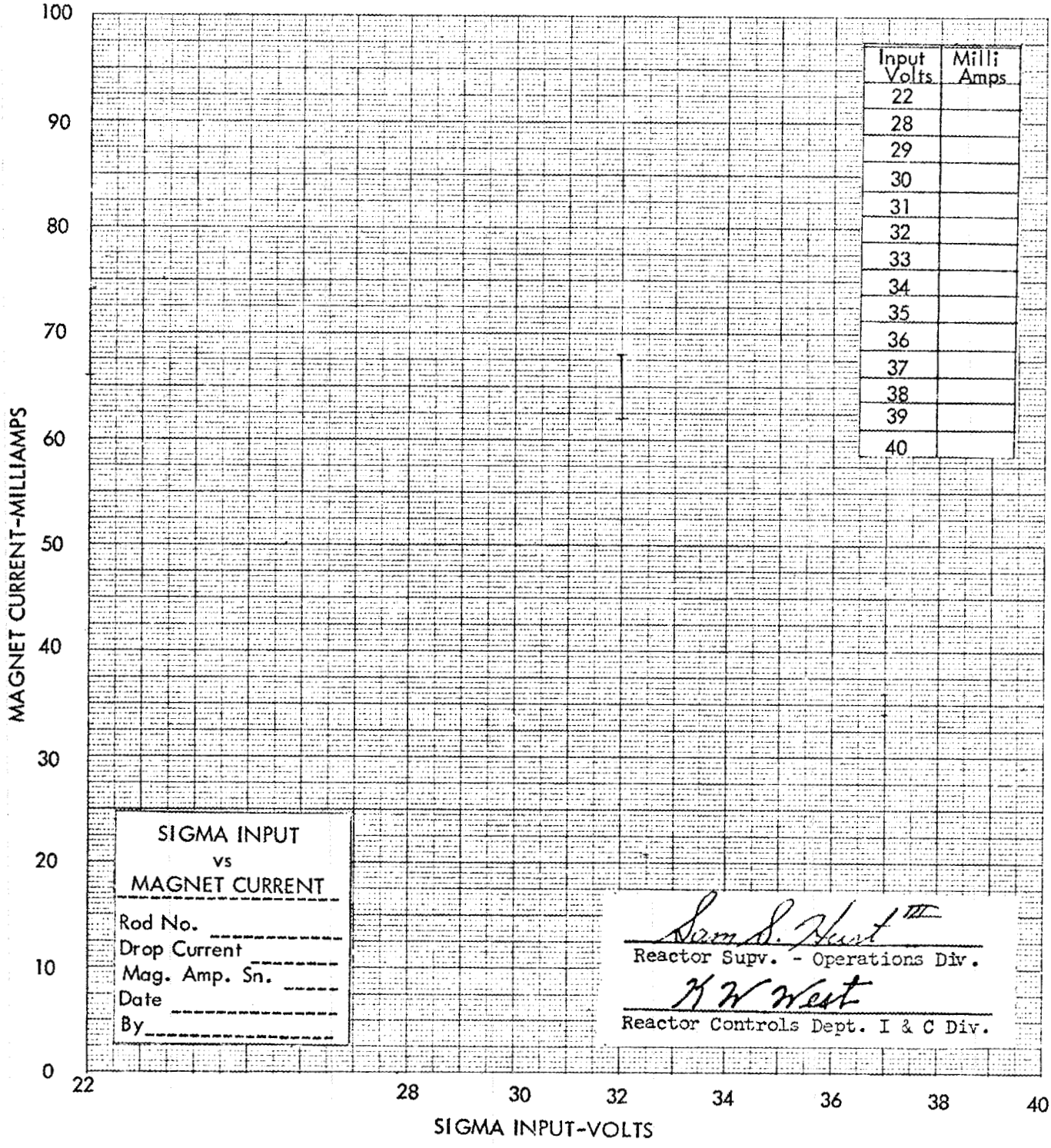

Input Volts	Milli Amps
22	
28	
29	
30	
31	
32	
33	
34	
35	
36	
37	
38	
39	
40	

CHECK SHEET NO. BSR 203

PAGE 10D

PROCEDURE REFERENCE: Section 5.1
Part 5.1.3

DATE 7/1/68

REVISION 0

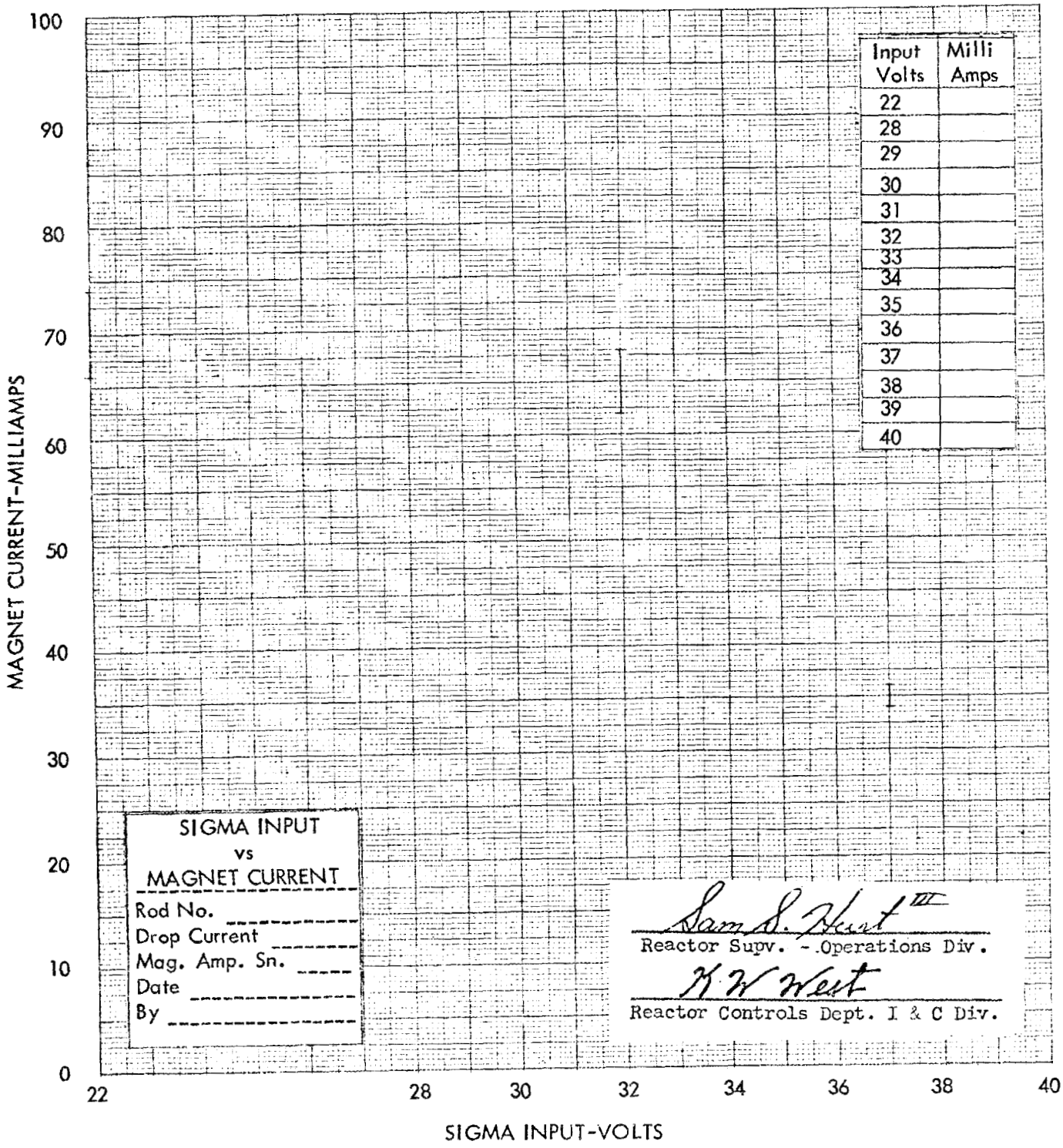

Input Volts	Milli Amps
22	
28	
29	
30	
31	
32	
33	
34	
35	
36	
37	
38	
39	
40	

CHECK SHEET NO. BSR 203

PAGE 10

PROCEDURE REFERENCE: Section 5.1
Part 5.1.3

DATE 7/1/68

REVISION 0

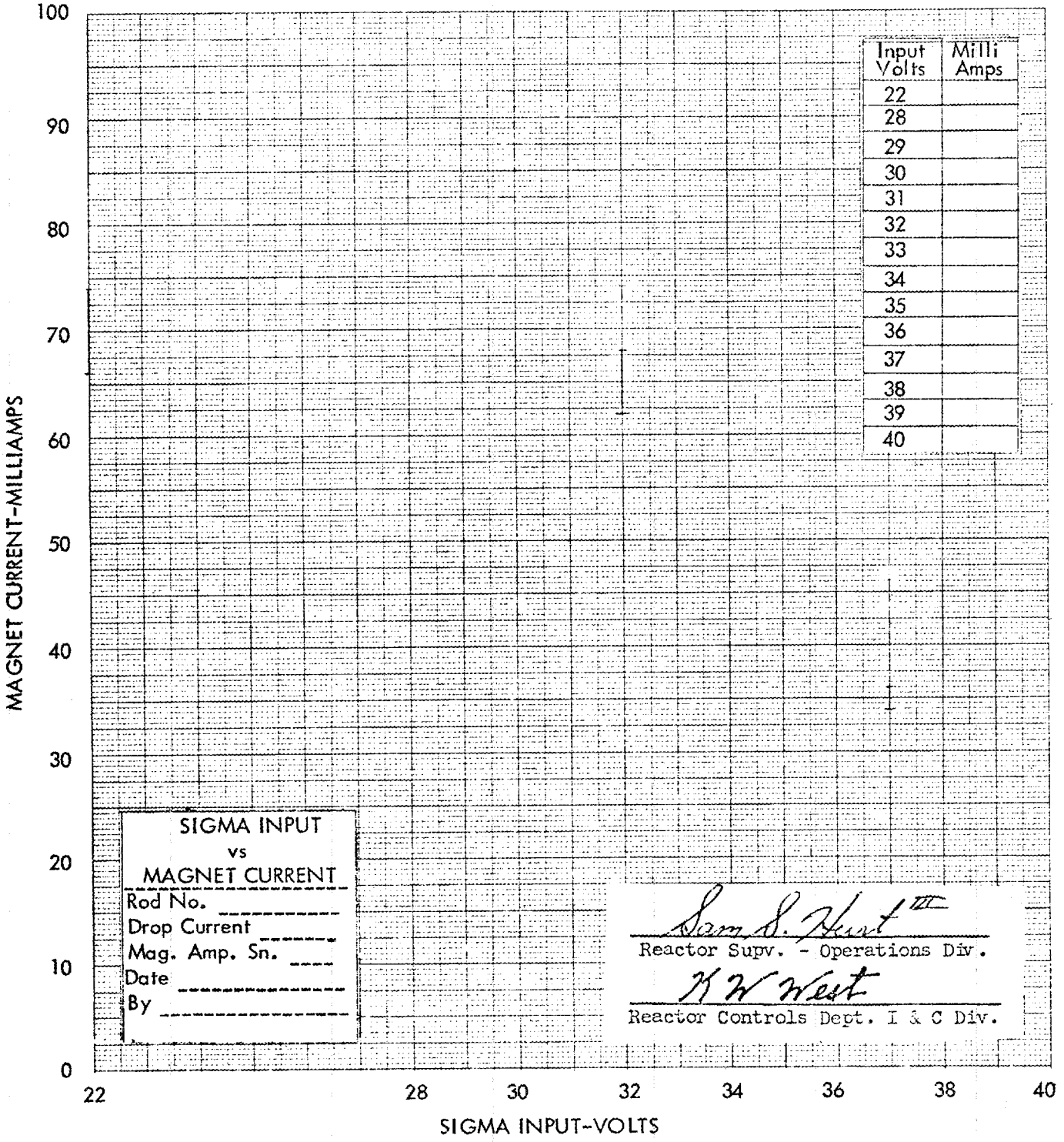

Input Volts	Milli Amps
22	
28	
29	
30	
31	
32	
33	
34	
35	
36	
37	
38	
39	
40	

CHECK SHEET NO. BSR 203

PAGE 1 OF

PROCEDURE REFERENCE: Section 5.1
Part 5.1.3

DATE 7/1/68

REVISION 0

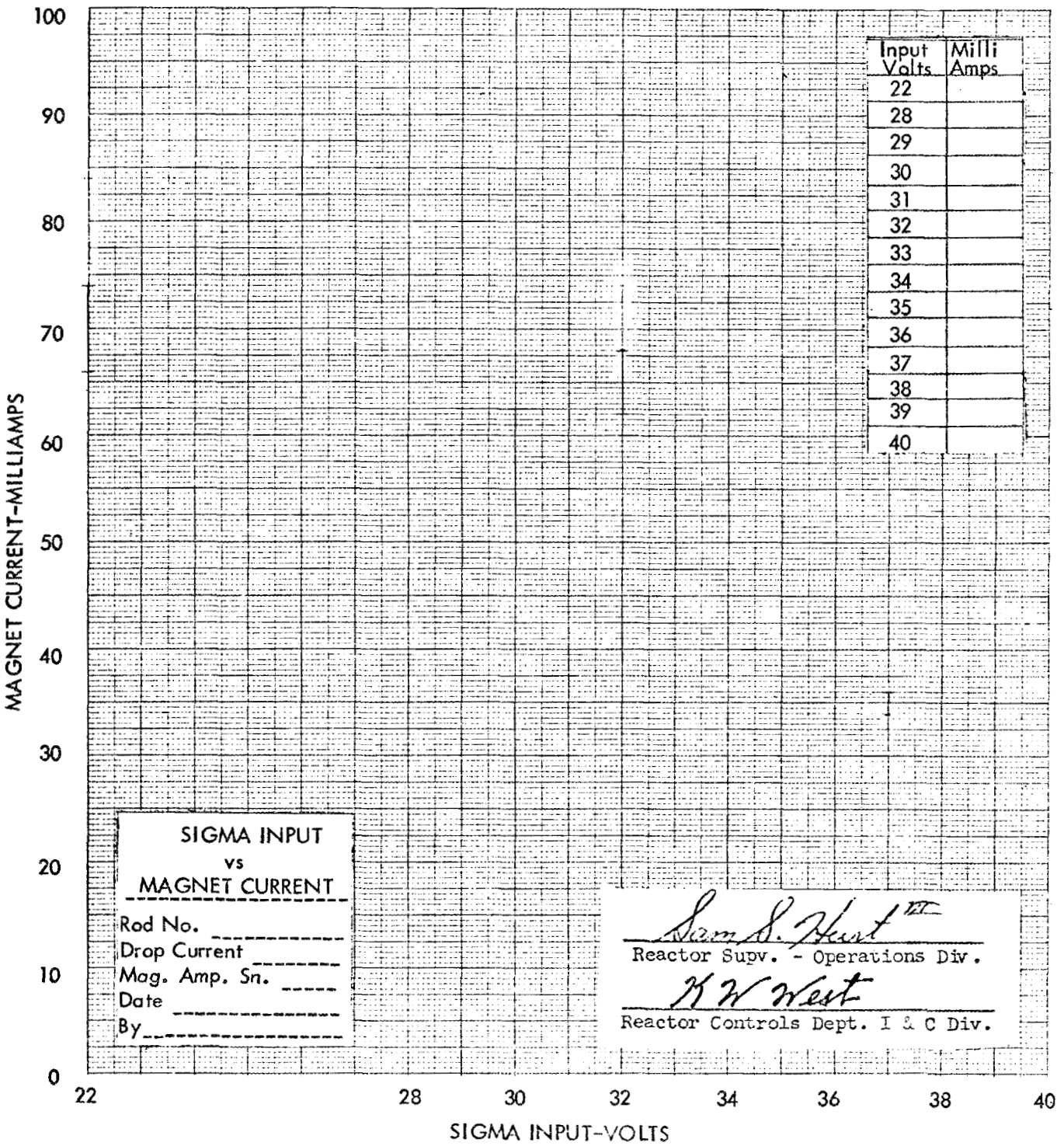

Input Volts	Milli Amps
22	
28	
29	
30	
31	
32	
33	
34	
35	
36	
37	
38	
39	
40	

CHECK SHEET NO. BSR 203

PAGE 11

DATE 7/1/68

REVISION 0

Sam S. Hurst III
Reactor Supv. - Operations Div.

K W West
Reactor Controls Dept. I & C Div.

6.1 SERVO CHANNEL TESTS

6.1.1 Servo Amplifier & μμ Ammeter Test

(d.) Input Current 2.25×10^{-8} Amperes.

"Insert Light" . . . . . ON _____ OFF _____

(e.) Demand raised until both "Insert" and "Withdraw" lights are "OFF".

Demand Should Be	Actual Demand
50 ± 2%	_____

(f.) Lower Demand ~ 1%.

"Insert" Light . . . . . ON _____ OFF _____

(g.) Demand raised until both "Insert" and "Withdraw" lights are "OFF".

Demand Should Be	Actual Demand
50 ± 2%	_____

(h.) Raise Demand ~ 1%.

"Withdraw" Light. . . . . .ON _____ OFF _____

(i.) Check the μμ Ammeter with input currents as follows:

Input Current	Meter	Range
4.5×10^{-9} Amps.	_____	_____
4.5×10^{-8} Amps.	_____	_____
4.5×10^{-7} Amps.	_____	_____
4.5×10^{-6} Amps.	_____	_____
4.5×10^{-5} Amps.	_____	_____

CHECK SHEET NO. ESR 203

PAGE 12

DATE 7/1/68

REVISION 0

Sam S. Hunt III
Reactor Supv. - Operations Div.

K W West
Reactor Controls Dept. I & C Div.

COMMENTS:

6.1.2 Regulating Rod Test

(f.) Demand lowered to ~ 49%.

Regulating Rod Synchro shows . . . WITHDRAW _____ INSERT _____

(g.) Demand raised to ~ 51%.

Regulating Rod Synchro shows . . . WITHDRAW _____ INSERT _____

COMMENTS:

CHECK SHEET NO. BSR 203

PAGE 13A

PROCEDURE REFERENCE: Section 7.1
Parts 7.1.1,
7.1.2. 7.1.3, 7.1.4, 7.1.5

DATE 7/1/68

REVISION 0

Sam S. Hurt III
Reactor Supv. - Operations Div.

K W West
Reactor Controls Dept. I & C Div.

SHIM ROD TEST SHEET

Checkout Description		SHIM ROD TEST SHEET					
		1	2	3	4	5	6
Safety-level drop point with shim rods withdrawn 3 in. (145 ± 5%)*	1						
	2						
	3						
Drop current (ma) with shim rods withdrawn:	3"						
	12"						
	U. L.						
Simulated N_L current (ma)	1						
	2						
	3						
Simulated N_F current (ma)	1						
	2						
	3						
Shim-rod-release time (msec) with shim rods withdrawn 3 in.	1						
	2						
	3						
Shim rod time of flight (msec) with each shim rod at upper limit	1						
	2						
	3						
Upper limit - inches above clutch							
Lower limit - inches below clutch							

*Safety channel No. _____ used for above drop point.

Date _____ By _____

CHECK SHEET NO. BSR 203

PAGE 13B

DATE 7/1/68

REVISION 0

Sam S. Hurt III
Reactor Supv. - Operations Div.

K W West
Reactor Controls Dept. I & C Div.

BSR Rod Number		1	2	3	4	5	6
Drop Point	(%)						
Drop Current	(m-amp)						
N_L Current	(m-amp)						
N_F Current	(m-amp)						
Release Time	(m-sec)						
Time of Flight	(m-sec)						

Date: _____ By: _____

CHECK SHEET NO. BSR 203

PAGE 14

DATE 7/1/68

REVISION 0

Sam S. Hart III
Reactor Supv. - Operations Div.

K W West
Reactor Controls Dept. I & C Div.

8.1 SAFETY SYSTEM FUNCTIONAL CHECKS

(b.) Push "Jordan button" on No. 1 Level Safety Composite Amplifier.

All Rods Drop _____ Rods that Failed to Drop _____

(c.) No. 2 Level Safety Composite Amplifier

All Rods Drop _____ Rods that Failed to Drop _____

No. 3 Level Safety Composite Amplifier

All Rods Drop _____ Rods that Failed to Drop _____

(f.) Push and hold "Fast Period" test button on the Log N Amplifier.

All Rods Drop _____ Rods that Failed to Drop _____

COMMENTS:

CHECK SHEET NO. BSR 203

PAGE 15

DATE 1/15/69

REVISION 1

Sam S. Hurst III
Reactor Supv. - Operations Div.

K W West
Reactor Controls Dept. I & C Div.

9.1 NUCLEAR RECORDER SWITCHES

The following conditions must exist before making these checks.

(1.) Control Power Key Switch (S1) "ON".

(2.) Shim safety rod motion switches (S6, 7, 8, 9, 20, 21) in the "OFF" position.

(3.) Group actuate switch (S4) in "Hold" position.

(4.) No "Reverse" and no "Setback".

(5.) All Trouble Monitor lights "ON".

(6.) Reactor in "Slow Scram".

9.1.1 Log N and Log Count Rate Recorders

(a.) Turn the "Cal.-Use" switch on the Log Count Rate Meter to the "Cal." position.

(b.) Turn the Log N Period and Count Rate Meter Period recorders "OFF", and move the recorder pens to infinity.

Turn the Log N and Count Rate Meter recorders "OFF". Move the Count Rate Meter recorder pen to > 2 counts per second.

(c.) Turn the μμ Ammeter range switch to the 200 KW position.

(d.) Place the Fission Chamber drive switch in the "Manual" position.

(e.) Set the "Demand" potentiometer in the lower limit.

(f.) Turn the Servo switch on the "OFF" position and release.

(g.) Move the Log N recorder pen to the right through 0.01.

Observe that the Withdraw Permit light comes "ON". . . . _____

CHECK SHEET NO. BSR 203

PAGE 16

DATE 1/15/69

REVISION 1

Sam S. Hurt III
Reactor Supv. - Operations Div.

K W West
Reactor Controls Dept. I & C Div.

(h.) Turn the Log N Amplifier switch to the "GROUND" position.

Observe that the Withdraw Permit light goes "OFF". . . . . ._____

(i.) Turn the Log Count Rate Meter "Cal.-Use" switch to the "USE" position.

Observe that the Withdraw Permit light comes "ON". . . . . ._____

(j.) Move the Log Count Rate Meter recorder pen to the left to < 2 counts per second.

Observe that the Withdraw Permit light goes "OFF". . . . . ._____

Return the Log Count Rate Meter recorder pen to > 2 counts per second.

Observe that the Withdraw Permit light comes "ON". . . . . ._____

(k.) Place the Fission Chamber drive switch in the "AUTOMATIC" position.

Move the Log Count Rate Meter recorder pen to the right to > 8000 counts per second.

Observe that the Fission Chamber begins to withdraw and the Withdraw Permit light is "OFF". . . . . ._____

(l.) Move the Log Count Rate Meter recorder pen to the left to < 100 counts per second.

Observe that the Fission Chamber stops withdrawing and the Withdraw Permit light comes "ON". . . . . ._____

(m.) Move the Log Count Rate Meter recorder pen to the left of < 2 counts per second.

Observe that the Fission Chamber starts inserting and the Withdraw Permit light goes "OFF". . . . . ._____

CHECK SHEET NO. BSR 203

PAGE 17

DATE 1/15/69

REVISION 1

Sam S. Hurt III
Reactor Supv. - Operations Div.

K W West
Reactor Controls Dept. I & C Div.

(n.) Move the Log Count Rate Meter recorder pen to the right to > 20 counts per second.

Observe that the Fission Chamber stops inserting and the Withdraw Permit light comes "ON". . . . . _____

Note: Confirm that the insertion of the Fission Chamber was not stopped by the lower limit switch.

(o.) Place the Fission Chamber drive switch in the "Manual" position.

(p.) Turn the Log N Amplifier selector switch to the "Operate" position.

(q.) Establish and observe the conditions in the following table:

μμ Ammeter Range	Log N Level	Withdraw Permit Light ON	Withdraw Permit Light OFF	Verification
20 W	0.0001	X		ON _____
20 W	0.0015		X	OFF _____
200 W	0.0015	X		ON _____
200 W	0.015		X	OFF _____
2 KW	0.015	X		ON _____
2 KW	0.15		X	OFF _____
20 KW	0.15	X		ON _____
20 KW	1.5		X	OFF _____
200 KW	1.5	X		ON _____
200 KW	15.0		X	OFF _____

CHECK SHEET NO. BSR 203

PAGE 18

DATE 1/15/69

REVISION 1

Sam S. Hurt III
Reactor Supv. - Operations Div.

K W West
Reactor Controls Dept. I & C Div.

(r.) Move the Log N Recorder pen to the left to < 0.5.

(s.) Turn the μμ Ammeter range switch to 2 Mw.

(t.) Move the Log N Recorder pen to > 1.5 (but < 10).

Observe that the "Run" light comes "ON". . . . . ._____

(u.) Move the Log N Recorder pen to < 0.5.

Observe that the "Run" light goes "OFF". . . . . ._____

(v.) Move the Log N Period Recorder pen to the right to a period of < 100 seconds (but > 25 seconds).

(w.) Move the Log N Recorder pen to the right to > 20.

Observe that the Withdraw Permit light goes "OFF". . . ._____

(x.) Move the Log N Recorder pen to < 20 (but > 10).

Observe that the Withdraw Permit light comes "ON". . . ._____

(y.) Move the Log N Recorder pen to infinity.

(z.) Move the Log N Recorder pen to the right to < 10 (but > 1.5).

Observe that the "Run" light comes "ON". . . . . ._____

9.1.2 Log N Period and Count Rate Period Recorders

Establish the same conditions for this test as found in Section 9.1.1 steps (a.) through (f.).

(a.) Move the Log N Recorder pen to > .01.

Observe that the Withdraw Permit light comes "ON". . . ._____

(b.) Move the Count Rate Period Recorder pen to the right to < 25 seconds.

Observe that the Withdraw Permit light goes "OFF". . . ._____

CHECK SHEET NO. BSR 203

PAGE 19

DATE 1/15/69

REVISION 1

Sam S. Hurst III
Reactor Supv. - Operations Div.

K W West
Reactor Controls Dept. I & C Div.

(c.) Move the Count Rate Period Recorder pen to the right to < 7 seconds.

Observe that the "Reverse" relay K-18 energizes. . . . ._____

(d.) Move the Count Rate Period Recorder pen to infinity.

(e.) Move the Log N Period Recorder pen to the right to < 25 seconds.

Observe that the Withdraw Permit light is "OFF". . . . ._____

(f.) Move the Log N Period Recorder pen to the right to < 7 seconds.

Observe that the "Reverse" relay K-18 energizes. . . . ._____

(g.) Move the Log N Period Recorder pen to the left to > 7 seconds (but < 100 seconds).

Observe that the "Reverse" condition clears. . . . . ._____

(h.) Move the Log N Recorder pen to > 1.5 (but < 10).

(i.) Turn the μμ Ammeter range switch to the 2 MW position.

(j.) Move the Log N Period Recorder pen to > 100 seconds.

Observe that the "Run" light comes "ON". . . . . ._____

(k.) Turn the μμ Ammeter range switch to the 20 KW position.

Observe that the "Run" light goes "OFF", and the "Reverse" relay K-18 energizes after ~ 1 second delay. . . . . ._____

(l.) Move the Log N Period Recorder pen to < -100 seconds.

Observe that the "Reverse" relay K-18 de-energizes. . . ._____

9.1.3 Safety Level Recorders

Establish the same conditions for this test as found in Section 9.1.1 steps (a.) through (f.).

CHECK SHEET NO. BSR 203

PAGE 20

DATE 1/15/69

REVISION 1

Sam S. Hurt III
Reactor Supv. - Operations Div.

K W West
Reactor Controls Dept. I & C Div.

In addition to these:

(1.) Raise the Demand to 50%.

(2.) Position the cooling flapper in the "OPEN" position.

(a.) Turn the No. 1 Safety Recorder "OFF".

(b.) Move the No. 1 Safety Recorder pen to 55.

Observe that the Demand starts to decrease. . . . . ._____

(c.) Move the No. 1 Safety Recorder pen to 60.

Observe that the "Reverse" relay K-18 energizes. . . . ._____

(d.) Move the No. 1 Safety Recorder pen to zero.

(e.) Repeat steps (a.) through (d.) for No. 2 & 3 Safety Recorders.

No. 2 Safety Recorder . . . .step (b.) . _____ step (c.) ._____

No. 3 Safety Recorder . . . .step (b.) . _____ step (c.) ._____

(f.) Position the cooling flapper in the "Closed" position.

(g.) Move the No. 1 Safety Recorder pen to 110.

Observe that the Demand starts to decrease. . . . . ._____

(h.) Move the No. 1 Safety Recorder pen to 120.

Observe that the "Reverse" relay K-18 energizes. . . . ._____

(i.) Move the No. 1 Safety Recorder pen to zero.

(j.) Repeat steps (g.) through (j.) for the No. 2 & 3 Safety Recorders.

No. 2 Safety Recorder . . . .step (g.) . _____ step (h.) ._____

No. 3 Safety Recorder . . . .step (g.) . _____ step (h.) ._____

(k.) Set the Demand at minimum.

(l.) Turn the μμ Ammeter range switch to 20 W.

CHECK SHEET NO. BSR 203

PAGE 21

DATE 1/15/69

REVISION 1

Sam S. Hurt III
Reactor Supv. - Operations Div.

K W West
Reactor Controls Dept. I & C Div.

(m.) Replace all recorder slide wire covers.

(n.) Place all recorder amplifier switches in the "ON" position.

(o.) Position the cooling flapper in the "OPEN" position.

9.1.4 Regulating Rod Span Recorder

Establish the following conditions:

(1.) No Reverse

(2.) No Setback

(3.) All Trouble Monitor Lights "ON"

(4.) Slow Scram Clear

(5.) Count Rate Meter switch in the "USE" position.

CAUTION: This test must be made under the supervision of a Reactor Supervisor, Foreman, or Operator.

(a.) Withdraw the Regulating-Shim Rod to 2 inches.

Upper Limit light should be "ON". . . . . ._____

(b.) Stop Regulating-Shim Rod withdrawal.

Observe that span continues to withdraw until the Reg. Rod Span Recorder reads < 60 %. . . . . ._____

(c.) Manually insert the Regulating-Shim Rod, until the Reg. Rod Span Recorder reaches its lower limit as indicated by PL8 lower limit light.

(d.) Stop the Regulating-Shim Rod insertion.

Observe that span continues to insert, until the Reg. Rod Span Recorder reads > 60%. . . . . ._____

CHECK SHEET NO. BSR 203

PAGE 22

DATE 1/15/69

REVISION 1

Sam S. Hart III
Reactor Supv. - Operations Div.

K W West
Reactor Controls Dept. I & C Div.

(e.) Insert the Regulating-Shim Rod to the seat position.

Observe that the Reg. Rod Span Recorder reads ~ 60%. . . _____

(f.) Lower the Regulating Shim Rod to the seat position.

CHECK SHEET NO. BSR 203

PAGE 23

DATE 7/1/68

REVISION 0

Sam S. Hart III
Reactor Supv. - Operations Div.

K W West
Reactor Controls Dept. I & C Div.

10.1 TROUBLE MONITOR CHECK

(a.) Log N Amplifier selector switch turned to "GROUND" position.

"Safety Trouble" Annunciator __ _ Alarm _____ Clear _____

Period Channel "NORMAL" Light on Trouble Monitor __ ON _____

__ OFF _____

(c.) & (d.) No. 1 Level Safety Composite Amplifier

"Safety Trouble" Annunciator__ _ Alarm _____ Clear _____

Period Channel "NORMAL" Light on Trouble Monitor __ ON _____

__ OFF _____

No. 2 Level Safety Composite Amplifier

"Safety Trouble" Annunciator __ _ Alarm _____ Clear _____

Period Channel "NORMAL" Light on Trouble Monitor __ ON _____

__ OFF _____

No. 3 Level Safety Composite Amplifier

"Safety Trouble" Annunciator __ _ Alarm _____ Clear_____

Period Channel "NORMAL" Light on Trouble Monitor __ ON _____

__ OFF _____

(e.) No.__Level Safety Composite Amplifier*

Safety "NORMAL" Light on Trouble Monitor __ __ __ ON _____

__ __ __ OFF _____

No.__Level Safety Composite Amplifier*

Safety "NORMAL" Light on Trouble Monitor __ __ __ ON _____

__ __ __ OFF _____

*Record the number of the Composite Amplifier in the blank.

CHECK SHEET NO. BSR 203

PAGE 24

DATE 7/1/68

REVISION 0

Sam S. Hurt III
Reactor Supv. - Operations Div.

K W West
Reactor Controls Dept. I & C Div.

"Safety Trouble" Annunciator __ _ Alarm _____ Clear _____

"Two Safety Trouble" Annunciator_ Alarm _____ Clear _____

"Reverse" Annunciator __ _ __ _ Alarm _____ Clear _____

(g.) Sigma Bus connectors connected to all Level Safety Composite Amplifiers.

"NORMAL" Lights on Trouble Monitor __ __ __ __ ON _____

Annunciators __ __ __ __ __ __ __ __ __ __Clear _____

COMMENTS:

CHECK SHEET NO. BSR 203

PAGE 25

DATE 7/1/68

REVISION 0

Sam S. Hurt III
Reactor Supv. - Operations Div.

K W West
Reactor Controls Dept. I & C Div.

11.1 MANUAL SCRAMS

MANUAL SCRAM	MAKE UP LIGHT ON	DROPOUT LIGHT ON	SLOW SCRAM ANNUN. ALARMS
No. 1 Station			
No. 2 Station			
No. 3 Station			
No. 4 Station			
No. 5 Station			
No. 6 Station			
No. 7 Station			
No. 8 Station			
No. 9 Station			
Raise-Test Switch			
Control Power Key Switch			

COMMENTS:

CHECK SHEET NO. BSR 203

PAGE 26

DATE 7/1/68

REVISION 0

Sam S. Hurt III
Reactor Supv. - Operations Div.

K W West
Reactor Controls Dept. I & C Div.

12.1 ANNUNCIATORS

ANNUNCIATOR & TITLE	ALARMED	CLEARED
C1 - Log N Reverse		
C2 - Two Safety Trouble		
C3 - Safety Trouble		
C4 - 20% N_F Not in Run		
C8 - Shim Request		
C11 - Recorder Power Off		
D1 - Flapper Mid Position		
D2 - Low Δ P		
D3 - Radiation & Contamination		
D4 - Monitron Hi Level		
D5 - Log N τ < 7 seconds		
D6 - Setback		
D7 - Slow Scram		
D8 - Pool Level Low		
D9 - Low Flow		
D10 - Jet Off		
D12 - CR τ < 7 seconds		
D13 - Reverse		
D14 - Fast Scram		
G1 - Sec.Coolant P^H Hi		
G2 - Tower Basin Lo Temp.		

CHECK SHEET NO. ESR 203

PAGE 27

DATE 7/1/68

REVISION 0

Sam S. Hunt III
Reactor Supv. - Operations Div.

K W West
Reactor Controls Dept. I & C Div.

ANNUNCIATOR & TITLE	ALARMED	CLEARED
G3 - Tower Basin Hi Temp.		
G5 - Decay Tank Hi/Lo Level		
G6 - Decay Tank Hi Radiation		
G7 - PCA Control Room Temp. Hi		
G8 - Resistivity Lo		
G10 - Sec. Coolant Lo Flow		
G11 - Pri. Inlet Hi Temp.		
G12 - Pool Outlet Hi Radiation		
G13 - Reactor Core Hi Δ T		

COMMENTS:

CHECK SHEET NO. BSR 203

PAGE 28

DATE 7/1/68

REVISION 0

Sam S. Hurt III
Reactor Supv. - Operations Div.

K W West
Reactor Controls Dept. I & C Div.

13.1 LEVEL SAFETY CHAMBER H.V. SUPPLY TEST

		Current Meter Reading on Test Box
(c.) & (d.)	No. 1 Composite Amplifier	_____
	No. 2 Composite Amplifier	_____
	No. 3 Composite Amplifier	_____

CHECK SHEET NO. BSR 203

PAGE 29

DATE 7/1/68

REVISION 0

Sam S. Hurt III
Reactor Supv. - Operations Div.

K W West
Reactor Controls Dept. I & C Div.

14.1 RESTORATION OF SYSTEM

	Initial	
All test equipment removed from system	_____ I & C	_____ Operations
All operating cables connected to system	_____ I & C	_____ Operations

CHECK SHEET NO. BSR 203 PAGE 30

Proc. Ref. 15.1 DATE 11/21/68

REVISION 0

Sam S. Hurt III
Reactor Supv. - Operations Div.

K W West
Reactor Controls Dept. I & C Div.

IONIZATION CHAMBER SATURATION CHARACTERISTCS

Chamber Type _____ S. N. _____ Core Position _____

Reactor Heat Power _____ Accumulated Heat Power to Date _____

Applied B+ (V)	Uncompensated Current (A)	Compensated Current (A)	Remarks
20			
40			
60			
80			
100			
150			
200			
250			
300			
350			
400			
500			
600			
700*			
800*			

*Do not apply these voltages unless necessary to obtain plateau.

Date _____ Time _____ By _____ _____

CHECK SHEET NO. BSR 203

PAGE 31A

DATE 11/21/68

REVISION 0

Section 15.1

Sam S. Hurt III
Reactor Supv. - Operations Div.

K W West
Reactor Controls Dept. I & C Div.

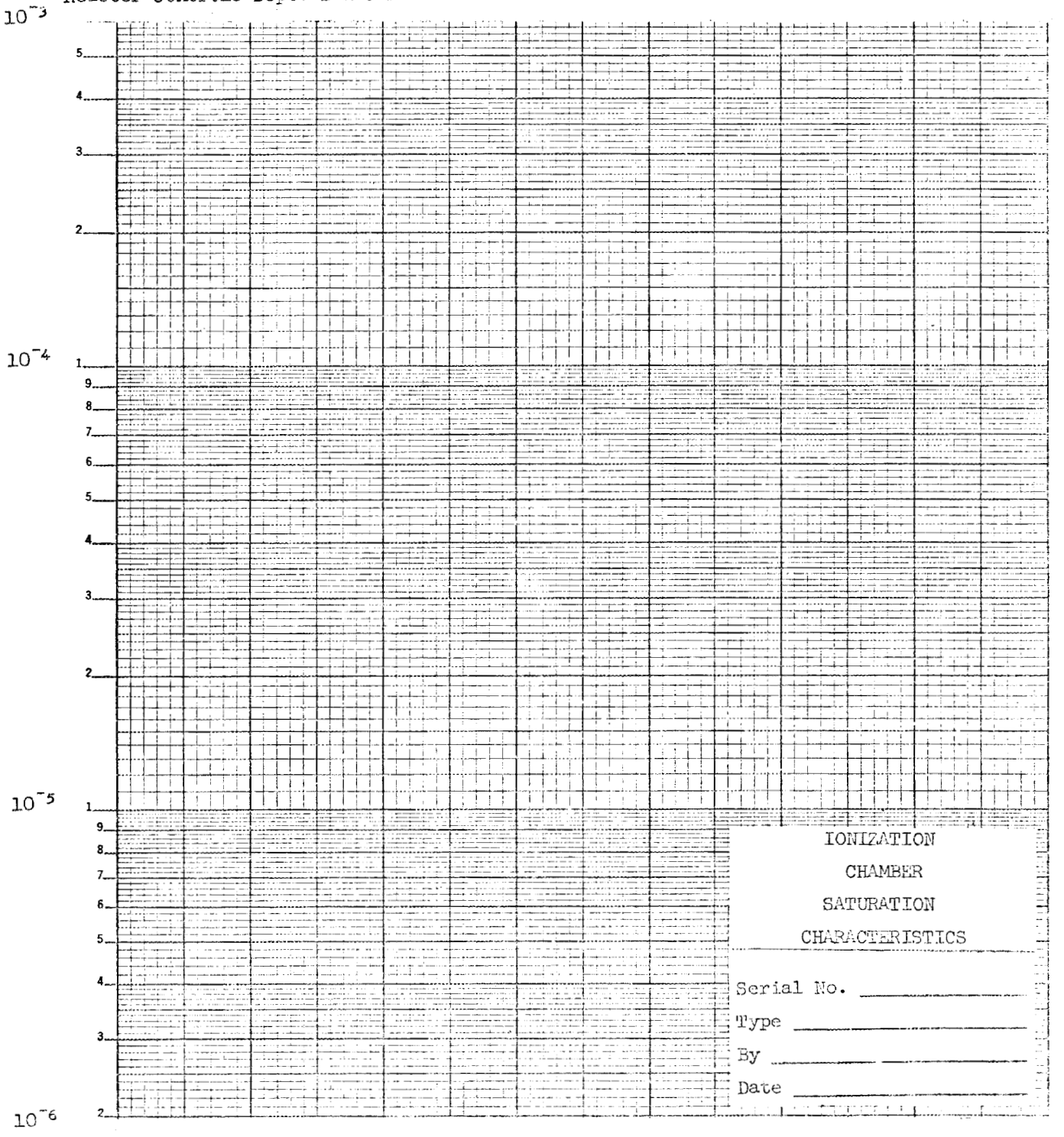

CHECK SHEET NO. BSR 203

Section 15.1

PAGE 31B

DATE 11/21/68

REVISION 0

Sam S. Hurt III
Reactor Supv. - Operations Div.

K W West
Reactor Controls Dept. I & C Div.

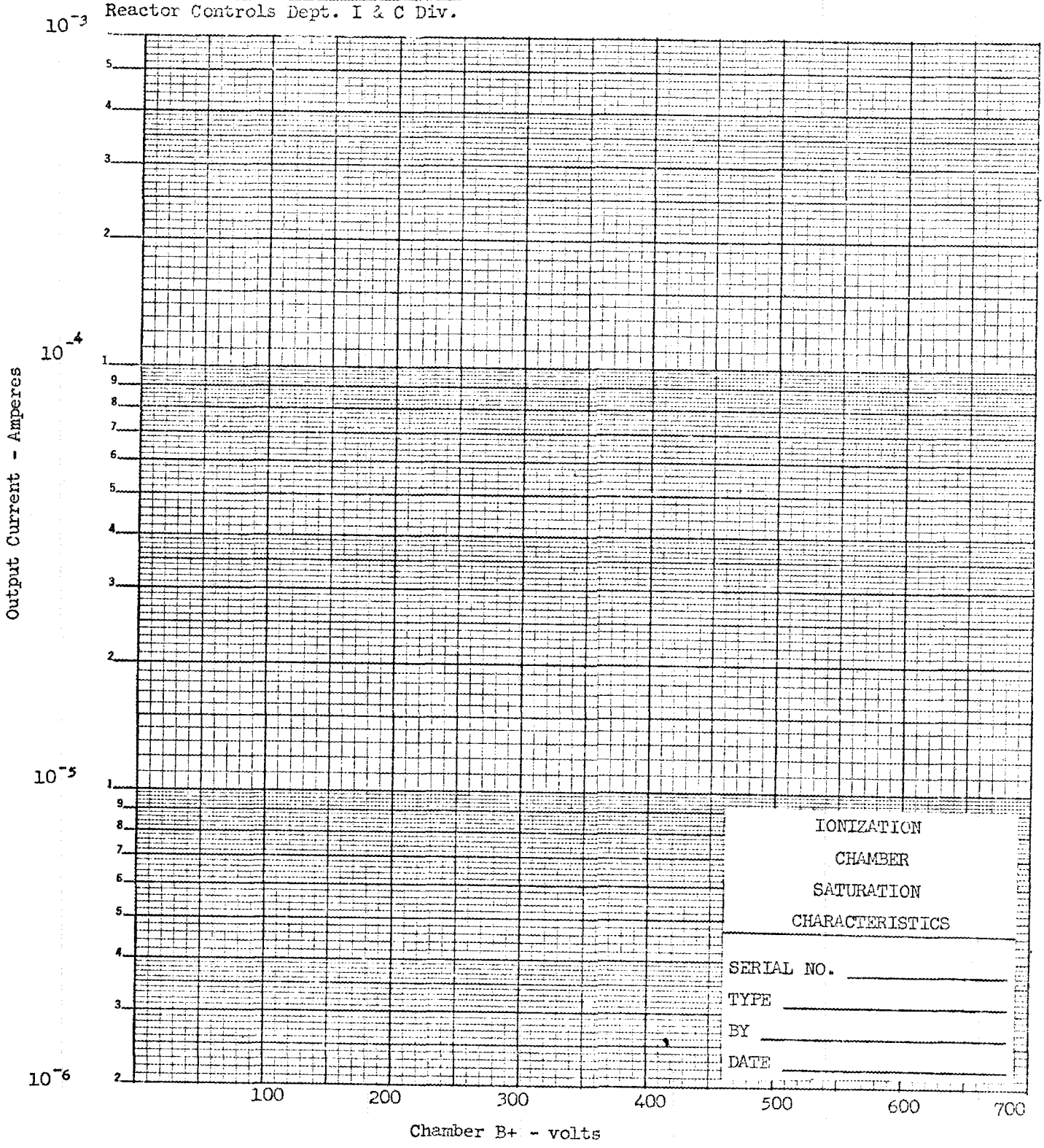

CHECK SHEET NO. BSR 203

Section 15.1

PAGE 31C

DATE 11/21/68

REVISION 0

Sam S. Hurt III
Reactor Supv. - Operations Div.

K W West
Reactor Controls Dept. I & C Div.

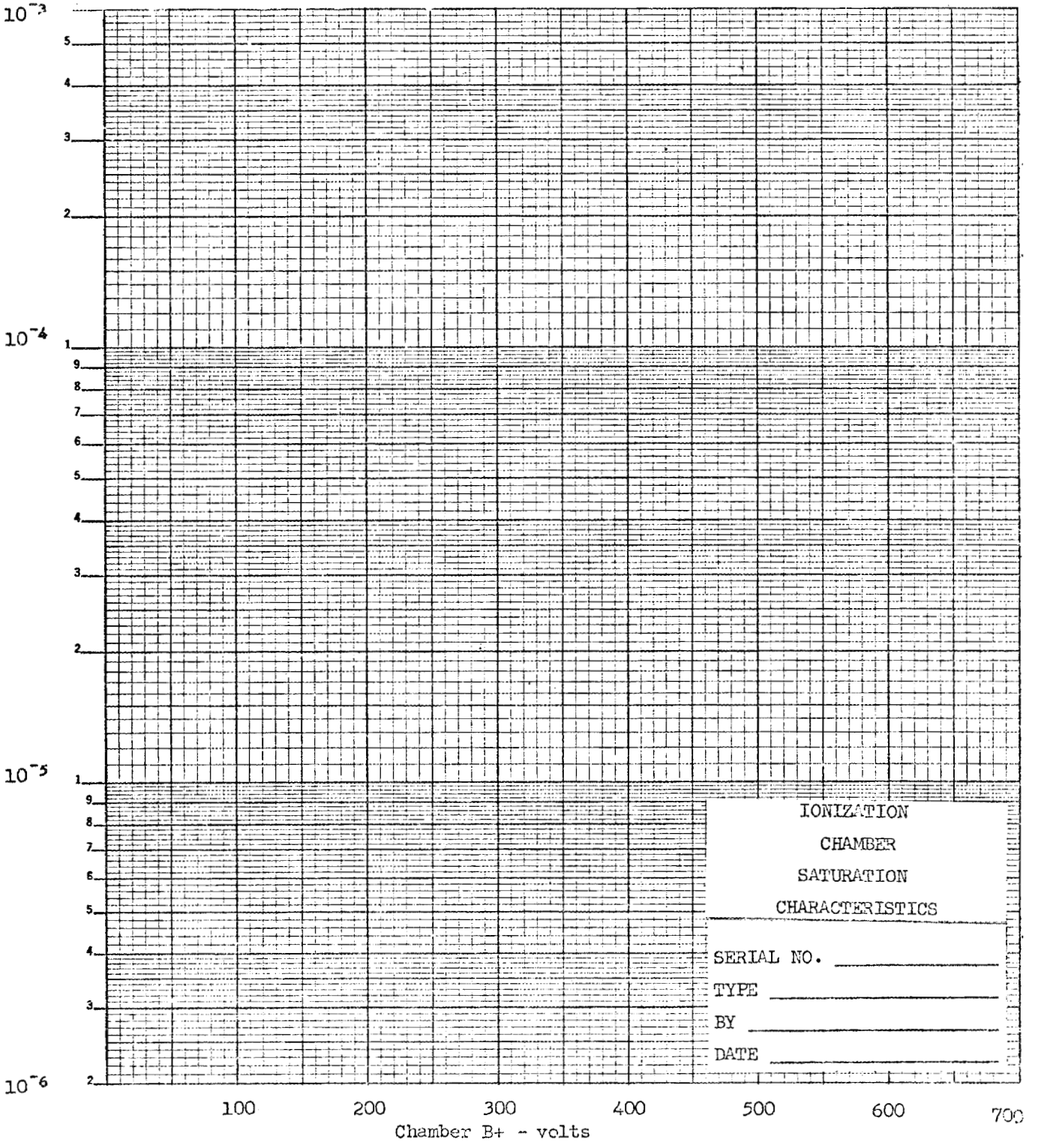

3.2. Process Instrumentation

3.2a. Introduction

The process instrumentation monitors the status of the reactor primary water system, secondary water system, building ventilation system, and off-gas system. Some of the output signals from this instrumentation function in the reactor control system; these signals are associated with the reactor primary water system (low flow rate, low differential pressure across the core, high differential temperature across the core, low water level in the pool, and flapper valve in improper position.) The remaining output signals operate annunciators, recorders, or indicators.

3.2b. Primary-Water-System Instrumentation

1. Flow-Rate Instrumentation. - The rate of flow of the primary water to the decay tank is monitored just upstream of the decay tank by FE-10, which is a 1/8-in.-thick orifice plate with a 6.1086-in.-diam bore. The primary flow transmitter, FT-10, transmits an electrical signal to an ECI* recorder, FR-10, and associated instrumentation in the reactor control room. When the reactor is operating in Mode 2 (i.e., with the flapper valve closed), the associated instrumentation will initiate an alarm if the flow rate decreases to 850 gpm and will initiate a reactor scram if the flow rate decreases to 750 gpm. In addition, a pneumatic flow transmitter, FT-10A transmits flow information to an indicating gauge, FI-10A, at the pump house.

---

*Foxboro Electronic Control Instrumentation

2. Differential-Pressure Instrumentation. - The differential pressure across the core is monitored by a system which detects the differences between the static head in the pool at the elevation of the plenum and the static head in the plenum itself. (The difference which represents the dynamic head loss across the core is transmitted from PdT-22 to an ECI recorder, PdR-22, and associated instrumentation in the control room.) When the reactor is operating in Mode 2 (i.e., with the flapper valve closed), the associated instrumentation will initiate an alarm if the core ΔP is 5 in. H_2O or less and will initiate a scram if the core ΔP is 3.8 in. H_2O or less.

3. Flapper-Valve-Position Switches. - The position of the flapper valve is monitored by switches which are installed at the top of the flapper-valve actuator arm. If the valve is fully open, this condition is sensed by LS-17 and LS-18 and is transmitted to the control room. If the valve is fully closed, this condition is sensed by LS-19 and LS-20 and is transmitted to the control room. (In addition to the other functions of these switches, they will initiate a slow scram if the flapper valve is not fully open or fully closed.)

4. Differential-Temperature Instrumentation. - The differential temperature across the core during Mode-2 operation (flapper closed and forced cooling flow) is monitored by a matched set of resistance-bulb thermometers: one, TdE-17A, in the exit water line and one, TdE-17B, in an insulated line which extends from a manifold located just above the top of the core to the

exit water line. (The manifold and the insulated line are sized so that the transit time of the water is essentially the same as that for the water going to the exit temperature-sensor bulb via the core.) The output of the thermometers is transmitted to TdM-17 which generates the differential temperature signal; this signal is in turn transmitted to an ECI recorder, TdR-17, and associated instrumentation in the control room. This instrumentation will initiate an alarm and a setback if the differential temperature increases to 17°F. (This setback is not bypassed electrically in Mode 1; however, the sensors are bypassed by the route of the cooling flow.)

5. Pool-Outlet Radiation Instrumentation. - An ionization chamber, ORNL Q-2045 Type, is mounted in the valve pit adjacent to the pool-outlet cooling-water line to monitor the radiation level. This chamber is connected to a logarithmic electrometer, RIM-5, in the control room; the output signal of this electrometer is displayed on a meter with an adjustable alarm-point mechanism. At 2000 kw the electrometer output is equivalent to 10 r/hr and the alarm point is set equivalent to 100 r/hr. The output of the electrometer is also displayed on the miscellaneous radiation recorder, RR-5.

6. Decay-Tank-Level Instrumentation. - The water level in the decay tank is monitored by a bubble-type level sensor and the output signal is transmitted to an indicating gauge, LI-4A, and to pressure switches in the control room. An alarm will be initiated (by LS-4A) if the water level increases to 160 in. H_2O or

(by LS-4B) if the water level decreases to 80 in. H_2O. (With the primary flow system shut down, the normal water-level indication will be >300 in. H_2O.)

7. Reactor Inlet-Temperature Instrumentation. - The reactor inlet-temperature sensor, TE-16-1, a 1/16-in.-diam, stainless steel sheathed Chromel-Alumel thermocouple is supported in a 1/4-in.-OD aluminum tube which extends from the pool surface to just above the top of the core. The lower end of the support tube is inclined at a 45° angle with respect to the horizontal; also, in the lower end four rows of 1/8-in.-diam holes were drilled to allow the water to contact the sheath of the thermocouple. This sensor transmits temperature information to the miscellaneous temperature recorder (TR-16) as point TR-16-1.

8. Reactor Outlet-Temperature Instrumentation. - The reactor outlet-temperature sensor, TE-16-2, a 1/16-in.-diam, stainless steel sheathed Chromel-Alumel thermocouple, is supported in a 1/4-in.-OD aluminum tube which extends from the pool surface into the south portion of the reactor outlet plenum. The lower end of the thermocouple which extends 3 in. into the plenum is protected by the lower end of the support tube which is penetrated by four rows of 1/8-in. holes. This sensor transmits temperature information to the miscellaneous temperature recorder (TR-16) as point TR-16-2.

9. Pool Inlet-Temperature Instrumentation. - The pool-inlet temperature is monitored at the exit of the heat exchanger by a Chromel-Alumel thermocouple, TE-13. This thermocouple is connected to an ECI recorder, TR-13, and to an ECI controller,

TC-13, (via a temperature transmitter, TT-13) and to associated instrumentation. The associated instrumentation initiates an alarm if the pool inlet temperature increases to 105°F. The recorder-controller, by repositioning the secondary-cooling-flow throttle valve, TCV-13, maintains the pool-inlet temperature at the desired temperatures. (See Section 3.2c. for details of this control system.)

10. Heat-Exchanger Inlet Temperature and Heat-Exchanger Outlet Temperature Instrumentation. - The heat-exchanger primary-inlet and the heat-exchanger primary-outlet temperatures are monitored by Chromel-Alumel thermocouples TE-16-5 and TE-16-6, respectively. These sensors transmit temperature information to the miscellaneous temperature recorder (TR-16) as points TR-16-5 and TR-16-6, respectively.

11. Miscellaneous Temperature Instrumentation. - Three points on the miscellaneous temperature recorder (TR-16) are used to indicate the temperature of miscellaneous items as shown in Table 3.2.1.

Table 3.2.1. Temperature Instrumentation for Miscellaneous Items

Item	Thermocouple	Recorder Point
Normal off-gas line	TE 16-4A	TR 16-4
Normal off-gas surge tank	TE 16-3A	TR 16-3
Degasser tank	TE 16-10A	TR 16-10

12. Pool-Water-Temperature Instrumentation. - Six thermocouples are installed on the south side of the dam jam on the east side of the reactor pool as shown in Table 3.2.2.

Table 3.2.2. Pool Water Temperature Instrumentation

Elevation Above Pool Floor (ft)	Thermocouple	Recorder Point
1	TE 16-4	None
4	TE 16-3	None
7	TE 16-12	TR 16-12
10	TE 16-11	TR 16-11
13	TE 16-10	None
16	TE 16-9	TR 16-9

13. Primary-Cooling-Pump-Inhibit Circuit. - Valve HCV-54, which is located at the discharge of the primary side of the heat exchanger, is used as a throttle valve when establishing primary water flow. A switch HS-54, which is installed on the housing of this valve, functions in the primary-cooling-pump start circuit; the pump cannot be started unless HCV-54 is fully closed.

3.2c. Secondary-Water-System Instrumentation

1. Flow-Rate Instrumentation. - The rate of flow of the secondary water to the cooling tower is monitored just downstream from the heat exchanger by FE-11 which is a 1/8-in.-thick orifice plate with a 6.3343-in.-diam bore. The secondary flow transmitter, FT-11, transmits a pneumatic signal to flow-indicator

FI-11 at the pump house and to FR-11, TR-15 (a two-pin, Foxboro Pneumatic Control recorder) located in the control room. An associated pressure switch, FS-11A, will sound an annunciator if the flow decreases to <300 gpm. The flow rate is controlled by the position of the throttle valve, TCV-13; the position of this valve is adjusted by the pool-inlet-temperature controller, TC-13.

In addition, the secondary flow rate is the parameter which is used to control operation of the cooling tower fans. The sequence of operation of this system is indicated in Table 3.2.3.

Table 3.2.3. Fan Speed Control

Switch*	Change of Flow Rate	Fan Speed
FS-11F	Increase to 1200 gpm	South in low
FS-11D	Increase to 1250 gpm	North in low
FS-11E	Increase to 1390 gpm	South in high
FS-11C	Increase to 1410 gpm	North in high
FS-11C	Decrease to 1250 gpm	North in low
FS-11E	Decrease to 1200 gpm	South in low
FS-11D	Decrease to 1040 gpm	North off
FS-11F	Decrease to 1000 gpm	South off

*These are differential-type pressure switches with an adjustable low-pressure setpoint and with an adjustable span which is used to determine the high-pressure setpoint.

If only one fan is selected for use or if only one fan is available for use, the above switch setpoints and fan action will apply for that fan. (The fan selector switch at the pump house has three positions: BOTH, SOUTH, or NORTH.)

2. Tower Basin Temperature. - The temperature of the basin water is monitored by a gas-filled resistance bulb thermometer, TE-15. This 1/2-in.-OD and 16-ft-long unit is housed in a 16-ft-long 1-in. (schedule 40) stainless steel pipe which is penetrated by four rows of 1/4-in.-diam holes. The pipe extends from the top of the southeast corner of the basin sump to the bottom of the northeast corner of the sump. The temperature transmitter, TT-15, which is adjacent to the top of the pipe, transmits a pneumatic signal to temperature indicator TI-15 located in the pump house and to FR-11, TR-15 (a two-pen recorder) located in the control room. Two associated pressure switches, TS-15A and TS-15B, sound annunciators if the temperature increases to 89°F or if the temperature decreases to 60°F, respectively.

3. PH Instrumentation. - The pH probe (AphE-14) is located at the cooling tower. Water is supplied to the probe from the discharge of the air-conditioning pump; after passing over the probe, the water is returned to the basin sump. The probe transmits an electrical signal to the pH amplifier-indicator (AphT) which in turn transmits an electrical signal to the recorder-controller (Aph R-14, Aph C-14) in the control room. The controller transmits a variable current signal to the motor

controller, Aph CO-14, located at the pump house. The motor controller transmits a proportional voltage signal to the motor of the Minipump, which feeds acid to the cooling tower basin. An adjustable alarm contact on the recorder (Aph R-14) will sound an annunciator if the pH increases to 8.2.

4. Tower-Fan-Speed Indicators. - Indicator lights in the control room display the speed of either or both cooling tower fans as follows: SI-15A is illuminated if the north fan is in high-speed operation; SI-15B is illuminated if the south fan is in high-speed operation; SI-15C is illuminated if the north fan is in low-speed operation; and SI-15D is illuminated if the south fan is in low-speed operation.

5. Heat-Exchanger Inlet Temperature and Heat-Exchange Outlet Temperature Instrumentation. - The heat-exchanger secondary-inlet and the heat-exchanger secondary-outlet temperatures are monitored by Chromel-Alumel thermocouples TE-16-7 and TE-16-8, respectively. These sensors transmit temperature information to the miscellaneous temperature recorder (TR-16) as points TR-16-7 and TR-16-8, respectively.

3.2d. Building-Ventilation System

The instrumentation indicating the status of the building ventilation system consists of a pitot tube installed in the exit duct (north of Building 3010) and a radiation monitor located in the exit duct. The only automatic control action associated with this instrumentation is that the building is placed in the containment mode if the duct monitor senses a radiation level of 50 mr/hr. (Refer to Sections 7.2d and 10.1

for details of the building ventilation system; this system is more commonly referred to as the cell-ventilation system.)

3.2e. Normal Off-Gas System

The instrumentation indicating the status of the normal off-gas system at the BSR consists of a differential pressure transmitter (956, connected to the off-gas surge tank) which transmits a pneumatic signal to a vacuum gauge mounted in the vertical control room panel. (See Section 7.2c for details of the normal off-gas system.)

3.2f. Process Instrumentation Checkout Procedures

The performance checks made on the process instrumentation are included in the procedures given in Section 3.1e.

3.3. The Local Console

Figure 3.3.1. illustrates the local BSR control room. All the controls and indicating instruments are labeled to facilitate complete comprehension of the operating procedures.

3.3a. Left-Hand Side of Console

The left-hand side of the console has the following switches and readouts (excluding the recorders and annunciators):

1. The selsyns (position indicators) for control rods 1, 2, 3, and 4. NOTE: Above each selsyn the following information is displayed by lighted indicators:
   a. "LL" when the rod drive is at its lower limit of travel.
   b. "S" when the rod is fully inserted in the core, i.e., at seat.
   c. "C" when the magnet and armature are engaged, i.e., clutched.
   d. "UL" when the rod drive is at its upper limit of travel.
2. Below each selsyn a toggle-type electrical switch is located. When in the UP position, individual rod withdrawal is requested. When in the DOWN position, individual rod insertion is requested.
3. Below the insert and withdraw switch for the No. 1 control rod, the red "building-evacuation" button and the green "horn-silence" button are located. (The functions of these switches are described in Section 3.5.)
4. Below the building-evacuation button, the annunciator "acknowledge reset" switch, a toggle-type electrical switch, is located. (See Section 2.4b for a description of the functions of this switch.)

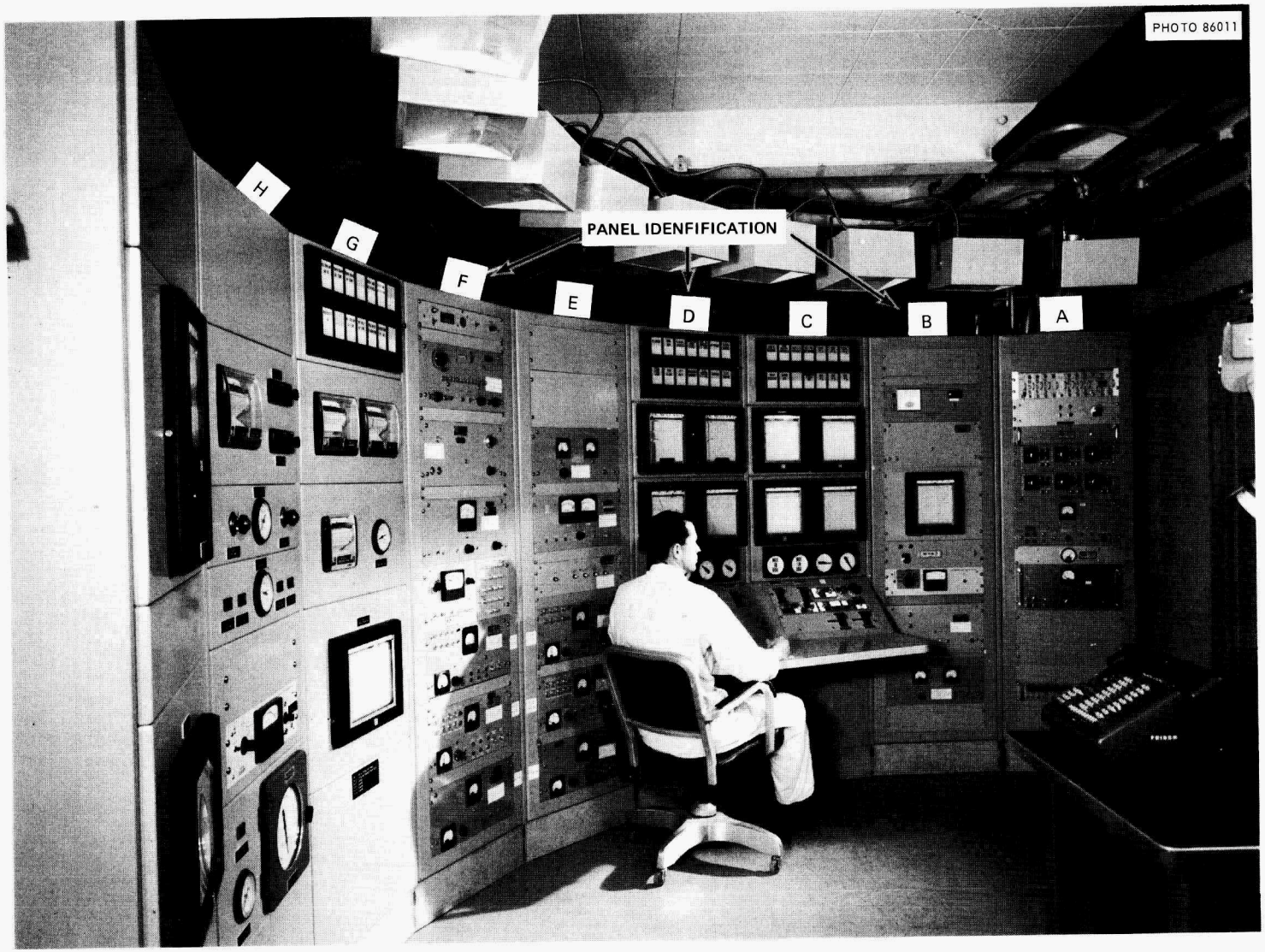

Fig. 3.3.1. BSR Local Control

5. Under the metal door, seven toggle-type electrical switches are located. The switch on the right is the master raise-clutch switch. The six switches on the left are the individual rod-drive raise-clutch switches. (The function of these switches is described in Section 3.1d.) Normally, the six rod-drive switches are in the center position and the master raise-clutch switch is in the run position.

3.3b. Right-Hand Side of Console

The right-hand side of the console has the following switches and readouts (excluding the recorders and annunciators):

1. Selsyn indicators: "LL", "S", "C", and "UL" indicators; and insert and withdraw switches for control rods 5 and 6.
2. A selsyn indicator showing the position of the fission chamber (0 to 50 in. of travel) and "LL" and "UL" indicators. The manual controls for the fission-chamber-positioning mechanism is a toggle-type electrical switch located below the selsyn indicator. When the switch is in the UP position, fission-chamber withdrawal is requested; when the switch is in the DOWN position, fission-chamber insertion is requested.
3. A selsyn indicator showing the percentage (5 to 100%) of the demanded power range. If 5% is selected, the lower limit light (LL) above the indicator will come on; the upper limit (UL) will come on at about 110%. The controls for the demand (logarithmic potentiometer) is a toggle-type electrical switch located below the dial indicator. When the switch is in the UP position, raising of the demand is requested; when it is in the DOWN position, lowering of the demand is requested.

4. There are nine indicator-light and/or switch panels on the right-hand side of the console. They appear as shown below and their functions are as indicated.

   a. The switch in the center of the panel allows one to select rod 1, 2, or 3 as the preferred rod (see Figure 3.3.2).

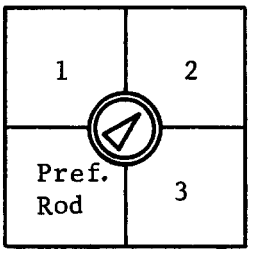

Figure 3.3.2

   b. The switch in the center of the panel allows one to select manual or automatic control of the fission-chamber drive (see Figure 3.3.3).

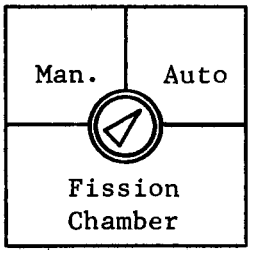

Figure 3.3.3

   c. If the top section brightens, the conditions required to withdraw rods are satisfied. If the lower left section brightens, the regulating rod is at its lower limit (1% of travel). If the lower right section brightens, the regulating rod is at its upper limit (99% of travel; see Figure 3.3.4).

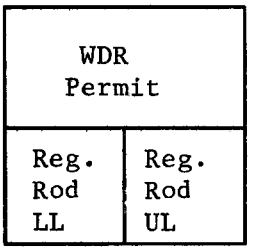

Figure 3.3.4

   d. The switch in the center of the panel is the group-actuate switch. When the switch is

held in the clockwise position, group withdraw of all rods is requested. When the switch is placed in the counterclockwise position, group insertion of all rods is requested. "Hold" is the neutral position (see Figure 3.3.5).

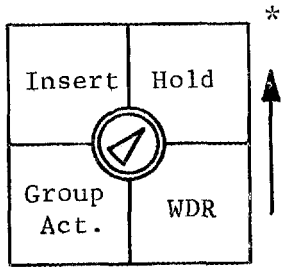

Figure 3.3.5

e. The switch in the center of the panel is the servo-selector switch. When the switch is turned clockwise, servo is obtained (assuming other conditions, listed in Section 3.1d are satisfied) and the "on" section will brighten. Unless the reactor is in instrument start when the switch is turned counterclockwise, servo is no longer requested and the "off" section brightens. "Hold" is the neutron position (see Figure 3.3.6).

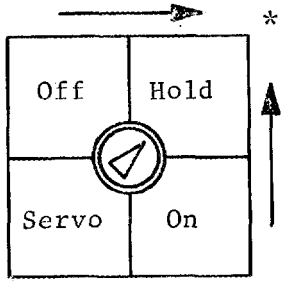

Figure 3.3.6

f. The switch in the center of the panel is the instrument-start selector switch. When the switch is turned clockwise, instrument start request is obtained (assuming other conditions, listed in Section 3.1d are satisfied). Once instrument start is obtained,

*The arrows indicate the direction of spring action.

the "on" section will brighten. when the switch is turned counterclockwise, instrument-start is no longer requested and the "off" section brightens. "Hold" is the neutral position (see Figure 3.3.7).

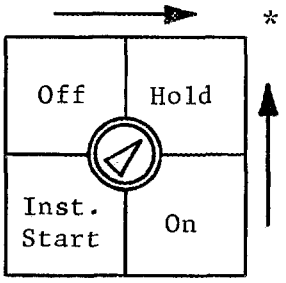

Figure 3.3.7

g. The top section of this panel brightens when "run" is obtained; the bottom section brightens when the conditions for "run" are not satisfied (see Figure 3.3.8).

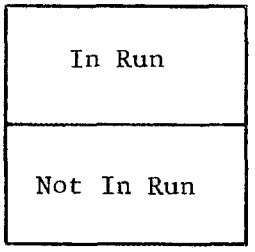

Figure 3.3.8

h. The top section of this panel brightens when the key switch is in the ON position. The lower left section of this panel brightens when the flapper-valve is fully closed (see Figure 3.3.9).

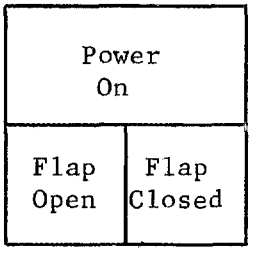

Figure 3.3.9

i. The upper left section of this panel brightens if the reactor is scrammed by the "make-up" scram circuit. The upper right section of this panel brightens if the reactor is scrammed by the "drop-out" scram circuit. The lower section is

*The arrow indicates the direction of spring action.

always brightened and simply identifies the switch in the center of the panel. This switch must be depressed to reset the slow scram circuits (see Figure 3.3.10).

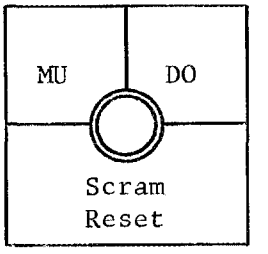

Figure 3.3.10

6. There are two other switches on the right-hand side of the console.

   a. Key Switch. - Only with the key switch in the ON position is electrical power supplied to the reactor start-up control circuits. In the OFF position, the electrical power to the start-up control circuits is off; the reactor is scrammed and remote operation cannot be selected.

   b. Scram Button. - Depressing the large, red-colored button on the console will initiate a slow scram.

7. On panel B the following switches are located:

   a. The "power-range" selector dial. - Seven positions are indicated (2 w,* 20 w, 200 w, 2 kw, 200 kw, and 2 Mw); see Figure 3.3.11.

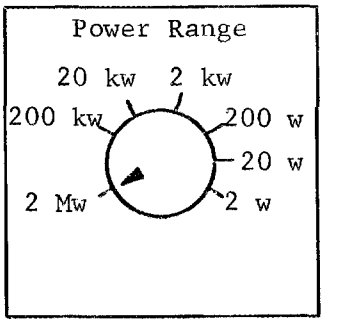

Figure 3.3.11

   b. Above the "power-range" selector dial, the local remote control switch is located. When this switch is turned clockwise, remote operation is

*Although this position is indicated, it is not available for use.

selected. When this switch is turned counterclockwise, local operation is selected. This switch is spring actuated to return to the neutral (or HOLD) position.

3.4. The Remote Console

The instrumentation allowing remote control of the BSR is located on the right-hand side of the ORR console (see Figure 3.4.1).

3.4a. Left-Hand Side of Panel

In the upper left-hand corner of the panel, three emergency-control buttons are located.

1. The red-colored button will actuate the gas-operated evacuation horn at the BSR.
2. The green-colored button will silence the horn as long as the button is being depressed.
3. The black-colored button will place the BSR in containment.

NOTE: These switches are effective at all times.*

3.4b. Upper Right-Hand Side of Panel

1. In the upper right-hand corner, two indicator-light panels are located. If the section labeled 1, 2, 3, 4, 5, or 6 brightens, the respective rod is seated in the core. If the "Pro" section brightens (on the bottom section of the right-hand annunciator), a process-system annunciator in panel G at the BSR is in the alarm condition and has not been acknowledged. If the "NUC" section brightens, a nuclear-system annunciator in panel C or D at the BSR is in the alarm condition and has not been acknowledged.

*Except for those switches indicated in this manner, all remote-console switches are only effective when remote operation is selected.

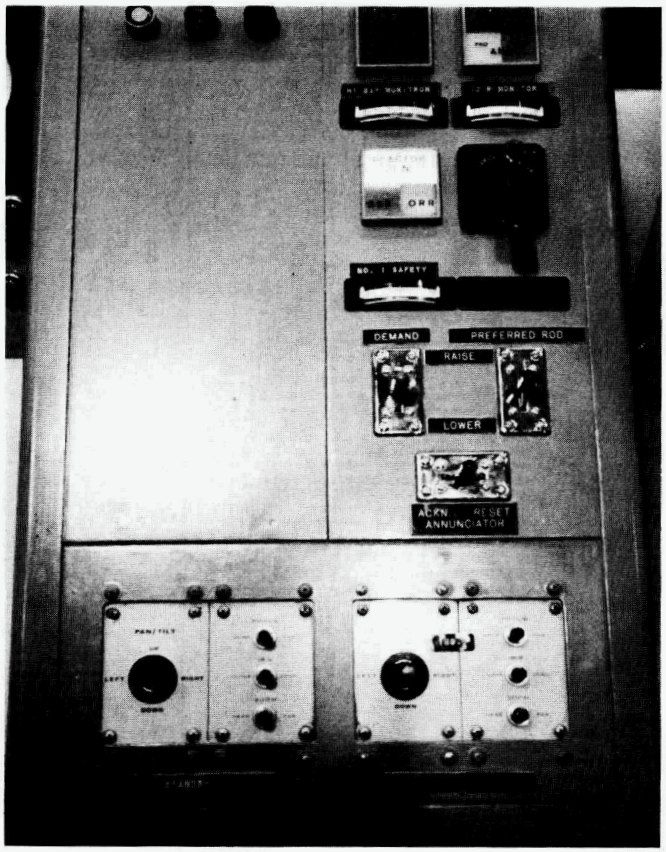

Fig. 3.4.1. BSR Remote Control Console

2. Two meters are located directly below the two annunciators listed above.
   a. The right-hand meter indicates the radiation level as determined by the "12 r/hour monitor" (located west of the BSR local control room); the meter scale reads 0-12.
   b. The left-hand meter indicates the radiation level as determined by the "high-bay monitor" (located west of and above the BSR local control room). The meter scale reads 0-25; multiply the meter reading by 5 to obtain the radiation dose rate in mr/hr.
3. Below these two meters, a third indicator-light panel and a scram switch are located.
   a. If the top section of the indicator-light panel, "reactor on", is brightened, no scram condition exists. If the "BSR" section is brightened, local control is selected; if the "ORR" section is brightened, remote control has been selected.
   b. Turning the scram switch in either direction off the center position will scram the reactor. NOTE: This switch is effective at all times.
4. Below the two instruments described above, two more meter positions are provided.
   a. The left-hand meter (0-to-200 scale) indicates the reactor power level as determined by the No. 1 safety recorder.
   b. The right-hand meter position is not in use.
5. Below these two meters, two toggle-type electrical switches are located.

a. The left-hand switch is the logarithmic potentiometer demand adjustment switch; its range is for 5% to 100% (the same as the range at the local control).

b. The right-hand switch allows manipulation of the preferred rod. In the UP position, rod withdrawal is requested; in the DOWN position, rod insertion is requested. (Preferred-rod withdrawal will not occur unless the reactor is under servo control and unless the regulating rod is above its midrange limit switch. Preferred-rod insertion is allowed until the seat switch or the lower limit switch for that rod is actuated even if the reactor is not in servo control.) This switch should be used to maintain the regulating-rod position between 10 to 90% of its range as indicated on the local regulating-rod recorder.

6. Below the two switches described above, the annunciator "acknowledge-reset" switch (a toggle-type electrical switch) is located. When the reactor is in remote operation, the functions of this switch are the same as that of the local BSR annunciator "acknowledge-reset" switch (see Section 2.4b for functions of this switch).

7. Below the instruments described above are the controls for the high-bay and control-room television cameras. The controls are labeled sufficiently well to allow one to manipulate this monitoring system.

a. When improved quality of the picture is desired, zoom the lens in fully; i.e., until the objects viewed are as large

as possible. (To zoom the lens in, move the zoom switch to the far position; to zoom the lens out, move the zoom switch to the near position.) Adjust the lens focus for the sharpest picture of the desired object. Focus for that object will then remain while the lens is zoomed in or out. If focusing on an object at a different distance is desired, zoom the lens in fully and adjust the lens focus again.

b. Operations Division personnel should not attempt to adjust any television-system controls except the following console controls: focus, iris, and zoom; and receiver controls H hold (horizontal hold), V hold (vertical hold), and brightness. Adjustment of all other controls should be made by Instrumentation and Controls Division personnel. Abnormal conditions which Operations Division personnel may attempt to correct and the procedures to be followed are as follows:

(1) If the picture "rolls" vertically, the "V hold" control should be adjusted.

(2) If the picture seems to move across the tube or if the picture becomes a series of slanted lines, the "H hold" control should be adjusted.

(3) If neither of the adjustments listed above restore the picture, make no further adjustments and notify Instrumentation and Controls Division personnel.

(4) If the picture tube goes blank, adjust the "brightness" control until the picture tube is illuminated. If no picture is present, make no further adjustments and notify Instrumentation and Controls Division personnel.

(NOTE: Once the picture disappears, it cannot be restored by the normal console controls; i.e., focus, iris, zoon, pan, and tilt. No attempt should be made to adjust these controls since this will probably result in ruining the motors operated by these controls.)

c. During periods when the reactor is shut down or is being operated locally, the iris should be kept sufficiently closed so that only a very faint, but legible, picture is displayed. (This will prolong the camera-tube life and will help prevent image burn.) At no time should the camera be left focused on any bright object for long periods of time. (This would result in the image being permanently impressed upon the face of the camera tube.)

d. During periods when the reactor is being operated remotely and when the vertical control panel is not being scanned, the camera should be zoomed out so that most of the nuclear-instrumentation recorders can be observed. (Of these recorders, the regulating-rod recorder is the least significant to watch constantly.) If, when the camera is zoomed in on an object, it is desired to view an object not immediately adjacent, zoom out until the second object is in view or until the maximum area is in view. Then move the camera to bring the second object to the center of the picture tube; finally, zoom in on the second object. NOTE: If, during remote operation, only one of the two channels is available and if that channel fails, the operator should immediately scram the reactor.

3.5. Radiation and Contamination Monitors

3.5a. The Facility Radiation and Contamination Alarm System (FRCAS)[1]

The facility radiation and contamination alarm system, installed in the reactor facility, continuously and automatically monitors gamma radiation (by three gamma Monitrons) and air contamination (by three beta-gamma monitors.)

These instruments and other components in the network provide health physics monitoring information, sound local alarms when abnormal conditions occur, and indicate abnormal conditions on a central panel board in the control room. These local alarms also sound the local "RS&C System" annunciator; this is used to bring the situation to the attention of the remote-desk operator.

Operating personnel are first given warning when a "caution level" is detected by a radiation Monitron or an air monitor. A second warning is given when a "high level" is detected.

The building evacuation and containment systems operate automatically when two or more radiation Monitrons detect a high level of radiation or when two or more air monitors detect a high level of air contamination.

Radiation, contamination, and instrument-failure signals from the local continuous air monitors and Monitrons are collected and processed at the radiation warning panel in the control room. It is intended that the reactor operator monitor the radiation warning panel and report

---

[1] J. A. Russel, Jr., and D. J. Knowles, Description of Facility Radiation and Contamination Alarm Systems Installed in the Bulk Shielding Facility, Building 3010, ORNL TM-1874, (August 22, 1967).

promptly to local representatives of the Applied Health Physics Department any abnormal condition that appears. The Health Physics personnel are responsible for determining the extent of any radiation or contamination hazard, according to their procedures, and for establishing suitable safeguards. They are also responsible for maintaining the system and for all operations on, and routine surveillance of, the local continuous air monitors and Monitrons.

In monitoring the radiation warning panel, the reactor operator is concerned with the following features:

1. Indicator Modules. - Alarm lamps, normally glowing dimly, become bright to signal their respective alarm conditions: white lamp for instrument failure; yellow lamp for intermediate level (7.5 mr/hr for the radiation Monitron and 1,000 counts/min for the air monitors); and red lamp for high level (23 mr/hr for the radiation Monitron and 4,000 counts/min for the air monitors). A reset button on each module dims the alarm lamps; they remain dimmed after release of the push button provided the alarm condition no longer exists.
2. Buzzer Modules. - Any alarm condition signaled by an indicator module is called to the operator's attention by an audible alarm. The audible alarm is acknowledged and silenced by the push button on the buzzer module. (The "RS & C" annunciator at the BSR control room will, simultaneously, alarm and must also be acknowledged and silenced.)
3. Evacuation-Alarm Modules. - One evacuation-alarm module is actuated by any two radiation-Monitron high-radiation signals and

the other by any two air-monitor high-radiation signals. A red lamp glows brightly on the module which is in the "alarm" condition.

4. Evacuation System

a. Horn. - The evacuation-alarm module in ALARM turns on the evacuation horn which continues to sound for 3 or 4 minutes until its compressed-gas reservoir is exhausted. After depletion, the reservoir must be replaced and the solenoid trip valves manually reset while the green "silence" button is being depressed to keep the nitrogen cylinder from becoming depleted.

b. Beacons. - The evacuation-alarm module in ALARM turns on the flashing beacons. They remain in operation until the alarm condition is cleared; i.e., until sufficient indicator modules have been reset so that neither of the two evacuation-alarm modules remains in the alarm condition.

c. Manual Control for Evacuation Alarm. - The three red evacuation alarm push buttons (located on the local console, on the remote console, and on a separate module of the radiation panel) actuate the evacuation horn and beacons; the beacons stop when the push button is released.

5. System Monitor and Test Features

a. Power Supply. - The "power supply" lamp (green) glows brightly when the power supply is normal.

b. Horn Trouble. - The red lamp for the horn normally blows dimly; the lamp glows brightly when the supply pressure to the horn is abnormal.

c. Local Instrument (i.e., Radiation Monitor or Air Monitor) Removal. - All three lamps on the associated indicator module glow brightly when the local instrument is disconnected. If the instrument is a part of the evacuation system, its removal is equivalent to a high-radiation alarm.

d. Normal-Disable Test Switch. - When in the DISABLE position, this key-operated switch prevents the evacuation horns and beacons from operating when an evacuation-alarm module is in the ALARM condition. However, in the DISABLE position, the switch signals an evacuation-alarm condition to the Emergency Control Center; the center (3-6646) should, therefore, be notified before the switch is operated.

3.5b. Miscellaneous Radiation Monitors

In addition to the facility radiation and contamination alarm system, there are three radiation monitors of primary concern. These are the high-bay radiation Monitron (alarms at 125 mr/hr), the cell-venilation-duct monitor (alarms at 50 mr/hr), and the radiation monitor west of the control room (alarms at 12 r/hr). The instrumentation for these three units should be checked occasionally, in addition to those checks required on the checklist, to be sure the "power on" lights are on. (The first two of these three instruments will place the building in containment when their alarm points are reached.)

3.5c. Procedure for Checking the Systems by Operations Personnel

1. Once a week the 12-8 shift will make a performance test on the evacuation horns and the radiation monitors as follows:

a. Notify the Emergency Control Center (3-6646) that the evacuation horns at the BSR will be tested.

b. Station an operator at the local controls for the horn and instruct him to close the valves on all nitrogen tanks connected to the horn.

c. Announce over the public-address system that there will be a test of the building evacuation horns.

d. Depress the evacuation-horn button (either the one on the console, the one on the FRCAS panel, or the one on the remote console. After about 5 sec, the horn will sound a short blast, the building beacon lights should start flashing, and the horn trouble lights should brighten.

e. Reset the FRCAS panel; have the operator reset the horn solenoid valve manually and open the nitrogen tank valves.

f. Announce over the public-address system that the test is over.

g. Notify the Emergency Control Center that the test is over.

h. Check to be sure that the nitrogen gas supply is not depleted. (If depleted, the red-colored "horn" light will brighten on the FRCAS panel.)

2. Also, once a week on the 12-8 shift request a health physicist to supply a radioactive source and to assist in checking the alarm levels for each radiation monitoring unit. This check should be performed as follows:

a. Announce over the public-address system that there will be a test of the building radiation monitors.

b. As the "caution" and "high-level" alarms are initiated, announce over the public-address system which unit was actuated and the alarm level. Reset the indicator module for each unit before testing the next unit.

c. Log any abnormalities.

d. Announce over the public-address system that the test is completed.

In addition to the checkouts described above, there is a routine performance check made on the radiation monitors by a health physicist once each month.

4. On a monthly basis, personnel from the Instrumentation and Controls Division routinely check various components of the FRCAS. The check-out procedure is shown in Example 3.5.1.

Example 3.5.1. Facility Radiation and Contamination System Checkout Procedure

FACILITY RADIATION AND CONTAMINATION SYSTEM CHECK-OUT PROCEDURE (Continued)

Test	Purpose and Procedure	Correct Operation
	a. Increase radiation at one air monitor to high-alarm level.	Red and yellow lamps on this module become bright and buzzer sounds. Reset buzzer.
	b. Increase radiation at second air monitor in same system to high-alarm level.	Red and yellow lamps become bright on second module and buzzer sounds. Red lamp on evacuation module becomes bright. Reset buzzer.
	c. Remove radiation sources.	Alarm lamps and buzzer may be reset. Evacuation alarm should reset automatically when either alarm is cleared.
	d. Different pairs of instruments should be used each time this test is made.	
	e. Repeat procedure with pairs of monitrons in the Facility Radiation System.	Same results as above except Radiation Evacuation module is tested.
b. Check evacuation alarm equipment	1. Close valve on all horn N_2 supply tanks (if not previously done in Part 1).	
	2. Plug in horn trouble test box at horn control box.	
	3. Move key switch from "Disable" to "Normal."	Alarm lights at Emergency Control Center clear.
	4. Set two coincident "High-Level" alarms on the Facility Contamination System.	Buzzer, channel alarms, and coincidence alarm noted on central panel. Horns sound a short blast, alarm should indicate at Emergency Control Center, and flashing lights outside building should start. Horn trouble lights at central panel become bright. Low-line pressure and low-tank pressure lights show on test box.
	5. Reduce radiation levels to normal and reset alarm modules.	All modules clear, Emergency Control Center alarms clear, and flashing beacons stop.
	6. Reset horn solenoid valves manually; open tank valves until low-pressure alarms on test box clear.	Gas cylinder pressure gauges should show >1000 psi on tank side of regulator and between 80 and 100 psi on horn side. Neither high-pressure nor low-pressure alarms should show on test box. Horn trouble light becomes dim. All alarms in all locations should be clear.
	7. Test high-pressure alarm by raising pressure regulator setting in horn box to more than 110 psi.	Horn trouble light should be on. High-pressure alarm is indicated by test box.
	8. Close tank valves. Set two coincidence alarms on Facility Radiation System.	Buzzer, channel alarms, and coincidence alarm noted on central panel. Horns sound a short blast, alarm should indicate at Emergency Control Center, and flashing lights outside building should start. Horn trouble lights at central panel become bright. Low pressure alarm lights on test box are lighted.
	9. Repeat step 5.	
	10. Repeat step 6.	
	11. Close valves on tanks and push manual evacuation button.	Same as step 4, except no buzzer, no channel alarms, and only a radiation (red) light appears at the central panel and at the Emergency Control Center.
	12. Reset manual evacuation button and repeat step 6.	End of test
c. Conclude test	Return all controls and instruments to normal condition.	Check List 1. Key switch is in "normal" position. 2. No alarm lights on control panel of Emergency Control Center. 3. One gas tank at horn should have valves open, one should have valves closed. Regulator should be adjusted to 100 psi. 4. Notify Emergency Control Center and building personnel of end of test period.

Example 3.5.1 (continued)

FACILITY RADIATION AND CONTAMINATION SYSTEM CHECK-OUT PROCEDURE

BUILDING 3010

Test	Purpose and Procedure	Correct Operation
1. Preliminary	Prepare to test system.	
a. Disable evacuation portion of system	1. Contact Emergency Control Center (phone 3-6646) and notify dispatcher of coming alarm.	
	2. Obtain clearance from the operator and have test announced on public address system.	
	3. Turn key switch to "Disable" and close valves on N_2 tanks for whistles.	Disconnects evacuation whistles and beacon lights. Gives evacuation alarm signal at Emergency Control Center.
b. Check panel lamps	Examine all panel lamps.	All lamps are dim.
2. Facility Beta-Gamma Contamination System	Test all monitors individually (see checkout sheets for locations).	
a. "Inoperative" alarm	1. Unplug instrument.	Buzzer sounds and white lamp glows brightly. Buzzer can be reset, but lamp cannot be reset.
	2. Plug in instrument.	After 1-min delay, white lamp will reset.
b. "Caution" alarm	1. Increase gamma count rate with source to caution-alarm level.	Buzzer sounds and yellow lamp glows brightly. Buzzer can be reset, but lamp cannot be reset.
	2. Remove source until the count rate is below caution level.	Yellow lamp can be reset.
c. "High-Level" alarm	1. Increase count rate with source to high-alarm level.	Buzzer sounds and yellow and red lamps glow brightly. Buzzer can be reset, but neither lamp can be reset.
	2. Remove source; reset instrument.	Yellow and red lamps can be reset.
3. Facility Radiation System	Test all monitrons individually (see checkout sheets for locations).	
a. "Inoperative" alarm	1. Unplug instrument.	Buzzer sounds and white lamp glows brightly. Buzzer can be reset, but lamp cannot be reset.
	2. Plug in instrument.	After 1-min delay, white lamp will reset.
b. "Caution" alarm	1. Increase radiation level with source to 7.5 mr/hr.	Buzzer sounds and yellow lamp glows brightly. Buzzer can be reset, but lamp cannot be reset.
	2. Remove source until radiation level is less than 7.5 mr/hr.	Yellow lamp can be reset.
c. "High Level" alarm	1. Increase radiation level with source to 23 mr/hr.	Buzzer sounds and red and yellow lamps glow brightly. Buzzer can be reset, but neither lamp can be reset.
	2. Remove source until radiation level is less than 7.5 mr/hr.	Red and yellow lamps can be reset.
d. Return system to normal	Turn key switch to "Normal."	Permits beacon lights and Emergency Control Center indicators to operate on alarm condition. Emergency Control Center alarms will reset.
4. Evacuation System	Check all features of evacuation system for correct operation.	A coincidence of two high-level alarms from Facility Contamination System or Facility Radiation System should operate the evacuation horn, magenta lights outside building should flash, and Building 2500 should receive correct alarm light. Key-switch lockout of horn and lights, and gas tank pressure switch should also be tested.
a. Check for control output from coincidence alarm	1. Turn key switch to "Disable" after contacting Emergency Control Center.	Check Emergency Control Center. A radiation and contamination alarm should be noted there.
	2. Check evacuation modules for radiation and contamination alarm systems.	A coincidence of two high-level alarms from Facility Contamination System or Facility Radiation System should operate the appropriate "Evacuation" module. Red lamps on appropriate module should be bright.

Example 3.5.1 (continued)

FACILITY RADIATION AND CONTAMINATION ALARM SYSTEM CHECK SHEET

MONTHLY ☐
QUARTERLY ☐
ANNUAL ☐

BLDG: 3010
CHECKED BY: _____
DATE: _____

CONTAMINATION		INOP.	RADIATION					
MONITOR	LOCATION	AC OFF	METER	CAUTION	HIGH	REMOTE		REMARKS
CAM 1	BSR Control Room							
CAM 2	Pool North							
CAM 3	FCA Control Room							
RADIATION								
M 1	Pool East		X					
M 2	Pool North		X					
M 3	Pool West		X					

EVACUATION SYSTEM

MONITOR	LOCATION	EVAC.	CONTAIN	REMARKS
BETA-GAMMA CONTAMINATION				
CAM 1	BSR Control Room			
CAM 2	Pool North			
CAM 3	FCA Control Room			
Coincidence modules checked using station _____ with all other modules.				
GAMMA RADIATION				
M 1	Pool East			
M 2	Pool North			
M 3	Pool West			
Coincidence modules checked using station _____ with all other modules.				

*Manual evacuation checked: Local ☐
Remote ☐

BEACON*	LOCATION	ON	ROTATING	HORN	LOCATION	ALARM LIGHTS		CYL. PRESS. (PSIG)		
						LOW CYL.	LOW HORN	HIGH HORN	LOW	HIGH
1	Bldg. Corner SW			1	Bay Area					
2	Bldg. Corner NW									
3	Bldg. Corner NE									
4	Bldg. Corner SE									

ALARMS AT BLDG. 2500—KEY SWITCH DISABLED: Radiation _____ Contamination _____ Buzzer _____.

*Quarterly and annual checks only.

4. REACTOR COMPONENTS AND REACTIVITY CONTROL

4.1. Introduction

There are four principal areas of concern regarding the handling of fuel at the BSR. The first is the problem of maintaining the reactor itself within specified limits of excess reactivity. The second involves maintaining a place of storage outside the reactor that is safe by both criticality and radiation standards. Third, fuel movements must be scheduled and performed to minimize personnel radiation exposure, as well as to retain criticality safety. Fourth, records must be maintained to indicate the location, amount, and condition of all fissionable material within the BSR area.

4.2. General Precautions

1. All procedures involving the moving of fuel, experiments, or the reactor must be understood before attempting any of these tasks.
2. Heavy or ordinary water should never be stored in the BSR vault.
3. Care must be taken not to subvert criticality safety by suspending experiments containing fissionable material near fuel storage racks; as a general rule, at least 12 in. of separation should be maintained.
4. The reactor may never be repositioned while it is being operated.
5. It should always be assumed that all material stored in the BSR pool is highly radioactive unless proven otherwise.
6. The lids on the fuel racks should be closed after fuel transfers are completed.

4.3. Fuel Units

4.3a. References

1. M 20310 EJ 002, BSF Standard Fuel Element - Assembly
2. M 20310 EJ 003, BSF Standard Fuel Element - Detail Sheet 1
3. M 20310 EJ 004, BSF Standard Fuel Element - Detail Sheet 2
4. M 20310 EJ 005, BSF Control Rod Fuel Element - Assembly
5. M 20310 EJ 006, BSF Control Rod Fuel Element - Detail Sheet 1
6. M 20310 EJ 007, BSF Control Rod Fuel Element - Detail Sheet 2
7. M 20310 EJ 008, BSF Control Rod Fuel Element - Guide

4.3b. Description

1. Regular Fuel Elements. - The fuel elements used at the BSR are 18-plate assemblies equipped with a cylindrical end box at the bottom section and a handling bar at the top section. Each new fuel element has ~190 g of ^{235}U distributed equally among the 18 fuel plates (see Figure 4.3.1). Selected reference dimensions for BSR fuel elements are given in Table 4.3.1.

2. Control-Rod Fuel Elements. - There are special fuel elements for the five shim rods and the one shim-regulating rod. These elements (see Figure 4.3.2) are sometimes called "half" fuel elements because the central nine fuel plates are omitted from the assembly. Instead of the fuel plates, a shim-rod-guide section is located in the central portion of the element. When the shim rods and the shim-regulating rod are installed in the reactor, they occupy this central portion of the element. At the upper end of the assembled element is a flange to which the lower

ORNL DWG. 65-3145A

Light-water-moderated Reactor: Type II. Heterogeneous—Enriched Fuel

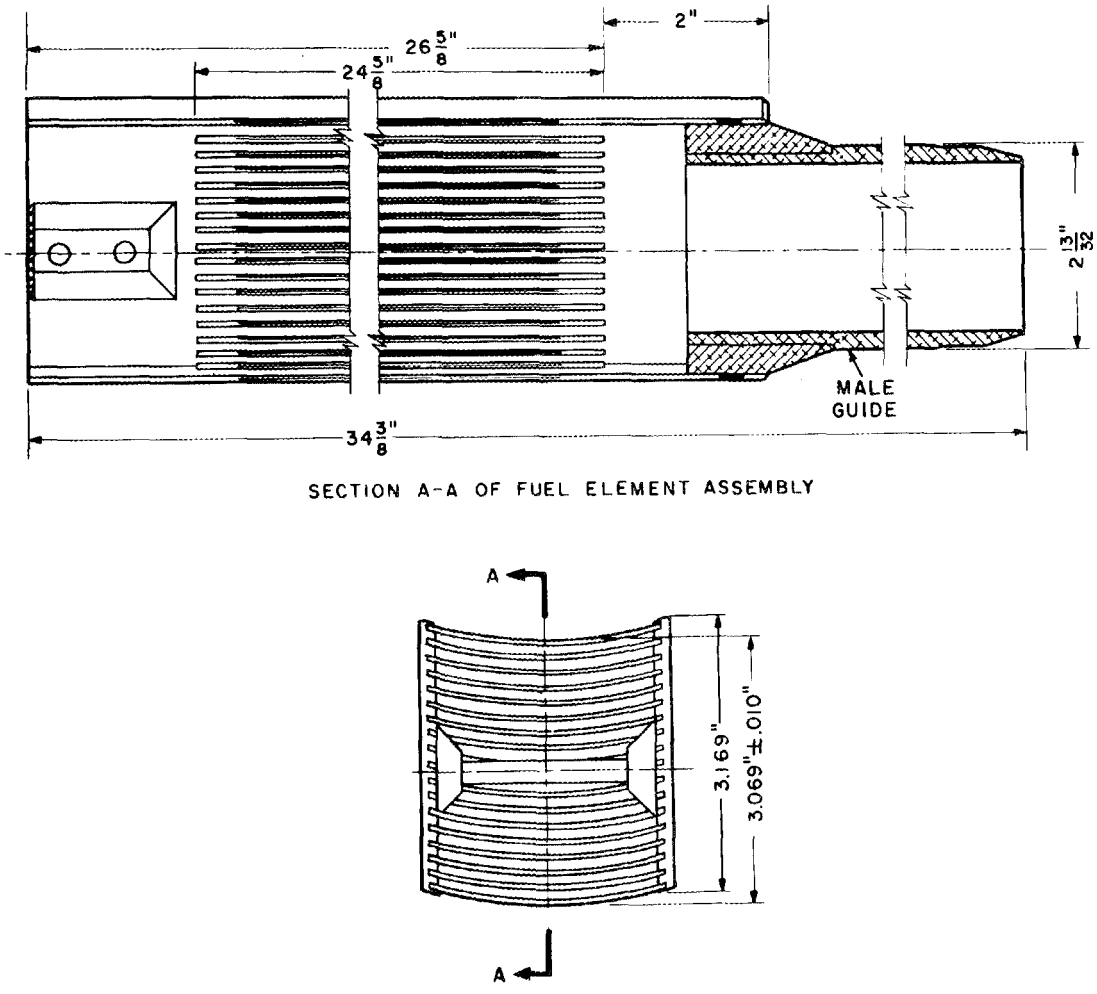

Fig. 4.3.1. BSR Fuel Element

ORNL DWG. 65-3146

Research Reactors

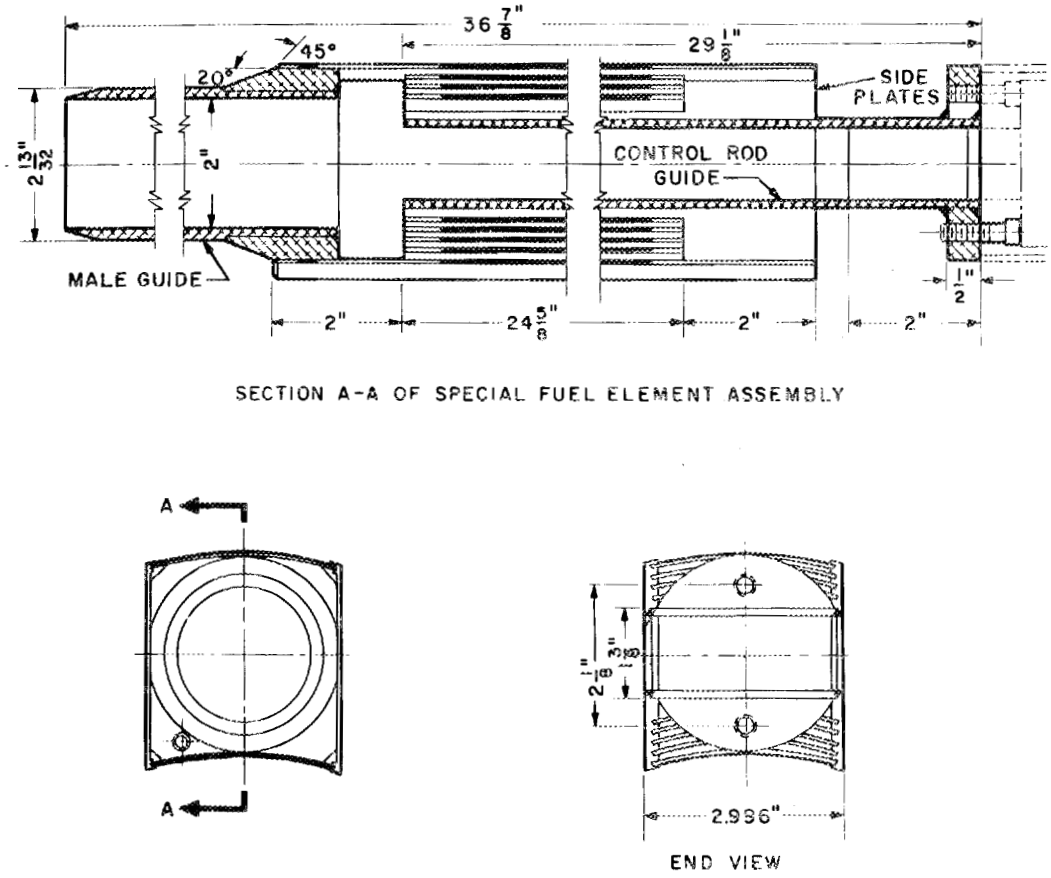

Special fuel element for control rod.

Fig. 4.3.2. Special Fuel Element for Control Rod

Table 4.3.1. Selected Reference Dimensions for BSR Fuel Elements

Unit	Nominal Dimension (in.)
Element Assembly	
Length	34 3/8
Width (through side plates)	2.996
Width (through outside fuel plates)	3.069
Plate spacing	0.117
Inside Fuel Plates	
Thickness (overall)	0.060
Length (overall)	24 5/8
Clad thickness	0.020
Core (alloy) thickness	0.020
Core (alloy) length	23 5/8
Width (before bending)	2.845
Outside Fuel Plates	
Thickness (overall)	0.060
Length (overall)	28 5/8
Clad thickness	0.020
Core (alloy) thickness	0.020
Core (alloy) length	23 5/8
Width (before bending)	2.845

section of the magnet guide tube is bolted, as shown in Figure 4.3.2. Each new element contains ~95 g of ^{235}U and is 36 7/8 in. in length.

4.3c. Fuel Storage - General Requirements

Fuel storage is defined as the temporary retention of fissionable material outside of the reactor core. This material will normally be in the form of standard and "half" fuel units; however, fissionable material belonging to research groups may also be stored.

The methods of preventing and/or handling criticality hazards outside of the reactor core must be approved by the ORNL Criticality Review Committee. The design of fuel-unit storage racks and transfer casks is approved, in writing, by the chairman of that committee. Design of storage racks for BSR fuel is based on data obtained from critical-mass experiments.

Two 30-place aluminum storage racks, for irradiated fuel elements, sit on the floor of the north pool. Each rack has safety lids that may be locked in the closed position. There is also one poolside rack capable of storing 12 fuel elements in a 2 x 6 configuration. This rack is suspended from the east wall of the north pool and can be used for holding the control-rod elements during assembly or disassembly of control-rod drive units.

Fuel elements presenting no radiation hazard (new, unirradiated elements and some used elements) are stored in a vault west of the BSR building. Storage of heavy water or ordinary water in this area is forbidden.

Storage of fissionable material belonging to research groups is more flexible. Experiments are normally suspended in the pool from the bridge

or from the side of the pool. Care must be taken not to subvert criticality safety by suspending experiments containing fissionable material near standard storage racks; as a general rule, at least 12 in. of separation should be maintained. (Special problems associated with a particular experiment are brought to the attention of the BSR operating staff by the Technical Assistance Department, Operations Division.)

4.3d. Shipping Fuel Elements from the BSR Pool

Procedures and equipment for shipping irradiated fuel elements from the BSR pool must be approved by the Criticality Review Committee. Ordinarily, these elements are removed one at a time in an LITR fuel carrier.

With the use of the crane, the carrier is lowered into the water to a depth of approximately 10 ft. The carrier lid is removed (normally with a rope); and the element, after being identified, is transferred into the carrier. (A hook and a rope have been utilized to make this transfer.) After the lid is replaced and as the carrier is raised out of the water, a health physicist must be present to monitor the radiation level. He will record all pertinent information on the standard radiation tag and tie this tag to the carrier. A plastic bag is to be placed around the bottom section of the carrier. (See Section 9.2f for details on shipping irradiated materials.)

4.4. Control Rods and Drives

4.4a. References

1. RC 15-3-3A, Shim Regulating Rod
2. RC 15-3-3B, Shim-Safety Rod Drive - Assembly
3. RC 15-3-3C, Shim-Safety Rod Drive Detail - Sheet 1
4. RC 15-3-3D, Shim-Safety Rod Drive Detail - Sheet 2
5. RC 15-3-3E, Shim-Safety Rod Drive Detail - Sheet 3
6. RC 15-3-3F, Shim-Safety Rod Drive Detail - Sheet 4
7. RC 15-3-4A, Magnet Coil - Assembly and Details
8. RC -3-4B, Shim and Regulating Rod Guide Tube Access - Detail Sheet 3
9. RC 15-3-4C, Lift Tube and Drive Accessories - Details
10. RC 15-3-4D, Magnet Coil - Details
11. RC 15-3-6A, Dual Synchro Mount - Details
12. RC 15-3-6B, Dual Synchro Mount - Assembly and Details
13. M 11240 PF 001, Parts for BSR Boron-Stainless Steel Shim Rod - Details
14. M 20310 PF 002, Universal Joint for Magnet Keeper - Assembly and Details

4.4b. Description

The BSR normally contains six control rods, each of which contains a boron, stainless steel "neutron-poison" section. The rods are oval (see Figure 4.4.1). They have a 24-in. vertical stroke within the control-rod fuel elements. These elements are flanged to guide tubes that extend several feet above the reactor bridge and are fastened to the bridge structure by the hold-down arms (see Figure 4.7.1). The guide tubes

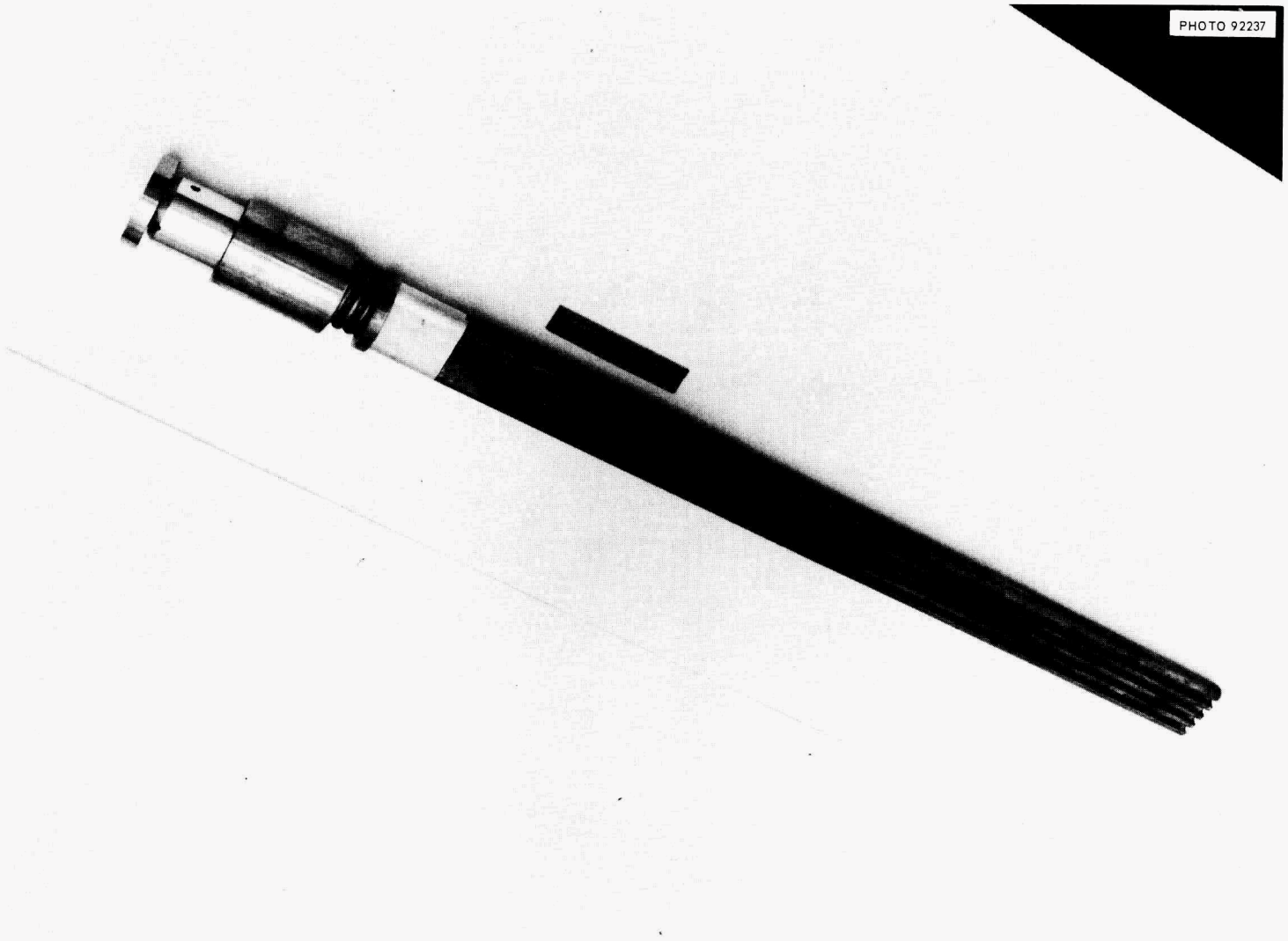

Fig. 4.4.1. BSR Control Rod

serve a dual purpose in that they both guide the rod drive and hold the special fuel element in place during control-rod withdrawal. An in-line drive unit (consisting of an electric motor, position transmitters, limit switches, etc.) is attached to the top of each guide tube. (Details of the rod-drive mechanism are shown in Figure 4.4.2.) The motors drive lead screws which are mechanically attached to the lift tubes located within the guide tubes. The lower end of each guide tube contains a shock-absorber cup (not shown), a bottom stop (or seat) for the top of the rod, and mechanically operated seat switches. The top of each shim rod is equipped with a magnet armature and a piston-and-spring assembly to provide shock-absorber action. The lower end of each shim-rod-drive lift tube is equipped with an electromagnet which, during reactor operation, is mated to the magnet armature (attached to the top of the shim rod).

The integral reactivity worth of each rod in a typical loading is as follows:

Rod No.	% $\Delta k/k$
1	1.840
2	1.849
3	2.759
4	2.958
5	0.946
6	1.015

The regulating rod in the BSR consists of a restricted amount of the stroke of the No. 4 control rod; the servo system is allowed to control the rod within this restricted amount of stroke. All of the BSR control rods have a motor-driven withdrawal speed of about 0.1 in/sec.

MATERIALS LIST					
ITEM NO.	DWG. NO.	QTY.	NAME	SIZE	MATERIAL

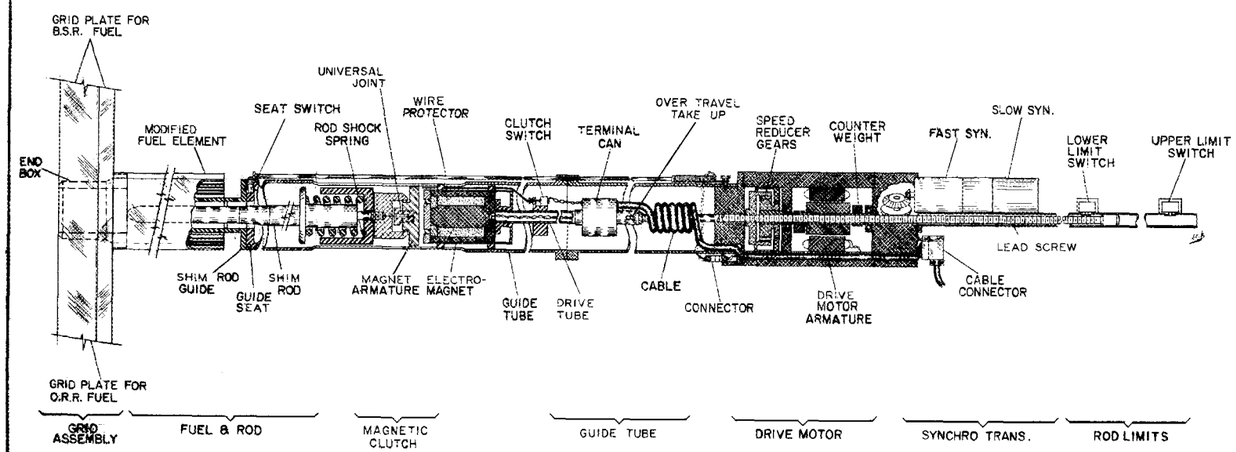

FIGURE #3

NO.	REVISIONS	DATE	APPR.	APPR.
1	ADDED UNIVERSAL JOINT	4-29-68	[illegible]	

DRAWING NO. [illegible]

DRAWN	DATE	CHECKED	DATE	APPROVED	DATE
[illegible]	1-7-57				
DESIGNED	DATE	SUBMITTED	DATE	APPROVED	DATE
HEALTH PHYSICS		MEDICAL		OPERATIONS	SAFETY
FIRE PROTECTION		RESEARCH SHOP		MAINTENANCE	

THIS DRAWING CLASSIFIED
AS UNCLASSIFIED
PER E.R.E.P.L.E.R.
SCALE: NONE

REFERENCE DRAWINGS	DWG. NO.

POOL TYPE CRITICAL FACILITY BLDG. 3010

CONTROL ROD ASSEMBLY

OAK RIDGE NATIONAL LABORATORY
OPERATED BY
UNION CARBIDE NUCLEAR COMPANY
A DIVISION OF UNION CARBIDE AND CARBON CORPORATION
OAK RIDGE, TENNESSEE

SUBMITTED	ACCEPTED	APPROVED

RCB-3147 A

Fig. 4.4.2. BSR-PCA Control Drive Mechanism

Since the regulating rod has a maximum differential worth of slightly more than 0.2% $\Delta k/k$ per in., the maximum rate at which it can add reactivity to the core is about 0.02% $\Delta k/k$ per sec. The total stroke of the regulating rod is always limited to $\leq$0.5% $\Delta k/k$; this limit prevents failure of the servo system from causing the reactor to be made prompt critical. (For detailed information on rod worths, see Section 4.5b.)

4.5. Core Loadings

4.5a. Introduction

Decisions to reload the BSR core and any changes intended in the configuration of the core will originate with the reactor supervisor. This section covers those special procedures that are required when such changes are to be made.

4.5b. Reactivity Worth of the Control Rods

When preparing reactor loadings, the effect on rod worths is always evaluated. In addition to the limits on maximum excess reactivity and maximum worth of the core (with respect to rod worth), a minimum shutdown margin is also included in the evaluation. The minimum shutdown margin (50% of the worth of the control rods) is always greater than the worth of the experiment with the greatest reactivity effect.

Typical reactivity worths of the rods, as determined by the period measurement technique, are shown in Figures 4.5.1 through 4.5.9; from these values, reactivity worths of experiments have been determined.[2]

4.5c. Core Loadings

On occasion it will be necessary to make changes in the fuel content of the core by replacing low-weight fuel elements with elements containing more fuel. This is neceessary to retain sufficient excess reactivity to permit the desirable flexibility in meeting operating schedules. The criterion exercised in preparing and obtaining these conditions for continuity of operation is that the maximum excess reactivity in the core does not exceed 50% of the shutdown capabilities of the control rods.

---

[2] W. H. Tabor, Bulk Shielding Facility Quarterly Report - January, February, and March of 1967 (May 23, 1967).

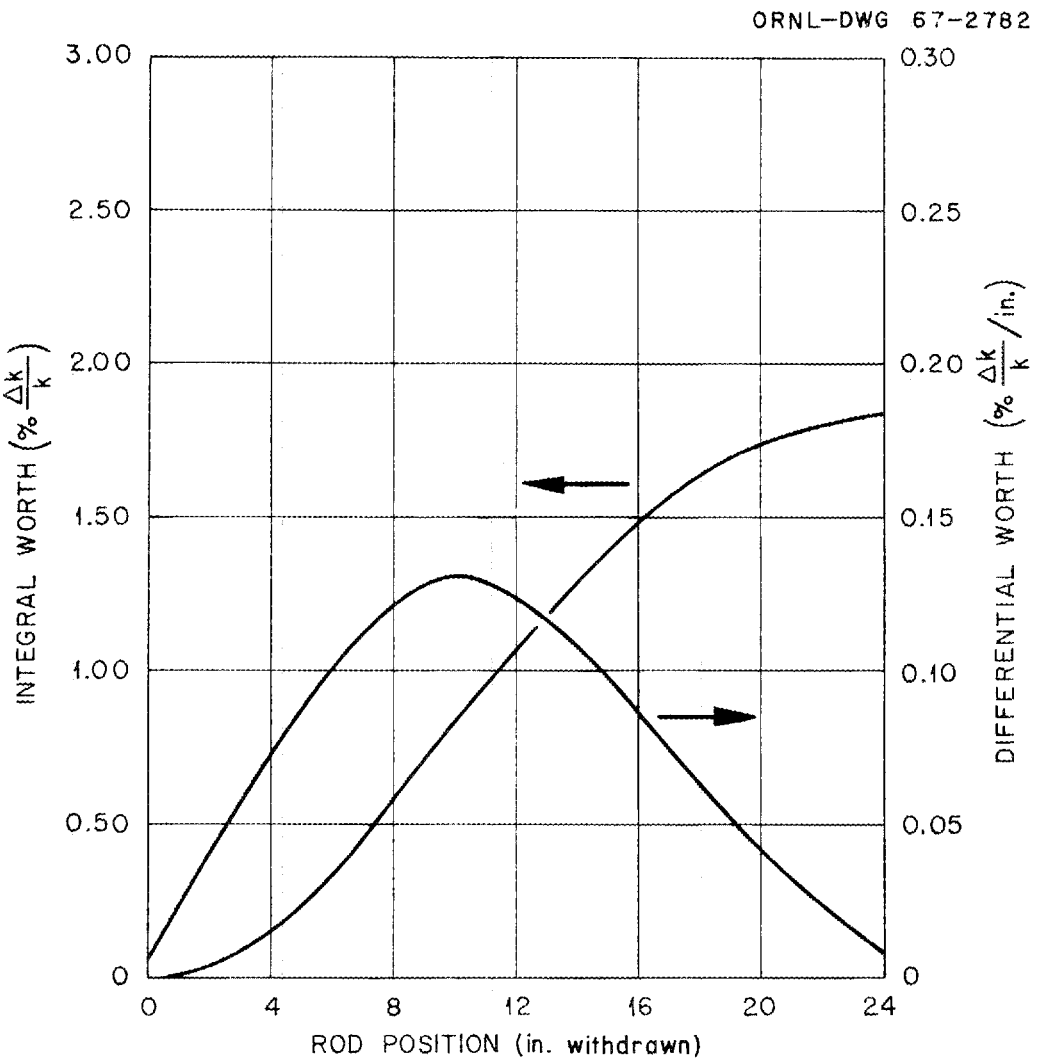

Fig. 4.5.1. No. 1 Shim-Rod Calibration

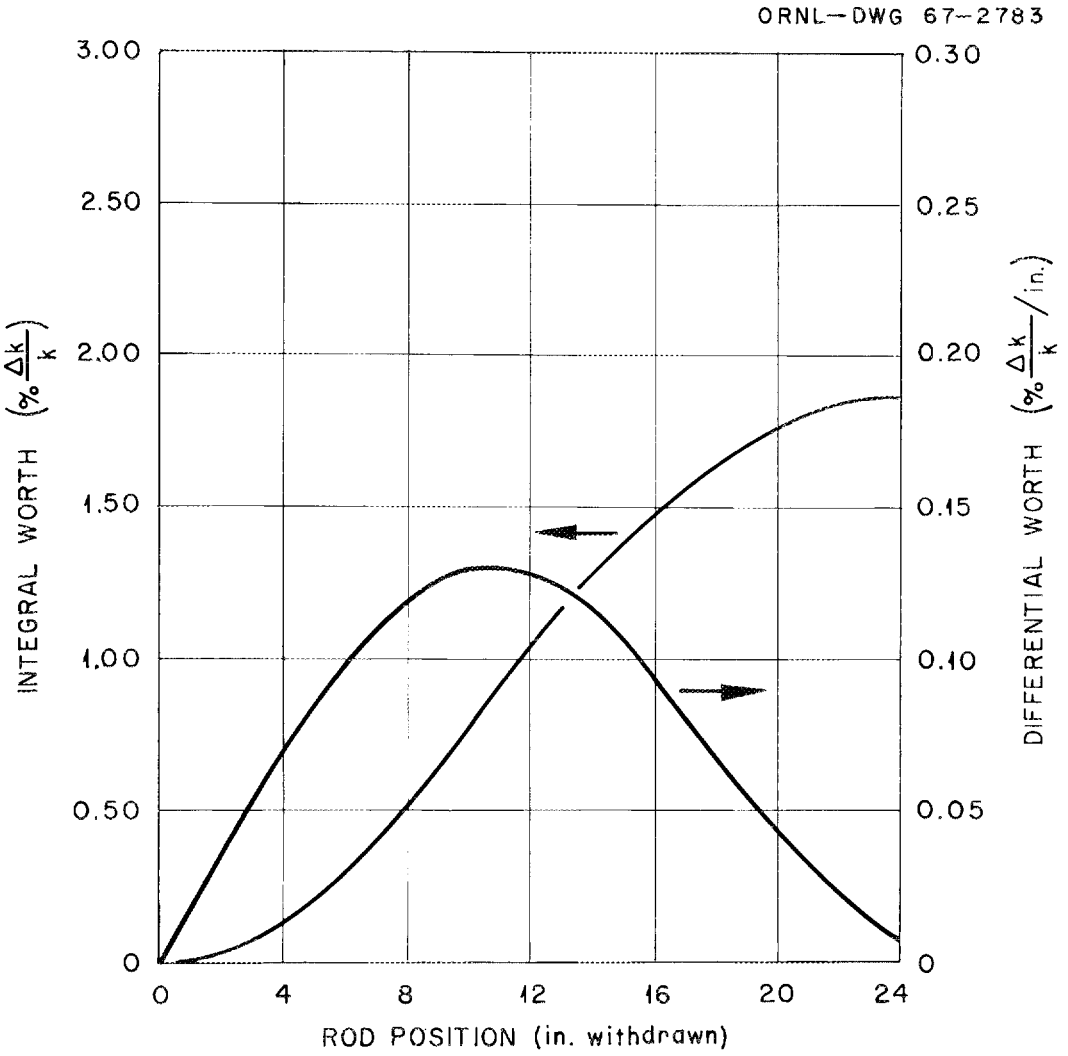

Fig. 4.5.2. No. 2 Shim-Rod Calibration

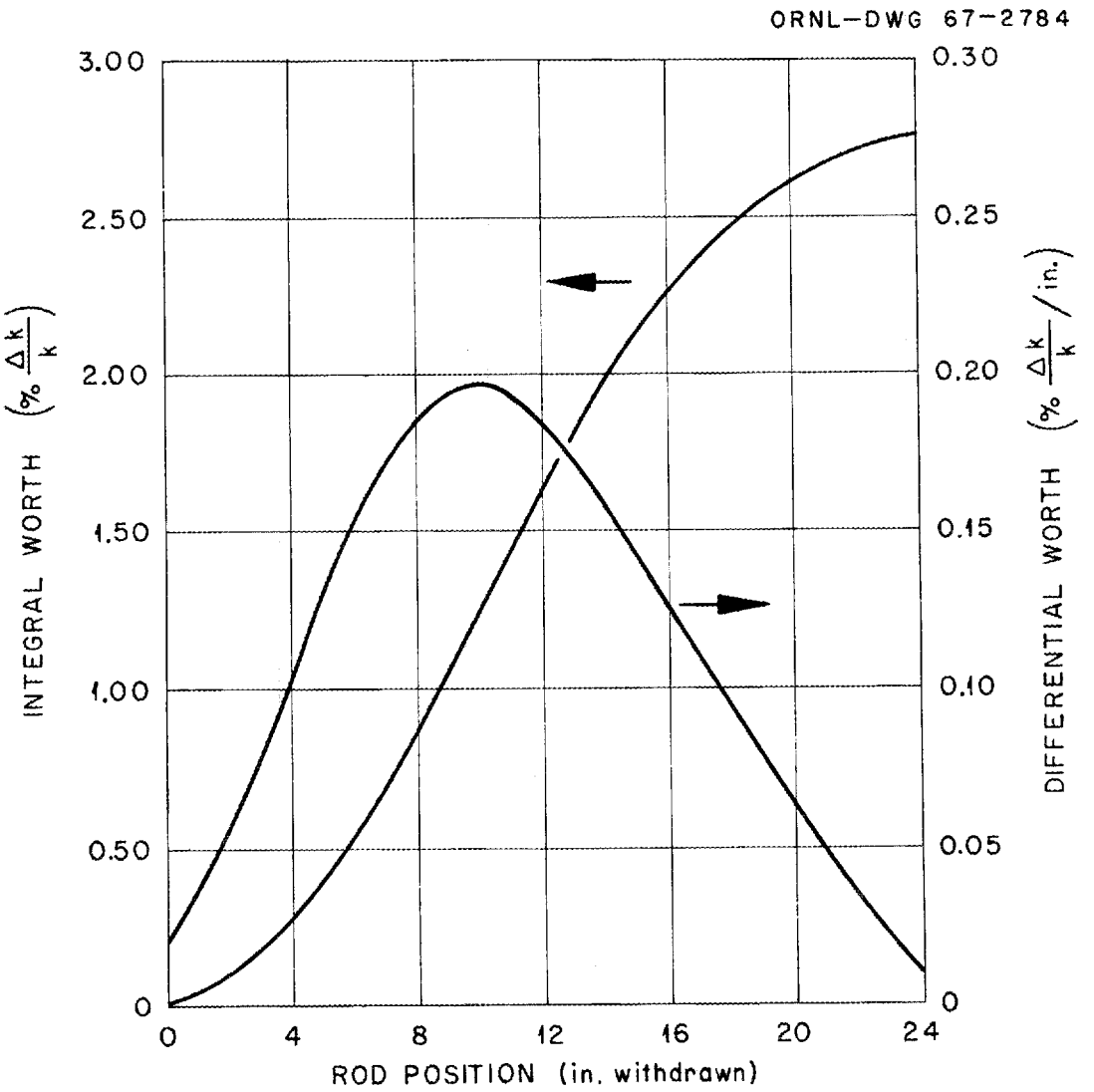

Fig. 4.5.3. No. 3 Shim-Rod Calibration

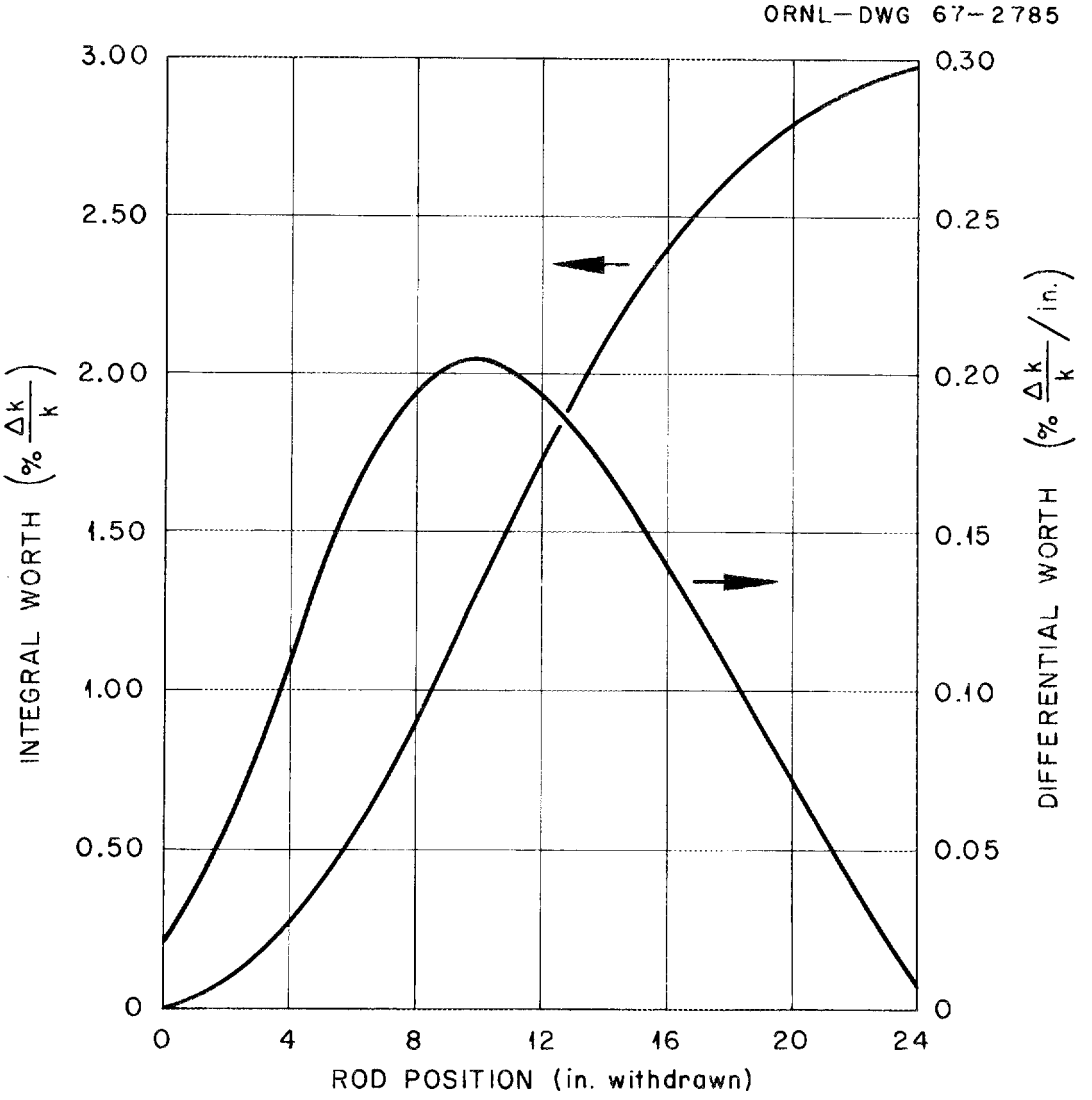

Fig. 4.5.4. No. 4 Shim-Rod Calibration

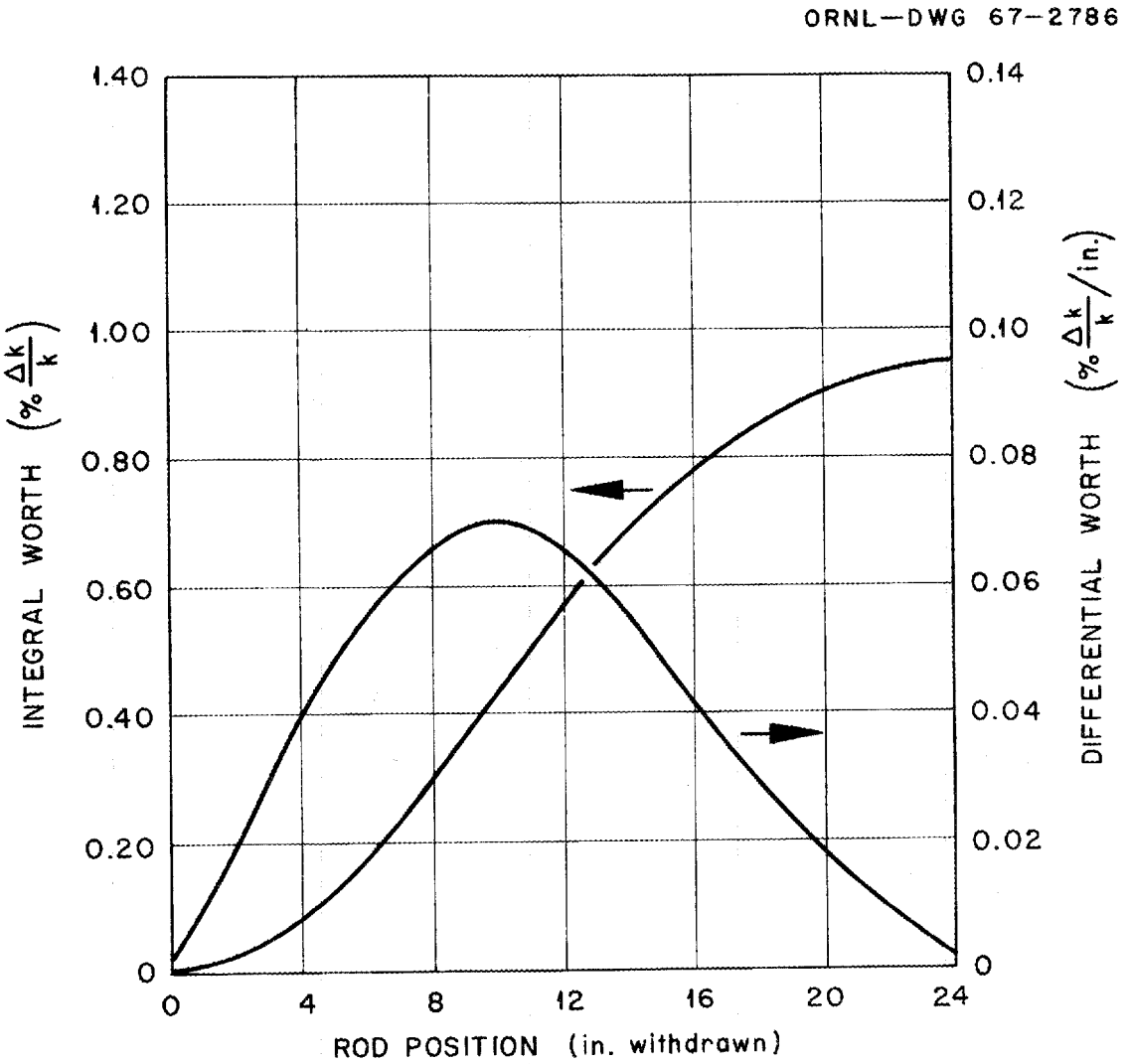

Fig. 4.5.5. No. 5 Shim-Rod Calibration

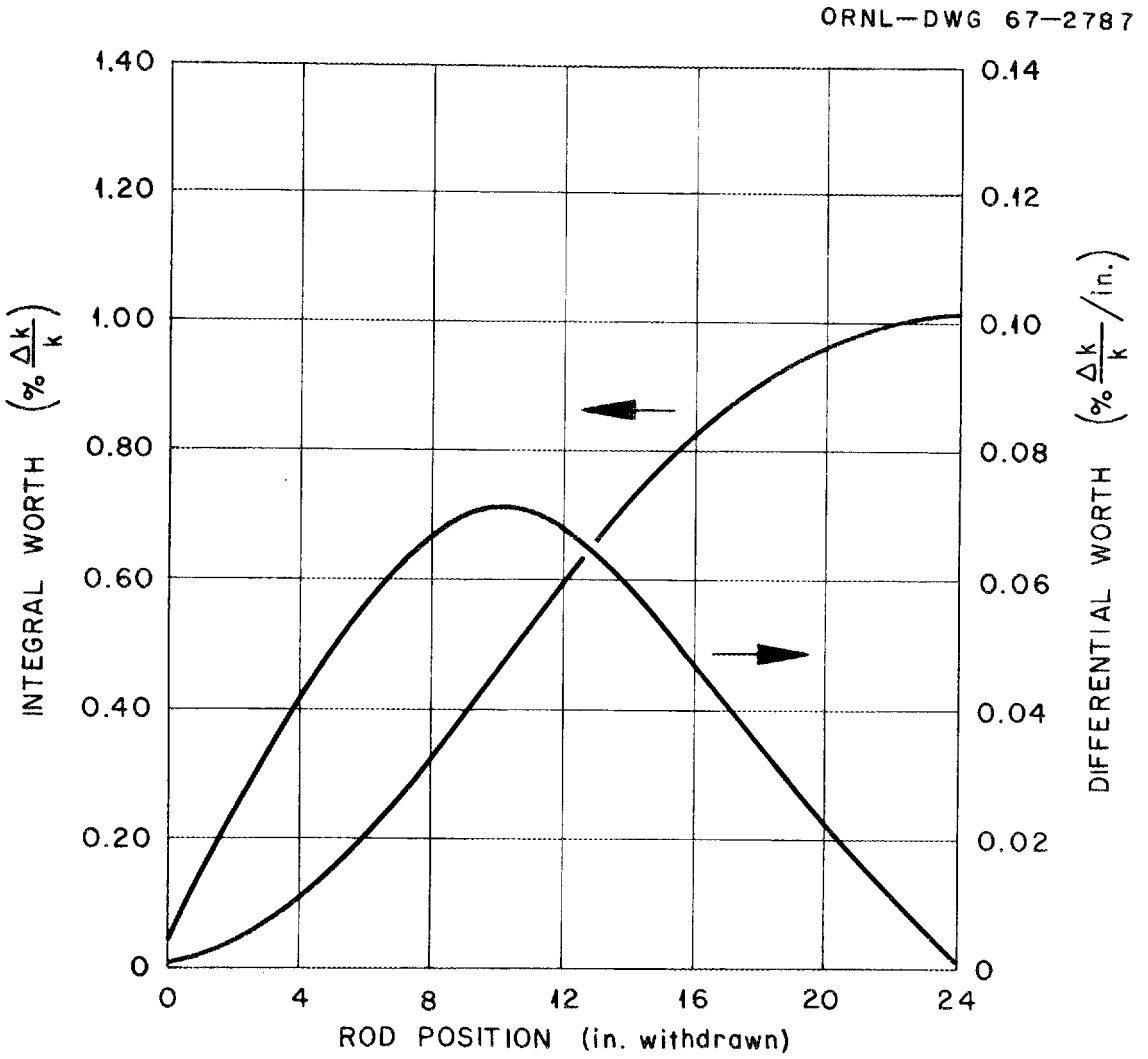

Fig. 4.5.6. No. 6 Shim-Rod Calibration

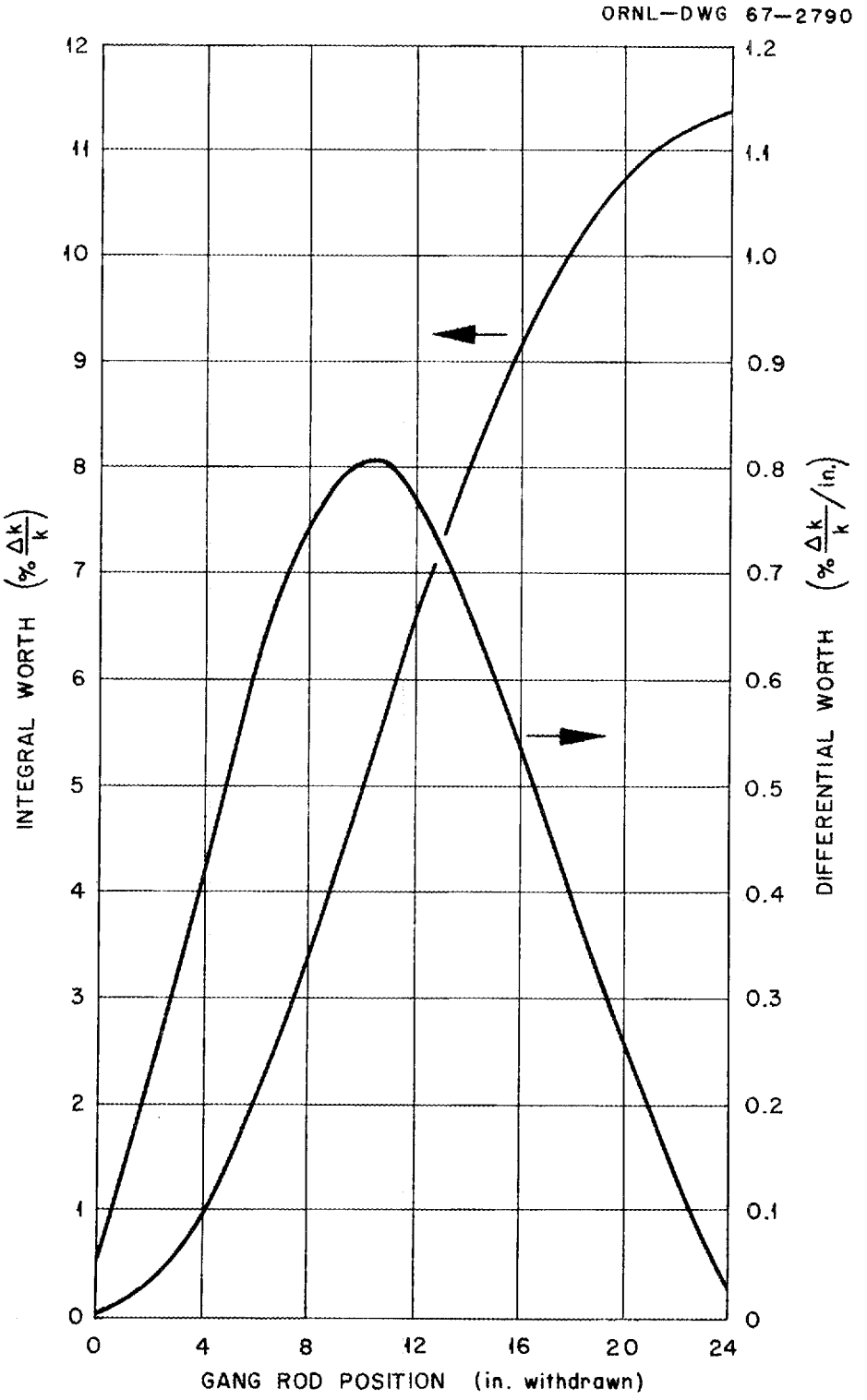

Fig. 4.5.7. Differential and Integral Worth of Shim Rods 1 Through 6

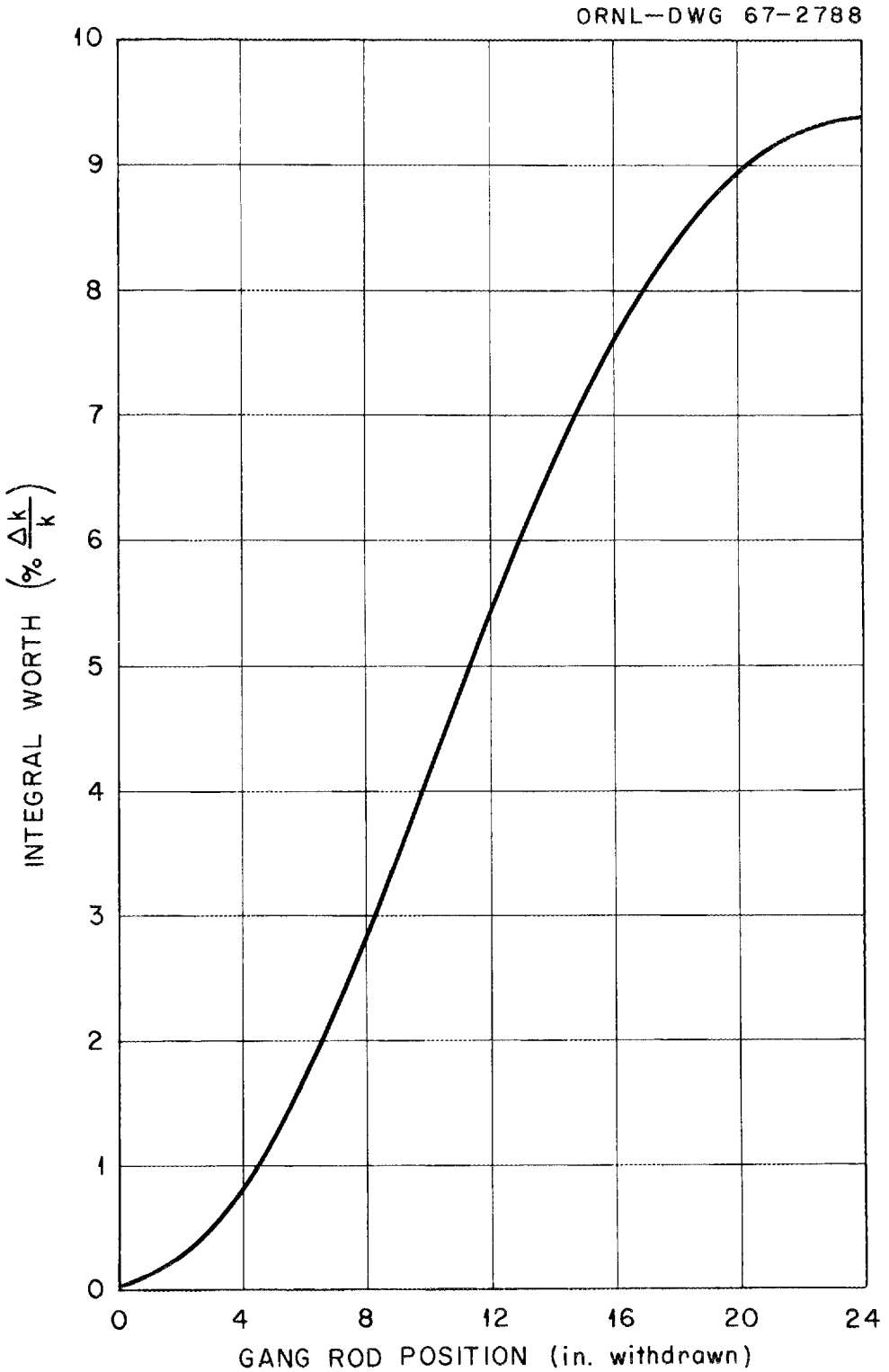

Fig. 4.5.8. Integral Worth of Rods 1 Through 4

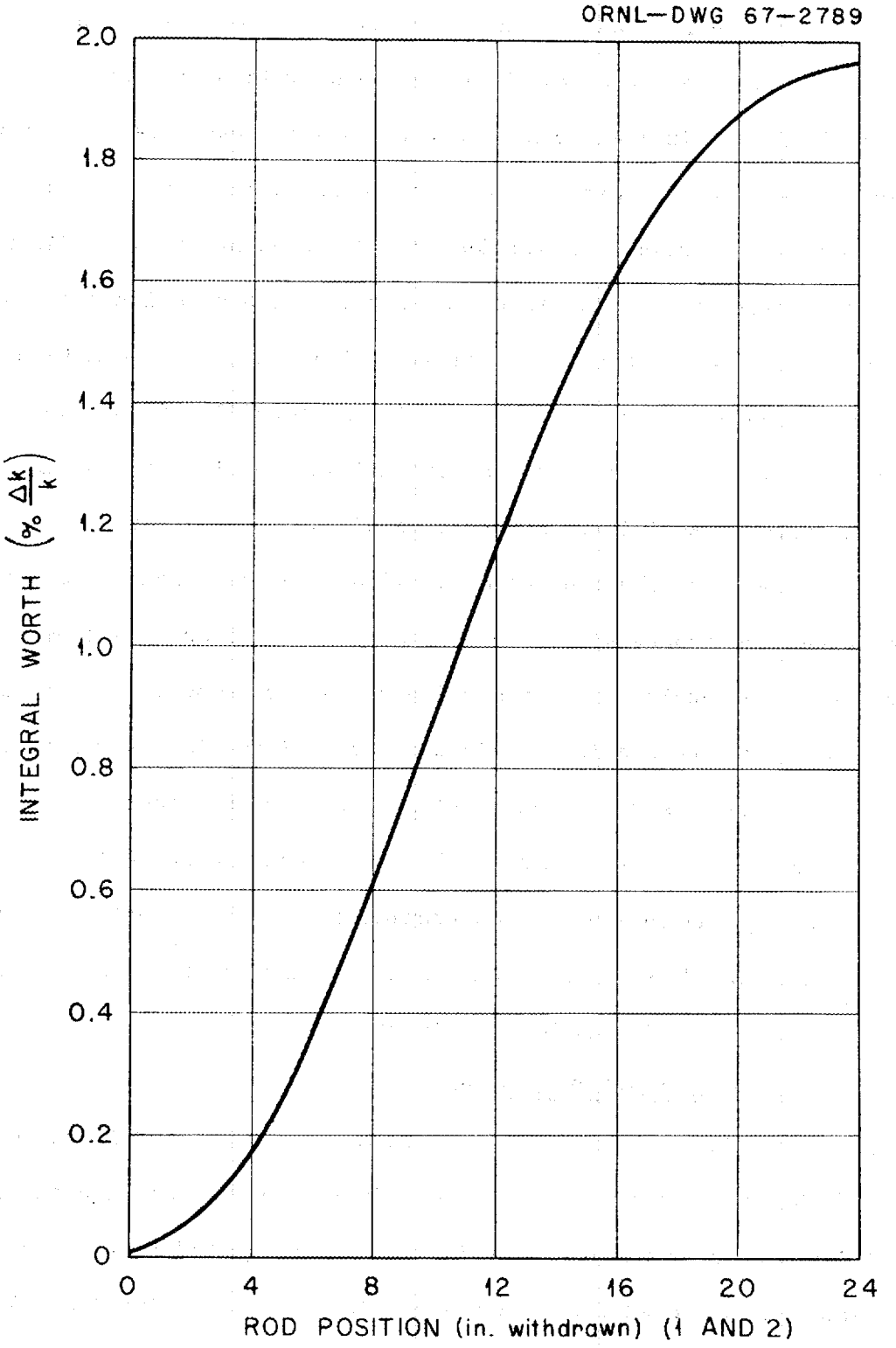

Fig. 4.5.9. Integral Worth of Rods 5 and 6

Replacement core loadings which are used to meet these conditions are prepared by an engineer of the Operations Division and presented on the form indicated in Example No. 4.5.1. This proposed fuel addition and/or fuel element relocation within the core is reviewed and approved by the reactor supervisor or his designated representative. Additional information approved by the reactor supervisor or his designated representative supplements this core loading giving detailed information relative to sequence of fuel moves, where in the schedule, if needed, a critical run is needed to obtain additional information for maximum addition of excess reactivity, and other pertinent instructions.

The movement of the fuel elements within the core region is performed under the supervision of a BSR supervisor. Each fuel element is identified immediately before insertion and after removal from the core and/or during the relocating within the core. Specific instructions are given by the supervisor for each fuel movement and he assures that movements comply with the written schedule. A Transfer Memo, Example 4.8.3., is completed by the supervisor and transmitted to the department accountability foreman. This information becomes a part of the permanent records as documented in Section 4.8b. of this manual.

4.5d. Approach-to-Critical Procedures

This procedure is provided for special conditions and is to be followed when significant changes are made in the core configuration. Activities requiring the use of this will be designated by the reactor supervisor and approved detailed instructions of the activities will be provided.

Example 4.5.1. BSR Replacement Loadings (UCN-2274)

BSR REPLACEMENT LOADING

PURPOSE: ☐ SCHEDULED RELOADING ☐ UNSCHEDULED RELOADING	ENDING CYCLE	PREPARED BY	CHECKED BY
	BEGINNING CYCLE		

DATE:	ELEMENTS REMOVED		CHANGE IN WEIGHT U^{235}	ELEMENTS INSERTED		
CORE POSITION	OR NUMBER	WEIGHT U^{235}		OR NUMBER	WEIGHT U^{235}	LOCATION
NEW ELEMENTS	**SUBTOTAL**					
	SHIM RODS					
	OTHER UNITS					
	TOTAL					

UCN-2274
(3 2-67)

Unless specifically directed by an approved procedure, the loading should proceed from the inner region to the outer edges (any unloading should be performed by working inward from the outer edges). With this method, no unoccupied position or "hole" will be created during the fuel handling. In addition, all requirements for handling fuel (listed in Section 4.6a) shall be fully satisfied.

1. Movement of Fuel into the Core

a. Duties of personnel

(1) Supervisor - The supervisor will select the fuel unit to be placed in the core. (His choise must not violate the applicable detailed procedure governing the particular test in progress.) He will inform the loading supervisor as to the unit identification number and the receiving core position. (Fuel transfer memos, Example 4.8.3., should be used whenever fuel elements are moved from one location to another.) The supervisor will verify that the control rods are fully inserted. During the movement of the fuel unit, the supervisor will personally monitor the nuclear instrumentation and determine if the unit may remain in the core or must be removed. He will inform the loading supervisor of his decision. During subsequent control-rod movement, he must be present in the control room and must monitor the nuclear instrumentation to determine that the assembled loading is not overly reactive.

(2) Loading Supervisor - The loading supervisor, after receiving instructions from the supervisor, will determine the source (for example, storage-rack position) of the unit. He will instruct the fuel handler to remove the unit from its storage location; he will personally verify that the identification number on the unit is that of the desired unit. When the unit is about to be moved into the vicinity of the core region, he will signal the supervisor that he is ready to load. When the unit is over the desired grid position so that only vertical movement (and minor horizontal movement) is required, he will verify this and signal the supervisor that the unit is entering the core. In addition to being alert to instructions from the supervisor to remove the unit, he will ensure that the fuel handler does not unlatch the handling tool and he will verify that the unit is seated properly. When instructed by the supervisor, the loading supervisor will have the fuel handler unlatch, remove, and store the handling tool. The loading supervisor will then clear the bridges of any personnel and report to the control room for further instructions.

(3) Fuel Handler - The fuel handler will act under the direct supervision of the loading supervisor and will take no action on his own initiative.

b. Requirements

(1) Prior to any test involving a series of fuel additions, the BSR startup checklist shall be completed unless the test follows a previous one for which this checklist was completed and following which the key switch and all instrumentation has remained on. (A reactor supervisor or a reactor foreman of the Operations Division staff must be present in the control room or in the adjacent office at all times when the control switch is in the ON position and the reactor is down.)

(2) The minimum instrumentation required during movement of fuel into the core is identical to that required for startup of the reactor in Mode 1 (listed in Section 2.1e). However, an additional fission-chamber channel will be required during any criticality test which immediately follows replacement of the log-N chamber; i.e., any test which precedes operation at power levels sufficient to allow the proper operation of the log-N channel to be determined. This additional fission-channel shall provide information, but not control action.

(3) Prior to each fuel addition, the control rods will be fully inserted. (In most situations fuel units which are part of control-rod assemblies will be inserted into the core region before any other fuel

unit is so inserted. If it becomes necessary to relocate a control-rod assembly in an already assembled array or partially assembled array, sufficient fuel units will be removed from the vicinity of the subject control-rod assembly so that it can be demonstrated that the reactor is subcritical with all the control rods fully withdrawn.)

(4) Following any fuel addition, the effect of the fuel addition will be determined by withdrawing the control rods. If the reactor is subcritical, the inverse counting rate versus fuel inventory (mass of ^{235}U) will then be plotted to give an extrapolated value for the critical mass. If, due to some difficulty (for example, instrument malfunction), it is not possible or prudent to withdraw the control rods and determine the condition of the reactor, only two alternatives are allowed.

(a) Remove the last fuel added (returning to a core loading for which the condition was previously determined) and complete the shutdown checklist.

(b) Have the difficulty corrected and any involved system checked out. (If this alternative is selected, the supervisor or a reactor foreman must remain in the control room or in the office* until the effect of the fuel addition is determined.)

---

*Immediately adjacent to the control room.

(5) Unless extraordinary circumstances arise (for example, a mandatory evacuation), the reactor supervisor or foreman will remain in the control room following a fuel addition until the shim rods have been withdrawn sufficiently to determine the status of the resultant loading.

2. Movement of Fuel out of the Core. - It may be necessary during some test to remove a fuel unit to adjust the core reactivity. This would normally be followed by insertion of a unit containing more (or less) fuel. Therefore, fuel movement of this type will be performed by individuals approved to occupy the positions indicated earlier. The procedure to be followed will be essentially that outlined in previous sections in which the duties of the individuals were defined. Written instructions from the supervisor, using the standard transfer memo form (Example 4.8.3) are first required. The loading supervisor and the fuel handler will then remove the fuel unit to the required storage location. The supervisor is not required to be present in the control room during this type of move; however, since the control switch will be in the ON position, the control room must be attended by a reactor supervisor or a reactor foreman.

4.5e. Operational Procedures

When a core is to be reloaded or a reactor configuration assembled, records of previous reactor configurations and cores should be reviewed to establish (if possible) a reference or standard of comparison for the

proposed reactor configuration. The proposed core loading will be prepared by an engineer of the Operations Division and submitted to the reactor supervisor on a special form (Example 4.5.1) for his approval. Additional information pertinent to the activities will be supplied. The completed proposal must be signed by the BSR supervisor and proper approvals must be obtained as outlined in the following sections. The following information should be included in the loading proposal for a change in core configuration:

1. Fuel-element and shim-rod-element numbers, locations, and weights.
2. Shim-rod positions and shim-rod numbers.
3. Fission-chamber lattice position.
4. Experiment locations (and types, where important).
5. Location, type, and quantity of all other materials or components in or near the core.
6. The order in which fuel elements (and other components) should be loaded.
7. Points during assembly at which critical runs should be made.

4.6. Core Work - Specific Procedures

4.6a. Requirements for Fuel Handling

Fuel handling at the BSR is accomplished by transfer of an identified fuel unit from a specified location and placing it in another specified location without subverting criticality safety and with minimum radiation exposure to personnel. Certainly, no fuel element is ever to be moved to or from the core with the reactor operating. No fuel unit should be moved unless specified by a written order from the reactor supervisor or his designated alternate.

Fuel handling is accomplished by the operating crew under the direct supervision of the supervisor,* and each fuel unit moved must be identified. The supervisor must personally verify the core or storage-rack position receiving each previously identified unit. This procedure will require the supervisor's presence; however, identification of fuel units may be made by an operator, provided the proper identity number is unknown to him beforehand. A minimum of two persons shall be participating in the movement of fuel elements; one of which must be of supervisory rank.

The supervisor's responsibility, as outlined above, may be delegated to no one except the reactor foreman. A supervisor trainee in final stages of training may be delegated this responsibility if he is an acting supervisor (i.e., with the incumbent serving in caretaker status). At the completion of fuel relocation, a transfer memorandum is prepared by the person who supervised the transfer.

---

*A day shift supervisor, a shift engineer, or a reactor foreman.

The information on the transfer memorandum should also be recorded in the current BSR log book. The following precautions must be followed during fuel transfer.

1. Vertical movement of fuel units (except when in a shipping carrier) must be performed manually.
2. Health Physics coverage is required when removing a fuel unit shipping carrier from the pool. A crew member or supervisor may monitor the radiation level during fuel transfers within the pool.
3. Fuel units must be handled with tools specifically designed for this work. Hooks without guards which prevent the hook from hitting the fuel plates will not be used except during transfer of depleted fuel elements to the shipping carrier.

4.6b. Procedure for Transferring Fuel Elements

1. Removal of a Standard Fuel Element from the Core

   a. With one of the two tools provided (see Figure 4.6.1 and 4.6.2), engage the handling bar of the fuel element with the tool in the unlatched position. (A knob near the top of the tool will, when raised, unlock the latch mechanism.) When the fuel element has been secured (check visually and physically by rotating the tool), raise the element from the grid plate seat.

   b. Remove the element from the core and identify it. Record all data as requested on the standard fuel transfer sheet.

   c. Transfer the element to its designated position in the storage rack and disengage the tool by raising the actuating knob and then lifting the entire tool from the element.

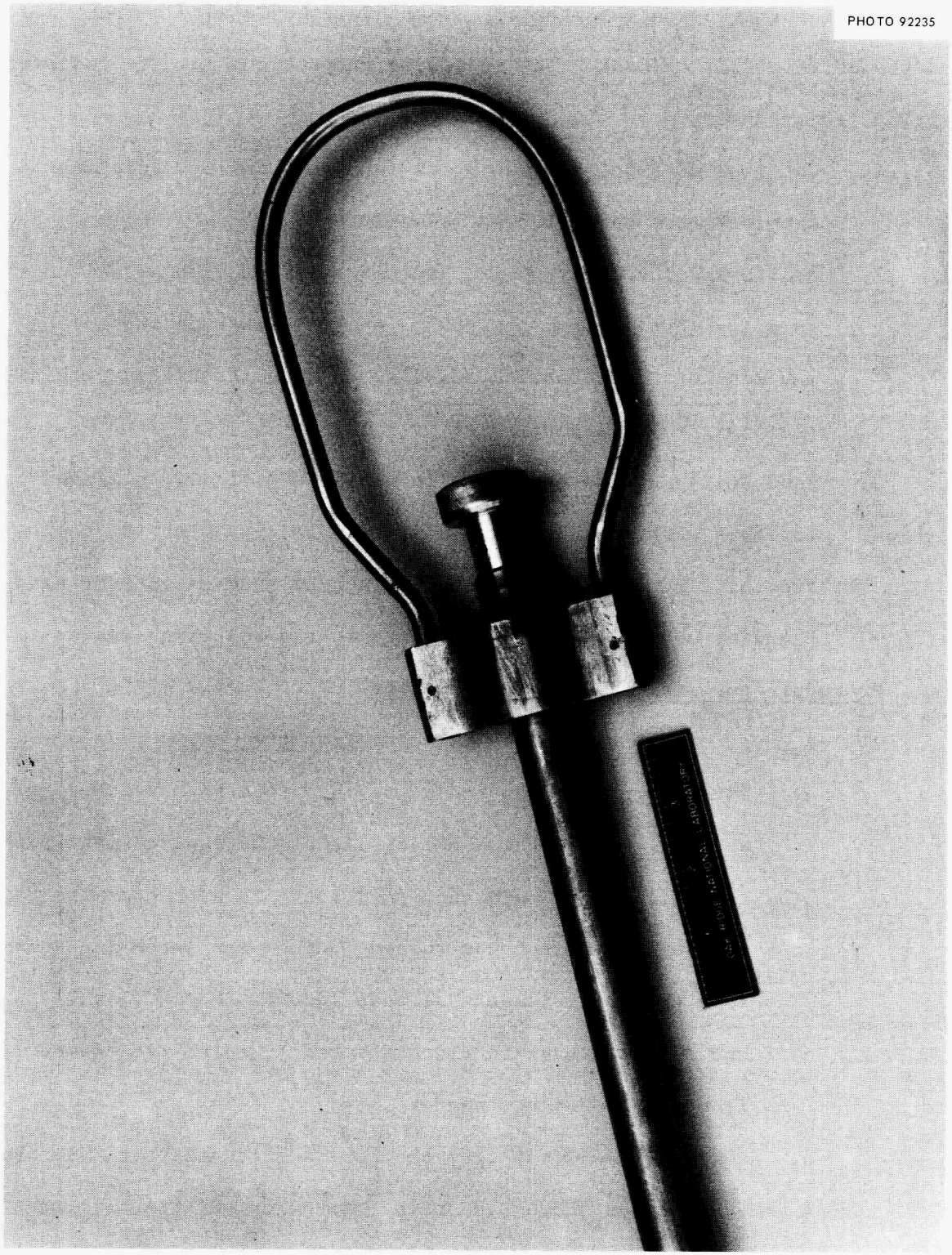

Fig. 4.6.1. Top of Fuel-Handling Tool

Fig. 4.6.2. Bottom of Fuel-Handling Tool

2. Insertion of a Standard Fuel Element into the Core

a. Engage the handling bar of the fuel element, as described above, and remove the element from the storage rack.

b. Identify the element to verify the numbers listed in the loading schedule.

c. Insert the element into the designated core position and visually check to determine proper seating of the end box into the grid plate. (The convex side of the fuel plates faces toward the control room.) If, during the insertion of an element, abnormal deviations of the counting rate are indicated by the audible fission-chamber counting rate system or by personnel stationed in the control room, the element should be immediately removed from the core. An evaluation should be made to determine the cause of the deviation noted.

d. Disengage the tool and remove it from the element. Upon completion of the fuel transfer, all fuel tools should be locked to the reactor bridge.

4.6c. Procedure for Transferring a Control-Rod-Drive Assembly

The control-rod-drive assembly includes the drive unit, guide tube, and control-rod element. Normally, the transfer of a control-rod-drive assembly will be required for only three reasons: replacement of the seat switch; replacement of the control-rod element; or temporary removal of the poison rod for physical checks. Due to the design of the BSR drive assemblies, the same procedure must be followed before any of these objectives can be achieved.

1. Removal and Disassembly of a Drive Assembly*

a. Sufficient fuel units must be removed from the vicinity of the subject control-rod drive assembly so that it can be demonstrated that the reactor is subcritical with all control rods fully withdrawn. (If the subject control rod cannot itself be withdrawn, the results of withdrawal of the other five control rods should be used as a guide to further action. The BSR supervisor should be informed of this situation.)

b. Using the raise mode, withdraw the rod-drive unit to the withdraw limit; i.e., with the reactor in the scram condition.

c. Disconnect the signal-and-motor-lead connector.

d. Attach a choker to the assembly just below the drive motor. This should be attached so as not to damage the seat-switch lead. (NOTE: This procedure describes the removal of the drive assembly as a unit. However, in many cases it is desirable initially to remove and store the drive unit before removing the guide tubes and the attached fuel element which contains the neutron-poison rod. In this case, complete procedure 4.6d and attach the choker to the upper guide tube utilizing one of the screw holes.)

e. Position the overhead-crane hook over the top of the drive assembly and fasten the free end of the choker to the hook.

f. Station a man at the overhead crane breaker box. (This step is required during all times when the crane hook is

*The term "drive assembly" is intended to describe all parts from the drive-motor and limit-switch subassembly to the control-rod fuel element.

to be raised or lowered with potentially highly radioactive components attached to the hook.)

g. Raise the crane hook until the choker is no longer slack.

h. Detach the drive assembly from its hold-down arm. (During this step the drive assembly and any other drive assemblies fastened to the hold-down arm must be held in place manually.)

i. Manually lift the drive assembly until it is free of, and on top of, the grid plate.

j. Raise the crane hook until the choker is no longer slack.

k. Move the assembly with the crane and with manual guidance to the vicinity of the special storage rack on the east wall of the pool.

l. With Health Physics surveillance, slowly raise the assembly until the flange between the upper and lower guide tube is accessible.

m. Disconnect the lower seat-switch-lead connector. Lower the assembly into the special storage rack.

n. Unscrew the flange-retaining screws, and remove the upper guide tube to storage (may include the drive assembly).

o. With the special magnet and power supply, remove the poison rod from out of the control-rod element and the lower guide tube. Attach the poison rod to the poison-rod tool. (If the control-rod drive assembly was removed for physical checks of the poison rod, these checks can be accomplished without proceeding further with this specific procedure; otherwise, continue to the next step.)

p. Working down through the lower guide tube, unscrew the control-rod-element retaining screws. The lower guide tube may then be removed from the control-rod element. (Now, the remaining two possible objectives, replacement of the seat switch or replacement of the control-rod element, may be accomplished.)

2. Assembly and Insertion of a Drive Assembly. - This procedure is, in all general details, the reverse of the procedure for removal and disassembly of a control-rod drive assembly.

4.6d. Procedure for Transferring a Control-Rod-Drive Unit*

Normally, removal of the control-rod-drive unit will not be required except for replacement or readjustment of the clutch switch or except for replacement of the magnet subassembly.

1. Removal of a Drive Unit

a. Since the poison unit will not be removed, no change in core loading will be required.

b. Using the raise mode, withdraw the rod-drive unit to the withdraw limit; i.e., with the reactor in the scram condition.

c. Disconnect the signal-and-motor-lead connector.

d. Disconnect the upper seat-switch-lead connector.

e. Remove the screws which attach the drive unit to the upper drive tube.

*The term "control-rod-drive unit" is intended to describe all parts of the "drive assembly" except for the guide tube, the control-rod element, and the control rod itself.

f. Manually lift the drive unit until the motor housing and the upper junction box are free of the upper guide tube. Install the lifting jig for the drive assembly.

g. Station a man at the overhead crane breaker box. (This step is required during all times when the crane hook is to be raised or lowered with potentially highly radioactive components attached to the hook.)

h. Position the crane hook directly above the drive to be removed, and place the lifting-jig cable loop on the hook.

i. Raise the crane hook until the cable is no longer slack.

j. Manually guide the drive unit (and at the same time raising it with the crane) until it is free of the upper guide tube.

k. Slowly move the unit to the location desired. Surveillance by Health Physics personnel is required for this step.

2. Insertion of a Drive Unit. - This procedure is, in all general details, the reverse of the procedure for removal of a control-rod-drive unit.

4.7. Moving the Reactor Assembly

4.7a. Requirements

Prior to the movement of the reactor to a new location (i.e., a poistion adjacent to, or in the proximity of, any materials other than light water of which the exact magnitude of the reactivity effect is unknown) a procedure will be prepared for removing a sufficient number of fuel elements, experiments, and/or other components and materials and for reloading these in an approach-to-criticality procedure (if required). These procedures require the approval of the reactor supervisor or his designated representative and, in some cases, approval of the Technical Assistance Department. The reactor may be repositioned to a previously used configuration under the direction of a qualified supervisor. NOTE: The reactor must be in a shutdown state prior to any repositioning. (See Figure 4.7.1 for details of the reactor bridge.)

4.7b. Operational Procedures

1. Check the following:
   a. Proximity of the reactor to other fueled materials.
   b. The condition of all experiments, in particular any connections between the reactor and experiments other than those which are designed to be moved as a consequence of movement of the reactor.
   c. The mechanical "stops" on the bridge for possible damage.
2. Actuate the audible count-rate system (turn the toggle switch to the EXTERNAL position and turn on the electrical power to the audio amplifier.)

ORNL DWG. 67-5973

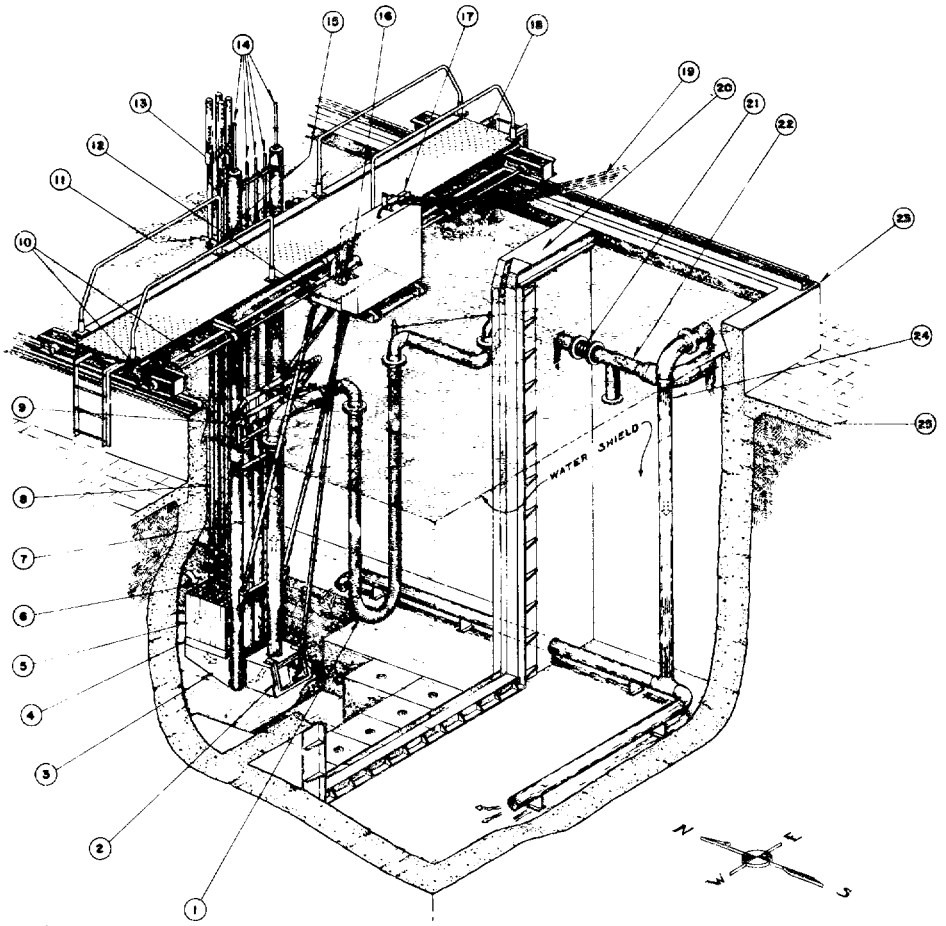

— LEGEND —

1. FLEXIBLE COOLING-WATER LINE
2. NATURAL-CONVECTION-COOLING INLET VALVE
3. WATER MANIFOLD AND REACTOR GRID SUPPORT
4. FUEL-ELEMENT GRID PLATE
5. FUEL ELEMENTS (REACTOR CORE)
6. REACTOR COOLING-WATER INLET
7. IONIZATION CHAMBERS AND GUIDES
8. SHIM-ROD-DRIVE GUIDE TUBES
9. WATER SPRAY SYSTEM FOR NITROGEN-16 DISPERSION
10. NORTH-SOUTH TRAVERSING DRIVE
11. SHIM-ROD-DRIVE LATCH BAR
12. REACTOR SUPPORT CARRIAGE
13. SHIM-ROD DRIVE MOTOR AND GEAR BOX
14. IONIZATION-CHAMBER SUPPORT TUBES
15. REACTOR SUPPORT TUBES
16. INLET-VALVE OPERATOR
17. INSTRUMENT AND CONTROLS JUNCTION BOX
18. REACTOR SUPPORT BRIDGE (MOBILE)
19. REACTOR INSTRUMENT AND CONTROL CABLES
20. DAM WITH GATE REMOVED
21. EXPANSION JOINT
22. REACTOR COOLING-WATER LINE TO HEAT EXCHANGER
23. POOL PARAPET
24. REACTOR COOLING-WATER RETURN LINE FROM HEAT EXCH.
25. FLOOR LEVEL OF BUILDING

Fig. 4.7.1. Isometric Drawing of the BSR

3. Loosen the four bolts on the swivel flange for the exit water line. (This step is not necessary if the required movement is only in the east-west direction and is less than 3 ft.)
4. Loosen the two securing bolts on each side of the bridge (use the T-handle tool located on the bridge).
5. Unlock and remove the lock on the bridge-gear controls (located at the west end of the bridge) and the lock on the carriage-gear controls (located at the east side of the carriage).
6. To move the reactor in the north-south plane, rotate the handle on the west side of the bridge as needed.
7. To move the reactor in the east-west plane, place the wheel-handle tool on the gear pin at the east side of the carriage and rotate the handle as needed.
8. As the reactor is repositioned, the count rate should be observed; and the flexible piping should be moved as needed to avoid damage to the piping.
9. After the reactor has been repositioned, attach the locks and secure the gear controls.
10. Tighten the securing bolts on both sides of the bridge.
11. Tighten the bolts on the swivel flange.

4.8. Fuel Accountability

4.8a. Introduction

The records that are maintained on fuel units (fuel elements or control-rod elements) are as follows:

1. Fuel-accountability ledger books are maintained with individual fuel-unit ledger sheets filed in sections according to unit location; i.e., core, vault, or pool. These sheets contain the past and current inventory of total uranium, ^{235}U, and ^{236}U. Each section of the ledger has a master control sheet showing the total inventory of uranium and ^{235}U in that location.
2. A fuel-inventory card file is also maintained. A card for each fuel unit shows the past and current ^{235}U inventory and is filed in sections according to location; i.e., pool or core (Example 4.8.1). These two sections are divided into subsections according to the ^{235}U inventory; e.g., all units containing 140 g of ^{235}U would comprise one subsection.
3. Tags bearing individual unit-identity numbers are kept on location-indication boards which graphically display the core, pool storage racks, etc. (see Figure 4.8.1).
4. A notebook is also maintained in the control room containing all core configurations used in the past. (The standard form is shown in Example 4.8.2.) The most recent form is to be checked for possible changes and for conformity with the identification tags on the board at poolside prior to starting up the reactor.
5. Fuel transfer memos, Example 4.8.3, are utilized whenever fuel elements are moved from one location to another in the reactor pool.

BSR **FUEL RECORD**

UCN-7453
(3 4-66)

ELEMENT NO

DATE	^{235}U	DATE	^{235}U	REMARKS

Example 4.8.1. BSR Fuel Record Card (UCN-7453)

PHOTO 93846

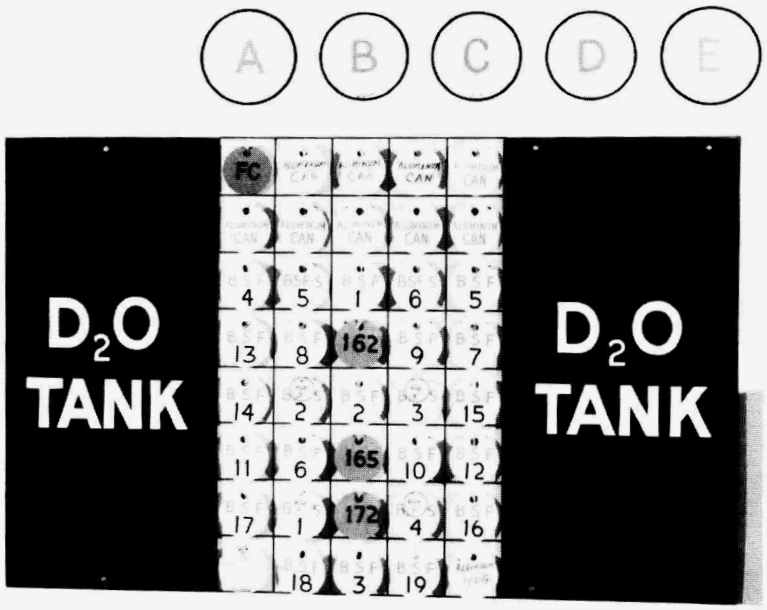

Fig. 4.8.1. BSR Core Configuration Board

Example 4.8.2. BSR Core (UCN-8504)

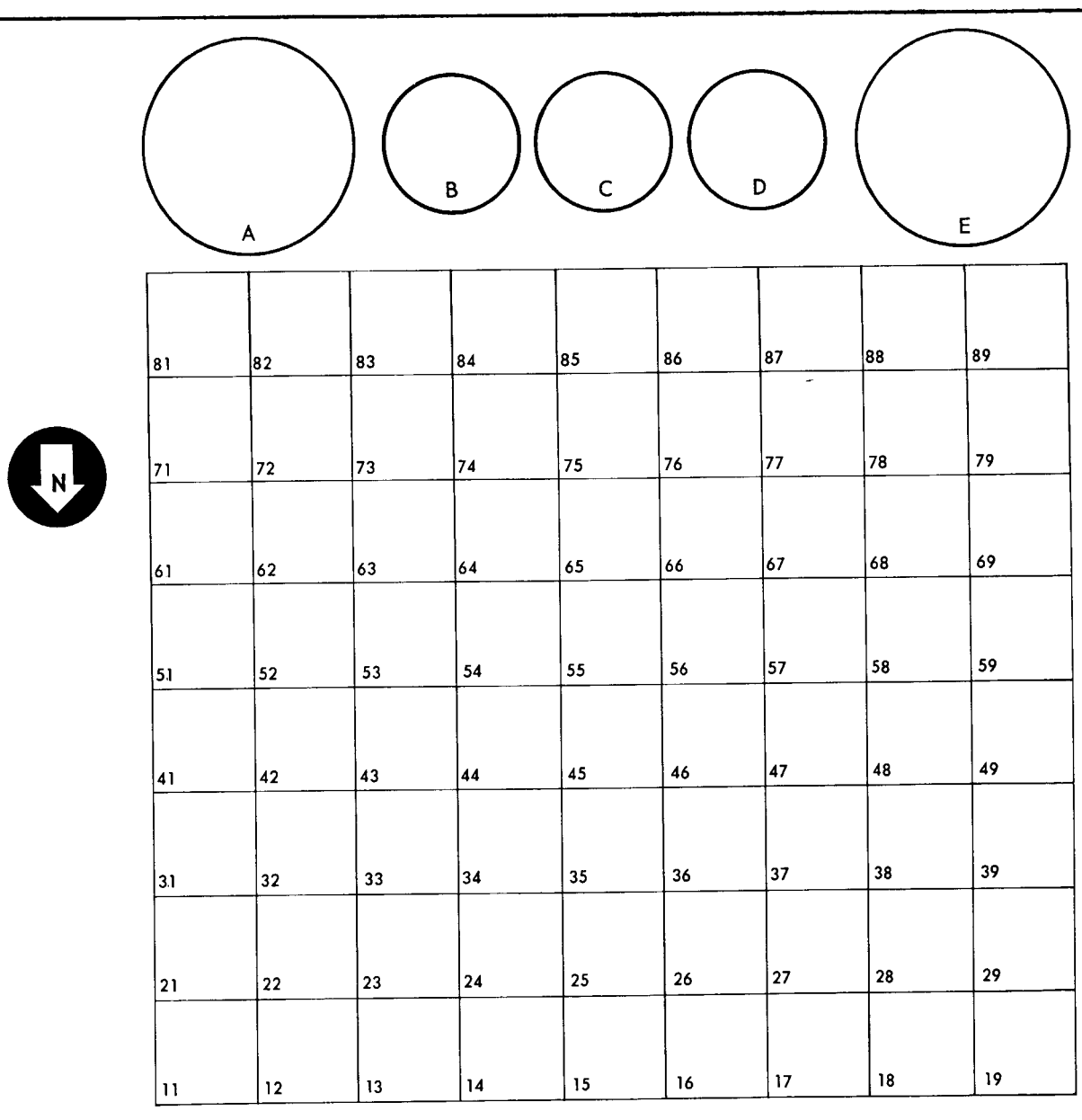

UCN-8504
(3 1-68)

BSR CORE

LOADING NO.

DATE

CRITICAL MASS

OPERATING MASS

ROD POSITIONS AT CRITICAL
(With Operating Mass)

ROD NO.	IN. WITHDRAWN
1	
2	
3	
4	
5	
6	

REMARKS:

Example 4.8.3. Transfer Memo (UCN-1909A)

TRANSFER MEMO

FROM	DATE
TO	SHIFT

SOURCE	TYPE UNITS	NO. UNITS	RECEIVER	REMARKS

UCN-1909A
(3 10-62)

4.8b. Responsibility and Procedure for Maintaining Records

Accountability records are maintained by the BSR sub-balance area representative under the supervision of the balance area representative for Code No. 20, the balance area for the Reactor Operations Department, Operations Division (the ORNL Accountability Office is Code No. 1).

Accountability records are maintained in the following manner:

1. At the end of each month the current inventory of uranium and ^{235}U are compiled and reported to the balance area representative, who, in turn, forwards this information to the ORNL Accountability Office (form UCN-3683, Example 4.8.4 is used).
2. For transfers between balance areas or sub-balance areas, form UCN 2681 (Example 4.8.5), in triplicate, is used. (An exception to this procedure is that, although the BSR pool and core are in the same sub-balance area as the BSR vault, this form is required for transfers from the vault to these other locations.)
3. For transfers within the BSR sub-balance area, form UCN-1909A (Example 4.8.3) is used. The form is filled out by the shift engineer in charge of the actual transfer and is sent to the sub-balance area representative. Information required for each unit transfer is:
   a. Source - former location of unit.
   b. Unit number - fuel-element, shim-rod, or fission-chamber identity number.
   c. Receiver - new location.
   d. Remarks - additional information as may be requested, such as condition of element, radiation level external to shipping casks, etc.

UCN-3683
(3 7-62)

UCN-3683 **4547**

SS MATERIALS INVENTORY AND CALCULATIONS SHEET FOR ( ) DEPLETED U ( ) ENRICHED U ( ) U^{233}
( ) NORMAL U ( ) THORIUM ( ) PLUTONIUM

DATE OF INVENTORY _____ 19 ___

MONTH OF _____ 19 ____

(List only one material type to a sheet)

BALANCE AREA _____ CODE NO. _____ PHONE NO. _____ DATE OF INVENTORY _____

Col. No.		1	2		3	4	5	6	7	8	9	10	11	12
		(a) Chemical or Physical Form	(b) Irradiated		(c) Net Weight (g)	(d) No. of Items	% SS to Net Weight	(e) Inventory Method	g/g or mg/ml	SS Net Weight (g)	(f) % U^{233} or U^{235}	(f) U^{233} or U^{235} Weight (g)	(f) Limits of Recognized Uncertainty	
			Y	N									SS Net	U^{233} or U^{235}
MATERIAL IN PROCESS														
MATERIAL IN RESEARCH AND DEVELOPMENT	In Active Use													
	Not In Active Use													
PRODUCT														
AWAITING RECOVERY														
TOTAL INVENTORY														
INVENTORY DIFFERENCES (Explain all gains, losses, spills, etc.)														

(a) Subdivide by chemical formula, metal slugs, etc.
(b) If irradiated check (X) in column captioned "Y," if not check "N."
(c) Show weight of solution, compound, alloy, metal, etc.
(d) Show number of pieces, number of bottles, number of assemblies, number of rigs, etc.
(e) Show method of analysis and analytical report data sheet number. When weighed, show type of scale or balance.
(f) Columns numbered 9, 10, and 12 are NOT applicable to normal uranium, thorium, or plutonium.

EXPLANATION OF DIFFERENCES: _____

1. Are all containers properly labeled as to: (a) Material type? Yes _____ No _____ (b) Drum, box, bottle, or container number? Yes _____ No _____ (c) Gross, tare, and net weights? Yes _____ No _____ (d) SS net weight and % U^{233} or U^{235}? Yes _____ No _____ (e) Analytical data expressed in g/g or mg/ml? Yes _____ No _____ (f) Date analyzed and analytical data report number? Yes _____ No _____

   If any of above are NO, explain why _____

2. Are laboratory reports and weighing data on file to support measurement data reflected in the inventory method on reverse side and also in item 1 above? Yes _____ No _____

3. Can items in inventory be traced through the records to this material balance report? Yes _____ No _____ . If NO, why? _____

4. Does each individual possessing SS materials have an itemized listing of all materials in his possession? Yes _____ No _____ . If NO, why? _____

5. Describe exact method of inventory if measurements other than analysis, weight, or volume measurements were used. Explain why more precise methods were not used _____

6. On irradiated materials which may not be amenable to measurements, are up to date records of material quantities, container or bin number and storage facility layouts available? Yes _____ No _____ . If NO, why? _____

   When will these materials be measured? _____

Inventoried by _____
(Signature Required)

Inventory Attested:

_____
(SIGNATURE OF SUPERVISOR REQUIRED)

Example 4.8.5. Source, Nuclear, and Special Materials Transfer (UCN-2681)

OAK RIDGE NATIONAL LABORATORY
SOURCE, NUCLEAR, AND SPECIAL MATERIALS TRANSFER
(Intra-Laboratory Only)

TYPE OF MATERIAL

- ☐ NORMAL URANIUM
- ☐ DEPLETED URANIUM
- ☐ ENRICHED URANIUM
- ☐ URANIUM-233
- ☐ THORIUM
- ☐ PLUTONIUM
- ☐ TRITIUM
- ☐ DEUTERIUM
- ☐ SPECIAL MATERIAL - SPECIFY -

TRANSFER NUMBER
SNM-
12118

FROM (BALANCE AREA)	CODE	TO (BALANCE AREA)	CODE
DATE		DATE	
SHIPPER'S SIGNATURE		RECEIVER'S SIGNATURE	

SHIPPER'S MEASUREMENT METHOD

RECEIVER'S MEASUREMENT METHOD

	ITEM 1	ITEM 2	ITEM 3	ITEM 4	ITEM 5	ITEM 6	FOR SS OFFICE USE
Chemical or Physical Form							Quota Number
Number of Pieces							
Batch or Lot Number							Jev Number
Container Number							
Analytical Report Number							
Analytical Results ( ) g/g or ( ) mg/ml							TOTALS
Volume in Liters							
Gross Weight of Container & Material							
Tare Weight of Container							
Net Weight of Material							
Net Weight of SS Material (g)							
Per Cent Fissile Material to SS Net							
Net Weight of U^{235} (g)							
Net Weight of U^{233} ( ) Pu ( )							
Limits of Recognized Uncertainty — SS Net							
Limits of Recognized Uncertainty — "23" or "25"							

NOTE: Shipper-receiver differences must be reported to the SS Accountability Office immediately for reconciliation.

IF MATERIAL WAS NOT MEASURED BY EITHER SHIPPER OR RECEIVER STATE WHY

OTHER PERTINENT COMMENTS

Distribution: (White) Accountability Office - (Canary) Receiver - (Pink) Shipper

UCN-2681
(3 2-61)

4.8c. Procedure for Calculating Consumption of Uranium

Normally, ^{235}U consumption by neutron absorption is not considered for small items; e.g., fission chambers, foils, etc. In fuel elements and control elements, the consumption of ^{235}U by neutron absorption is calculated due both to fission (burnup) and neutron capture (forming ^{236}U).

Following any partial or complete reloading of the reactor, the number of kwh accumulated during the preceding period of reactor operations is obtained from the BSR log book. With this information, the number of grams of ^{235}U consumed may be computed as follows:

$$\text{Grams } ^{235}U \text{ fissioned} = (\text{kwh}/24) \times 1.07 \text{ g } ^{235}U/1000 \text{ kwh-day}$$

Since the consumption of ^{238}U and ^{236}U is negligible in BSR fuel elements, the consumption of ^{235}U due to fission is equal to total loss of uranium.

Next, the fraction of the total uranium consumption (burnup) is calculated for the individual element. This fraction is called the burnup factor (BF) and is defined as:

$$BF = \frac{\text{Average flux in fuel unit}}{\text{Average flux in core}} \times \frac{^{235}U \text{ in fuel unit}}{^{235}U \text{ in core}}$$

Following this, the burnup factors are multiplied by the previously calculated burnup to determine the burnup per element during the previous operating period. The current burnup is then subtracted from the uranium content of the element at the start of the operating period to obtain the current uranium content. A new total burnup is computed by adding the current burnup to the previous total burnups.

To calculate the current production of ^{236}U, the current burnup is used in the following formula:

$$\text{Grams } ^{236}U \text{ produced} = (0.183 \text{ g } ^{236}U/\text{g burnup}) \times \text{grams burnup}$$

The number thus obtained plus the current burnup is subtracted from the ^{235}U content of the element at the start of the operating period to obtain the current ^{235}U content. To obtain the new total ^{236}U production, the new total burnup is used in the above equation.

The current burnup, new total burnup, uranium content, ^{235}U content, and ^{236}U production are recorded in the ledger book.

It should be noted that numerous checks must be made by the subbalance area representative to prevent cumulative-type errors.

5. EXPERIMENTS

5.1. Introduction

Although the BSR was originally built to study radiation shielding, its high degree of accessibility makes it ideal for performance of a wide choice of experiments. The experiment facilities currently in use are described briefly in the following sections. The shift engineers and operators should become familiar with the services required by each experiment.

5.2. Experiment Facilities

5.2a. Thermal-Neutron-Irradiation Facility (East D_2O Tank)

1. References

   a. Drawings. - SDD-D-1427a, High Thermal Neutron Flux Facility - Bulk Shielding Reactor - Building 3010

   b. Reports. - C. E. Klabunde and B. C. Kelley, "Irradiation Facilities in the Oak Ridge National Laboratory Bulk Shielding Reactor", International Symposium on Developments in Irradiation Capsule Technology, Held at Pleasonton, California, May 3-5, 1966, TID-4500 (Conf-660511), paper 8.7 (March, 1967).

2. Purpose. - The purpose of this facility is to provide readily available space for irradiating material in a well-thermalized neutron flux.

3. Brief Description. - Figure 5.2.1 shows the facility as installed on the east side of the BSR. Figure 5.2.2 illustrates the important dimensions of the facility. The lower end of the central tube is surrounded by a thin-walled aluminum container filled with bismuth. (The bismuth was intended to shield the central tube from gamma rays; however, as shown in Table 5.2.1, the gamma-ray dose rate in this tube is relatively large. This dose rate is primarily due to thermal-neutron capture gamma rays which are produced in the walls of the aluminum sample tube.) Not illustrated in Figure 5.2.2 are flanged joints on each tube which are 9 ft 4 in. above the reactor centerline. These joints allow the upper portion of the tubes to be modified without

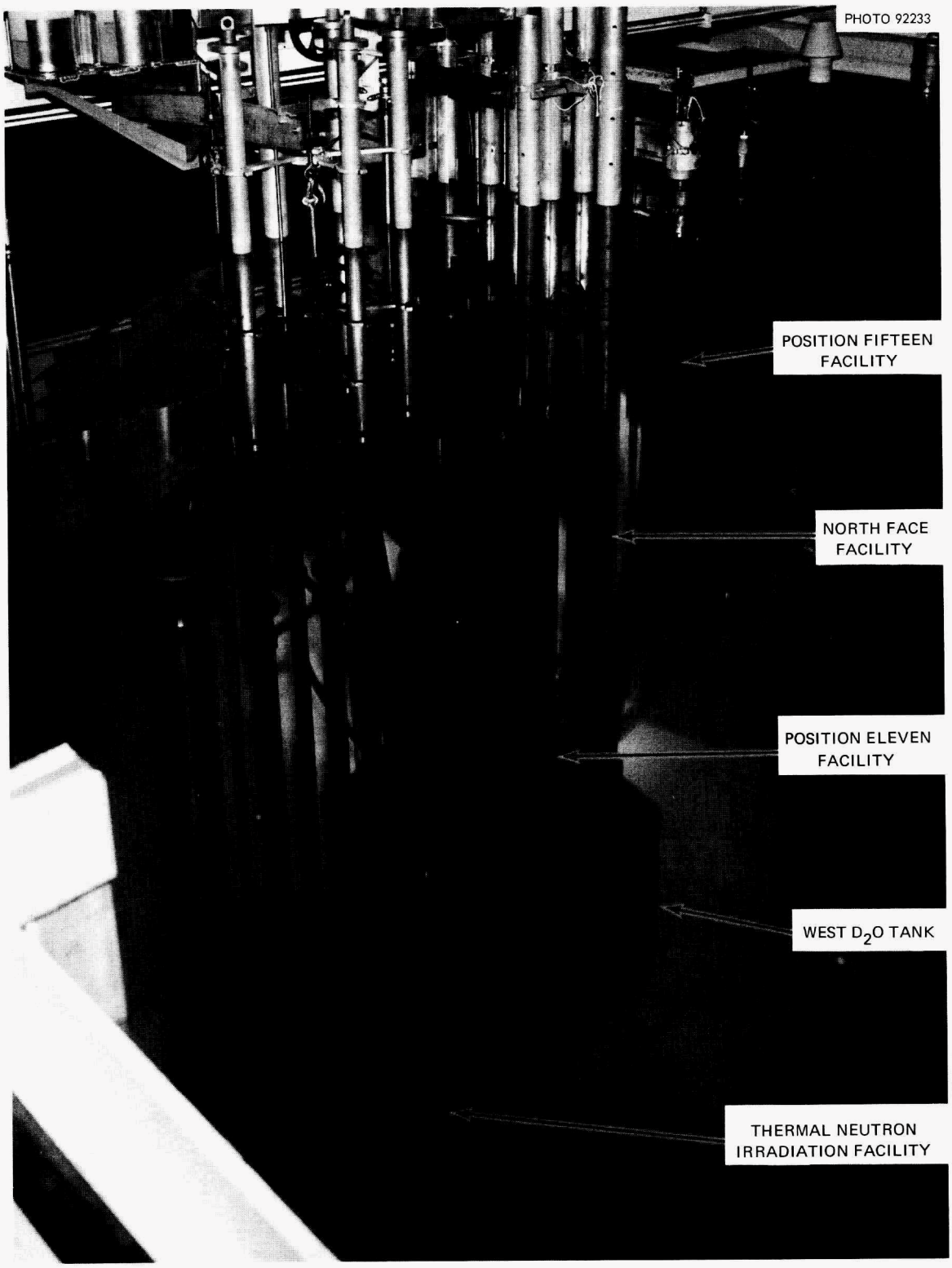

Fig. 5.2.1. Thermal Neutron Irradiation Facility

ORNL-DWG 66-3761

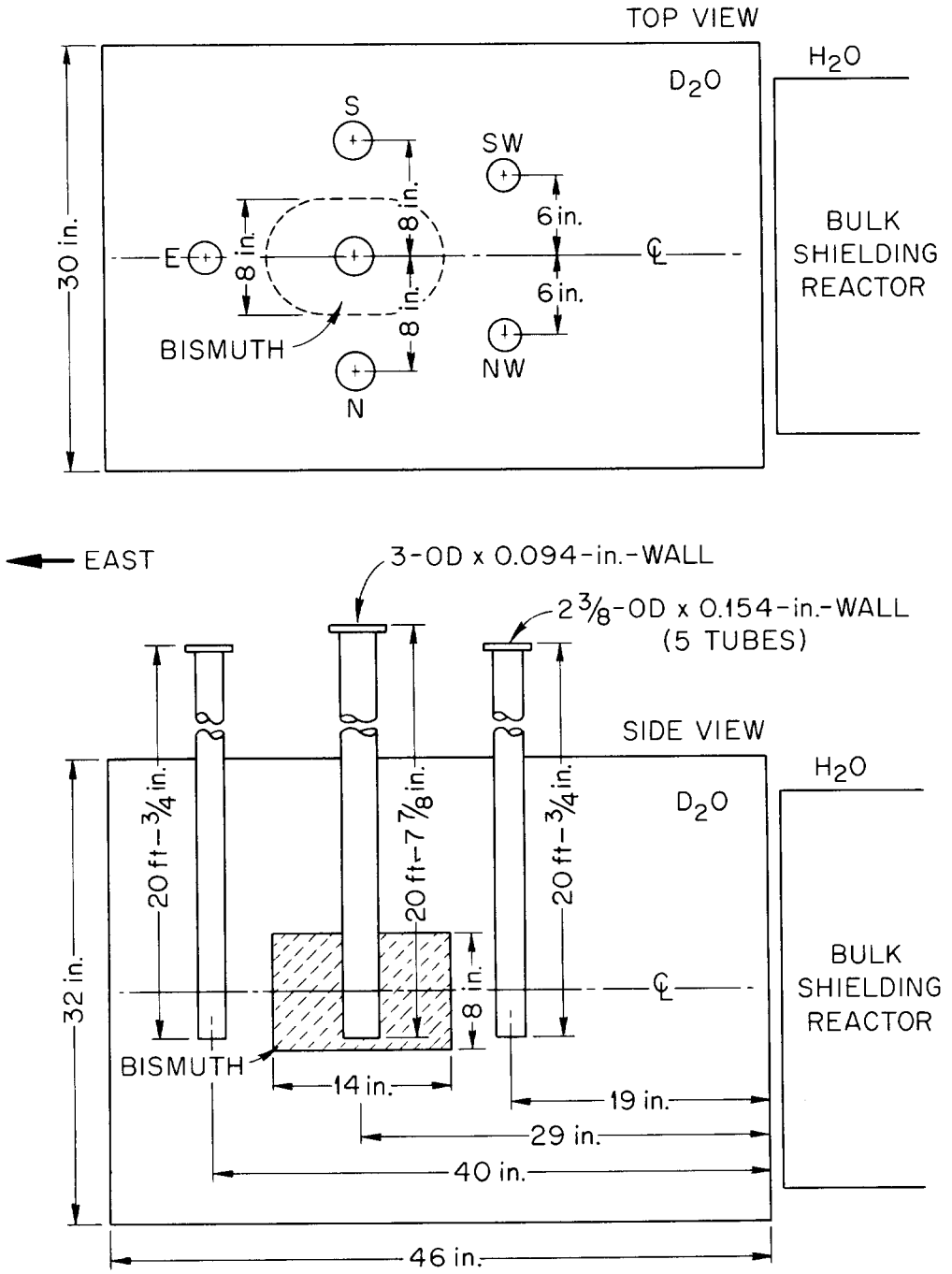

Fig. 5.2.2. Thermal Neutron Irradiation Facility

Table 5.2.1. Neutron-Flux and Gamma Data
Measured in Certain BSR Irradiation Facilities at 2 Mw

Facility or Sample Tube Position	Fast Neutron Flux* (n/cm^2 sec)	Thermal Neutron Flux (n/cm^2 sec)	Cadmium Ratio (Gold)	Gamma (r/hr)	Gamma Heat (watts/g)
Liquid Helium Cryostat	9.4×10^8 (S)	2.7×10^{12}	91		0.015
Liquid Nitrogen Cryostat	1.3×10^{12} (N)	1.1×10^{13}			
Core-Position-15 Tube	1.7×10^{12} (N)	1.3×10^{13}			0.2
	Thermal Neutron Irradiation Facility (D_2O Tank)				
East	0.5×10^7 (S)	0.4×10^{12}	9.9×10^2	1.5×10^5	
Centerline	9.6×10^7	1.9×10^{12}	8.5×10^2	2.8×10^5	
North, South	7.0×10^7	1.5×10^{12}	1.7×10^3	7.3×10^5	
Northwest, Southwest	1.4×10^9	5.5×10^{12}	2.0×10^2	2.7×10^6	

*Fast neutron detectors - (S) = Sulfur and (N) = Nickel

having either to drain the reactor pool completely or to remove the tank from the pool; the upper portions of the center, north, and south tubes are offset from the centerline of the bottom portion of the tube to eliminate a direct radiation beam from the reactor.

The six aluminum walls of the tank are 1/2 in. thick. In addition, the east and west walls are reinforced with aluminum plates 3/4 in. thick, 30 in. high, and 22 in. wide. The tank is positioned by two footpieces on its west end which fit into a bracket fastened to the east edge of the reactor grid plate; the tank is supported by four steel cables which are fastened to a rolling support mechanism which is, in turn, supported by the reactor bridge. The support mechanism is attached to the reactor carriage, and movement of the latter will cause an equal movement of the former; thus, the tank is repositioned with the reactor.

The west wall of the tank is about 1/4 in. east of the nearest edges of the reactor fuel elements. Reactivity measurements indicate that complete removal of the tank would cause a change in reactivity of -0.82% $\Delta k/k$.

4. Routine Checks. - A 1/2-in. aluminum tube extends from the top of the tank between the central sample tube and the east sample tube to above the pool water surface. A plastic tube attached to this 1/2-in. tube enters the top and extends to the bottom of a heavy-walled polyethelene bottle which contains D_2O. This polyethelene bottle, which provides an expansion volume for the tank, is located just east of the east working platform.

Once per shift the level in the bottle will be visually checked to determine that it is neither too low nor too high.

5. Instrumentation. - Although instrumented samples may at times be installed in this facility, no instrumentation is associated with the facility itself.

6. Installation and Removal Procedures. - This facility is intended to be a permanently installed feature of the reactor. Installation or removal of this facility constitutes a major operation and causes a significant change in reactivity; therefore, a special procedure would have to be written. This procedure would require review and approval as described in Section 4.5.

5.2b. West D_2O Tank

1. References

a. Drawings

(1) M 20310 EJ 009, Low Temperature Experiment - D_2O Box

(2) M 20310 EJ 010, Low Temperature Experiment - D_2O Box - Detail Sheet 1

(3) M 20310 EJ 011, Low Temperature Experiment - D_2O Box - Detail Sheet 2

(4) M 20310 EJ 012, Low Temperature Experiment - D_2O Box - Detail Sheet 3

(5) M 20310 EJ 013, Low Temperature Experiment - D_2O Box - Detail Sheet 4

b. Reports. - C. E. Klabunde and B. C. Kelley, "Irradiation Facility in the Oak Ridge National Laboratory Bulk Shielding Reactor", International Symposium on Developments in

Irradiation Capsule Technology, Held at Pleasonton, California, May 3-5, 1966, TID-4500 (Conf-660511), paper 8.7 (March, 1967).

2. Purpose. - The purpose of this facility is to provide a thermalized neutron current at the west face of this tank. Although the tank was originally designed and installed for use in conjunction with the liquid helium cryostat, it is available for use with other experiment facilities.

3. Brief Description. - Figure 5.2.1 shows the facility as installed on the reactor grid plate; the facility occupies the 32 westernmost grid positions. The tank is 25 in. wide and 11 15/16 in. deep. The height of the tank varies from 20 1/4 in. at the southeast corner to 28 1/4 in. at the northwest corner. Five of the six aluminum walls of the tank are 3/8 in. thick; the west wall is 5/16 in. thick. Therefore, the tank interposes a 11 3/8-in. slab of D_2O between the reactor core and any associated experiment located adjacent to the west wall of the tank.

The base plate is equipped with two footpieces which are almost identical to fuel element end boxes; these footpieces position the base plate in the reactor grid plate. In addition, the base plate contains holes which line up with the dowel pin associated with each reactor grid-plate position. Between the base plate and the tank is a slide-plate with sliding ways and a screw adjustment. This arrangement allows the tank position to be adjusted in the east-west direction

using a special tool. This adjustment will allow the water gap (between the tank and the edges of the concave sides of the adjacent fuel elements) to be changed over a range from essentially zero to 1.135 in. Changing the water gap changes the cadmium ratio of the neutron current which emerges from the west wall of the tank. Reactivity measurements indicate that with the tank initially closest to the core complete removal would cause a change of -1.85% $\Delta k/k$; with the tank initially at midposition, complete removal would cause a change of -0.96% $\Delta k/k$; and, with the tank initially at the farthest position, complete removal would result in a change of -0.47% $\Delta k/k$. Movement of this tank relative to the reactor core is not permitted during reactor operation.

4. Routine Checks. - A 1/2-in. schedule-40, aluminum pipe extends from the southeast corner of the top of the tank to above the pool water surface. A plastic tube attached to this 1/2-in. pipe enters the top and extends to the bottom of a heavy-walled polyethelene bottle which contains D_2O. This polyethelene bottle, which provides an expansion volume for the tank, is located just east of the east working platform.

   Once per shift the level in the bottle will be visually checked to determine that it is neither too low nor too low.

5. Instrumentation. - No instrumentation is associated with this facility.

6. Installation and Removal Procedures. - This facility is intended to be a permanently installed feature of the reactor. Installation or removal of the facility constitutes a major operation

and causes a significant change in reactivity; therefore, a special procedure would have to be written. This procedure would require review and approval as described in Section 4.5.

5.2c. Liquid-Helium Cryostat

1. References

a. Drawings

(1) Q-2853-1, Low Temperature Irradiation Facility Joule-Thomson Valve Safety - Front and Rear of Panelboard and Location

(2) Q-2853-2, Low Temperature Irradiation Facility Joule-Thomson Valve Safety - Panel Layout, Cutout and Detail

(3) Q-2853-3, Low Temperature Irradiation Facility Joule-Thomson Valve Safety - Electrical Schematic and Wiring Diagrams

b. Reports. - C. E. Klabunde and B. C. Kelley, "Irradiation Facility in the Oak Ridge National Laboratory Bulk Shielding Reactor", International Symposium on Developments in Irradiation Capsule Technology, Held at Pleasonton, California, May 3-5, 1966, TID-4500 (Conf-660511), paper 8.7 (March, 1967).

2. Purpose. - The purpose of this facility is to provide the capability for irradiating material in a well-thermalized neutron flux at liquid helium temperature. (Liquid helium temperatures are necessary to immobilize crystal lattice imperfections [damage] induced in pure metals by reactor irradiation. Reactor fluxes induce damage in metals not only by fast neutron

collisions, but also by recoils from the [n, γ] reaction upon capture of thermal neutrons. Since the latter mechanism produces a relatively simple damage configuration, it can be a valuable basic research tool if properly isolated from fast neutron damage.)

3. Description. - The in-pool portion of this facility is located in the southwest corner of the reactor pool. Figure 5.2.3 depicts this facility with the reactor positioned against it as viewed from the south. The sample chamber is a 1-in.-diam, 8-in.-long section at the bottom of an 18-ft tube. The chamber walls are cooled by the liquid helium circulating in a closed-cycle refrigerator system. The sample chamber and associated refrigerant-transfer lines and vacuum jacketing are housed in a 6-in.-diam pipe which is surrounded by a heavy-water-filled tank at the elevation of the reactor core. (For a description of the out-of-pool portion of this facility, see the referenced report.)

   Reactivity measurements indicate that moving the reactor so that the west D_2O tank is against this facility has no measurable effect. Table 5.2.1 shows the neutron-flux and gamma-ray data obtained in this facility.

4. Routine Checks. - Reactor Operations Department personnel have not been requested to make routine checks of this facility except for the shift walk-through checks.

5. Instrumentation. - Although the liquid-helium cryostat facility has elaborate instrumentation (primarily temperature-monitoring

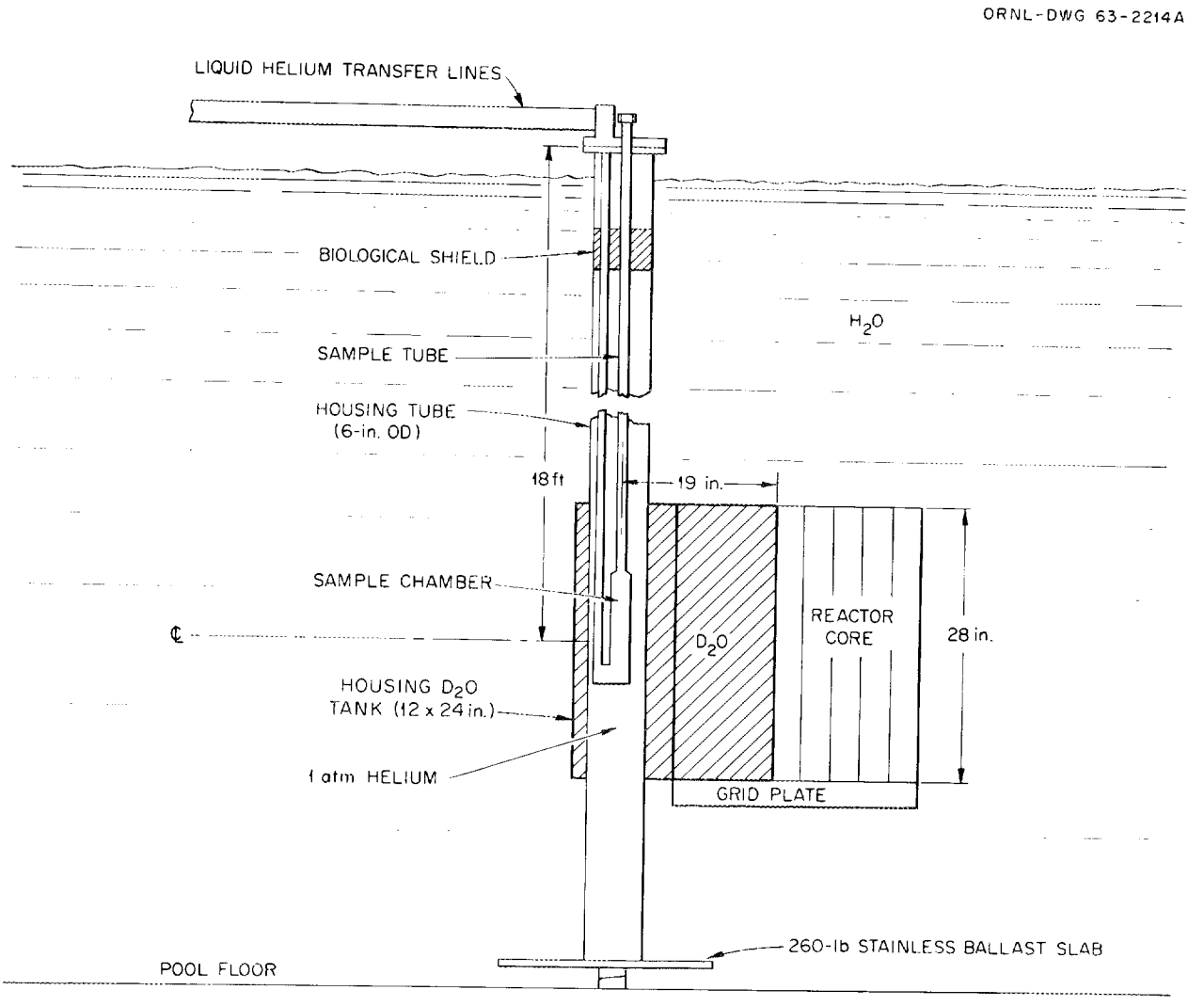

Fig. 5.2.3. The Liquid Helium Cryostat

instrumentation), only two instrumentation systems are of concern to the Reactor Operations Department personnel. These systems are the boron thermopile, which is inserted in one of the tank-access tubes and which monitors the thermal neutron flux of neutrons with energies >0.1 Mev, and the Joule-Thomson (J.T.) valve temperature monitor, which uses carbon-resistance thermometers to measure the temperature of the liquid helium just upstream from the Joule-Thomson flow-control valve. (This valve controls the flow of liquid helium through the coils surrounding the walls of the sample chamber.)

The boron thermocouple is of concern since it is an accurate indicator of neutron flux leakage to the facility. This parameter is an indicator of reactor power level and, in particular, determines the length of an irradiation at a desired exposure rate.

The J.T. valve temperature is of primary concern since this parameter is used to initiate action by the reactor control (or protection) system. If the E-panel switch (switch No. 1) is in the NORMAL position, the J.T. temperature-monitoring instrumentation will initiate an alarm if the temperature increases to 3.9°K (-269.25°C) and will initiate a setback if the temperature increases to 4.5°K (-268.65°C). In this case, the E-panel switch tie-in is provided for the protection of experiment data; therefore, the switch for this experiment is usually placed in the NORMAL position during reactor operation only at the request of the experimenter and only during periods when the experiment is not attended.

This situation is unusual when compared with experiments installed in other reactors operated by the Reactor Operations Department. More unusual, however, is the fact that if the reactor is not being operated for some other experiment and even if the reactor is not positioned against the liquid helium cryostat the E-panel switch may be left in the NORMAL position. This situation may occur during the postirradiation period when continued low-temperature exposure of the sample is required. Normally, during this period, the Laboratory Patrol, which is a function of the Laboratory Facilities Department of the Operations Division, checks the experiment laboratory every four hours and monitors certain alarms from the laboratory. These alarms may be relayed to the Waste Monitoring Control Center, Building 3105, by operation of a switch in the experiment laboratory.

6. Installation and Removal Procedures. - When it is not desirable to expose to irradiation either this facility or a sample rig in this facility, the reactor is moved sufficiently far from the facility (3 ft) so that the reactor may be operated at full power without exposing the facility to a significant neutron flux or gamma-ray dose rate. Therefore, removal of this facility or of a sample rig from this facility is governed by the usual rules for removal of radioactive materials from the reactor pool.

Installation procedures involve decreasing the relative distance between the reactor and the facility. Positioning

the reactor against the facility primarily involves following Section 4.7. After the final north-south repositioning of the reactor bridge and after the semifinal east-to-west positioning of the reactor bridge, this reactor carriage is moved west until the west D_2O tank is in close contact with the facility. Then the compression between the facility and the tank is allowed to determine the final position of the reactor carriage; i.e., the carriage is allowed to move eastward slightly.

The removal procedure consists of moving the reactor carriage until the facility and the west D_2O tank are separated by a minimum of 3 ft (see Section 4.7).

Since the reactor carriage must be moved to change the relative position of the reactor and the facility, such changes are prohibited when the reactor is operating even though no reactivity effects result.

5.2d. Core-Position Fifteen Facility*

1. References

a. Drawings

(1) M 10258 EL 010, Access Equipment - Grid 5 - BSR Assembly

(2) M 10258 EL 011, Access Equipment - Grid 5 - BSR Assembly Detail Sheet No. 1

*This facility was formerly referred to as the position five facility. The change in name resulted from the change in the reactor grid plate and in the reactor grid-plate numbering system which occurred during the modification for 2-Mw operation. The relative position of the facility tube, with respect to the west D_2O tank and to the core, was unchanged from that in the 1-Mw reactor.

(3) M 10258 EL 012, Access Equipment - Grid 5 - BSR Assembly Detail Sheet No. 2

(4) M 10258 EL 013, Access Equipment - Grid 5 - BSR Assembly Detail Sheet No. 3

(5) M 10258 EL 014, Access Equipment - Grid 5 - BSR Assembly Detail Sheet No. 4

(6) M 10258 EL 015, Access Equipment - Grid 5 - BSR Assembly Detail Sheet No. 5

(7) M 10258 EL 016, Access Equipment - Grid 5 - BSR Assembly Detail Sheet No. 6

(8) M 10258 EL 017, (This drawing has been deleted)

(9) M 10258 EL 118, Access Equipment - Grid 5 - BSR Assembly Detail Sheet No. 8

(10) M 10258 EL 119, Access Equipment - Grid 5 - BSR Assembly Detail Sheet No. 9

(11) M 10258 EL 120, Access Equipment - Grid 5 - BSR Assembly Detail Sheet No. 10

b. Reports. - C. E. Klabunde and B. C. Kelley, "Irradiation Facility in the Oak Ridge National Laboratory Bulk Shielding Reactor", International Symposium on Developments in Irradiation Capsule Technology, Held at Pleasonton, California, May 3-5, 1966, TID-4500 (Conf-660511), paper 8.7 (March, 1967).

2. Purpose. - The purpose of the position fifteen facility (PFF) is to provide space for radiation-damage experiments during, or for postirradiation experiments following, exposure to reactor-spectrum neutron-flux and gamma-ray irradiations.

3. Brief Description. - As depicted in Figure 5.2.4, the facility is located at the northwest corner of the reactor core. It consists of a curved access tube, 4 in. in outer diameter, which is welded to a hollow core piece having the same outer dimensions as a BSR fuel element. The top of the tube is sealed with a plug which has incorporated in it a port for pressurizing the system and several electrical feed-throughs. There is a neutron and gamma shield plug suspended from the seal plug. A side arm is also provided for evacuating the system. A lead ballast, sheathed in aluminum, surrounds the tube near the bottom end to compensate for buoyancy. As can be seen in Figure 5.2.1, the the top of the tube extends above the surface of the water. A large transfer cask has been constructed that may be lowered around the top of the tube and into which the irradiated assemblies may be removed.

   Reactivity measurements indicate that complete removal of the facility tube would result in a change of -0.13% $\Delta k/k$. Table 5.2.1 shows the neutron-flux and gamma-ray data measured in this facility.

4. Routine Checks. - Reactor Operations Department personnel have not been requested to make routine checks of this facility except for the shift walk-through checks.

5. Instrumentation. - Although instrumented samples or experiments may at times be installed in this facility, no instrumentation is required for the facility in the absence of an experiment.

6. Installation and Removal Procedures. - Removal requires physical removal of the facility from CP-15 and replacement with a

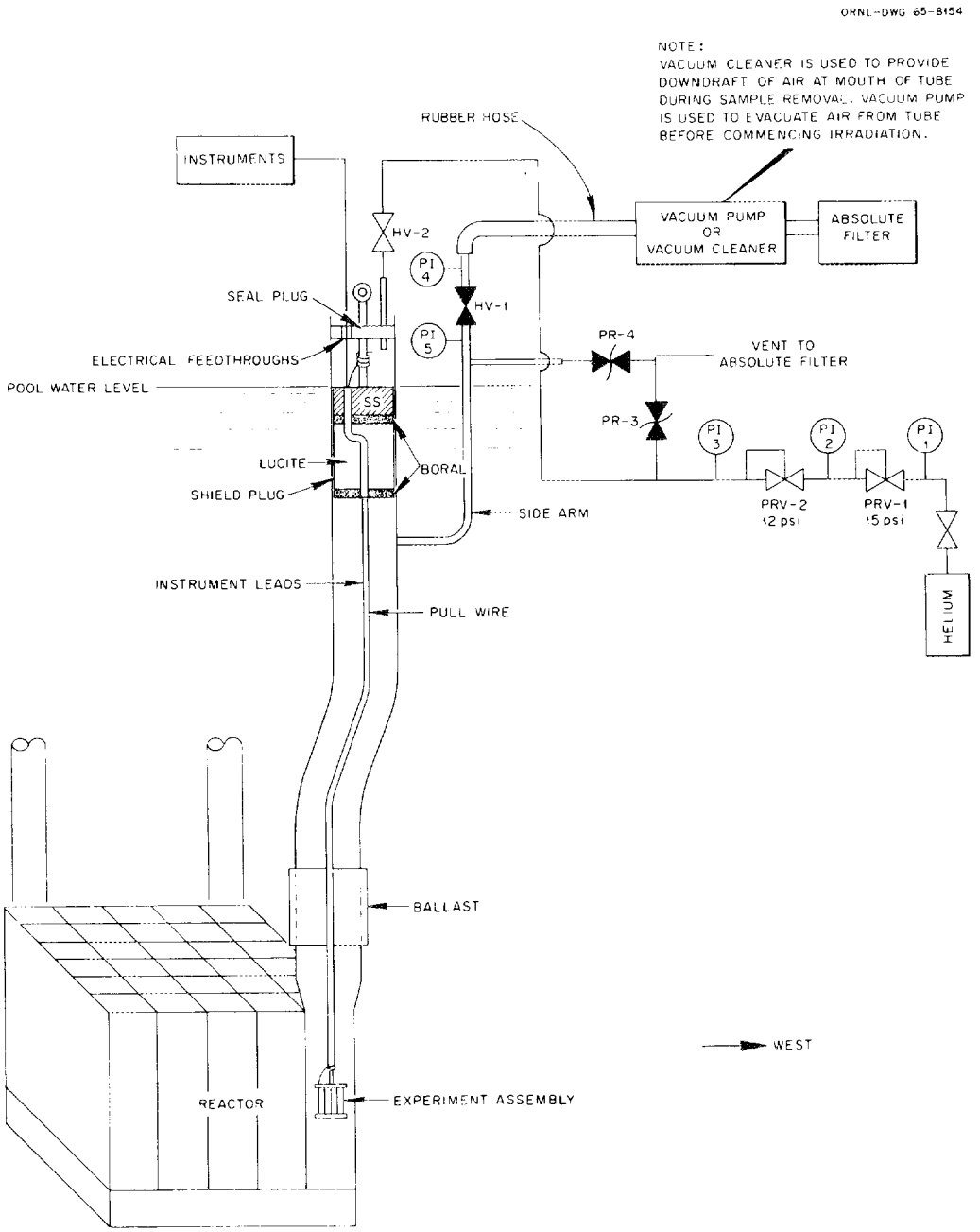

Fig. 5.2.4. Schematic Drawing of the Position Fifteen Facility

reactor grid-plate plug; installation requires removal of a reactor grid-plate plug and replacement with a CP-15 facility tube. Therefore, such changes require reactor shutdown but no reactor cooling-flow shutdown. Facility tubes which are empty or facility tubes containing exposed samples are stored attached to the poolside storage mechanisms or to the instrument bridge. (Generally, samples are placed in the facility before installation of the facility in the reactor and samples remain in the facility after the facility is removed from the reactor to allow time for radioactive decay.)

During irradiation, the facility is pressurized with helium gas using the arrangement shown in Figure 5.2.4.

5.2e. Liquid-Nitrogen Cryostat

1. References

a. Drawings

(1) SSD D 1468 1, Assembly

(2) SSD D 1468 2, Details

(3) SSD D 1468 3, Tube Flanges and Base Details

(4) SSD C 1468 4, Sample Chamber Assembly and Details

(5) SSD D 1468 5, Instrument Bridge Hanger

(6) SSD D 1468 6, Throttle Valve

(7) SSD D 1468 7, Throttle Valve Details

(8) SSD C 1468 8, Flange Details

(9) SSD A 1468 9, Spacers

(10) SSD A 1468 10, Thermocouple Flange

(11) SSD A 1468 11, Space Requirement

(12) SSD A 1468 12, Compressor and Control System

(13) SSD A 1468 13, Plan and Side View to BSR

(14) SSD D 1468 14, Secured to BSR

(15) SSD C 1468 15, BSR Grid Support

(16) SSD C 1468 16, Wedge, Straps, and Alignment Pins - Details

(17) SSD A 1468 17, Shielding

(18) SSD D 1468 18, Pictorial Schematic

(19) SSD C 1468 19, Remote Throttle-Valve Control

b. Reports. - C. E. Klabunde and B. C. Kelley, "Irradiation Facility in the Oak Ridge National Laboratory Bulk Shielding Reactor", International Symposium on Developments in Irradiation Capsule Technology, Held at Pleasonton, California, May 3-5, 1966, TID-4500 (Conf-660511), paper 8.7 (March, 1967).

2. Purpose. - The purpose of this facility is to provide space to conduct radiation-damage experiments in reactor-spectrum environments at temperatures well below normal ambient temperatures. This capability is provided by a cryostat which is cooled by helium gas. The gas is precooled by liquid nitrogen. On occasions, a combination of electric heaters and the facilities' cooling equipment are used to irradiate samples at temperatures such as +50°C.

3. Brief Description. - The cryostat is mounted on the instrument bridge such that it may be moved to almost any spot in the reactor pool. (Figure 5.2.5 shows a schematic layout of the

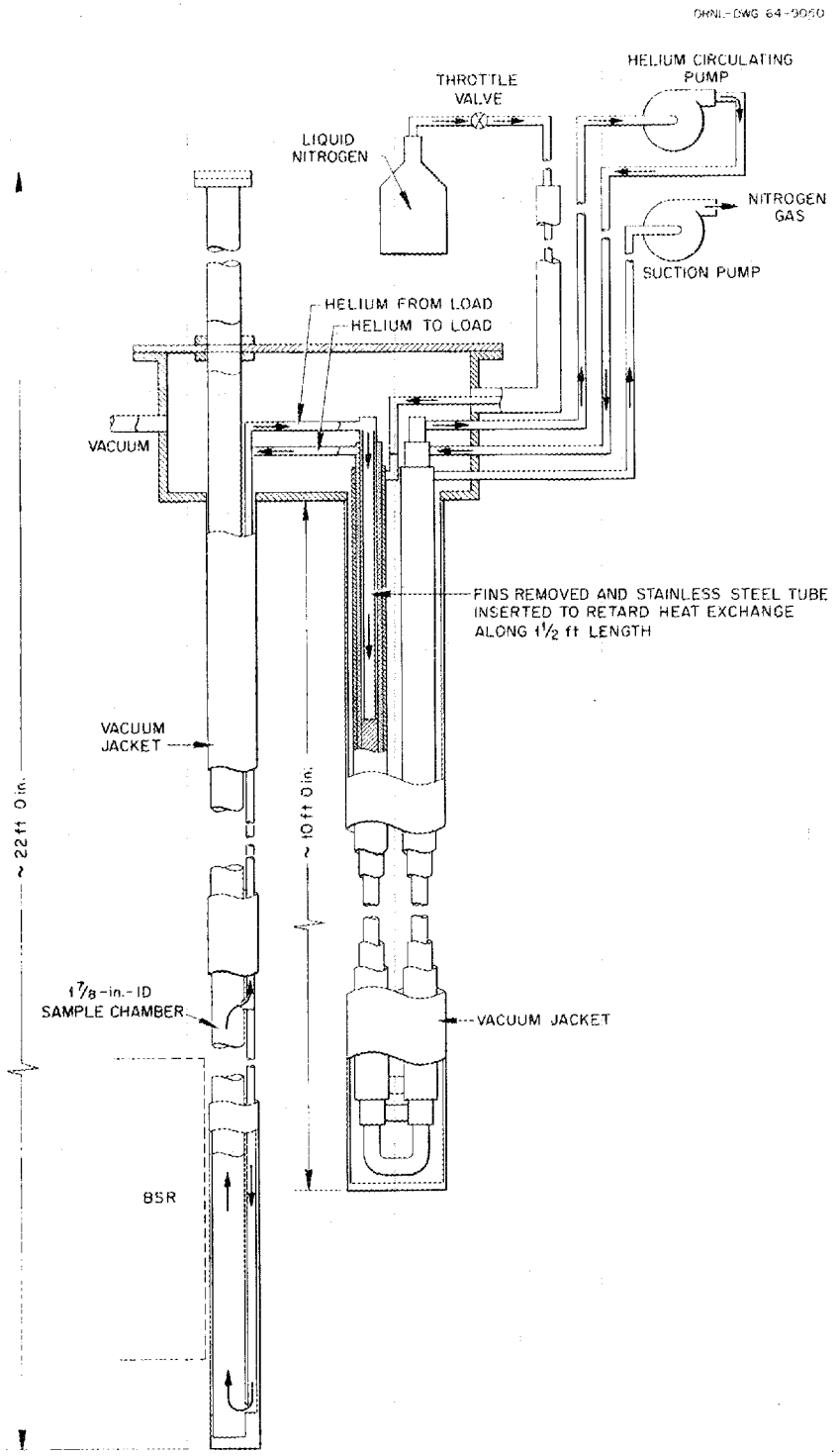

Fig. 5.2.5. The Liquid Nitrogen Cryostat

cryostat.) Helium gas pumped through a liquid-nitrogen-cooled counter-flow heat exchanger enters the bottom of the sample chamber and flows upward, cooling the chamber. The gas then returns to the heat exchanger and flows through the inner annulus, helping to cool the helium which is enroute to the chamber. Next the helium gas flows to the helium pump where the cycle begins again. The cold regions are insulated by a vacuum jacket surrounding the assembly.

In the configuration shown in Figure 5.2.5, the samples are irradiated while in the helium flow. This arrangement somewhat complicates removal of samples while they are cold and requires a new helium change each time a sample is removed. Since most irradiations will require cold removal of samples, a sample tube 1 1/8-in. OD by 20 ft long is inserted in the 1 7/8-in.-OD chamber. Once a sample is inserted in the inner chamber, the chamber is evacuated and back-filled with helium gas for heat transfer.

When the irradiation is completed, the helium is pumped out and the chamber back-filled with nitrogen gas which is then liquified, facilitating cold-sample removal. (For more details, see the referenced report.)

Reactivity measurements indicate that the complete removal of the facility tube would result in a change of -0.18% $\Delta k/k$. (Table 5.2.1 shows the neutron-flux and gamma-ray data measured in this facility.

4. Routine Checks. - Reactor Operations Department personnel have not been requested to make routine checks of this facility except for the shift walk-through checks.

5. Instrumentation. - Although the liquid-nitrogen cryostat facility has elaborate instrumentation, checks of this instrumentation are made only on special request.

6. Installation and Removal Procedures. - This facility is attached to the reactor by a bracket into which fit footpieces that orient the facility on the centerline of the reactor. When installed, the facility is positioned on the north face of the reactor.

When it is not desirable to expose either this facility or sample rigs in this facility to irradiation, the reactor-to-facility distance is increased sufficiently to allow full-power operation of the reactor without exposing the facility to a significant neutron flux or gamma-ray dose rate. Therefore, once separated from the reactor, removal of this facility or of a sample rig from this facility, is governed by the usual rules for removal of radioactive materials from the reactor pool.

The installation procedure involves decreasing the relative position of the reactor and the facility. Positioning the reactor relative to the facility primarily involves following Section 4.7. After final relative east-west repositioning of the reactor carriage, with respect to the instrument bridge, and after semifinal relative north-south repositioning of the reactor bridge, with respect to the instrument bridge, the final

adjustments should be made. The lifting eye on top of the front-face aluminum wedge should be engaged and the wedge raised. After the final north-south movement has been completed, the wedge can be lowered so that its footpieces can engage the holes in the bracket attached to the north face of the reactor grid plate. (This wedge, which displaces water, is essentially transparent to fast neutrons and allows the sample chamber to be exposed to a reactor neutron spectrum rather than the more thermalized spectrum that would otherwise be present.)

The removal procedure is essentially the reverse of the installation procedure. The reactor and the facility should be separated a minimum of 3 ft following the irradiation.

5.2f. North-Face Facility

1. References

a. Drawings. - Figure 5.2.6.

b. Reports. - None.

2. Purpose. - The purpose of this facility is to provide readily available space for irradiating relatively large capsules on the north face of the reactor. In addition, this facility maintains the capsules at a constant and reproducible position.

3. Brief Description. - This facility is a 3 1/2-in.-OD aluminum tube with 0.0625-in.-thick walls. The tube, when installed, extends from the elevation of the reactor grid plate to above the pool water surface (See Figure 5.2.6). At the bottom of this tube is a base plate with footpieces which fit into the holes in the bracket attached to the north side of the reactor

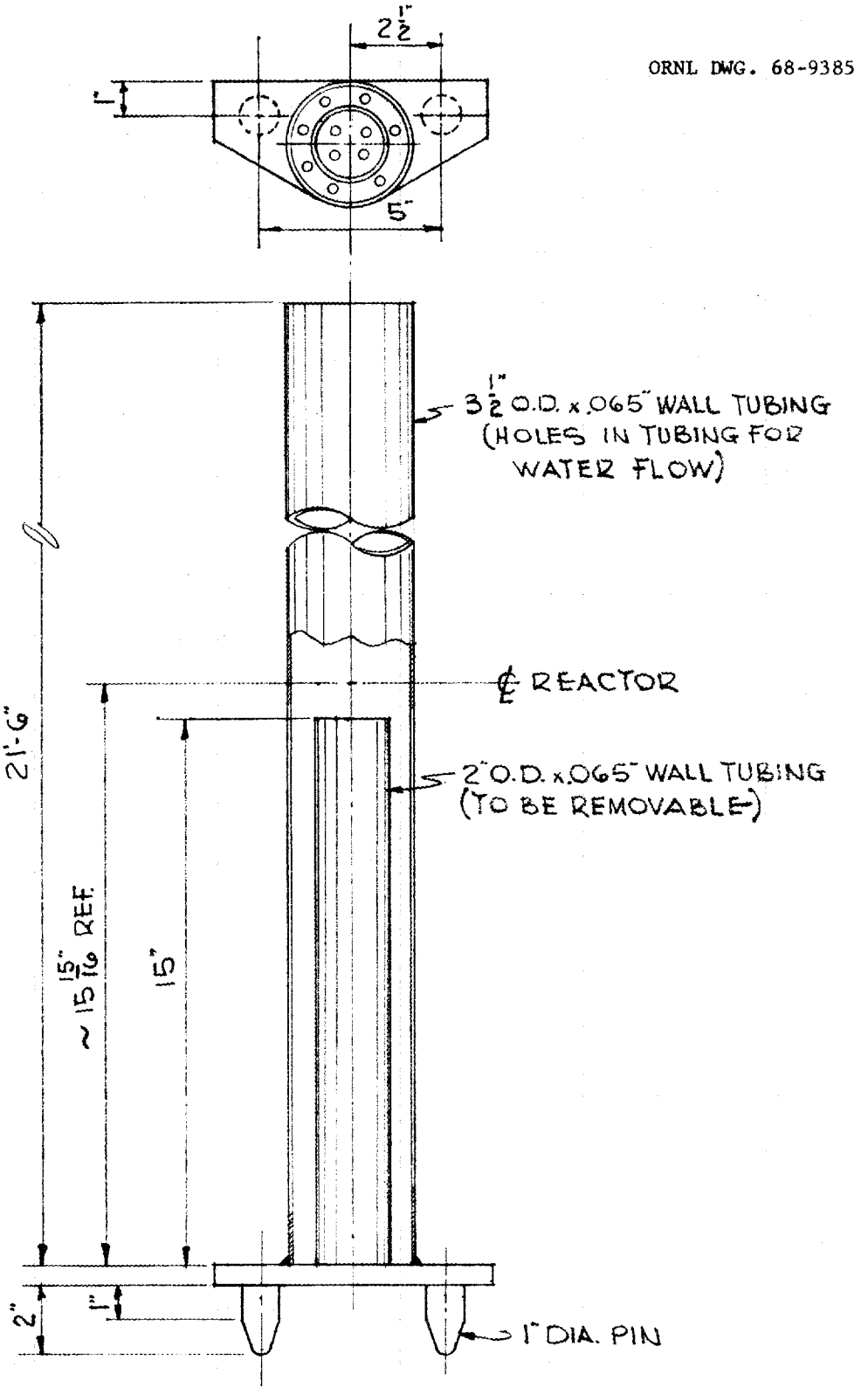

Fig. 5.2.6. North Face Irradiation Facility

grid plate. Three rows of 1/2-in.-diam holes (on 6-in. centers along the entire length of this tube) allow cooling by natural convection of the pool water. When installed at the north face of the reactor, an arm attached to the top of the tube is clamped to one of the hold-down arms.

4. Routine Checks. - Routine checks of this facility are not required except for the shift walk-through checks during periods when the facility is installed against the reactor.

5. Instrumentation. - No instrumentation is associated with this facility.

6. Installation and Removal Procedures. - When the facility is to be installed, it is lifted by hand from its poolside storage position by an operator standing on the instrument bridge. The instrument bridge should be moved south until the footpieces can be inserted in the reactor-grid-plate bracket. The arm at the top of the tube can then be clamped to one of the hold-down arms.

The removal procedure for the facility is essentially the reverse of the installation procedure.

5.2g. Core-Position-11 Facility

1. References

a. Drawings. - None.

b. Reports. - None.

2. Purpose. - Core position 11 normally contains only a grid-plate plug. A simple irradiation facility was constructed which could be installed in this core position. When installed, this facility does not prevent installation or use of any of the more

commonly used facilities; therefore, it is convenient for irradiation of low priority samples requiring relatively long exposure times.

3. Brief Description. - This facility is a 3-in.-OD aluminum tube with 0.0625-in.-thick walls. The tube, when installed, extends from the elevation of the reactor grid plate to above the pool water surface. A spare grid-plate plug is welded to the bottom of the tube and serves as a footpiece; four rows of 1/2-in.-diam holes (on 7-in. centers along the entire 21-ft length of the tube) allow cooling by natural convection of the pool water. (The length given is from the top of the tube to the top of the footpiece.) When installed in the reactor, an arm attached to the top of the tube is clamped to the support arm to which the fission chamber is fastened.

4. Routine Checks. - Routine checks of this facility are not required except for the shift walk-through checks during periods when this facility is installed against the reactor.

5. Instrumentation. - No instrumentation is associated with this facility.

6. Installation and Removal Procedures. - Before installation of this facility, the grid-plate plug should be removed from CP-11 and stored on the pool floor. The facility should then be lifted by hand from its poolside storage position by an operator standing on the instrument bridge. The instrument bridge should be moved south until the facility footpiece can be inserted in CP-11. The arm at the top of the tube can then be clamped to the support arm.

The removal procedure for this facility is essentially the reverse of the installation procedure.

5.2h. Neutron-Collimator Facility

1. References

a. Drawings. - Figure 5.2.7.

b. Reports. - None.

2. Purpose. - Originally, this facility was constructed to provide the capability for extracting a collimated beam of neutrons from the reactor; however, it is more frequently used as a general-purpose dry facility in which objects (e.g., radiation detectors) are irradiated.

3. Brief Description. - This facility primarily consists of 20 ft of aluminum tubing. The lower 13 ft is 4-in.-OD tubing which has 1/8-in.-thick walls; the upper 7 ft is 5-in.-OD tubing which has 3/16-in.-thick walls. A collimator plug is provided which can occupy the upper 7 ft of the facility; this plug, which can be filled with water, has an outside diameter of 4 1/2 in. and an inside diameter of 1 in.

An aluminum-clad lead shield surrounds a portion of the length of the tube; the bottom of the shield is about one foot above the reactor centerline. The shield absorbs those gamma rays traveling in directions such that they would have a high probability of being transmitted through the top of the facility. (The shield also provides the necessary ballast for the facility.) About one foot below the shield a spacer arm may be fastened to fix the minimum distance to the north face of the reactor.

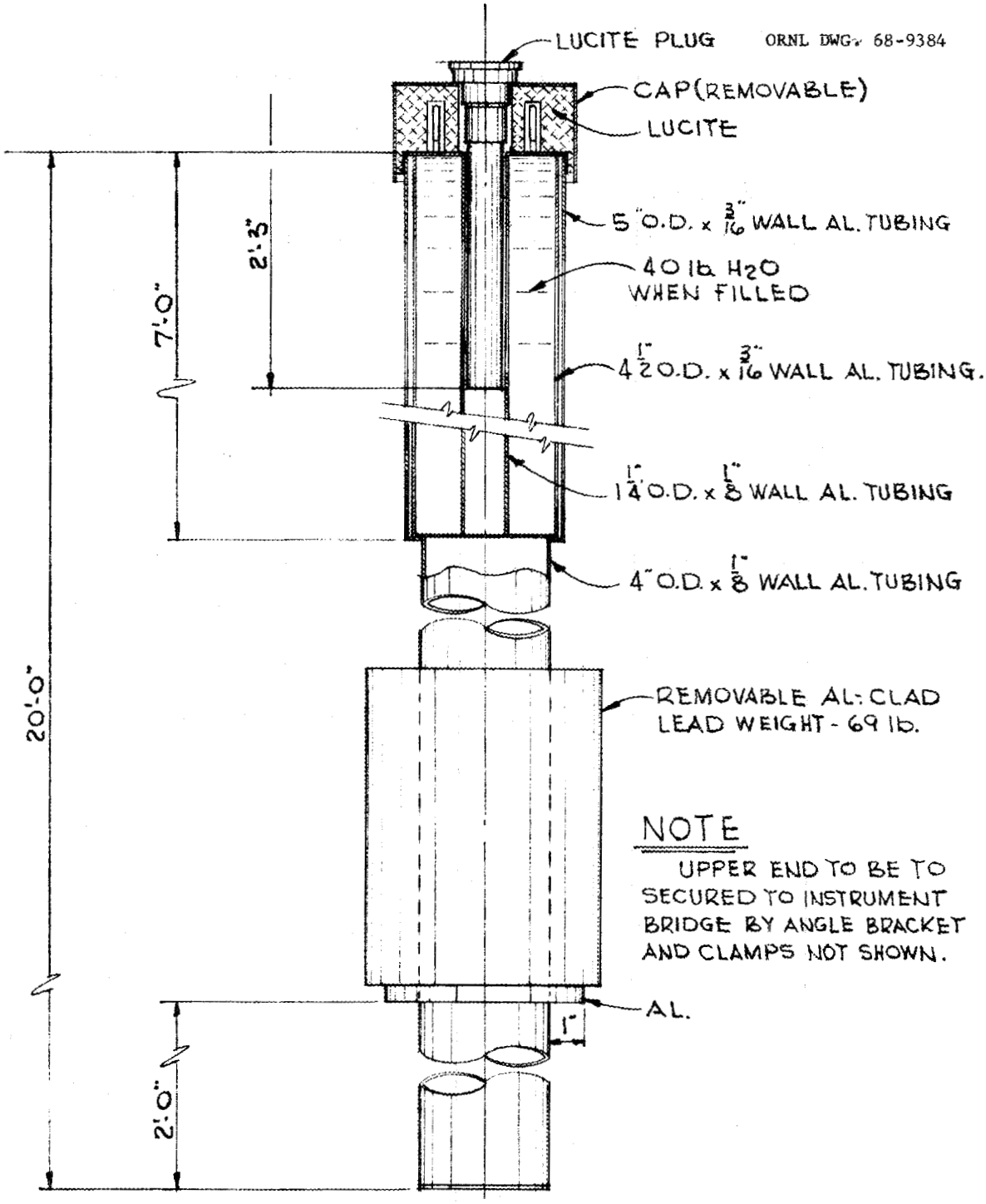

Fig. 5.2.7. Neutron Collimator Facility

At the top of the facility tube an angle bracket and clamps are provided to fasten the facility to the instrument bridge. The west working platform and the piece of grating behind it must be removed to make room for this bracket.

4. Routine Checks. - Routine checks of this facility are not required except for the shift walk-through checks during periods when the facility is installed on the instrument bridge. (When not in use, the facility is stored in the northeast end of the pool.)

5. Instrumentation. - No instrumentation is associated with this facility.

6. Installation and Removal Procedures. - Before installation of this facility, the west working platform and the piece of grating behind it must be removed to make room for the facility support bracket. A choker should be attached to the facility and to the crane hook. Under health physics surveillance, the facility should be raised until it is above the pool water surface. (CAUTION: Although the facility is generally exposed to a relatively low neutron flux for a relatively short time and is therefore only slightly radioactive, health physics surveillance by Health Physics Division personnel or by Operations Division personnel is required. Also during this phase of installation, a man should be stationed at the overhead crane breaker box. This step is required during all times when the crane hook is to be raised or lowered with highly radioactive components attached to the

hook.) The facility should be moved to, and raised above, the instrument bridge. Once the facility tube is south of the instrument bridge it may be lowered until the support bracket rests on the instrument bridge; after the bracket is clamped to the instrument bridge, the choker can be removed.

The reactor can then be moved west to line up with the facility tube. The instrument bridge is next moved south until the center of the facility is 25.8 cm from the north face of the reactor. (At this distance the north-face wedge of the liquid nitrogen cryostat is against the north side of the east D_2O tank; experiment personnel should be consulted if the reactor must be operated at a power level greater than 50 w with the facility in this position.)

The removal procedure for this facility is essentially the reverse of the installation procedure.

5.2i. Miscellaneous Facilities

Because the north face of the reactor is readily accessible, capsules containing materials to be irradiated can be placed adjacent to this face of the core. If their effect on the reactivity of the reactor is immeasurably low, such samples may be suspended from the reactor bridge by metal wire. If their reactivity effect can be measured, some method of preventing such samples from moving must be provided.

A spectrometer crane, although no longer used, is available (refer to Section 11.5 for details).

The instrument bridge may also be used to accommodate various experiment installations. This bridge may be moved north or south by a gear arrangement similar to that provided on the reactor bridge. (A qualified

supervisor must be present during movement of the instrument bridge also.) A grid-type structure, which is attached to the bridge, extends almost to the bottom of the shallow portion of the pool; i.e., almost to the 809-ft elevation. This structure is used to support the in-pool portion of the liquid nitrogen cryostat facility.

5.3. Experiment Instrumentation

The instruments used by experimenters, particularly those related to the reactor control circuits, are carefully chosen for reliability and performance. As noted in Section 1, "Introduction", the safety of the reactor and its personnel is as dependent upon the experiment instrumentation as it is upon the reactor instrumentation. For this reason, all experiment variables which are considered safety problems are dually monitored and doubly tracked. For example, in the case of a temperature variable (measured with thermocouples) having safety implications, two thermocouples would be supplied with a recorder for each thermocouple; and each recorder would have one circuit to initiate an alarm, one circuit for setback, one circuit for reverse, and two circuits to scram the reactor.

Since the BSR is almost always operated for only one experiment at a time, experimenters are allowed the option of providing instrumentation that initiates reactor power reductions to protect experiment data, i.e., where no safety implications are present. (This option is sometimes allowed at the ORR: however, there the value of the particular experiment's data must be evaluated with respect to the needs of other experiments.) When data protection is the only objective, the experimenter must decide for himself the degree of redundancy and the method of power reduction required.

5.4. Experiment-to-Reactor Switches (The E-Panel)[3]

To prevent extensive wiring changes each time an experiment is inserted into, or removed from, the reactor flux, special three-position switches, or E-switches, are used to effect the reactor "tie-in". These switches are located on vertical panel A (see Figure 5.4.1) in the control room and are key-operated. Their use is limited to the reactor supervisor or, during shutdown, to instrument engineers directly in contact with the supervisor. Each E-panel consists of a complex of wiring and relays which enables signals from the experiment instrumentation to be convereted to a specific action; i.e., alarm, setback, and/or scram.

5.4a. Modes of E-Switches

The three switch positions are somewhat self-explanatory. The NORMAL position is to be used when the experiment is in the reactor. In this mode, the experiment is connected to the annunciator panel and, if applicable, to the reactor control circuits. An indicator light at the E-panel should be illuminated indicating that power has been supplied to the E-panel. The switch is not to be turned from this mode while the experiment is in the reactor unless special instructions are issued.

The TEST mode on the E-panel allows the experimenter to simulate any desired condition (scram, setback, etc.) without affecting the reactor. During tests, the feedback of information from the control room is the same as if the experiment were connected to the reactor, except that

---

[3] J. T. DeLorenzo, Guide for the Design of Safety Instrumentation for Experiments in the LITR and ORR, ORNL-TM-77 (December 11, 1961).

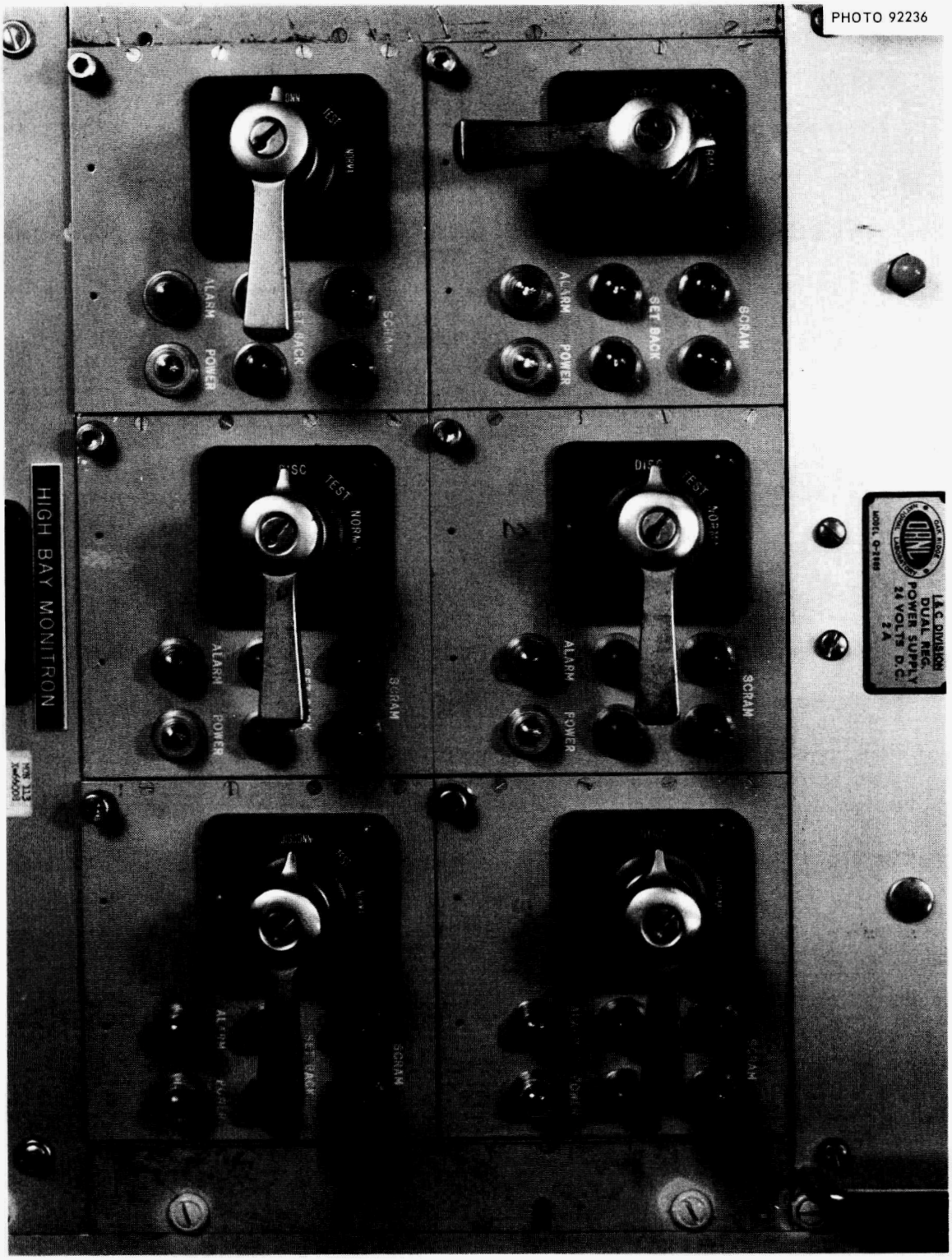

Fig. 5.4.1. E-Panel Switches

except that the experimenter's "tie-in" annunciator will be in the alarm condition. In the TEST position, the control room annunciator station for the experiment will also remain in the alarm condition. In addition, the "power" indicator light at the E-panel will be illuminated.

The DISCONNECT position completely severs the experiment power from the E-panel. In this position, the "power" indicator light will not be illuminated. The "tie-in" annunciator at the experiment control room and the experiment annunciator station at the reactor control room will both be in the alarm condition.

5.4b. Experiment Alarm

Contacts in recorders or other devices at the experiment panel or apparatus serve to actuate local annunciators. Auxiliary contacts within the local annunciators open in the event of an alarm and, in the E-panel, de-energize a relay (K1 series) to actuate the experiment annunciator in the control room. Annunciators other than those associated with scrams, reverses, or setbacks may be made to cause only local alarms if the experiment is manned. (This may be accomplished by bypassing the auxiliary contacts for those annunciators.)

5.4c. Experiment Setback or Reverse

The signal for a setback or reverse comes from contacts in the experiment instrumentation itself and not through the experiment annunciator as in the case of an alarm. A setback signal from a recorder or other device energizes a relay (K3 series) in the E-panel which, in turn, energizes relay K119 (reactor setback) if the E-panel is in the NORMAL mode. Other contacts, within the same instrument, open to de-energize a relay (K2 series) in the E-panel which in turn energizes relay K118

(reactor reverse) if the E-panel is in NORMAL. An experiment reverse will not occur if the reactor instrumentation detects a negative period <100 sec (as displayed by the log-N period recorder) within 4 sec after the E-panel relay (K2 series) is de-energized.

5.4d. Experiment Scram

A scram is initiated by contacts (two per instrument, one normally open and one normally closed) within the experimenter's recorders or other devices. The normally closed contacts open the circuit to de-energize a relay (K4 series) in the E-panel which, in turn, de-energizes relay K1 if the E-panel is in NROMAL. This results in a slow scram. The normally open contacts, similarly, cause a slow scram by energizing a relay (K5 series) in the E-panel which in turn energizes relay K2 if the E-panel is in NORMAL.

NOTE: Since power to each of the E-panels is supplied from each of the experiment control room instrument power supplies, loss of this power supply in an experiment will automatically initiate a reverse and a "drop-out" scram. The scram will normally obscure the fact that the reverse was also initiated; however, if the scram circuit should fail, the reverse action would provide the desired reactor shutdown. This feature is included for all experiments even though normal experiment safety action is restricted to an annunciator alarm.

5.5. General Rules for Review and Approval Procedure for Experiments

5.5a. Introduction

In order to discuss the review and approval procedure for experiments, it is necessary to distinguish between routine experiments, nonroutine experiments, and new experiments. These are defined as follows:

1. Routine experiments are those which are identical in all respects to an experiment which was previously reviewed and approved and was subsequently irradiated and shipped successfully. For a sample to be judged as identical to that of a previous experiment, the following criteria must be unchanged from the previous irradiation:
   a. Sample material and internal packaging materials; i.e., chemical composition, physical form, and weight.
   b. Sample container; i.e., type, size, and number.
   c. Irradiation facility.
   d. Irradiation time.
   e. Reactor power level.
2. Nonroutine experiments are those which are essentially, but not exactly, identical in all respects to an experiment which was previously reviewed and approved and which was subsequently irradiated and shipped successfully. Review of nonroutine experiments is similar to review of new experiments; however, in certain specified circumstances the reactor supervisor may approve the experiment. When approval of the Technical Assistance Department is required, this approval may be given verbally to the BSR supervisor.

3. New experiments are those which, in the opinion of the Technical Assistance Department, are significantly different from any previous experiment. Written approval of the Technical Assistance Department is required. (Design and installation of a new experiment facility must be approved in the same manner as a new experiment.) When review of a new experiment is made, the experimenter will be requested to provide detailed information; and, depending on the complexity of the experiment, the ORNL Reactor Experiment Review Committee may be asked to review it. In such cases, the experimenter will be informed so that appropriate documentation of the proposed experiment can be prepared.

Thus, each in-reactor experiment is subjected to comprehensive reviews and hazards evaluations by the ORNL Reactor Experiment Review Committee and/or by the Operations Division. In this way, an experiment is approved for operation within safety limits applicable only to that specific experiment. Appropriate limits are placed upon any materials, systems, or components that may (for any credible reason) affect the reactor reactivity or reactor physical components in such a manner or to such a degree that unsafe conditions could result.

5.5b. General Criteria

1. With respect to reactivity effects, experiments are considered and approved as follows:

   a. An experiment is approved more or less routinely if the maximum change in reactivity that can be caused by the experiment is conservatively less than the total amount of reactivity controlled by the servo system (less than 0.5% $\Delta k/k$).

b. Experiments having reactivity worths greater than that in item a, above, are considered in more detail, particularly if failure or malfunction of the experiments may cause changes in these values. Considerations are with respect to total worth, rates of change, and to particular situations that may be associated with these changes. Experiments are approved only if it is found incredible that the experiment could cause unacceptable hazards. Review by the ORNL Reactor Experiment Review Committee is required.

c. No experiment will be approved which can cause a rapid change in the reactor reactivity $>1.6\%\ \Delta k/k$.

2. With respect to energy release, experiments are considered and approved as follows:

a. Any explosive or mixture of materials, such as hydrogen oxygen, to be placed in or near the reactor will be limited to the equivalent of 1 g of TNT (1.1 kcal).

b. The energy release which might result from the reaction of any of the so-called reactive materials, such as Na, Li, or K, with the reactor coolant or the experiment coolant by any credible mechanism shall be limited to 100 kcal unless a monitored, double barrier exists between the material and the coolant. Experiments of this type in which the potential energy release is greater than 500 kcal will not be installed without prior approval by the AEC.

5.6. Review, Approval, and Irradiation of Routine Experiments

5.6a. Review and Approval of Routine Experiments

Requests for review of routine experiments, as defined in Section 5.5a, are initially presented to the BSR foreman. The BSR foreman compares the information presented in a completed "Experiment Information" sheet (Example 5.6.1) with the experiment information sheet for the referenced (i.e., previously approved) experiment. If the criteria presented in Section 5.5a are not completely satisfied, the request for review must be referred to the BSR supervisor; however, if the criteria presented in Section 5.5a are completely satisfied, the BSR foreman may approve the experiment (by signing the "Experiment Information" sheet), install, and perform the irradiaton. (If the foreman has any doubt as to the details of the experiment or as to the interpretation of the criteria, he should refer the experimenter to the BSR supervisor.) Once daily, the BSR foreman should inform the BSR supervisor of all experiments for which review has been requested, for which approval has been granted by the foreman, or for which irradiation has been accomplished. In addition, the BSR supervisor should inform the BSR foreman of the status of all experiments for which review by the BSR supervisor or the Technical Assistance Department has been requested.

5.6b. Irradiation of Routine Experiments

During irradiation in a reactor irradiation facility and before removal of the experiment hardware from a "reactor-flux" position, the experiment information sheet and all supplementary information will be kept on the special instructions clipboard, which is hung on the east

Example 5.6.1. Experiment Information Form (UCN-4404)

UCN-4404
(3 3-63)

DATE	CHECKED BY

EXPERIMENT INFORMATION

EXPERIMENT LOCATION	REACTOR	DATE INSERTED	FACILITY

EXPECTED DURATION OF EXPERIMENT

BRIEF DESCRIPTION OF EXPERIMENT

WHOM TO NOTIFY IN CASE OF TROUBLE

NAME	BUSINESS PHONE	HOME PHONE

SPECIAL STARTUP INSTRUCTIONS

WHAT TO DO IN THE EVENT OF AN ACCIDENTAL SHUTDOWN

WHAT SERVICES (GAS, STEAM, CASKS, ETC.) ARE REQUIRED FOR THIS EXPERIMENT

WHAT TO DO IN THE EVENT OF POWER FAILURE

NOTIFY EXPERIMENTER BEFORE SCHEDULED SHUTDOWNS?

Example 5.6.1 (continued)

SPECIAL CHECK OR READINGS TO BE MADE

POSSIBLE TROUBLES

SIGNAL RESPONSE	CAUSED BY	WHAT TO DO
ALARM ONLY		
ALARM AND SETBACK		
ALARM AND SCRAM		
ANY OTHER INSTRUCTIONS		

wall of the reactor bay outside of the control room. Following irradiation in a reactor irradiation facility (either after removal of the facility to a storage location or after removal of the experiment hardware from a "reactor-flux" position) the experiment information sheet and all supplemental information will be kept at the BSR foreman's desk until the experiment hardware is claimed (i.e., shipped) by the experimenter. After the experiment hardware has been claimed, the experiment information sheet and all supplementary information will be placed in the experiment information notebook.

5.7. Review, Approval and Irradiation of Nonroutine Experiments

5.7a. Review and Approval of Nonroutine Experiments

Requests for review of nonroutine experiments, as defined in Section 5.5a should be presented initially to the BSR supervisor. (If they are presented initially to the BSR foreman, they should be forwarded to the BSR supervisor.) The BSR supervisor should compare the information presented in a completed experiment information sheet (complete except for the sections designating the "reactor" and the "facility") with the experiment information sheet for the referenced (i.e., previously approved) experiment. The BSR supervisor should then determine the availability of the desired reactor facility and (with the criteria presented in Section 5.5a) should carefully evaluate the effect of the differences between the proposed experiment and the previously approved experiment. He must determine that the differences do not result in exceeding previously established safety limits. While making this determination, he should consider factors such as, but not limited to, the following:

1. Compatibility of materials with one another and with various environments.
2. Behavior and durability of materials during, and subsequent to, irradiation.
3. Temperature effects on materials.
4. Heat-production and -dissipation mechanisms in the irradiation facilities.
5. Handling of radioactive materials.
6. Corrosion.

7. Use and limitation of the waste disposal systems for radioactive liquids, gases, and solids.

8. Reactor power level and irradiation time.

If, after his review, the BSR supervisor determines that previously established safety limits will be exceeded or might be exceeded, he should request review by the Technical Assistance Department; subsequent approval by that deparement may be given verbally to the BSR supervisor. However, if, after his review, the BSR supervisor determines that no previously established safety limit will be exceeded, he should verbally notify the Technical Assistance Department that he finds that the proposed experiment does not exceed previously established safety limits (as established by the previously approved experiment). Upon request he will provide the Technical Assistance Department with information as to the difference between the proposed and the previous experiment. If, in the opinion of the Technical Assistance Department, no further review is required, the BSR supervisor will approve the experiment.

When approval is granted, the BSR supervisor should sign the experiment information sheet after filling in the "reactor" and "facility" blanks; the BSR foreman should be informed verbally.

If review by the Technical Assistance Department is required and if the review cannot be accomplished quickly (either because previously established safety limits might be exceeded, because more information is required, because another BSR facility is more suitable for the experiment, or because a facility in another reactor is more suitable), the Technical Assistance Department should inform the BSR supervisor and the experimenter. If the Technical Assistance Department determines

that the experiment deviates from the definition of routine experiments sufficiently to constitute a new experiment, as defined in Section 5.5a, the procedure outlined in Section 5.8 applies.

5.7b. Irradiation of Nonroutine Experiments

This procedure is identical in all respects to that presented in Section 5.6b.

5.8. Review, Approval, and Irradiation of New Experiments*

5.8a. Review and Approval of New Experiments*

The following procedures are for the handling of new research experiments from the time of initial contact by the research personnel with Operations personnel until the termination of the experiment operation.

1. Preliminary Contact of Operations by Research. - Research personnel may initially contact anyone in the Reactor Operations Department. When this occurs, the research man shall be directed to the Technical Assistance Department. In some cases, initial discussions may be desirable with the reactor supervisor to determine that irradiation space is available.
2. Preliminary Review and Space Assignment. - The reactor supervisor will handle the space assignments and will obtain technical aid from the Technical Assistance Department. After all space assignments and other initial decisions have been made by the Reactor Operations Department and the Technical Assistance Department, the experimenter will work directly with the General Engineering Division and/or the Instrumentation and Controls Division, if applicable, on the experiment design.
3. Assignment of the Experiment to Technical Personnel. - After all preliminaries have been completed, the handling of the experiment will be turned over to a member of the Technical

*This procedure also applies to new irradiation facilities.

Assistance Department selected by the superintendent of that department. The duty of this technical man is to see that initial requirements in the design and installation of the experiment are met by the experimenter. He will also see that any necessary changes or developments in design and installation have the approval of the Reactor Operations Department. He will ensure that the initial requirements of the Operations Division or of the Reactor Experiment Review Committee for the design and installation of the experiment are met by the experimenter. He will also see that any necessary changes or developments in design and installation have the approval of the Operations Division. He will require that the research personnel complete, at the earliest possible date, a questionnaire for experiment review and submit it to the Technical Assistance Department for obtaining the necessary approvals. This questionnaire may be of a rudimentary nature to establish the operability of the experiment and to be reviewed only by Operations Division personnel. If this is done, preparation of a more detailed questionnaire may be required later for safety review by the Operations Division and, in many cases, by the Reactor Experiment Review Committee. The experiment must be approved before the experiment can be installed. If the research personnel so desire, the detailed questionnaire may be completed initially and may also serve as the operability questionnaire; however, the operability review should generally be done before the experiment is completely designed. (For relatively non-complex experiments, a letter containing a detailed description

and sketches may sometimes be substituted for either or both types of questionnaire. For complex experiments, a formal report containing a detailed description and safety analysis may sometimes be substituted for either or both types of questionnaire.)

4. Operability Review by Operations Division. - The operability review should be made in the early stages of design. This may involve only a meeting with Operations Division personnel to review the following items:

   a. Operational feasibility and compatibility with other experiments and with reactor operations.

   b. Adequacy of equipment design from the standpoint of installation into, and removal from, the reactor.

   c. Provisions for neutralizing the equipment, in case of failure, so that operation can continue.

5. Final Review by the Technical Assistance Department and Operations Division. - When the technical man is satisfied with the review questionnaire, it will be turned over to the head of the Technical Assistance Department for final approval by the Operations Division. If the experiment is not approved by the Operations Division, the questionnaire and comments will be given back to the technical man for revision by the research personnel. In some instances, for the purpose of clarification, it may be desirable to arrange a meeting between research personnel, the Operations Technical Assistance Department head, and other Operations Division personnel before approval is given.

6. Review by the Reactor Experiment Review Committee. - When the requirements of the Operations Division for the overall experiment are met, the head of the Technical Assistance Department may request that the Instrumentation and Controls Division make a final review of safeguard instrumentation, if applicable. When the final review is satisfactory, written approval for the experiment will be given by the head of the Technical Assistance Department (or his designated alternate). At the same time the head of the Technical Assistance Department will request that the experiment be reviewed by the Reactor Experiment Review Committee if it is considered sufficiently complex, hazardous, or different from already approved experiments; otherwise, the experiment will be considered approved for operation in a reactor. Those experiments requiring review by the Reactor Experiment Review Committee will be considered ready for operation only after being reviewed and approved by the Committee.

7. Installation and Inspection of the As-Built Experiment

   a. All aspects of the installation of the experiment, including the scheduling of the time of installation, will be handled by the reactor supervisor with Technical Assistance Department aid (if any aid is desired by the supervisor). After the installation is complete, a final inspection is made by the reactor supervisor and Technical Assistance Department personnel in order to determine that the "as-built" equipment meets the required specifications. Also, the specimens to be irradiated should be inspected, by the same personnel, if possible, before initial irradiation in the system.

b. After the experiment equipment is installed, the responsibility for liaison between Operations Division and research becomes the responsibility of the reactor supervisor who may, at any time, request assistance from the Technical Assistance Department.

5.8b. Irradiation of New Experiments

This procedure is identical in all respects to that presented in Section 5.6b.

5.9. Changes in Operating Experiments

From time to time, either due to malfunctioning instrumentation or for various other reasons, an experimenter may wish to change the status of his experiment. Usually, these changes consist of altering a monitored parameter's alarm setpoint or disconnecting the experiment from the safety circuit (E-panel). Before any actual changes are made, the experimenter must submit to the reactor supervisor an "Experiment Status Change Request" form (Example 5.9.1) indicating the changes to be made. When the supervisor in charge at the BSR receives the form, he should check to see that it has been signed and filled out properly; he will then place the form in the experiment notebook located in the BSR control room office.

Example 5.9.1. Experiment Status Change Report (UCN-2166)

EXPERIMENT STATUS CHANGE REQUEST

DATE

REQUESTER

EXPERIMENT IDENTIFICATION

CHANGE(S) REQUESTED

REASON FOR CHANGE

PRECAUTIONS TO BE TAKEN

CHANGE(S) APPROVED BY

OPERATIONS

EXPERIMENTER

OTHER

CHANGE(S) COMPLETED BY

NAME

DIVISION

DATE

UCN-2166
(3 2-67)

5.10. Operational Procedures

5.10a. Sample Scheduling and Records

Upon receiving a sample to be irradiated, the BSR foreman will prepare a "Sample Schedule Sheet" (Example 5.10.1). This form, filled out in duplicate, will contain the following information:

1. Date the sample was submitted.
2. Experimenter's name, division, and charge number.
3. Material to be irradiated.
4. Irradiation facility.
5. Power level.
6. Sample number.
7. Approval signatures.

The sample numbers are coded as indicated in the following example: 68-7-6 - the first set of digits, 68, indicates the year (1968); the next didit, 7, indicates the month (July); and the last digit, 6, indicates that the sample is the sixth received during that month. These numbers are to be placed on the sample.

The approval signature may be that of the foreman if the sample is identical with one previously irradiated; if there are any deviations, the BSR reactor supervisor must sign the sheet.

A "sample notebook" is also maintained by the BSR foreman. This book contains the same information as the sample schedule sheet and is filed on the foreman's desk.

It should be noted that the experiments described in the preceding sections, and for which "Experiment Information" sheets have been prepared, will also require preparation of the "Sample Schedule Sheets".

Example 5.10.1. Sample Schedule Sheet (UCN-8894)

SAMPLE SCHEDULE SHEET

BSR

APPROVED	
DATE	NAME

DATE	SAMPLE NO.

MATERIAL AND WEIGHT

MATERIAL AND HOLDER WEIGHT

CUSTOMER	DIVISION

E. D20	CENTER	E	SE	NE	SW	NW	OTHER
TUBE NO.	1	2	3	4	5	6	

	SCHEDULED		ACTUAL		
	DATE	TIME	DATE	TIME	BY
IN					
OUT					

POSITION (BOTTOM TO TOP)

1 2 3

DISPOSITION	PICKUP BY	DATE	TIME
SCHEDULED			
ACTUAL			

CHARGE CODE	POWER LEVEL

REMARKS

UCN-8894
(3 9-68)

However, since many samples are categorically routine, they will require only the "Sample Schedule Sheet".

Four clipboards on which the "Sample Schedule Sheets" are placed are located in the control room annex and are labeled as follows:

1. Samples to be inserted.
2. Samples being irradiated.
3. Samples pulled up for decay.
4. Samples in storage.

For irradiations which will be completed during the 8-4 shift on the day the sample is scheduled, both copies of the "Sample Schedule Sheet" are kept on the appropriate clipboard at the BSR. For irradiations which continue into or throughout the evening and/or midnight shift, the original copy of the "Sample Schedule Sheet" will be transferred to the ORR control room and placed in racks which are also labeled with the four above categories. The BSR foreman is responsible for the transfer of sample schedule sheets to the ORR control room.

When the irradiation is completed and the experimenter claims the sample, the carbon copy of the "Sample Schedule Sheet" is given to the experimenter; and the original copy is filed in the BSR foreman's desk.

5.10b. Sample Handling

1. Storage Prior to Irradiation. - The samples, properly identified, will be placed in the storage rack located under the clipboards by the person who schedules the sample. If radioactive, the sample will be placed in an appropriate shield.
2. Preparation for Irradiation. - Prior to the time for the irradiation to begin, the sample should be prepared by the attachment of string or wire for support in the facility as follows:

a. In the East D_2O Tank

(1) For irradiations up to one hour, small nylon (~1/16-in. diam) string is used.

(2) For irradiations up to six hours, large nylon (~1/8-in. diam) string is used.

(3) For irradiations of greater than six hours, aluminum wire should be used in the flux region.

b. In other facilities, such as the north-face tube and CP-15 or CP-11, aluminum wire will generally be used to support the sample.

3. Irradiation. - The sample will be lowered into the irradiation facility designated at the scheduled time using the following guidelines:

a. East D_2O Tank

(1) Lower the sample to the bottom of the tube.

(2) Allow the second sample, or third, to come to rest atop the sample below it.

(3) Record the actual "time in" on both copies of the "Sample Schedule Sheet" and initial the entry.

NOTE: Only the north and south tubes at the east D_2O tank are to be opened while the reactor is operating.

b. Other Facilities

(1) Lower the sample to the position designated on the "Sample Schedule Sheet" or in other special instructions.

(2) Follow any special precautions relative to radiation hazards which might be encountered.

(3) Record the actual "time in" on both copies of the "Sample Schedule Sheet" and initial the entry.

4. Postirradiation Handling. - At the end of the irradiation period, pull the sample from the flux and:

a. East D_2O Tank

(1) Allow sufficient decay time to permit removal to storage or to a shield.

(2) Allow to decay in accordance with instructions on the "Sample Schedule Sheet".

(3) Record the actual "time out", on both copies of the "Sample Schedule Sheet" and initial the entry.

b. Other Facilities

(1) Follow special instructions on the "Sample Schedule Sheet".

(2) Record the actual "time out" on both copies of the "Sample Schedule Sheet" and initial the entry.

5. Shipping Samples

a. Follow approved procedures for shipping radioactive materials. Refer to No. 28 of the ORNL Health Physics Manual and No. 4.1 of the ORNL Health Physics Procedure Manual.

b. Health physics coverage should be provided to assure radiation control.

6. REACTOR COOLING SYSTEMS

6.1. The Primary-Water Cooling System

6.1a. References

1. P 20310 EC 001, Cooling Water System - Flow Sheet
2. P 20310 EC 010, Cooling Water Plan - Sheet 1
3. P 20310 EC 011, Cooling Water - Section
4. P 20310 EC 012, Cooling Water - Sections and Details
5. P 20310 EC 013, Decay Tank Modification
6. P 20310 EC 020, Underground Reactor Water, Air Off-gas - Plan
7. P 20310 EC 021, Profile of 8-In. Underground Reactor Water Lines to and from Heat-Exchanger Pump House
8. P 20310 EC 031, Heat-Exchanger Piping - Plan
9. P 20310 EC 032, Heat-Exchanger Piping - Sections Sheet 1
10. P 20310 EC 033, Heat-Exchanger Piping - Sections Sheet 2
11. M 20310 YC 043, Demineralizer Assembly
12. M 20310 YC 044, Demineralizer Regenerant System
13. P 11246 PF 001, Degasser Tank - Installation Plan and Section
14. S 11274 PF 001, Relocation of dp Cells - Plan Elevation and Details

6.1b. Introduction

The major components of the primary cooling system are:

1. The centrifugal pump, which is rated at 1230 gpm flow with a discharge pressure of ~35 psig.
2. A shell-tube heat exchanger rated at 2 Mw.
3. The reactor pool itself, which holds approximately 130,000 gal of water.

4. The reactor core and lower plenum.

5. A decay tank, which also serves as a receiving tank.

6. The piping necessary to interconnect these components.

In addition, the primary system is equipped with surge and gas-removal tanks, vent systems, and a cleanup system, which includes a two-column demineralizer. The reactor cooling systems are shown schematically in Figure 6.1.1.

6.1c. Description

The reactor grid plate is supported on a plenum (referred to as the "water manifold and reactor-grid support", which is shown as item 3 in Figures 6.1.2 and 6.1.3). The entire south end of this plenum consists of a flapper-type valve which, when opened, allows the reactor to be cooled by natural convection of the pool water; the flow pate for natural-convection cooling is shown in Figure 6.1.3. Operation of the reactor in this mode (Mode 1) is permitted at power levels of 1,000 kw or less. (Reactor operation in Mode 1 is restricted, administratively, to those occasions when the forced cooling system is not available for use.)

By contrast, power levels up to 2000 kw are permitted when the reactor is operated in Mode 2 (forced flow with the flapper-type valve closed).

Forced convection is established by pumping water from the decay tank to the pool, thus creating a differential static head between the pool water level and the level in the decay tank. This differential head causes water to flow downward through the reactor core, through the plenum, and then through both movable and fixed piping to the decay tank. The moving piping consists of: the i-in.-diam (schedule 40 pipe) riser; the

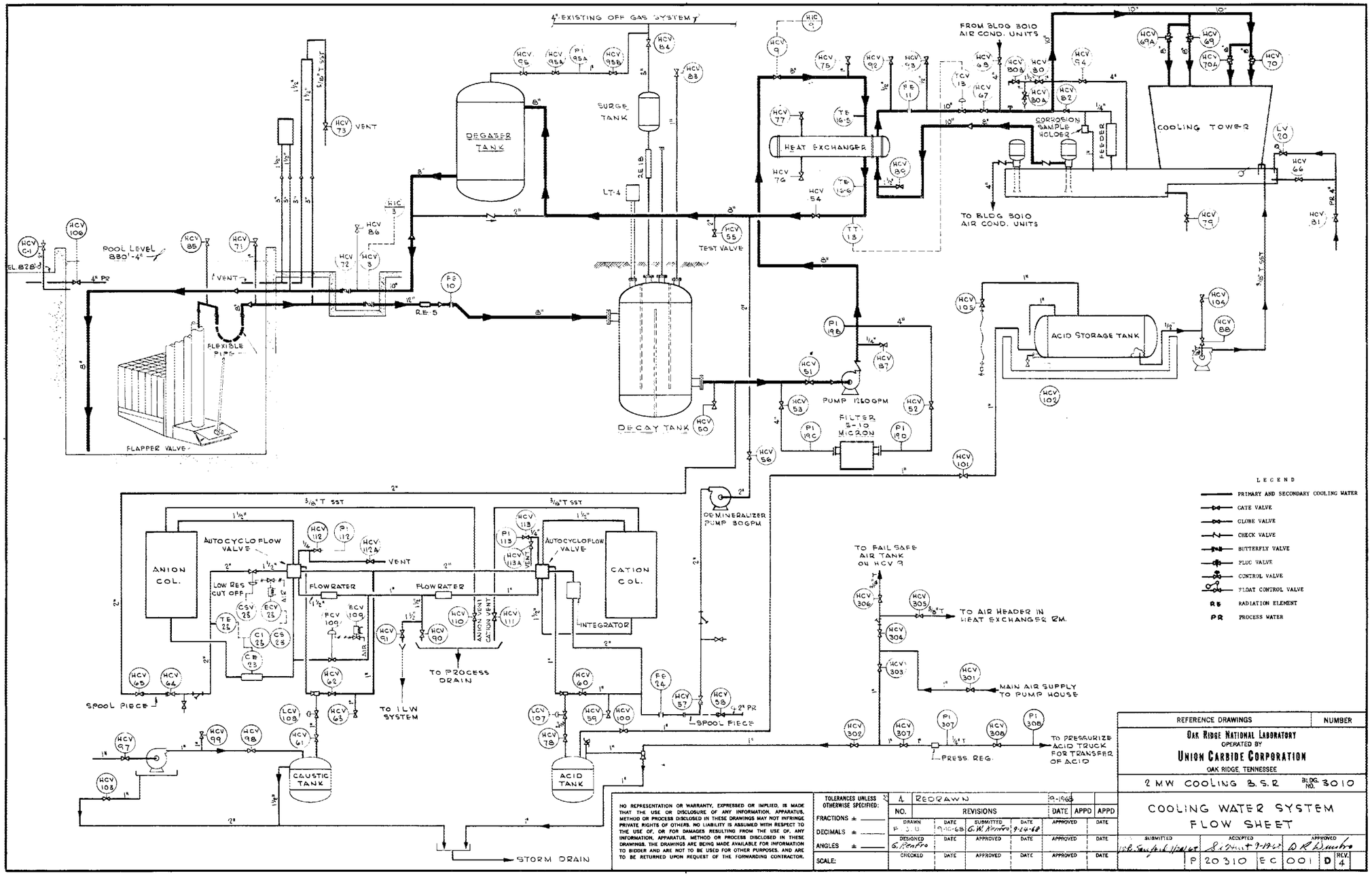

Fig. 6.1.1. 2 Mw BSR Cooling Water System Flow Sheet

ORNL DWG. 67-5973

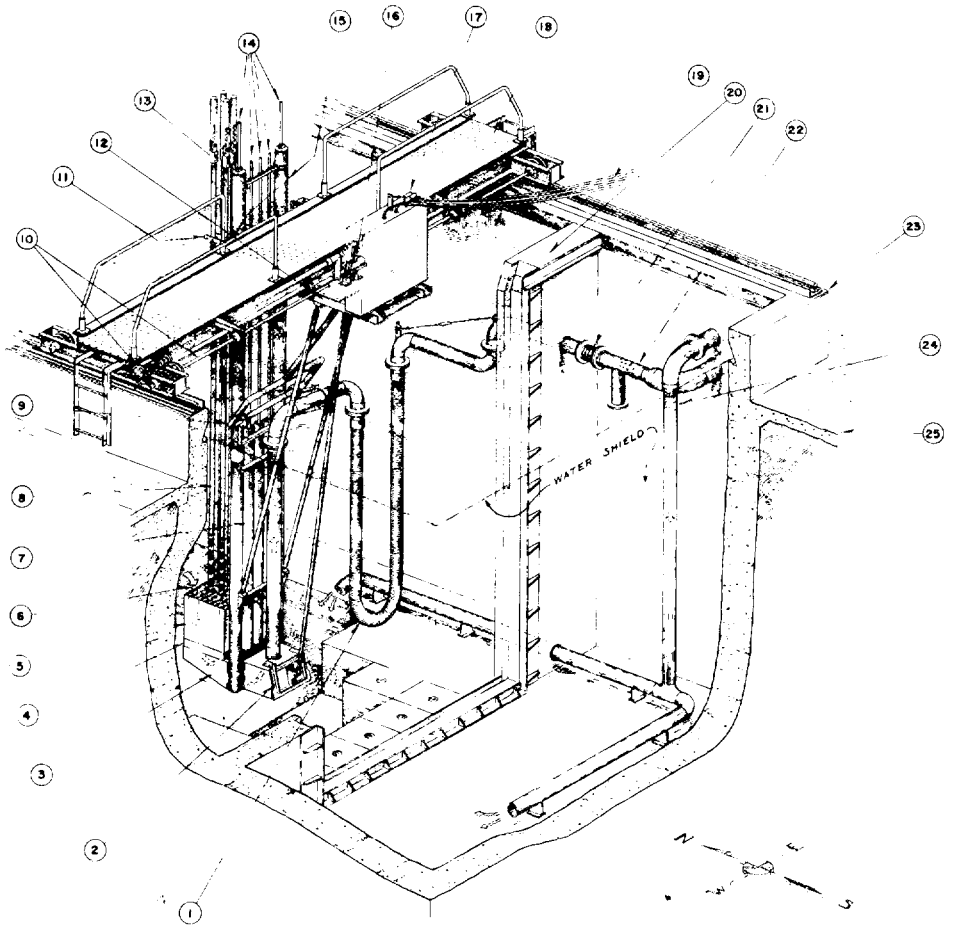

— LEGEND —

1. FLEXIBLE COOLING-WATER LINE
2. NATURAL-CONVECTION-COOLING INLET VALVE
3. WATER MANIFOLD AND REACTOR GRID SUPPORT
4. FUEL-ELEMENT GRID PLATE
5. FUEL ELEMENTS (REACTOR CORE)
6. REACTOR COOLING-WATER INLET
7. IONIZATION CHAMBERS AND GUIDES
8. SHIM-ROD-DRIVE GUIDE TUBES
9. WATER SPRAY SYSTEM FOR NITROGEN-16 DISPERSION
10. NORTH-SOUTH TRAVERSING DRIVE
11. SHIM-ROD-DRIVE LATCH BAR
12. REACTOR SUPPORT CARRIAGE
13. SHIM-ROD DRIVE MOTOR AND GEAR BOX
14. IONIZATION-CHAMBER SUPPORT TUBES
15. REACTOR SUPPORT TUBES
16. INLET-VALVE OPERATOR
17. INSTRUMENT AND CONTROLS JUNCTION BOX
18. REACTOR SUPPORT BRIDGE (MOBILE)
19. REACTOR INSTRUMENT AND CONTROL CABLES
20. DAM WITH GATE REMOVED
21. EXPANSION JOINT
22. REACTOR COOLING-WATER LINE TO HEAT EXCHANGER
23. POOL PARAPET
24. REACTOR COOLING-WATER RETURN LINE FROM HEAT EXCH.
25. FLOOR LEVEL OF BUILDING

Fig. 6.1.2. Isometric Drawing of the In-Pool Portion of the Forced-Convection Cooling System for Mode-2 Operation

ORNL DWG. 67-5975

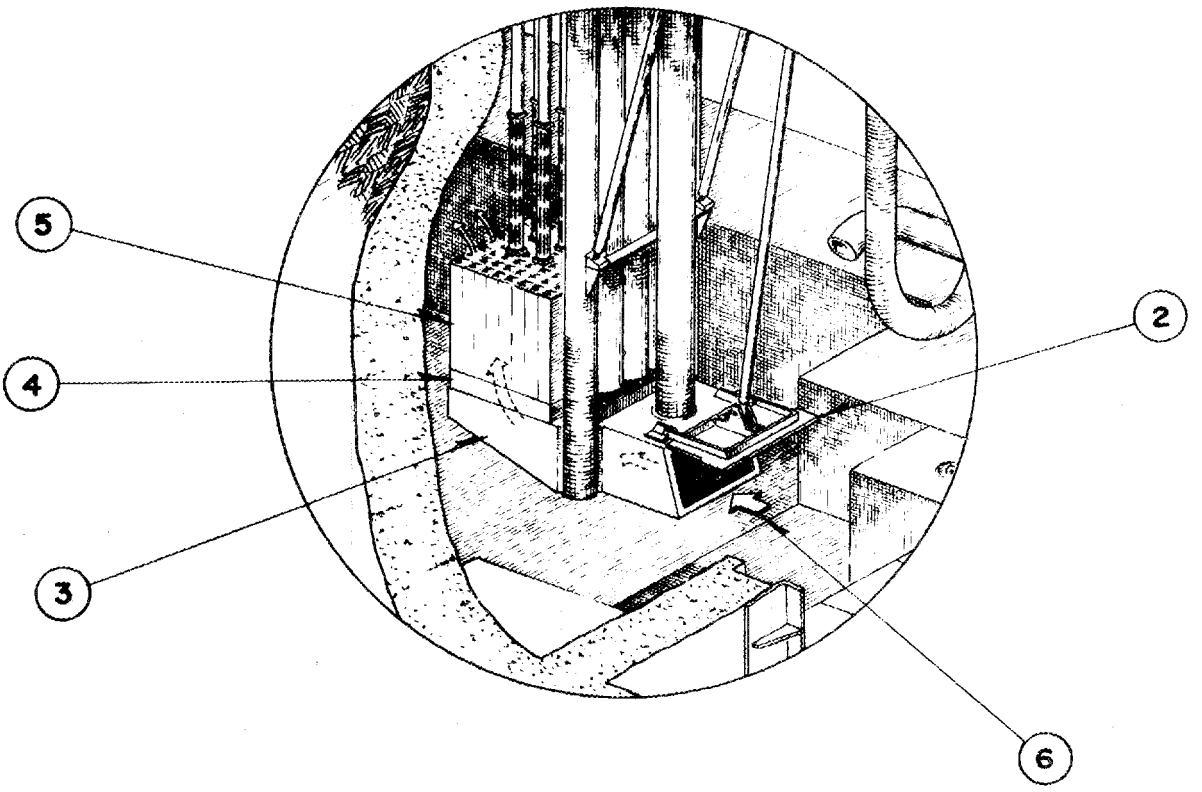

Fig. 6.1.3. Restricted Isometric View of the BSR Showing the Flow Path for Natural-Convection Cooling During Mode-1 Operation

8-in.-diam inverted U-section; the flexible stainless steel pipe;[1] and the shaft swivel arm which is located just north of the jam for the east dam. (On both ends of the flexible stainless steel pipe and on the end of the shaft swivel arm which terminates just north of the east-dam jam are swivel joints.[2,3] These joints and the flexible stainless bellows allow the reactor to be positioned at any location within a 12-ft-long by 25-ft-2ide area). The swivel arm is attached at one end to the fixed piping which is described below.

From the north side of the east pool jam to the southeast corner of the pool wall, the fixed exit piping is 8-in.-diam aluminum pipe (except for a short 8-in. stainless steel expansion joint). From the southeast corner of the pool wall, past radioactivity monitor RIM-5, through the hand-controlled, air-positioned exit valve (HCV-3) to just outside the southeast wall of the building, the piping is 12-in., schedule 40 stainless steel pipe. From the southeast wall of the building to the decay tank, the exit water flows through 8-in. schedule 10 stainless steel pipe. The reactor flow orifice plate is located in this portion of the line. (The orifice plate is 1/8-in. thick and has a 6.1086-in. bore.) The water is discharged into the bottom of the east side of the

---

[1]The flexible pipe is corrugated stainless steel, 8-in. diam with 0.020-in.-thick walls.

[2]Swivel action at the ends of the bellows is permitted simply by use of moderately loose-fitting straight threads on the stainless bellows cuffs and the mating aluminum fittings. About 2 in. of threads are used to minimize leakage and the loose fit permits free rotation. A maximum rotation of 1 1/2 turns of the flexible pipe is permitted.

[3]The swivel arm is attached to the fixed piping by use of a lap-joint flange having machined Teflon gaskets between the metal surfaces. This permits easy rotation of the swivel arm with only a slight loosening of the flange bolts.

decay tank. After passing around the transverse baffle, the water is withdrawn from the bottom of the west end of the decay tank by the primary circulating pump. From the discharge of the pump, the water is forced through the shell side of the heat exchanger via HCF-9 to the degasser tank (HCV-9 is an air-operated, hand-controlled valve). The water is introduced to the degasser tank and swirls clockwise until it is removed and allowed to return to the pool. (The air volume above the water level in the degasser tank is connected to the normal off-gas system. In addition, the air volume above the water level in the decay tank is connected to the normal off-gas system via the off-gas surge tank. The radioactivity of the gas introduced to the normal off-gas system is monitored at this point by RIM-18.)

The by-pass demineralizer is supplied ~26 gpm from the discharge of the shell side of the heat exchanger; the demineralizer, which consists of a cation bed and an anion bed, returns its effluent just upstream from the primary circulating pump. (When the primary pump is shut down and HCV-9 is closed, the demineralizer circulates water backward through the system. The inlet water is supplied by the 2-in.-bypass line around the degasser tank and the exit water is returned to the pool via the normal pool water exit line.)

6.1d. <u>General Precautions</u>

1. Before establishing forced cooling flow, ensure that the main inlet and exit line valves (HCV-3 and HCV-72), located in the valve pit, are open and that HCV-9, located at the discharge of the primary circulating pump, is closed. (It is possible to overflow the pool and to shock the degasser tank if forced cooling flow is improperly established.)

2. Avoid large or sudden changes in the decay tank water level. (Improper valving could result in such changes.)
3. Before establishing forced cooling flow, ensure that proper communication is established between personnel in the control room and personnel in the pump house or in other similar areas.
4. Never energize the primary pump motor when operating the reactor in Mode 1. (With the flapper valve open, there would be some interference with natural convection cooling if the primary pump were started.)
5. Ensure that any changes in the status of the cooling system are understood before any reactor startup.

6.1e. Operational Procedures

1. To Establish Flow in the Primary System

   a. Determine that conditions in the primary loop are in compliance with Section 6.1d.4, "General Precautions."

   b. Energize the circulating pump using the controls on the control room panel. (The electrical switchgear at the pump house would normally remain energized: if the pump does not start, check the local controls.)

   c. Slowly open valve HCV-9 (HCV-9 is remotely operated from HIC-9 located on the control room panel) until a flow rate of approximately 1125 gpm is indicated by the recorder in the control room. Also observe the decay-tank-level indicator. The water level in the decay tank should remain above 160 in.

d. Slowly close valve HCV-3 (HCV-3 is remotely operated from HIC-3 on the control room panel) until a flow rate of about 1100 gpm is indicated by the recorder in the control room. Also observe the decay-tank-level indicator; it should stabilize at about 135 in.

NOTE: The core ΔP should be about 6.5 in. H_2O with the shim rods withdrawn and with a flow rate of approximately 1100 gpm; if it is appreciably lower than this, check the flapper valve and check the swivel joint located in the northwest side of the dam jam. If the ΔP is much too high, check the core for obstructions.

2. <u>To Stop Flow in the Primary System</u>

a. Turn the pump control knob on the control room panel to the OFF position. (NOTE: Flow from the pump to the pool will be stopped very soon after the pump is turned off; however, flow from the pool to the decay tank will continue until the decay tank and its associated vent lines are filled to the pool level.)

b. Open the flapper valve.

c. Close valve HCV-p (pump exit) which is remotely operated from HIC-9 in the control room.

d. Open valve HCV-3 (reactor exit) to the fully open position.

6.1f. <u>Cooling System Startup Checks for Mode-1 Operation</u>

Mode 1 is categorically the "low-power-range" of operation. Reactor power level in this mode of operation is restricted to 1 Mw or less; in this mode the flapper valve is open and the core is cooled by natural convection. (NOTE: This mode is administratively restricted to those

times when reactor operation is required while the forced cooling system is not operable.)

Section C of the "BSR Start-up Check List" shall be completed prior to operating the reactor in this mode. The following items shall be checked or accomplished before operating the reactor in Mode 1; these items are listed in the order in which they appear in Section C of the BSR Start-up Check List.

1. Pool Filled to Proper Level and All Pool-Level Alarms Cleared. - The pool water is maintained at a level between 4 and 7 in. from the top of the pool parapet. If the water is raised above the 4-in. level, it will overflow to the storm drain through the 1 1/2-in. overflow pipes located at each corner of the pool. If the water level is lowered below 8 in. from the parapet, the skimmer cannot be used. (See Section 6.1h for procedural details on filling and draining the pool.)

2. Flapper Valve in Fully Open Position. - To open the flapper valve, unlock the yellow-handled lever on the reactor bridge and rotate the lever 180° (until the handle points east and the guide pin on the gear mechanism falls into position); visually inspect the flapper valve and check the annunciator and indicator lights in the control room.

3. Demineralizer in Service. - The primary demineralizer unit located at the pump house and described in Section 6.1j of this manual is normally in service continuously; however, when this unit is unavailable for use during extended periods of time, the auxiliary unit should be placed in service.

The auxiliary unit, located on the west side of Building 3010, is normally in standby. If it is to be placed in service, refer to Section 6.1j, Part 2.

4. Water Purity Adequate. - The normal resistivity of the water entering the primary demineralizer is approximately 1,000,000 ohm-cm; the normal resistivity of the water leaving it is 2,000,000 ohm-cm. (The corresponding values for the auxiliary demineralizer are 700,000 and 1,000,000, respectively.) The pH of the reactor cooling water should be between 5.5 and 6.5. The last two figures are nominal limits which may be exceeded for short periods of time without requiring a reactor shutdown. If the resistivity of the water leaving the demineralizer is not higher than that of the water entering, the demineralizer should be removed from service.

5. Skimmer System in Operation. - The skimmer system serves to remove floating debris from the water. Operation is desirable, but not mandatory. The system is described in Section 6.1i of this manual.

6. Jets on for Operation at Above 100 kw. - The water jets are used to help minimize direct radiation from the surface of the pool due to ^{16}N activity. Procedures for their operation are included in Section 6.1i.

6.1g. Cooling System Startup Checks for Mode-2 Operation

Mode 2 is categorically the "forced convection" mode of operation; the flapper valve is closed and the core is cooled by the forced-flow system. In this mode, the reactor may be operated at power levels up to 2 Mw.

Section D of the "BSR Startup Check List" shall be completed prior to operating the reactor in this mode. The following items shall be checked or accomplished before operating the reactor in Mode 2; these items are listed in the order in which they appear in Section D of the BSR startup check list.

1. Pool Filled to Proper Level. - Same as indicated in Section 6.1f.
2. All Pool Level Alarms Cleared. - Same as indicated in Section 6.1f.
3. Primary Cooling System Filled and Vented. - Under normal operating conditions, it is not necessary to fill or vent all portions of the primary system. Normally, the system remains filled with water and venting may be accomplished, before starting the primary pump, by momentarily opening vent valves HCV-75 and HCV-76 (both located in the heat-exchanger room). However, if any portion of the system had been drained for any reason, then that portion would have to be refilled with pool water as detailed in Section 6.1h.

   It should be realized that some bubbles of air would, in all probability, be discharged to the pool even after venting is accomplished if the system had recently been filled. However, excessive bubbling should call for an investigation of possible leaks. The primary pump has been the source of such difficulties in the past and should be checked for excessive noise and to insure that there is sufficient water flow to the seals.
4. HCV-3 Fully Open and HCV-9 Fully Closed. - These hand-controlled air-operated valves are positioned by air-pressure regulators located in vertical panel H in the control room.

5. Flapper Valve in Fully Closed Position. - To close the flapper valve, unlock the yellow-handled lever on the reactor bridge and rotate the lever 180° (until the handle points west and the guide pin on the gear mechanism falls into position); visually inspect the flapper valve and check the annunciator and console indicator lights in the control room.

6. Primary Cooling System Flow Established. - Forced convection is required (administrative requirement) for 2-Mw operation. The primary flow should be stable at a rate of approximately 1100 gpm. The decay-tank level should be about 135 in., and the core ΔP about 6.5 in. of H_2O. A detailed procedure for establishing flow in the primary system is presented in Section 6.1h.

7. Demineralizer in Service. - This is the same as in Section 6.1f.

8. Water Purity Adequate. - This is the same as in Section 6.1f.

9. Secondary Cooling System Filled, Treated, and Ready for Service. - If the temperature of the water returning to the pool increases above 105° F (measured at the exit line of the heat exchanger), the secondary water system should be placed in service. For details of this procedure, refer to Section 6.2e.

10. Both the Exit-Water and Decay-Tank Off-Gas-Activity Monitors Operating. - Rotate the knob on each electrometer (located on the control room panel) to each of the three calibration positions indicated; the meter readout should be in agreement. Leave the knobs on the OPERATE position .

Check to see that the radiation levels increase as the power level is raised to 2 Mw (indicated on the multipoint recorder chart). At 2 Mw, normal radiation levels are 10 r/hr at the exit water line and ~5 mr/hr at the normal off-gas surge tank.

11. Skimmer System in Operation. - This is the same as in Section 6.1f.

6.1h. Filling and Draining the Pool and Primary Water Lines

Under normal operating conditions, water will have to be added to the pool periodically to compensate for losses due to evaporation and possible leakage.

1. To Add Water to the Pool

   a. Open the demineralized-water-supply valve in Building 3004. (This valve normally remains open.)

   b. Open valve C-1 located on the west wall of Building 3010.

   c. Close valve C-1 when the proper water level is attained. (Also close the demineralized-water-supply valve in Building 3004 if opening it was required to complete Step 1.)

2. To Drain the Pool

   a. Determine the level to which the water will be lowered; if significant enough to create a radiation hazard, relocate the radioactive material accordingly. (Also, notify all experiment personnel, especially the liquid-helium-cryostat experiment personnel and the fission-spectrum-experiment personnel.)

   b. Close valves HCV-3 and HCV-72 located in the valve pit if the pool is to be drained below the 825-ft 10-in. elevation.

c. Open the drain valve in the pool; use the T-handled tool provided.

d. Open valve A-18 on the suction side of the pump (located in the BSR vault).

e. Energize the pump motor. If the pump needs priming, open valve C-11 on the discharge side of the pump. (NOTE: There are no water-storage facilities; water is drained to the storm drains.)

3. <u>To Fill the Decay Tank</u>

a. Close valve HCV-50 at the pump (if this valve had been used to drain the line).

b. Close vent valve HCV-73 on the syphon-break line (if this valve is open).

c. Slowly open valve HCV-3 in the valve pit while observing the decay-tank-level indicator in the control room.

d. When the decay tank is filled to about 150 in., close vent valve HCV-83; and, if it is not already opened, open off-gas valve HCV-84 about 4 turns.

4. <u>To Drain the Decay Tank</u>

a. Close valve HCV-3 in the valve pit.

b. Close valve HCV-51, -53, and -65 at the inlet to the circulating pump.

c. Close valve HCV-84 to the off-gas system (located at the southeast corner of Building 3010).

d. Open valve HCV-50 at the pump. (A fire hose must be connected to the discharge of this valve to route the water to the storm drain.)

e. Open valve HCV-83 (vent line on top of tank).

f. Open valve HCV-73 (vent line on syphon-break line).

NOTE: Due to the elevation of the drain valve, this procedure will lower the water level in the decay tank to about 60 in., as indicated on the gauge. To empty the tank completely, the water will have to be pumped out. If only limited draining is necessary, the primary pump and HCV-9 can be used to lower the water level in the decay tank.

5. <u>To Fill the Primary (Shell) Side of the Heat Exchanger</u>

a. Be sure all drain- and vent-line valves are closed.

b. Open valve HCV-54 at the heat exchanger.

c. Open valve HCV-72 in the valve pit (east walkway).

d. Open vent valve HCV-77.

6. <u>To Drain the Primary (Shell) Side of the Heat Exchanger</u>

a. Close valves HCV-72 and HCV-54.

b. Open drain-line valve HCV-76 underneath the heat exchanger. (A hose must be connected to the discharge of this valve to route the water to the storm drain.)

c. Open vent-line valve HCV-77 on top of the heat exchanger.

7. <u>To Fill the Inlet and Exit Lines and the Circulating Pump</u>

a. Fill the lines to the pump inlet and pump exit valves, as described in the above procedures.

b. Close drain-line valves.

c. Open valves HCV-3 and HCV-72.

8. <u>To Drain the Inlet and Exit Lines and the Circulating Pump</u>

a. Close valves HCV-51 and HCV-87.

b. Open the drain-line valve located on the bottom side of the pump.

6.1i. Operation of Skimmer and Nitrogen-16 Jets

A water skimming device, located in the southeast corner of the pool, is used to help keep debris from the surface of the water. Water is drawn from the skimmer bucket by an electrically driven pump and pumped through a filtering unit, located on the west side of the pool, before being returned to the pool. To place the skimmer in service:

1. Position the skimmer bucket slightly below the surface of the water.
2. Open valve A-1 at the inlet to the pump.
3. Close valves A-2, A-4, A-6, A-7, and A-9.
4. Open valves A-5, A-8, A-13, and A-15.
5. Energize the pump motor ("Filter Pump" controls on the south wall of the reactor bay).

NOTE: If sufficient air enters the pump suction line, the pump will be shut off by the pump-discharge pressure switch, which is set at 10 psi. If this occurs, open the vent valve on top of the pump after the pump stops rotating and bleed the air from the pump. Restart the pump temporarily and then allow the pump to stop rotating. Open the vent valve again. (Continue this sequence until the pump continues to operate.)

To help minimize the direct radiation from the surface of the pool due to ^{16}N activity, jets of water are directed across and above the reactor core to delay the surfacing of irradiated water. To place the jets in service:

1. Place the skimmer in operation (the pump is common to both systems).

2. Open valve A-14 and close valve A-15 (located on the west wall of the reactor bay).

To remove the jets from service, open valve A-15 and close valve A-14.

6.1j. Demineralizer Units (Primary and Auxiliary) - Description and Procedures.

In a reactor cooling system, the radioactivity level, the rate of corrosion, and the rate of deposit formation must be closely controlled. At the BSR these objectives are met by demineralizing the cooling water.

All of the components in the reactor cooling loop are made of aluminum or stainless steel. That portion of these materials which dissolves in the water, dissolved gases, and fission products which diffuse through the fuel cladding constitute most of the impurities found in the primary loop. A slight amount of demineralized water is added to the system periodically to supplement that lost through evaporation. It is essential that the primary water have as few impurities as possible since it passes through the high-neutron-flux core region where impurities become highly activated, so some cooling water is continually bypassed through one of the demineralizers to remove trace impurities.

Three checks are available for judging the purity of the water in the reactor system. The first is the radioactivity level measured in disintegrations per minute per milliliter. The second is pH, a measure of the acidity or basicity of the water. The third is the electrical resistance or resistivity of the water. All three parameters are measured once per week. In general practice, the water resistivity and the water activity checks have been the best guides to the effectiveness of a unit and to the need for regneration.

There are two demineralizer units servicing the primary water system. One unit, located in the pump house, is referred to as the primary demineralizer. A second unit, located on the west side of Building 3010, is referred to as the auxiliary demineralizer. The auxiliary demineralizer is normally not in service. The primary demineralizer is, by contrast, normally in service continuously.

With primary flow, part of the water from the heat exchanger, en route to the pool, is pumped through the demineralizer and then returned to the inlet line of the primary pump. Without primary water flow and with the primary-pump exit valve, HCV-9, closed, water taken directly from the pool in the reverse-of-normal cooling flow is pumped through the demineralizer, then it is returned to the inlet line of the primary pump. From the inlet of the primary pump, the demineralized water flows through the decay tank (in reverse-of-normal flow) to the pool.

1. <u>The Primary Demineralizer</u>. - There are two flow paths for the water passing through the primary demineralizer. The path followed depends upon the status of the primary cooling system, i.e., flow or no flow.

   a. Description. - The unit is a dual-bed demineralizer with a rated flow of 30 gpm. The cation unit consists of a PVC (polyvinyl chloride) lined tank (30-in. diam and 72 in. high), containing 14 ft^3 of IR-200 reson. The resin bed is 34 in. high.

      The cation-regenerant tank (24 in. in diam and 36 in. high) has a volume of 1.95 gal per inch of depth.

The anion unit consists of a PVC-lined tank (30 in. in diam and 96 in. high) containing 23 ft^3 of IRA-400 resin. The resin bed is 56 in. high.

The anion-regenerant tank (36-in. diam and 48 in. high) has a volume of 4.4 gal per inch of depth.

b. Procedures. - The unit is to be removed from service and regenerated if the resistivity of the effluent is lower than that of the primary water or if the pH is not within the limits of 5.5 and 6.5. (NOTE: If 42° Be nitric acid is used to regenerate the cation resin, 1.5 carboys will be required for each regeneration; 21.7 gal of 50% sodium hydroxide will be required for each regeneration of the anion resin.)

The following table (Table 6.1.1) includes procedures for removing the demineralizer from service, regenerating the unit, and placing it back in service.

2. <u>The Auxiliary Demineralizer</u>

a. Description. - The auxiliary demineralizer is an Elgin Ultra Deionizer consisting of a mixed-bed column (18 in. in diam and 72 in. high), a regenerant tank (18-in. diam and 18 in. high), a Micro-Klean filter, and auxiliary piping for regenerating. The column has a maximum operating pressure of 100 psig and a maximum flow rate of 18 gpm. The column contains 4.5 ft^3 of Amberlite IRA-400 anion resin and 3.0 ft^3 of Amberlite IR-120 cation resin.

Water to the demineralizer leaves the pool through a 1-in. line on the west wall of the pool and passes through

Table 6.1.1. Procedure for Regenerating the Primary Demineralizer

Objectives	Procedures	Remarks
1. Remove the demineralizer from service.	De-energize the demineralizer pump motor.	The controls are located in a breaker box at the lower left of the breaker panel on the west wall of the pump house.
	Close valve HCV-56.	Valve HCV-56 is located in the inlet line to the pump.
	Close valve HCV-57.	Valve HCV-57 is located on the pump side of the 90° spool piece.
	Close valve HCV-64.	Valve HCV-64 is located on the demineralizer side of the 18-in. spool piece.
	Close valve HCV-65.	Valve HCV-65 is located on the primary side of the 18-in. spool piece.
	Call the Tank Farm operator and obtain permission to send ~3500 gal of liquid waste to the ILW (intermediate level waste) system.	
2. Obtain integrator reading.	Record these date in the BSR log book at the first opportunity.	
3. Remove the spool pieces.	Remove the inlet and exit spool pieces; they are identified by red tape on the flanges. Install the 18-in. spool piece between the inlet line to the demineralizer and valve HCV-58 in the process water line.	This step helps ensure that the regenerant fluids will not be added inadvertently to the reactor water system.

Table 6.1.1 (continued)

Objectives	Procedures	Remarks
4. Close the water-supply valves.	Close valve HCV-59.	This is the water-supply valve to the acid-mix tank.
5. Prepare acid and caustic regenerants.	Open valves 101, 100, and ACV-2 in in the acid-fill system. Observe the increase in the level of the liquid in the mix tank (as indicated by the sight glass). When the liquid level is at the first mark, close valves ACV-2 and 100 in this order.	Valve 101 is in the acid-fill line adjacent to the storage tank. With the liquid at the first mark on the sight glass, the mix tank will contain 22.5 gal of H_2SO_4.
	Position the bottom tip of the Probatrol exactly 5-in. below the surface level of the caustic. (NOTE: Fill the caustic mix tank per step 22 if necessary.)	The Probatrol (a liquid-level sensing device) can be adjusted vertically from 1-in. above the bottom of the caustic mix tank to 6 in. below the top of the tank.
6. Bleed air from the lines and establish the process water flow.	Open valve HCV-58 and establish a flow rate of 8 gpm to the cation column.	
	Open vent valves 1 (on the cation column) and 2 (on the anion column).	
	After all the air has been bled from the column, close valves 1 and 2.	

Table 6.1.1 (continued)

Objectives	Procedures	Remarks
6. (continued)	If the process-water pressure is normal (about 60 psig), open valve HCV-58 all the way after closing vent valves 1 and 2.	The full line pressure (60 psig) is required to operate the pistons of the Cyloflow valves.
7. Place the electrical switches in the proper mode.	Turn the "Acid Suction Valve" switch to AUTOMATIC.	
	Turn the "Caustic Suction Valve" switch to AUTOMATIC.	
	Turn the "Rinse Valve" switch to CLOSE.	
	Turn the "Effluent Valve" switch to CLOSE.	
	Turn the "Standby-Service" switch to SERVICE.	
8. Check the index position of the pilot valves.	Observe the position of the cation pilot valve and the anion pilot valve to be sure that they are in position No. 1.	The valve positions are indicated on the valve-position dial which may be seen through a slot in the valve housing.
10. Perform additional rinsing if required.	If the quality of the effluent is not acceptable (after the 70-min through-flow rinse), additional rinsing may be accomplished by turning the "Rinse Valve" switch to OPEN. In this mode of operation, the rinse will continue until terminated by the operator.	The through-flow fast rinse is presently programmed for 70 min on the timer. After this time, the system will be shut down automatically regardless of the effluent quality.

Table 6.1.1 (continued)

Objectives	Procedures	Remarks
11. Check the position of the pistons in the Cycloflow valve.	If, after a reasonable length of time, the quality of the effluent is not within the resistivity or pH specifications, check the position of the pistons in the Cycloflow valves. They should be as follows:	
	a. For position No. 1 on the pilot valve, pistons 1, 3, and 4 should be on the left side of the Cycloflow valve and piston No. 2 should be on the right.	The numbering system is as follows: looking from the right side of either valve, the No. 1 piston is at the top right and the No. 2 piston is at the top left; the No. 3 piston is at bottom left and the No. 4 piston is at the bottom right.
	b. For position No. 2 on the pilot valve, pistons 1 and 2 should be on the left side of the Cycloflow valve and pistons 3 and 4 should be on the right side.	
	c. For position No. 3 on the pilot valve, pistons 1 and 3 should be on the right side of the Cycloflow valve and pistons 2 and 4 should be on the left side.	

Table 6.1.1 (continued)

Objectives	Procedures	Remarks
11. (continued)	d. For position No. 4 on the pilot valve, pistons 1 and 4 should be on the left side of the Cycloflow valve and pistons 2 and 3 should be on the right side.	
12. Prepare to return the system to service.	Close valve HCV-58 (process water). Turn the "Standby Service" switch to SERVICE.	
	Turn the "Rinse Valve" switch to CLOSE.	
	Turn the "Acid Suction" switch to CLOSE.	
	Turn the "Caustic Suction" switch to CLOSE.	
	Close valve HCV-60.	This valve is located in the line to the acid eductor.
	Close valve HCV-78.	This valve is located below the solenoid valve in the acid-suction line.
	Close valve HCV-62.	This valve is located in the line to the caustic eductor.

Table 6.1.1 (continued)

Objectives	Procedures	Remarks
12. (continued)	Close valve HCV-61.	This valve is located below the solenoid valve on the caustic-suction line.
	Close valve HCV-59.	This valve is located in the water-supply line to the acid-mix tank.
	Close valve HCV-63.	This valve is located in the water-supply line to the caustic-mix tank.
13. Replace the spool pieces.	Remove the 18-in. spool piece from between valve HCV-58 and the inlet line to the demineralizer and install it between valves HCV-64 and HCV-65.	
	Install the 90° spool piece between valve HCV-57 and the inlet to the demineralizer.	
14. Check the position of the pilot valve.	Observe the index positions on the pilot valves to be sure that they are in the No. 1 position.	
15. Continue preparations for placing the system in service.	Open valve HCV-56 (inlet to the demineralizer).	
	Open valve HCV-57.	This valve is located on the pump side of the 90° spool piece.

Table 6.1.1 (continued)

Objectives	Procedures	Remarks
15. (continued)	Open valve HCV-64.	This valve is located on the demineralizer side of the 18-in. spool piece.
	Turn the "Effluent Valve" switch to AUTOMATIC.	
	Energize the demineralizer pump motor.	The controls are located at a breaker box at the lower left of the breaker panel on the west wall of the pump house.
16. Bleed air from the columns.	Open valves V-1 and V-2 until all the air has been bled from the columns, then close the valves.	
17. Clear the "High Conductivity" alarm if required.	If the "High Conductivity" alarm is actuated, turn the "Effluent Valve" switch to OPEN.	The "High Conductivity" alarm is located at the pump house.
18. Purge air from the sample line and check the pH.	Open the sampling valve in the exit line and allow a 5-min purge of trapped air.	
	Obtain a water sample and measure the pH.	This check should determine if any regenerant has leaked through the effluent valve. (NOTE: Water may be allowed to drain onto the floor.)

Table 6.1.1 (continued)

Objectives	Procedures	Remarks
18. (continued)		If the quality of the effluent is acceptable, proceed to the next step. If it is not, the primary side of the 18-in. spool piece should be loosened to allow a clean-up of the line.
	Tighten the flange.	
	Close the ILW valve, HCV-91.	
19. Place the system in service.	Open valve HCV-65 until a flow-rate of 20 gpm has been established through the demineralizer system. Final adjustment of valve HCV-65 will be made the first subsequent time that primary flow is established.	The final adjustment should be such that flow from the sample line can be obtained (this flow-rate will be about 26-27 gpm). This will prevent a negative pressure on the anion tank.
20. Record the integrator reading.	When convenient, record this data in the BSR log book.	
21. Actuate the automatic service valve.	Turn the "Effluent Valve" switch to AUTOMATIC. When the conductivity alarm is initiated, the effluent valve will close automatically.	This must be performed before leaving the pump house. This valve is a safety device to prevent poor quality water from entering the primary water system.

Table 6.1.1 (continued)

Objectives	Procedures	Remarks
22. Fill the caustic-mix tank.	Connect the hose (provided) from the outlet connection on the caustic-tank truck to the connection at valve 97.	The caustic-mix tank, formerly used only as a mix tank, is now used as well. The tank has a capacity of 132 gal (when the level of the liquid is 1 in. below the overflow). The tank will normally require filling only once a year.
	Open valve 97 and the truck's dump-line valve.	
	Close valve 99.	
	Open valve 98.	
	Energize the caustic pump.	
	Observe the level of the liquid in the mix tank; when the level is 1 in. below the overflow line (on the mix tank), de-energize the pump.	
	Close valves 98 and 97 and the truck's dump-line valve. Reconnect the truck end of the unloading hose to the storm drain line.	
	Open valve 97.	

Table 6.1.1 (continued)

Objectives	Procedures	Remarks
22. (continued)	Connect the water hose from the process water line to the line at valve 99. Rine the pump and caustic line with process water for about 10 min.	

valve B-1 prior to entry into the pump. The Tri-Clover pump forces the water through the mixed-bed column and the filter and returns it to the pool.

b. Procedure for Regnerating the Resins. - The unit is to be removed from service and regenerated if the resistivity of the effluent is not more than that of the pool water or if the pH is not within the limits of 5.5 and 6.5.

The following table (Table 6.1.2) includes procedures for removing the demineralizer from service, regenerating the unit, and placing it back in service.

6.1k. Filtering Beds - Description and Procedures

There are three filter beds servicing the primary water system. Two of the beds, located on the west side of the reactor bay, are referred to as the skimmer filters. The third bed, located in the pump house, is referred to as the primary filter bed.

1. Skimmer Filter Beds

a. Description. - The two skimmer filter beds are installed in series. The first, a Dollinger Staynew Liquid filter, uses W-12 wool-felt filters with bronze backup wire as a filter media. The second, a Ful Flow filter, uses 78 Cuno Micro-Klean filter cartridges as a filter media. The filters should be changed when the pressure drop is 20 psig through the unit.

b. Procedure for Replacing the Dollinger Staynew Liquid Filter Media

(1) After de-energizing the pump motor, isolate the filters by closing valves A-8 and A-13.

Table 6.1.2. Procedure for Regenerating the Auxiliary Demineralizer

Objectives	Procedures	Remarks
1. Remove the demineralizer from service.	De-energize the pump. Close valves B-1, B-2, B-3, and B-7.* Close valves 1 and 3 in the demineralizer room.	The electrical switch is located in the reactor bay, over the demineralizer pump.
2. Remove the spool pieces.	Remove the inlet and exit spool pieces.	The spool pieces are painted red for identification. The spool piece on the inlet line is located on the suction side of the pump. The spool piece on the exit line is in the demineralizer room. This step assures that regenerant fluids cannot be inadvertently added to the reactor water system.
3. Backwash the resin to remove foreign matter and prepare the resin for a more efficient regeneration.	Open valves C-4, C-5, and C-6. Open valve 5. Slowly adjust backwash supply valve 2 until the backwash flow-rate is about 7 gpm. Continue the backwash for at least 10 min. then close all valves.	These valves are the process-water supply valves. Be careful not to wash any course-grain resin from the columns.

*Normally these valves are closed since this unit is in standby.

Table 6.1.2 (continued)

Objectives	Procedures	Remarks
4. Prepare the caustic regenerant.	Add 8 in. of water to the regenerant tank via valve 12. While stirring the water in the regenerant tank, slowly add 3.5 gal of 50% NaOH and continue stirring until the caustic is thoroughly mixed.	Caution: Remember that the caustic is a hazardous chemical if handled improperly. Wear rubber gloves, shoe covers, face shield, and a rubber apron while preparing the regenerant solution.
5. Regenerate the anion resin.	Open valves 4 and 7. Adjust the regenerant flow-rate to 1.8 gpm by throttling with valve 11.	
	Open valve 6 and allow the regenerant to be drawn into the resin column at a rate of 0.5 in./min.	If the regenerant is not being drawn into the column or if the water backs up in the regenerant tank, increase the flow-rate by opening valve 11 until the regenerant is being drawn at a rate of 0.5 in./min.
	As soon as the regenerant is all drawn in, open valve 12 and 3 in. of water to the regenerant tank.	If the regenerant is being drawn too fast, throttle it with valve 6.
6. Rinse with demineralized water.	Change from process water to demineralized water for the rinsing step by opening valve C-3 and closing valves C-4 and C-5 and all valves at the demineralizer.	

Table 6.1.2 (continued)

Objectives	Procedures	Remarks
6. (continued)	Move the right-hand switch of the "Quality Indicator" from its normal SERVICE position to the RINSE position.	
	Open valve 4. Adjust the rinse flow-rate to about 7 gpm by manipulating valve 1. Rinse the column for 50 min. The pH should then be between 8 and 8.5.	
7. Prepare the acid regenerant solution.	Add 10 in. of water to the regenerant tank via valve 12, then close the valve. While stirring the water, carefully add 2 1/2 nine-pound bottles of sulphuric acid and continue stirring until thoroughly mixed. Close valve 7.	Caution: Remember that the acid is a dangerous chemical if handled improperly. Wear rubber gloves, shoe covers, face shield, and a rubber apron while preparing the regenerant solution.
8. Regenerate the cation resin.	Open valve 8. Using valve 11, regulate the flow-rate to 1.8 gpm as indicated on the rotometer.	If the regenerant is not being drawn into the column or if the water backs up in the tank, increase the flow-rate by opening valve 11 until 0.5 in/min is attained.
	Open valve 6 to allow the regenerant to be drawn into the column at a rate of 0.5 in./min.	
	When the regenerant is 1/2 in. from the bottom of the tank, add 3 in. of water by opening valve 12.	If the regenerant addition rate is too great, regulate it with valve 6.

Table 6.1.2 (continued)

Objectives	Procedures	Remarks
8. (continued)	Close valve 12.	
	After the regenerant is all drawn in, close all valves.	
9. Rinse with demineralized water.	Open valve 4. Adjust the rinse flow-rate to about 7 gpm by manipulating valve 1.	
	Rinse until the pH is 3.8 to 4.	Normally this step requires about 2 hrs.
10. Mix the resins.	Change the switch on the "Quality Indicator" from the RINSE to the SERVICE position.	The "Quality Indicator" is located on the west wall of the pool area.
	Open valve 9 to allow water to drain from the column (for about 10 min or until the water at the drain stops flowing).	
	Close valve 4.	
	Open valve 5.	
	Adjust valve 2 until the flow indicator shows a water-mixing rate of 5 gpm.	
	Open valve 10.	

Table 6.1.2 (continued)

Objectives	Procedures	Remarks
10. (continued)	Adjust valve 13 until the air rate on the flow indicator shows an air-mixing flow-rate of 2.5 ft^3/in.	
	When water appears at the drain, close valves 13, 10, 5, and 2 (in the order listed).	
	Open valve 1 to allow the unit to refill with water.	
	When the water starts flowing steadily at the drain, close valve 9.	
	Open valve 4.	
	Rinse until the resistivity of the demineralizer effluent is greater than the resistivity of the pool primary water.	Normally, this step requires about 2 hrs.
11. Place the unit in service.	Close valve 4 and replace the spool pieces.	NOTE: The flow-rate should be about 18 gpm.
	Close valves C-3 and C-6.	
	Open valves B-1, B-2, and B-7.	
	Open valves 1 and 3.	
	Energize the pump.	

(2) Open valves A-10, A-11, and A-12. This will drain both filters.

(3) Remove the filter access cover and remove the nut which secures the insert assembly. Install the lifting bar on top of the insert assembly and, using the crane, carefully lift the insert assembly from the tank. The insert assembly should be covered with a plastic bag as the assembly is being removed from the tank (to contain any contamination that may be present). The entire operation should be performed in a "contamination zone" and a Health Physics representative should be present during initial removal of the assmbly. Remove the four tie rods from the upper and lower radial-pin-insert assemblies and dispose of the filter media and gaskets. Wash the radial-pin inserts and install new filter media slip-on inserts and gaskets. To re-assemble the unit, use the same procedure in reverse order.

c. Procedure for Replacing the Ful Flow Filter Media. - Remove the filter access cover and dispose of the spent filter cartridges. As in the operation described above, this work will be performed in a contamination zone with a Health Physics representative present during the removal of the first cartridge. Install 78 new Cuno Micro-Klean filter cartridges. To re-assemble the unit, use the same procedure in reverse order.

2. Description of the Primary Filter Bed

a. Description. - The primary filter bed is a Purolater Products type PAGR-200V (modified). This unit is 18-in. OD and 24 7/8 in. high. The bed uses eight 4-in.-OD and 12-in.-high Micronic 5-micron cartridges as the filter media. When the filters are clean, the pressure drop across the filter bed is 3 psi with a flow-rate of 200 gpm.

b. Procedure for Replacing the Purolator Filter Media. - Close valves HCV-52 and HCV-53 to isolate the bed. Depressurize the bed by opening the vent valve on the top. (If it is necessary to drain the bed, the pipe plug on the bottom must be removed.) Remove the top head and dispose of the spent filter cartridges. This work will be performed in a contamination zone with a Health Physics representative present during the removal of the first cartridge.

6.11. Routine Checks

In order to maintain proper surveillance over the various components throughout the reactor complex, the roving operator is to inspect the area and perform all the checks listed on the checklist for that particular shift. These checks are to be performed at the beginning of each shift; the area is to be inspected again during the middle of each shift for proper operating conditions. See Section 12 for the specific items to be checked by each shift. The individual items related to the primary water which are on the shift checklist are self-explanatory.

6.2. The Secondary-Water Cooling System

6.2a. References

1. P 20310 EC 001, Cooling Water System - Flow Sheet
2. P 20310 EC 023, Plan of Secondary Underground Lines from Heat Exchanger to and from Cooling Tower
3. P 20310 EC 027, Pump Sump and Cooling Tower Piping - Plan
4. P 20310 EC 028, Pump Sump and Cooling Tower Piping - Section
5. P 20310 EC 031, Heat Exchanger Piping - Plan
6. P 20310 EC 032, Heat Exchanger Piping - Sections Sheet 1
7. P 20310 EC 033, Heat Exchanger Piping - Sections Sheet 2
8. S 20310 EA 014, Cooling Tower Basin- Plan, Sections, and Details
9. S 20310 PF 003, Cooling Tower Acid Storage Tank--Acid Storage Tank, Location, Plan and Sections, Safety Shower Pad, and Piping Details
10. P 20310 PF 004, Cooling Tower Acid Storage Tank -- Piping Plan, Sections and Details

6.2b. Introduction

The secondary water system consists basically of an induced-draft cooling tower, a pump, the tube side of a stainless steel heat exchanger, and the piping necessary to convey the water. The secondary loop is equipped with an automatic temperature-control system. Auxiliary systems serve to treat the process water with various chemicals to prevent corrosion, scaling, and accumulation of microorganisms.

6.2c. Description

Water, from the approximately 40,000-gal-capacity cooling-tower basin, is pumped through metal strainers, through the tube side of the

stainless steel heat exchanger, through an automatically controlled valve, and through the cooling tower. The flow-rate of the secondary water is varied by the action of the automatically controlled valve. Action of this valve and variation of the cooling tower fan speed are used to control and maintain the temperature of the primary water at 95°F (leaving the heat exchanger). The process water lost due to evaporation and due to tower blowdown is automatically replaced at the tower basin.

The rated capacity of the cooling tower is 5 Mw. A portion of the 3-Mw-excess capacity is used to provide cooling water for air-conditioning units Nos. 5, 6, and 7 in the laboratories and offices on the first and second floors east of the reactor bay. A separate pump (with a full-flow rating of 220 gpm) is used to provide secondary cooling water to these units. This pump necessarily operates all during the year since these air-conditioning units provide heating during the cooler months. It is sometimes desirable, during freezing weather, to byapss the tower when only the air-conditioning pump is operating. Water from the air-conditioning units is then routed through HCV-94 directly to the tower basin. Use of this flow-path prevents the accumulation of ice on the tower under such conditions. (NOTE: For detailed description of the cooling tower, see Section 6.3, "The Cooling Tower".)

6.2d. General Precuations

1. Be sure that the sump is filled and that automatic-water-supply valve LV-20 is operable and valve HCV-81 is opened before operating the system.

2. Maintain the chemical-concentration parameters within specified limits.
3. Follow the instructions in the section concerning hazards involved in handling the chemicals used for treating the secondary water.
4. Avoid permitting excessive accumulation of ice on the tower during the winter months.

6.2e. Operational Procedures

Normally, when Mode-2 operation is selected, the duration of operation at significant power levels will require placing the secondary cooling system in service. The procedure for accomplishing this is as follows:

1. Assure that the system is filled, vented, and ready for service.
2. Place the fans in AUTOMATIC; the controls are located on the west wall of the pump house. Select the fans to be operated; normally, both fans will be selected.
3. Observe the temperature increase indicated by the recorder readout in the control room.
4. When the temperature of the primary water leaving the heat exchanger reaches about 105°F, place the control-selector lever of the recorder-controller in MANUAL (see Figure 6.2.1).
5. Move the demand setpoint to request 13 to 14 psi of air pressure on the secondary throttle valve; this will cause the control valve to be partially open. (The black-colored air-pressure indicator should move to align itself with the demand knob.)
6. When the valve is about 80% closed (black indicator at about

Figure 6.2.1. Reactor Inlet Water Temperature Controller

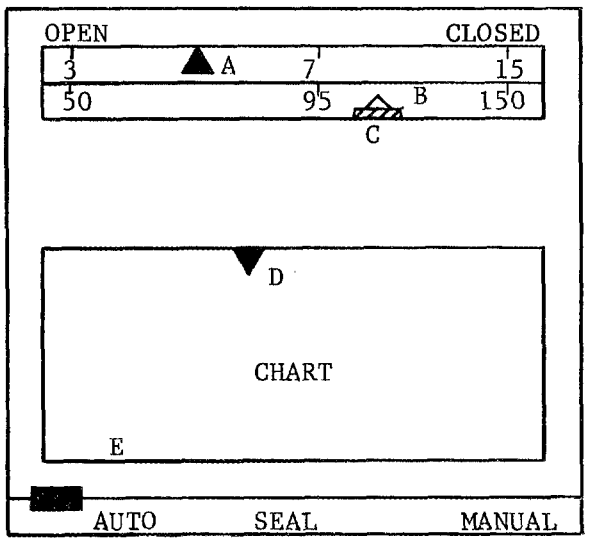

A - This black pointer indicates the output air pressure of the pneumatic transmitter. As the air pressure increases, the secondary valve closes.

B - The "Demand-Setpoint" pointer indicates the preferred temperature of the water returning to the pool when the control-selector lever is in the AUTO position and indicates the desired valve-operator pressure when the control selector lever is in the MANUAL position.

C - The demand-setpoint knob is used to set the demand-setpoint pointer.

D - This pointer indicates the actual temperature of the water leaving the primary side of the heat exchanger.

E - Control-selector lever.

13 or 14 psi), energize the secondary pump motor using the panel control knob. This action should minimize surges in the water flow. The panel pump-motor indicator light should be ON and the secondary flow recorder should indicate flow.

7. Continue to adjust the demand setpoint knob until the temperature stabilizes at approximately 95°F.

8. Place the control-selector lever in SEAL. This fixes the air pressure at the valve operator at the previously demanded pressure.

9. Place the control-selector lever in AUTOMATIC. (NOTE: Due to the time delays in the instrumentation associated with the temperature-control system, it is not particularly desirable to place the control-selector lever in AUTOMATIC and energize the pump indiscriminately. The result, in all probability, could be excessive oscillations in temperature and surges in the water flow. The above procedure is intended to minimize these effects.)

The secondary flow-rate will increase and decrease to compensate for any increases or decreases of tower basin temperature; this is necessary to continue removing heat from the heat exchanger at a constant rate.

The secondary flow-rate is the parameter which is used to control operation of the cooling tower fans. The sequence of operation of this system is indicated in Table 6.2.1.

The rate of flow of the secondary water to the cooling tower is monitored just downstream from the heat exchanger by FE-11, which is a

Table 6.2.1. Fan Speed Control

Switch*	Change of Flow-Rate	Fan Speed
FS-11F	Increase to 1200 gpm	South in low
FS-11D	Increase to 1250 gpm	North in low
FS-11E	Increase to 1390 gpm	South in high
FS-11C	Increase to 1410 gpm	North in high
FS-11C	Decrease to 1250 gpm	North in low
FS-11E	Decrease to 1200 gpm	South in low
FS-11D	Decrease to 1040 gpm	North, off
FS-11F	Decrease to 1000 gpm	South, off

*These are differential-type pressure switches with an adjustable low-pressure setpoint and with an adjustable span used to determine the high-pressure setpoint.

1/8-in.-thick orifice plate with a 6.3343-in.-diam bore. The secondary-flow transmitter, FT-11, transmits a pneumatic signal to flow-indicator FI-11 at the pump house and to FR-11, TR-15 (a two-pen recorder) located in the control room. An associated pressure switch, FS-11A, will sound an annunciator if the flow decreases to <300 gpm. The flow-rate is controlled by the position of the throttle valve, TCV-13; the position of this valve is adjusted by the pool-inlet-temperature controller (TC-13).

6.2f. Chemical Conditioning of the Tower Water

1. Objectives. - To help maintain an efficient secondary cooling system it is necessary to treat the process water used in the system with various chemicals. The main objectives of the treatment are as follows:

a. Th control scale formation and corrosion.

b. To control microbiological growth.

c. To control the pH of the secondary water.

The reasons for attempting to control scale formation and corrosion are rather obvious. Both cause a loss of heat-transfer capability; scaling can seriously affect flow rates, and corrosion, if unchecked, will eventually result in a leaky, possibly unsafe and unusable system.

The reasons for attempting to control microbiological growths are to minimize heat-transfer losses and deterioration of the wood. The wetted wooden portions of the cooling tower are redwood, which resists deterioration; however, it is still subject to attack by chemical agents and fungi.

Chemical attack on tower lumber is a form of deterioration in which oxidizing agents, such as chlorine, and alkalies attack lignin and remove materials, naturally present, which are toxic to wood-destroying organisms; this can cause very serious damage. Chemical treatment is designed to minimize this deterioration although it cannot be eliminated completely.

Evidence of chemical attack (delignification) can probably be found during the earliest stages of development in the most heavily wetted and washed portions of the tower wood.

Fungus attack may be described as the decomposition of wood by microorganisms. These microorganisms utilize wood as food. They are ever present in decaying wood in the forest, and their spores are easily blown by the wind into the cooling tower.

Fungus attack can be classed as white rot, brown rot, and soft rot. White rot decomposes all components of the wood lignin and cellulose.

Look for a spongy, stringy condition of the wood and pockets of white or yellow fibrous material. Brown rot decomposes the cellulose, leaving the lignin more or less unaffected. The wood is reduced to a brown mass which powders easily in the fingers. Both white and brown rots usually leave the surface intact and it is necessary to probe beneath the surface of the wood to detect their presence. These fungi are usually found in the nonflooded zones of the tower.

Soft rot usually takes place in the flooded zones. Attack starts on the surface and progresses inward. It is identified by loosening of surface fibers, eroded surface, and loss of strength. Surface checks across the grain are frequently visible after the wood has dried.

Samples of fill and drift eliminator both should be broken and the interior examined for a darkening in color. The manner in which the wood breaks should be noted--infected woods tend to break straight across the grain with little or no splintering.

Although damage to wooden components by microorganisms is fairly obvious, damage to metal components is not; however, certain organisms of the sulfate-reducing type generate corrosive hydrogen sulfide which causes severe pitting attack. In addition, slime can accelerate corrosion by depositing on metal surfaces and preventing protective film formation. Biological fouling on metal surfaces will also create differential oxygen concentration cells and result in serious pitting of the surface. Other sources of difficulty are the iron-depositing categories of bacteria. Those bacteria have the capacity to absorb and to accumulate iron and/or manganese when they are present in environments which contain these elements. Later, these organisms deposit iron and manganese salts around their cells.

An attempt is made to control the pH of the secondary water in order to protect the metal portion of the system. The solids in the process water fed to the basin are concentrated because of the high evaporation rate. This tends to raise the pH primarily due to the increased concentration of calcium carbonate ($CaCO_3$). A high pH is deleterious to the wood in the tower, so sulphuric acid is fed into the water to maintain the acidity at a level at which the chemicals used to control the corrosion and biological growth are most effective. However, this acid addition must be very carefully controlled since an excessive amount of acid would be very harmful to the metallic components of the system.

2. Treatment for Scale Formation and Corrosion. - Nalco 390 is used to inhibit scale formation, corrosion, and fouling of the components in the secondary system (refer to Section 6.2g for handling procedures). The Nalco 390 content is maintained at 50 ppm as determined by a specific analysis procedure. The rate of addition necessary to maintain the desired concentration will vary widely, depending upon weather conditions, heat load on the tower, and other variables.

3. Treatment for Microbiological Growth. - Nalco 207 and Nalco 21-S are used to inhibit the growth of microorganisms in the secondary water (refer to Section 6.2g for handling procedures). These chemicals are added as needed. The quantities added and the frequency of addition are based on careful observation of the condition of the tower and on bacteria counts of samples of the secondary water taken periodically.

4. pH Control.- The pH probe, ApHE-14, is located at the cooling tower. Water is supplied to the probe from the discharge of the air-conditioning pump; after passing over the probe, the water is returned to the basin sump. The probe transmits an electrical signal to the pH amplifier-indicator (ApHT), which in turn transmits an electrican signal to the recorder-controller (ApH R-14, ApH C-14) in the control room. The controller transmits a variable current signal to the motor controller, ApH CO-14, located at the pump house. The motor controller transmits a proportional DC-voltage signal to the motor of the Minipump which feeds sulphuric acid to the cooling tower basin. An adjustable alarm contact on the recorder, ApH R-14, will sound an annunciator if the pH increases to 8.2.

6.2g. Procedures for Handling Hazardous Chemicals

As described in previous sections, Nalco 390, Nalco 207, Nalco 21-S, and sulphuric acid are used to treat the reactor secondary water system for various reasons. Since it is realized that four chemicals are potential safety hazards if they are not handled properly, a brief description of the toxicology and disaster hazards for these chemicals is listed below followed by the recommended safe-operating practices.

1. Nalco 21-S

a. Description and Purpose. - This blend of chemicals consists of chlorinated phenols with dispersants furnished in ball-briquette or pellet form. The high solubility of the blend assures thorough diffusion of chemicals into slime masses surrounding bacteria. It is effective against a wide variety of bacteria and is a general purpose treatment for

control of slime and microbiological growths. Use of this blend constitutes a treatment with nonoxidizing characteristics for the prevention of wood rot in the cooling tower. (NOTE: Each 21-S ball weighs 16 oz; addition of one ball increases the total solid by ~2.8 ppm.)

b. Handling. - Nalco 21S may be irritating to the skin and eyes. Avoid contact with the skin, eyes, and clothing; avoid breathing the dust or solution spray. Do not take internally.

c. Disaster Hazards. - Chlorinated phenols, in general, are dangerous when hetaed; when heated to decomposition, they emit highly toxic fumes. (Normally, Nalco 21-S does not deteriorate during storage.)

d. Counter Measures. - In case of external contact, immediately flush the skin or eyes with large amounts of water for at least 15 min; also get medical attention. (Remove and wash chemically contaminated clothing before re-use.) If ingested, do not induce vomiting but use "Universal Antidote" and notify the Medical Division.

2. <u>Nalco 207</u>

a. Description and Purpose. - This blend of chemicals consists of bis thiocyanate with dispersants and a stablizer in ball-briquette form. This blend will prevent microbial deposits by providing economical control of bacteria and fungi. (NOTE: Each 207 ball weighs 17 oz; addition of one ball increases the total solids by ~3.0 ppm.)

b. Handling. - Nalco 207 is irritating to the skin and eyes. Absorption through the skin is harmful; it is harmful if swallowed. Do not get it in the eyes or on the skin or clothing. Wear goggles or a face shield and rubber gloves when handling Nalco 207.

c. Disaster Hazards. - Thiocyanates in general are dangerous when heated; when heated to decomposition or on contact with acid or acid fumes, they emit highly toxic fumes of cyanides.

d. Counter Measures. - In case of external contact, immediately wash the skin with plenty of soap and water for at least 15 min; for the eyes, immediately flush with large amounts of water for at least 15 min and get medical attention. (Remove and wash chemically contaminated clothing before re-use.) If ingested, induce vomiting and notify the Medical Division.

3. Nalco 390

a. Description and Purpose. - This blend of chemicals consists of modified natural and synthetic organics and of inorganic zinc. It is a combination corrosion inhibitor and antifoulant. (This blend does not contain either chromates or phosphates.) As a corrosion inhibitor, Nalco 390 forms a thin protective film on metal surfaces; this tightly bonded cathodic film prevents pitting attack. As an antifoulant, this blend controls troublesome ions and dispresses sludge or insoluble matter; the chemical blend itself will not

contribute to fouling. (NOTE: Each 390 Nalco ball weighs 15 oz; addition of one ball increases the total solids and the 390 concentration by ~2.6 ppm.)

b. Handling. - In the handling of Nalco 390, care should be exercised to prevent eye and nose contact with the dust. Avoid prolonged or repeated skin contact; do not take internally. Store Nalco 390 in a dry location. This material does not deteriorate with age.

c. Counter Measures. - In case of external contact, wash the skin thoroughly with soap and water. If ingested, induce vomiting and notify the Medical Division.

4. Sulphuric Acid

a. Description and Purpose. - Sulphuric acid, a commonly used industrial chemical, is used to control the pH of the secondary cooling water.

b. Handling. - In handling sulphuric acid, care should be exercised to prevent eye and nose contact with the vapor. The handler should wear gloves and a plastic face shield.

c. Toxicology. - In concentrated form, sulphuric acid acts as a powerful caustic to the skin, destroying the epidermis, and penetrating to the underlying tissue. This causes great pain and, if much of the skin is involved, is accompained by shock, collapse, and symptoms similar to those experienced in severe burns. The fumes cause coughing and irritation in the mucous membranes of the eyes and upper respiratory tract.

d. Disaster Hazards. - Dangerous--when heated, it emits highly toxic fumes.

e. Counter Measurements. - In all cases of contact in any form, immediately give prolonged applications of running water to wash the material from the body. If the eyes are involved, they should be irrigated immediately with copious quantities of water for at least 15 min. If swallowed, do not induce vomiting. If the patient is conscious, have him wash out his mouth with water and drink as much water as possible (milk is preferable but is not as readily available).

5. General

a. Transporting. - When loading, transporting, and/or unloading toxic or corrosive materials, handle the containers carefully to avoid possible damage and subsequent leakage. Protective clothing should also be utilized. If a leaky container is discovered, report it immediately to the shift engineer. Normally, flushing the spilled chemical with water to a floor drain will be the proper corrective action.

b. Storage. - The fiber drums containing Nalco 21-S and the multiwall paper bags containing Nalco 207 and 390 should be stored in a cool, dry, and ventilated area. These containers should not be stored near steam pipes or other sources of heat.

In general, concentrated acids react with moisture to evolve heat; consequently, the sulphuric acid should also be stored in a cool, dry, ventilated area.

6.2h. Filling and Draining the Tower Basin and Secondary System

1. Filling the Tower Basin and Secondary System. - To fill the tower basin with process water, open valve HCV-66 located on the west side of the tower; ensure that HCV-81 is open. Use the long T-handle tool provided. After the basin is filled, close valve HCV-66. Normal make-up water is supplied automatically through valve LV-20, provided that HCV-81 is open. (NOTE: Be sure that drain valves HCV-79 and HCV-80 are closed before filling the system.)

   To fill the secondary-system piping and heat-exchanger tubes, energize the secondary pump motor and open valve TCV-13. (NOTE: TCV-13 is operated from the control room.) The secondary system will vent through the cooling tower whenever secondary flow is established.

2. Draining the Tower Basin and Secondary System. - To drain the sump, open valve HCV-79 after ensuring that HCV-66 and HCV-81 are closed. Also ensure that TCV-13 is closed. (NOTE: TCV-13 is operated from the control room.)

   To drain the secondary-system piping and heat-exchanger tubes, connect a hose from the discharge side of HCV-89 to the floor drain. Ensure that the secondary pump motor is de-energized and tagged. Close TCV-13 and open HCV-89. (HCV-89 is a 1 1/2-in. gate valve connected to the inlet line on the secondary side of the heat exchanger.) Open vent valve HCV-90 or HCV-91.

6.2i. De-icing the Cooling Towers

During freezing weather, ice may accumulate on the tower fill and on the distribution pans to the extent that the structure may be unable to support the weight. To enusre that breakage does not occur, there should be frequent checks of the area when the temperature drops below freezing, and the tower should be de-iced as often as necessary.

To de-ice the tower, operate the fans in "reverse". The procedure is as follows:

1. Turn the fan "mode" switches to MANUAL. (The two "mode" switches are mounted in aluminum box located on the west wall of the pump house; normally, both switches would be in the AUTOMATIC position.
2. Depress both "Off" buttons for the cooling tower fans; these buttons are located in the panel west of the cooling tower.
3. After the fans have stopped, turn both of the "Forward-Reverse" switches to the REVERSE position. (NOTE: These switches are located in the panel west of the cooling tower. There is a 3-min delay before the fans will start in the reverse mode.)
4. After the ice has melted, depress the "Stop" button; these buttons are located in the panel west of the cooling tower.
5. After the fans have stopped, turn the "Forward-Reverse" switches to the FORWARD position.
6. Place the switches mentioned in Item 1 in the AUTOMATIC position.

6.2j. Routine Checks

In order to maintain proper surveillance over the various components throughout the reactor complex, the roving operator is to inspect the

area and perform all checks listed on the checklist for that particular shift; the area is to be inspected again during the middle of the shift for proper operating conditions. (See Section 12 for the specific items to be checked by each shift.) The individual items related to the primary water systems are self-explanatory.

6.2k. Special Chemical Procedures

1. Procedures for the Nalco 390 Titration Test

   a. Take a 50-ml sample of the secondary water.

   b. Add 2.5 ml of Nalco 390-T1 to the sample.

   c. Add 1/4 ml of Nalco 390-T2 to the sample solution.

   d. Add 50 ml of Nalco 390-T3 to the sample solution.

   e. While stirring the sample solution, add the "prepared solution" until a strong pink color develops.

   f. Start the titration using Nalco 390-T5 solution. The color of the sample solution will change from a strong pink to a grey-blue. The number of milliliters of Nalco 390-T5 solution required to produce the last color change is an indicator of the concentration (in ppm) of Nalco 390.

   (Concentration of Nalco 390) in ppm = (ml of Nalco 390-T5) x 20 + 15

2. Procedure for Preparing the "Prepared Solution" used in Section 6.2h.1. - Fill the small bottle (that is presently being used) with Nalco 390-T4A. Then add ~1/4 scoop of Nalco 390-T4. Shake the solution and immediately a dark-blue color will develop.

(NOTE: Nalco 390-T4A solution is received in a pint-sized brown bottle; Nalco 390-T4 is received in a small jar and is in a damp powder state.)

6.3. The Cooling Tower

6.3a. Description of Tower Components

To aid in the proper inspection of the cooling tower, the various components, their purposes, and the method of operation will be briefly discussed. These items should be familiar to everyone inspecting the secondary system.

Before discussing each component, the relationship of the components to each other should be established. For each fan, power is supplied by the motor to the Flexdyne coupling which is, in turn, connected to the jack shaft. The jack shaft drives the speed reducer via the drive shaft. The fan hub assembly (to which the fan blades are connected) is turned by the speed reducer.

1. Speed Reducer. - The speed reducer is the heart of the tower. It receives power from the high-speed motor, reduces the speed, and increases the torque to drive the fan blades. It is subject to extreme service wear and warrants careful attention and maintenance.

   The power-input shaft is held in place within the pinion cage by a set of roller bearings. The output shaft, or fan shaft, is perpendicular to the input shaft and is also held in place by roller bearings. Spiral bevel gears within the reducer change the direction and reduce the speed of rotation.

   Wear develops first in the shaft bearings, both pinion and axle, resulting in loose shafts. Wear can also develop between the gears, resulting in excessive backlash..

As a preliminary check on the condition of the speed reducer:

a. Try to move the pinion shaft up and down or sideways (movement indicates pinion-bearing wear).

b. Try to move a fan blade up and down (excessive movement indicates fan-shaft-bearing wear).

c. Hold the fan still and rock the drive shaft back and forth (a check for indicating backlash).

If excessive movement is noted at any point, have the drive shaft disconnected and see if the pinion shaft can be moved in and out of the pinion cage. The pinion shaft bearings are set to slightly preload the roller bearings; therefore, any movement of the pinion shaft indicates wear of the roller bearings. If movement is detected, the bearings should be removed for inspection and replaced if damaged or severely worn.

The bearings on the fan shaft can be checked for wear by moving a fan blade up and down and observing the movement of the fan shaft with reference to the top of the speed-reducer casting. Relative movement of this shaft should be slight. Any excessive movement indicates that the speed reducer should be opened and the shaft bearings inspected.

Excessive gear wear can be determined by the degree of backlash or movement of one of the shafts with the other shaft locked. Too much backlash indicates wear of the gear teeth and bearings. These should be inspected and replaced if necessary.

The speed reducer must operate as a unit. Excessive wear or vibration at any one point may impose loads on other parts which lead to their failure. Therefore, the entire unit should be inspected frequently and kept well adjusted.

Due to the severe atmospheric conditions encountered at the top of a cooling tower, it is easy for moisture to contaminate the gear-reducer lubricant. Any time this oil becomes contaminated it must be drained, the case flushed out, and the lubricant properly replaced. Two types of contamination may be present--sludge and water condensation.

To check for condensation, heat a metal plate to between 300° and 350°F and place a few drops of gear-reducer oil on it. If the oil boils and foams, it indicates the presence of water. If it merely spreads out and smokes, there is no water present.

If either sludge or moisture are found in the lubricant, it must be drained, the case must be flushed out with flushing oil, and the case refilled with clean oil.

2. Drive Shafts. - The drive shaft connects the jack shaft to the speed reducer in the center of the fan cylinder. At the ends of the drive shaft four bonded rubber bushings are used to provide a flexible connection both to the jack shaft and to the gear reducer. However, the drive shaft is still the major source of vibration in the mechanical equipment. Excessive vibration, whether detected during routine daily checks or during special inspections, is cause for shutting the fan down to permit checks of the alignment and balance of the drive shaft.

Inspection of the complete drive shaft should be made every six months. Look for checking or cracking of rubber bushings, looseness of bolts, and misalignment of any parts in the flexible shafts.

In the event that the drive-shaft guards are removed for maintenance, they must be reinstalled before the tower is put back into service. Failure of the drive shaft, unprotected by the drive-shaft guards, can result in excessive damage to the fan and speed reducer.

3. Flexidyne Coupling. - The Flexidyne coupling is basically a fluid-drive-type device in which metal shot are used as the "flow charge". (At the BSR, stainless steel shot is used.) When the motor is not energized and the coupling is not rotating, the shot rests in the bottom half of the doughnut-shaped hole (toroid) formed by the drive housing and the housing cover. When the motor is energized, the motor end of the coupling rotates but the driven end does not. Rotation of the motor end distributes the shot outward around the inner surface of the toroid. (This distribution is caused by centrifugal force and by the agitator action of the rotor.) As the shot begins to build up on this surface, the rotor of the driven end, which is also located in the toroid, begins to be more firmly "locked" to the inner surface of the drive housing and of the housing cover due to friction. When all of the shot are redistributed, the driven end is solidly coupled to the motor end. The Flexidyne coupling thus reduces significantly the starting torque on the motor.

4. Fan Motor. - The fan motor is a 440-v, 3-phase, 60 H_z induction motor. The power output is 7.5 hp for low-speed fan operation and is 30 hp for high-speed fan operation.

5. Fan Assembly. - The fan assembly consists of an aluminum hub turned by the fan shaft, with the nine blades attached in radial sockets. (The diameter of the assembly is 144 in.) Normally, the fan does not require much maintenance, but any unusual noise or vibration is cause for shutting the unit down for inspection. The entire assembly should be checked carefully every two months to determine that all parts are in good condition and that all assembly bolts are tight. The blades should also be inspected for cracks at the blade attachment and at points where fatigue might be concentrated.

   The cooling-tower fans were factory balanced. If it is necessary to replace or repair any part of the fan assembly, the balance must be checked when the fan is first put back into operation. An unbalanced fan assembly will result in vibration and abnormal loads being imposed on the other units of the fan drive.

6. Tower Hardware. - All metal parts in the cooling tower are subject to severe corrosive conditions. Special attention should be given to surface protection. Structural bolts must be kept reasonably tight and in good condition. In the event of failure through corrosion or other causes, bolts, nuts, and other hardware must be replaced as required.

6.3b. Preventive Maintenance

The cooling tower and secondary circulation system were designed to operate continuously, 24 hours a day. However, dependable operation demands that there be a systematic schedule of inspection, lubrication, maintenance, and ultimate replacement of all the components. To facilitate this systematic check, an inspection form is completed every two months during the regular end-of-cycle shutdown. (This inspection form is Example 6.3.1.)

1. Routine Checks. - The following checks should be made at the indicated frequency:

   a. Check once each shift when the tower is in operation for:

      (1) Unusual noise or vibration of the mechanical equipment.

      (2) Indication of the motor overheating or bearing trouble.

      (3) Proper water level in the tower basin.

      (4) Proper water distribution and break-up in the tower-fill area.

      (5) Operation of the circulating pumps.

      (6) Suction screens, for clogging.

      (7) Indication of oil leakage on the motors, pumps, and gear reducers.

   b. Every two months inspect the tower with special emphasis on the following checks: (WARNING: Be sure that the main switch is locked out before entering the fan cylinder.)

      (1) Check the speed-reducer lubricant for evidence of sludge or condensation.

      (2) Check the drive-shaft alignment-and-coupling condition.

(3) Check the condition of the fan blades and hub. Be sure the attaching bolts and cap screws are in good condition.

(4) Check and tighten, as required, the bolts holding the mechanical equipment and the tower framing.

(5) Clean the water-distribution system as required.

c. Every six months:

(1) Drain, flush, and refill the speed reducer with oil.

(2) Check the condition of the tower structural members, end-wall casing, louvers, stairway, distribution system, and fill and drift eliminators. Replace or repair any damaged members. Tighten the structural-member bolting if necessary. Test the structural wood for indication of a fungus attack by probing or testing with a hammer for soft spots. Infected members should be replaced.

(3) Inspect the condition of the Flexidyne-coupling shot.

(4) Check the axial and the radial alignment of all drive-train components.

Example 6.3.1. BSR Cooling Tower Inspection (UCN-5595)

ORR COOLING TOWER INSPECTION

OWNER	DATE INSPECTED
PLANT	INSPECTED BY
LOCATION	TOWER MANUFACTURER
INSTALLED 19 / MODEL NO.	WATER TREATMENT USED

CONDITION: 1-GOOD; 2-REPAIR; 3-REPLACE	1	2	3	CONDITION: 1-GOOD; 2-REPAIR; 3-REPLACE	1	2	3
END WALL CASING				WATER DISTRIBUTION			
LOUVERS				UNIFORM			
STAIRWAY				NOT UNIFORM			
HANDRAILS				STRUCTURAL MEMBERS			
WALKWAYS				COLLECTING BASIN			
DISTRIBUTION SYSTEM				CONCRETE			
STEEL PIPE				SUMP			
CAST-IRON PIPE				SCREENS			
FLOW VALVE				OVERFLOW			
DISTRIBUTION BASIN				FAN			
NEEDS CLEANING				BLADES			
FAN DECK FLOOR				TIP CLEARANCE			
FAN DECK FLOOR SUPPORTS				BLADE PITCH			
FAN CYLINDERS				VIBRATION NO VIBRATION			
WOOD				GEAREDUCER			
STEEL				QUIET NOISY			
FAN BEAMS AND CONNECTING FRAMING				OIL LEVEL			
MOTOR AND GEAREDUCER MOUNTS				OIL VENT			
DOORS				BACK LASH			
PARTITIONS				PINION SHAFT PLAY			
ELIMINATORS				FAN SHAFT END PLAY			
FILL				DRIVE SHAFT			
				MOTOR			
				BLOWDOWN LINES			

GENERAL COMMENTS AND REPAIR

UCN-5595
(3 3-64)

7.1 Waste Disposal System

7.1. Liquid-Waste Disposal

7.1a. References

1. P 20310 EA 011 D, Sanitary Sewer Relocation Plan, Profile and Detail
2. P 20310 EA 010 D, ILW* and Process Waste Lines Plan, Profiles, and Details
3. P 20310 EC 034 D, Heat Exchanger Bldg. Hot and Process Drains and Heating Piping Plan, Sections and Details
4. P 20310 EC 031 D, Rev. 2, Heat-Exchanger Piping Plan
5. P 20310 EA 010 D, ILW* and Process Waste Lines Plan, Profile and Details
6. P 20310 EA 011 D, Sanitary Sewer Relocation Plan, Profile and Details

7.1b. Introduction

All of the liquid waste from the BSR is, after suitable treatment and/or decontamination when needed, eventually discharged to the Clinch River via one of the small streams flowing through the ORNL area. Laboratory procedures, described in detail elsewhere,[1] ensure that the concentration of radioactive material in the river remains well below the maximum permissible level.

---

*Intermediate-level waste.

[1] J. F. Manneschmidt and E. J. Witkowski, The Disposal of Radioactive Liquid and Gaseous Waste at ORNL, ORNL-TM-282 (August 17, 1962).

7.1c. Description

Aqueous wastes may be divided into four categories according to the type of treatment given the waste:

1. Storm Sewage. - This is untreated nonradioactive waste collected from storm and roof drains or from drains in the areas not subject to contamination. This waste is discharged directly to White Oak Creek.
2. Sanitary Sewage. This includes waste from showers, sinks, and toilet facilities. It is processed by the ORNL sewage treatment plant, the effluent of which is discharged to White Oak Creek.
3. Process Waste. - This originates from various processes which normally produce nonradioactive or only slightly radioactive waste. This disposal system for this type of waste water is designed to handle an activity concentration of <10 μc/gal (~5700 dis min^{-1} ml^{-1}). The waste is treated in the ORNL radioactive-waste-disposal system and released to White Oak Creek. (Figure 7.1.1 is a flow diagram of that portion of the waste system that serves the BSR and reactor area.)
4. Intermediate-Level Waste (ILW). - This originates as demineralizer regeneration fluids and other deliberate discharges of radioactive liquids. In general, it includes discharges which have, or are likely to have, activity concentrations in excess of 10 μc/gal. This waste is concentrated by a factor of approximately 25 in the ORNL waste evaporator before being disposed of by hydrofracture methods or storage. (Figure 7.1.1 is a flow diagram of that portion of the ILW system that serves the BSR and reactor area.)

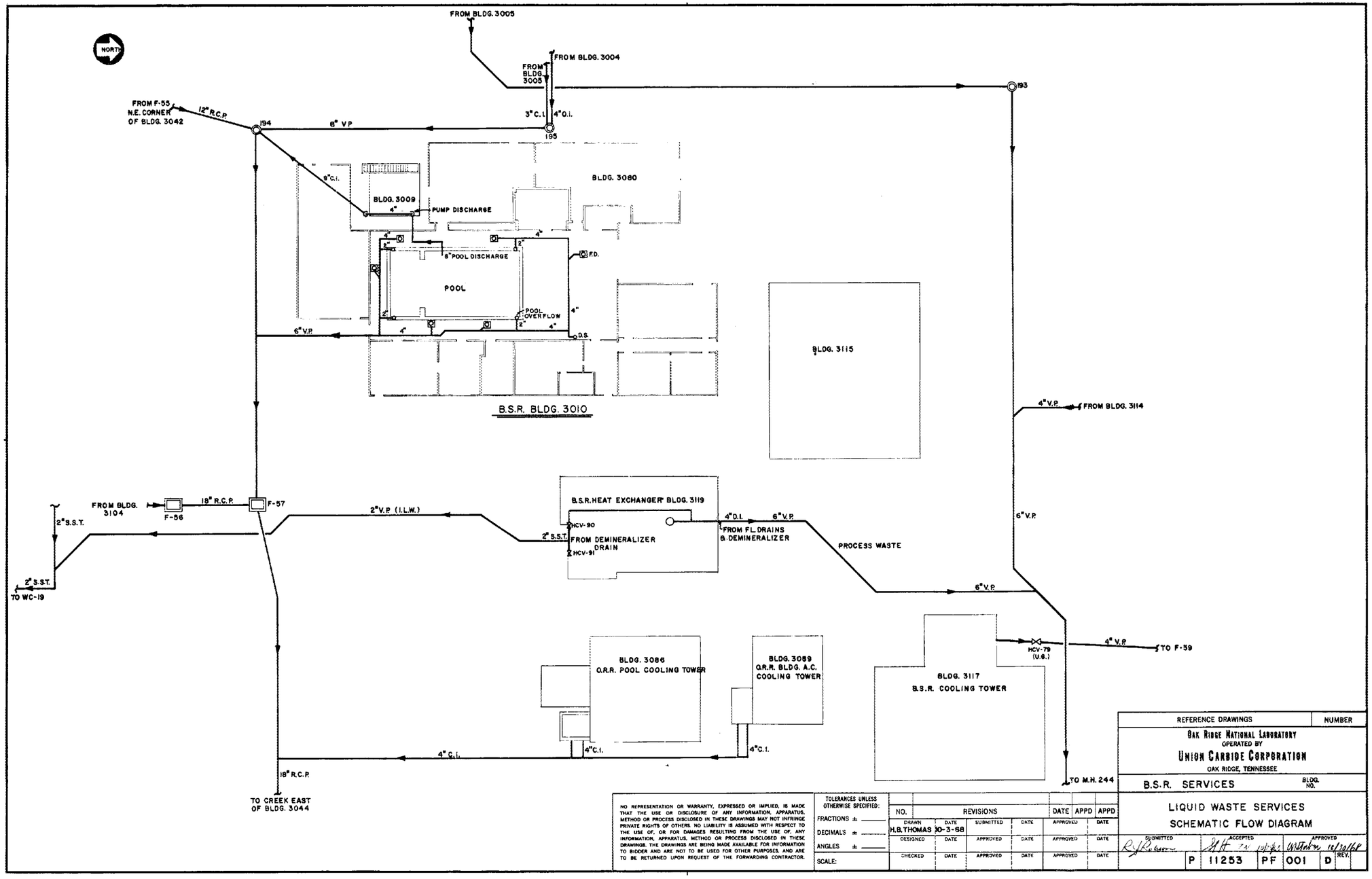

Fig. 7.1.1. Liquid Waste Services

7.1d. Operational Procedures

In general, the reactor operating crew should be familiar with the purpose of each liquid waste system and know to which system the wastes from the various processes should be routed. Specific valving procedures and sampling techniques relative to liquid waste disposal are detailed elsewhere in these procedures and need not be repeated here. Rather, the following general procedure for handling wastes is offered.

1. The radioactivity level and type of contaminant should be determined or known from previous samples or experience.
2. The chemical operator or other personnel responsible for the disposition of liquid wastes should be consulted regarding the quantity and quality of the liquid waste to be disposed of.
3. The valving steps and other operations relative to liquid wastes should be carefully carried out and any deivations from normal should receive immediate attention.

7.2. Gaseous Waste Disposal

7.2a. References

1. P 20310 EC 020 D Rev. 2, Underground Reactor Water, Air, and Off-Gas Plan
2. P 20310 EC 022 D Rev. 2, Profile of 2-In. and e-In. Off-Gas Lines
3. P 20310 EC 025 D Rev. 1, Decay Tank Off-Gas Loop

7.2b. Introduction

Two separate systems are used at the BSR for the decontamination and disposal of radioactive gases and airborne particles; these are the normal off-gas system (NOG) and the cell-ventilation system (CV)*. The NOG is designed to handle routine releases of high-concentration radioactive gases emanating primarily from process equipment or experiments. It is not intended that piping for this system become pressurized. The NOG is exhausted by positive-displacement blowers which form a seal when shut down; consequently, it is undesirable to vent high-pressure and/or high-volume-flow radioactive gas sources into it since a positive pressure within the system would cause a backflow into the several buildings which use it. At other ORNL reactors, where systems are expected to become pressurized, separate off-gas systems (POG) are utilized (see Figures 7.2.1 and 7.2.2, schematics of the off-gas systems servicing the BSR and their connecting lines with the LITR and ORR).

The cell-ventilation system is designed to remove air from the reactor building, filter it, then discharge it to the atmosphere via a 250-ft-high stack. The primary purpose of this system is to minimize the spread of airborne radioactivity in the event an accidental release of such material occurs in the reactor building.

---

*The cell-ventilation system is also referred to as the building-ventilation system.

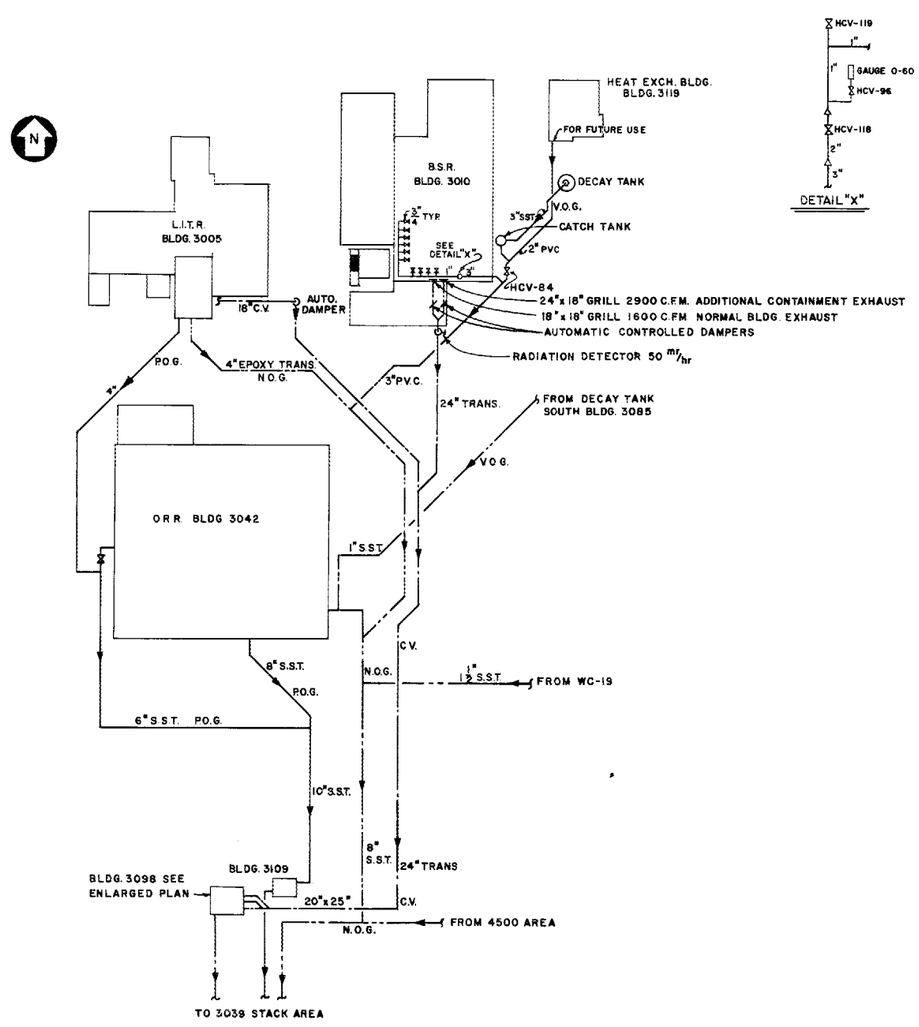

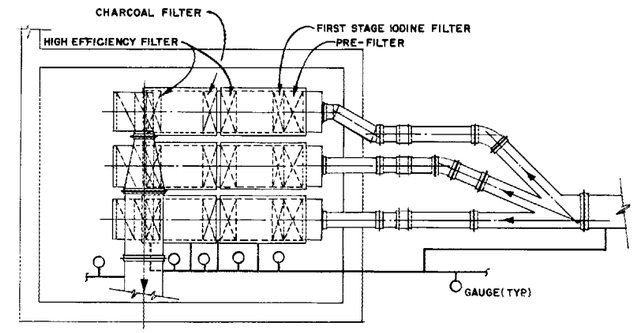

ENLARGED PLAN OF BLDG. 3098

LEGEND

V.O.G.	VESSEL OFF GAS
P.O.G.	PRESSURIZED OFF GAS
N.O.G.	NORMAL OFF GAS
C.V.	CELL VENT

NO REPRESENTATION OR WARRANTY, EXPRESSED OR IMPLIED, IS MADE THAT THE USE OR DISCLOSURE OF ANY INFORMATION, APPARATUS, METHOD OR PROCESS DISCLOSED IN THESE DRAWINGS MAY NOT INFRINGE PRIVATE RIGHTS OF OTHERS. NO LIABILITY IS ASSUMED WITH RESPECT TO THE USE OF, OR FOR DAMAGES RESULTING FROM THE USE OF, ANY INFORMATION, APPARATUS, METHOD OR PROCESS DISCLOSED IN THESE DRAWINGS. THE DRAWINGS ARE BEING MADE AVAILABLE FOR INFORMATION TO BIDDER AND ARE NOT TO BE USED FOR OTHER PURPOSES, AND ARE TO BE RETURNED UPON REQUEST OF THE FORWARDING CONTRACTOR.

TOLERANCES UNLESS OTHERWISE SPECIFIED:
FRACTIONS ± ____
DECIMALS ± ____
ANGLES ± ____
SCALE: NONE

NO.	REVISIONS	DATE	APPD	APPD
1	AS BUILT	5-1-69	T.N.	WHE

DRAWN	DATE	SUBMITTED	DATE	APPROVED	DATE
H B THOMAS	10-9-68				
DESIGNED	DATE	APPROVED	DATE	APPROVED	DATE
CHECKED	DATE	APPROVED	DATE	APPROVED	DATE

REFERENCE DRAWINGS | NUMBER

OAK RIDGE NATIONAL LABORATORY
OPERATED BY
UNION CARBIDE CORPORATION
OAK RIDGE, TENNESSEE

B S R SERVICES — BLDG. NO.

GASEOUS WASTES DISPOSAL SYSTEM
SCHEMATIC FLOW DIAGRAM

SUBMITTED — ACCEPTED — APPROVED

P 11253 PF 004 D REV. 1

Fig. 7.2.1. Gaseous Waste Disposal System

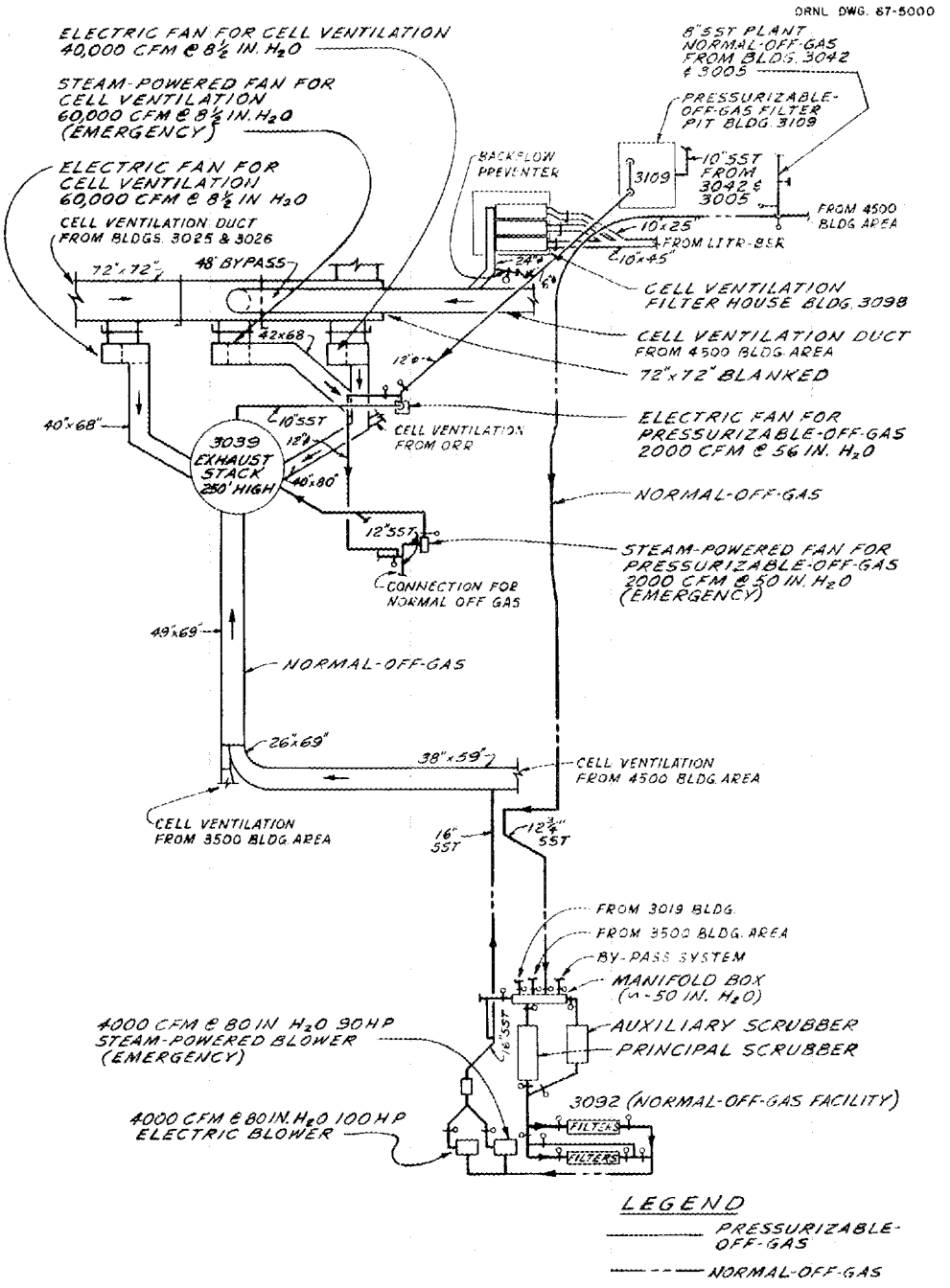

H-20301-EF-018-C

Fig. 7.2.2. Flow Diagrams of Gaseous Waste Disposal Systems in the Stack Area

7.2c. Description of the Normal Off-Gas System (NOG)

In addition to the BSR, the normal off-gas system services the ORR, and various laboratories and hot cells in the area. The 3-in.-diam line from the BSR ties into the 8-in.-diam stainless steel underground duct from the ORR (near the southeast corner of Building 3042). The 8-in. line from the ORR connects into the common off-gas system in the 3039 Stack area. The gas decontamination equipment for the system consists of a continuously operating, recirculating scrubber which uses 1% NaOH solution for iodine removal and a particle-filtering system consisting of a roughing prefilter, an absolute filter, and, downstream from the scrubber, a washable stainless steel particle filter.

Normally, suction is supplied for the system by electrically driven, positive-displacement blowers. In the event of an electrical power outage or malfunction of the electrically operated blowers, an auxiliary steam-turbine powered blower is started automatically to provide continuity of operation.

Instrumentation for the system is located in the Building 3105 control room and includes monitors of the blower status, flow, pressure, pressure drop across the filters and scrubber, and the radiation level of the effluent gas. The system is operated and maintained by the Laboratory Facilities Department of the Operations Division.

At the BSR, the NOG services the decay tank, the demineralizer units, the degasser tank, and certain pool piping. At present, there is no annunciation or control action in the event of a loss in the negative pressure. The pressure indicators for this off-gas system are: (1) a gauge in the control room (normally showing the negative pressure to be minus 28 in. of H_2O) and (2) a gauge mounted atop a capped 3-in.-diam

line located at the southeast corner of the pool. It should be noted that although there is no control action upon the loss of the NOG at the BSR, the NOG lines at the BSR should never be opened without notifying personnel at the ORR. A loss in NOG at the BSR will affect the negative pressure at the ORR; and there are automatic, reactor shutdown features in the ORR instrumentation.

7.2d. Description of the Cell-Ventilation System (CV)

During normal operation, outside air enters the BSR building via seven air-conditioning units, two gravity-operated dampers, and normal building in-leakage. Air is removed from the building via the cell-ventilation system, roof exhaust fans, and rest room exhaust fans.

The cell-ventilation system consists mainly of two ducts connecting the BSR building with a 24-in.-diam duct, a filter systems, flow radiation monitoring channels, and the services of the stack area (see Figure 7.2.1). During normal operation, the flow-rate through this sytem is about 1600 cfm. The air pressure within the building is subsequently maintained slightly below atmospheric pressure (normally, about 0.1 in. H_2O below). The flow-rate is controlled by an opposed blade-type damper which is operated by a static pressure regulator located in the west duct (immediately outside the building).

When containment is effected, either manually or automatically, a valve in the east duct opens and allows the flow-rate to increase to 4500 cfm. At this time all air-conditioning equipment and exhaust fans will be de-energized. In addition, the louvers for the air-conditioning units and exhaust fans will close along with the gravity-operated dampers. As a result, all the air entering the building will be that from

incidental in-leakage only, and all the air leaving the building will be via the cell-ventilation system.

Before being discharged to the atmosphere through the 250-ft-high 3039 Stack, the air exhausted from the BSR is filtered to remove airborne particles and radioiodine. The filter system consists of three parallel filter banks in which particle and iodine filters are arranged in series. The filters are housed in sealed metal housings. Each filter bank consists of (in the direction of flow) a prefilter, an iodine filter, an absolute particle filter, a second iodine filter, and a second absolute particle filter. Following is a description of each type of filter:

1. Prefilters. - These consist of two filter elements each in metal frames whose overall dimensions are 24 x 24 x 14 in. deep. Each filter element has a capacity of 200 scfm with an initial pressure drop of 0.41 in. of H_2O and an efficiency of 90% (NBS spot test) when loaded with approximately 700 g of NBS Cottrell Precipitate (no linters). The Fiberglas filter media is held between layers of scrim cloth and inserted into a rigid asbestos frame. The filter enclosure is valvanized steel with 1/4-in. closed-pore, soft neoprene, dovetail gaskets on both flange faces. The filter units are designated as Mine Safety Appliance Company, Dustfoe B-2000, or an approved equal.
2. First-Stage Iodine Filters. - The iodine filtering medium is flexible, knitted metallic mesh made of 32-gauge, silver-plated copper wire flattened to size, 18 x 2 mils. The knitted mesh forms a 2-in.-thick filter which is supported by a rigid frame 2 ft wide by 4 ft tall constructed of type 347 stainless steel.

3. Absolute Filters. - Each of the two absolute particle filters consists of two filter units which measure 24 x 24 x 17 1/2 in. deep and have a capacity of 1000 cfm. These absolute filters are the standard, pleated, Fiberglas type with aluminum separators (available from ORNL stores under stock No. 07-644-0512). These filters remove 99.95% of particles 0.3 microns in diameter or larger.

4. Charcoal Iodine Filters. - Each assembly consists of two units in parallel having dimensions of 24 x 24 x 11 1/2 in. and an initial capacity of 1000 cfm, with a pressure drop of 1.0 in. of H_2O. Each filter element is a pleated, perforated steel enclosure containing high-purity, coconut-shell charcoal treated with iodine to contain a minimum of 50 mg of elemental iodine per gram of charcoal in a uniform bed thickness of 1 in. +1/8 in. -0. The charcoal is thoroughly compacted to prevent further settling during use. The filter flanges are seated in the support frames on 1/2-in.-thick, closed-cell, soft neoprene, dovetail gaskets. Filters currently in use are Barnebey Chaney No. 727.

The suction fans for the BSR cell-ventilation system are the same ones used for other Laboratory cell-ventilation systems and are located in the 3039 Stack area (see Figure 7.2.2 in which the fans are labeled "electric fan for cell ventilation"). Operation of the fans is the responsiblity of the Laboratory Facilities Department, which is also in the Operations Division.

Normally, the two electrically driven blowers are in operation--one producing a flow-rate of 60,000 cfm. A steam turbine drives this emergency fan and the turbine is kept hot by a small, continuous flow of steam so that the emergency system can be in full operation 30 sec after the signal to start. The emergency system is started automatically when flow stops in the discharge duct of either fan or when the negative pressure in the suction duct of the system is lost. Two parallel, steam supply lines are provided for the emergency turbine--one is opened by an automatic air-operated valve, the other by an automatic steam-operated valve. When the steam fan is started, automatic dampers that close when the ΔP is in the proper direction isolate the electrically powered fans; and other automatic dampers open to put the steam-powered fan on the line.

7.2e. Requirements and Functional Checks

Since this system extends from the BSR building (3010) to the stack area (3039), division of responsibility is required. The Reactor Operations Department has the responsibility for all system components inside Building 3010 and to the exit side of the filter pit; the Laboratory Facilities Department assumes full responsibility for all components from the exit side of the filter pit to the stack. Each department will maintain an operating procedure, test procedure, maintenance schedule, and spare-parts inventory for their respective areas of responsiblity.

Routine testing and checkout of the system, both on a component basis and as a unit, are made on a schedule compatible with the operation of the BSR. Reactor Operations engineers are responsible for assuring that all criteria relative to system reliability have been met prior to operation of the reactor.

On a daily basis, the filter house (Building 3098) is routinely checked, and the pressure differentials across the filter banks are recorded on a data sheet at the indicators (see Figure 7.2.3 for the data sheet). If the filters are becoming plugged, it should be possible to relocate the offending section of the bank by comparing the readings obtained on previous shifts. If filter banks are to be switched, place the new bank in service before removing the unreliable bank, then record all pertinent pressure information as requested.

To ensure filter reliability, the units are subjected to removal efficiency tests every six months and must meet the minimum Laboratory requirement of 99.95% for particles less than 0.3 micron and 99.9% for iodine (particle filters and charcoal filters, respectively). For the dioctyl phthalate (DOP) test of the particle filters, the filter bank must be valved out of service. For the elemental iodine test of the charcoal filters, the filter bank being tested must remain in service.

The radiation monitors are also subjected to a functional check both by the reactor operating crew (on the 12-8 shift) and by Instrumentation & Controls Division personnel. (Any abnormalities should be reported to the Instrumentation and Controls Division, 3-6875.)

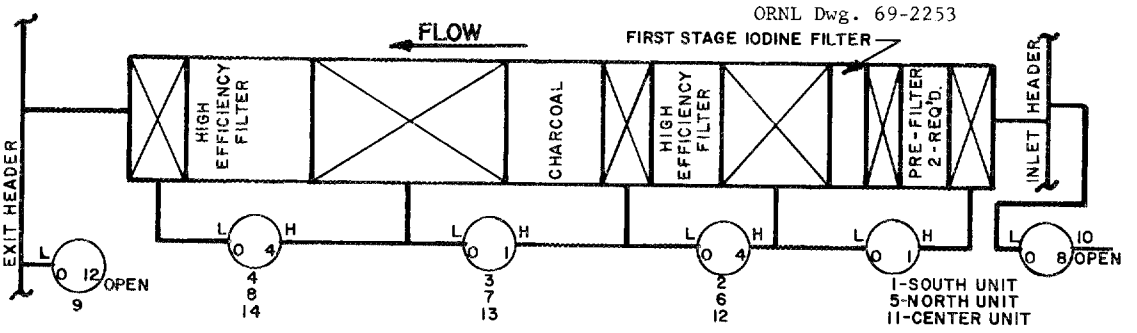

			SOUTH				CENTER				NORTH			
DATE	9	10	1	2	3	4	11	12	13	14	5	6	7	8

GAGE No.	LOCATION	RANGE-INCHES WATER
1, 11, AND 5	PREFILTER & FIRST STAGE IODINE	0 — 1
2, 12, AND 6	FIRST ABSOLUTE He-1	0 — 4
3, 13, AND 7	CHARCOAL	0 — 1
4, 14, AND 8	SECOND ABSOLUTE He-2	0 — 4
9	EXIT HEADER	0 — 12
10	INLET HEADER	0 — 8

Fig. 7.2.3. Building Ventilation Filters

7.2f. Removing the Cell-Ventilation System from Service

In the event filter banks are to be switched, serviced, or tested, the only manipulation of valving required is to close the inlet and exit valves at the filter (Bldg. 3098). Reiterating, there must be a minimum of one filter bank in service for the BSR if the reactor is to be administratively permitted to operate.

It should be noted that the BSR cell-ventilation system and the LITR cell-ventilation system are common after the underground joint east of Bldg. 3042 (see Figure 7.2.1). The automatically-operated butterfly-type valve in the LITR line has been deactivated and left in the open position. Tests have been conducted which indicate that flows at the LITR and BSR are acceptable in both the normal and containment condition. The LITR was placed in a retired state on October 10, 1968, but the cell-ventilation system for the LITR will still remain active until the fuel has been removed. For additional information concerning the cell-ventilation system, refer to Section 10.1.

7.3. Solid Waste Disposal

7.3a. Introduction

Standard ORNL practice is followed in the disposal of solid waste. Nonradioactive, burnable, solid waste is disposed of by incineration in a central facility provided by the Laboratory. Nonburnable, nonradioactive, solid waste is disposed of in the Laboratory's sanitary land-fill area.

Low-level radioactive waste is placed in yellow-painted cans which have been lined with plastic bags. The filled plastic bags are transferred to special yellow-painted Dumpsters routinely by the operating crew. These Dumpsters are transferred to the burial ground for special disposal handling. (It should be noted that wastes producing radiation of less than 3 mr/hr at the surface may be temporarily stored at the work site in yellow painted cans.)

For highly radioactive, solid waste, special handling procedures are practiced. Sometimes it is necessary to disassemble or cut up components under water or in hot cells, then remove the smaller pieces in lead casks to the burial ground. In some cases, trucks with shielded cabs must be used.

In the case of filters removed from the off-gas systems, special shields are provided. The filters can be drawn into these shields which are then removed by truck. In all cases, radioactive materials in transit must contain a tag filled out by a health physicist (indicating radiation level and destination); final disposal is accomplished by burial using existing ORNL equipment and facilities.[2]

---

[2] F.N. Browder, Radioactive Waste Management at ORNL, ORNL-2601 (April 14, 1959).

7.3b. Responsibilities

The supervisor in charge should assume the following responsibilities concerning disposal of solid radioactive waste:

1. Ensure that ORNL shipping requirements will be met concerning radioactive materials (see Section 9.2f).
2. Ensure that each container (Dumpster, carrier, etc.) is surveyed, inspected, and tagged by Health Physics personnel before it is picked up.
3. When handling nonroutine, solid, radioactive wastes (those resulting in radiation levels, at the exterior surfaces of the yellow cans, of 200 mr/hr or greater and of 400 mr/hr or greater at the exterior surface of the yellow Dumpsters), materials must meet radiation-zone requirements during storage; and, when shipped, form UCN-2822 (Example 7.3.1.) must be filled out.

Example 7.3.1. Burial Authorization for Radioactive-Contaminated Solid Waste (UCN-2822)

BURIAL AUTHORIZATION FOR RADIOACTIVE-CONTAMINATED SOLID WASTE

REQUESTER: EXECUTES THIS SECTION BEFORE ARRANGING MATERIAL TRANSFER

THE FOLLOWING MATERIALS ARE TO BE BURIED

ORIGIN-BLDG.	SECTION OF BLDG.	TYPE OF CONTAINER	PRINCIPLE RADIOACTIVE ISOTOPES PRESENT

PROTECTIVE CLOTHING REQUIRED FOR BOTH TRANSPORTATION AND BURIAL (BE SPECIFIC)

PRECAUTIONS: HEALTH PHYSICIST MUST: ☐ ACCOMPANY SHIPMENT TRANSFER ☐ BE PRESENT AT BURIAL

☐ OTHER

BURIAL INSTRUCTIONS *(See HPP#32, Responsibilities, 1.0 Area Supervision)*

TELEPHONE BURIAL GROUND FOREMAN PRIOR TO MATERIAL TRANSFER (EXTENSION 6356 OR 6046)

REQUESTER'S AUTHORIZATION FOR DISPOSING MATERIALS	NAME		BADGE NUMBER	BUILDING
	DATE	DIVISION	DEPARTMENT	ACCOUNT CHARGE

HEALTH PHYSICS: COMPLETED AT POINT OF ORIGIN OF SOLID WASTE AND BEFORE TRANSFER OF MATERIAL TO BURIAL GROUND

UNUSUAL HAZARDS

☐ **CAUTION:** DO NOT TEAR OR DAMAGE PACKAGING! ☐ **CAUTION:** FACE MASKS MUST BE USED DURING DUMPING OPERATIONS!

☐ OTHER

RADIATION LEVEL

BETA-GAMMA-SHIELDED, mrem @ inches; UNSHIELDED, mrem @ inches.

SURFACE CONTAMINATION- d/minute Bδ d/minute Alpha

PRECAUTIONARY MEASURES TO BE OBSERVED

HEALTH PHYSICS APPROVAL FOR MATERIAL TRANSFER TO BURIAL	NAME	DATE

BURIAL GROUND: COMPLETED BEFORE RETURNING COPY TO ORIGINATOR

ALL INSTRUCTIONS NOTED WERE CARRIED OUT: ☐ YES ☐ NO ☐ SEE BELOW

UNUSUAL OCCURRENCES OBSERVED

COMMENTS REGARDING FIELD WORK

BURIAL GROUND SUPERVISOR'S RECEIPT OF MATERIALS	NAME	BADGE NUMBER	DATE	TIME

DISTRIBUTION: Original - Burial Ground Foreman
1st Copy - Returns Completed to Originator
2nd Copy - Retained by Originator

UCN-2822
(123 3-64)

8. UTILITIES

8.1. Potable Water

8.1a. References

1. E-46902, Schematic of ORNL Potable and Process Water Distribution system
2. P 20310 EC 018 D Rev. 3, Outside Steam, Air, Process Water and Sprinkler Lines - Plans
3. P 20310 EC 019 D Rev. 1, Outside Steam, Air, Process Water and Sprinkler Lines - Profiles, Sections, and Details

8.1b. Introduction

The BSR potable water supply is obtained through either of two 24-in.-diam water mains. The normal water main is fed from the ORNL (potable) water reservoir located just north of the Laboratory area at an elevation of 1000 ft. The alternate water main is fed from a 3-million-gal (potable) water reservoir located on Haw Ridge at an elevation of 1035 ft. Both mains are connected in such a manner that water is supplied from either or both sources on demand.

The potable water supply at the BSR is used to service drinking fountains, the fire sprinkler system, rest room plumbing, and the emergency showers. (Figure 8.2.1 is a schematic diagram of the system.)

8.1c. Description

One of the main potable-water headers servicing the reactor area is located on the west side of the BSR building. From this header, four lines enter the building; two lines service the fire sprinkler system (control valves labeled with an F), one supplies the plumbing in the rest rooms, and the remaining line supplies miscellaneous equipment.

8.1d. Operational Procedures

The supervisor in charge of the BSR should be notified if any section of the potable water system is to be isolated for maintenance purposes or is to be returned to service following maintenance, alterations, or additions. The supervisor will direct operational activities in accordance with Laboratory procedures concerning the use and testing of potable water and will work with the Utilities Department in arranging for the manipulation of valves outside the confines of the building.

8.2. Process Water

8.2a. References

1. E-46902, Schematic of ORNL Potable and Process Water Distribution System
2. P 20310 EC 018 D Rev. 3, Outside Steam, Air, Process Water and Sprinkler Lines - Plans
3. P 20310 EC 019 D Rev. 1, Outside Steam, Air, Process Water and Sprinkler Lines - Profiles, Sections, and Details

8.2b. Introduction

The process water supply at the BSR is used to provide emergency shielding for the reactor pool, to provide service to air-conditioning units, to supply makeup water for the tower basin, and to regenerate the demineralizer units located in the heat-exchanger building. Process water lines are also connected to the hot water heat located in the northeast corner of the reactor bay and to two sinks. (This is not a standard practice; hence, water from these sources should not be used for drinking purposes.) See Figure 8.2.1 for details of the flow schemes.

8.2c. Description

The main header (6 in. in diam) is located on the west side of the BSR building. From this header, a line enters the underground vault (through valve 125 located on the hillside west of the building). The piping in the vault includes a hand-operated valve and a motorized valve in series in an 8-in.-diam pipe. These valves have no function since the piping downstream from the valves is no longer in use; and they, consequently remain closed. Preceding the hand-operated valve (in the 8-in.-diam line), a 6-in.-diam line branches to the pool; this is the source of the process water for emergency shielding.

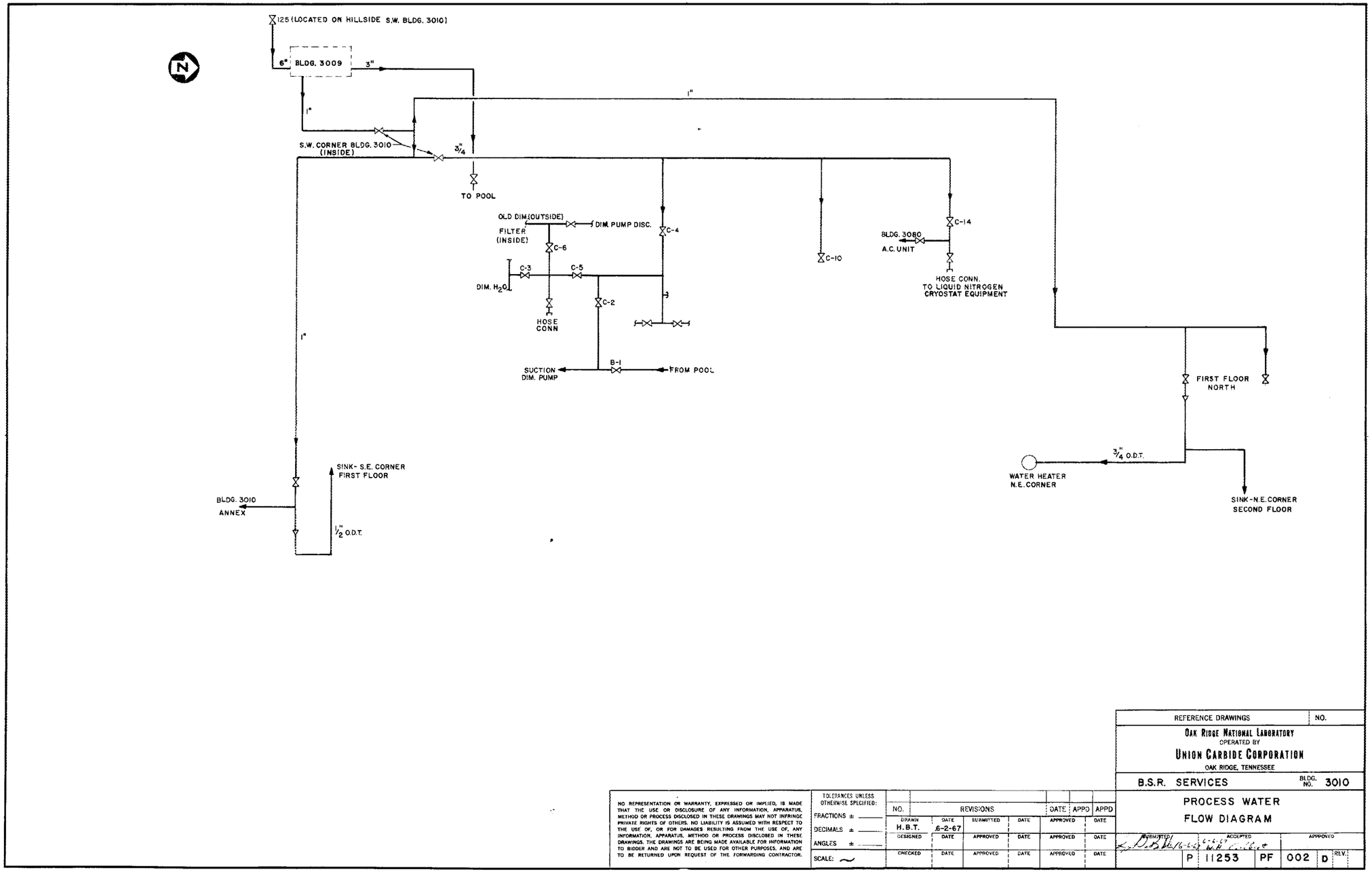

Fig. 8.2.1. Potable, Process and Demineralized Water

A 6-in.-diam branch header, located north of the reactor facility, supplies process water to the cooling tower basin and to the heat-exchanger building.

It should be noted that process water lines are still connected to such obsolete items as the heat exchanger located on the west side of the reactor building. However, the probability that these items will be used is quite low; and, should they be used, special procedures will be required.

8.2d. Operational Procedures

Operational procedures for those parts of the process water system used for filling and draining the tower, regeneration of the demineralizer, and emergency shielding for the pool are presented in detail elsewhere in this procedure. If any section of the system is to be isolated for maintenance purposes, it should be brought to the attention of the supervisor in charge of the BSR who will provide detailed instructions in compliance with Laboratory procedures and rules.

8.3. Demineralized Water

8.3a. References

1. Operating Manual for the Low-Intensity Test Reactor, Section 8.2., Building 3004 Demineralizer.

8.3b. Introduction

Demineralized water is added to the BSR pool routinely to compensate for losses caused by evaporation. In the event of an emergency requiring the addition of water to the pool for shielding purposes, demineralized water should be used unless the supply is too limited for this purpose. If the supply of demineralized water is insufficient, process water should be used. (See Figure 8.2.1 for details of the flow schemes.)

8.3c. Description

The source of demineralized water is the demineralized water plant and storage tank located in Building 3004. A 3-in.-diam line from the supply manifold, located on the west wall of Building 3004, enters the west wall of the BSR building. At the location of the west parapet, two main valves control the flow of demineralized water to the BSR pool (see Figure 8.2.1 for valve numbers).

8.3d. Operational Procedures

The procedure for adding demineralized water to the pool (routine addition) is detailed in Section 6.1h of this procedure, with emergency procedures covered in Section 10.3b. Otherwise, it is important that the operating crew should remain aware of the status of the demineralized water (quality and level in the storage tank) and the emergency procedure covering a loss of water (shielding) from the reactor pool.

8.4. Compressed Air

8.4a. References

1. P 20310 EC 024 D Rev. 1, Steam, Air and Condensing Water-Plan and Sections.
2. P 20310 EC 025 D Rev. 1, Steam, Air and Condensing Water-Plan and Sections, Sheet 2.
3. P 20310 EC 031 D Rev. 2, Heat Exchanger Piping Plan.
4. P 20310 EC 033 D Rev. 2, Heat Exchanger Piping Sections
5. P 20310 EC 020 D Rev. 2, Underground Reactor Water, Air, Off-Gas Plan.
6. H 20310 EG 008 D, Pneumatic Control System Piping Sheet No. 1
7. RC15-1-3 Rev. 5, Instrument Flow Diagram

8.4b. Introduction

Compressed air at the BSR is used primarily for pneumatic instrumentation such as recorders, air-operated valves, air-operated louvers, and air-operated pistons on the demineralizer units. (See Figure 8.4.1 for the distribution of the air services at the BSR complex.)

8.4c. Description

Two 1-in.-diam air lines enter the west side of the BSR building via the vault. One 1-in.-diam line is routed to the west side of the pool area; from this line, 1/2-in.- and 1/4-in.-diam tributary lines supply air-conditioning louvers and the pneumatic controls for the spectrometer crane (this instrument is obsolete; see Section 11.5, Auxiliary Equipment). These lines continue to the east side of the building and supply the cell-ventilation louvers. Another branch from this 1-in. line supplies the experiment annex located on the south side of the BSR building.

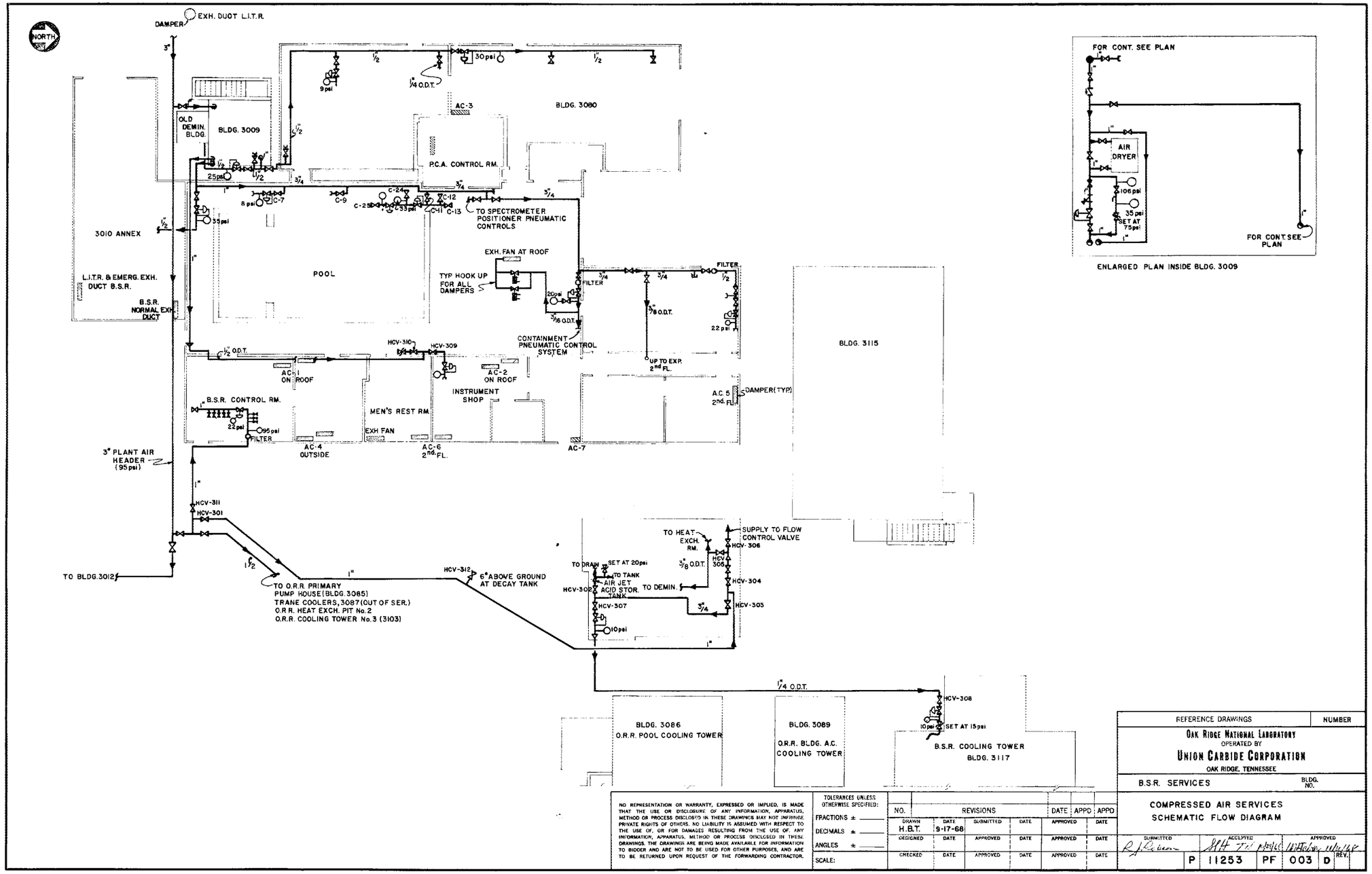

Fig. 8.4.1. Compressed Air Services

The second 1-in.-diam line (also from the vault) is located on the south and east sides of the BSR building; at present, there is no major use of this air-supply line.

A 3-in.-diam header is located on the south side of the BSR building. From this main supply line, a 1-in.-diam line is routed to the ORR pump house. It is from this 1-in.-diam line that a branch line is taken to supply air for the pneumatic instrumentation and air-operated equipment at the BSR control room, decay tank, and pump house.

8.4d. Operational Procedures

1. Valving operations related to specific parts of the reactor complex or to the various experiments will be outlined in other sections of this manual.

2. When part or all of the system is to be removed from service, the supervision in charge of the BSR will notify personnel as required and provide detailed instructions. Air lines which supply pneumatic instrumentation require special attention and should not be removed from service without approval of the BSR supervisor.

8.5. Steam

8.5a. References

1. P 20310 EC 018 D Rev. 3, Outside Steam, Air, Process Water, and Sprinkler Lines.
2. P 20310 EC 024 D Rev. 1, Steam, Air, and Condensing Water Plan and Sections.
3. P 20310 EC 034 D, Heat Exchanger Building, Hot and Process Drains and Heating Piping Plan, Sections, and Details.

8.5b. Introduction

Steam at the BSR is used for three purposes: As a source of building heat (heaters located throughout the building and at the pump house), to prevent freezing of water in piping at the cooling towers, and to jet water from the sump in the vault (Building 3009). The steam is at a pressure of 125 psig and is supplied by the ORNL steam plant. (See Figure 8.5.1 for details of the flow scheme.)

8.5c. Description

One of the steam-supply lines is routed to the vault (Building 3009) before entering the reactor building; this line services the air-conditioning heater units.

A second steam-supply line is located north of the cooling tower. From this main line, a branch is routed to the BSR cooling tower and the pump house.

8.5d. Operational Procedures

Normally, the only operational requirements associated with the steam supply is to be sure that there are no freezing problems during the winter. To avoid freezing at the secondary-water risers to the tower, valves

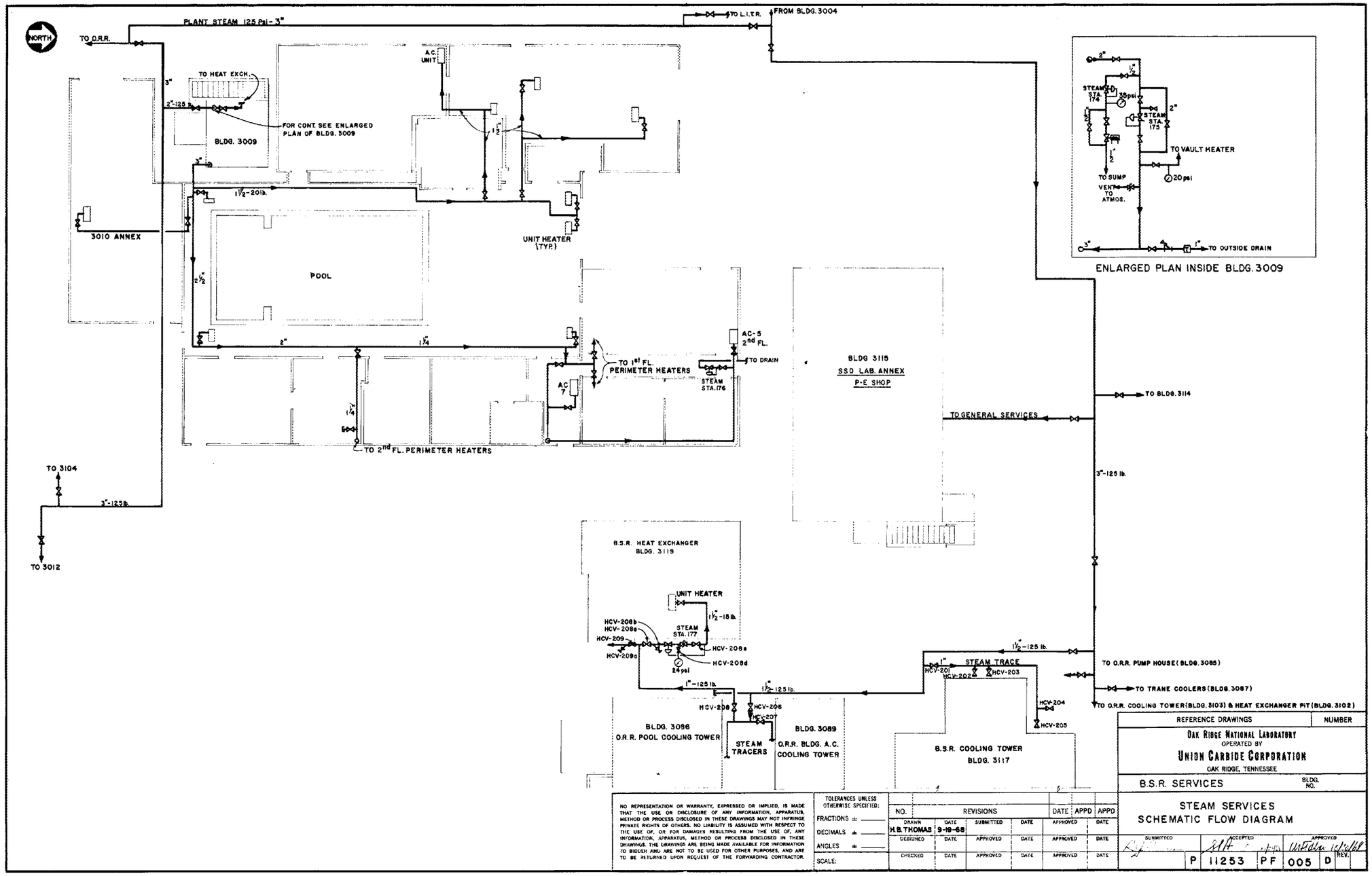

Fig. 8.5.1. Steam Services

HCV-202, HCV-203, HCV-204, and HCV-205 should be opened when the outside temperature drops to freezing. Unless there are abnormal heating trends during the day, these valves are normally left open during the winter months. Valve HCV-201, the main-supply-line valve to the tower, remains open.

Although used infrequently, the automatic steam jet in the vault should be checked routinely. (This check consists mainly of observing that the water level in the sump is below the floor level and that the float-operated valve has no obstructions.)

The steam supply valves to the heater located in the pump house remain open.

In the event certain sections of the steam supply lines are to be isolated for maintenance purposes, refer to the schematic diagrams to see which areas are affected before closing valves and be sure this action has been approved by the supervisor in charge of the BSR.

8.6. Electrical System

8.6a. References

1. RC15-1-15, Power Distribution Single Line Diagram, Rev. 4.
2. RC15-1-21A D Rev. 5, Electrical Schematic Pumps Tower Fans, Etc., Sheet 1.

8.6b. Normal Electrical Power

During normal operation, the BSR is supplied with electrical power from substation 3000. (The Tennessee Valley Authority supplies 161-kv, 3-phase, 60-cycle power to primary substation 0901 where the voltage is stepped down to 13.8 kv; this is substation 3000's supply.) The output of substation 3000 is 2.4 kw with a capacity of 10,000 kva.

The power distribution from substation 3000 to the BSR complex is via three main transformers which decrease the voltage from 2400 v to 480 v and 120 v. Two of these transformers are for "clean power" distribution panels in the BSR and PCA control rooms. (Clean power, as used here, refers to power supplies which should be left available for sensitive electronic equipment; these supplies are not to be used for electric motors, etc., which may cause voltage disturbances in the lines.)

One 2400/480/277 volts, 3-phase transformer supplies power to the remainder of the reactor complex, Building No. 3080, and the Solid State annex. From this source, electrical power is supplied to the reactor control circuits. (For details of the electrical plan, see Figure 8.6.1.)

8.6c. Emergency Electrical Power

Although the core, after 2-Mw operation, requires no forced cooling and presents negligible xenon build-up problems, emergency electrical power is supplied to certain items by a diesel-driven generator in the

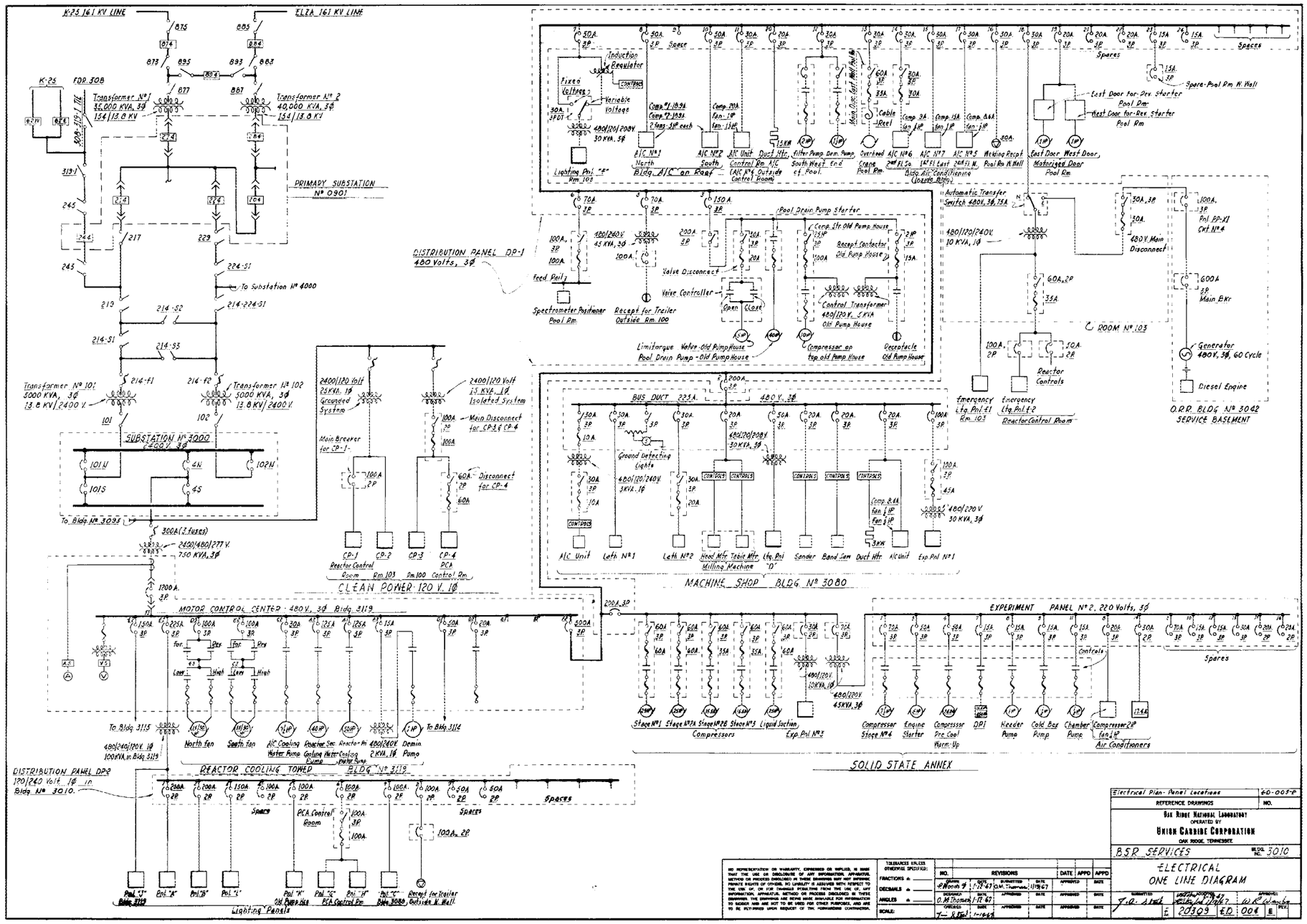

Fig. 8.6.1. Electrical One-Line Diagram

event there is an interruption in the electrical power supplied by the TVA. If the voltage drops below 70% of normal for 2 sec, an automatic transfer switch will transfer the load to the emergency generator (located in Bldg. 3042); and, after approximately 7 to 10 sec, the load will be assumed by the generator. (For further details on this subject, refer to Section 10.2.)

It should be noted that there are enough reactor components on the emergency power system to allow operation of the reactor in Mode 1 (no forced cooling required; maximum power level of 1 Mw); however, this is administratively prohibited.

8.7. Communication Systems

8.7a. References

1. E 10282 D 005 D Rev. 1, Facility Radiation and Contamination Alarm System, Sheet 1.
2. E 10282 D 006, Facility Contamination and Radiation Alarm System, Sheet 2.
3. RC 15-10-30, Intercom Elementary Diagram.

8.7b. Introduction

Serving the BSR complex, there are nine alarm and communication systems. These are:

1. The Laboratory-wide public-address system.
2. The reactor-area public-address system.
3. The BSR public-address system.
4. The dial (Bell System) phones.
5. The sound-powered phones.
6. The intercom system.
7. The evacuation alarms.
8. The area fire-alarm system.
9. The closed-circuit television-monitoring system.

8.7c. Description

1. The Laboratory-Wide Public-Address System. - Both local and Laboratory-wide instructions are given over the local public-address system. Announcements over this system are relatively infrequent. The source of such announcements would normally be the Laboratory Shift Supervisor at the ORNL Emergency Center (see Section 10 for Emergency Procedures).

2. The Reactor-Area Public-Address System. - Microphones for this system are located in two offices occupied by secretaries and in the maintenance foreman's office. These offices are in the ORR building. Incoming calls to personnel via the dial phones are received by the secretaries, and they use the public-address system to summon personnel to the phone. The microphone in the maintenance foreman's office is used quite frequently to page craftsmen in the field. This system services the BSR-ORR-LITR complex.

3. The BSR Public-Address System. - Microphones for this system are located in the BSR control room, the PCA control room, and the ORR control room. These are generally used for announcing reactor startup and shutdown information or paging operating personnel within the BSR complex.

4. The Dial (Bell System) Telephones. - Standard telephones are located in the offices and control-room annex; these are equipped with a three-line rotary system on 3-6451, 2, and 3 and one communication line (the communication line serves the ORR-LITR-BSR complex).

5. The Sound-Powered Phones. - The sound-powered phone system consists of 2 two-conductor cables (circuit A and circuit B), plug-in jacks, and head-set phones. The system is provided for communication in high-noise areas or in infrequently used areas.

6. The Intercom System. - "Teletalk" intercom sets are located in the BSR control room, the experiment room on the west side of the pool, the pump house, the ORR control room, various offices

in the ORR building, and in the LITR building. The master control sets are operated by selecting the particular stations with which communication is desired (lever in the up position) then depressing the "talk-listen" lever while talking and releasing the lever while listening. The auxiliary sets (as in the pump house) have only two buttons atop a small speaker box; the buttons are used to summon the master control sets. A second, less elaborate intercom system connects the pool area and the upstairs office occupied by operating personnel. This system is used primarily to summon operating personnel if the control-room annex is temporarily unoccupied.

7. The Evacuation Alarms. - The building evacuation alarms may be initiated manually from the BSR or the ORR control room. It may be initiated automatically by the facility radiation and contamination alarm system. These are continuous blasts from air-operated horns. For a Laboratory-wide evacuation, the signal will be a 30-second warbling, siren-like wail over the Laboratory-wide public-address system followed by verbal instructions.

8. The Area Fire Alarm System. - The area fire-alarm system has one box, No. 215, located west of the truck doors outside the building. When actuated by a switch in the BSR sprinkler system, a coded signal is transmitted over the ORNL fire-alarm system indicating the source of the alarm; coded alarms are also given by repeater bells throughout the Laboratory. At the source of the alarm, a fire-alarm horn also sounds.

9. With the exception of reactor start-ups and shutdowns, the BSR is operated remotely from the ORR control room. Since the remote console was designed to have only a few instrument read-outs, remote operation of the reactor is made possible by two closed-circuit television cameras in the BSR control room and two monitors in the ORR control room. For details of this system, refer to Section 3.4.

8.8. Liquid Nitrogen

Primarily for the convenience of the experimenters, a liquid-nitrogen supply line is located on the west wall of the reactor bay; the source of the nitrogen is a supply tank located outside the BSR building (north end). Normally, only the experimenters use the liquid nitrogen (for the cryostat on the bridge); consequently, no operational procedures are applicable.

9. SAFETY PROCEDURES

9.1. General Safety Requirements

9.1a. References

1. ORNL Safety Manual
2. Radiation Safety and Control Manual

9.1b. Introduction

The reference material cited covers the safety regulations for much of the routine activities engaged in at the BSR. Some of the work performed at the reactor facility is unique, however; and special emphasis must be placed on the safety aspects of these activities.

9.1c. Requirements for Work Around the Reactor Pool

1. The supervisor in charge of the BSR operation must be informed when anyone (Reactor Operations personnel, experimenters, or others) will be engaged in work over or around the reactor pool.
2. All pocket meters, badges, etc., should be taped to the individual's clothing to prevent their falling into the pool.
3. Walking along the top of the pool parapet is prohibited.
4. If the job is such that someone must lean over the bridge or stand on the parapet, the presence of a second individual is required. In addition, two people must be present when the following work is performed:
   a. Handling fuel elements or shim rods.
   b. Handling experiments.
   c. Handling special samples that have been irradiated.

5. When removing materials from the pool, the presence of a health physicist may be desirable. In addition, contamination and/or radiation zones must be established if such zones are required. (See Section 9.2 for specific requirements.)
6. Transparent materials (such as Tygon hose) should not be used on equipment over or in the pool. (Colored Tygon hose is available.)
7. Wrenches and other small tools should be secured to the individual or working bridge via a string, chain, or other means.
8. If a bosun's chair is suspended from the crane to allow someone to perform maintenance over the pool, the crane operator will give full and undivided attention to the operation of the crane during the entire time the person is in the chair. An observer must also be present.

9.1d. Requirements for Handling Chemicals

Routine work at the reactor facility requires the use of several potentially hazardous chemicals (such as HNO_3, H_2SO_4, NaOH, and the commercial mixtures used to treat the cooling tower basin). The following safety precautions should be observed when handling these materials.

1. A face shield, rubber gloves, and a rubber apron must be worn when transferring acid or caustic and when checking the specific gravity or level of battery acid. (See Section 6.2 for hazards of chemicals used in treating the cooling water for the secondary systems.)
2. Two men must be present when filling acid or caustic storage tanks.

9.1e. Securing Systems with Locks and Tags

Components of certain systems are required to remain in a particular mode of operation at the BSR complex. Inadvertent or incorrect operation of such components (valves and electrical switches) could have an adverse effect on the reactor and subsequently present a possible radiation hazard to personnel in the BSR area. Locks and tags are used to ensure that inadvertent and unauthorized manipulations are not made. Personnel of the Reactor Operations Department keep the various systems under surveillance and assure that appropriate control is maintained by securing the systems by one of the following methods:

1. Locked valves and equipment. - Any member of Reactor Operations Department supervision shall be responsible for securing any system with a Best padlock (3-A series) if it is deemed sufficiently important that misuse of the controls will jeopardize the safety of the reactor. In addition, each locked valve will be tagged with a "Do Not Operate" tag bearing a statement of the reason for locking the valve, the date, and the signature of the person who locked the valve or equipment. Any member of this supervision shall have the authority to unlock the lock, provided: (a) he has the approval of the person who locked the lock and signed the tag and/or (b) he has completed a thorough investigation which indicates that unlocking the lock and performing the operation in question is safe.

2. Tagged valves and equipment. - Any member of Reactor Operations Department supervision shall be responsible for affixing a signed and dated "Do Not Operate" tag to a component of a

system when, in his judgment, this is necessary to protect equipment. Such action would generally be taken when the normal status of a system has been temporarily changed to accomplish a specific purpose. Any member of this supervision shall have the authority to remove a tag provided: (a) he has the approval of the person who authorized the installation of the tag and/or (b) he has completed a thorough investigation which indicates that the tag is no longer necessary.

For a list of the valves in the two categories described above, refer to Table 9.1.1.

Actions which alter the status of a system shall be recorded in the BSR daily log book.

ORNL Official Bulletin AR-194 (Revised) outlines the procedure to be followed when alterations to electrical circuits are required. A copy of this bulletin is included as Example 9.1.1.

9.1f. Requirements Concerning the Use of Mercury

The use of mercury around the reactor complex should be avoided due to its severe corrosive action on aluminum. The use of mercury around the pool is definitely prohibited in order to avoid the most remote possibility of contact with the aluminum cladding of the fuel elements.

Exceptions to the "mercury-prohibited" rule have been permitted only under regulated conditions. Requests for deviations (made to the reactor supervisor) are reviewed by the reactor supervisor and/or members of the Technical Assistance Department. If the request is granted, a procedure for handling the mercury is developed. This rule is also applicable to mercury-operated switching devices.

Table 9.1.1. Valves in the BSR Area That Should Either be Tagged Or Locked in Their Normal Position

Valve No.	Normal Position Opened	Normal Position Closed	Tagged	Locked	Purpose of Valve
C-1		x	x		Demineralized water makeup to pool
C-8	1	1	x		Process water supply to the liquid nitrogen cryostat facility
C-14	x		x		Process water supply to valves C-8 and C-20
C-20	x		x		Process water supply to air-conditioning unit in Building 3080
C-22	x		x		Process water supply to liquid helium facilities
C-23	x		x		Process water supply to liquid helium facilities
HCV-82	x		x		Secondary cooling water to corrosion sample holder
HCV-106		x	x		Emergency process water supply to the pool
HCV-201	x		x		Steam to cooling pump (secondary and air-conditioning units
HCV-301	x		x		Air supply to Building 3119 (BSR pump house)
HCV-302		x	x		Air supply to jet for transferring acid to regenerant tank
HCV-311	x		x		Air supply to BSR control-room instruments
CHV-85		x	x		Exit primary water line vent on the reactor bridge

[1] Variable--depending on experimenter

Table 9.1.1 (continued)

Valve No.	Normal Position Opened	Normal Position Closed	Tagged	Locked	Purpose of Valve
HCV-71	x		x		Exit primary water line vent (east pool side)
HCV-73		x	x		Syphon break vent on primary water system (east wall bay area)
HCV-72	x		x		Inlet primary water to pool (east walkway valve pit)
HCV-86		x	x		Vent on inlet primary water line (outside east of control room)
HCV-50		x	x		Water test valve on line to primary water pump (pump house)
HCV-51	x		x		Inlet primary water to primary water pump (pump house)
HCV-52		x	x		Inlet primary flow to bypass filter column (pump house)
HCV-53		x	x		Exit primary flow from bypass filter column (pump house)
HCV-54		Variagle	x		Exit primary flow from heat exchanger (pump house)
HCV-55		x	x		Water test valve on discharge side of heat exchanger
HCV-75		x	x		High-point vent to heat exchanger for primary flow
HCV-95	x		x		Normal off-gas from degasser tank

Table 9.1.1 (continued)

Valve No.	Normal Position Opened	Normal Position Closed	Tagged	Locked	Purpose of Valve
HCV-95a	x		x		Normal off-gas from degasser tank
HCV-95b	x		x		Normal off-gas from degasser tank
HCV-84	x		x		Off-gas line (outside east of control room)
HCV-83	x		x		Air sweep line on top of the decay tank
HCV-89		x	x		Water test valve on secondary cooling line (under heat exchanger)
HCV-92		x	x		Vent on orifice inlet to secondary cooling (above heat exchanger)
HCV-93		x	x		Vent on orifice exit to secondary cooling (above heat exchanger)
HCV-80	x		x		Secondary cooling water, header for sample, blowdown lines
HCV-80a	1	1	x		Secondary cooling blowdown valve
HCV-80b		x	x		Secondary cooling water sampling valve
HCV-82	x		x		Secondary cooling water to corrosion sample holder
HCV-56	x		x		Inlet primary water to demineralizer pump (pump house)
HCV-57	x		x		Exit primary water from demineralizer pump
HCV-60		x	x		Water supply to jet acid from regenerant tank to cation column

[1] Depends on total solids

Table 9.1.1 (continued)

Valve No.	Normal Position		Tagged	Locked	Purpose of Valve
	Opened	Closed			
HCV-78		x		x	Regenerant valve for acid to cation column
HCV-64	x		x		Exit primary flow from demineralizer
HCV-65	x		x		Exit primary flow from demineralizer
HCV-62		x	x		Water supply to jet caustic into anion column of demineralizer
HCV-61		x		x	Regenerant valve for caustic to anion column
HCV-76		x	x		Heat-exchanger drain for primary water
HCV-77		x	x		Vent on top of heat exchanger for primary flow

Example 9.1.1. Procedure for Locking Out Electrical Switches (AR-194)

X-16

Oak Ridge National Laboratory
Oak Ridge, Tennessee

AR - 194
(Revised)

OFFICIAL BULLETIN

September 5, 1961

PROCEDURE FOR LOCKING OUT ELECTRICAL SWITCHES

To prevent accidental electrical damage to property or injury to personnel, the following electrical lock out procedure should be adhered to:

1. Authorized personnel working on electrical circuits or electrically controlled equipment operating in excess of 50 volts shall obtain a Best padlock from the North Field Service Shop, Building 3074; the South Field Service Shop, Building 3587; the Electrical and Refrigeration Shops, Building 3502; the Central Mechanical Shops, Building 7012; or the Fabrication Department - Shop A, Building 2525.

2. Whenever it becomes necessary to perform work on an electrical circuit or electrically controlled equipment, the craftsman or authorized personnel will de-energize the circuit by opening the main or branch disconnect switch. The Best padlock will then be used to secure the switch in an "open" position. All switches locked in an "open" position must be secured by as many padlocks as there are crews working on the electrically controlled equipment.

3. Whenever the switching gear is not equipped with adequate locking controls, fuses will be removed from the circuit disconnect cabinet by a qualified electrician. In addition, the de-fused circuit shall be tagged with a "DO NOT OPERATE" tag which must bear proper craftsman and circuit identity. Authorized personnel shall be responsible for the removal of their tag or lock from the circuit controls at the conclusion of their work assignments, and under no circumstance will they remove a tag or a lock not bearing their identity. The Best lock is returned to the point of issue after use.

   In the interest of plant security, the electrical craft foreman is authorized to set aside this procedure in the event energized high voltage circuit work becomes necessary.

4. A master key to the Best locks will be retained by the Safety Department supervisor.

5. The principles of the National Safety Council's data sheet, No. 237 - Methods of Locking Out Electrical Switches, is to be followed in carrying out provisions of this procedure.

J. A. Swartout

J. A. Swartout

Distribution:
All Supervisors

In the case of mercury batteries for the personal radiation monitor carried by each of the operating personnel, existing policies on discarding used batteries must be practiced. (A used battery must be sealed in masking tape and placed in a yellow dumpster.)

9.1g. Location of Safety Equipment

Safety and/or emergency equipment intended to promote safe operating practices during normal operating conditions as well as to aid the operating crew in the event of an emergency has been placed at various locations throughout the reactor complex. This equipment includes remote scram switches, fire-alarm boxes, fire-fighting equipment, safety showers,* and radiation monitors. All operating personnel are responsible for becoming familiar with these items and their locations. (See Figures 9.1.1, 9.1.2, and 9.1.3 for the location of the above-mentioned items.)

9.1h. Miscellaneous Requirements

1. During the day shift (8:00 to 4:30, Monday through Friday), a qualified supervisor must be in the reactor building if the reactor is operating and/or the doors to the reactor bay are unlocked. With the exception of a reactor startup, shutdown, or maintenance, the control-room doors should always remain locked. When unlocked, the local control room must be attended by qualified operating personnel. A qualified operator must be at the local console during a startup and must remain there until the responsibility for operation has been transferred to the operator at the remote controls. During off shifts, the

*There are only two safety showers in the BSR complex; one is located in the pump house and one is on the south side of the cooling tower.

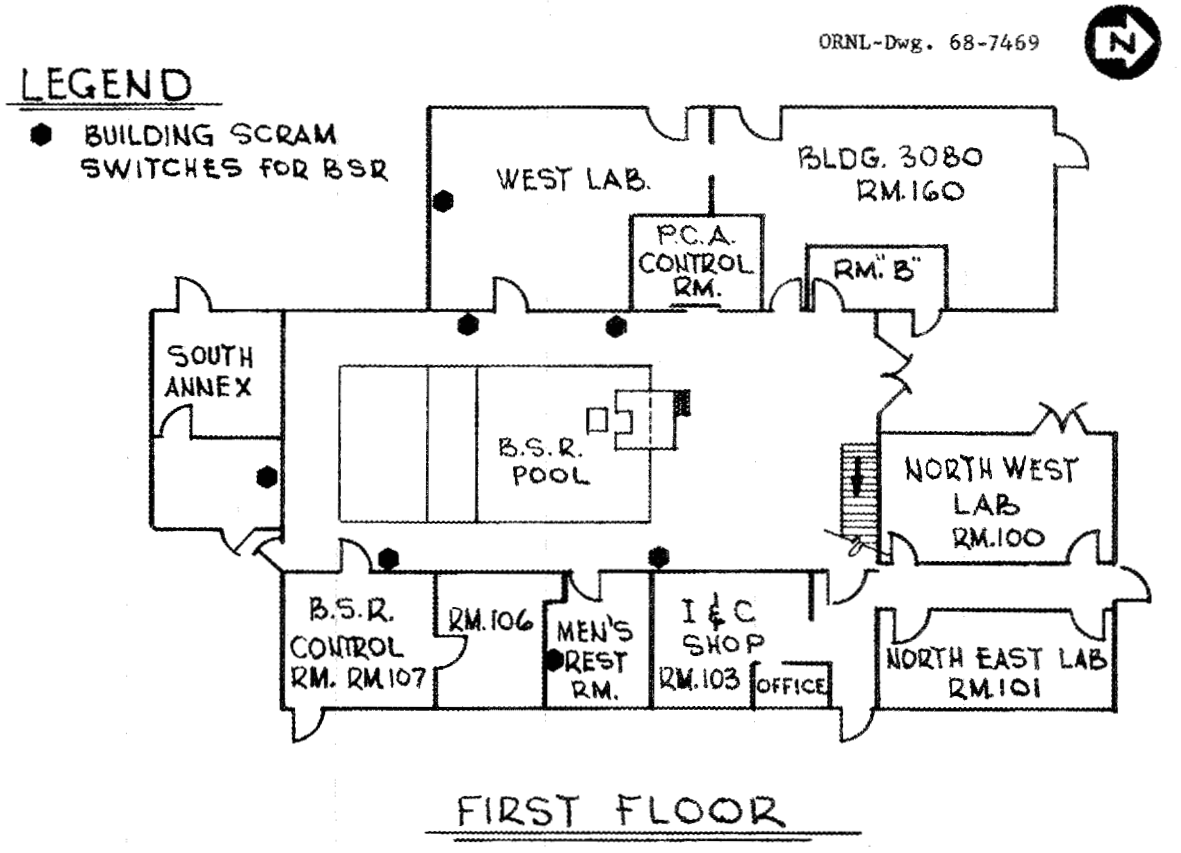

Fig. 9.1.1. Location of Seven Remote Scram Switches on First Floor of BSF, Building 3010

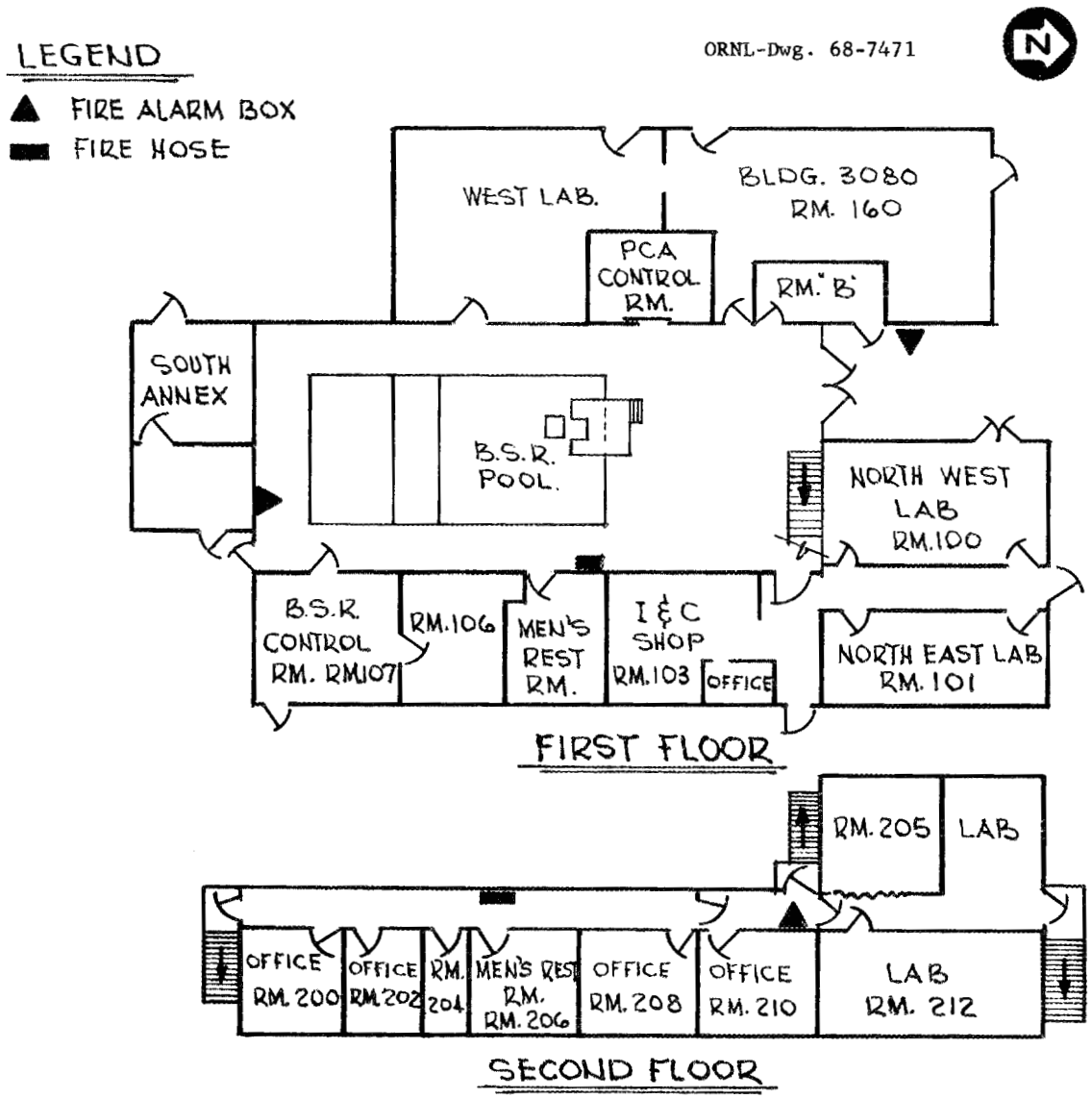

Fig. 9.1.2. Fire Protection System

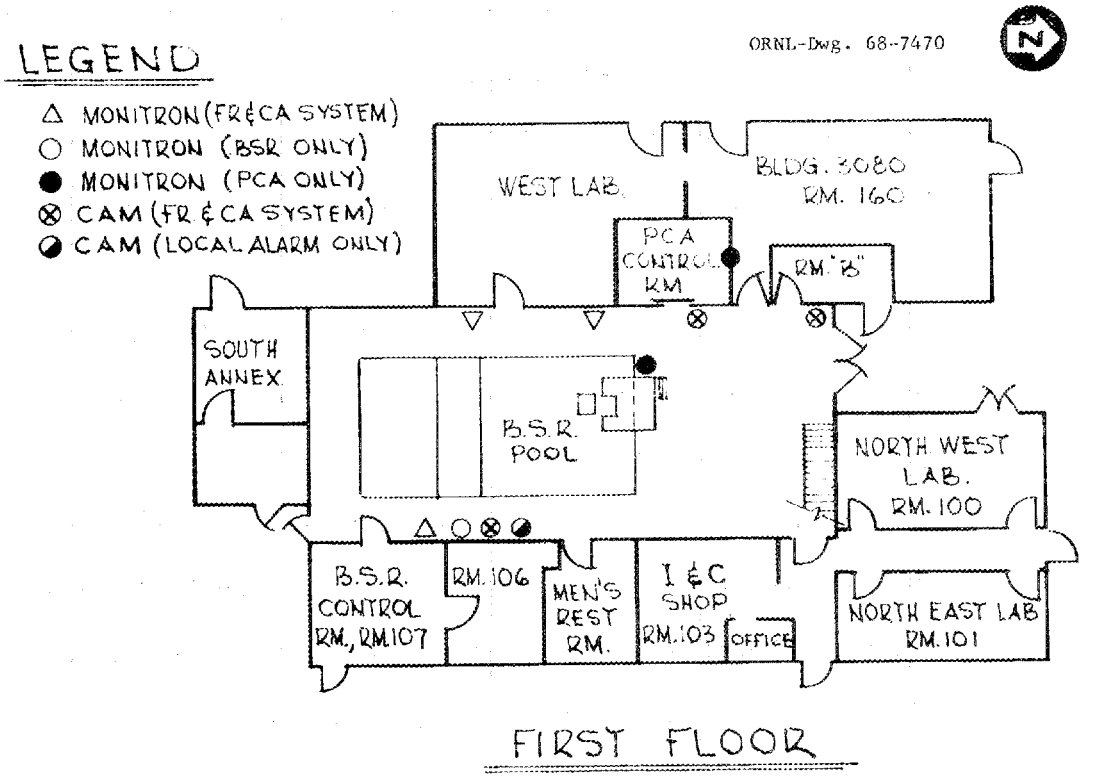

Fig. 9.1.3. Location of Monitrons and Continuous Air Monitors in BSF, Building 3010

reactor bay doors must remain locked if the bay area is unattended by the supervisor in charge.

2. All personnel working in the proximity of the reactor must carry two dosimeters and an ORNL security badge. All personnel in the Reactor Operations Department should also carry their PRM'S (personal radiation monitor).

3. In general, two persons will be present when work is performed in confined or out-of-the-way places (such as at sumps, tower basins, tower fans, etc.).

4. Whenever an individual intends to work alone in the area after normal working hours, he should notify the shift engineer (3-6451) when he arrives and when he leaves.

5. All personnel responsible for operations of the reactors in the department are required to attend an annual fire-prevention lecture. Members of the emergency squads are required to complete periodic first aid training courses.

9.2. Radiation Safety and Control

9.2a. References

1. Procedures and Practices for Radiation Protection
2. Reactor Operator Study Handbook
3. Reactor Operations Fiasco File

9.2b. Introduction

It is the policy of the Operations Division, Reactor Operations Department, to:

1. Carry out all operations with the lowest reasonable personnel exposure to radiation and contamination. In no case shall internal and external exposures exceed the recommendations of the Federal Research Council and the National Committee on Radiation Protection.
2. Perform all work in such a manner that losses resulting from contamination are minimized. Such losses may include research, development, and production time; facility and/or equipment abandonment; and the cost of cleaning up contamination.
3. Maintain environmental contamination of a level as low as is consistent with sound operating practice. In no case shall the atmospheric and water contamination exceed the maximum permissible concentration values for the neighborhood of an atomic energy installation.[1]

---

[1] Radiation Safety and Control Training Manual, ORNL, p. iii.

9.2c. Responsibilities

According to Laboratory policy, the primary responsibility for radiation safety rests on division supervision and Health Physics Division functions are essentially advisory; however, Health Physics personnel are alert to radiation hazards and do report them. Only the division concerned is assumed to be familiar enough with its own operations to evaluate the hazards involved; however, Health Physics personnel's advice on radiation and contamination control is sought when deemed necessary. It is, therefore, the responsibility of supervision to:

1. See that all areas are surveyed for radiation as required.
2. Establish appropriate boundaries and portals for zoned areas.
3. Assist Health Physics in the posting of zone signs with up-to-date instructions.
4. Provide suitable clothing-change stations for personnel working in contamination zones, with provision for storage of personal effects if needed.
5. Provide a supply of required contamination zone clothing and equipment.
6. Establish eating places as required and in accordance with Health Physics specifications.

Health Physics provides personnel monitoring, building and area surveys, exposure and survey records, consultation, and other services as required.

9.2d. Exposure Limits

The permissible occupational dose for an individual is that dose, accumulated over a long period of time or resulting from a single exposure, which carries a negligible probability of severe somatic or genetic injuries.

1. Maximum Permissible Dose--Normal Conditions. - The values indicated in the following tables are maximum values, and only in exceptional cases should the accumulated RBE (relative biological effectiveness) dose be permitted to exceed 10% of the values given.

Table 9.2.1. Maximum Permissible Dose (MPD) in Rems

Organ	MPD in Any 13-Week Period (rems/13 weeks)	MPD per Year	MPD Age Proration Total (N = Present Age)
Total body, head and trunk, lens of eyes, gonads, or blood-forming organs	3	12	5(N-18)
Skin of whole body, thyroid	8	30	30(N-18)
Hands and forearms, feet and ankles	20	75	75(N-18)
Bone	30/4n*	30/n*	(30/n)(N-18)*
Other single organs	4	15	15(N-18)

*This n is referred to as the "relative damage factor". It is one for radium isotopes and for gamma radiation; otherwise, it is set equal to five for all radionuclides in bone.

Table 9.2.2. Weekly Maximum Exposure Limit Recommendations

Organ	Weekly Maximum Recommended Limit* (External) in mrems
Total body, head and trunk, lens of eyes, gonads or blood-forming organs	100**
Skin of the whole body	600
Hands and forearms, feet and ankles	1,500

*Laboratory-wide standards.

**The Reactor Operations Department limits are 50 mrem/week on whole-body doses to fully ensure compliance with Laboratory standards, with the other limits correspondingly cut in half.

Table 9.2.3. Approval Required for Exposure to High Dose Rates

Dose Rate Range (rem/hr)	Special Approvals Required		
	Area Division Director	Health Physics Division Director	Deputy Laboratory Director
5-20	x		
20-50	x	x	
Over 50	x	x	x

In addition, when planned doses exceed the weekly limits, the following approvals are required:

Authorized Dose Accumulation	Special Approvals Required
>60 mrem per single day to nonoperating personnel and/or >300 mrem per single week to operating personnel	Division Director in charge of individual
>1 rem per single exposure	Division Director in charge of individual and Deputy Laboratory Director

2. Maximum Permissible Dose--Emergency Conditions. - The emergency conditions which justify the maximum permissible dose a person may receive are:

   a. When another person's life may be saved.

   b. When large-scale releases of radioactive material (dust, gas, or liquid) that may endanger other peoples' lifes or health may be averted.

   c. When considerable damage to a facility may be averted.

It is obvious that if sufficient time exists the health physicist should be consulted and an acceptable technique for a planned dose should be followed.

The Laboratory's acceptable emergency dose to persons regularly sustaining measurable exposures is 10 rem. For all others it is 25 rem.

9.2e. Zoning Requirements

1. Radiation Zone. - A radiation zone is an area in which control measures are established to prevent or minimize external radiation exposure (see Table 9.2.4).

Table 9.2.4. Regulations for Posting and Establishing Radiation Zones

Dose-Rate Range	Immediate Action	Follow-up Action
2.5 mrem/hr to 5.75 mrem/hr	Post low-level tag if the accumulated daily dose to personnel may be 20 mrem	Periodic review
6 mrem/hr to 1 rem/hr	Post warning signs or tags	Rope off the area if the accumulated weekly dose may be 1 rem

Table 9.2.4 (continued)

Dose-Rate Range	Immediate Action	Follow-up Action
1 rem/hr to 3 rem/hr	Post warning signs or tags, rope off area	Erect a barricade which provides absolute exclusion of personnel if the accumulated weekly dose in the area may be 12 rem; lock or block the entrance
>3 rem/hr	Post a guard until a temporary barricade has been erected; lock and/or block entries	

2. Contamination Zone. - A contamination zone is an area in which control measures are established to prevent or minimize internal radiation exposure and the spread of the radioactive contaminant.

A contamination zone should be established when one or more of the following values is exceeded.

Type of Radiation	Air Contamination (μc/cc)	Direct Reading Surface Contamination	Transferable Surface Contamination (d/m/100 cm^2)
Alpha*	2×10^{-12}	300 d/m/100 cm^2	30
Beta-Gamma	3×10^{-10}	0.25 mrad/hr	1000

*The alpha surface-contamination levels are maximum values and are derived primarily to serve as a guide when the contamination involves a small area such as a single room or cell. When the contamination is extensive and involves radionuclides such as plutonium or some other long-lived emitter of comparable toxicity, the alpha levels permitted should average no more than 1/10 of the above values.

3. Regulated Zone. - A regulated zone is an area in which operations are restricted in order to control contamination. This zone may contain radiation zones, contamination zones, or both, ranging in size from a small spot to a large area.

4. General Entry Requirements

   a. Radiation Zones. - Operating personnel, when entering a radiation zone, should always carry their film badges, pocket pencil meters, and personal radiation monitors. In addition, radiation surveys, monitoring instruments, and direct-reading dosimeters may be required.

   b. Contamination Zones. - In addition to film badges, pocket pencil meters, and personal radiation monitors, operating personnel should wear "C" clothing (coveralls or lab coats), gloves, and shoe covers when entering contamination zones. Other items which may be necessary are: cap; assault mask, for air contamination; survey instruments; paper towels or smear papers; direct-reading dosimeters; and a continuous air monitor.

      In situations in which gross contamination is known or may be expected, two pairs of coveralls should be worn; the outer pair should be removed immediately upon leaving the "C" zone to prevent spreading the contamination. In all cases, persons and equipment leaving a "C" zone must be monitored at the exit of the zone for contamination to prevent the spread of radioactive materials into places where people normally take no protective precautions.

c. Regulated Zone. - Persons entering the regulated zone from a contamination zone must be monitored for contamination.

9.2f. Requirements for Shipping Irradiated Materials

It is the responsibility of the supervisor in charge to ensure that all containers holding irradiated materials are within radiation and contamination tolerances before allowing them to be transferred from the building. The containers must be surveyed by a health physics surveyor; he must also affix a tag designating the contents, the level of radiation, and the level of contamination (see Example 9.2.1). Shielding and cleaning requirements should be such that the radiation levels listed in the following table (Table 9.2.5) are not exceeded.

Table 9.2.5. Shipping Requirements, Radioactive Materials

Nature of Shipment	Direct Reading Radiation Level	Transferable Contamination ($d/m/100\ cm^2$)	
		Alpha	Beta-Gamma
Containers for shipment within the plant area	1 r/hr at one foot	30	1000
Containers for shipment outside the plant area (by commercial carrier)	200 mr/hr at contact	30	500*

*The tolerance allowed on the Idaho fuel carriers is 1000 $d/m/100\ cm^2$; these containers are shipped on special consignment.

9.2g. Radiation Surveys

Since it is conceivable that radiation levels may change from time to time or increase slightly without reaching the preset points of the radiation alarm system, the reactor complex is surveyed weekly on a routine basis and records on background radiation levels are maintained.

Example 9.2.1. Radiation Hazard - Material Transfer Tag (UCN-2785)

UCN-2785
(3 10-61)

RADIATION
HAZARD

RADIATION SURVEY READINGS

EXTERNAL DOSE RATE

Beta _____ mrem/hr at _____
_____ mrem/hr at _____
Gamma _____ mrem/hr at _____
_____ mrem/hr at _____
Neutron _____ mrem/hr at _____

TOTAL DOSE RATE _____ MREM/HR at _____
_____ MREM/HR at _____

SURFACE CONTAMINATION

ALPHA (MAX) PROBE _____ d/m/100 cm^2
SMEAR _____ d/m/100 cm^2

BETA-GAMMA (MAX) PROBE _____ mrad/hr
SMEAR _____ d/m/100 cm^2

Surveyed by _____ Date _____

MATERIAL TRANSFER—SEE OTHER SIDE

RADIATION
HAZARD

DESCRIPTION OF CONTENTS

☐ COMPACT SOLID ☐ LIQUID ☐ GAS ☐ FINE POWDER

CHEMICAL FORM

RADIOISOTOPE CONTENT (μc, mc, c) IF KNOWN

_____ _____ _____
_____ _____ TOTAL _____

SHIPPER LOCATION

RECEIVER LOCATION

RECEIVER NOTIFIED OF SHIPMENT ☐ YES ☐ NO

PRECAUTIONS AND INSTRUCTIONS
FOR HANDLING, OPENING, STORAGE, OR DISPOSAL

SEE OTHER SIDE

MATERIAL TRANSFER

The specific areas surveyed are listed on a special form (Example 9.2.2). It is the responsibility of the supervisor in charge to evaluate these data on a comparative basis with previously obtained data and investigate any unexplained, significant changes. (Completed forms are filed in the BSR control room office.)

9.2h. Radiation and Contamination Monitors

To help maintain a high degree of operating safety in regard to radiation hazards, there are a number of radiation alarm units throughout the reactor complex. These units are:

1. The Monitrons and continuous air monitors of the facility radiation and contamination alarm system (Monitrons initiate a low-level alarm at 7.5 mr/hr and a high-level alarm at 23 mr/hr; the continuous air monitors initiate a low-level alarm at 1000 counts/min and a high-level alarm at 4000 counts/min).
2. The high-bay Monitron, which alarms at 125 mr/hr.
3. The cell-ventilation duct monitor, which alarms at 50 mr/hr.
4. The radiation monitor west of the control room, which alarms at 12 r/hr.

For a detailed description of these systems, refer to Section 3.5.

9.2i. Analysis of Reactor Primary Water

A knowledge of the nature of the radioactivity in the reactor primary water is of importance for quality control; and, in the event there were a contamination problem or an abnormal increase in the amount of specific radioactive nuclides in the water, this knowledge would be beneficial in evaluation procedures.

Example 9.2.2. BSR Area Radiation Survey (UCN-9;45)

BSR AREA RADIATION SURVEY

PERFORMED BY		REASON
DATE	TIME	

NOTE: A survey meter (G-M counter) which will read a maximum of 20 mr/hr shall be used for this survey with a cutie pie used when the radiation level is greater than 20 mr/hr.

LOCATION			PRE-SET POINT RAD. READ. (mr/hr)	MAXIMUM BACKGROUND READING (mr/hr)
1. Control Room	Control Console			
2. Reactor Bay	Walkways	East		
		West		
		North		
		South		
	Over Reactor (at bridge)			
	Skimmer System Filter Columns			
3. Pump House	Primary Pump Inlet			
	Demineralizer - North of Shield Wall			
	Demineralizer - Cation			
	Demineralizer - Anion			
	Heat Exchanger			
	Filter Column			
4. Outside Area	Decay Tank			
	Degasser Tank			
	NOG Catch Tank			
	Manhole for Primary Flow Orifice			
5. Lab Area	South Lab and Equipment Room			
	West Lab - North Section			
	West Lab - South Section			
6. Shops	Instrument Shop			
7. Second Floor	Hallway			

UCN-9145
(3 4-69)

A daily check of the gross β,γ activity of the reactor water is made by Operations personnel. The results of this check, reported as dis/min/ml, are recorded and used as a guide to indicate changes in the radioactive content of the water. In addition, yearly samples are submitted for ionic and radioactive analyses. The sample schedule is staggered; i.e., at a specified data a one-gallon sample of reactor primary water is submitted to the General Analysis Laboratory for a standard qualitative and quantitative analysis; six months later, a one-gallon sample is submitted to the Radiochemical Analysis Laboratory for an analysis of the radioactive nuclides. (These samples should be accompanied by a "Request for Control Analysis" form, UCN-1910.)

As with the daily checks, the supervisor in charge is responsible for scanning the data received (and logged) for any abnormal trends.

Typical analytical reports (filed in the BSR control room office) reveal the following information:

1. From the General Analysis Laboratory - F^-, 0.76 ppm; NO_3^-, <1 ppm; SO_4^{--}, <0.2 ppm; Cl, <0.5 ppm; Cu, <0.03 ppm; Ni, <0.03 ppm; Fe, <0.02 ppm; Cr, <0.02 ppm; Si, <1.7 ppm; Al, <0.02 ppm; U, <0.001 ppm; Ca, <0.02 ppm; Mg <0.005 ppm; and Na, <0.11 ppm.

2. From the Radiochemical Analysis Laboratory (in dis/min/ml) - , ^{24}Na, 3.2×10^3; ^{133}I, 5.9; ^{131}I, <0.2; ^{103}Ru, <0.2; ^{106}Ru, <0.2; ^{137}Cs, <0.06; ^{91}Sr, <3; ^{89}Sr, <0.3; ^{239}Np <3; ^{143}Ce, <0.3; ^{141}Ce, <0.2; and ^{140}Ba, <2.2.

9.3. Work Permits

9.3a. Introduction

Oak Ridge National Laboratory policies require that the necessary safety precautions be exercised in connection with work performed at the Laboratory and, in certain instances, that a work permit be completed prior to the performance of the work. It is the responsibility of the Reactor Operations supervisor in charge to be aware of the need for such permits and to maintain the records as indicated on the forms.

9.3b. Radiation Work Permits

The "Radiation Work Permit" (Example 9.3.1) is used in situations where personnel may be exposed to radiation or contamination in excess of certain limits. Operating personnel assigned to a particular process may not need a radiation work permit for routine work where there are posted regulations. The radiation work permit is required as follows:

1. For nonoperating personnel.
2. Where specified by other procedures or special situations.
3. When an individual may receive greater than 20 mrems, whole body dose.
4. When radiation fields exceed 5 rems/hr.
5. When air contamination exceeds the maximum permissible concentration.

The radiation work permit specifies the precautions and monitoring required and provides a record of the necessary approvals and doses accumulated in doing the work. This form is completed only by a qualified health physics surveyor after a survey is made. The permit must be signed by the health physics surveyor making the survey, by the craft

Example 9.3.1. Radiation Work Permit (UCN-2779)

RADIATION WORK PERMIT (RWP)

DATE AND TIME FROM AM PM TO AM PM | EXTENDED BY TO AM PM | WORK PERMIT NO. № R-31413

LOCATION & JOB DESCRIPTION

RADIATION SURVEY DATA (To be filled in by Health Physics)

LOC. CODE	SPECIFIC LOCATION AND DISTANCE FROM SOURCE	TYPE OF RADIATION	mrem/hr.	WORKING TIME FOR ____ mrem	CONTAMINATION TYPE	CONTAMINATION MEASUREMENT	RADIATION SURVEY BY	RADIATION SURVEY DATE AND TIME
A								
B								
C								
D								

INSTRUCTIONS*

HEALTH PHYSICS MONITORING REQUIRED: ☐ START OF JOB ☐ INTERMITTENT ☐ CONTINUOUS ☐ END OF JOB

CONTACT HP FOR SURVEY BEFORE STARTING WORK IN A NEW LOCATION		PROVIDE ASSISTANCE FOR REMOVAL OF PROTECTIVE CLOTHING	
TAPE COVERALLS TO GLOVES AND FOOTWEAR		MONITOR BREATHING ZONE	
CHECK TOOLS AT END OF JOB		NASAL SMEAR REQUIRED	
CHECK PERSONNEL AT END OF JOB		BIOASSAY SAMPLE REQUIRED	
TIMEKEEPING REQUIRED		DO NOT WORK ALONE - STANDBY OBSERVER REQUIRED	

REMARKS

PROTECTIVE EQUIPMENT AND MONITORING INSTRUMENTS

CAP		COVERALLS (1 PR.)				SHOE COVERS		POCKET METERS	
CANVAS HOOD		COVERALLS (2 PR.)				C-ZONE SHOES		DOSIMETER	
SAFETY GLASSES		GLOVES		CANVAS		RUBBERS		FILM RING	
EYE SHIELD		GLOVES		LEATHER		RUBBER BOOTS		DOSE-RATE ALARM	
HALF MASK		GLOVES		SURGEON'S		PLASTIC BOOTEES		DOSE ALARM	
ASSAULT MASK		GLOVES		PLASTIC		LAB COAT		CUTIE PIE	
CHEMOX MASK		GLOVES		RUBBERIZED CANVAS		SPECIAL FILM METER		GMS METER	
AIR-LINE HOOD		GLOVES		HOUSEHOLD RUBBER					
AIR-LINE SUIT		GLOVES							

REGULAR APPROVALS	SPECIAL APPROVALS
HEALTH PHYSICS CERTIFICATION	DIVISION DIRECTOR
SUPERVISION	H.P. DIVISION DIRECTOR
SUPERVISION	DEPUTY LAB DIRECTOR

UCN-2779 (3 7-61)

*Only items checked (✓) apply.

(OVER)

Example 9.3.1 (continued)

1. Health Physics shall be present for line breaks or removal of shielding.
2. Notify Health Physics of any deviations from instructions and changes in working conditions.
3. Personnel survey is required when leaving contamination zones.
4. Return work permit to Health Physicist upon completion of job or expiration of permit.

TIMEKEEPING BY _____

DEPT. _____

PERSONNEL AND EXTERNAL EXPOSURE CONTROLS						PLANNED EXPOSURE (mrem)	TIME RECORD							ESTIMATED EXPOSURE (mrem)
NAME	DEPT.	P.R. NO.	LOCATION CODE	DOSE RATE USED	WORKING TIME		BEGIN	END	BEGIN	END	BEGIN	END	TOTAL TIME	

1. **Radiation Work Permit is required* when:**
   (a) expected dose is >20 mrem to the body or 300 mrem to extremities for an individual during a single work assignment;
   (b) dose rate >5 rem/hr (total body);
   (c) airborne radioactivity is > $(MPC)_a$ for a 40-hr week;
   (d) specified by divisional operating rules and procedures or by posted regulations.
2. **Supplementary Time Sheet**
   To be used if extra space is needed for the timing of individuals into and out of an area, etc.
3. **Special Approvals**
   (a) Dose Rate rem/hr (total body)

>5	Division Director in charge of work area	Oral or written; noted and initialed on the permit by the person obtaining the approvals.
>20	Above and Health Physics Division Director.	
>50	Above and Laboratory Deputy Director.	

   (b) Dose (total body)

>60 mrem/day for nonoperating personnel, or >300 mrem/wk for operating personnel	Division Director in charge of individual
>1 rem	Above and Laboratory Deputy Director

4. **Copies**
   (a) The RWP must be posted or available at work site.
   (b) Health Physics maintains a copy for record and reference purposes.
   (c) A copy must be distributed to appropriate line supervision.

*Posted regulations may be used in lieu of an RWP for *operating personnel* under specified conditions. (See Regulation 3, Procedure No. 26, ORNL Health Physics Manual.)

foreman in charge of the job, and by a member of Reactor Operations supervision (usually the shift supervisor). Radiation work permits expire at the end of eight hours but may be extended for an additional eight hours by the health physicist.

9.3c. Hazards Work Permit

A "Hazards Work Permit" (Example 9.3.2) is required when service personnel are exposed to environmental hazards arising out of work in an area, on equipment, or with materials which they do not have complete knowledge of and over which they do not exercise complete control. Permits are required for, but not limited to, the following situations:

1. Any welding or burning operation.
2. Any operation in which ignition of flammable gases or liquids is possible.
3. Any activity in which release of toxic, corrosive, or highly reactive chemicals is possible.
4. Work to be performed in the presence of mechanical or physical hazards such as moving machinery, dangerous heights, high pressures, etc.
5. Any change in the status of equipment, facilities, or system that would create additional hazards or eliminate any safeguards against hazards.

Hazards Work Permit forms must be completed by the craft foreman and signed by that foreman and by a member of Reactor Operations Department supervision.

Example 9.3.2. Hazards Work Permit (UCN-3226)

HAZARDS WORK PERMIT

ISSUED TO: FOREMAN OR REPRESENTATIVE	BADGE NUMBER	DEPARTMENT	PHONE NUMBER

	SHIFT	DATE	TIME		SHIFT	DATE	TIME	WORK ORDER NO.
FROM				TO				

LOCATION OF WORK	BUILDING NUMBER	FLOOR	ROOM NUMBER

DESCRIPTION OF WORK

PRECAUTIONS TO BE TAKEN IN PREPARATION FOR WORK

GENERAL PREPARATION	YES	NOT APP'D	FIRE PREVENTION	YES	NOT APP'D
VALVES CLOSED AND TAGGED VALVE NUMBERS			TEST FOR FLAMMABLE VAPORS		
EQUIPMENT DRAINED AND CLEANED			IGNITION SOURCES REMOVED		
PIPELINES BLANKED			WELDING AND BURNING REQUIRED		
MOVING MACHINERY GUARDED			INSTRUCTIONS ON REVERSE SIDE COMPLIED WITH		
AREA ROPED OFF			WELDER'S NAME		
SPECIFY VESSELS VENTED			FIRE WATCHER'S NAME		
OTHER			OBSERVERS		

HEALTH			ELECTRICAL		
TEST FOR TOXIC MATERIAL			NON-ELECTRICAL PERSONNEL EXPOSED TO ELECTRICAL HAZARDS*		
SPECIAL VENTILATION REQUIRED					
PROTECTIVE EQUIPMENT REQUIRED			CIRCUITS DEENERGIZED, TAGGED, LOCKED OUT		
☐ RESPIRATOR ☐ GLOVES ☐ EYE PROTECTION			SPECIFY		
☐ GAS MASK ☐ CLOTHING					

OTHER PRECAUTIONS

I have personally inspected the work site and certify that the area is cleared for work and that conditions are safe for the work indicated.

SUPERVISOR REQUESTING WORK	PHONE NUMBER	ELECTRICAL DEPARTMENT FOREMAN*	PHONE NUMBER

PERMIT TERMINATION

WORK COMPLETED	PERMIT TERMINATED		WELDING AND BURNING	
	DATE	TIME	TIME STARTED	TIME FINISHED

SUPERVISOR REQUESTING WORK	MAINTENANCE FOREMAN

COMPLIANCE WITH C-5 (ON REVERSE SIDE)
CHECKED BY:

Distribution: Original given to Maintenance Foreman for display at work site. Duplicate retained by issuing supervisor. Upon termination of the permit, duplicate is completed and maintained for division file. The original is completed by the Maintenance Foreman and forwarded to the Safety Department (to the Fire Department when welding and burning has been performed).

* Approval of Electrical Department Foreman is required when personnel other than electricians will be exposed to electrical hazards.

UCN-3226
(3 11-61)

(SEE REVERSE SIDE FOR INSTRUCTIONS)

Example 9.3.2. (Continued)

A. **A Hazards Work Permit** is required where service personnel are exposed to environmental hazards arising out of work in an area, or on equipment, or with materials of which they do not have complete knowledge, and over which they do not exercise complete control. Situations requiring permits, but not limited to these are:

1. Any welding or burning operation.

2. Where ignition of flammable gases and liquids is possible.

3. Where release of toxic, corrosive or highly reactive chemicals is possible.

4. Work to be performed in the presence of mechanical or physical hazards such as: moving machinery, dangerous heights, high pressures, etc.

5. Any change in status of equipment, facilities or system which would create additional hazards or eliminate any safeguards against hazards.

B. **Workers Authorized by Permit** shall ensure that equipment being used is in good condition and that the manufacturer's instructions for maintenance are followed.

C. **Necessary Precautions Against Fire** (Responsibility of Supervisor Requesting Work) when Welding and Burning is being performed.

1. Before welding, make sure sprinklers are in service. Call the Fire Department if in doubt.

2. Before starting, sweep floors clean, wet down wooden floors, or cover them with sheet metal metal or equivalent. In outside work, don't let sparks enter doors or windows.

3. Move combustible material 35 ft. away; cover what can't be moved with asbestos curtains or sheet metal, carefully and completely.

4. Arranges for an employee or employees, equipped with hose, extinguishers, or fire pails to watch sparks and see that they do not start fire. Where fire hazard is slight, the authorizer may assign the task to the observer.

5. After completion, watch scene of work a half hour for smoldering fires, and inspect adjoining rooms and floors above and below. (To be made by authorizer or his designated representative.)

6. Don't use the equipment near flammable liquids or on closed tanks which have held flammable liquids until properly purged and tested, so that formation of an explosive atmosphere inside is impossible. The Safety and/or Fire Department will advise in this matter. If work is to be done on pipes, ducts, etc., any combustible insulation or inside deposits shall be removed.

10. EMERGENCY PROCEDURES

10.1. Emergency Ventilation and Building Containment

10.1a. References

1. F. T. Binford and T. H. J. Burnett, A Method for the Disposal of Volatile Fission Products from an Accident in the ORR, ORNL-2086 (August 2, 1956).
2. E 20310 ED 007 D Rev. 4, Electrical Schematic Containment, Heating and Ventilating, Sh. No. 1.
3. E 20310 ED 008 D Rev. 1, Electrical Schematic Containment, Heating and Ventilating, Sh. No. 2.
4. H 20462 EG 001 D Rev. 1, Exhaust System for Containment Plan, Section and General Notes.
5. H 20310 EG 005 D Rev. 0, Exhaust System for Containment and Connection at Bldg. - Plan and Details
6. H 20310 EG 006 D Rev. 0, Exhaust System for Containment - Details and Aletration to Exhaust Duct at Bldg. 3005.
7. H 20310 EG 007 D Rev. 0, Containment Pneumatic Control System - Schematic.
8. H 20310 EG 008 D Rev. 0, Pneumatic Control System - Piping Sh. No. 1.
9. H 20310 EG 023 D Rev. 0, Pneumatic Control System - Piping She. No. 2.
10. A 20309 EB 005 D Rev. 1, Containment Area - Plans and Sections.

10.1b. Introduction

To safeguard personnel and the property surrounding a reactor complex against radioactive contamination resulting from an incident occurring within the reactor building, the practice at ORNL has been to place a reactor building in containment when a potentially hazardous condition arises. (Containment is that condition when all air exhausted from the building leaves via a ventilation system which contains appropriate filter media, and all air entering the building is through leakage paths. In addition, all air-conditioning units, auxiliary ventilation systems, and exhauster units are shut down and all related louvers and dampers are closed.) This method of containment is used at the 2-Mw BSR. (See Section 7.2 for details on filtering specifications and requirements.)

10.1c. Description

Refer to Section 7.2c for a detailed description of the system.

10.1d. Controls for Building Containment

The building can be placed in containment either manually or automatically as indicated below:

1. Manual operation is effected by:
   a. By turning the "Test-Normal" switch (located on the west wall of the control room) to TEST (see Figure 10.1.1).
   b. By depressing the black-colored button on the ORR console (remote operation of BSR).
2. Automatic containment occurs ("Test-Normal" switch in NORMAL) when any one of the following conditions develops:
   a. Two Monitrons in the coincidence circuit of the facility radiation and contamination alarm system simultaneously indicate an increase in the radiation

Fig. 10.1.1. Controls for Building Containment

level to 23 mr/hr or when two continuous air monitors in the coincidence circuit indicate an increase in air activity to 4000 counts/min.

b. The high-bay radiation monitor indicates an increase in the radiation level to 150 mr/hr.

c. The radiation monitor outside the control room door indicates an increase in the radiation level to 12 r/hr.

d. The radiation monitor located in the duct (outside of building) indicates an increase in the radiation level to 50 mr/hr.

The "Test-Normal" switch should remain in NORMAL during normal operation. Since it is conceivable that situations could develop making containment desirable with the air-conditioning units that service the offices remaining in service, there are certain by-pass features incorporated in the design of this system. For example, if it is anticipated that handling a radioactive source will initiate containment, it would be desirable to "disable" the building evacuation features of the radiation monitoring system, requiring containment when the radiation monitors reach the high level but allowing the air-conditioning units in the office to remain in service. This may be accomplished by depressing the "by-pass" button on the control box. (It should be noted that depressing the "by-pass" button before containment is attained will result in immediate by-pass action; if it is depressed after containment is attained, there will be a 3-min delay before the air-conditioning units are energized.)

In order to return the building to normal status, the "Reset" button may be depressed and all Building 3010 air-conditioning units and exhauster units will be restarted after a 3-min delay. The louvers for the exhauster units will also be re-opened.

10.1e. Normal Operations - Procedures

As part of the requirements for operating the reactor, the containment system must be functioning as designed. To acknowledge this requirement on the reactor start-up checklist, do the following:

1. Observe the control box, located on the west wall of the control room, for the conditions listed below:
   a. The "Test-Normal" switch should be in the NORMAL position.
   b. The "Normal" light below the "Test-Normal" switch should be ON; the two lights to the right should be OFF.
2. Observe the readout for the cell-ventilation flow meter. The flow should be approximately 1600 cfm.
3. Check the continuous air monitor readouts in the pool area. Contamination levels should be normal.
4. Observe the monitors; the "Power On" lights should be ON.
5. Observe the facility radiation and contamination alarm system panel in the control room for any abnormal conditions (radiation levels higher than they should be, nitrogen pressure low for the gas-operated horns, inoperative lights, key switch not in NORMAL, etc.).
6. Observe the electrometer for the high-bay radiation monitor; the "Power On" lights should be ON.
7. Observe the electrometer for the radiation monitor in the cell-ventilation duct; the "Power On" light should be ON.

8. Observe the electrometer for the 12 r/hr radiation monitor located outside the control room; the "Power On" light should be ON.

If the building is placed in containment, either manually or automatically, the "Normal" lights on the control box (located on the west wall of the control room) will go out and the "In Containment" light will come on. The building air-conditioning units in the building will be shut down and the flow rate through the cell-ventilation system will increase from ~1600 cfm to ~4500 cfm.

Since there is no audio alarm calling attention to the fact that the building was placed in containment, a malfunctioning instrument may have initiated the action. If this is the case, the electrometers should be checked for possible abnormalities, such as gauge indicators spiking upscale intermittently). The area should also be checked for possible abnormalities.

If no adverse conditions exist, take the building out of containment and reset the instrumentation by depressing the "Reset" button on the control box. This will automatically energize the air-conditioning units after a 3-min delay.

If a hazardous condition has developed, the radiation and contamination alarm system instrumentation will, in all probability, be the first to initiate the containment. In this case, there would be audio alarms from the individual radiation monitors, the control room annunciators, and the evacuation horns. The action to be taken is as follows:

1. Scram the reactors.
2. Evacuate personnel from the building (refer to the evacuation procedures applicable to this reactor complex, Section 10.6).

3. With the assistance of a health physicist, evaluate the nature and seriousness of the incident if and when practical.

4. Notify the reactor supervisor and division superintendent of the status as soon as possible.

When the conditions are again favorable to allow re-entry into the building (radiation levels normal, no areas contaminated above tolerance), take the building out of containment by depressing the "Reset" button.

10.2. Emergency Electrical Power

10.2a. References

1. RC 15-1-15, Power Distribution Single Line Diagram
2. I 20310 QE 006 D-1 D-C, Schematic Diagram
3. E 20393 ED 043 D, 480-Volt, 3 Ø Emergency Service for 3010 Bldg.
4. E 20311 ED 001 D Rev. 3, Electrical One Line Diagram - Bulk Shielding Facility

10.2b. Introduction

In the event there is an interruption of TVA electrical power to the BSR, emergency electrical power from the ORR motor-generator unit will be supplied to most of the components in the reactor's instrumentation and control systems and to a number of auxiliary systems. Actually, the reactor may be operated at a power level of 1 Mw with all required components operating on electrical power supplied by the diesel-driven generator; however, it is doubtful that the reactor will ever be operated in this fashion (see Figure 10.2.1 for emergency power distribution).

10.2c. Description

Emergency electrical power is supplied to the BSR by a 350-kw, 410-v, 3-phase, 60-cycle, diesel-driven generator which also supplies emergency electrical power to the ORR. The diesel will start immediately when the line voltage drops to ~70% of normal; however, a time delay of 7 to 10 sec is experienced before the generator carries the full load. The diesel is started by 32-v DC motors. When normal TVA power is returned to ~90% of normal, the automatic transfer switch automatically returns power to the TVA supply (after about 30 sec).

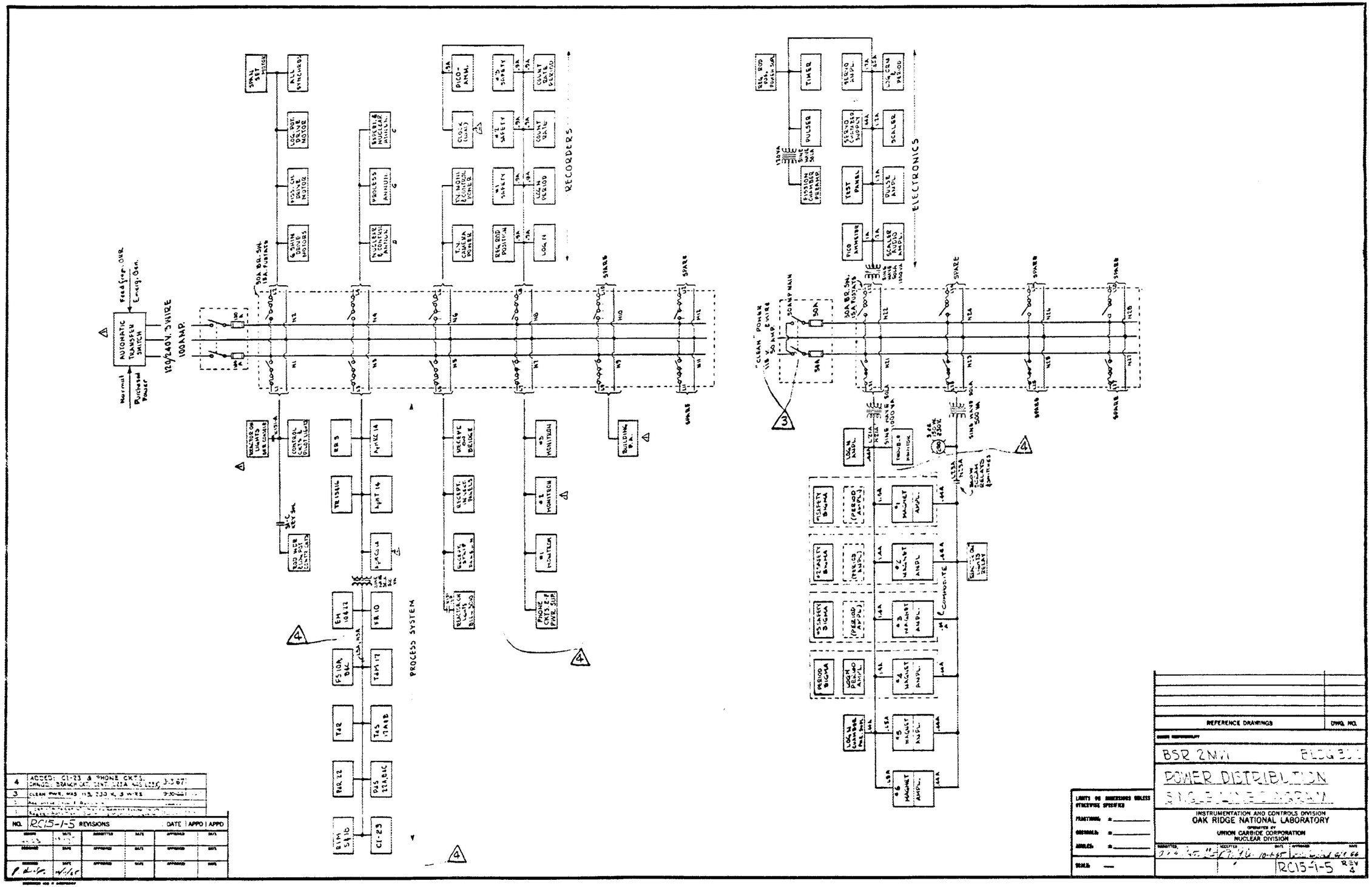

Fig. 10.2.1. Emergency Power Distribution

The emergency generator supplies electrical power (120/240 v, 100 amp) to the following:

1. All the control circuits and pilot lights.
2. All the nuclear instrumentation.
3. All the process instrumentation.
4. The television monitoring system.
5. The public-address system.
6. The facility radiation and contamination alarm system.
7. The communications system.
8. The electrical receptacles on the bridge and in the vertical panels in the control room and the strip in panel H (also in the control room).

The annunciation for the diesel is located in the ORR control room; this consists of five lights (mounted below the "Emergency Services" sign) and an audio alarm (the acknowledge button is at the rear of the panel). These lights, listed below, will brighten under the following circumstances:

1. Generator Running. - There has been either an interruption in TVA power to one of the above-mentioned facilities and the diesel has begun to operate automatically or the diesel has been started manually using the local controls.
2. Low Oil Pressure or High Water Temperature. - The diesel oil pressure is low or the water temperature is greater than 208° F.
3. Building 3042. - TVA power has been interrupted to the ORR building.

4. Building 3010. - TVA power has been interrupted to the BSR building.

5. MSR-GCR. - TVA power has been interrupted to the electrical components of this experiment facility.

The local controls for the diesel generator are located on the north wall of the diesel room. The controls are secured behind a Plexiglas locked box.

10.2d. Operational Procedures

If TVA power is interrupted to the BSR while the reactor is operating, the operating crew should check to see that the reactor has been shut down, that the seat lights are on, and that no abnormal condition is indicated by the control room instrumentation.

After the TVA power is restored, the following action should be taken:

1. Check the experiment notebook for any special startup instructions.

2. Return the reactor to the desired operating level in accordance with the requirements specified in Section 2.1h, "Return to Full Power Following an Electrical Power Outage".

3. When operating conditions have returned to normal, return the diesel generator to standby status as follows:

   a. Place the local control switch in the EMERGENCY STOP position.

   b. As soon as the engine has stopped, return the switch to the AUTOMATIC position so the diesel will be ready for the next emergency.

c. Lock the local control panel.

4. Reset the building containment.

5. Start the skimmer pump.

6. Start the demineralizer pump.

(Reiterating, the required complement of startup instruments do operate on emergency electrical power; hence, the reactor can be operated at a power level of 1 Mw. However, unless there are some special circumstances requiring operation of this nature, the reactor should remain shut down until TVA power is available.)

10.2e. Reliability Checks

The diesel-driven generator is tested weekly by personnel of the Plant and Equipment Division to assure starting reliability, and checks are made on critical components of the system; e.g., cooling system, oil system, ignition system, etc. The test consists of switching the toggle switch, located at the automatic transfer switch box at the ORR, from NORMAL to the TEST position. This action starts the diesel-driven generator. The toggle switch is then returned to the NORMAL position. After the diesel-generator has operated for one hour, the test is terminated by turning the switch on the control panel located on the north wall of the diesel-generator room from AUTOMATIC to EMERGENCY STOP. After the diesel has stopped, the switch must be returned to the AUTOMATIC position.

In addition to the weekly "start" runs, a 5-hr performance run is made during each of the end-of-cycle shutdowns. The purpose is to determine the reliability under emergency load conditions and to check the system for any malfunctioning components.

Routine shift checks are made to assure that the system is ready for an emergency. These checks consist of checking that the transfer box mode-switch is in NORMAL, that the control mode is in AUTOMATIC, and that the fuel valve on the top of the diesel engine is pointed west.

10.3. Emergency Shielding for the Reactor Pool

10.3a. Introduction

Provisions are made for alleviating a potential radiation hazard that could result in the bay area upon the loss of water from the reactor pool. Such a condition might be caused by a leak in the pool wall or a rupture in the water-cooling lines. Since there is no automatic make-up of water losses in the pool (i.e., due to evaporation), water must be added manually. (The volume of the BSR pool is ~300,000 gal.)

10.3b. Operational Procedures

If adverse conditions due to loss of water are eminent, the following steps should be taken:

1. Shut down the reactor if it is operating.
2. Add water from the 9000-gal. demineralized water storage tank in Building 3004. This is accomplished by opening valve C-1 located on the west side wall adjacent to the pool.
3. Immediately initiate efforts toward ascertaining the cause of the leak.
4. If the demineralized water supply is not adequate to compensate for the losses, allow process water to enter the pool. This is accomplished by opening the valve labeled "Process Water Valve" (this is also located at the west-side parapet, over the pool).

The demineralized water is, of course, preferable if the leak is not substantial; however, if the loss in pool water continues, process water should be used to minimize any potential radiation hazard.

10.4. Emergency Cooling

No forced cooling is required to remove the afterheat in the core following 2-Mw operation. In the event the cooling system fails while the reactor is being operated, the reactor would be scrammed automatically. (The flapper valve may be opened following a reactor shutdown to improve natural convection cooling; however, this is not a necessity.)

10.5. Emergency Services

10.5a. Introduction

When an emergency occurs, the person discovering the emergency is responsible for taking immediate action to protect personnel and property and bringing the emergency under control. This applies to fire, radiation, explosions, personal injury, or any other emergency and should be accomplished by one or more of the following methods:

1. Control the emergency single-handedly, if possible.
2. Telephone 3-6358 (Emergency Control Center) for help.
3. Actuate the nearest fire-alarm box.
4. Call the local emergency supervisor.
5. Call a local emergency squad member or anyone near.
6. Sound the building evacuation alarm, if necessary.
7. Meet and orient the emergency units.

When a call is received by the Emergency Control Center at 3-6358, the dispatcher immediately notifies the laboratory shift supervisor and dispatches the emergency service units needed (fire, guard, etc.).

10.5b. Fire Department

The Fire Department contains two sections--a fire-fighting section and a building-inspection section. The fire-fighting group is available at all times; the building-inspection group is available on the regular 8:00-4:30 shift.

The inspection group makes periodic inspections of Building 3010 and reports fire hazards to the building supervisor. Reactor Operations personnel can aid in fire prevention by reporting fire hazards to either the shift engineer or the Fire Department Inspection Group.

A fire may be reported to the Fire Department by telephone (call 3-6358) or by actuating the nearest fire-alarm box. If the telephone is used, the caller should state his name and badge number as well as his location and the type of fire. In either case, the person should remain in the area and direct Fire Department personnel to the fire.

Immediately after a fire extinguisher is used, a call should be made to the fire captain on duty, reporting the use of the fire extinguisher and the nature of the emergency. This will ensure that the fire extinguisher will be refilled and placed back in service for future emergencies.

Personnel of the Fire Department are equipped and trained to administer first aid. Rules for fire fighting:

1. Put out a small fire if you are sure you can, then call the Fire Department by phone.
2. Report all other fires to the Fire Department at once and sound the necessary alarm.
3. Direct the Fire Department to the scene.

10.5c. Guard Department

The Guard Department Headquarters is located in Building 2500. The main function of this department is plant security; however, many other services are performed by the department personnel. Plant employees can aid the guards in the performance of their duties by properly wearing the picture film badge and observing plant rules. The badge should be worn on the left side, in the shirt-pocket area.

The Guard Department works in conjunction with the Fire Department on fire alarms. Both departments have identical alarm code systems. Upon receiving a fire alarm by phone or fire-alarm box, the Fire Department

dispatcher will accompany the fire trucks to the emergency and the Guard Department dispatcher will operate the alarm code system until the fire dispatcher's return. Designated guards on all shifts are trained as auxiliary firemen. These men also have been trained in first aid.

Permits for the operation of plant vehicles are issued by the day-shift guard captain. Permits for operating vehicles up to a 3/4-ton truck will be issued upon presentation of a Tennessee state permit. To operate vehicles larger than the 3/4-ton truck, the department will give a driver's test.

The plant ambulance is operated by guards. In an incident in which ambulance service is needed, a phone call should be made to the Emergency Control Center, phone 3-6358. The ambulance driver will stop at the dispensary, and a nurse and/or doctor will accompany the driver to the emergency.

10.5d. Health Physics

The Health Physics Division has offices and personnel in Buildings 3001 and 3042 on the day shift, Monday through Friday. On the 4-12 and 12-8 shifts, holidays, and weekends, the Health Physics office is located near the west plant portal, Building 2016. At least two health physicists are on duty during each shift. If the health physicist cannot be located in his office, he can be paged by calling the Guard Department dispatcher (3-6646).

All calls to the Guard and/or Fire Department include an almost simultaneous summons of the health physicist, who must monitor the area for any radiation or contamination hazards.

10.5e. Dispensary

The Health Division's main dispensary is located in Building 4500, Wing 5. The division is staffed with doctors and nurses. Field offices are located in Buildings 2418, 7009, and 4500. The field offices, with one nurse on duty at each office, are open Monday through Friday on the day shift. The main dispensary is always open. However, only one nurse is on duty on the 4-12 shift, holidays, and weekends; and there are only limited services on the 12-8 shift.

Services of the dispensary can be received at any time; however, an appointment must be made to obtain a doctor's services, except in case of an emergency. In case of an injury, regardless of how slight, the employee must report to the Health Division for treatment.

10.5f. Maintenance

For emergency maintenance, arrangements may be made for immediate repairs by each reactor supervisor. For emergency maintenance during hours other than the normal 8:00 to 4:30 week days, the laboratory shift supervisor will be notified of the situation and he will make the necessary arrangements for calling in the proper personnel.

NOTE: If either the air-horn or public-address building evacuation system fails, it must be repaired promptly; because failure of the second before repairs are made to the one already out of service requires that the building be evacuated until repairs can be made.

10.6. Evacuation Procedures

10.6a. Emergency Personnel

1. Building 3001

a.	Local emergency supervisor	ORR Supervisor
b.	Warden	Operations Shift Engineer
c.	Searchers	Reactor Operators

2. Building 3004 and 3005

a.	Local emergency supervisor	ORR Supervisor
b.	Warden	Operations Shift Engineer
c.	Searchers	Reactor Operators

3. Building 3010

a.	Local emergency supervisor	BSR Supervisor
b.	Warden	Operations Shift Engineer
c.	Searchers	Reactor Operators

4. Building 3042

a.	Local emergency supervisor	ORR Supervisor
b.	Warden	Operations Shift Engineer
c.	Searchers	Reactor Operators

In the absence of the designated individual listed above, the duties described in this section will devolve to the next individual in the line organization. In the event this individual is the Operations shift engineer, he will discharge the duties of this position (in addition to those of warden) until relieved by higher authority.

10.6b. Responsibilities of Emergency Personnel[1]

An emergency squad consists of a local emergency supervisor, wardens,

[1] ORNL Emergency Manual, 1961.

searchers, and other squad members. The responsibilities of each are outlined below:

1. <u>The Local Emergency Supervisor</u>

   a. Organizes and trains the local emergency squad and plans for its use in handling the various types of anticipated emergencies always ensuring that the local plans are consistent with the overall Laboratory plans.

   b. In the event of a local emergency, directs his squad and ensures that:

      (1) Personnel have been evacuated from the affected area.

      (2) The Emergency Control Center has been notified.

      (3) Emergency service units are met, briefed on the situation, and directed to the scene.

      (4) Equipment and processes are shut down as necessary for safety.

      (5) The Laboratory emergency director is kept advised of the status of the emergency and of any needed assistance.

      (6) Additional manpower is secured if needed.

   c. In the event of a Laboratory-wide emergency, complying with the instructions of the Laboratory emergency director, which may include:

      (1) Evacuation of personnel.

      (2) Shutting down of process and building equipment.

      (3) Assembling his local emergency squad and dispatching it as directed.

2. The Wardens

   a. Sound the local evacuation alarm.

   b. Direct employees from the emergency area to the local assembly point.

   c. Prevent re-entry.

   d. Check the safety of the assembly point and move it if necessary.

   e. Account for all employees in his area after an evacuation.

   f. Have employees monitored for radioactivity, if the need is indicated, before dismissing them.

   g. Direct employees to other assembly points as instructed over the public-address system.

3. The Searchers

   a. Search all areas of the building to make sure all employees have evacuated.

   b. Assist the wardens.

4. Other squad members

   a. Notify or summon assistance from the proper emergency service unit.

   b. Meet and orient the emergency service unit when it arrives.

   c. Make the necessary operational changes.

   d. Combat the emergency as required.

10.6c. Laboratory Emergency Signals

1. General Alert Signal. - On a general alert, the signal will come from the fire-alarm system. This will be in the form of Box 14 sounded four times followed by the fire alarm box nearest the

location affected. (This signal is sounded for second alarm fires as well as for general alert conditions.)

2. Laboratory Evacuation Signal. - On a Laboratory evacuation, the signal will be a 30-sec warbling siren-like wail over the Laboratory-wide Bell Telephone public-address system, followed by verbal instructions.

3. Other Signals. - Other emergency signals are transmitted via the fire-alarm system; however, only two of these might involve Reactor Operations Department personnel. Box 11 sounded four times signifies an "all clear" condition. Box 12 sounded one time signifies that a "box test" is being conducted.

10.6d. Laboratory Evacuation (Emergency Outside the Department Area)

If an emergency requiring a plant-wide evacuation occurs outside the Reactor Operations Department area, personnel will be notified as indicated in Section 10.6c, above. The following action will be taken:

1. Operations personnel (either the warden or local emergency supervisor) will:

   a. Scram the reactors (if they are operating).

   b. Report the situation to all building occupants over the public-address system.

   c. Initiate a building evacuation.

   d. Select deputy searchers, if required, from the Reactor Operations Department personnel in the area assembly point (on Reactor Drive between Buildings 3001 and 3042).

   e. Dismiss all other department personnel and direct them to evacuate the Laboratory.

f. After assessing the situation, the building may be searched for people who have not exited.

2. Operations Personnel (General)

a. Leave the building via the most convenient exit. (If a department member is in, or adjacent to, a reactor control room at the time the evacuation is initiated, he should take the emergency package with him when he leaves the building.)

b. Assemble at the department area assembly point (on Reactor Drive between Buildings 3001 and 3042) for possible selection as a deputy searcher.

c. Comply with instructions from local emergency personnel.

3. Other Personnel in a Reactor Operations Department Building:

a. Leave the building immediately via the most convenient exit.

b. Proceed to the nearest exit from the Laboratory unless otherwise directed via the Laboratory-wide public-address system.

10.6e. Local Area Evacuation (Emergency Outside the Department Area)

If an emergency requiring a local area evacuation occurs outside the Reactor Operations Department, the local emergency supervisor (or warden) will be notified by the Laboratory emergency director or by other responsible departments. (This notification may be received initially by the reactor control desk operator who will immediately contact the responsible local emergency supervisor or warden.)

1. Operations personnel (either the warden or local emergency supervisor, for each building) will:

a. Scram the reactors (if they are operating).

b. Report the situation to all building occupants over the public-address system.

c. Initiate a building evacuation.

d. Assemble his local emergency squad and all building occupants at the local assembly point. Determine that the assembly point is in a safe area. Move to a secondary assembly point, if necessary.

e. Appoint a squad member as temporary warden. Go to the department area assembly point (on Reactor Drive between Buildings 3001 and 3042) and select deputy searchers, if required, from the Reactor Operations Department personnel who have assembled there.

f. Dismiss all department personnel not selected and direct them to evacuate the area and wait for further instructions via the Laboratory-wide public-address system.

g. After assessing the situation, the building may be searched for people who have not exited.

h. Wait for further instructions from the Laboratory emergency director via the Laboratory-wide public-address system.

2. <u>Operations Personnel (General)</u>

a. Leave the building via the most convenient exit. (If a department member is in, or adjacent to, a reactor control room at the time the evacuation is initiated, he should take the emergency package with him when he leaves the building.)

b. Assemble at the local assembly point for possible selection as a deputy searcher.

c. Those individuals not selected should report to the department assembly point for possible service at the other reactors.

d. Comply with instructions from local emergency personnel.

e. Wait for further instructions from the Laboratory emergency director via the Laboratory-wide public-address system.

3. Other Personnel in Department Buildings

a. Leave the building by the most convenient exit.

b. Assemble at the local assembly point.

c. Comply with instructions from local emergency personnel.

d. Wait for further instructions from the Laboratory emergency director via the Laboratory-wide public-address system.

Since conditions associated with an emergency outside the reactor buildings may vary considerably, the instructions one would be advised to follow may vary accordingly. It is conceivable that under certain circumstances the instructions in this section, pertaining to building evacuation, perhaps would not be the wisest to follow. An example of this would be an occurrence of an incident in another part of the Laboratory in which air-borne activity released into the atmosphere would present a potential health hazard to personnel inside the reactor buildings (by virtue of the negative pressure inside of the buildings) but would present a greater hazard if the personnel were to leave the buildings.

In a case such as this, the local emergency supervisor (or warden) would have received information of the incident from the Laboratory emergency director. At this time, the local emergency supervisor (or warden) for each building should perform the following in the order listed.

1. Scram the reactor (if it is operating).
2. Announce over the building public-address system: "Attention! All personnel remain inside the building until further notice. The oustide air has become slightly contaminated as a result of an incident in another area. Personnel in the immediate area who are outside the containment volume would be advised to enter."
3. Monitor the building continuous air monitors frequently.

When the condition of the outside air is no longer considered to represent a hazard (as determined by the Laboratory emergency director), the information should be announced over the building's public-address system and normal operations should be resumed as soon as possible.

10.6f. Special Emergency Evacuation Procedure for Building 3001

A portion of the ORNL Graphite Reactor (now a National Historic Landmark) has been opened to the public and connected to a special visitors' parking lot on the north side of the Laboratory by a fenced walkway. This allows the general public to visit the OGR during certain hours without passes or advance notice. The OGR is near the ORR and the Pilot Plant as well as other process buildings of the Laboratory. The following procedure will be used for evacuating OGR visitors if any emergency elsewhere in the Laboratory should make this desirable.

1. Responsibility. - The operating crew at the ORR will be responsible for evacuating the visitors from the area. The two general categories of occurrences that might require evacuation of the OGR are:

   a. A major incident at the ORR.

   b. A major incident elsewhere in the Laboratory which would require evacuation of the area including the Graphite Reactor.

   In the first type of incident the shift engineer will make the decision to evacuate the OGR. If an evacuation is necessary due to an incident in another part of the Laboratory, the decision will be made at the Emergency Control Center and the shift engineer will receive instructions accordingly. When the decision to evacuate the people from the visitors' access area is made, a decision must also be made as to which route to take--north via the pathway by which the visitors entered or south through the Laboratory.

2. Procedure. - Since an evacuation could occur on a holiday or weekend, the crew on duty at the ORR area might consist of three people: the shift engineer and two reactor operators.

   a. Evacuation Southward. - If it is necessary for the visitors to go south through the Laboratory, two men will enter Building 3001 through the east door and pass through the emergency door on the right into the public area. This door is equipped with a panic bar on each side and with a switch to initiate an alarm at Guard Headquarters when the

door is opened in either direction. Also, the Guard Department has placed an official seal on the door so that visual inspection will reveal whether it has been opened. One of the two men will go northward along the fenced walkway to the parking lot, directing any visitors along the pathway to return to the north parking lot. He will close the gate and do whatever is necessary for the safety of the group, including having checks made by a health physicis surveyor if this seems desirable. The other man will direct all visitors in the building through the emergency exit as rapidly as possible. He will accompany the group to one of the Laboratory gates where he will determine whether a health physics survey should be made. He will attempt to obtain transportation to the north parking lot where the visitors' cars will be parked and do whatever is possible for thier safety and comfort. The Emergency Control Center should be notified of the completion of the evacuation and asked for further instructions. If any problem should arise requiring additional assistance, the Emergency Control Center should be called immediately.

b. Evacuation Northward. - If the decision is to evacuate northward, one man (usually a reactor operator) will enter the visitor area by the route noted above and evacuate all visitors from the building as quickly as possible via the access pathway. As the visitors leave, the operator should

follow them, giving any assistance that is needed. When this group leaves the north gate, the operator will close the gate and do whatever is necessary for the safety of the group. If radiation and contamination conditions are suspected, the visitors should be instructed to remain at the gate until a health physics surveyor can be called to check for possible contamination. The emergency Control Center should be notified of the completion of the evacuation and asked for further instructions. If any problem should arise requiring additional assistance, the Emergency Control Center should be called immediately.

10.6g. Building Evacuation - Emergency in Buildings 3004 and 3005

Emergency evacuations of Building 3005, for the purpose of this procedure, are divided into two classes. Class one evacuations are those that are automatically started by instrumentation. Class two evacuations are those initiated manually.

The suggested course of action for the local emergency supervisor (or warden) is given below. The reader should understand that it is not possible to provide a procedure which will apply in full for every condition which could arise. Rather, sound guidelines based on experience are provided. The proper execution of emergency procedures under actual conditions rests with well-trained and experienced personnel.

1. Class One Evacuation, Instrument Initiated. - An instrument-initiated (automatic) evacuation may be caused by: high air-activity indications at two continuous air monitors in the air contamination coincidence circuit, or high radiation indications

at two of the Monitrons in the Monitron coincidence circuit. Building containment is also automatically effected under these conditions.[1]

If the evacuation signal is initiated automatically, a sudden increase in the air activity or radiation background within the building would be suspected since a gradual increase would usually have been detected by various low-level monitors and would have prompted a manually initiated evacuation. The following steps are suggested.

NOTE: It is assumed that all personnel will evacuate the 3005 containment shell upon actuation of the evacuation signal.

a. If time permits, the situation or conditions should be announced over the public-address system while depressing the silence button for the evacuation horn. This announcement will help to make it possible for others to assist in combating the emergency.

b. The Emergency Control Center, phone 3-6358, should be notified of the magnitude and cause of the emergency.

c. Re-entry of the containment shell by searchers or other personnel (for radiation surveys, etc.) will be directed by the local emergency supervisor if safe and/or necessary; and such re-entry will, whenever possible, follow the health physics procedures and recommendations.

The local emergency supervisor will combat the emergency until relieved by higher authority.

---

[1] J.A. Russell, Jr., and D.J. Knowles, Description of Facility Radiation and Contamination Alarm Systems Installed in the Low-Intensity Test Reactor, Building 3005, ORNL TM-1460 (Feb. 28, 1966).

2. Class Two Evacuation, Manually Initiated. - An emergency condition, other than a suddenly occurring radiation or air-contamination incident, will usually develop at a rate which will permit some pre-evacuation planning, however limited. This type of emergency would include a pending or potential high-radiation or air-contamination level, a fire, or a release of undesirable gas into the building atmosphere.

The local emergency supervisor (or, in his absence, the control-room operator) will generally be forewarned of increasing radiation or air-contamination levels through the radiation and contamination alarm system. The control-room operator will notify the shift engineer of radiation and/or contamination alarms as they occur.

Automatic early warning regarding fire, gas leaks, or other emergency conditions is not probable; however, such emergency conditions may not require the haste usually associated with an automatically announced radiation or air-contamination incident. It should be recognized that it is not the intent of this procedure to minimize the hazards associated with fire. Rather, the point to be made is that the fire danger to equipment and materials is much greater than the fire danger to personnel.

a. Upon receipt of information regarding an emergency condition which warrants an evacuation, the local emergency supervisor or his alternate will, if time permits, announce the condition over the public-address sytem.

b. The local emergency supervisor or his alternate will then actuate the evacuation horn, interrupting the signal

after 10 sec to announce the condition again and give pertinent directions to evacuating personnel. (Actuation of the evacuation signal places the building in containment.) NOTE: Steps a and b can be accomplished from the ORR control room.

c. The local emergency supervisor or his alternate will notify the Emergency Control Center (phone 3-6358) of the emergency condition (if this has not been done previously). In case of fire, he will actuate the nearest fire-alarm box.

d. The local emergency supervisor or his alternate will continue to combat the emergency.

3. All Evacuations, Extended Conditions

a. If the local emergency supervisor deems it necessary, he will initiate the evacuation plan for Buildings 3001, 3010, and 3042.

b. For a more serious emergency, the local emergency supervisor or his alternate will recommend to the Emergency Control Center that the entire Laboratory be evacuated. If such be the case, further instructions will be announced over the plant-wide public-address system.

10.6h. Building Evacuation Emergency in Building 3010

Emergency evacuations of Building 3010, for the purpose of this procedure, are divided into two classes. Class one evacuations are any evacuations automatically started by instrumentation. Class two evacuations are evacuation initiated manually.

The suggested course of action for the local emergency supervisor (or warden) is given below. The reader should understand that it is not possible to provide a procedure that will apply in full for every condition which could arise. Rather, sound guidelines based on experience are provided. The proper execution of emergency procedures under actual conditions rests with well-trained and experienced personnel.

During any emergency in Building 3010, use should be made of the indications of radiation level displayed on the "12 r/hr monitor" meter and on the "High Bay Monitron" meter; both of these meters are located at the BSR remote console.

1. Class One Evacuation, Instrument Initiated. - An instrument-initiated (automatic) evacuation may be caused by: high air-activity indications at two continuous air monitors in the air contamination coincidence circuit, or high radiation indications at two of the Monitrons in the Monitron coincidence circuit. Building containment is also automatically effected under these conditions.[2]

   If the evacuation signal is initiated automatically, a sudden increase in the air activity or radiation background within the building would be suspected since a gradual increase would usually have been detected by various low-level monitors and would have prompted a manually initiated evacuation. The following steps are suggested.

---

[2] J.A. Russell, Jr., and D.J. Knowles, Description of Facility Radiation and Contamination Alarm Systems Installed in the Bulk Shielding Facility, Building 3010, ORNL TM-1874 (August 22, 1967).

(NOTE: It is assumed that all personnel will evacuate the Building 3010 containment shell upon actuation of the evacuation signal.)

a. Shut down the BSR and PCA (if either is operating).

b. If time permits, the situation or conditions should be announced over the public-address system while depressing the silence button for the evacuation horn. This announcement will help to make it possible for others to assist in combating the emergency.

c. The Emergency Control Center, phone 3-6358, should be notified of the magnitude and cause of the emergency.

d. Re-entry of the containment shell by searchers or other personnel (for radiation surveys, etc.) will be directed by the local emergency supervisor if safe and/or necessary; and such re-entry will, whenever possible, follow the health physics procedures and recommendations.

The local emergency supervisor will combat the emergency until relieved by higher authority.

2. Class Two Evacuations, Manually Initiated. - An emergency condition, other than a suddenly occurring radiation or air-contamination incident, will usually develop at a rate which will permit some pre-evacuation planning, however limited. This type of emergency would include a pending or potential high-radiation or air-contamination level, a fire, or a release of undesirable gas into the building atmosphere.

The local emergency supervisor (or, in his absence, the control-room operator) will generally be forewarned of increasing

radiation or air-contamination levels through the radiation and contamination alarm system. The control-room operator will notify the shift engineer of radiation and/or contamination alarms as they occur.

Automatic early warning regarding fire, gas leaks, or other emergency conditions is not probable; however, such emergency conditions may not require the haste usually associated with an automatically announced radiation or air-contamination incident. It should be recognized that it is not the intent of this procedure to minimize the hazards associated with fire. Rather, the point to be made is that the fire danger to equipment and materials is much greater than the fire danger to personnel.

a. Upon receipt of information regarding an emergency condition which warrants an evacuation, the local emergency supervisor or his alternate will, if time permits, announce the condition over the public-address system.

b. The local emergency supervisor or his alternate will then actuate the evaucation horn, interrupting the signal after 10 sec to announce the condition again and give pertinent directions to evacuating personnel. (Actuation of the evacuation signal places the building in containment. NOTE: Steps a and b can be accomplished from the ORR control room as well as from the BSR.)

c. The local emergency supervisor (or the warden) will shut down the BSR should he deem such action necessary or helpful

toward combating the emergency. (PCA shutdown will be required in any case.)

d. The local emergency supervisor or his alternate will notify the Emergency Control Center (phone 3-6358) of the emergency condition (if this has not been done previously). In case of fire he will actuate the nearest fire-alarm box.

e. The local emergency supervisor or his alternate will continue to combat the emergency.

3. All Evacuations, Extended Conditions.

a. If the local emergency supervisor deems it necessary, he will initiate the evacuation plan for Buildings 3001, 3004, 3005, and 3042.

b. For a more serious emergency, the local emergency supervisor or his alternate will recommend to the Emergency Control Center that the entire Laboratory be evacuated. If such be the case, then further instructions will be announced over the plant-wide public address system.

10.6i. Building Evacuation--Emergency in Building 3042

Emergency evacuations of Building 3042, for the purpose of this procedure, are divided into two classes. Class one, instrument-initiated evacuation, includes any evacuation automatically started by instrumentation. Class two, manually initiated evacuation, includes evacuation initiated manually from the control room or from the emergency box outside the northwest personnel door.

The suggested course of action for the local emergency supervisor or, in his absence, the control desk operator is given below. The reader

should understand that it is not possible to provide a procedure which will apply in full for every condition which could arise. Rather, sound guidelines based on past experience are provided. The proper execution of emergency procedures under actual conditions rests with well-trained and experienced personnel.

1. Class One Evacuation, Instrument Initiated. - An instrument-initiated (automatic) evacuation may be caused by: high air-activity indications at two continuous air monitors in the air-contamination coincidence circuit, or high-radiation indications at two of the Monitrons in the Monitron coincidence circuit. Building containment is also automatically effected under these conditions (see Operating Manual for the Oak Ridge Research Reactor, TM-506, Section 9.2, Facility Radiation and Contamination Alarm System, Building 3042). If the evacuation signal is initiated automatically, a sudden increase in the air activity or radiation background within the building would be suspected since a gradual increase would usually have been detected by various low-level monitors and would have prompted a manually initiated evacuation. The following steps are suggested.

   (NOTE: It is assumed that all personnel will evacuate the Building 3042 containment shell upon actuation of the evacuation signal. The local emergency supervisor may elect to evacuate to the control room if his position within the containment shell is favorable.)

a. If the evacuation signal is accompanied by an alarm from the control room high-level radiation monitor (>5 r/hr), then the control room operator (warden) should scram the ORR (and any other reactor being operated from this control room) and evacuate the control room, taking the emergency equipment package with him if possible.

b. If the radiation level in the control room is less than 5 r/hr, then the local emergency supervisor or, in his absence, the control room operator (warden) should survey the instrumentation to determine:

(1) Radiation and air-contamination levels in the control room (from the control room radiation monitor and continuous air monitor).

(2) The cause of the evacuation signal, i.e., high-level signals from two Monitrons or two continuous air monitors or both (from the radiation and contamination alarm system panel).

(3) The condition (radioactivity) of the reactor and pool systems as reflected by the reactor and pool water activity recorders and the ^{16}N recorders.

c. Emergency action to be taken after the above listed information is gathered must be decided upon by the local emergency supervisor or his alternate; however, decisions must be made quickly and, therefore, the following guidelines are offered.

(1) If it is suspected that the operating reactor is contributing to the condition, then the ORR should be shut down.

(2) If time permits, the situation or conditions should be announced over the public-address system while depressing the silence button for the evacuation horns. This announcement will help to make it possible for others to assist in combating the emergency.

(3) The Emergency Control Center, phone 3-6358, should be notified of the magnitude and cause of the emergency.

(4) If radiation or air-contamination levels in the control room are sufficiently high, or are increasing rapidly, the ORR and any other reactor being operated from this control room should be scrammed and the control room evacuated.

(5) If, however, radiation and air-contamination levels in the control room are not excessively high, the local emergency supervisor can use the control room as a base from which to direct action toward correcting the emergency situation.

(6) Re-entry of the containment shell by searchers or other personnel (for radiation surveys, etc.) will be directed by the local emergency supervisor if safe and/or necessary; and such re-entry will, whenever

possible, follow health physics procedures and recommendations.

d. The local emergency supervisor will combat the emergency until relieved by higher authority.

2. Class Two Evacuation, Manually Initiated. - An emergency condition, other than a suddenly occurring radiation or air-contamination incident, will usually develop at a rate which will permit some pre-evacuation planning, however limited. This type of emergency would include a pending or potential high-radiation or high air-contamination level, a fire, or a release of undesirable gas into the building atmosphere.

The local emergency supervisor or, in his absence, the control-room operator (warden) will generally be forewarned of increasing radiation or air-contamination levels through the radiation and contamination alarm system. The control-room operator will notify the shift engineer of radiation and/or contamination alarms as they occur.

Automatic early warning regarding fire, gas leaks, or other emergency conditions is not probable; however, such emergency conditions may not require the haste usually associated with an automatically announced radiation or air-contamination incident. It should be recognized that it is not the intent of this procedure to minimize the hazards associated with fire. Rather, the point to be made is that the fire danger to equipment and materials is much greater than the fire danger to personnel.

a. Upon receipt of information regarding an emergency condition that warrants an evacuation, the local emergency supervisor or his alternate will, if time permits, announce the condition over the public-address system.

b. The local emergency director or his alternate will then actuate the evacuation horn, interrupting the signal after 10 sec to announce the condition again and give pertinent directions to evacuating personnel. (Actuation of the evacuation signal places the building in containment. NOTE: Steps a and b can be accomplished from the emergency microphone box outside the northwest personnel door.)

c. The local emergency supervisor or, in his absence, the control desk operator (warden) will shut down the ORR (and any other reactor being operated from this control room) should he deem such action necessary or helpful toward combating the emergency. However, if the situation permits, local operation at the other reactor should be initiated.

d. The local emergency director or his alternate will notify the Emergency Control Center (phone 3-6358) of the emergency condition (if this has not been done previously). In case of fire, he will actuate the nearest fire-alarm box.

e. The local emergency supervisor or his alternate will continue to combat the emergency, operating from the control room as long as conditions permit.

3. All Evacuations, Extended Conditions.

   a. If the local emergency supervisor deems it necessary, he will initiate the evacuation plan for Buildings 3001, 3004, 3005, and 3010.

   b. For a more serious emergency, the local emergency supervisor or his alternate will recommend to the Emergency Control Center that the entire Laboratory be evacuated. If such be the case, then further instructions will be announced over the plant-wide public-address system.

10.6j. Response to Air Attack Warnings

If the Laboratory receives information concerning an air attack of any type, a 30-sec, continuous, siren-type sound will be broadcast from the plant-wide public-address system. The Laboratory emergency director will then broadcast on the public-address system any instructions that are necessary for the protection of Laboratory employees.

The directions given will depend upon the situation and will give the individual the option of evacuating the ORNL area or taking cover. In either event, operations at the reactors will cease. The following steps should be taken by each control-desk operator, assuming that each reactor is operating.

1. Scram the reactors.
2. Sound the evacuation horns. The buildings will automatically be placed in the containment mode.
3. Shut down all pumps of the following types:
   a. Reactor secondary water pumps.
   b. Reactor primary water pumps. (Do not shut off any battery-driven motors.)

c. Pool secondary water pumps.

d. Pool primary water pumps.

4. Shut off all cooling-tower fans.

5. Silence the evacuation horn and make an announcement on the building public-address system concerning the situation.

6. Leave the building or take cover, as is decided at the time.

If employees are instructed to leave the buildings, they should take with them portable, radiation-detection instruments for use in any emergency which may ensue. If the reactor is down at the time of the warning, the work should cease immediately; and the employees should take the indicated steps to preserve their safety.

10.6k. Evacuation Procedure Drills

Each crew, while on the 12-8 shift, will test one of the emergency procedures. The procedures will be chosen for drill on a rotating basis so that all local emergency personnel remain well trained in their duties.

Laboratory-wide evacuations will be scheduled often enough to keep the remainder of the people acquainted with the procedures.

11. AUXILIARY EQUIPMENT

11.1. Reactor-Bay Crane

11.1a. Introduction

An overhead crane is provided in the bay area for the moving of heavy objects, such as carriers and various equipment.

11.1b. Description

The tracks of the bridge run in the north-south direction and are supported by the building structural members. The hoist has a load limit of 15,000 lbs. The travel speed for the crane is as follows:

Direction	Slow Travel	Fast Travel
Forward	8 in./sec	2 ft/sec
Reverse	1 ft/sec	2 ft/sec
Left or right	4 in./sec	1 ft 2 in./sec
Raise or lower	3 in./sec	4 in./sec

11.1c. Responsibility

Each supervisor in charge at the BSR is responsible for the proper use of the crane. He should be assured that only competent personnel operate the crane and that the operational precautions listed below are followed. A safety check of the crane by the Plant and Equipment Division in accordance with Safety Code ASAB 30.2 will be performed on an annual basis.

11.1d. Operational Precautions

1. Only qualified personnel are permitted to operate the crane.
2. Any operation of the crane in or over the pool must be by Operations personnel or by qualified "crane operators". If by a crane operator, the operation must be under the surveillance of Operations personnel.

3. A loaded crane should never be moved over the BSR or PCA. Whenever it is desirable to transfer a "load" via the crane, it should be routed around the pool rather than over it--except by special permission of the BSR supervisor.
4. When approaching the "stops", cease all movement about 12 in. from the "stops" then continue the movement with an inching motion.
5. Always visually inspect the cable and cable drum to ensure proper tracking of the cable.
6. Never overload the cranes. The load limits are as follows: 15,000 lbs on the overhead crane and 40,000 lbs on the spectrometer crane.
7. Before any carrier is lowered into the pool, the lifting device must be approved by the BSR supervisor.
8. All lifts should be made in the vertical plane, if possible, to ensure proper tracking of the cable on the cable drum.
9. Prior to using the crane for lifting fuel and/or fuel racks, a "checkout" should be made on the overhead crane controls to ensure proper operation. The check is as follows:
   a. Press the "stop" button.
   b. Attempt to raise and lower the crane hook. If the system is in order, no action of the crane should result.
   c. If the system is in order, press the "start" button and proceed.
   d. If the system is not in order, discontinue its use and report the condition to the BSR supervisor.

10. When lifting irradiated fuel, always post a man at the crane switch box located on the east wall next to the northeast corner of the pool.

11.2. Scintillation Counter

11.2a. Introduction

The scintillation counter is an instrument used to count the number of nuclear disintegrations occurring in a sample of some material. In the particular case of concern here, it is a one milliliter sample of water taken from the reactor primary water system, the reactor secondary system, the reactor demineralizer system, or various sumps. These samples are counted for one minute and the data are logged in the back section of the BSR daily log. Operations supervision is responsible for inspecting these routine entries for the purpose of detecting any possible deviations or trends from the normal. (This instrument is located in the basement of the ORR and services the ORR-BSR complex.)

11.2b. Precautions

The following precautions should be acknowledged:

1. Wipe the outside of the test tube containing the sample with a tissue and avoid spilling any of the sample in the counting well; any contamination will result in erroneous data.
2. Maintain an accurate record of the background counts and the calibration factor. (A clipboard is located at the counter for these data.)
3. Should the background increase appreciably (more than +7% from the average of previous five measurements), it is most likely that the well has become contaminated. If so, it should be decontaminated immediately. (In most cases, wiping with a piece of damp cheesecloth is sufficient for decontamination of the well.)

11.2c. Voltage Adjustments

Under normal circumstances the power to the equipment will remain on. This is to ensure stabilization of the high-voltage supply. Usually, the equipment will not require adjustments, except for perhaps a monthly high-voltage check to ensure that operation is within the plateau region of the counter.

This plateau region will be determined on a monthly basis. The method of plateau determination will be to take a series of one-minute counts at various high-voltage settings. A curve of counts/min vs voltage can then be plotted and the plateau will be the flat part of the curve. The high voltage should be set midway on the plateau. To turn the power on:

1. Turn the high-voltage power supply to H.V.
2. Increase the high-voltage control slowly, starting at position A, until the desired level is obtained.
3. The desired operating voltage will be determined in the manner described above.

11.2d. Calibration

As is the case for all types of counting equipment, this unit must be calibrated to give an absolute measurement. This is accomplished by using the cesium source, with a calibration supplied by the Analytical Chemistry Group, as a standard.

To determine the calibration factor:

1. Insert the cesium standard into the counter well.
2. Replace the lead plug shield which reduces background radiation.
3. Reset the timer; reset the total-count register.

4. Take a one-minute count by using the counter "on-off" switch.
5. Record the data. The total count register may be set on any one of the following scales: 16, 64, 256, or 1024. To obtain a total count, the register count must be multiplied by the scale factor and the neon light count added to the scale count.
6. Remove the cesium standard; replace the lead plug.
7. Reset the timer; reset the total-count register.
8. Take a one-minute count for general background.
9. Record the data and obtain the counts per minute by multiplying the total counts on the register by the scale and then adding the number of lights.
10. The total count obtained in Step No. 9 is due to background and should be subtracted from the number obtained in Step No. 5 to give the net counts due to the cesium standard.
11. The current value of the standard is obtained by taking the decay factor and multiplying it by the initial value of the standard as indicated on the standard for aluminum absorber.
12. After the current value has been determined, it should be divided by the net count obtained in Step 10. This will give the calibration factor to be used.

11.2e. Sample Preparation

In preparing the water samples for counting, observe the following procedures:

1. Using the scintillation sample tube; place 1 ml of water in the tube.
2. Place a cork stopper in the tube.

3. Label each tube to ensure proper identification of samples.
4. Dry each sample tube with facial tissue before placing it in the counter well.
5. Maintain the following sample decay time on the various water systems prior to counting.
   a. LITR, BSR, and ORR water sample - twenty minutes.
   b. The Graphite Canal and samples from the process and intermediate-level-waste systems require a specific delay or decay time prior to being counted.

11.2f. Counting

The counting procedure is as follows:

1. Determine the calibration factor.
2. Insert the sample into the well of the counter.
3. Reset the timer; reset the total-count register.
4. Turn the counter on and count for one minute.
5. Subtract the background count, which is posted on the scaler, from the counts obtained in step 4 above.
6. Multiply the count obtained in step 5 by the calibration factor posted on the scaler to give the counts min^{-1} ml^{-1}.
7. Record the results in their respective places--clipboard, log-book, etc.

11.3. The Beckman pH Analyzer

11.3a. Introduction

The acidity of the reactor water systems is monitored once each shift by obtaining samples and determining their pH with the analyzer located in the pump house.

11.3b. Description

1. Push Buttons. - The principal operational functions of the "Zeromatic" are controlled by six push buttons on the front panel of the instrument. These push buttons actually constitute two switches, providing a convenient means of selecting functions of the instrument, controlling the relationship of the electrodes to the input of the instrument, and placing the "Zeromatic" amplifier in operation for pH determinations or millivolt measurements.

   The two electrode push buttons (marked "Standby" and "Read") are interlocked; depressing either of these automatically releases the other. These push buttons control the relationship of the electrodes to the input of the instrument and the operation of the relay in the "Zeromatic" circuit.

   The four remaining push buttons, grouped in pairs under "pH Temp Comp" and "Millivolts", are interlocked and provide a means of selecting the function of the instrument. The "pH Temp Comp" push buttons offer choice of manual temperature compensation ("Man") or automatic temperature compensation ("Auto").

The two "Millivolt" push buttons offer a choice between a 700-0-700-millivolt span (±700 push button) and a 1400 millivolt span (1400 push button). When the 1400 push button is depressed, zero may be set at any desired point on the scale by adjusting the Asymmetry Control ("Asymm").

2. Assymetry Control. - The Asymmetry Control ("Asymm") provides a means of adjusting the "Zeromatic" to compensate for variations in electrode "zero-potentials". This control is also used to set the desired zero position on the meter scale when the instrument is used for millivolt measurements in the 1400-mv range.

3. Temperature Adjustment Control. - The temperature adjustment control ("Temp °C") provides a means of making manual temperature compensation adjustments when the "Zeromatic" is used without the thermo-compensator. This control is inoperative when the "Auto" push button is depressed; thus, it is not in the circuit when pH measurements are made with the thermo-compensator connected or for millivolt measurements.

11.3c. Operational Procedures

To determine the sample pH, using the "Zeromatic" equipped with the Beckman 39096 thermo-compensator, proceed as follows:

1. Standardize the instrument as indicated below.
2. Depress the "Standby" push button.
   a. Immerse the electrodes (reference and glass) and thermo-compensator in the appropriate buffer solution.
   b. Depress the "Auto" push button.

c. Depress the "Read" push button.

d. Adjust the Asymmetry Control ("Asymm") until the meter needle indicates the correct value of the buffer solution.

3. Rinse the electrodes and thermo-compensator in distilled water.

4. Immerse the electrodes and thermo-compensator in the sample solution.

5. Depress the "Read" push button and read the pH value of the sample solution from the meter.

6. Discard the sample solution and rinse the electrodes in distilled water.

11.4. Underwater Periscope

11.4a. Introduction

The underwater periscope is an optical instrument used for the remote viewing of submerged objects. At the reactor facilities, the periscope has become a useful tool for the detailed inspection of highly radioactive items that must remain shielded by water. The periscope is a precision instrument and is valued at approximately $7,000.

11.4b. Description

The periscope kit consists of several items which are pictured in Figures 11.4.1, 11.4.2, and 11.4.3 and are described as follows:

1. A Viewing Section. - This section permits the viewer to focus the instrument. An eye hook is mounted on the top side of this piece to allow the periscope to be suspended from an overhead crane.
2. A 15-ft Tubular Section. - This section is the "middle piece" of the periscope--to the top connection, the viewing section is attached. Located at the top section is a valve to allow pressurization of the periscope. (The valve is similar to that on an automobile tire.)
3. Four 4-ft Extension Tubes. - Each extension tube used in the assembly extends the minimum permissible distance between the viewing level and object level approximately 55 in. (The minimum distances that can be obtained, allowing for focus, are 15 ft; 19 ft 8 in.; 24 ft 5 in; 29 ft 1 in.; and 33 ft 9 in.

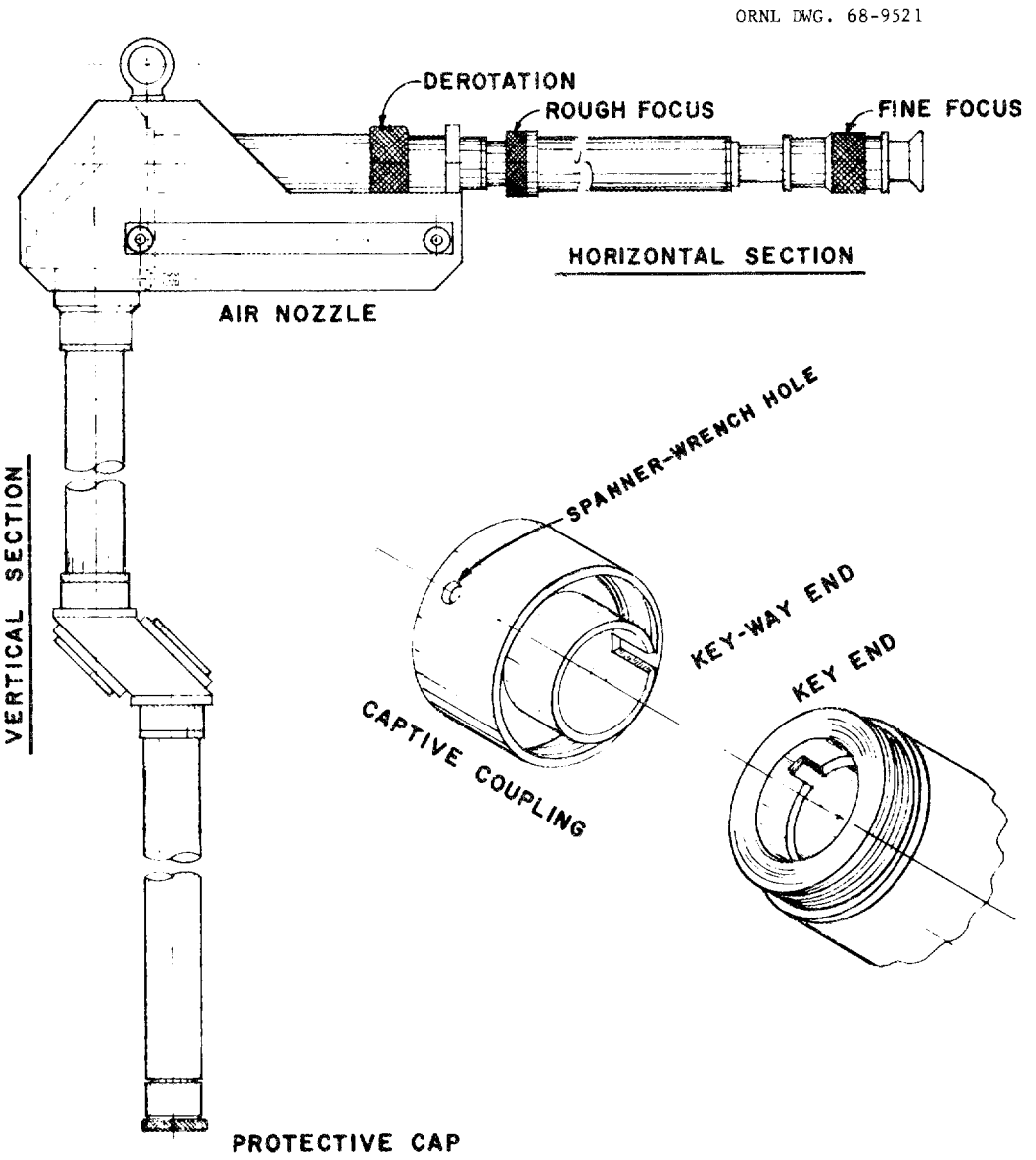

Fig. 11.4.1. Underwater Periscope

ORNL DWG. 68-9522

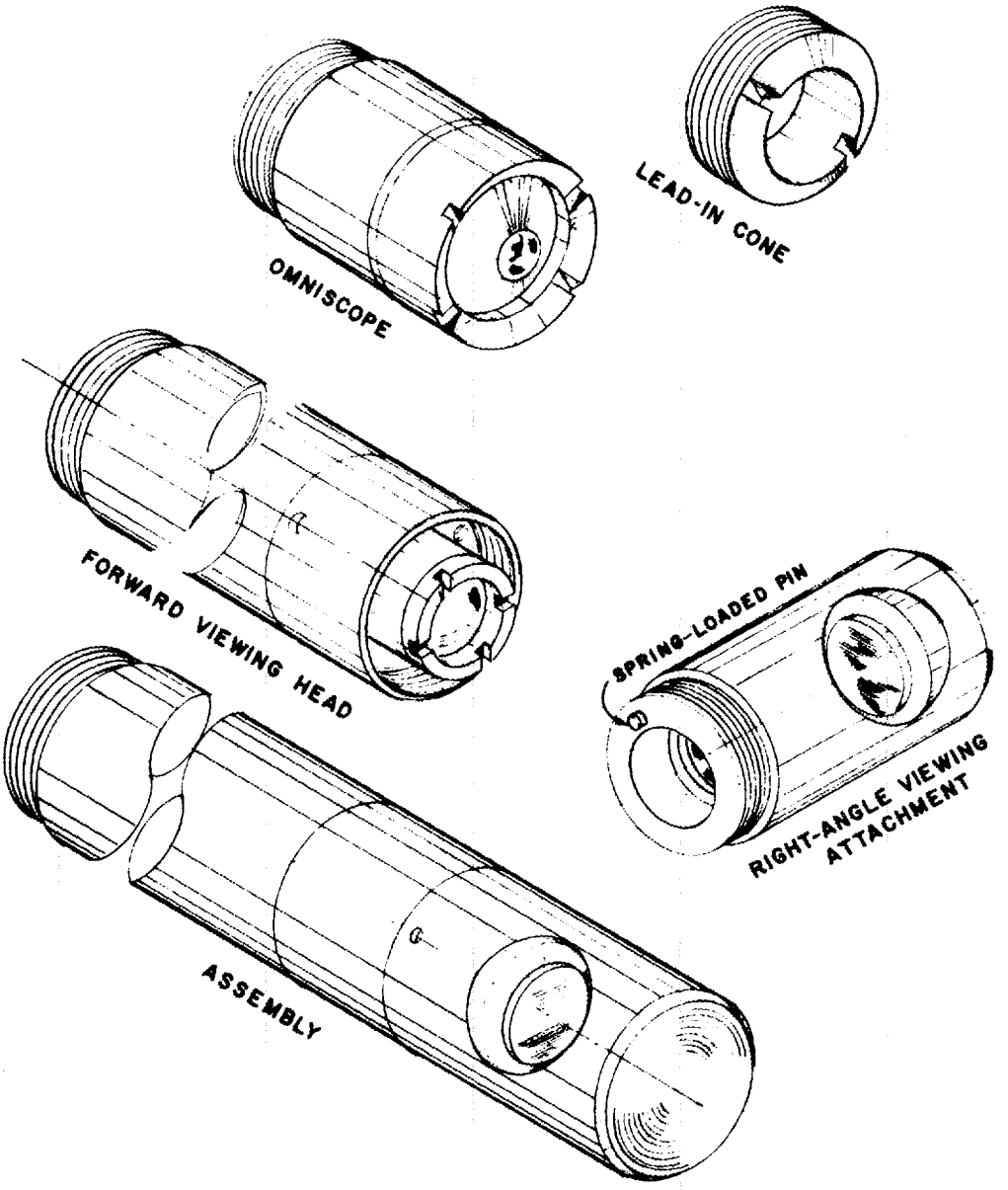

Fig. 11.4.2. Objectives

ORNL DWG. 68-9523

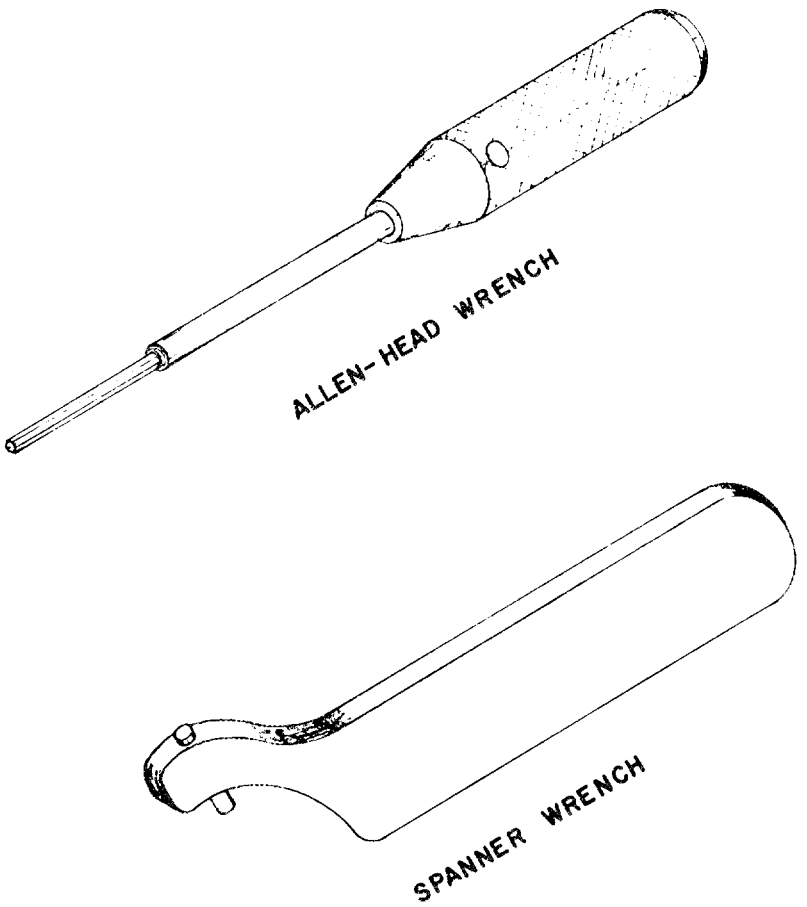

Fig. 11.4.3. Tools

4. Three Viewing Heads. - These attachments are as follows:

   a. An Omniscope. - This piece is used for wide-angle (140°) viewing; the optics do not magnify the object. (NOTE: Subtract 6 in. from the distance listed in item 3 when using this head since the 6-in. captive coupling is not used for wide-angle viewing.)

   b. A Forward Viewing, 4X Objective. - This piece will allow the viewer to observe the top side of the object (the field of vision is straight down when the periscope is suspended in the vertical position); the optics will magnify the object by four times. (NOTE: The 6-in. captive coupling precedes this piece in the assembly.)

   c. A Right-Angle, 4X Objective. - This piece will allow the viewer to observe the sides of an object (the field of vision is at a right angle to the periscope when the periscope is suspended in a vertical position); the optics will magnify the object four times. (NOTE: The 6-in. captive coupling precedes this piece in the assembly.)

5. A 6-In. Captive Coupling. - This piece is attached to the 15-ft tubular section directly when either of the two magnifying heads are used.

6. An Allen-Head Wrench. - This is to be used to attach the viewing piece to the 15-ft tubular section.

7. A Spanner Wrench. - This is used to secure the various tubular pieces to each other (viewing heads, extension tubes, etc.)

8. An Attachment to Allow Pressurization of The 15-Ft Tubular Section - This attachment is similar to those used at a service station to pressurize an automobile tire.

All these pieces are stored in two instrument boxes.

11.4c. Assembly Procedures

1. Prepare a working area. This should consist mainly of placing a 20-ft section of blotting paper on a cleared area of the floor where the instrument is to be assembled.
2. Remove the viewing piece and the 15-ft tubular piece to the working area. (Precaution: Two individuals should remove the 15-ft section to facilitate a safe transfer. Do not allow this section to "sag" in the middle.)
3. Remove the 3 allen-head screws securing the black-colored caps on the viewing piece and on the 15-ft tubular piece.
4. Attach the viewing piece to the tubular piece using the 5 allen-head screws provided. (Align the pressurizing valve facing the eyepiece.)
5. Attach the 6-in. captive coupling section to the bottom end of the 15-ft section. (Precaution: Carefully match the keys in the keyways when connecting the viewing heads, extension, tubes, etc., to the periscope. Use the spanner wrench to provide the proper torque for a tight seal around the rubber O-rings.)
6. Attach either of the two magnifying viewing heads to the 6-in. captive coupling. (NOTE: If the wide-angle viewing head is to be used, the captive coupling is omitted from the assembly.

If a 4-ft extension is needed, it should be attached directly to the 15-ft section, preceding the 6-in. captive coupling.)

7. Pressurize the periscope with dry nitrogen. To prevent water from leaking into the periscope and subsequently distorting the optical characteristics, the periscope should be pressurized to a value slightly in excess of the maximum hydrostatic head to be expected. In general, pressurize to an additional 1 psig for each 2 ft the viewing head will be submerged. (Precaution: The pressure should be increased slowly, in increments; and the final pressure should be rechecked after about 10 min.)

11.4d. Procedure for Transferring the Periscope to the Pool

1. Secure a rope through the eye hook on the viewing section and prepare a loop to attach to the small crane. Allow about 3 ft of rope to separate the crane from the periscope so that the crane does not present any obstacle problems to the viewer.
2. Raise the crane very slowly to take the slack out of the rope. When the viewing section of the periscope is raised slightly off the floor and until the periscope is suspended completely from the rope, two individuals should support the 15-ft tubular section in such a manner as to prevent any possible sagging or bowing of the center section.
3. Transfer the periscope to the pool. Do not allow unnecessary "swinging around" of the viewing head while the periscope is hanging from the crane. As the viewing head is being submerged, be certain that it does not strike any other objects in the pool.

11.4e. Focusing Procedures

1. Rotate the knurled eyepiece barrel until the eyepiece is roughly in the middle of its fine-focusing travel.
2. Loosen the knurled locking ring outside the off-set bridge structure. Slide the eyepiece tube back and forth until the image comes into approximate focus and then tighten the locking ring.
3. The image may be reversed or tilted, depending on the number of extensions used and on the orientation of the right-angle viewing attachment. The orientation of the image can be changed by rotating the knurled ring located inside the off-set bridge structure (ring farthest from eyepiece).

NOTE: A camera adapter for a 4X5 Graphic camera is furnished with the periscope if photographs are desired. (See "Operating Instructions for Underwater Periscope Model No. 5000", Lerma Engineering Corporation, Northampton, Massachusetts.)

11.4f. Procedures for Disassembling the Periscope

1. Remove the periscope from the pool water with the same degree of care as outlined previously. With clean rags, wipe the periscope dry as it is being raised from the water.
2. Transfer the periscope to the blotting paper. Two individuals are again needed to support the tubular section as it is laid down. Remove the rope from the crane.
3. Wipe the periscope with clean wet rags and have the health physicist check the assembly for contamination. Decontaminate the assembly if it is necessary. The transferable surface

contamination limits are: 30 d/m/100 cm^2 for alpha and 1000 d/m/100 cm^2 for beta-gamma emitters. However, when the contamination involves radionuclides such as plutonium or some other long-lived emitter of comparable toxicity, the alpha levels permitted should average no more than 1/100 the given value.

4. To depressurize the periscope, depress the center pin in the valve (similar to method used to deflate an automobile tire).
5. To disassemble the periscope: follow the assembly procedures in reverse.
6. Store the disassembled pieces in the two instrument boxes. (Precaution: Two individuals are required to transfer the 15-ft section).

11.5. Spectrometer Crane

11.5a. Introduction

This device moves on tracks running in the north-south direction, as does the overhead bridge crane; the rails for the spectrometer crane are at a lower elevation than the rails for the overhead crane.

The spectrometer crane is, in essence, obsolete. It was installed in 1958 for special tests conducted by experimenters in the Neutron Physics Division when operation of the reactor was their responsibility. This equipment is no longer of any use and, in all probability, will be removed. However, since this equipment is space consuming, it must be moved from time to time to allow repositioning of equipment brought into the truck bay area.

11.5b. Description

(For reasons mentioned above, the description of this equipment, as given here, will be very limited.)

The power supply to the spectrometer crane is located on the west wall by the exit door; this 440-v panel box remains off and locked out. The controls for the spectrometer crane are on the small platform suspended from the crane. These include a key-operated switch (the key remains in the lock box in the BSR control room). Above the key switch (overhead) there are three levers (labeled "Bridge", "Trolley", and "Hoist"); one will move the assembly in a north-south direction, one will move the assembly in the east-west direction, and one will maneuver the jaws of the spectrometer. Normally, only the first two of these controls are required for the infrequent operation of this equipment. (Precaution: Do not raise the center section too high since it will interfere with the overhead bridge crane.)

12. RECORDS AND DATA ACCUMULATION

12.1. Introduction

The proper acquisition and accumulation of operating data on an hourly, daily, or weekly basis is of the utmost importance and cannot be overemphasized. These data are not only needed to prepare reports, they are necessary to evaluate the continuing operating status of the various systems throughout the reactor complex.

The operator is responsible for obtaining and recording most of the data required and reporting any deviations from normal. The supervisor is responsible for carefully studying all the routine data (hourly readings, water systems data, log-book entries, etc.) for the purpose of detecting any possible trends away from normal values.

12.2. Daily Report Forms

On the following pages are examples of the various forms of data sheets used at the BSR. The items listed on each sheet are self-explanatory; consequently, detailed descriptions of each item will not be given.

12.2a. BSR Hourly Readings (Example 12.2.1)

Three times during each shift the operator at the console will obtain and record the required data. Any deviation from normal values should be called to the attention of the shift engineer. If the reactor is being operated remotely, the data sheets will be transferred to the ORR control room. These completed sheets are filed in the BSR control room office.

12.2b. BSR Power Changes and Accumulated Power (Example 12.2.2)

This form is used to maintain a record of the reactor power level on an hourly basis and a record of the accumulated energy for a 24-hour period. If there are changes in power level due to unscheduled shutdowns or termination of short-duration runs, they are recorded after each power change regardless of the time.

12.2c. BSR Shift Check Sheets (Examples 12.2.3, 12.2.4, and 12.2.5)

To ensure a high degree of operating safety and performance, a number of checks on the various reactor systems and components have been selected to be made on a routine basis.

Each shift on duty will have a "roving" operator inspect the reactor complex for each of the items listed on the check sheet applicable for that particular shift. When each item is completed, it is checked on the sheet. Any abnormalities should be reported to the shift engineer. These check sheets, prepared for the midnight (12-8) shift (Example 12.2.3),

the day (8-4) shift (Example 12.2.4), and the evening (4-12) shift (Example 12.2.5), are filed in the BSR control room office.

12.2d. BSR Daily Summary (Example 12.2.6)

Toward the conclusion of each evening shift, an operator will begin to prepare the daily summary (Example 12.2.6). This form, normally completed by the 12-8 shift, contains the hours operated, the accumulated energy for the day, and information on the demineralizer units. These sheets are filed in the BSR control room office.

12.2e. BSR Log Book

At the end of each shift, the supervisor in charge of operating the reactor should write the log using the following format:

1. Operations. - List the total time the reactor was operated above 100 kw during the shift.
2. Shutdown. - List the number of shutdowns occurring during the shift and the duration of each. A reduction in power level below 100 kw should be considered a shutdown.
3. Troubles. - This item is self-explanatory; it should not include trivia. Any abnormalities concerning the instrument readouts should be desribed in detail.
4. Checks. - If all the routine checks required for the particular shift have been made, it should be noted. Also, any checks which were not made should be listed, so that the oncoming shift can complete them when possible.
5. Maintenance. - List all work performed at the reactor complex by individuals in the maintenance groups.

6. Research. - List any service performed for any of the individuals in the research group. Also list the pertinent activities of the experimenters.

7. Samples. - List all pertinent information on materials irradiated at the BSR (identification, duration in flux, present location, etc.).

8. Miscellaneous. - List all items worthy of attention. In the back of the BSR log book, the operator is to record the data on the water system (pH, resistivity, total solids).

9. Housekeeping. - List specific items.

Example 12.2.1. BSR Hourly Readings (UCN-8152)

BSR HOURLY READINGS

DATE

SHIFT

Check One: ☐ Local Operation ☐ Remote Operation

DAY NO.

SUPERVISOR

Time		1:00 AM 9:00 AM 5:00 PM			4:00 AM 12:00 N 8:00 PM			7:00 AM 3:00 PM 11:00 PM
Temperature Reactor Water In, °F (Pt. 1)								
Temperature Reactor Water Out, °F (Pt. 2)								
ΔT, °F (TdR-17)								
Reactor Water Flow, gpm (FR-10)								
ΔT x Flow x 0.1448 = kw								
No. 1 Safety								
No. 2 Safety								
No. 3 Safety								
Reactor Exit Water Radioactivity r/hr								
No. 1 Shim Rod, Inches Out								
No. 2 Shim Rod, Inches Out								
No. 3 Shim Rod, Inches Out								
No. 4 Shim Rod, (Reg. Rod), Inches Out								
No. 5 Shim Rod, Inches Out								
No. 6 Shim Rod, Inches Out								
Log N								

UCN-8152
(3 5-67)

Example 12.2.2. BSR Power Changes and Accumulated kwh (UCN-7973)

BSR POWER CHANGES AND ACCUMULATED KWH

DATE

DAY NO.

12-8 SHIFT SUPERVISOR				8-4 SHIFT SUPERVISOR				4-12 SHIFT SUPERVISOR			
TIME	POWER LEVEL	INCREMENTAL kwh	ACCUMULATED kwh	TIME	POWER LEVEL	INCREMENTAL kwh	ACCUMULATED kwh	TIME	POWER LEVEL	INCREMENTAL kwh	ACCUMULATED kwh

UCN-7973
(3 2-67)

Example 12.2.3. BSR Routine Check Sheet (12-8 Shift) (UCN-8100B)

BSR ROUTINE CHECK SHEET

12-8 SHIFT

STARTING DATE

SHIFT

CHECKED BY (Initials)							
	SAT.	SUN.	MON.	TUE.	WED.	THUR.	FRI.
All doors leading to pool area and control room are locked							
Pool water level is adequate. Record level on clipboard, SE corner of pool							
CAM's and Monitrons operating properly							
CAM's and Monitrons checked with source							
Cutie pies and survey meters in proper locations							
All yellow not cans emptied							
Evacuation horn tested							
Experiment panels checked and services completed							
Evacuation package checked							
N_2 supply and pressure for evacuation horn checked							
Secondary pH and total solids checked and logged if secondary is operating							
Area inspection including core, pumps, fans, motors (Log abnormalities)							
Turn all steam tracing on when outside temperature drops to $\sim 32^{\circ}F$							
Demineralizer integrator reading 12:01 a.m.							
Skimmer operating properly							
Check level of D_2O in overflow bottles to east and west D_2O tanks							
Hand cranks on reactor, reactor bridge, and instrument bridge chained and locked							
Fuel-handling tools (PCA and BSR) locked in place when not in use							
Overhead and spectrometer crane switches locked in off position when not in use							
Check special instruction clipboard							
Check tower fans for vibration and oil level when secondary is operating							

UCN-8100B
(3 4-67)

Example 12.2.4. BSR Routine Check Sheet (8-4 Shift) (UCN-8100)

BSR ROUTINE CHECK SHEET

8-4 SHIFT

STARTING DATE

SHIFT

CHECKED BY (Initials)	FRI.	SAT.	SUN.	MON.	TUE.	WED.	THU.
All doors leading to pool area and control room are locked							
Pool water level is adequate. Record level on clipboard at southeast corner of pool							
CAM's and Monitrons operating properly							
Experiments checked and services completed							
Secondary pH and total solids checked and logged when secondary is operating. CrO_4 checked and added if needed.							
Secondary water counts taken and logged when operating							
Biocide treatment (F-14) added							
Skimmer operating properly							
Check level in overflow bottles on east and west D_2O tanks							
Overhead and spectrometer crane switches locked in off position when not in use							
Area Inspection including core, pumps, fans, motors (log abnormalities)							
Check special instruction clipboard							
Hand cranks on reactor, reactor bridge, and instrument bridge chained and locked							
Check sump pump in old vault for proper operation							
Turn all steam tracing on if outside temperature drops to ~32°F							
BSR Radiation Survey (To be taken when reactor is operating)							
Fuel handling tools (PCA and BSR) locked in place when not in use							
Supplies inventoried and orders placed for items needed							
Check tower fans for vibration and oil level if secondary is operating							
pH and resistance on demineralizer inlet and exit							
Water counts on demineralizer inlet and exit							
Safety showers checked: 1. Secondary cooling tower 2. BSR pump house							
Cell ventilation pressure drop reading							
SUPERVISOR'S INITIALS							

UCN-8100
(3 4-69)

Example 12.2.5. BSR Routine Check Sheet (4-12) Shift (UCN-8100A)

BSR ROUTINE CHECK SHEET
4-12 SHIFT

STARTING DATE

SHIFT

CHECKED BY (Initials)							
	WED.	THUR.	FRI.	SAT.	SUN.	MON.	TUE.
All doors leading to pool area and control room locked							
Pool water level is adequate. Record level on clipboard at southeast corner of pool							
CAM's and Monitron's operating properly							
Experiment panels checked and services completed							
Secondary pH and total solids checked and logged if secondary is operating							
Skimmer operating properly							
Check level in overflow bottles on east and west D_2O tanks							
Area inspections including core, pumps, fans, motors (Log abnormalities)							
Check special instruction clipboard							
Hand cranks on reactor, reactor bridge, and instrument bridge chained and locked							
Turn all steam tracing on if outside temperature drops to $\sim 32^0$ F							
Fuel-handling tools (PCA and BSR) locked in place when not in use							
Check tower fans for vibration and oil level if secondary is operating							
Overhead and spectrometer crane switches locked in off position when not in use							
Cutie-pies and survey meters in proper locations							

UCN-8100-A
(3 12-67)

Example 12.2.6. BSR Daily Summary (UCN-7974)

BSR DAILY SUMMARY

DAY NO.	DATE	ENGINEER

I POWER

SHIFT	HOURS OPERATED	HOURS DOWN	kwh		ACCUMULATED (INSTRUMENT) POWER, kwh
			INSTRUMENT	HEAT	
12-8					PREVIOUS TOTAL
8-4					DAY'S TOTAL
4-12					CURRENT TOTAL
TOTAL					

II DEMINERALIZER

	pH	RESISTIVITY	COUNTS min^{-1} ml^{-1}	BYPASS FILTER (PRIMARY)
INLET				DATE OF LAST CHANGE OF FILTERS
EXIT				
ANION				THROUGHPUT GALLONS (ACCUMULATION)
CATION				
DAY'S THROUGHPUT (gal)				

III COMMENTS

UCN-7974
(3 2-67)

12.3. Miscellaneous Report Forms

12.3a. BSR Weekly Report (Example 12.3.1)

This report is a summation of the operating data obtained during the week. It includes information on maintenance performed at the reactor complex, troubles, modifications, etc. This report is prepared by the supervisor assigned to the BSR and is distributed through the Reactor Operations Department.

12.3b. BSR Quarterly Report

This report, prepared by the reactor supervisor, is a compilation of operating data, and experiences covering a period of three months. It normally includes an analysis of reactor shutdowns, reactor controls, information on experiments, and special studies performed.

12.3c. BSR Startup Checklist (Example 12.3.2)

Prior to a reactor startup, it is imperative that all systems are functioning as designed and that all instrumentation and administrative requirements for startup of the reactor are met. This is the responsibility of the supervisor in charge of the startup. To ensure a proper checkout of the various systems, a startup checklist is provided. The supervisor must initial each item as the designated requirements are satisfied. In addition, the supervisor in charge of the startup, upon completion of the startup, should fill in the information (personnel performing the startup) required on the reactor startup record sheet. This sheet is on the BSR panel below the key cabinet.

12.3d. BSR Reactor Shutdown Checklist (Example 12.3.3)

To ensure that all systems are properly shut down or placed in a standby status following the shutdown of the reactor, a checklist is

provided. This form must be completed by the supervisor in charge of the shutdown.

Example 12.3.1. BSR Weekly Report (UCN-7260)

BSR WEEKLY REPORT

WEEK ENDING

A. OPERATING DATA

KWH AT END OF WEEK	KWH AT BEGINNING OF WEEK	TOTAL KWH DURING WEEK

DATE	ACCUMULATED ENERGY (kwh)	HOURS OPERATED	HOURS DOWN
Total			

B. REACTOR CONTROL SYSTEM (List Changes, Modifications, Troubles, etc.)

UCN-7260
(3 8-66) PAGE 1

Example 12.3.1 (continued)

C. USAGE OF REACTOR

FACILITY	DATE IN	DATE OUT	TIME (hr)	POWER LEVEL	PURPOSE	SPONSOR

UCN-7260
(3 8-68) PAGE 2

Example 12.3.1 (continued)

D. REACTOR COOLING WATER

BYPASS FILTERS	SKIMMER	
DATE OF LAST CHANGE	PRIMARY	
MAKE UP WATER ADDED TO POOL (GALLONS)	EVAPORATION	
	OTHERS	

PRIMARY DEMINERALIZER

RUN NO.	INITIATION DATE	TERMINATION DATE	pH		RESISTIVITY (ohm-cm)		COUNTS	
			IN	OUT	IN	OUT	IN	OUT

INTEGRATOR READING	TOTAL GALLONS THROUGH THIS RUN

E. MISCELLANEOUS INFORMATION *(GENERAL IMPROVEMENTS, TOUBLES, ETC.)*

UCN-7260
(3 6-68) PAGE 3

BSR START-UP CHECK LIST

NOTE: The supervisor making the start-up checks should initial each blank after completion of the item. (In addition, the individual starting the checks should remain on duty until the reactor is made critical and stabilized at the desired power level; otherwise, the checks should be repeated by the next individual in charge.)

Supervisor	____	____	____	____	____
Date	____	____	____	____	____
Core No.	____	____	____	____	____

A. Reactor Area

1.	Proper loading and reactor position.	____	____	____	____	____
2.	All core pieces in place and properly seated.	____	____	____	____	____
3.	All experiment rigs in proper location and secured.	____	____	____	____	____
4.	Proper source location.	____	____	____	____	____
5.	Shim-rod-drive units and fission-chamber-drive units in proper position and fastened to hold-down arms.	____	____	____	____	____
6.	All work in core completed and final inspection made.	____	____	____	____	____
7.	Reactor carriage and bridge locked in position.	____	____	____	____	____
8.	Instrument bridge locked in position.	____	____	____	____	____

B. Experiment Facilities

1.	All changes to experiments completed.	____	____	____	____	____
2.	Experiment information sheets current.	____	____	____	____	____
3.	Experiment safety-check sheets completed by instrument engineers (for all applicable experiments).	____	____	____	____	____

Example 12.3.2.

4.	Special instruction sheets completed.	____	____	____	____	____

C. Water Systems--Mode 1 (Convection Cooling)*

1.	Pool filled to proper level and all pool-level alarms cleared.	____	____	____	____	____
2.	Flapper valve in fully open position.	____	____	____	____	____
3.	Demineralizer in service.	____	____	____	____	____
4.	Water purity adequate.	____	____	____	____	____
5.	Skimmer system in operation.	____	____	____	____	____
6.	Jets on for operation >100 kw.	____	____	____	____	____

D. Water Systems--Mode 2 (Forced Cooling)*

1.	Pool filled to proper level.	____	____	____	____	____
2.	All pool-level alarms cleared.	____	____	____	____	____
3.	Primary cooling system filled and vented.	____	____	____	____	____
4.	HCV-3 fully opened and HCV-9 fully closed.	____	____	____	____	____
5.	Flapper valve in fully closed position.	____	____	____	____	____
6.	Primary cooling system flow established.	____	____	____	____	____
7.	Demineralizer in service.	____	____	____	____	____
8.	Water purity adequate.	____	____	____	____	____
9.	Secondary cooling system filled, treated, and ready for service.	____	____	____	____	____
10.	Both the exit water and the decay tank treated, and ready for service.	____	____	____	____	____
11.	Skimmer system in operation.	____	____	____	____	____

---

*Either Section C or Section D must be completed.

E. Instrumentation Checks

1. Local operation selected.	____	____	____	____	____
2. All utility service in order:					
a. Power circuits L-1 through L-9, located in "Normal-Emergency" panel.	____	____	____	____	____
b. Power circuits L-21 through L-23, located in "clean" panel.	____	____	____	____	____
c. Air supply.	____	____	____	____	____
3. All recorders, amplifiers, etc., turned on at least 1/2 hour prior to operation of the reactor.	____	____	____	____	____
4. Ionization chamber positions. (Check log book for any movement during shutdown.)	____	____	____	____	____
5. Log count-rate channel.					
a. Calibrate CRM to 60 counts/sec on recorder and set on USE.	____	____	____	____	____
b. Check that as fission chamber is inserted counts increase and vice versa.	____	____	____	____	____
c. Check fission chamber using calibration curve.	____	____	____	____	____
d. Set PHS and gain at the posted startup value.	____	____	____	____	____
e. Position fission chamber so that: 20 counts/sec <CR <40 counts/sec.	____	____	____	____	____
6. Log-N channel.					
a. Chamber voltage: +_____, -_____, ± 10%.	____	____	____	____	____
b. Calibrate log-N amplifier with recorder and set on GROUND.	____	____	____	____	____

7. Servo channel.

   a. Chamber voltage: +_____, -_____, ± 10%. ____ ____ ____ ____ ____

   b. Zero micromicroammeter. ____ ____ ____ ____ ____

8. Magnet current checked and adjusted properly. ____ ____ ____ ____ ____

9. Scram checks.

   a. Raise rods ~1 in. and scram by manual button and reset. ____ ____ ____ ____ ____

   b. Raise rods ~1 in. and scram by pushing the 1-sec button on the log-N amplifier. Set the log-N amplifier on OPERATE. ____ ____ ____ ____ ____

   c. Raise rods ~1 in. and scram by No. 1 Jordan button. ____ ____ ____ ____ ____

   d. Same for No. 2 Jordan button. ____ ____ ____ ____ ____

   e. Same for No. 3 Jordan button. ____ ____ ____ ____ ____

10. Set micromicroammeter range switch on desired range. Set servo demand for desired fraction of range. ____ ____ ____ ____ ____

11. All air monitors and Monitrons normal. ____ ____ ____ ____ ____

12. All instrument channels working properly and corresponding recorders tracking. ____ ____ ____ ____ ____

13. Annunciator panels clear (if not, reason for any alarm must be known). ____ ____ ____ ____ ____

F. Other Checks

1. PA system operating properly. ____ ____ ____ ____ ____

2. Next power level schedule reviewed and understood. ____ ____ ____ ____ ____

3. Prestartup warning issued over PA system if requested by experimenters. ____ ____ ____ ____ ____

4. Core loading chart up to date and properly approved. ____ ____ ____ ____ ____

5. Containment system operational.	____	____	____	____	____
6. Pool area air conditioning functioning properly (for extended periods of high-power reactor operation).	____	____	____	____	____

BSR SHUTDOWN CHECKLIST

NOTE: The individual completing this checklist should initial each item as it is completed.

Supervisor	____	____	____	____	____
Date	____	____	____	____	____
Core No.	____	____	____	____	____
1. All rods in seat position and seat lights ON	____	____	____	____	____
2. Servo demand at N_L and range switch as low as possible while "on scale"	____	____	____	____	____
3. Log-N amplifier on GROUND position	____	____	____	____	____
4. Reactor secondary loop:					
a. Fans in OFF	____	____	____	____	____
b. Pump in OFF	____	____	____	____	____
c. Blow-down valves closed	____	____	____	____	____
d. Acid-addition system OFF	____	____	____	____	____
5. Reactor primary loop:					
a. HCV-3 fully open	____	____	____	____	____
b. HCV-9 fully closed	____	____	____	____	____
c. Flapper valve open	____	____	____	____	____
d. Demineralizer flow normal	____	____	____	____	____
6. Fission chamber inserted to give 20 counts/sec and set in automatic	____	____	____	____	____
7. Key switch in OFF and key removed; key locked in key box	____	____	____	____	____
8. RIM-5 pool outlet radiation microammeter switch placed on the 10^{-11} position	____	____	____	____	____
9. RIM-18 decay tank off-gas radiation microammeter switch placed on the 10^{-11} position	____	____	____	____	____

INTERNAL DISTRIBUTION

1. R. G. Affel
2. F. T. Binford
3. R. K. Branam
4. F. R. Bruce
5. C. D. Cagle
6. W. R. Casto
7. R. H. Chapman
8. C. E. Clifford
9. R. A. Costner, Jr.
10-34. J. A. Cox
35. W. H. Culbert
36. E. P. Epler
37. J. M. Farmer
38. C. B. Gaither
39. E. D. Gupton
40. T. P. Hamrick
41. R. D. Hulen
42-44. S. S. Hurt, III
45. L. P. Jernigan
46. E. B. Johnson
47. S. I. Kaplan
48. E. D. Lance
49. C. McBee
50. H. G. MacPherson
51. R. V. McCord
52. J. M. Miller
53. T. B. Nixon
54. R. G. Orrison
55. M. E. Ramsey
56-70. H. M. Roth, AEC
71. A. F. Rupp
72. R. L. Scott, Jr.
73. M. J. Skinner
74. W. H. Tabor
75. J. R. Thomas
76. C. S. Walker
77. A. M. Weinberg
78. R. C. Weir
79. K. W. West
80-81. Laboratory Records Dept.
82-83. Central Research Library
84. Laboratory Records, ORNL R.C.
85. Document Reference Section
86-100. Division of Technical Information Extension, AEC

EXTERNAL DISTRIBUTION

101. K. M. Akhtar, Pakistan