LOCKHEED MARTIN ENERGY RESEARCH LIBRARIES
3 4456 0515545 3

CENTRAL RESEARCH LIBRARY
DOCUMENT COLLECTION

1

ORNL-4380
UC-25 – Metals, Ceramics, and Materials

PULSE CALORIMETRY USING A DIGITAL VOLTMETER FOR TRANSIENT DATA ACQUISITION

T. G. Kollie
D. L. McElroy
M. Barisoni
C. R. Brooks

OAK RIDGE NATIONAL LABORATORY
CENTRAL RESEARCH LIBRARY
DOCUMENT COLLECTION
LIBRARY LOAN COPY
DO NOT TRANSFER TO ANOTHER PERSON
If you wish someone else to see this document, send in name with document and the library will arrange a loan.
UCN-7969
(3 3-67)

OAK RIDGE NATIONAL LABORATORY
operated by
UNION CARBIDE CORPORATION
for the
U.S. ATOMIC ENERGY COMMISSION

LEGAL NOTICE

This report was prepared as an account of Government sponsored work. Neither the United States, nor the Commission, nor any person acting on behalf of the Commission:

A. Makes any warranty or representation, expressed or implied, with respect to the accuracy, completeness, or usefulness of the information contained in this report, or that the use of any information, apparatus, method, or process disclosed in this report may not infringe privately owned rights; or

B. Assumes any liabilities with respect to the use of, or for damages resulting from the use of any information, apparatus, method, or process disclosed in this report.

As used in the above, "person acting on behalf of the Commission" includes any employee or contractor of the Commission, or employee of such contractor, to the extent that such employee or contractor of the Commission, or employee of such contractor prepares, disseminates, or provides access to, any information pursuant to his employment or contract with the Commission, or his employment with such contractor.

ORNL-4380

Contract No. W-7405-eng-26

METALS AND CERAMICS DIVISION

PULSE CALORIMETRY USING A DIGITAL VOLTMETER FOR TRANSIENT DATA ACQUISITION

T. G. Kollie M. Barisoni
D. L. McElroy C. R. Brooks

To be published in the proceedings of the 1st European Conference on Thermophysical Properties of Solid Materials at High Temperatures, held at Baden-Baden, West Germany, November 1968.

FEBRUARY 1969

OAK RIDGE NATIONAL LABORATORY
Oak Ridge, Tennessee
operated by
UNION CARBIDE CORPORATION
for the
U.S. ATOMIC ENERGY COMMISSION

LOCKHEED MARTIN ENERGY RESEARCH LIBRARIES

3 4456 0515545 3

CONTENTS

Page

Abstract 1
Introduction 1
Calorimetry Equipment 5
The Vacuum Furnace 5
The Sample-Holder Assembly 8
The Specimen 10
The Thermometry and Power Circuitry 10
The Transient Signal Circuitry 12
Procedure 14
Steady-State Measurements 15
Transient Measurements 15
Calculations 16
Test Section Mass 19
Amplifier and DVM Calibration 19
Temperature, Voltage, and Current During Heating 20
Heating Rate 21
Cooling Rate 21
Specific Heat 22
Accuracy 24
Closure 29
Acknowledgments 31
References 31

PULSE CALORIMETRY USING A DIGITAL VOLTMETER FOR TRANSIENT DATA ACQUISITION

T. G. Kollie M. Barisoni*
D. L. McElroy C. R. Brooks**

ABSTRACT

A pulse calorimeter for measuring the specific heat of electrical conductors from 300 to 1500°K is described. The technique employed is unique in that a digital voltmeter, which is capable of recording 2000 readings/sec to a readability of 0.01% of full scale, is utilized to measure the transient temperature and power signals requisite to the method. Using this technique a calculated determinate accuracy of 99% has been achieved to 1200°K. Above 1200°K, the accuracy is at least 98%. Measurements of the specific heat of pure iron from 300 to 1500°K were repeatable to within ±0.5% and confirmed the above accuracy statements. The calorimeter is capable of measuring the specific heat and electrical resistivity rapidly at temperature intervals as small as 0.03 degree, and the significance of such capability is discussed, particularly with regard to the nature of the specific heat of iron near its Curie transformation.

INTRODUCTION

The determination of specific heat by pulse calorimetry requires measurements of the time dependence of the temperature and the electrical power dissipation within the test section of a sample during a heat pulse. An elementary heat balance on the test section during a pulse yields

$$\text{Power In} = \text{Power Absorbed} + \text{Power Loss} . \qquad (1)$$

*On loan to ORNL from Centro Sperimentale Metallurgico, Rome, Italy.

**Chemical and Metallurgical Engineering Department, the University of Tennessee, Knoxville, Tennessee.

For methods which employ joule heating of the sample by a direct current, the Power In is a product of the current flowing through the sample, I, and the voltage drop, E, across the test section. If it is assumed that the entire mass, m, of the test section increases in temperature, T, at a rate, dT/dt, the Power Absorbed by the test section is $mC_p\ dT/dt$. Here C_p is the specific heat at the average temperature of the test section.

As shown in Fig. 1, the Power Loss from the test section is due to three mechanisms — radiation, conduction, and convection. These power losses may be assessed by calculations and/or auxiliary experiments. At

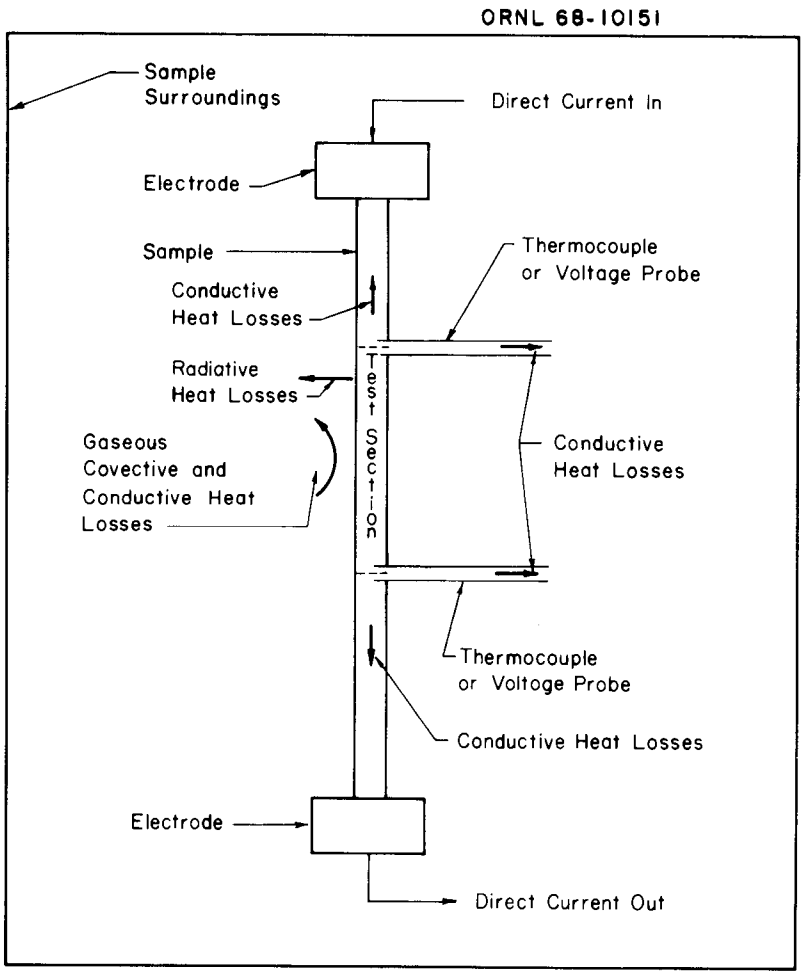

Fig. 1. Schematic Diagram of Pulse Calorimeter Which Utilizes Joule Heating to Supply the Required Pulse. The three mechanisms of heat loss from the test section are indicated.

high temperatures, the dominant method of heat loss is radiation, which is relatively simple to calculate by the familiar T^4 law. To perform this calculation, a knowledge of the geometry of the sample and its surroundings as well as their thermal radiative properties is required. For the special case of a test section of radiating area, A_R, and total hemispherical emittance, ϵ, surrounded by a blackbody at temperature, T_0, the power radiated, P_R, is

$$P_R = \sigma\epsilon A_R \left[T^4 - (T_0/T)^{\frac{1}{2}} T_0^4\right] , \tag{2}$$

where σ is the Stefan-Boltzman constant.

Conduction losses may occur both through the thermocouple or voltage probes attached to the test section and through the sample itself to the electrodes. The latter loss is a product of the cross-sectional area and thermal conductivity of the sample and the instantaneous longitudinal temperature gradient at the extremities of the test section. Similarly, the losses through the thermocouples or voltage probes are a product of their cross-sectional area, thermal conductivity, and the transient temperature gradient at their interface with the test section. Unfortunately, it is very difficult to ascertain these temperature gradients during the pulse; therefore, it is necessary to design the experiment so that the conduction loss term is negligible with respect to the absorption term. This can be achieved by employing very small wires for the thermocouples or voltage probes and by using long, small-diameter specimens.

In a vacuum of 10^{-6} torr or better, gaseous convection and conduction losses are negligible with respect to the power absorbed. Thus, for a long, small-diameter, self-heated specimen suspended in a blackbody vacuum chamber, Eq. (1) gives

$$C_p = \frac{EI - \sigma\epsilon A_R \left[T^4 - (T_0/T)^{\frac{1}{2}} T_0^4\right]}{m\ dT/dt} \tag{3}$$

in terms of the specific heat.

For techniques in which the conduction heat losses cannot be neglected, in which the thermal radiative properties are not known, or in which greater accuracy is desired than that obtained by Eq. (3), two methods of direct measurement of the power losses are available. First,

if it is assumed that the heat loss at a given temperature is the same at steady state as during a pulse, measurement of the power, P_T, required to hold a sample at this temperature is equal to the total power loss. Hence, Eq. (1) gives

$$C_p = \frac{EI - P_T}{m\ dT/dt} \tag{4}$$

and applies only when all terms are evaluated at a particular temperature. Secondly, a less restrictive assumption is that the heat losses are the same during heating as when the power pulse is turned off and the sample allowed to free-cool. Measurement of the rate of cooling $(dT/dt)_c$ permits a calculation of the total power loss, yielding

$$C_p = \frac{EI}{m[dT/dt - (dT/dt)_c]} \quad . \tag{5}$$

Again, this applies when all terms are evaluated at a particular temperature.

Equations (3), (4), and (5), or some minor variation thereof, are the three basic equations used in pulse calorimetry described in the literature. From the foregoing discussion, it is obvious that the major requirement for obtaining accurate specific heat measurements is the ability to minimize or estimate accurately the power loss. This is true because the power loss appears in Eq. (1) as a sum with the term which contains the quantity sought — namely the specific heat.

A pulse calorimeter was developed at the Oak Ridge National Laboratory in which data amenable to treatment by these three equations were obtained. The specific heat values calculated by these three equations on measurements between 300 and 1200°K on a pure iron sample were self-consistent within the accuracy of the technique, ±1.0%. This calorimeter, described previously,[1,2] consisted of a 60-cm-long, 0.25-cm-diam sample suspended in a blackbody vacuum chamber held at room temperature. The sample was self-heated by a stepwise pulse of direct current, and a digital voltmeter (DVM) was employed to measure the transient power and temperature signals. At 1200°K, the power loss was about 25% of the maximum available input power. An accuracy of only 98% was achieved in

the estimate of the power loss and therefore resulted in a ±0.5% error in the specific heat. Since the power loss increased as T^4 and a temperature capability of 1700°K was desired, a new calorimeter was constructed in which the sample was placed in an essentially isothermal enclosure within a vacuum furnace. This enclosure was maintained at a selected constant temperature while the sample was pulsed 100 to 300 degrees above the enclosure temperature at a rate of about 20 degrees/sec. In this manner, the heat loss was kept within acceptable limits and was measured by allowing the sample to free-cool after the pulse [Eq. (5)].

It is the purpose of this paper to discuss this new calorimeter, emphasizing the changes — such as in the DVM — which have been made since the previous publications.[1,2] In the following sections, the equipment, procedure, and calculations requisite to the technique are described. Also, the accuracy of the method is assessed.

CALORIMETRY EQUIPMENT

A schematic diagram of the new pulse calorimeter is shown in Fig. 2. For convenience, the equipment is discussed in five subgroups: the vacuum furnace, the sample-holder assembly, the specimen, the thermometry and power circuitry, and the transient signal circuitry.

The Vacuum Furnace

The vacuum furnace consisted of an alumina* tube suspended vertically in a clamshell furnace.** One end of the tube protruded 25 cm out of the furnace where it was joined by epoxy cement to a water-cooled flange, which in turn was bolted and O-ring sealed to a pipe tee.† As depicted in Fig. 2, the water-cooled tee was bolted and O-ring sealed

---

*Coors USA, AD-99 tube, 75 cm long, 7 cm o.d., 6 cm i.d., and closed on one end.

**Hevi-Duty Electric Company, Model MU-3024, capable of 1300°K; 61-cm-long and 7.6-cm-diam hot zone.

†Consolidated Vacuum Corporation, 4 in. nominal, stainless-steel pipe tee.

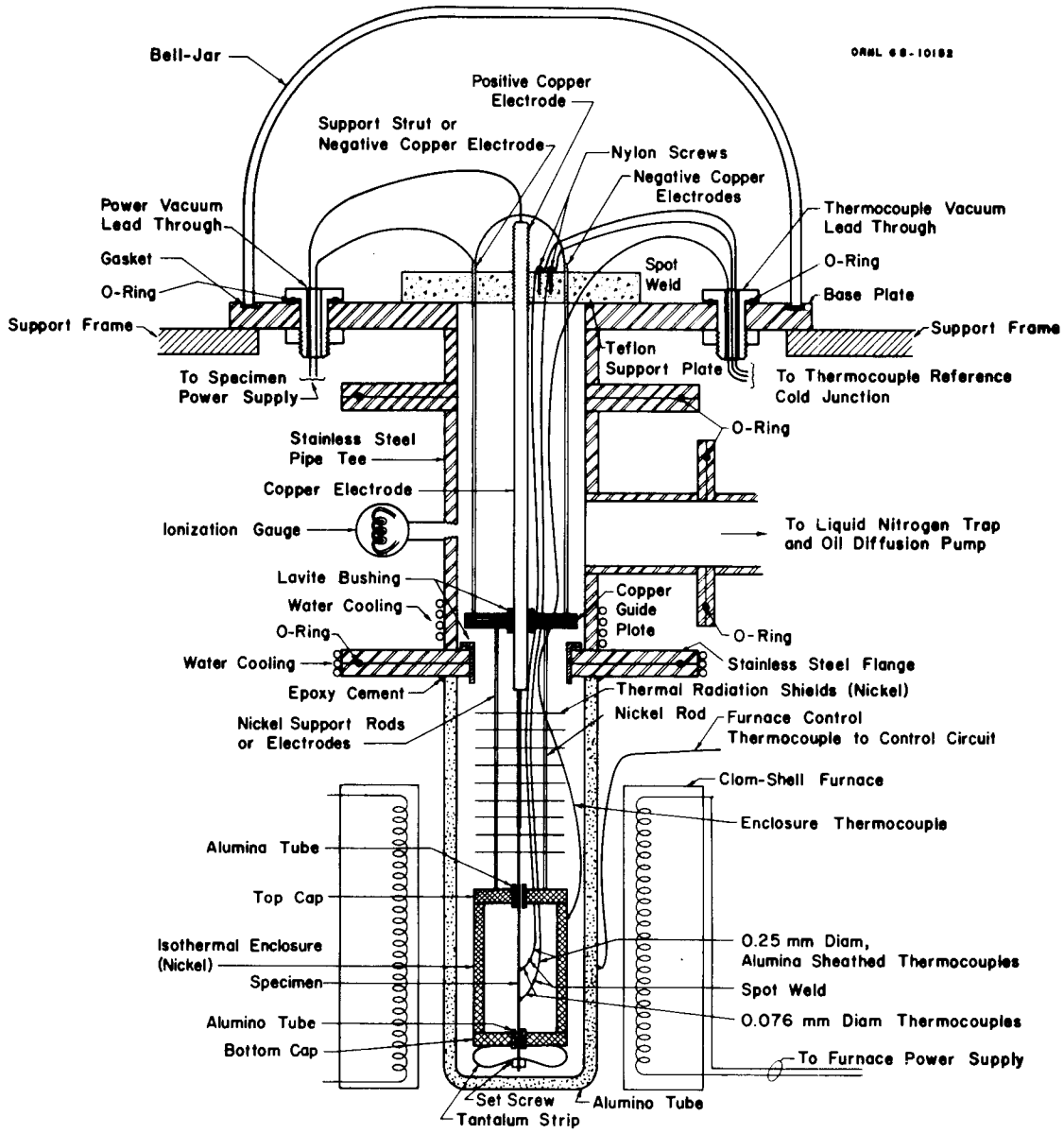

Fig. 2. Schematic Diagram of the Pulse Calorimeter Showing the Vacuum Furnace, Sample-Holder Assembly, and the Specimen.

to the vacuum pumping system and to a base plate,* which served to support the assembly and to provide an exit for the thermocouples and power leads.** The base plate was covered with a bell jar† to provide the necessary vacuum closure.

Pressures of 2×10^{-7} to 2×10^{-8} torr were achieved within the furnace tube by a liquid-nitrogen cold-trapped, oil-diffusion pump.†† Valving was provided in order that the system could be prepumped by the mechanical pump.‡

The temperature of the furnace was controlled in the following manner. A Pt–10% Rh vs Pt thermocouple was attached to the outside of the alumina tube at the center of the furnace. Its output was connected in series opposition with a bias voltage‡‡ whose output was adjusted so that the differential emf between it and the thermocouple was zero when the desired temperature was reached. This differential emf was amplified§ and fed a controller§§ which pulsed the power‖ between two preset levels – one slightly higher and one slightly lower than that required to maintain equilibrium. By this method the temperature control was at least ±0.02 degree at the thermocouple and resulted in control of the specimen within ±0.1 degree over the 1- to 45-min period necessary for the specific heat measurement.

---

*Consolidated Vacuum Corporation, Model 265700 stainless-steel base plate, 51-cm-diam, 2.5 cm thick.

**Consolidated Vacuum Corporation, AE-001-15, 300-amp capacity feedthrough.

†National Research Corporation, 14-in.-nominal diameter, hemispherical bell jar.

††Consolidated Vacuum Corporation, BC-41A liquid-nitrogen baffle with a PMC-4B pump (4-in. nominal diameter).

‡Welch Scientific Company, Model-1402, Duo-Seal pump.

‡‡ORNL Instrumentation and Controls Division, Stable Millivolt Reference Supply, Model Q-2156-2.

§Leeds and Northrup Company, Microvolt Indicating Amplifier, Catalog No. 9835-B.

§§Leeds and Northrup Company, Speedomax H-DAT controller.

‖ORNL Instrumentation and Controls Division, 20 amp, 220-v power control, Model Q-1699-B, modified to allow high-low control by placing shunt resistors in parallel with the control relays.

The Sample-Holder Assembly

The sample-holder assembly was composed of six main parts: a support plate which rested on the base plate; support struts which extended into the furnace and which also served as the negative power lead; a guide plate located at the top of the alumina tube; thermal radiation shields placed within the alumina tube; an isothermal enclosure for the specimen; and specimen and isothermal enclosure thermocouples. This assembly was constructed so that it was extractable from the system as a unit in order to facilitate sample installation and removal. Its overall length was about 1.4 meters.

The support plate was the base from which the position of the specimen in the furnace was fixed. Since it remained at room temperature and had to be an electrical insulator, the support plate was constructed of Teflon.* A 1.3-cm-diam copper rod was threaded into the center of the plate and served as the positive electrode for the pulse power. Four 6.5-mm-diam copper rods were likewise threaded into the support plate and fulfilled the dual role of supporting the lower parts of the assembly and carrying the negative side of the pulse power. All thermocouples were tied down to the plate by means of nylon screws. Such an arrangement facilitated connection to the thermocouple vacuum leadthroughs and supported the thermocouple wires which extended into the furnace. Holes were bored through the plate to enhance the pumping speed of the system.

Copper support struts extended approximately 61 cm from the Teflon plate to a copper plate to which they were bolted. The latter plate was located at the top of the alumina tube and acted as a guide for the lower half of the assembly. Lavite** bushings electrically insulated the guide plate from the stainless-steel flange as well as from the positive electrode which passed through the plate. These bushings were machined to

---

*E. I. du Pont de Nemours and Company, Inc., registered trademark for TFE-fluorocarbon resins.

**American Lava Corporation, Registered trademark for $CaAlSiO_3$ insulators.

allow adequate pumping of the alumina furnace tube. Four 3-mm-diam nickel rods were bolted to the guide plate and to the top cap of the isothermal enclosure. These support rods were approximately 50 cm long, and 20 nickel radiation shields were equally spaced on the rods within the alumina tube. One 4-mm-diam nickel rod was threaded into the positive copper electrode at a point just below the guide plate. The length of this rod depended on the specimen length, and the two were joined by a threaded connection. Usually, this junction was outside the enclosure.

A 25-cm-long, 4.83-cm-o.d., 4.06-cm-i.d. nickel pipe with caps bolted to its ends comprised the isothermal enclosure. The top cap was offset from the pipe by metal washers to ensure adequate vacuum within the enclosure. To prevent shorting of the pulse power through the cap, the sample passed through the top cap in an alumina tube. The bottom of the sample passed through a hole in the bottom cap and into a metal bushing to which good electrical contact was made by a setscrew mounted in the bushing. To complete the electrical circuit, the bushing and bottom cap were spot-welded to a strip of tantalum foil which was shaped to provide a tensile spring action on the sample. This compensated for any differential thermal expansion between the sample and enclosure.

Electrical insulation was provided for all the 0.25-mm-diam thermocouples* by sheathing them in alumina tubing.** To minimize the heat losses through the specimen thermocouples, the sheaths of the specimen thermocouples extended only 5 cm into the enclosure. Four thermocouples were spot-welded to the enclosure, three equally spaced along the side, and one on the top. Four thermocouples entered the enclosure at the top and extended approximately 8 cm into it, where they were spot-welded to the 0.076-mm-diam thermocouples on the specimen.

---

*Sigmund Cohn, annealed, reference-grade Pt–10% Rh vs Pt wire.

**Degussit, AL23 alumina tubing, Catalog No. 072155.

The Specimen

The specimen was nominally 35 cm in length, 2.5 mm in diameter, and was threaded on the upper end for attachment to the positive electrode. It was lapped to a diametral tolerance of ±0.00025 cm to allow an accurate calculation of the test section mass and to produce a mirror surface finish to reduce thermal radiation.

Four 0.076-mm-diam thermocouples,* each 10 mm in length, were tweezer welded to the specimen's surface at 2.5 cm intervals centered about a point which would be in the middle of the enclosure. By observing the welding through a stereomicroscope, the thermocouples were positioned precisely so that each thermoelement was exactly opposite and parallel to its counterpart and so that the hot junction was made through the specimen. This was done to minimize the voltage pickup from the pulse current and to yield more accurate surface temperature measurements. Proper placement was also important because the positive thermoelements (Pt–10% Rh) served as the voltage taps for the pulse-power measurement. Thus, three test sections were available for cross-check measurements of specific heat.

The Thermometry and Power Circuitry**

The specimen thermocouples exited the base plate through epoxy resin seals† and extended to their reference junctions where the required voltage drop and thermal emf connections were made to two multistranded copper cables. As shown in Fig. 3, each cable fed separate switching systems – one to select signals for steady-state potentiometric

---

*Sigmund Cohn, annealed, reference-grade, Pt–10% Rh vs Pt wire.

**Since this circuitry was completely described previously, the details, such as equipment model numbers, are not presented herein. The interested reader is asked to consult references 1 and 2.

†Consolidated Vacuum Corporation, Model AE-009, modified to ensure that no second metal touched the thermocouples.

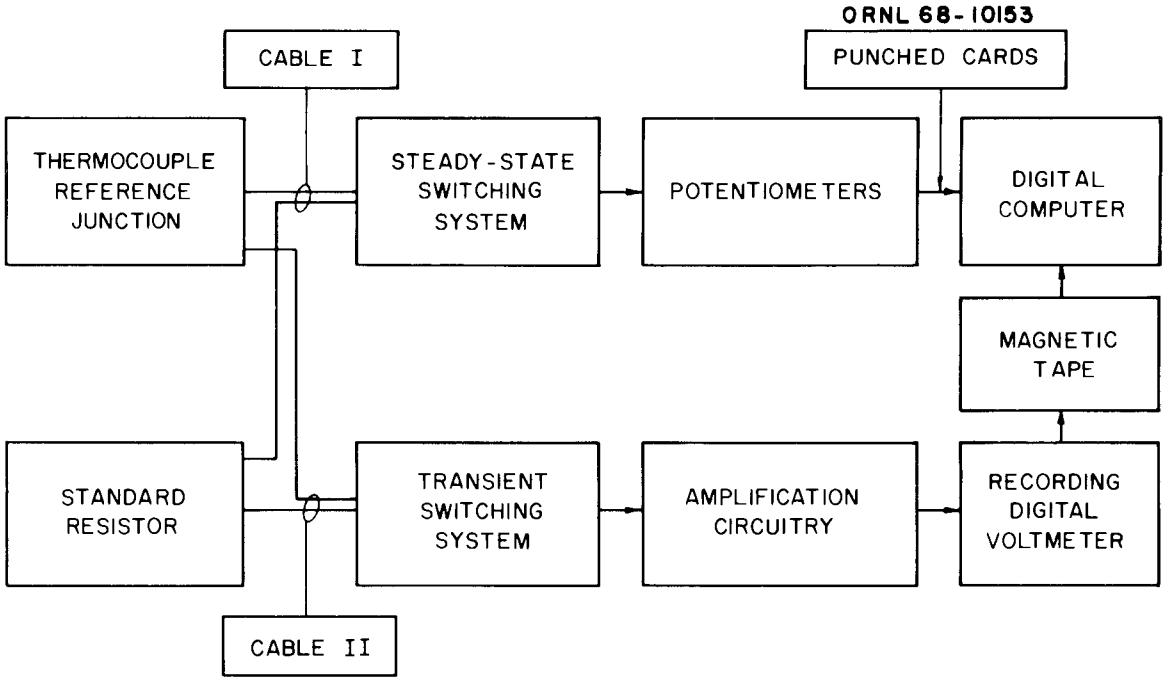

Fig. 3. Block Diagram of the Thermometry and Power Circuitry. Steady-state data were input to computer on cards and transient data on magnetic tape.

measurements* and the other for the transient signal measurement circuitry. Use of two switching systems avoided ground loops and interaction between the potentiometric and transient signal circuitry.

The specimen power source consisted of two voltage-regulated, direct-current power supplies,** which were connected in parallel and which were operated in their constant-current mode. The regulation circuits of the supplies were modified to provide a step-jump in the current. At steady state the total output current was about 3 amp, and the pulse current was adjustable from 1 to 97 amp, 100 amp being the maximum output of the combined supplies.

As depicted in Fig. 4, the power circuitry also included two current-reversing relays, a shunt, and a standard resistor. The purpose of the relays was to allow potentiometric measurements to be made with

---

*Depending on the accuracy desired, either a Leeds and Northrup type K-3 potentiometer or Minneapolis-Honeywell Rubicon-6-dial potentiometer was used.

**Kepco, Incorporated, Model KS-18-50 m.

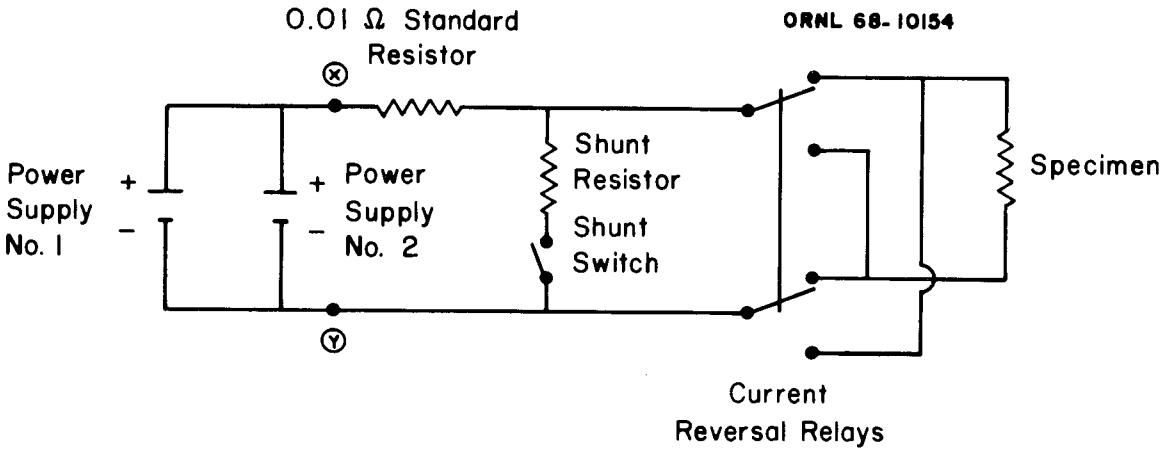

Fig. 4. Schematic Representation of Specimen Power Supply Circuitry. The points X and Y correspond to those in Fig. 5.

the current flowing in either direction through the specimen. This provided data for calculating the voltage pickup by the test section thermocouples from the pulse current because of misalignment of the thermoelement junctions on the specimen. Also, these data were used to correct the measured test section voltage drops for Seebeck-effect induced voltages.

The shunt was wired in parallel with the specimen to prevent a short circuit of the power supply through the relays during reversal and to provide more stable power supply operation by preventing an open circuit during reversal. To accomplish this, the shunt switch was closed before and was opened after the current-reversal relays were activated. By placing the 0.01-Ω standard resistor in series with the specimen, the voltage drop across it was directly proportional to the current flowing through the specimen. Such a transducer was necessary since current could not be measured directly on the DVM and potentiometers.

The Transient Signal Circuitry

Measurement of the test section voltage, current, and temperature during the heat pulse was accomplished using three separate amplification circuits* coupled to a recording digital voltmeter, DVM. As

*See footnote 2, page 10.

shown in Fig. 5, the signals from the transient switching system were placed in series opposition with a bias voltage, and the resulting differential signals connected to the amplifiers. Since the DVM was not portable and was located in a different building than the amplification equipment, tie-in of the three amplification circuits to the DVM was accomplished by means of telecommunication lines.* Due to the 60 Hz noise induced on these lines, it was necessary to employ amplifier gains** of a magnitude so that the transmitted signals changed from 0.5 to 10 v direct current, yielding a large signal-to-noise ratio. To further diminish the noise, each signal was passed through a parallel-T rejection filter network* tuned for 60 Hz rejection. Experiments indicated that the DVM was not as susceptible to the effects of these noises

*See footnote 2, page 10.

**Typically, the temperature amplifier gain was 4×10^3 for a 200-deg pulse. The voltage gain was from 20 to 100, depending on the temperature coefficient of resistivity of the sample. The current gain was 10 for a 90-amp pulse.

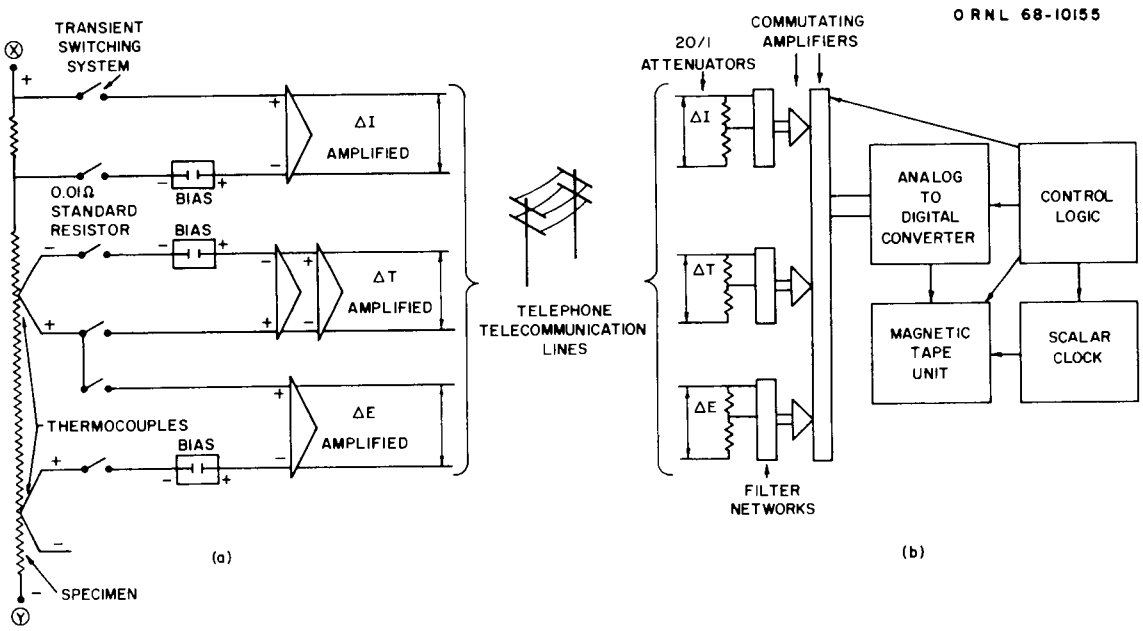

Fig. 5. Schematic Diagram of the Transient Signal Circuitry. (a) The amplification circuitry and (b) the DVM circuits. The circuitry between points X and Y corresponds to that between points X and Y of Fig. 4.

if the commutating amplifiers* of the DVM were operated at a gain of 10. Since the output of the commutating amplifiers had to be 0 to ±5 v, a 20-to-1 attenuator was inserted before each filter network. Also, the high-frequency roll-off band pass of the commutating amplifiers was set at 45 Hz.

The heart of the DVM was the Control Logic which was designed by the Instrumentation and Controls Division of ORNL and which had a 10 kHz crystal clock** for a time base. This logic circuitry channeled the outputs of the commutating amplifiers to an analog-to-digital (A/D) converter† in the sequence temperature, voltage, current at the rate of 2000 readings/sec. The A/D converter subsequently changed each of these analog signals into a form consisting of a sign plus 4 digits, yielding a readability of 0.01% for a full-scale deflection of the DVM. From the A/D converter, the Control Logic fed the digitized signals to a magnetic tape unit†† where they were recorded in a BCD format.

During the free-cooling cycle of the experiment, the logic was modified so that the temperature signal was recorded once per second along with the time elapsed from the start of cooling. This time was measured to the nearest 10 msec by a scalar clock.‡ For the heating pulse, the time was calculated from the time base frequency of 10.0013 kHz, yielding an accuracy of the time during heating and cooling of 0.005%.

PROCEDURE

After instrumenting the specimen and determining the test section lengths and diameters, the specimen was screwed into the positive

---

*Beckman Corporation, Amplexer, Model C44.

**At 23°C, the oscillator was found to have a frequency of 10.0013 kHz by a comparison with a standard traceable to the National Bureau of Standards.

†Beckman Corporation, Model 4040 A/D converter.

††Potter Corporation, Model 906II-1 magnetic tape unit, 7-track, IBM compatible, 200 BPI.

‡Wang Incorporated, gated decade scalar, Model 2029A.

electrode of the specimen-holder assembly; and the four 0.76-mm-diam thermocouples on the specimen were welded to the permanently mounted 0.25-mm-diam thermocouples of the assembly. The nickel cylinder and cap of the isothermal enclosure were positioned about the sample, and the assembly was lowered into the vacuum furnace. After connecting the thermocouple and power lines to the vacuum leadthroughs, the bell jar was placed on the base plate and the chamber was evacuated. Several steps, preliminary to the actual specific heat measurements, were then performed.

First, calibration data for the three amplifier-DVM circuits were acquired by feeding a set of five potentiometrically determined voltages from the bias units to each amplifier and reading each set of amplified signals on the DVM for about 3 sec (6000 readings). Secondly, the power supply regulation circuitry was set to yield the desired specimen heating rate, and the amplifier gains and bias voltage outputs were chosen so that the maximum possible deflections of the DVM occurred during recording of the transient signals. Finally, the furnace was heated to the temperature from which the first heat pulse was to be applied, and a small steady-state current of about 2 amp was passed through the specimen.

Steady-State Measurements

When the specimen had achieved thermal equilibrium, the four specimen thermocouple emf's, the three test section voltages, and the current were measured potentiometrically. The direction of the current through the specimen was reversed and these eight steady-state measurements were repeated.

Transient Measurements

Normally, the temperature and power signals of the central test section were recorded during the transient measurements. Consequently, these signals were fed to the amplification circuits after the steady-state measurements had been completed. Since the transient measurements

were differential, the DVM was started 4 sec prior to the pulse to permit correlation of these data with the steady-state potentiometric measurements. To initiate the heat pulse, a switch in the regulation circuitry of the specimen power supply was thrown, and the step jump in current which occurred produced a specimen heating rate of about 20 degrees/sec. The transient signals which ensued were recorded by the DVM at the rate of 2000 readings/sec for the duration of the pulse which varied from 10 to 35 sec, depending on the specific heat of the specimen, the temperature interval of the pulse, and the current pulse size. When a full-scale deflection of the temperature signal had been achieved on the DVM, all power to the specimen was turned off by opening both pairs of current-reversal relays. As the specimen freely cooled, the temperature-time response of the test section was recorded once per second until the initial steady-state temperature was reached. Cooling times varied from 1 to 60 min, depending primarily on the specimen temperature and the differential temperature between the specimen and enclosure. Upon completion of cooling, the DVM was turned off, one set of current-reversal relays was closed, and the specimen was either allowed to come to thermal equilibrium for a repeat run or the furnace temperature was changed to permit measurements over a different temperature interval. Figure 6 is a schematic illustration of the data obtained on the DVM during a typical pulse.

CALCULATIONS

Due to the large quantity of data collected with the DVM, all calculations were FORTRAN coded for a digital computer.* Two meshed codes were used for these calculations. The first involved raw data treatment and was as follows. After reading the data from the DVM magnetic tape, the computer placed them into arrays of temperature, voltage, and current. Since about 60,000 values were recorded for a 30-sec pulse, the next step was to condense these data as much as

*Both a Control Data Corporation 1604A and an IBM 360/75 computers were used.

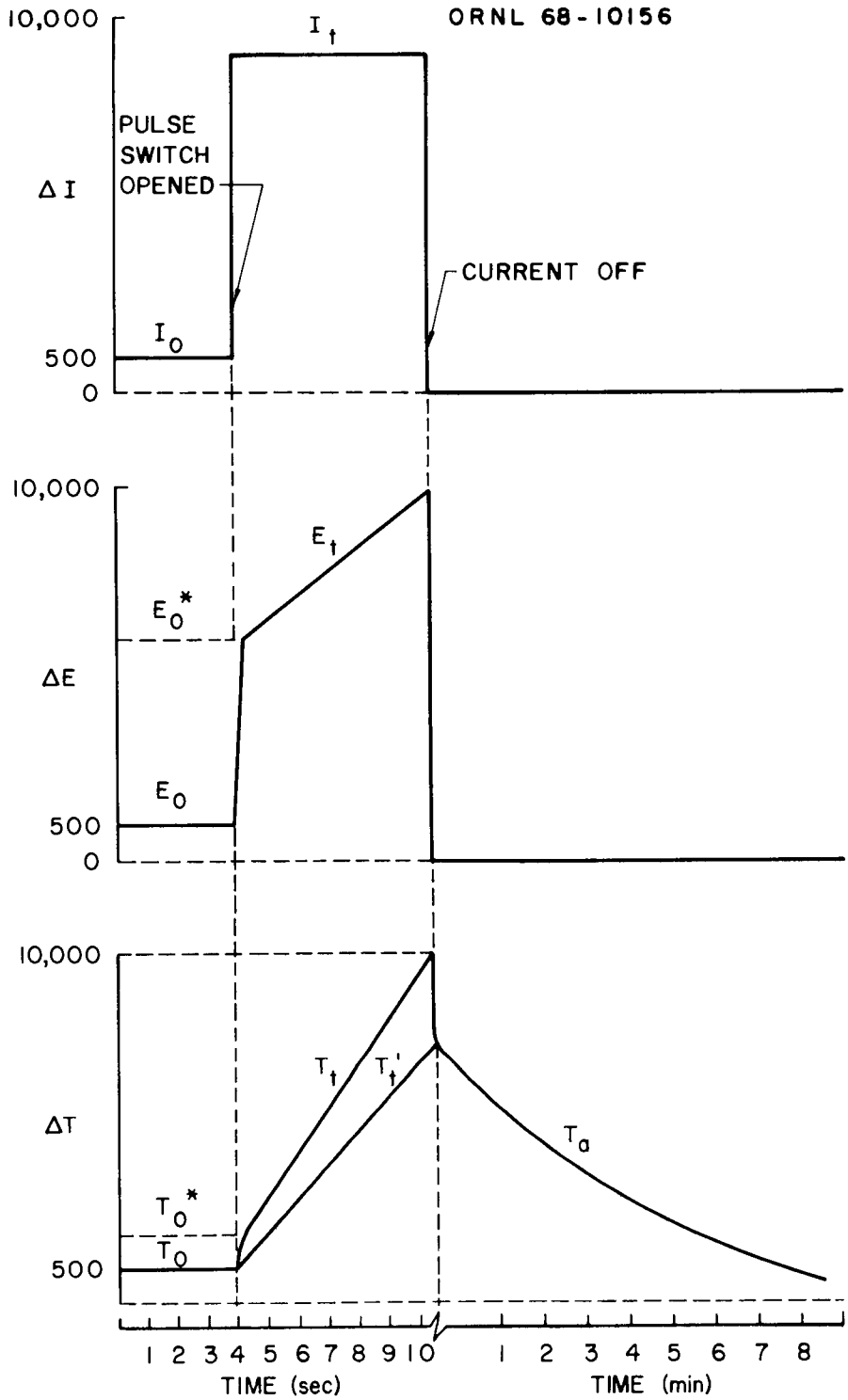

Fig. 6. Schematic Diagram of the DVM Output During a Specific Heat Measurement Showing the Changes that Occur in the Current (ΔI), Voltage (ΔE), and Temperature (ΔT).

possible by either averaging the constant signals or by systematically eliminating data redundancy. Because the calibration signals, the voltage and temperature before the pulse, and the current were constant, each of these sets of signals were arithmetically averaged and every point was checked to ensure that it was within ±1000 DVM units, called counts, of this average. Any point that did not fall within this tolerance limit was discarded and another average calculated. This screening technique was repeated with tolerances of ±200, ±100, and ±10 counts.

For the time-varying signals — namely the temperature and voltage during the pulse — a large data redundancy existed. For example 667 temperature readings/sec were recorded at a heating rate of 20 degrees/sec, yielding a data point every 0.03 degree. Such close proximity of points was indeed redundant for most applications, and consequently the reading rate was effectively reduced to 0.2 degree intervals by arithmetically averaging these data in groups of six points using the screening technique described above. Since the ultimate use of the temperature-time signal was the calculation of the heating rate, dT/dt, the averaged data were smoothed by a least-square technique* in groups of 201 points to a second-order polynomial in time. The temperature-time data taken during the free-cooling cycle were not modified by this code, and they along with the above treated data were written on another magnetic tape for use in the second code.

The purpose of the second code was the calculation of the specific heat and temperature at every temperature data point using Eq. (5), namely

$$C_p = \frac{EI}{m[dT/dt - (dT/dt)_c]} \cdot \qquad (5)$$

The salient features of these calculations are discussed on page 19.

---

*This method, called the "convolute" method, is discussed in general by A. Savitzky and M.J.E. Golay, Some Numerical Operations on Analytical Data (The Perkin-Elmer Corporation, Norwalk, Conn., 1962). A more detailed account can be found in P. G. Guest, Numerical Methods of Curve Fitting (The University Press, Cambridge, 1961). A helpful discussion of orthogonal polynomials for least-squares fitting is given by K. L. Nielsen, Methods in Numerical Analysis (The Macmillan Company, New York, 1956).

Test Section Mass

For the cylindrical specimen of density, ρ, the test section mass was calculated from room-temperature measurements by

$$m = \frac{\pi d^2 \rho \ell}{4} . \tag{6}$$

The test section length, ℓ, was the distance between positive thermoelements of adjacent thermocouples and was determined by a comparative electrical technique before placing the specimen in the isothermal enclosure. At least 16 measurements of the diameter, d, of each test section were made using a light-beam micrometer, and the value of d used in Eq. (6) was the average of these measurements.

Amplifier and DVM Calibration

To allow accurate conversion of the DVM signals into voltages equal to the amplifier inputs, the averaged readings of the temperature, voltage, and current of the DVM taken during the calibration procedure were fitted to a straight line by a least-squares technique.* This resulted in expressions of the form

$$V_i = A_i M_i + B_i \tag{7}$$

for each amplification circuit. The subscripts refer to the particular amplification circuit; B_i and A_i were the least-squares parameters for a particular gain setting; V_i was the value of the input voltage; and M_i was the averaged DVM reading. All calibration data fitted these equations to better than ±0.1%.

---

*A Multiple Regression Method written by the Mathematics Division of ORNL.

Temperature, Voltage, and Current During Heating

The temperature, voltage, and current at any time during the pulse were calculated by adding the transient DVM signals to the averaged values of the steady-state potentiometric measurements. As shown in Fig. 6, the current was constant before and during the pulse; therefore, the total current was given by

$$I = 100[I_p + A_I(I_t - I_0)] \ , \tag{8}$$

where I_p was the averaged steady-state potentiometric reading and I_t and I_0 were the averaged DVM readings during and before the pulse, respectively. The factor of 100 was the proportionality constant to convert these voltage readings, which were measured across the 0.01 Ω standard resistor, into amperes. The quantity A_I was the least-squares parameter obtained from Eq. (7) for the particular current amplifier gain employed. Since the DVM measurements were differential, B_i of Eq. (7) cancelled during this conversion of the DVM signals into voltages.

In a similar manner, the voltage across the test section was

$$E = E_p + A_E(E_t - E_0) \ , \tag{9}$$

where the quantities E_p, A_E, and E_0 were the voltage circuitry equivalent to the similar terms of Eq. (8). Since E_t was a function of time during the pulse, the value of E was determined for every voltage point calculated by the first FORTRAN code described above.

The thermal emf, T_e, of the specimen thermocouple during the pulse was

$$\begin{aligned} T_e &= T_p + A_T[T_t - (E_t - E_0)(T_0^* - T_0)/(E_0^* - E_0) - T_0] \\ &= T_p + A_T[T_t' - T_0] \ , \end{aligned} \tag{10}$$

where T_t was the DVM reading of the thermocouple during the pulse and the quantities T_p, A_t, and T_0 were the temperature circuitry equivalents

of the similar terms of Eq. (8). The term $(E_t - E_0)(T_0^* - T_0)/(E_0^* - E_0)$ corrected the thermocouple signal for voltage picked up from the current flowing through the specimen; hence, T_t' would have been the signal recorded in the absence of pickup. As shown in Fig. 6, the quantities T_0^* and E_0^* were obtained by extrapolating the T_t and E_t curves to the time corresponding to the pulse start.

Heating Rate

The heating rate dT/dt was proportional to the rate of change of the thermocouple emf, dT_e/dt, and was given by

$$dT/dt = S\ dT_e/dt\ . \tag{11}$$

In this equation, S was the reciprocal of the thermocouple sensitivity* for the thermal emf, T_e. A least-squares technique,** commonly called the "convolute" method, was employed to calculate dT_e/dt for every T_e data point obtained with the DVM. In particular, a quadratic convolute with a 101 point group was employed.

Cooling Rate

In order to calculate the cooling rate, $(dT/dt)_c$ it was necessary to calculate first the thermal emf, T_e', of the specimen thermocouple during the cooling cycle using the expression

$$T_e' = T_R + A_T[T_a - T_0]\ . \tag{12}$$

Here, T_a was the DVM reading of the thermocouples during free-cooling of the specimen; T_R was the steady-state potentiometric reading of the thermocouple with the current flowing in the same direction through the specimen as during the heat pulse; and A_T and T_0 are the same as in

---

*An equation derived by D. R. Flynn of the National Bureau of Standards (private communication, 1963) was used to convert the thermal emf's of the Pt–10% Rh vs Pt thermocouples into temperature.

**See footnote page 18.

Eq. (10). The temperature, T_c, corresponding to each value of T'_e was then calculated.* At this point in the calculation, these data had not been checked for spurious values. To do this, a least-squares technique** was employed to fit the data in temperature intervals of 100 degrees or less to an equation of the form

$$T_c = a + bt + ct^2 \quad , \tag{13}$$

where a, b, and c were the parameters obtained from the fit. Every point was checked to ensure that it was within ±30 degrees of this curve. If it was not, its value was replaced in computer memory by the least-square point and the fit performed again. This screening procedure was repeated with tolerances of 5 and 1 degrees. The parameters obtained on the last tolerance were used to calculate the cooling rate by

$$(dT/dt)_c = b + 2ct \tag{14}$$

and was applicable only in the temperature interval of the fit.

Specific Heat

Combining Eqs. (5), (6), (8), (9), (11), and (14), the expression for the specific heat was

$$C_p = \frac{EI}{m[dT/dt - (dT/dt)_c]}$$

$$= \frac{400[E_p + A_E(E_t - E_0)][I_p + A_I(I_t - I_0)]}{\pi d^2 \rho \ell [S\ dT_e/dt - (b + 2ct)_{T'_e}]_{T_e = T'_e}} \quad , \tag{15}$$

where all quantities are taken at the same temperature. From this differential equation, the specific heat was obtained for every value of dT_e/dt which had been calculated. Portions of two typical sets of data are shown in Fig. 7, showing the excellent repeatability and close

*See footnote 1, page 21.

**See footnote page 19.

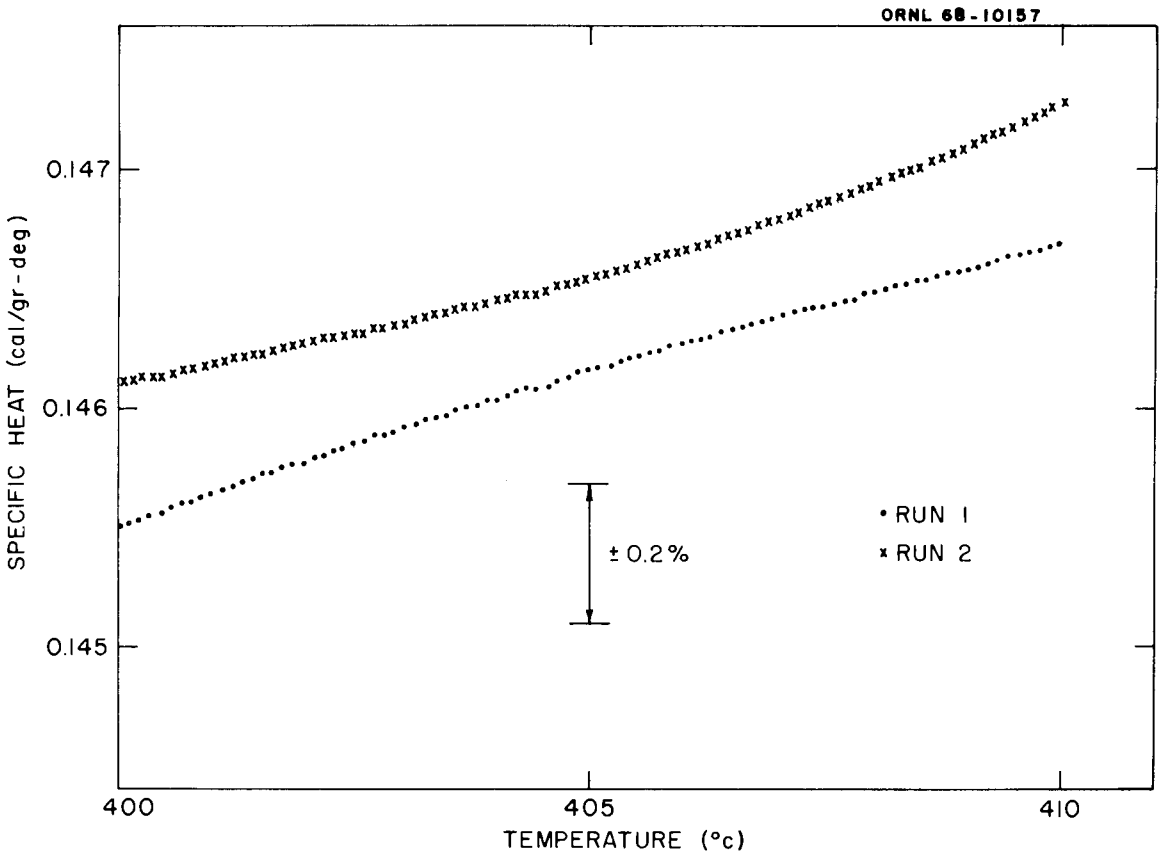

Fig. 7. Portion of a Typical Set of Specific Heat Data Which Illustrates the Excellent Repeatability of the Technique. These data were taken on a 0.218-cm-diam pure iron sample. Run 1 was taken with a heating rate of 12.05 degrees/sec, a cooling rate of 0.23 degree/sec, a total current of 83.985 amp, and an enclosure temperature of 315°C. Run 2 was taken with a heating rate of 11.93 degrees/sec, a cooling rate of 0.43 degree/sec, a total current of 83.881 amp, and a furnace temperature of 155°C. The data points of both runs are separated approximately 0.10 degree.

proximity of the specific heat values obtained with this technique. Also noticeable in this figure is a slightly different temperature dependence of the data. If the plot were extended for 20 more degrees, the variations in each curve would appear somewhat sinusoidal, a characteristic directly traceable to the method of calculation of dT_e/dt and the small irregularities inherent in digitized data. Due to the small amplitude of the variation, it did not affect the overall C_p-T curve.

ACCURACY

The accuracy of an experimental technique may be evaluated by either determining the total error of all the quantities which are measured or by measuring on a standard. In the first method, the errors of measurement of all the quantities in Eq. (15) must be assessed. This was done previously[1,2] and was found to be ±1.05% when the power loss was less than 10% of the input power.

Regarding the method using a standard, no electrically conducting material is widely accepted as a standard for specific heat above 300°K. In fact the question, "What characteristics should a high-temperature specific heat standard possess?" is indeed moot. However, a number of pure elements have been measured extensively by numerous investigators using quite different techniques. In particular, the specific heat of pure iron has been measured by Anderson and Hultgren[3] and Olette and Ferrier[4]* using drop calorimetry; by McElroy,[5] Braun,[6] and Dench and Kubaschewski[7] using adiabatic calorimetry; and by Kollie,[1,2] Pallister,[8] Esser and Baerlecken,[9] and Wallace, Sidles, and Danielson[10] using variations of pulse calorimetry. Other investigators have measured the specific heat of iron, but these are not discussed herein.

Accurate determination of the specific heat of iron at high temperature presents a challenge. Iron undergoes a Curie transformation at about 765°C that gives rise to a large maximum in the specific heat, and the allotropic transformations at about 910 and 1395°C create discontinuities in the specific heat. For these reasons and due to the ready availability of the material, measurements were made on pure iron from 100 to 1200°C, and these data are presented in Fig. 8 and Table I.**

Due to the compressed scale of Fig. 8 and in order to accentuate the disparities between the various investigations, the data are presented

---

*The data plotted in Fig. 8 were obtained by fitting their reported enthalpy data to the equation

$$H - H_\theta = 147.6 + 0.1420\,(T - 910) + 2.537 \times 10^{-5}\,(T - 910)^2$$

where T is in degrees centigrade. All points fall within ±1% of this curve.

**No theoretical implications of these data are given herein, but will be the subject of a forthcoming paper by the authors.

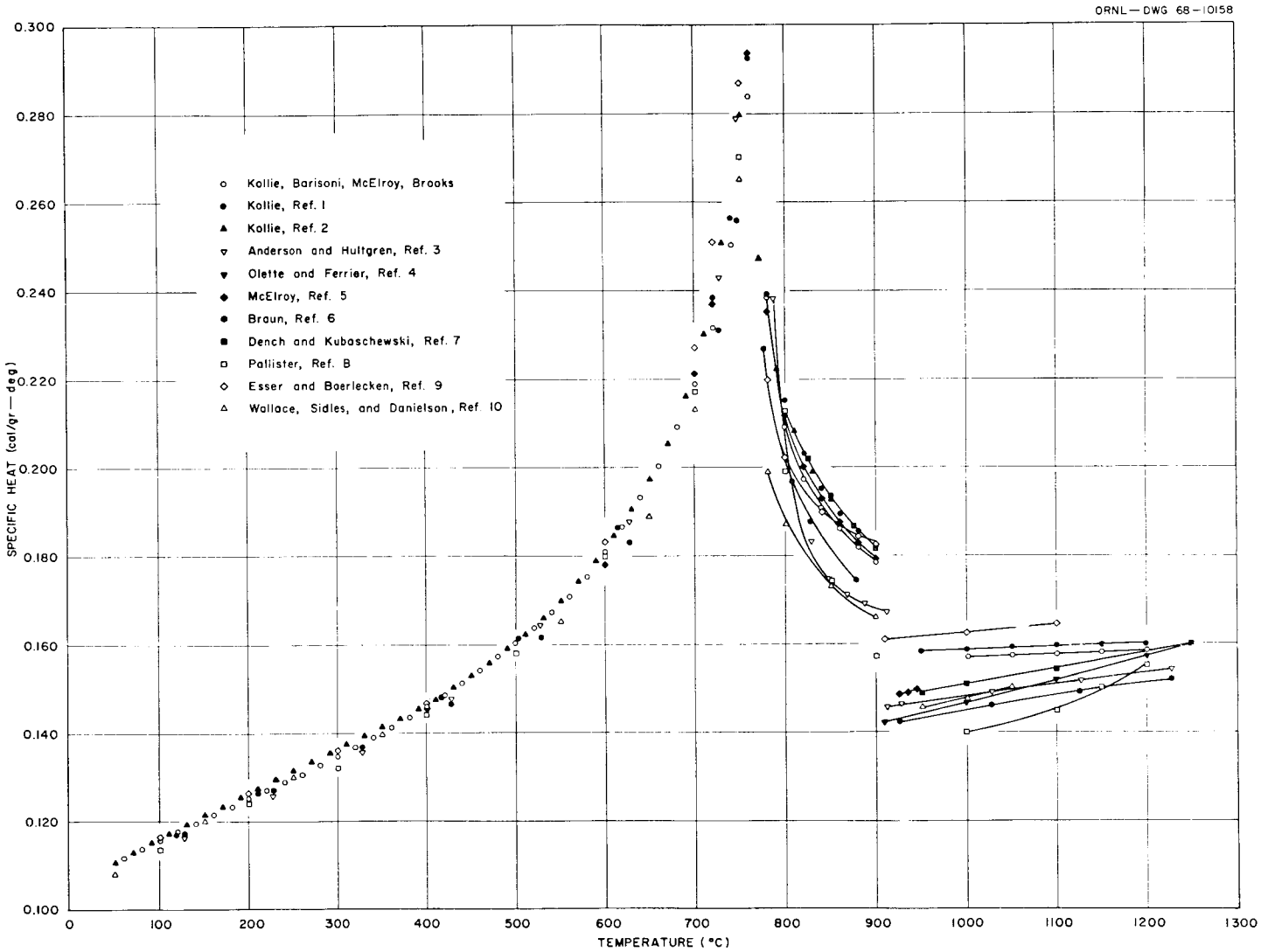

Fig. 8. The Specific Heat of Pure Iron from 100 to 1200°C as Determined from this Investigation and those of Eight Other Investigators.

Table 1. The Specific Heat of Pure Iron
As Determined by the Authors

Temperature (°C)	Specific Heat (cal/gr-deg)	Temperature (°C)	Specific Heat (cal/gr-deg)
60	0.1116	520	0.1636
80	0.1135	540	0.1671
100	0.1154	560	0.1708
120	0.1174	580	0.1752
140	0.1193	600	0.1806
160	0.1212	620	0.1865
180	0.1231	640	0.1931
200	0.1250	660	0.2003
220	0.1269	680	0.2093
240	0.1288	700	0.2191
260	0.1307	720	0.2318
280	0.1327	740	0.2504
300	0.1346	760	0.2838
320	0.1367	780	0.2383
340	0.1389	800	0.2093
360	0.1411	820	0.1975
380	0.1434	840	0.1910
400	0.1458	860	0.1860
420	0.1483	880	0.1818
440	0.1510	900	0.1785
460	0.1540		
480	0.1570	1000	0.1569
500	0.1603	1050	0.1573
		1100	0.1576
		1150	0.1579
		1200	0.1583

in Fig. 9 as a difference plot based on measurements with the technique described herein. Between 100 and 550°C the data of all these investigations differ by ±2.1% and from 550 to 740°C differ by ±4.5%. Above 740°C, these data diverge rapidly to more than ±10% at 780°C. This disparity persists to about 910°C, the α-γ transformation.* Undoubtedly these large differences are associated with amplification of measurement errors in the vicinity of the maximum at the Curie temperature, T_c. However, a portion of these differences may be due to impurities in the samples which are known to shift the Curie temperature. Although variations of as much as ±5 degrees in the Curie temperature have been reported, it is unlikely that this effect is very important except within a few degrees of the transition because a shift in temperature of five degrees at 780°C, ten degrees above the highest T_c value reported, causes only a 4% shift in the specific heat.

Above 910°C, the agreement between investigators is no better than ±10%. What is most disconcerting is the lack of agreement in the temperature coefficient of the specific heat in this temperature range. Undoubtedly, these differences are due to improper corrections for radiative heat losses which are very large at temperatures above 900°C, even for small temperature differences between a sample and its surroundings.

Since the claimed accuracy of the other investigators was no more than 99%, these measurements on pure iron definitely established the calculated accuracy of 98.95% below 740°C. Between 790 and 910°C, the data of McElroy,[5] Dench and Kubaschewski,[7] and Esser and Baerlecken,[9] and the previous measurements by Kollie[1,2] are in agreement to better than ±2.5%, which tends to extend the calculated accuracy to at least 910°C. Above 1000°C, the measurements with this device are in excellent agreement with those obtained previously by Kollie[1] and agree within ±3.0% with those of most of the investigators shown in Fig. 8, but they possess a significantly different temperature dependence. Therefore, it is postulated that these measurements established an accuracy of about 98% for temperatures above 1000°C.

---

*Body-centered cubic α, transforms to face-centered cubic, γ, iron.

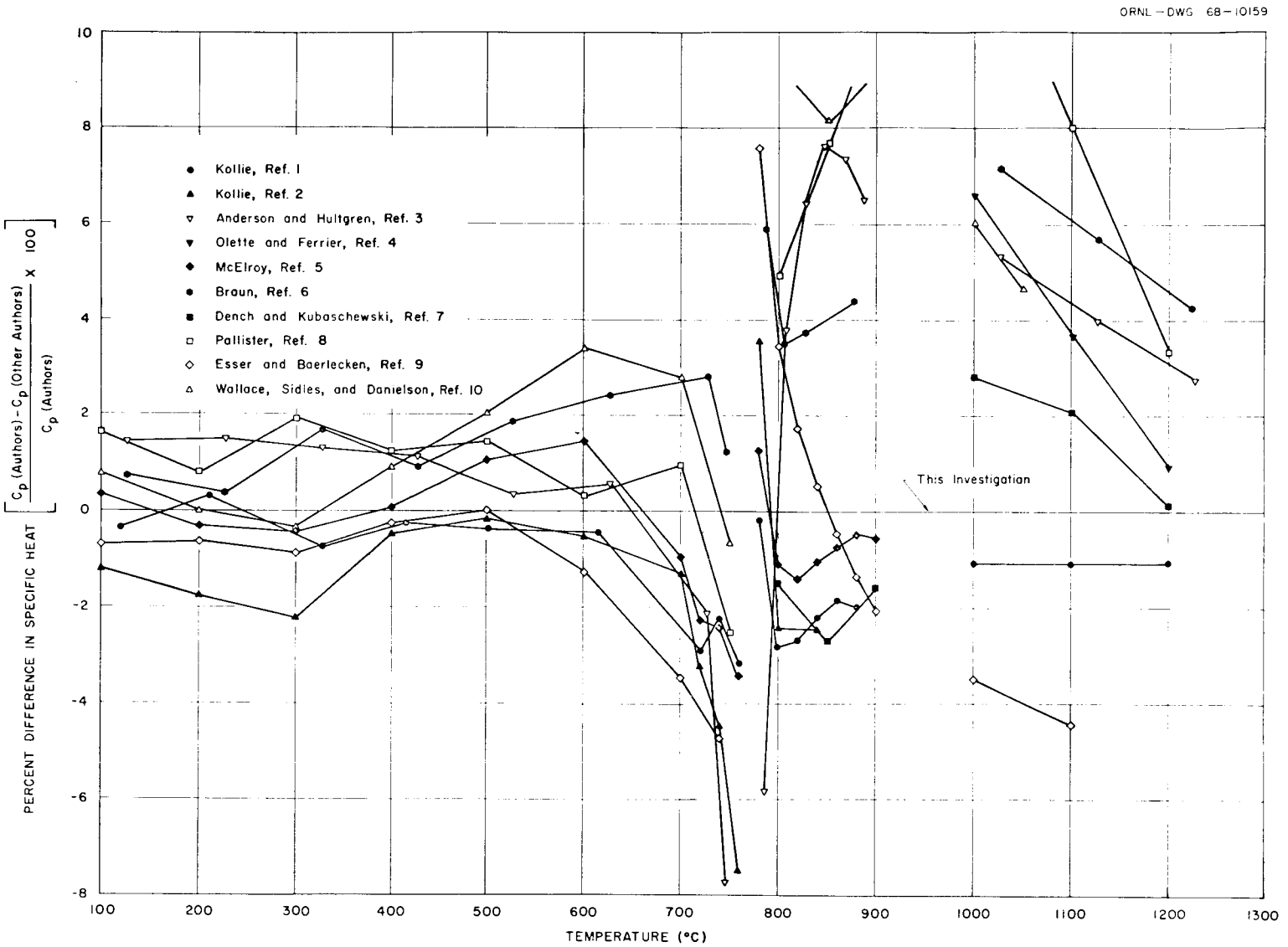

Fig. 9. A Difference Plot of the Specific Heat Values of the Eight Literature Sources Based on the Data Obtained by this Technique Between 100 and 1200°C.

One other point can be made in regard to the accuracy of this method. In any experimental measurement, if the results are repeatable, the accuracy of the technique is usually very good, and conversely. Throughout these measurements, the repeatability was at least ±0.5% even when large changes were made in the procedural variables such as furnace temperature and cooling rate (see Fig. 7).

CLOSURE

The equipment, measurements, and calculations requisite to a pulse-heating calorimetric technique for measuring the specific heat of electrical conductors over a wide temperature range have been presented. The accuracy and reproducibility of the technique were demonstrated by measurements from 100 to 1200°C on pure iron and by subsequent comparisons with other literature values.

This technique possesses two salient features. The first is the ability to obtain specific heat values very closely spaced in temperature (e.g., 0.03 degree with a heating rate of 20 degrees/sec). Such close proximity of the data has led to the hypothesis that the specific heat of iron is discontinuous at the Curie point.[1] To arrive at this conclusion, the slope of the temperature signal on the DVM was adjudged to be discontinuous at T_c. A portion of a typical set of DVM data is plotted in Fig. 10 for a pulse through the Curie transformation.

The second beneficial characteristic of the technique is the simultaneous measurement of specific heat and electrical resistivity. This is advantageous because it allowed a check of the thermocouple since electrical resistivity data were available from auxiliary measurements; it also provided data on two physical properties which are sensitive to structure changes, such as order-disorder and allotropic transformations. Also, measured differences in the steady-state resistivity of adjacent test sections gave good indication that a contact point had shifted on a thermocouple, and also provided a means to correct the mass for this change in test section length. This method may be extended to higher temperatures using the electrical resistivity of the sample as a temperature transducer. Extension to lower temperatures (77°K) only requires use of a different type of thermocouple.

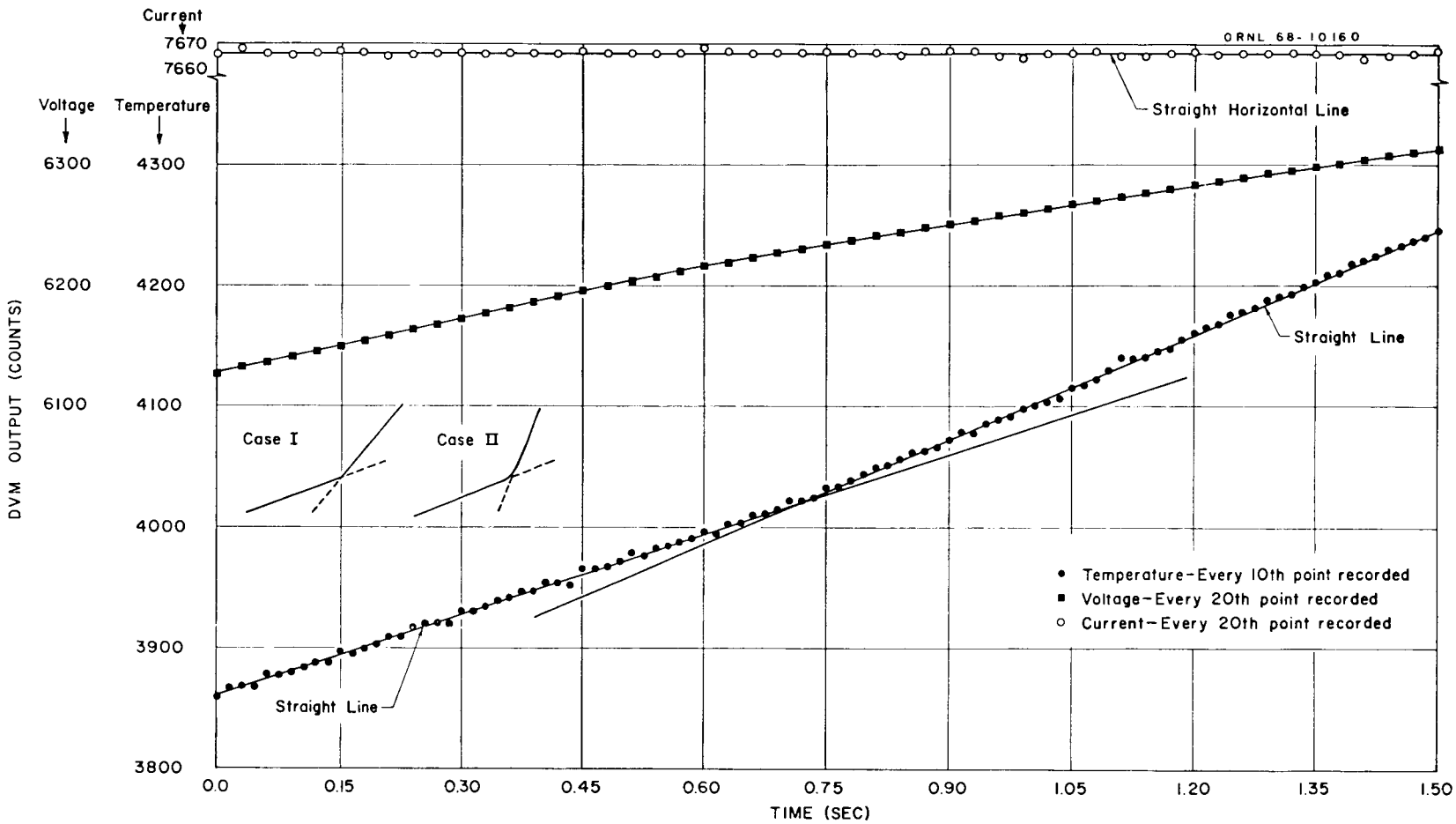

Fig. 10. Portion of a DVM Output for a Run Through the Curie Point. Case I indicates the shape of the temperature-time relationship at the Curie temperature if the specific heat is discontinuous. Case II indicates the time-temperature relationship for a continuous specific heat.

ACKNOWLEDGMENTS

The authors wish to acknowledge R. K. Adams, R. L. Simpson, J. D. Burke, and R. R. Gaddis for providing, maintaining, and operating the digital voltmeter circuitry.

REFERENCES

1. T. G. Kollie, M.S. Thesis, the University of Tennessee, 1965; also ORNL-TM-1187.
2. T. G. Kollie, Rev. Sci. Instr. 38, 1452 (1967).
3. P. D. Anderson and R. Hultgren, Trans. Met. Soc. AIME 224, 842 (1962).
4. M. Olette and A. Ferrier, NPL Symposium No. 9 2, 100 (1958).
5. D. L. McElroy, Ph.D. Thesis, the University of Tennessee, 1957.
6. M. Braun, Ph.D. Thesis, the University of Köln, 1964.
7. W. A. Dench and O. Kubaschewski, J. Iron Steel Inst. (London) 201, 140 (1963).
8. P. R. Pallister, J. Iron Steel Inst. (London) 161, 87 (1949).
9. H. Esser and E. F. Baerlecken, Arch. Eisenh. 14, 617 (1941).
10. D. C. Wallace, P. H. Sidles, and G. C. Danielson, J. Appl. Phys. 31, 168 (1960).

ORNL-4380
UC-25 – Metals, Ceramics, and Materials

INTERNAL DISTRIBUTION

1–3. Central Research Library
4–5. ORNL – Y-12 Technical Library Document Reference Section
6–25. Laboratory Records Department
26. Laboratory Records, ORNL RC
27. ORNL Patent Office
28. G. M. Adamson, Jr.
29. B. S. Borie
30–31. M. Barisoni
32. C. M. Blood
33. G. E. Boyd
34. R. H. Busey
35. A. K. Chakraborty
36. F. E. Clark (9203, Y-12 Plant)
37. T. F. Connolly
38. J. W. Cooke
39. J. E. Cunningham
40. G. Czjzek
41. H. L. Davis
42. R. W. Derby
43. J. H Frye, Jr.
44. R. E. Gehlbach
45. R. A. Gilbert
46. T. G. Godfrey
47. R. W. Hendricks
48. P. G. Herndon
49–51. M. R. Hill
52. H. W. Hoffman
53. H. F. Holmes
54. E. E. Kitchen
55. C. C. Koch
56–65. T. G. Kollie
66. C. E. Larson
67. H. G. MacPherson
68–69. D. L. McElroy
70. C. J. McHargue
71. J. P. Moore
72. G. F. Petersen
73. K. E. Spear
74. J. E. Spruiell
75. D. A. Sundberg
76–123. D. B. Trauger
124. R. S. Valachovic
125. A. M. Weinberg
126. R. W. Williams
127. A. Wolfenden
128. C. M. Adams, Jr. (consultant)
129. Leo Brewer (consultant)
130. L. S. Darken (consultant)
131. J. A. Krumhansl (consultant)

EXTERNAL DISTRIBUTION

132–136. C. R. Brooks, Chemical and Metallurgical Engineering Department, the University of Tennessee
137. D. F. Cope, RDT, SSR, AEC, Oak Ridge National Laboratory
138. B. F. Oliver, Chemical and Metallurgical Engineering Department, the University of Tennessee
139. J. M. Simmons, Division of Reactor Development and Technology, AEC, Washington
140. E. E. Stansbury, Chemical and Metallurgical Engineering Department, the University of Tennessee
141. D. K. Stevens, Division of Research, AEC, Washington
142. Laboratory and University Division, AEC, Oak Ridge Operations
143-339. Given distribution as shown in TID-4500 under Metals, Ceramics, and Materials category