LOCKHEED MARTIN ENERGY RESEARCH LIBRARIES
3 4456 0515832 5

ORNL-4214
Special

cy. 2

OFFICE OF SALINE WATER

STUDY OF 250-Mgd MULTISTAGE FLASH DISTILLATION PLANT WITH TWO-LEVEL BRINE FLOW

Part One: Design and Cost Estimate

Part Two: Preliminary Engineering Analysis and Capital Cost Estimate

OAK RIDGE NATIONAL LABORATORY
CENTRAL RESEARCH LIBRARY
DOCUMENT COLLECTION
LIBRARY LOAN COPY
DO NOT TRANSFER TO ANOTHER PERSON
If you wish someone else to see this document, send in name with document and the library will arrange a loan.
UCN-7969
(3 3-67)

OAK RIDGE NATIONAL LABORATORY
operated by
UNION CARBIDE CORPORATION
for the
U.S. ATOMIC ENERGY COMMISSION

LEGAL NOTICE

This report was prepared as an account of Government sponsored work. Neither the United States, nor the Commission, nor any person acting on behalf of the Commission:

A. Makes any warranty or representation, expressed or implied, with respect to the accuracy, completeness, or usefulness of the information contained in this report, or that the use of any information, apparatus, method, or process disclosed in this report may not infringe privately owned rights; or

B. Assumes any liabilities with respect to the use of, or for damages resulting from the use of any information, apparatus, method, or process disclosed in this report.

As used in the above, "person acting on behalf of the Commission" includes any employee or contractor of the Commission, or employee of such contractor, to the extent that such employee or contractor of the Commission, or employee of such contractor prepares, disseminates, or provides access to, any information pursuant to his employment or contract with the Commission, or his employment with such contractor.

LOCKHEED MARTIN ENERGY RESEARCH LIBRARIES

3 4456 0515832 5

ORNL-4214

AEC-Department of the Interior
Interagency Agreement 40-50-65
OSW Agreement No. 14-01-0001-534

OFFICE OF SALINE WATER

Study of 250-Mgd Multistage Flash Distillation Plant with Two-Level Brine Flow

Part One: Design and Cost Estimate

S. J. Senatore
J. A. Smith

Part Two: Preliminary Engineering Analysis and Capital Cost Estimate

BECHTEL CORPORATION
San Francisco, California

NUCLEAR DESALINATION PROGRAM

R. P. Hammond, Director
J. A. Parsons, Deputy Director
I. Spiewak, Deputy Director

JANUARY 1969

OAK RIDGE NATIONAL LABORATORY
Oak Ridge, Tennessee
operated by
UNION CARBIDE CORPORATION
for the
U. S. ATOMIC ENERGY COMMISSION

Under Contract No. W-7405-eng-26

FOREWORD

This study by the Oak Ridge National Laboratory and by Bechtel Corporation is an attempt to evaluate the technology and cost of large multistage flash evaporators being developed by the Office of Saline Water. The design is limited to features which have been displayed in previous OSW studies, or which were under active development by OSW contractors in 1967. The maturation of these programs should enable such plants to be built and operated, within the estimated costs, during the 1975-80 period.

The design concept was originated by ORNL; Bechtel provided an engineering review of the concept. Following this review, a reference design was established which both engineering organizations consider to be feasible. Bechtel developed a capital cost estimate of the reference design.

This report contains ORNL's description of the reference design followed by Bechtel's engineering review and cost estimate.

PART ONE

ACKNOWLEDGMENT

The authors acknowledge the efforts of J. W. Gregory, R. C. Orrin, S. W. Fiveash, T. L. Morton, and L. H. Barnett for the design layout; of R. A. Ebel and H. M. Noritake for the flowsheet and computer program development; of R. Van Winkle for the tube bundle design; and of J. A. Parsons and I. Spiewak for their supervision and wise guidance.

CONTENTS

PART ONE

FOREWORD iii
ACKNOWLEDGMENT v
1. INTRODUCTION 1
2. SUMMARY AND CONCLUSIONS. 1
3. PLANT COSTS. 7
3.1 Capital Cost. 7
3.2 Operating Costs 7
4. PROCESS FLOW DESCRIPTION 7
5. PLANT SYSTEMS AND COMPONENTS 15
5.1 Chemical Systems. 15
5.2 Pumps and Drives. 17
5.3 Tubing. 19
5.4 Materials Selection 19
6. DESIGN DATA. 19
6.1 Structural Design 19
6.2 Flash Chamber Design. 25
6.3 Deaerator Design. 29
6.4 Electrical Design 31
6.5 Instrumentation and Control 32
6.6 Valves and Piping 33
6.7 Tube Bundle Design. 34
7. REFERENCES 36
APPENDIXES
A. Computer Printouts 39
B. Design Drawings. 49

PART TWO

FOREWORD 80
1. INTRODUCTION AND SUMMARY 81
1.1 Statement of Services 81
1.2 Summary of Capital Costs 82
1.3 Technical Evaluation 83
1.4 Appendixes 85

CONTENTS (continued)

2. CAPITAL COST ESTIMATE 86
2.1 Bases for Estimate 86
2.2 Qualifications of Estimate 88
2.3 De-Escalation 89
2.4 Unit Costs 89
3. TECHNICAL EVALUATION 96
3.1 General 96
3.2 Civil-Structural 97
3.3 Mechanical 111
3.4 Instrumentation and Control 122
3.5 Electrical 144
3.6 Materials 148
APPENDIXES
A. Site Data 155
B. Codes and Standards 159
C. Civil-Structural Analysis 168

LIST OF TABLES

PART ONE

Table No.	Title	Page No.
1	Summary of MSF Plant Parameters	3
2	Ground Rules and Assumptions	6
3	Annual and Unit Cost Breakdown for 250-Mgd MSF Plant	8
4	Annual Operating and Maintenance Labor Cost Estimate	9
5	Stage Parameters	14
6	Materials of Construction of 250-Mgd Multistage Flash Evaporator Plant	20
7	Plant Stepping Required for 9-In.-High Orifice Opening	28
8	Summary of Calculated Condenser Bundle Performance Characteristics	37

PART TWO

2-1	Capital	91
C-1	Dead Load Summary	183

LIST OF FIGURES

PART ONE

Figure No.	Title	Page No.
1	Basic Flow Diagram for Study of 250-Mgd MSF Distillation Plant	11
2	Deaerator Flow Sheet for Study of 250-Mgd MSF Distillation Plant	30
	PART ONE, APPENDIX B, DESIGN DRAWINGS	
E-E34787A	250-Mgd MSF Plant, 1967 Technology, One-Line Diagram	51
E-I34787A1	Instrument Application Diagram, Typical Train	52
C-I34787A2	Instrument Application Diagram, Seawater Makeup Acid Addition System	53
C-I34787A3	Instrument Application Diagram, Seawater Makeup Antifoam Addition System	54
C-I34787A4	Instrument Application Diagram, Seawater Makeup Caustic Addition System	55
D-I34787A6	Instrument Application Diagram, Seawater Intake Chlorination System	56
E-P34787A	250-Mgd MSF Plant, 1967 Technology, Flow Sheet	57
E-P34787B	250-Mgd MSF Plant, 1967 Technology, Plant Location	58
E-P34787C	250-Mgd MSF Plant, 1967 Technology, Part Plan 1, 2 Trains	59
E-P34787D	250-Mgd MSF Plant, 1967 Technology, Part Plan 2, 2 Trains	60
E-P34787E	250-Mgd MSF Plant, 1967 Technology, Longitudinal Section	61
E-P34787F	250-Mgd MSF Plant, 1967 Technology, Sections	62
E-P34787G	250-Mgd MSF Plant, Brine Heater Assembly and Details	63
E-P34787H	250-Mgd MSF Plant, 1967 Design, Acid Injector Details	64

Figure No.	Title	Page No.
C-P34787J	250-Mgd MSF Plant, 1967 Design, Seawater Chlorination	65
C-P34787K	250-Mgd MSF Plant, 1967 Design, Caustic Addition	66
C-P34787L	250-Mgd MSF Plant, 1967 Design, Antifoam Addition, Flow Sheet	67
C-P34787M	250-Mgd MSF Plant, 1967 Design, Sulfuric Acid System, Flow Sheet	68
D-P34787N	250-Mgd MSF Plant, 1967 Technology, 250°F Flow Diagram	69
E-P34787S	250-Mgd MSF Plant, 1967 Technology, Stages 1-25, Tube Sheet Detail	70
E-P34787T	250-Mgd MSF Plant, 1967 Technology, Stages 26-48, Tube Sheet Detail	71
E-P34787U	250-Mgd MSF Plant, 1967 Technology, Stages 49-50 Tube Sheet Detail	72
E-S34787A2	250-Mgd MSF Plant, 1967 Technology, with Revised Tube Bundle, Plan	73
E-S34787B2	250-Mgd MSF Plant, 1967 Technology, with Revised Tube Bundle, Typical Steel Sections	74
E-S34787C2	250-Mgd MSF Plant, 1967 Technology, with Revised Tube Bundle, Longitudinal Section	75
E-S34787D2	250-Mgd MSF Plant, 1967 Technology, with Revised Tube Bundle, Typical Conc. Section	76
E-S34787E2	250-Mgd MSF Plant, 1967 Technology, with Revised Tube Bundle, Typical Module Plan and Details	77
E-S34787F1	250-Mgd MSF Plant, 1967 Technology, Site Plan	78

PART TWO

3-1	Evaporator Plan	104
3-2	Longitudinal Section 1	105
3-3	Longitudinal Section 2	106
3-4	Typical Concrete Sections	107
3-5	Specific Sections	108

Figure No.	Title	Page No.
3-6	Typical Module Plan and Details	109
3-7	Evaporator Part Plan	110
3-8	Effect of Product Temperature on Surface Area	120
3-9	Effect of Product Temperature on Pump Horsepower and Flow Rates	121
3-10	Instrumentation and Control Diagram	125
3-11	Data Acquisition System Block Diagram	128
3-12	Caustic Addition System - Instrumentation and Control Diagram	133
3-13	Acid Addition System - Instrumentation and Control Diagram	134
3-14	Anti-Foam System - Instrumentation and Control Diagram	137
3-15	Sodium Sulfite Addition System - Instrumentation and Control Diagram	138
3-16	Seawater Chlorination System - Instrumentation Control Diagram	139
3-17	Electrical Power System - One Line Diagram-Alternate Design	146
3-18	Electrical Power System - One Line Diagram-Revised ORNL Reference Plant	147
A-1	Hypothetical Site Location	157
A-2	Typical Geological Cross Section	160
A-3	Southern California Fault Zones	161
C-1	Shape of Longitudinal Frame After Expansion	187
C-2	Load Summary - Steel Stage	189
C-3	Frame Analysis of Lateral Load	191
C-4	Barrel-Vault Shell Structure	205
C-5	Load Summary - Concrete Stage	234

1. INTRODUCTION

The Oak Ridge National Laboratory (ORNL) has made this study for the Office of Saline Water (OSW) to reflect technology being developed as of 1967, applicable to a 250-million-gallons-a-day (250-Mgd) multistage flash (MSF) distillation plant.

The scope of this effort included the development of cost and descriptive information for a 250-Mgd evaporator of potential use in 1975-1980, plus administration of a subcontract with the Bechtel Corporation for engineering analysis of the ORNL design and development of a capital cost estimate. After the Bechtel review, revisions to the design were developed by mutual agreement and were incorporated into the reference design for this report and for the cost estimates. Specifically, the study included the following:

1. Development of design criteria based on OSW's ground rules and on the assumption that the plant would be located in southern California (Section 2).

2. Preparation of cost estimates, including capital, operating, and maintenance costs (Section 3), as well as unit water costs. Capital costs were developed by Bechtel Corporation (Part Two of this report), and for the sake of consistency, their cost estimates are used throughout the report.

3. Description of process flow and development of a process flow sheet (Section 4).

4. Description of plant systems and components (Section 5).

5. Description of plant design concept and development of conceptual design and detail drawings (Section 6 and Appendix B).

2. SUMMARY AND CONCLUSIONS

ORNL has designed and obtained cost estimates for a 250-Mgd multistage flash desalination plant which is coupled to one 2500-Mwt boiling-water reactor. The design is considered the best practicable within the current state of the art. The hypothetical location of the plant is in southern California.

The water plant has an average performance ratio over its assumed thirty-year life of 12.8 lb of product/1000 Btu and has a blowdown brine

concentration ratio of 2.0. The plant consists of four trains. Each train is 692 ft long and is 90 ft wide on the high-temperature end of the plant and 105 ft wide at the low-temperature end.

The flash chamber design incorporates two flashing brine levels and a product water tray. The condenser tubing is .035-in. wall, 90/10 copper-nickel alloy in the heat recovery section and .049-in. wall, 90/10 copper nickel in the heat reject section with an assumed thirty-year life. The flashing brine flows through the evaporator stages in two levels. The condenser tube bundles are located at the top of the evaporator structure, and the product water condensate drains into the product tray immediately below the bundles. The product is flashed to downstream stages in the same fashion as the brine.

Each plant train is stepped between the heat recovery and the heat reject sections so that condenser tubes approximately 240 ft long can be inserted from either end of the heat recovery section. A single water box is used at the midplane of the heat recovery vessel.

The floor of the plant is concrete with a 1/4-in. steel liner. The roof and the side walls of the high-temperature end (above 200°F) are of 1/2-in.-steel arch construction. In the lower temperature portions, 9-in.-thick concrete with a 1/4-in. steel liner is used.

The deaerator is a compact two-stage spray chamber. A relatively small quantity of stripping steam is used for stripping air from the feed water. The deaerator is situated adjacent to the heat reject section, which provides the stripping steam. Sulfite is injected to react with any oxygen remaining in the deaerator effluent.

Separate brine heaters are provided for each train (two per train). The heater tubing is 90/10 copper-nickel alloy. This tubing is 24.2 ft long, and the brine velocity in the tubes is 4.5 fps.

The seawater intake system is the submarine line type.

Table 1 summarizes the principal parameters for the MSF plant. Table 2 gives the basic ground rules and assumptions for the design.

The conclusions from this study are that a 250-Mgd MSF distillation plant, under the ground rules, can be built at a cost of $149,725,000 or 59.9¢/daily gallon of capacity, and that annual operating costs with a 5.6 percent charge rate will amount to 20.6¢/1000 gallons.

TABLE 1

SUMMARY OF MSF PLANT PARAMETERS

Plant dimensions		
Evaporator, ft		692 L x 500 W x 24 H
Water plant plan area, ft		960 L x 500 W
Performance ratio, lbs product/1000 Btu		12.845
Brine temperature range, °F		250 - 92
Concentration ratio		2.0
Shell construction		Concrete and steel
Number of trains and product of each		4, 62.5 Mgd
Number of flashing brine levels		2
Power requirements, Mw		69.82
Number of stages of heat recovery		48
Number of stages of heat reject		2
Steam requirements, Btu/hr		6.71×10^9
Heat exchangers		
Evaporator	Recovery	Reject
Tube material	90/10 Cu-Ni	90/10 Cu-Ni
Brine velocity, fps	4.50	5.0
O.D. and wall thickness, in.	0.750 x 0.035	0.750 x 0.049
Estimated tube life, yrs	30	30
Overall U, Btu/hr-ft^2-°F	579	425
Total surface area for 250-Mgd, ft^2	23,370,000	1,352,000
Tube length	241 ft 6 in. & 238 ft 6 in.	67 ft 6 in.
Total number of tubes for 250-Mgd	247,960	101,960
Number of tube bundles/train	5	5
Bundle dimension		
O.D.	Stages 1-25: 10 ft 2 in. Stages 26-48: 11 ft 2 in.	8 ft 2 in. major axis 5 ft 8 in. minor axis
I.D.	Stages 1-48: 1 ft 10 in.	3 ft 3 in. major axis 0 ft 9 in. minor axis

TABLE 1 (CONTINUED)

Brine heater	
Tube material	90/10 Cu-Ni
Brine velocity, fps	4.5
O.D. and wall thickness, in.	0.750 x 0.035
Estimated life, yrs	30
Overall U, Btu/hr-ft^2-°F	659
Surface area, ft^2	1,187,000
Length	24 ft 1 3/4 in.
Number of tubes	250,400
Brine temperature, in-out, °F	238.76 - 250
Brine flow, lb/hr	624.54 x 10^6
Steam temperature, °F	254.2
Steam flow, Btu/hr	6.71 x 10^9
Deaerator design	
Number of spray stages	2
Water flow, lb/hr/ft^2	20,000
Steam required, lb/100 lb feed	0.0033
Makeup water flow/train, lb/hr	43.11 x 10^6
Brine tray design	
Maximum flow, lb/hr-ft of width	1,000,000
Number per train	2
Width, top tray, ft	27 ft 5 in. (high temperature) 32 ft 4 in. (low temperature)
Width, bottom tray, ft	36 (high temperature) 42 (low temperature)
Stage design	
Heat recovery stages	
Stage number, length, width	1 through 16, 9 ft x 36 ft 17 through 25, 10 ft 6 in. x 36 ft 26 through 48, 10 ft 6 in. x 42 ft
Heat reject	
Stage number, length, width	49, 33 ft 6 in. x 42 ft 50, 34 ft 0 in. x 42 ft
Pumps and drives (all pumps are vertical dry-pit-type centrifugal pumps.)	
Seawater intake	
Number of pumps	4
Flow per pump, gpm	148,000
Pump head, ft	57
Pump speed, rpm	327
Type of drive	Synchronous motor
Rated hp	2,750

TABLE 1 (CONTINUED)

Brine recycle	
Number of pumps	4
Flow per pump, gpm	302,000
Pump head, ft	189
Pump speed, rpm	225
Type of drive	Synchronous motor
Rated hp	18,000
Deaerator feed	
Number of pumps	4
Flow per pump, gpm	84,200
Pump head, ft	24
Pump speed, rpm	225
Type of drive	Synchronous motor
Rated hp	700
Product water	
Number of pumps	4
Flow per pump, gpm	43,400
Pump head, ft	107
Pump speed, rpm	514
Type of drive	Synchronous motor
Rated hp	1500
Blowdown	
Number of pumps	4
Flow per pump, gpm	41,300
Pump head, ft	40
Pump speed, rpm	450
Type of drive	Synchronous motor
Rated hp	600
Vent	
Number of pumps	4
Flow per pump, gpm	3200
Pump head, ft	45
Pump speed, rpm	1170
Type of drive	Induction motor
Rated hp	50

TABLE 2

GROUND RULES AND ASSUMPTIONS

1. The plant is to be located in southern California.

2. Costs for labor and material are to be expressed in terms of second-quarter 1968 dollars.

3. Capital charges are 5.6%.

4. The plant load factor is to be 90%.

5. The energy source for the plant is to be one 2500-Mwt light-water reactor. The evaporator designs, however, are to be useful with other nuclear or fossil energy sources.

6. The seawater temperature is to be taken as 65°F. A total dissolved solids content of 33,600 ppm is assumed.

7. The product water is to be delivered at 25 psig and 90°F at the plant battery limits. Total solids will be limited to 25 ppm.

8. Component designs developed by OSW and its contractors are to be used to the extent feasible.

9. Energy costs from the 2500-Mwt light-water reactor are:

Prime steam at 540°F and 965 psi	16.03¢/MBtu
Exhaust steam at 254.2°F, saturated	8.0¢/MBtu
Electric power	2.50 mills/kw-hr

10. Operating and maintenance costs are to be estimated based on a single operating staff for both power and water plants.

11. Operating control for the plant is to be based on a single control room for the evaporator and the reactor.

12. The plants are to be designed in a manner that will make possible adding other units to share the same facilities later.

13. Designs are to be based on current technology.

3. PLANT COSTS

3.1 Capital Cost

Capital cost estimates given in this report were developed by the Bechtel Corporation under subcontract to ORNL (See Part II). The capital cost of this first-of-a-kind 250-Mgd plant is based on 1968 southern California labor rates and second-quarter 1968 prices. The total direct capital costs, as estimated by the Bechtel Corporation, amount to $117,831,000. With the addition of the indirect costs, except escalation to the date of construction, the total cost is $149,725,000 or 59.9¢/daily gallon.

3.2 Operating Costs

The operating costs were estimated by ORNL. The average unit cost of water over the life of the 250-Mgd facility is 20.58¢/1000 gallons. This cost is based on a fixed charge rate of 5.6 percent and on 1968 dollar value. Labor rates for southern California were used with a 22.5 percent allowance for fringe benefits which are applied to the direct labor costs.

The annual and unit cost breakdown is shown in detail in Table 3. The heat cost is based on a steam requirement of 6.71×10^9 Btu/hr at 8.0¢/MBtu. The chemical cost is based on chlorine injection of 5 ppm two hours a day (seawater intake flow, 304.27×10^6 lb/hr; chlorine cost, $130/ton) and on a continuous sulfuric acid addition of 120 ppm (makeup water flow, 172.4×10^6 lb/hr; sulfuric acid cost, $17/ton). Antifoam (42¢/lb) is added at a rate of 0.5 ppm to the makeup flow, and sodium sulfite (2.125¢/lb) is added to the deaerated feed at a rate of 0.4 ppm to bring dissolved oxygen from a nominal 50 ppb to 0 ppb. The power cost to the water plant is 2.5 mills/Kwh based on a load of 70 Mw. The operating labor cost is based on the manpower requirements shown in Table 4, and the cost for maintenance and supplies is based on 0.6 percent of the direct capital cost.

4. PROCESS FLOW DESCRIPTION

The description of the process flow for the 250-Mgd water plant is presented in Figure 1. The water plant is coupled with a backpressure steam turbine operated from a power plant which is driven by one 2500-Mwt BWR reactor. As a result of this coupling the performance

TABLE 3

ANNUAL AND UNIT COST BREAKDOWN FOR 250-MGD MSF PLANT
OPERATING AT AN OVERALL PLANT LOAD FACTOR OF 90%

	$/Yr x 10^6	$/Kgal
Heat	4.2353	0.05157
Chemicals	1.7404	0.02119
Power	1.3762	0.01676
Operating cost	0.4592	0.00559
Maintenance and supplies	0.7070	0.00861
Capital		
Pumps and motors	0.7335	0.00893
Chemical systems	0.2508	0.00305
Site work	0.0365	0.00044
Sea intake	0.6063	0.00738
Evaporator shell	1.8716	0.02279
Evaporator area	3.7741	0.04596
Brine heater	0.4301	0.00524
Valves and piping	0.3151	0.00384
Electrical equipment	0.0976	0.00119
Cranes	0.0059	0.00007
Instruments	0.1392	0.00169
Buildings	0.0176	0.00021
Deaerator	0.1066	0.00130
Total	16.9030	0.20581

TABLE 4

ANNUAL OPERATING AND MAINTENANCE LABOR COST ESTIMATE FOR 250-MGD MSF PLANT

	Annual Rate $	Personnel Required	Fraction Chargeable to		Annual Cost in $ for	
			Water Plant	Power Plant	Water Plant	Power Plant
Plant Management						
Station Supervisor	19,500	1	1/2	1/2	9,750	9,750
Chief Engineer	15,700	1	1/2	1/2	7,850	7,850
Secretary-Typist	5,700	1	1/2	1/2	2,800	2,800
Clerk	6,500	1	1/2	1/2	3,250	3,250
Guard	6,200	5	1/2	1/2	15,500	15,500
Subtotal		9	4 1/2	4 1/2	39,150	39,150
Technical Staff						
Nuclear Engineer	15,100	1		all		15,100
Water Plant Engineer	15,100	1	all		15,100	
Health Physics Supervisor	14,000	1		all		14,000
Chemist	14,000	1	1/2	1/2	7,000	7,000
Laboratory Technician	8,400	2	1/2	1/2	8,400	8,400
Clerk	6,500	1	1/2	1/2	3,250	3,250
Subtotal		7	3	4	33,750	47,750

TABLE 4 (CONTINUED)

	Annual Rate $	Personnel Required	Fraction Chargeable to Water Plant	Fraction Chargeable to Power Plant	Annual Cost in $ for Water Plant	Annual Cost in $ for Power Plant
Operating Staff						
Shift Supervisor	11,400	5	1/2	1/2	28,500	28,500
Water Plant Operator	9,000	9	all		81,000	
Power Plant Operator	9,000	9		all		81,000
Auxiliary Operator	8,800	5	1/2	1/2	22,000	22,000
Instrument and Monitoring Technician	8,500	9	1/2	1/2	38,250	38,250
Subtotal		37	18 1/2	18 1/2	169,750	169,750
Maintenance Staff						
Maintenance Supervisor	15,100	2	1/2	1/2	15,100	15,100
Mechanic-Machinist	8,800	6	1/2	1/2	26,400	26,400
Pipefitter-Welder	8,800	6	1/2	1/2	26,400	26,400
Electrical Mechanic	9,000	4	1/2	1/2	18,000	18,000
Instrument Mechanic	9,000	4	1/2	1/2	18,000	18,000
Helper	7,500	3	1/2	1/2	11,250	11,250
Storekeeper	6,500	2	1/2	1/2	6,500	6,500
Laborer	5,000	2	1/2	1/2	5,000	5,000
Janitor	5,600	2	1/2	1/2	5,600	5,600
Subtotal		31	15 1/2	15 1/2	132,250	132,250
Total Direct Labor		84	41 1/2	42 1/2	$374,900	$388,900
Fringe Benefits - 22.5%					84,350	87,500
Total Annual Labor Cost					$459,250	$476,400
					$935,650	

DWG. NO. G-68-699

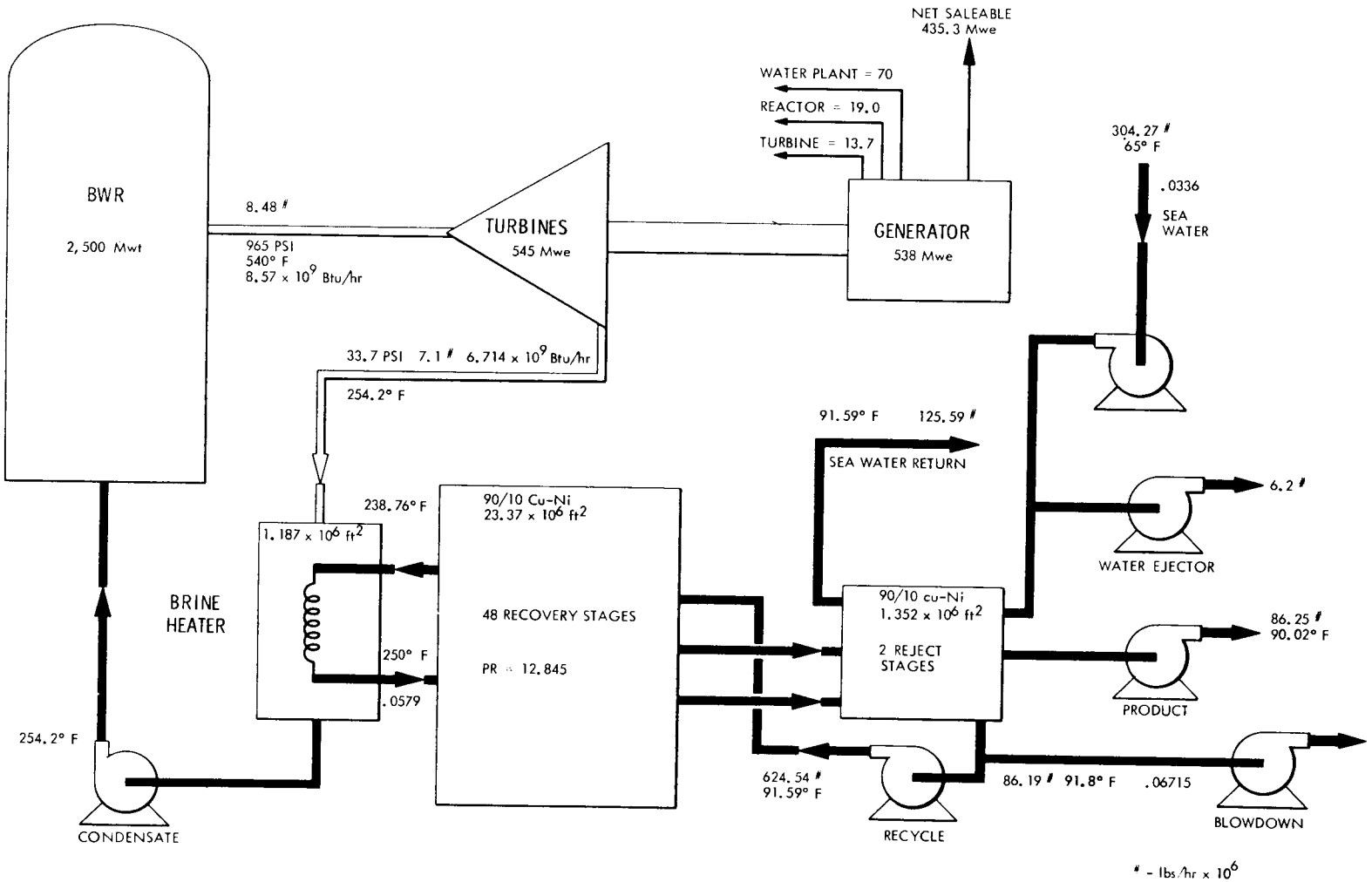

Figure 1

BASIC FLOW DIAGRAM
250-MGD MSF DISTILLATION PLANT

ratio of the water plant is 12.845. The generator produces 538 Mw of power, of which 435.3 Mw is saleable and 70 Mw is supplied to the water plant auxiliaries.

The incoming seawater is first screened to remove ocean debris and chlorinated to control algae. It is then pumped into the condenser tubes of a two-stage heat reject section. In the reject evaporator, the seawater receives a quantity of heat nearly equal to the plant steam input rate. Of this total flow, about 40% is rejected to the sea. The remaining seawater is used for process feed and is therefore acidified and pumped to the deaerator.

The deaerator is relatively new in concept and is constructed as an integral part of the heat reject section. It consists of two stages of brine spray with a countercurrent flow of water vapor, the latter being obtained from the final brine flash chamber. Some deaeration is accomplished by flashing in the first set of spray nozzles. However, the major transfer of inerts from brine to vapor is expected to occur in the two spray stages provided. The main condensation of the stripping vapor is done by direct contact with treated, cold seawater. The inerts and water vapor are withdrawn at a temperature of 80°F and evacuated to the atmosphere by a three-stage ejector system.

The acidified, deaerated seawater and the processed brine from the last stage of the evaporation process are combined at an average temperature of 91.59°F and pumped through 480 ft of evaporator tubes in the heat recovery section at a velocity of 4.5 ft/sec. Water vapor from flashing brine condenses on the tubes and heats the seawater inside the tubes to 238.76°F as the seawater passes through the 48 evaporator heat recovery stages. From the condenser tubes, the seawater enters a brine heater and is further heated to 250°F with saturated exhaust steam at 254.2°F from a backpressure turbine. The hot brine then flows back through all the evaporator stages, this time passing through the weirs and along the brine trays designed to promote flashing of the water vapor in each of the 50 stages and terminating in the heat reject section, adjacent to the deaerator.

The design depth of this flashing brine is 15 in., and the mass velocity is tapered from 1,000,000 lb/hr/ft of tray width at the high-temperature end of the plant to 800,000 at the end of the heat recovery section. The submergence allowance (deviation of brine temperature from equilibrium) on each stage is a function of brine depth, stage length, temperature decrement, brine flow, and chamber geometry or shape. An estimate of this effect is based upon AMF flash chamber test data. Interstage vapor pressure differentials provide the driving force to maintain the brine flow from stage to stage. Additional static head is provided by stage elevation changes at the bottom of the plant, where the stage-to-stage vapor pressure differential alone is not sufficient to maintain the brine flow. In the heat reject section, the temperature decrement per stage is increased from 3.05°F to 5.82°F to promote brine flow.

The vapor from the flashing brine in each stage is passed through demisters, condensed on tube bundles, and collected in trays located beneath the tubes. This product is flashed from stage to stage in the same manner as described previously for the brine, treated with calcite, and stored in a reservoir.

The air and the dissolved gas removed from the seawater in the deaerator are withdrawn from the plant by a central system of ejectors. Traces of noncondensables resulting from inleakage and incomplete deaeration are carried by water vapor to the condenser bundles. A gas cooling and gas removal section in the condenser bundle serves to remove the noncondensables which collect at each stage. The stages above atmospheric pressure are vented separately; the subatmospheric stages are served by the central ejector system. The total heat losses sustained by these venting operations are about 1% of the brine heater heat duty.

Table 5 is a list of the significant stage parameters that resulted in the condenser surface area and flash chamber length. Values are listed for the top and bottom heat recovery and reject stages, as well as the average value for the heat recovery section.

TABLE 5

STAGE PARAMETERS

Stage Position	Heat Recovery		Heat Reject	
	Top	Bottom	Top	Bottom
Temperature, °F				
a. Flashing brine in	250.00	106.51	103.45	97.63
b. Flashing brine out	246.95	103.45	97.63	91.80
c. Vapor	244.26	98.91	95.14	88.50
d. Tube-side brine in	235.70	91.59	78.42	65.00
e. Tube-side brine out	238.76	94.66	91.59	78.42
Submergence ΔT, °F	0.7794	2.441	0.4368	1.047
Pressure drop ΔT, °F	0.0406	0.799	0.7632	0.993
Chemical BPE, °F	1.863	1.305	1.289	1.263
Total losses, °F	2.683	4.545	2.489	3.303
Condenser area, $ft^2 \times 10^6$	0.398	0.646	0.869	0.546
$\overline{U}$	663.51	487.47	437.15	403.89
LMTD	6.92	5.65	8.50	15.85
Temperature decrement	3.055	3.055	5.82	5.83
Fouling factor	0.0005	0.0005	0.0007	0.0007
Stage length, ft	8.17	13.27	33.5	34.0

5. PLANT SYSTEMS AND COMPONENTS

5.1 Chemical Systems

All incoming seawater is chlorinated to control marine growth; sulfuric acid is added to prevent formation of alkaline scales; sodium sulfite is added to eliminate residual oxygen; and a Hagan C-1 treatment is used to prevent foaming of the flashing brine. It is planned to use a calcite filter bed for passivation of the product water. Further product water treatment will be required when the water is pumped from the reservoir into the distribution mains.

A cost comparison of using an on-site acid plant versus buying acid commercially indicated that a considerable saving can be realized with an on-site acid plant. Acid from this facility would cost $17/ton, based on suflur at $40/ton, compared with $35.80/ton for purchased acid.

Chlorination. Marine growth in the intake system is to be controlled by the use of chlorination. Design rates of chlorine addition, based on demonstration plant experience, are set at a maximum of 20 ppm for two hours a day. However, West Coast power station experience indicates that normal requirements might be reduced to 5 or 6 ppm for two hours a day to maintain a residual concentration of 0.5 ppm during the injection period.

Chlorine is added to the seawater at the intake pump suction. Liquid chlorine is transferred from a tank car to vaporizers by its vapor pressure. Steam is used to produce vapor with 15 to 20°F of superheat to prevent condensation in the line. Water jet exhausters mix the vapor with a side stream of seawater from the main intake pumps. The dilute mixture is then pumped to the intake opening. Premixing assists in delivering a uniform treatment condition. Dual vaporizer and exhaust systems are provided to increase the operational flexibility. Chlorine addition is regulated by a control valve in the seawater line to the jet exhauster set to maintain a desired pressure in the chlorine line to the jet exhauster. The mixture is then delivered to the pump suction.

The annual cost of chlorination is $65,000 based on $130/ton of liquid chlorine.

Scale Control. The single-effect plants can operate at a maximum temperature of 250°F. The maximum concentration of brine at the reject of the plant is 67,000 ppm total dissolved solids, that is, twice the normal seawater concentration. At the 250°F level, the brine concentration is 57,900 ppm. Calcium sulfate scale will not form under these conditions; consequently, chemical treatment is needed only to prevent the alkaline scale that results from calcium carbonate and magnesium hydroxide.

The basis for scale control in the condensers and in the brine heaters is acid treatment such as in the Point Loma plant. Sulfuric acid produced on the site is stored at 93% concentration in a 400,000-gallon storage tank. A 250 ton/day sulfuric acid plant is to be erected as a turnkey job. The plant utilizes molten sulfur which is oxidized to SO_3 gas and absorbed in dilute sulfuric acid. The sulfur is delivered by rail. Treatment is based on the addition of 120 ppm of sulfuric acid, with provisions for a maximum addition of 130 ppm (Point Loma experience). In operation, concentrated sulfuric acid flows by gravity from the storage tank to the plant trains where it is pumped into the proper pipe lines. Since treating is absolutely necessary to prevent scaling during the evaporation process, dual pump systems are provided. Adequate mixing is assured by the inclusion of six injection nozzles in the pipe lines. An appreciable saving in acid cost is realized by using an on-site, or captive, acid plant. Acid cost from such a facility would be $17/ton, including amortization, as contrasted with the current price of $35.80/ton[1] of commercial acid (excluding delivery cost). These costs are based on a price of $40/ton for sulfur delivered to the plant. The annual cost of acid is $1,388,000.

Antifoam. Antifoam requirements follow Point Loma experience, where 0.5 ppm of Hagan C-1 added to the makeup water was adequate. The chemical, available in drums, is usually injected as a 1% solution, but pumping is difficult. To facilitate pumping and storage necessitates that the antifoaming agent be transferred from drums to a storage tank, where it is diluted to yield a 10% solution. From the storage tank, it is pumped into the sump directly for the recycle pumps of each train. The mixing action of the pump obviates the need of injection nozzles at this point. The antifoaming agent cost is 42¢/lb or $276,000/yr.

Sulfite. The deaerator system will bring the residual CO_2 level down to 5 ppm and the residual O_2 down to 50 ppb. Since a lower level of O_2 is desired, probably down to 0 ppb, a supplemental chemical scavenging system to feed sodium sulfite to the deaerated makeup feed stream has been included in the design.

Sodium sulfite in powder form is blended with deaerated brine in a batch-mixing tank to form an aqueous solution. This solution is pumped to the sodium sulfite storage tank for continuous feed to the four evaporator trains. A total of 68 lb/hr of sodium sulfite is required for the deaerated makeup feed stream of 172.44×10^6 lb/hr, or 0.4 ppm. The sodium sulfite cost is $42.50/ton in bulk form or $11,400/yr.

5.2 Pumps and Drives

Three leading pump manufacturers were contacted for information and assistance in the selection of the pumps applicable to this design. All three manufacturers recommended the vertical dry-pit type of pump for the range of flows and heads required.

Single-suction vertical pumps will yield the best efficiency in ranges of interest. This type also is able to run for long periods of continuous duty without requiring excessive maintenance. The dry-pit type of installation allows free access to the pump and motor and provides ease in maintenance and inspection of the bearings, the impeller, and the packing. These pumps are simple to dismantle for major maintenance.

Studies indicated that the brine recycle pump, the seawater pump, the blowdown pump, and the deaerator pump should be constructed with type 316 stainless-steel-clad cases, with CF3M stainless-steel impellers, and with type 316 stainless-steel shafts. The product water pump should be constructed with Ni-Resist case and type 316 stainless-steel impeller and shaft. The use of Ni-Resist cases and type 316 stainless-steel impellers and shafts was considered for the seawater intake and brine recycle pumps; however, the Ni-Resist material was rejected for two reasons: (1) there is some question as to whether Ni-Resist can be fabricated and welded in such large casings; and (2) on the basis of experience in coastal power stations, stainless-steel pumps should provide a longer pump life.

The suction to all pumps with the exception of the seawater pump is from the low-pressure end of the evaporator, where the pressure is approximately 0.5 psia. For this reason, it was necessary to investigate the net positive suction head requirements to avoid possible cavitation. The most reliable and economical solution was found to be submergence of the impeller eye approximately 40 feet below the sump water level. This gives an approximate atmospheric pressure at the impeller eye and permits the use of a higher speed pump that is smaller and lower in cost than a lower speed pump operating at a lower net positive suction head. The deaerator pump, because of its low head requirements, was set approximately 30 feet below the sump level and will require a lower speed.

Evaluations led to the conclusion that large pumping units are significantly cheaper than multiple small units and have a higher efficiency.

All pumps have suction lines which enter at the top of the pump with resulting low head loss and uniform flow profile to the eye of the impeller. The seawater pump piping is designed to recover approximately 20 feet of head from the vacuum pressure in the deaerator. The pump is capable of developing this additional head during start-up. Trapped air is removed from the top of the water boxes through a ball-float air-relief valve to the building exhaust system.

The recycle pumps are set in a dry well to recycle brine through the heat recovery section. A retention pit is used to feed water to the recycle pumps through inclined suction pipes. The water level during normal operation is maintained 40 feet above the center line of the pump to satisfy suction conditions. The retention pit has sufficient capacity for about 30 seconds of operation above and below the normal operating level. This will facilitate an adjustment of the makeup water from the deaerator, as well as will allow flexibility in pumping during start-up and operation.

The product water pump is installed in a dry well adjacent to the product water pit of each module. The impeller eye is set 40 feet below the building floor in order to satisfy the required suction conditions. The pump is capable of delivering the product water to a point 1000 feet

from the evaporator building with a residual pressure of 25 psig at an elevation of 35 feet above mean sea level.

In compliance with the ground rules, the drives for all pumping units are electrical. Both pumps and motors are designed for outside installation with special hardware and coatings to protect them from the seawater environment. Motors 1000 hp or larger are water-to-air cooled.

5.3 Tubing

The tubing for the evaporator condenser bundles will be 90/10 copper-nickel alloy, 3/4-in. O.D. with .035-in. wall thickness in the heat recovery section and 0.049-in. wall thickness in the heat reject section. Continuous straight lengths of 238 ft 6 in. and 241 ft 6 in. will be utilized in the heat recovery section and 67.6-ft lengths will be used in the heat reject section.

5.4 Materials Selection

The materials selected for this facility were deemed to be the most economical for the service required. The attached Table 6 is a summary of the materials used.

6. DESIGN DATA

6.1 Structural Design

The evaporator structure is designed of structural steel for that portion of the plant operating above 200°F and of reinforced cast-in-place concrete for the low-temperature end. The concrete shell is lined with a thin steel sheet to prevent air leakage. Welded to this steel liner are small channels which bond the liner to the concrete and serve as part of the structural reinforcement of the shell. This liner also acts as a form for pouring wall sections and, in theory, lowers the amount of shoring required in construction.

The stage walls in the heat recovery portion of the evaporator are on 9-ft centers in the above 200°F section of the plant and on 10-ft 6-in. centers in the below 200°F section of the plant. Transverse column lines are located at this same spacing for the entire length

TABLE 6

MATERIALS OF CONSTRUCTION FOR 250-MGD MULTISTAGE FLASH EVAPORATOR PLANT

Component	Material
Intake system	
Submerged pipe	
Intake structure	Reinforced concrete
Bar grating and exposed metal	Phenolic-coated steel
Pipe	Concrete; bell-type joints with rubber rings for flexibility and sealing
Traveling bar screens and traveling screens	
Structure	Type 316 stainless steel
Screens	Type 316 stainless steel
Guide rollers	Type 316 stainless steel
Seawater intake	
Pumps	
Shaft	Type 316 stainless steel
Impeller	CF-3M stainless steel
Casing	316 stainless steel clad
Piping	Carbon steel, Portland cement lined
Valves	
Body	Ductile Ni-Resist, type D-2
Vanes	Ductile Ni-Resist, type D-2
Seat	"Nordel"
Shaft	Type 316 stainless steel
Deaerator	
Shell	Concrete with "Lumnite" cement coated steel liner
Piping	Steel, "Lumnite" cement lined
Spray nozzles	Saran
Pump	
Shaft	Type 316 stainless steel
Impeller	CF-3M stainless steel
Casing	316 stainless steel clad

TABLE 6 (CONTINUED)

Component	Material
Recycle brine system	
Piping	
For service below 250°F	Steel
Valves	
Body	Ductile Ni-Resist, type D-2
Vane	Ductile Ni-Resist, type D-2
Seat	"Nordel"
Shaft	Type 316 stainless steel
Pump	
Shaft	Type 316 stainless steel
Impeller	CF-3M stainless steel
Casing	316 stainless steel clad
Brine heater	
Tubes	0.035-in. wall, 90/10 copper-nickel
Tube sheet	90/10, 1/16-in. copper-nickel-clad steel
Shell	Steel
Piping to and from	Steel
Water boxes	Steel coated with phenolic
Blowdown piping	
Sump	Concrete with 1/4-in.-thick steel liner
Pumps	
Shaft	Type 316 stainless steel
Impeller	CF-3M stainless steel
Casing	316 stainless steel clad
Piping	Portland cement-coated steel
Valves	
Body	Ductile Ni-Resist, type D-2
Vane	Ductile Ni-Resist, type D-2
Seat	"Nordel"
Shaft	Type 316 stainless steel

TABLE 6 (CONTINUED)

Component	Material
Evaporator	
Shell	
High-temperature end	Structural steel box sections and arched plate
Low-temperature end	Concrete with 1/4-in. steel interior lining
Partitions	Steel and concrete lined with polypropylene
Brine trays	
Below 200°F	Polypropylene-lined concrete to 3 in. below water level
Above 200°F	Phenolic-coated steel
Product trays	
Below 200°F	Polypropylene-lined concrete
Above 200°F	Phenolic-coated steel
Weirs	Phenolic-coated steel
Tubes	0.035-in. wall, 90/10 Cu-Ni (heat rec.) 0.049-in. wall, 90/10 Cu-Ni (heat rej.)
End tube sheets	90/10, 1/16-in., copper-nickel-clad steel
Intermediate supporting tube sheets	Steel
Expansion joints in walls	Monel
Internal piping	Steel
Demisters	Type 316 stainless steel
Water boxes	Steel coated with phenolic
Chlorination system	
Dry liquid-Cl_2 lines	Monel
Vaporizer	
Shell	Monel
Tubes	Monel
Tube sheet	Monel

TABLE 6 (CONTINUED)

Component	Material
Chlorination system (cont.)	
Valves	Monel
Cl_2 vapor lines	Monel
Liquid Cl_2 pumps	Monel
Ejectors (mixing)	Titanium
Water and Cl_2 lines	Titanium
Acid treatment system - H_2SO_4	
Equipment and piping exposed to 98% acid	Steel
Acid pumps	Steel
Equipment and piping exposed to warm diluted acid	Hastelloy C
Eductor mixer	Hastelloy C
Caustic system	
Pumps	Steel
Piping	Steel
Tanks	Steel
Noncondensable removal system	
Ejectors	Hastelloy C
Barometric condensers	Type 316 stainless steel
Connecting piping	Steel, with 1/2-in. "Lumnite" cement lining
Product water system	
Piping	Epoxy-coated steel

TABLE 6 (CONTINUED)

Component	Material
Product water system (cont.)	
Valves	
Body	Ductile Ni-Resist, type D-2
Vane	Ductile Ni-Resist, type D-2
Shaft	Type 316 stainless steel
Seat	"Nordel"
Sump	Concrete with epoxy-coated, 1/4-in. steel liner
Pump	
Shaft	Type 316 stainless steel
Impeller	Type 316 stainless steel
Casing	Ductile Ni-Resist, type D-2

of the plant. Stage wall columns are on approximately 9-ft spacing in the 36-ft module width of the plant and 10-ft 6-in. spacing in the 42-ft module width.

The structural steel exterior in the high-temperature areas consists of arched-steel sheet to reduce the metal shell thickness. Structural steel tubing is used for beams and columns, as only the outer surface of tubing is exposed to corrosive conditions and requires corrosion allowance. Stage walls are of flat plate supported from the beams and columns.

The combined structure footing and floor is a thick concrete slab covered with a steel liner for the entire area of the evaporator. Exterior insulation is required to lower the heat transfer rate for both the steel roof and the outside steel walls. No insulation is necessary for the concrete evaporator shell.

A 1/8-in. corrosion allowance is provided for all steel surfaces subject to interior corrosive conditions. In addition, for the steel portion of the structure, the interiors of the brine trays are coated with epoxy-phenolic and the water boxes are protected with epoxy flake-glass. Concrete, where in contact with liquid brine alone, requires no lining; but other concrete surfaces which are exposed to product water and vapor are provided with a 1/8-in. polypropylene liner.

Transverse expansion joints (six) are located adjacent to stage walls and are spaced as dictated by temperature and construction materials. One longitudinal expansion joint is placed adjacent to the longitudinal dividing wall between trains and runs the entire length of the plant. The deaerator and pump pits are also separated from the rest of the plant by an expansion joint.

6.2 Flash Chamber Design

The design of flash chambers for this study was based in part on development work done under contract to the Office of Saline Water by the Cuno Engineering Corporation, a subsidiary of the American Machine & Foundry Company, and in part by the experience with commercial flash plants. In the AMF work, factors which affect brine nonequilibrium in a multistage flash evaporator were experimentally determined and evaluated

at brine flow rates as high as 1,000,000 lb/hr/ft of flash chamber width. Achievement of this high flow rate required the use of submerged rectangular orifices between stages. These tests showed that the nonequilibrium allowance, Δ', could be represented, within the range of interest, by the equation

$$\Delta' = 12.3\, e^{-0.0356t} e^{0.07L} e^{0.476W} \tag{1}$$

where

Δ' = brine nonequilibrium allowance, °F, for a 14-ft stage

t = stage temperature, °F

L = static liquid level, in.

W = liquid throughput rate divided by 10^6, lb/hr/ft width.

Also, it was established that the interstage flow could be represented by the equation

$$W/A = 400{,}000 \left(\frac{\Delta P_T}{1.25} \right)^{0.455}$$

where

W = interstage flow rate, lb/hr/ft stage width

A = interstage orifice area, ft^2

ΔP_T = $\dfrac{\Delta P_v + \Delta h}{1-(A/A_1)^2}$, in. H_2O

ΔP_v = interstage vapor pressure difference, in. H_2O

Δh = interstage static liquid level difference, in. H_2O

$1-(A/A_1)^2$ = velocity of approach factor.

This equation was modified to give the following design equation:

$$SUB_{10} = (0.4253) \left(\frac{2.5}{0.4253} \right)^{\frac{246-t}{146}} (1.522)^{\frac{L-12}{6}} \left(\frac{0.5}{0.4253} \right)^{\frac{W-0.66}{0.34}} \tag{2}$$

where

SUB = brine nonequilibrium allowance, °F, for a 10-ft stage.

The form of equations (1) and (2) is the same except that the base of each exponential term has been changed in (2) to simplify computations, and some of the constants have been revised to reflect current design practice. It may be seen from equation (2) that, when t = 100, L = 12, and W = 0.66, the submergence, SUB_{10}, is 2.5°F. For t = 246, L = 12, and W = 1, it may be seen that SUB_{10} = 0.5°F. To determine the nonequilibrium losses for a stage other than 10 ft, we first assumed that 50 percent of the stage temperature decrement occurred at the interstage orifice. We then assumed an exponential decay curve from the orifice outlet to the end point of the 10-ft stage as would be calculated from equation (2), that is,

$$SUB = \left(\frac{SUB_{10}}{\rho/2 + SUB_{10}} \right)^{\frac{SL}{10}} (\rho/2 + SUB_{10}) \qquad (3)$$

where

SUB = nonequilibration allowance, °F, for stage of length = SL ft

ρ = stage temperature decrement, °F.

The procedure used to arrive at modified equation (2) was to calculate the process parameters for several commercial plants using the ORSEF computer code[2] and varying the constants in the temperature term of equation (2). The resulting constants given here are those which gave the best agreement between calculated and observed process performance.

At the low-temperature end of a flash distillation plant, the available driving force between stages diminishes very rapidly. To provide sufficient head to drive the brine through the interstage orifices, it became necessary to increase the head differential by changing the stage elevations. Table 7 is a list of the minimum change in stage elevation required for the flashing brine mass flow rate of 800,000 lb/hr-ft width in the stages listed. Although the elevation changes are quite small, they are necessary.

TABLE 7

PLANT STEPPING REQUIRED FOR 9-IN.-HIGH ORIFICE OPENING

Stage Number	Stage-to-Stage Decrease in Elevation, inches
1 through 34	Reference Level
35	.84
36	1.32
37	1.56
38	2.16
39	2.52
40	3.00
41	3.36
42	3.72
43	3.96
44	4.32
45	4.68
46	4.92
47	5.16
48	5.40
49	4.08
50	3.84
Total Accumulated Change from Reference Level	54.84

6.3 Deaerator Design

The deaerator design concept for this plant incorporates a very compact two-stage spray chamber. This design fits well into the plant flow sheet, and only a small amount of stripping steam is required for scrubbing the deaerator feed water.

The deaerator uses two spray chambers in series. The deaerator feed is sprayed from a group of nozzles into the first spray chamber. The water is then collected and pumped through a group of nozzles into the second spray chamber. Stripping steam from the last heat reject stage is used to scrub the feed water in the second spray chamber, and this steam is also used as a stripping medium for the feed water in the first stage. Finally, the stripping steam from the first-stage spray chamber is condensed in a direct-contact condenser. Seawater at 65°F is used for condensing the steam in this section of the deaerator, and this water forms part of the deaerated water.

Tests of the Freeport deaerator[3] indicated that a full-cone spray nozzle is capable of effective separation of gas from seawater. Additional tests of a small two-stage spray deaerator at ORNL indicated that deaeration to 50 ppb of oxygen could readily be achieved. A sodium sulfite addition system was added to complete the elimination of oxygen down to the desired level of 0-10 ppb.

It is expected that CO_2 concentration in the feed will be below 5 ppm.

Materials chosen for the deaerator should achieve long service life.

The feed water is introduced into a water box for each stage, and saran spray nozzles are used beneath each water box for spraying the water. No internal piping is used inside the deaerator. The deaerator is made of concrete with an inside steel liner which is coated with "Lumnite" cement.

The arrangement of the deaerator is shown in Figure 2.

DWG. NO. G-68-700

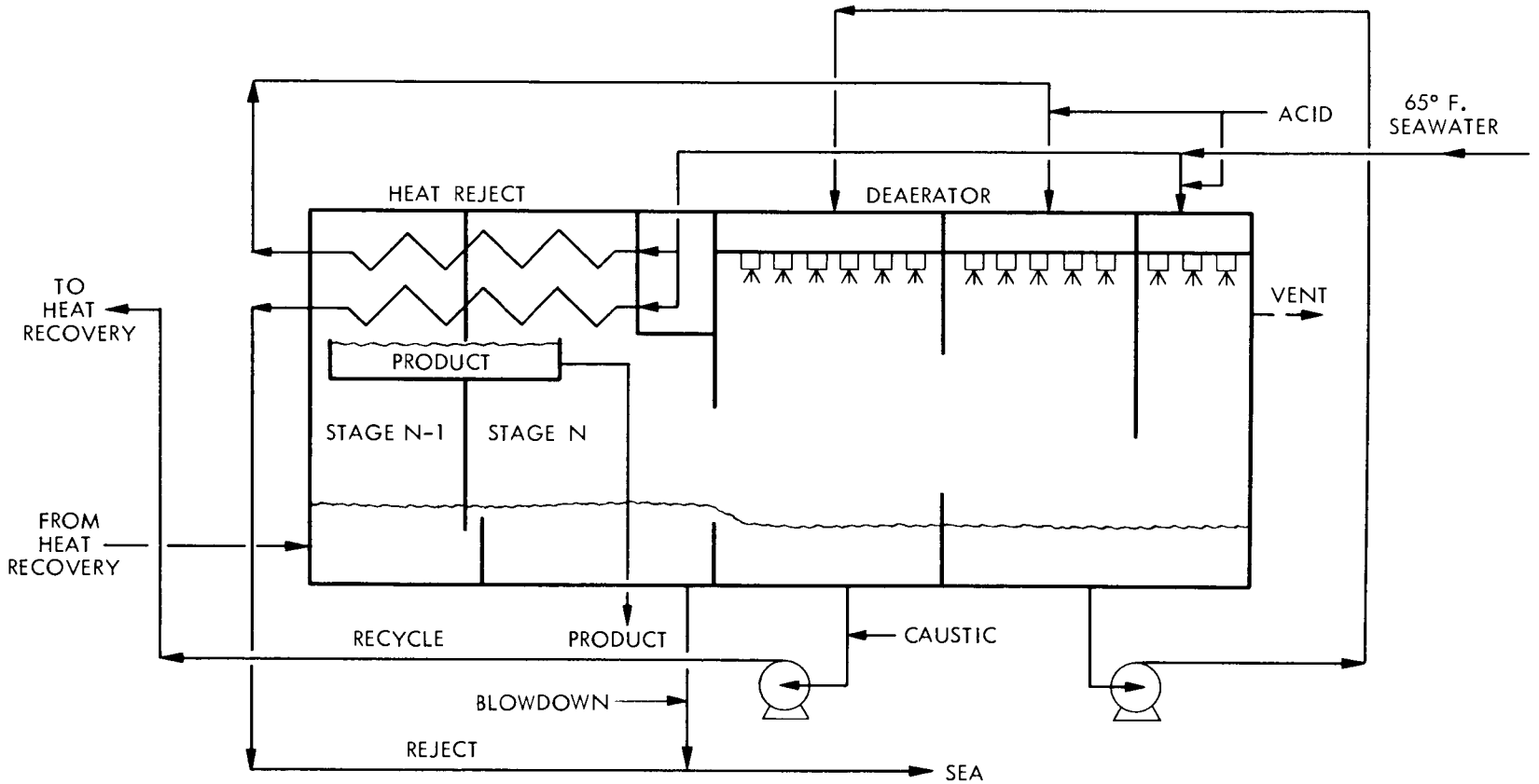

Figure 2
DEAERATOR FLOW DIAGRAM

6.4 Electrical Design

Primary power is supplied to the evaporator plant from the auxiliary bus in the main switchyard. A radial feed system is used with a single feeder supplying one train. One 25-mva transformer and a substation are provided for each train.

Motors 600 hp and larger are synchronous type, unity power factor with brushless exciters. The 18,000 hp brine recycle pump motor is supplied with 13,800 volts; the other motors are supplied with 4160 volts. Motors smaller than 600 hp are induction type and are supplied with 480 volts. Power of 208/120 volts is provided for small power, lighting, and control. Motors which are 1000 hp and larger are weatherproof, water-to-air cooled. Smaller motors are epoxy encapsulated weatherproof or totally enclosed, fan cooled.

Transformers and substations are outdoor type with protection for seawater atmosphere.

Underground feeders are provided. Although the initial cost of overhead distribution is less than that for underground, the underground is relatively unaffected by weather, provides greater reliability, and is less susceptible to atmospheric contamination. Underground ducts also facilitate evaporator maintenance since there are no overhead lines on or around the evaporator plant.

Duct banks of polyvinyl chloride conduits embedded in concrete are provided for the underground cables. Polyethylene insulation is used for 4160 and higher voltage, and THW insulation is used for other power cables.

All motors for the evaporator plant are remotely controlled from the control room. Underground ducts carry the control, communication, and instrument cables to the control room. Adequate alarms, metering, and indication are provided in the control room for remote operation.

Mercury vapor lighting fixtures mounted on steel poles provide lighting for streets and outdoor operating areas. A manual fire alarm system is integrated into the total plant fire alarm. The telephone system is of a commercial type.

A copper ground mat is provided which will be tied into the switchyard and power plant grid. All exposed metal will be grounded to this ground system.

The total estimated load for the plant is 70 mw. The estimated load for each train is 17.25 mw and 1 mw for the sulfuric acid plant, chlorination system, and other auxiliary load.

6.5 Instrumentation and Control

Plant operations are controlled and monitored from an area instrumentation and control room which is equipped with the controlling, recording, indicating, and alarm instrumentation essential for operation of the plant. A digital data collection system is provided for recording individual stage temperatures and pressures.

Closed loop control systems which facilitate plant operation from the central control room are used for controlling process operating variables. Conventional analog-type instruments are used for indicating and recording all process control variables. Although computer control of such plants is feasible, such control schemes were not considered for this plant.

Electronic instruments were selected in preference to pneumatic devices because of lower installation costs, rapid response, compatibility with analytical devices, adaptability to possible future use with data-collection and computer control systems. The major disadvantage is the higher initial cost, estimated to be 50 to 80% higher than pneumatic installations.

A description of the instrumentation systems follows. Included in the controlled variables in each train is the level in each pump sump. This function is performed by a valve in recycle lines around each pump. The deaerator level is controlled with a valve in the deaerator feed pump discharge line. The brine level in the first stage is maintained with a control valve at the outlet of the brine heater and inlet orifices to the two brine trays. This valve also serves the function of maintaining an adequate pressure on the tube side of the brine heater for the prevention of boiling inside the tubes.

Chlorine addition to the seawater intake system is controlled by the chlorine pressure at the suction of a water-powered ejector, which is maintained by regulating the water flow to the ejector. Chlorine flow is thus determined by the ejector suction pressure and by the ejector water supply pressure. This same type of control is used for the acid addition system. Antifoam solution is added to the recycle stream in proportion to the makeup water flow. Sulfite solution is added to the feed at a rate governed by oxygen analysis instrumentation.

Plastic insert-type flow tubes with differential pressure transmitters are used to meter flows in the large pipes. This appears to be the most economical method based on current technology. Magnetic flow meters, although ideal with respect to pressure drop and accuracy, are too expensive to warrant serious consideration. Small flows, such as those in the chemical addition systems, can be metered effectively with orifice plates and differential pressure transmitters.

Sheath-type copper-constantan thermocouples with ungrounded hot junctions are used for all temperature measurements. Spare thermocouples are recommended at all locations important to the operation and control of the plant. Pressure transmitters slaved to the control room for remote indication and/or control are used for all measurements of differential or absolute pressures. Capacitance-type probes, properly instrumented, produce continuous level indications for the brine trays. Differential pressure transmitters of the electronic-volumetric type measure the liquid levels in the pump sumps and in the first stage brine trays. This type of transmitter uses a filled capillary system in each leg so that only a sealed diaphragm is exposed to the process.

Salt concentration in the recycle and blowdown lines is monitored by highly accurate short span specific gravity transmitters. Salinity of product water is measured by electrical conductivity cells.

6.6 Valves and Piping

Hydraulically operated butterfly valves were selected for this plant because they cost less, weigh less, require less space and support, have fewer working parts, require less maintenance, and can be used for on-off or throttling service. Although butterfly valves have slightly more head

loss than gate valves in the open position, this is more than offset by the lower initial cost. When a valve is completely closed, the edge of the disc compresses a rubber-type seat to produce a tight closure, continued operating force is not required to maintain the disc in the closed position. The valve disc is contoured for low head loss and is internally reinforced to withstand both static and dynamic forces. These valves also lend themselves well to flow and level control, inasmuch as the coefficient of flow changes uniformly with the degree of opening.

For all brine service, valve seats will be "Nordel Rubber." This material possesses a good combination of wear properties, resilience, and resistance to brine and seawater. The valves used in this design range from 24 in. to 114 in. Heads range from vacuum to 200 ft. They have Ni-Resist, type D-2 bodies and vanes, and type 316 stainless-steel shafts.

Trunnion-mounted hydraulic-cylinder operators power the valves. These operators provide for remote, local, automatic, or manual control systems and for open-close, pressure, and flow control service.

6.7 Tube Bundle Design

Each of the four 62.5-Mgd trains has five tube bundles in the heat recovery section and five tube bundles in the heat reject section located above the product water trays. The continuous long-tube concept is used, with the heat recovery bundle being in two lengths. The first length is 238 ft 6 in. long extending from stage 1 through stage 25. The second length is 241 ft 6 in. long extending from stage 26 through stage 48. The heat reject tube bundles are 67.5 ft long.

Tube sheets at the water boxes are 3-in.-thick steel, Cu-Ni clad on the brine side. Tube sheets at the interstage walls are 1-in.-thick steel. Intermediate tube supports are 1/2-in.-thick steel.

As originally conceived, the tube bundles were rectangular in shape with a baffle on the top of the bundle which caused the steam to flow into the bundle from each side. During an early review the OSW expressed a desire for a different tube bundle design to achieve more positive sweeping of noncondensable gases. Accordingly, redesign of the tube bundles was undertaken with the following desired objectives:

1. The same amount of heat transfer surface (number and length of tubes) would be used.

2. The vapor temperature loss due to pressure drop on the condensing side would not be greater than before.

3. The evaporator shell height or width would not be increased.

4. The bundle would provide positive sweeping of noncondensable gases to the gas vent region. This could be achieved with a round bundle. If a rectangular bundle were used, the steam flow should be downward through a wedge-shaped section followed by an upward flow through a wedge-shaped cooler section.

5. The tube spacing for the 3/4-in. tubes would vary by 1/16-in. increments with a minimum 15/16-in. center-to-center spacing in an equalateral triangular array.

6. The mass velocity of vapor past any row should be such that the Reynolds number would not be in the viscous flow range (desired range between 200 to 2000).

The number of tubes required per bundle was so large that a shrouded rectangular-shaped bundle could meet almost none of the six requirements listed above and was eliminated from further consideration.

The final tube bundle layouts are shown on drawings E-P34787S, E-P34787T, and E-P34787U. The two tube bundle layouts for the heat recovery section have a conventional circular cross section and each contains 12,398 tubes. The tube bundle layout for the heat reject section has an elliptical cross section and contains 5,098 tubes. This unconventional shape was required in order to fit the bundle into the previously designed vessel without making major design changes in the overall dimensions of the vessel.

The elliptical bundle is thought of as a flattened circular bundle because in it and in the circular bundle the distance from any point on the outside circumference to the central region is intended to be the same. It has been shown by experiment on two nearly identical rectangular tube bundles (identical in length, front face cross section, total number of tubes, etc.) that the pressure drop is the same regardless of tube orientation for water, and for air flows corresponding to a range

of Reynolds numbers the same as apply to these condenser bundle design conditions. Because of this, it is believed that in these annular designs, whether the annular sections be elliptical or circular, the flow rate from any point at the periphery of the bundle toward the center of the bundle will be uniform if there is a constant vapor removal rate (by condensation) per tube encounter over the entire face of the bundle (at any given cross section normal to the axis). This, of course, is an idealized assumption because condensate drips will cause the overall heat transfer coefficients to vary with position in the bundle.

The tube bundles that are summarized in Table 8, Summary of Calculated Bundle Performance Characteristics, were drawn on the basis of preliminary calculations which indicated approximate required tube spacings and arrangements to meet the six requirements listed earlier. The calculated pressure drops, temperature losses, etc., in Table 8 were obtained after the design layouts had been made.

7. REFERENCES

1. The Chemical Marketing Newspaper, August 26. 1968.

2. Mothershed, C. T., "ORSEF: A Fortran Code for the Calculation of Multi-Stage Flash Evaporation Desalination Plant Designs," ORNL-TM-1542, Oak Ridge National Laboratory, March, 1966.

3. Mitchell, B. E., R. K. Sood, and W. J. Ross, "Tests of the Deaerator at the Freeport Seawater Desalting Plant and Evaluation of Dissolved Gas Analysis," ORNL-TM-1953, Oak Ridge National Laboratory for Office of Saline Water, October, 1967.

TABLE 8

SUMMARY OF CALCULATED CONDENSER BUNDLE PERFORMANCE CHARACTERISTICS

	Heat Recovery Bundles				Heat Reject Bundle
	Stages 1-25		Stages 26-48		
No. of tubes, condenser section	12,015		12,015		4,942
No. of tubes, gas cooler section	383		383		156
Total	12,398		12,398		5,098
S/D	1.333		1.5		1.41667
O.D., in.	0.75		0.75		0.75
No. of rows, condenser section	58		58		31
No. of rows, gas cooler	45		45		24
Condenser Section	Stage Numbers				
	1	25	26	48	50
G (first row), lb/hr-ft^2	1,540	1,235	813	562	707
G (last row), lb/hr-ft^2	510	328	230	146	99
N(Re) (first row)	2,790	2,600	1,720	1,360	1,750
N(Re) (last row)	890	660	470	340	240
Pressure drop, in. H_2O	.12	.313	.146	.386	.442
Total temperature loss, °F	.009	.081	.040	.51	.78
Whole Bundle					
Overall U, Btu/hr-ft^2-°F	663	590	587	487	404
LMTD	6.82	6.52	6.48	5.60	11.62
Avg. condensing rate, lb/hr-ft	0.937	.759	.747	.517	.886
Avg. temp. loss due to ΔP, °F	.005	.048	.025	.313	.518
Inlet vapor temperature, °F	244.26	170.43	167.33	98.91	88.5

APPENDIX A

COMPUTER PRINTOUTS

I SUMMARY OF PLANT DATA

GENERAL		PERFORMANCE RATIOS	
PLANT CAPACITY, MGD	250.00	INPUT	12.8450
SEA WATER CONCENTRATION	0.03360	CALC	12.8431
PRODUCT CONCENTRATION	0.000025	RECOVER RATIO P	0.1381
DEAERATED FEED CONC.	0.03360	REJECT/EVAP TUBE Q	0.4326
CONCENTRATION RATIO	2.0000		
NO OF STAGES, EVAP	48		
NO STAGES IN REJECT	2		

TEMPERATURES - DEG F		FLOWS, LBS/HR	
STEAM	254.200	TOTAL STEAM	0.712355E 07
MAXIMUM BRINE	250.000	TUBE FLOW, EVAP	0.624547E 09
FINAL EFFECT	103.447	TUBE FLOW,REJ	0.270154E 09
BLOWDOWN	91.800	TOTAL PRODUCT	0.862575E 08
PRODUCT	90.023	RECYCLE FLOW	0.452096E 09
DEAERATED FEED	91.123	EJECTOR SYSTEM	0.620823E 07
OCEAN	65.000	BLOWDOWN	0.861933E 08
		SEA INTAKE	0.304274E 09
BRINE INTO HEATER	238.761	SEAWATER RETURN	0.125594E 09

II DESCRIPTION OF PHYSICAL PLANT

PLANT DIMENSIONS, FT			
OVERALL LENGTH	574.975	OVERALL HEIGHT	18.800
NO OF LEVELS	2.000	FREEBOARD	2.700
PLANT WIDTH	474.580	HEIGHT OFLEVEL	6.700
TOTAL NO OF MODULES	10	EV SHELL VOLUME, FT3	0.171316E 08
NO OF TRAINS	4	REJ SHELL VOLUME, FT3	0.252684E 07

TUBING DESCRIPTION

	BH	EVAPORATOR	REJECT
OUTSIDE DIA, INCHES	0.750	0.750	0.750
WALL THICKNESS, INCHES	0.035	0.035	0.049
K,BTU/HR FT2 F	26.000	26.000	26.000
FOULING RESISTANCE	0.00050	0.00050	0.00070
FLOODING FACTOR	19.000	19.000	19.000
NO OF TUBES	249197.	247970.	101953.
TUBE LENGTH FT	24.140	480.032	70.803
SURFACE AREA, FT2	0.11811857E 07	0.23372154E 08	0.14173621E 07
TUBE VELOCITY	4.50	4.50	5.00
AVE OVERALL UBAR	658.52	578.68	424.32

III HEAD REQUIREMENTS, FT

SEA WATER DELIVERY	66.285
RECYCLE	188.561
PRODUCT DELIVERY	106.758
BLOWDOWN DISCHARGE	40.000
DEAERATOR BOOSTER	29.800

PUMPING POWER REQUIREMENTS, MW

INTAKE PUMPS	8.8360
RECYCLE PUMP	51.5932
PRODUCT PUMPS	4.0343
BLOWDOWN PUMPS	1.5105
BOOSTER PUMPS	1.8628
BLOWERS	3.2212
TOTAL	71.0580

IV SUBSIDIARY SECTIONS

BRINE HEATER		DEAERATOR	
LMDT, F	8.633	TEMP IN-HOT, F	91.586
H INSIDE, B/HR FT2 F	1947.43	TEMP IN-COLD, F	65.000
H OUTSIDE, B/HR FT2 F	2990.13	TEMP OUT, F	91.123
OVERALL U, B/HR-FT2-F	658.521	TEMP TO EJECT, F	70.000
HEAT RATE, BTU/HR	0.671536E 10	FLOW IN-HOT, LB/HR	0.144561E 09
FOULING RESISTANCE	0.00050	FLOW IN-COLD, LB/HR	0.279115E 08
SURFACE AREA, FT2	0.118119E 07	FLOW OUT, LB/HR	0.173025E 09
NO OF TUBES	249197.	VAPOR TO EJECT	0.948267E 04
TUBE LENGTH, FT	24.140	INERTS, LB/HR	0.215590E 05

UPDATE MSF 250 MDG CURRENT TECHNOLOGY 1-24-68 DEPTH#15 FOUL#.0005

STAGE	TTD	CT	C1	C2	QN	UBAR	HI	HO	OM	AS	LS	W-W SF
1	5.5047	0.05786	0.05786	0.05804	0.18286154E 10	663.51	1921.65	3170.49	6.92	0.398087E 06	8.176	0.100000E 01
2	5.5011	0.05786	0.05804	0.05822	0.18275638E 10	661.14	1906.73	3161.37	6.92	0.399412E 06	8.203	0.995327E 00
3	5.5002	0.05786	0.05822	0.05840	0.18265168E 10	658.70	1891.59	3151.68	6.92	0.400717E 06	8.230	0.990683E 00
4	5.4984	0.05786	0.05840	0.05858	0.18254654E 10	656.21	1876.25	3141.75	6.92	0.402116E 06	8.259	0.986066E 00
5	5.4958	0.05786	0.05858	0.05876	0.18244208E 10	653.66	1860.71	3131.55	6.92	0.403608E 06	8.290	0.981476E 00
6	5.4922	0.05786	0.05876	0.05894	0.18233773E 10	651.05	1844.97	3121.11	6.91	0.405206E 06	8.322	0.976913E 00
7	5.4877	0.05786	0.05894	0.05912	0.18223374E 10	648.39	1829.04	3110.44	6.91	0.406909E 06	8.357	0.972375E 00
8	5.4822	0.05786	0.05912	0.05930	0.18212989E 10	645.67	1812.93	3099.53	6.90	0.408723E 06	8.395	0.967864E 00
9	5.4758	0.05786	0.05930	0.05948	0.18202662E 10	642.90	1796.62	3088.37	6.89	0.410647E 06	8.434	0.963377E 00
10	5.4682	0.05786	0.05948	0.05965	0.18192384E 10	640.07	1780.14	3077.01	6.89	0.412695E 06	8.476	0.958914E 00
11	5.4596	0.05786	0.05965	0.05983	0.18182155E 10	637.18	1763.48	3065.42	6.88	0.414863E 06	8.521	0.954474E 00
12	5.4496	0.05786	0.05983	0.06001	0.18172022E 10	634.23	1746.64	3053.64	6.87	0.417173E 06	8.568	0.950058E 00
13	5.4385	0.05786	0.06001	0.06019	0.18161924E 10	631.23	1729.63	3041.65	6.86	0.419616E 06	8.618	0.945663E 00
14	5.4261	0.05786	0.06019	0.06037	0.18151901E 10	628.17	1712.46	3029.47	6.84	0.422206E 06	8.672	0.941291E 00
15	5.4130	0.05786	0.06037	0.06055	0.18141773E 10	625.05	1695.13	3017.01	6.83	0.424901E 06	8.727	0.936939E 00
16	5.3989	0.05786	0.06055	0.06073	0.18131849E 10	621.87	1677.65	3004.33	6.82	0.427741E 06	8.785	0.932607E 00
17	5.3836	0.05786	0.06073	0.06091	0.18121976E 10	618.63	1660.01	2991.45	6.80	0.430730E 06	8.847	0.928296E 00
18	5.3667	0.05786	0.06091	0.06109	0.18112336E 10	615.34	1642.22	2978.42	6.78	0.433901E 06	8.912	0.924003E 00
19	5.3487	0.05786	0.06109	0.06127	0.18102639E 10	611.98	1624.29	2965.18	6.77	0.437229E 06	8.980	0.919729E 00
20	5.3290	0.05786	0.06127	0.06145	0.18093259E 10	608.57	1606.22	2951.82	6.75	0.440761E 06	9.053	0.915473E 00
21	5.3080	0.05786	0.06145	0.06163	0.18083759E 10	605.09	1588.02	2938.27	6.72	0.444468E 06	9.129	0.911233E 00
22	5.2852	0.05786	0.06163	0.06181	0.18074586E 10	601.56	1569.69	2924.60	6.70	0.448396E 06	9.209	0.113376E 01
23	5.2609	0.05786	0.06181	0.06199	0.18065393E 10	597.97	1551.24	2910.76	6.68	0.452523E 06	9.294	0.112850E 01
24	5.2348	0.05786	0.06199	0.06217	0.18056538E 10	594.32	1532.66	2896.84	6.65	0.456899E 06	9.384	0.112326E 01
25	5.2071	0.05786	0.06217	0.06235	0.18047598E 10	590.61	1513.97	2882.76	6.62	0.461496E 06	9.478	0.111804E 01
26	5.1825	0.05786	0.06235	0.06253	0.18039026E 10	586.84	1495.18	2868.61	6.59	0.466369E 06	9.579	0.111283E 01
27	5.1510	0.05786	0.06253	0.06271	0.18030377E 10	583.02	1476.28	2854.32	6.56	0.471487E 06	9.684	0.110764E 01
28	5.1173	0.05786	0.06271	0.06289	0.18022190E 10	579.13	1457.28	2839.99	6.53	0.476922E 06	9.795	0.110246E 01
29	5.0819	0.05786	0.06289	0.06307	0.18013895E 10	575.18	1438.18	2825.54	6.49	0.482631E 06	9.913	0.109730E 01
30	5.0434	0.05786	0.06307	0.06325	0.18006472E 10	571.15	1418.97	2810.49	6.46	0.488407E 06	10.031	0.109215E 01
31	5.0144	0.05786	0.06325	0.06344	0.17998705E 10	567.05	1399.67	2795.18	6.42	0.494392E 06	10.154	0.108701E 01
32	4.9714	0.05786	0.06344	0.06362	0.17990772E 10	562.93	1380.33	2780.72	6.38	0.501196E 06	10.294	0.108188E 01
33	4.9266	0.05786	0.06362	0.06380	0.17983234E 10	558.75	1360.93	2766.17	6.33	0.508361E 06	10.441	0.107676E 01
34	4.8793	0.05786	0.06380	0.06398	0.17976198E 10	554.51	1341.45	2751.61	6.28	0.515958E 06	10.597	0.107164E 01
35	4.8300	0.05786	0.06398	0.06416	0.17969159E 10	550.21	1321.91	2737.00	6.23	0.523961E 06	10.761	0.106654E 01
36	4.7784	0.05786	0.06416	0.06434	0.17962443E 10	545.85	1302.32	2722.37	6.18	0.532425E 06	10.935	0.106143E 01
37	4.7246	0.05786	0.06434	0.06452	0.17955919E 10	541.43	1282.68	2707.71	6.13	0.541365E 06	11.119	0.105633E 01
38	4.6690	0.05786	0.06452	0.06470	0.17949210E 10	536.95	1262.99	2692.98	6.07	0.550751E 06	11.312	0.105123E 01
39	4.6112	0.05786	0.06470	0.06488	0.17943283E 10	532.40	1243.26	2678.25	6.01	0.560705E 06	11.516	0.104612E 01
40	4.5527	0.05786	0.06488	0.06506	0.17936266E 10	527.79	1223.51	2663.30	5.95	0.571029E 06	11.728	0.104102E 01
41	4.4917	0.05786	0.06506	0.06524	0.17930883E 10	523.11	1203.72	2648.40	5.89	0.582027E 06	11.954	0.103591E 01
42	4.4323	0.05786	0.06524	0.06542	0.17922713E 10	518.36	1183.92	2632.98	5.83	0.593178E 06	12.183	0.103080E 01
43	4.3703	0.05786	0.06542	0.06561	0.17917834E 10	513.55	1164.10	2617.64	5.77	0.605128E 06	12.428	0.102568E 01
44	4.3137	0.05786	0.06561	0.06579	0.17907179E 10	508.63	1144.29	2601.26	5.71	0.616760E 06	12.667	0.102056E 01
45	4.2545	0.05786	0.06579	0.06597	0.17902739E 10	503.66	1124.46	2584.97	5.65	0.629338E 06	12.926	0.101542E 01
46	4.2042	0.05786	0.06597	0.06615	0.17886426E 10	498.55	1104.66	2566.60	5.60	0.640521E 06	13.155	0.101028E 01
47	4.1874	0.05786	0.06615	0.06633	0.17860107E 10	493.25	1084.89	2544.73	5.58	0.649058E 06	13.331	0.100514E 01
48	4.2537	0.05786	0.06633	0.06651	0.17780526E 10	487.47	1065.24	2511.02	5.65	0.646143E 06	13.271	0.100000E 01
49	3.5470	0.03360	0.06651	0.06686	0.32311441E 10	437.15	1183.98	2233.73	8.50	0.869988E 06	43.459	0.997272E 00
50	10.0874	0.03360	0.06686	0.06721	0.34966962E 10	403.89	1091.29	1806.57	15.85	0.546123E 06	27.281	0.992107E 00

	Terminal Temperature Difference	Tube Side Salt Concentration	Shell Side Salt Conc. In	Shell Side Salt Conc. Out	Heat Trans-ferred Across Tubes	Overall Heat Transfer Coefficient	Inside Film Coefficient	Outside Film Coefficient	Log Mean Temperature Difference	Tube Area, ft^2	Tube Length	Flashing Area Safety Factor

UPDATE MSF 250 MDG CURRENT TECHNOLOGY 1-24-68 DEPTH#15 FOUL#.0005

STAGE	WV	WS2	WP2	TV2	TS1	TS2	T1	T2	BRINE CFM	PROD CFM
1	0.19277770E 07	0.62261935E 09	0.19277770E 07	244.26	250.00	246.95	235.70	238.76	0.465936E 06	0.
2	0.19162753E 07	0.62070307E 09	0.38440524E 07	241.20	246.95	243.89	232.63	235.70	0.487546E 06	0.114956E 04
3	0.19048900E 07	0.61879818E 09	0.57489423E 07	238.13	243.89	240.84	229.57	232.63	0.510431E 06	0.242361E 04
4	0.18936117E 07	0.61690456E 09	0.76425541E 07	235.07	240.84	237.79	226.50	229.57	0.534675E 06	0.383461E 04
5	0.18824488E 07	0.61502210E 09	0.95250029E 07	232.00	237.79	234.73	223.44	226.50	0.560375E 06	0.539581E 04
6	0.18713920E 07	0.61315070E 09	0.11396395E 08	228.93	234.73	231.68	220.37	223.44	0.587628E 06	0.712268E 04
7	0.18604435E 07	0.61129026E 09	0.13256838E 08	225.86	231.68	228.63	217.31	220.37	0.616544E 06	0.903119E 04
8	0.18495979E 07	0.60944066E 09	0.15106436E 08	222.79	228.63	225.58	214.24	217.31	0.647240E 06	0.111397E 05
9	0.18388571E 07	0.60760179E 09	0.16945293E 08	219.72	225.58	222.52	211.18	214.24	0.679842E 06	0.134678E 05
10	0.18282161E 07	0.60577357E 09	0.18773509E 08	216.65	222.52	219.47	208.12	211.18	0.714487E 06	0.160385E 05
11	0.18176793E 07	0.60395589E 09	0.20591188E 08	213.58	219.47	216.42	205.05	208.12	0.751325E 06	0.188750E 05
12	0.18072369E 07	0.60214865E 09	0.22398425E 08	210.50	216.42	213.36	201.99	205.05	0.790511E 06	0.220065E 05
13	0.17968945E 07	0.60035175E 09	0.24195320E 08	207.43	213.36	210.31	198.92	201.99	0.832223E 06	0.254600E 05
14	0.17866436E 07	0.59856510E 09	0.25981963E 08	204.35	210.31	207.26	195.86	198.92	0.876644E 06	0.292707E 05
15	0.17764894E 07	0.59678861E 09	0.27758453E 08	201.27	207.26	204.20	192.80	195.86	0.923980E 06	0.334657E 05
16	0.17664319E 07	0.59502218E 09	0.29524884E 08	198.19	204.20	201.15	189.73	192.80	0.974455E 06	0.380972E 05
17	0.17564593E 07	0.59326571E 09	0.31281343E 08	195.12	201.15	198.10	186.67	189.73	0.102830E 07	0.432058E 05
18	0.17465821E 07	0.59151913E 09	0.33027926E 08	192.03	198.10	195.04	183.60	186.67	0.108579E 07	0.488470E 05
19	0.17367896E 07	0.58978234E 09	0.34764715E 08	188.95	195.04	191.99	180.54	183.60	0.114719E 07	0.550639E 05
20	0.17270910E 07	0.58805524E 09	0.36491806E 08	185.87	191.99	188.94	177.48	180.54	0.121282E 07	0.619334E 05
21	0.17174701E 07	0.58633777E 09	0.38209276E 08	182.78	188.94	185.89	174.41	177.48	0.128302E 07	0.695062E 05
22	0.17079395E 07	0.58462982E 09	0.39917215E 08	179.70	185.89	182.83	171.35	174.41	0.135814E 07	0.778767E 05
23	0.16984932E 07	0.58293133E 09	0.41615708E 08	176.61	182.83	179.78	168.28	171.35	0.143861E 07	0.871109E 05
24	0.16891281E 07	0.58124219E 09	0.43304836E 08	173.52	179.78	176.73	165.22	168.28	0.152483E 07	0.973267E 05
25	0.16798441E 07	0.57956234E 09	0.44984680E 08	170.43	176.73	173.67	162.16	165.22	0.161731E 07	0.108601E 06
26	0.16706400E 07	0.57789170E 09	0.46655320E 08	167.33	173.67	170.62	159.09	162.16	0.171656E 07	0.121085E 06
27	0.16615138E 07	0.57623018E 09	0.48316834E 08	164.24	170.62	167.57	156.03	159.09	0.182315E 07	0.134874E 06
28	0.16524677E 07	0.57457770E 09	0.49969301E 08	161.14	167.57	164.51	152.96	156.03	0.193772E 07	0.150161E 06
29	0.16434982E 07	0.57293420E 09	0.51612799E 08	158.04	164.51	161.46	149.90	152.96	0.206096E 07	0.167059E 06
30	0.16346074E 07	0.57129959E 09	0.53247406E 08	154.94	161.46	158.41	146.82	149.90	0.219363E 07	0.185862E 06
31	0.16257892E 07	0.56967380E 09	0.54873195E 08	151.83	158.41	155.35	143.76	146.82	0.233656E 07	0.206647E 06
32	0.16170475E 07	0.56805675E 09	0.56490242E 08	148.72	155.35	152.30	140.69	143.76	0.249069E 07	0.229648E 06
33	0.16083774E 07	0.56644837E 09	0.58098619E 08	145.61	152.30	149.25	137.63	140.69	0.265703E 07	0.255206E 06
34	0.15997762E 07	0.56484858E 09	0.59698395E 08	142.50	149.25	146.20	134.56	137.63	0.283670E 07	0.283650E 06
35	0.15912499E 07	0.56325733E 09	0.61289645E 08	139.39	146.20	143.14	131.50	134.56	0.303096E 07	0.315231E 06
36	0.15827907E 07	0.56167454E 09	0.62872435E 08	136.27	143.14	140.09	128.43	131.50	0.324118E 07	0.350393E 06
37	0.15744037E 07	0.56010013E 09	0.64446839E 08	133.15	140.09	137.04	125.36	128.43	0.346891E 07	0.389538E 06
38	0.15660789E 07	0.55853405E 09	0.66012917E 08	130.03	137.04	133.98	122.29	125.36	0.371583E 07	0.433084E 06
39	0.15578299E 07	0.55697622E 09	0.67570747E 08	126.90	133.98	130.93	119.23	122.29	0.398387E 07	0.481774E 06
40	0.15496411E 07	0.55542657E 09	0.69120388E 08	123.78	130.93	127.88	116.16	119.23	0.427513E 07	0.535800E 06
41	0.15415210E 07	0.55388504E 09	0.70661908E 08	120.65	127.88	124.82	113.09	116.16	0.459198E 07	0.596568E 06
42	0.15334616E 07	0.55235158E 09	0.72195369E 08	117.52	124.82	121.77	110.02	113.09	0.493705E 07	0.663600E 06
43	0.15254666E 07	0.55082610E 09	0.73720835E 08	114.38	121.77	118.72	106.95	110.02	0.531335E 07	0.739658E 06
44	0.15175301E 07	0.54930857E 09	0.75238365E 08	111.26	118.72	115.66	103.88	106.95	0.572418E 07	0.822650E 06
45	0.15096564E 07	0.54779890E 09	0.76748021E 08	108.13	115.66	112.61	100.80	103.88	0.617334E 07	0.918065E 06
46	0.15018350E 07	0.54629706E 09	0.78249856E 08	105.01	112.61	109.56	97.73	100.80	0.666503E 07	0.101975E 07
47	0.14940580E 07	0.54480300E 09	0.79743913E 08	101.91	109.56	106.51	94.66	97.73	0.720402E 07	0.112839E 07
48	0.14862830E 07	0.54331671E 09	0.81230196E 08	98.91	106.51	103.45	91.59	94.66	0.779554E 07	0.121964E 07
49	0.28141698E 07	0.54050254E 09	0.84044365E 08	95.14	103.45	97.63	78.42	91.59	0.173905E 08	0.174435E 07
50	0.22131899E 07	0.53771501E 09	0.86257554E 08	88.50	97.63	91.80	65.00	78.42	0.161920E 08	0.389650E 07

	Vapor Flow	Brine Flow Out of Each Stage	Product Flow Leaving	Temp. of Vapor Leaving	Shell Side Brine Temp. In	Shell Side Brine Temp. Leaving	Tube Side Brine Temp In	Tube Side Brine Temp. Leaving	Product CFM	Product Reflashed

UPDATE MSF 250 MDG CURRENT TECHNOLOGY 1-24-68 DEPTH#15 FOUL#.0005

ONE LEVEL OF ONE MODULE

STAGE	VAPOR VEL FT/SEC	TRAY FLOW LB/HR FT	TRAY WIDTH FT	RES TIME SEC	PV	DELP AVAILABLE	DELP REQUIRED	A	ALPHA	DTPD
1	9.291495	0.100000E 07	31.227357	1.678415	0.26957E 02	0.14393E 01	0.81190E 00	0.95792E 01	2.683	0.82
2	9.688374	0.995327E 06	31.277117	1.725586	0.25518E 02	0.13763E 01	0.80570E 00	0.97585E 01	2.695	0.84
3	10.108258	0.990683E 06	31.327042	1.742230	0.24142E 02	0.13154E 01	0.79956E 00	0.99438E 01	2.708	0.87
4	10.549475	0.986066E 06	31.377131	1.759413	0.22826E 02	0.12565E 01	0.79350E 00	0.10136E 02	2.721	0.89
5	11.013376	0.981476E 06	31.427394	1.777139	0.21570E 02	0.11996E 01	0.78751E 00	0.10334E 02	2.736	0.92
6	11.500925	0.976913E 06	31.477844	1.795473	0.20370E 02	0.11446E 01	0.78159E 00	0.10540E 02	2.751	0.95
7	12.013562	0.972375E 06	31.528494	1.814427	0.19225E 02	0.10915E 01	0.77574E 00	0.10753E 02	2.767	0.98
8	12.552641	0.967864E 06	31.579357	1.834030	0.18134E 02	0.10402E 01	0.76996E 00	0.10973E 02	2.784	1.00
9	13.119771	0.963377E 06	31.630447	1.854299	0.17094E 02	0.99081E 00	0.76425E 00	0.11202E 02	2.802	1.03
10	13.716238	0.958914E 06	31.681777	1.875300	0.16103E 02	0.94315E 00	0.75860E 00	0.11439E 02	2.820	1.06
11	14.343944	0.954474E 06	31.733363	1.897039	0.15160E 02	0.89729E 00	0.75301E 00	0.11685E 02	2.840	1.10
12	15.004021	0.950058E 06	31.785220	1.919623	0.14262E 02	0.85308E 00	0.74750E 00	0.11940E 02	2.861	1.13
13	15.698826	0.945663E 06	31.837365	1.943030	0.13409E 02	0.81057E 00	0.74204E 00	0.12204E 02	2.884	1.16
14	16.429936	0.941291E 06	31.889817	1.967339	0.12599E 02	0.76950E 00	0.73665E 00	0.12480E 02	2.907	1.20
15	17.201482	0.936939E 06	31.942591	1.992357	0.11829E 02	0.73016E 00	0.73132E 00	0.12766E 02	2.931	1.24
16	18.014380	0.932607E 06	31.995703	2.018295	0.11099E 02	0.69238E 00	0.72605E 00	0.13062E 02	2.956	1.27
17	18.871043	0.928296E 06	32.049170	2.045186	0.10407E 02	0.65620E 00	0.72083E 00	0.13369E 02	2.982	1.31
18	19.772863	0.924003E 06	32.103010	2.073211	0.97506E 01	0.62141E 00	0.71568E 00	0.13689E 02	3.010	1.35
19	20.723871	0.919729E 06	32.157247	2.102265	0.91292E 01	0.58818E 00	0.71059E 00	0.14021E 02	3.039	1.39
20	21.725070	0.915473E 06	32.211899	2.132602	0.85410E 01	0.55624E 00	0.70555E 00	0.14366E 02	3.069	1.43
21	22.781104	0.911233E 06	32.266994	2.164094	0.79848E 01	0.52576E 00	0.70057E 00	0.14725E 02	3.101	1.48
22	23.893303	0.907010E 06	32.322551	2.196996	0.74590E 01	0.49654E 00	0.69565E 00	0.15098E 02	3.135	1.52
23	25.066581	0.902803E 06	32.378599	2.231221	0.69625E 01	0.46870E 00	0.69078E 00	0.15486E 02	3.170	1.57
24	26.302110	0.898610E 06	32.435163	2.267050	0.64938E 01	0.44203E 00	0.68596E 00	0.15891E 02	3.207	1.62
25	27.605944	0.894431E 06	32.492275	2.304356	0.60517E 01	0.41666E 00	0.68120E 00	0.16311E 02	3.246	1.67
26	28.979217	0.890266E 06	32.549961	2.343461	0.56351E 01	0.39240E 00	0.67649E 00	0.16749E 02	3.287	1.72
27	30.428754	0.886113E 06	32.608255	2.384233	0.52427E 01	0.36936E 00	0.67183E 00	0.17204E 02	3.329	1.78
28	31.955219	0.881971E 06	32.667190	2.427071	0.48733E 01	0.34735E 00	0.66722E 00	0.17680E 02	3.374	1.83
29	33.566905	0.877840E 06	32.726804	2.471795	0.45260E 01	0.32655E 00	0.66266E 00	0.18172E 02	3.421	1.89
30	35.285965	0.873718E 06	32.787132	2.517306	0.41994E 01	0.30666E 00	0.65815E 00	0.18689E 02	3.472	1.95
31	37.109700	0.869606E 06	32.848181	2.564393	0.38928E 01	0.28770E 00	0.65369E 00	0.19229E 02	3.524	2.02
32	38.996709	0.865503E 06	32.909979	2.616409	0.36051E 01	0.26974E 00	0.64928E 00	0.19792E 02	3.578	2.08
33	40.989095	0.861407E 06	32.972627	2.670924	0.33353E 01	0.25275E 00	0.64492E 00	0.20378E 02	3.635	2.15
34	43.088780	0.857315E 06	33.036171	2.728372	0.30826E 01	0.23660E 00	0.64060E 00	0.20991E 02	3.694	2.22
35	45.306513	0.853228E 06	33.100665	2.788671	0.28460E 01	0.22131E 00	0.63633E 00	0.21632E 02	3.755	2.30
36	47.646572	0.849145E 06	33.166159	2.852169	0.26247E 01	0.20681E 00	0.63211E 00	0.22303E 02	3.820	2.37
37	50.117674	0.845063E 06	33.232710	2.919004	0.24179E 01	0.19304E 00	0.62793E 00	0.23009E 02	3.887	2.45
38	52.733333	0.840982E 06	33.300380	2.989074	0.22248E 01	0.18005E 00	0.62380E 00	0.23746E 02	3.956	2.53
39	55.493956	0.836900E 06	33.369222	3.063121	0.20448E 01	0.16765E 00	0.61971E 00	0.24528E 02	4.028	2.62
40	58.432596	0.832817E 06	33.439309	3.140089	0.18771E 01	0.15601E 00	0.61566E 00	0.25343E 02	4.102	2.70
41	61.532269	0.828731E 06	33.510686	3.221775	0.17211E 01	0.14478E 00	0.61165E 00	0.26222E 02	4.178	2.79
42	64.866359	0.824640E 06	33.583438	3.305252	0.15764E 01	0.13435E 00	0.60769E 00	0.27133E 02	4.254	2.88
43	68.381506	0.820545E 06	33.657584	3.394305	0.14420E 01	0.12412E 00	0.60377E 00	0.28138E 02	4.333	2.97
44	72.229663	0.816444E 06	33.733224	3.482514	0.13179E 01	0.11474E 00	0.59989E 00	0.29171E 02	4.408	3.05
45	76.285903	0.812339E 06	33.810318	3.577277	0.12031E 01	0.10530E 00	0.59605E 00	0.30354E 02	4.486	3.14
46	80.874380	0.808226E 06	33.888983	3.664875	0.10978E 01	0.96018E-01	0.59225E 00	0.31686E 02	4.552	3.22
47	86.225822	0.804110E 06	33.969047	3.737699	0.10018E 01	0.85526E-01	0.58849E 00	0.33466E 02	4.594	3.27
48	93.741134	0.800000E 06	34.050178	3.742694	0.91630E 00	0.97032E-01	0.58477E 00	0.31320E 02	4.545	3.24
49	62.380457	0.797818E 06	34.050178	12.591806	0.81927E 00	0.14459E 00	0.58109E 00	0.25567E 02	2.489	1.20
50	93.086899	0.793685E 06	34.050178	7.910161	0.67468E 00	0.	0.57417E 00	0.	3.303	2.04

Stage Pressure

Orifice Area Out

Total Boiling Point Elevation

Boiling Point Elev. in Excess of Chemical Elevation

UPDATE MSF 250 MDG CURRENT TECHNOLOGY 1-24-68 DEPTH#15 FOUL#.0005

STAGE	AREA DM	DPTDM	DTDM	CPRDD	WIDDM	SUB	TPRDD
1	0.41053965E 02	0.16616837E-01	0.33218384E-01	0.35998630E-05	0.52995844E 01	0.77944571E 00	0.24505069E 03
2	0.41719313E 02	0.16758498E-01	0.35232544E-01	0.38519031E-05	0.53644850E 01	0.80083035E 00	0.24200753E 03
3	0.42353928E 02	0.16896277E-01	0.37132263E-01	0.38251289E-05	0.54249175E 01	0.82297476E 00	0.23896449E 03
4	0.43011806E 02	0.17035442E-01	0.39184570E-01	0.37350703E-05	0.54863837E 01	0.84570765E 00	0.23592131E 03
5	0.43693861E 02	0.17176033E-01	0.41328430E-01	0.36244704E-05	0.55489244E 01	0.86905374E 00	0.23287803E 03
6	0.44401367E 02	0.17318022E-01	0.43640137E-01	0.35073074E-05	0.56123456E 01	0.89300250E 00	0.22983457E 03
7	0.45135141E 02	0.17461528E-01	0.46157837E-01	0.33893319E-05	0.56769131E 01	0.91761327E 00	0.22679093E 03
8	0.45896667E 02	0.17606491E-01	0.48789978E-01	0.32732456E-05	0.57423237E 01	0.94286159E 00	0.22374716E 03
9	0.46686869E 02	0.17753010E-01	0.51605225E-01	0.31603878E-05	0.58087963E 01	0.96880247E 00	0.22070321E 03
10	0.47507210E 02	0.17901073E-01	0.54603577E-01	0.30514360E-05	0.58761585E 01	0.99543323E 00	0.21765908E 03
11	0.48358920E 02	0.18050758E-01	0.57838440E-01	0.29467085E-05	0.59445373E 01	0.10227958E 01	0.21461471E 03
12	0.49243596E 02	0.18202178E-01	0.61271667E-01	0.28463182E-05	0.60141990E 01	0.10509456E 01	0.21157013E 03
13	0.50162229E 02	0.18355423E-01	0.64956665E-01	0.27502615E-05	0.60853259E 01	0.10799393E 01	0.20852530E 03
14	0.51117078E 02	0.18510326E-01	0.68870544E-01	0.26584749E-05	0.61571802E 01	0.11096984E 01	0.20548025E 03
15	0.52406523E 02	0.18499655E-01	0.72471619E-01	0.25761982E-05	0.62657457E 01	0.11403168E 01	0.20243549E 03
16	0.53902605E 02	0.18405669E-01	0.75935364E-01	0.25042372E-05	0.63941649E 01	0.11717421E 01	0.19939087E 03
17	0.55463144E 02	0.18311936E-01	0.79612732E-01	0.24407315E-05	0.65254332E 01	0.12040639E 01	0.19634603E 03
18	0.57089637E 02	0.18219335E-01	0.83557129E-01	0.23842102E-05	0.66587824E 01	0.12372403E 01	0.19330091E 03
19	0.58787481E 02	0.18126971E-01	0.87692261E-01	0.23335353E-05	0.67951161E 01	0.12713844E 01	0.19025560E 03
20	0.60557467E 02	0.18036345E-01	0.92140198E-01	0.22877589E-05	0.69330099E 01	0.13063931E 01	0.18720997E 03
21	0.62406031E 02	0.17946062E-01	0.96862793E-01	0.22461471E-05	0.70738841E 01	0.13424376E 01	0.18416406E 03
22	0.64333400E 02	0.17858024E-01	0.10186005E 00	0.22080573E-05	0.72158362E 01	0.13793745E 01	0.18111786E 03
23	0.66347384E 02	0.17770597E-01	0.10723877E 00	0.21729937E-05	0.73605705E 01	0.14173984E 01	0.17807126E 03
24	0.68446930E 02	0.17686177E-01	0.11296844E 00	0.21404962E-05	0.75055550E 01	0.14563203E 01	0.17502431E 03
25	0.70642500E 02	0.17602376E-01	0.11912537E 00	0.21102250E-05	0.76533574E 01	0.14964110E 01	0.17197693E 03
26	0.72930078E 02	0.17522793E-01	0.12570190E 00	0.20818287E-05	0.77999918E 01	0.15373598E 01	0.16892910E 03
27	0.75323996E 02	0.17443897E-01	0.13275909E 00	0.20550709E-05	0.79493684E 01	0.15795558E 01	0.16588080E 03
28	0.77816909E 02	0.17370421E-01	0.14035034E 00	0.20296733E-05	0.80960184E 01	0.16225675E 01	0.16283194E 03
29	0.80426782E 02	0.17297948E-01	0.14850616E 00	0.20054680E-05	0.82449889E 01	0.16668815E 01	0.15978250E 03
30	0.83159160E 02	0.17226885E-01	0.15722656E 00	0.19823052E-05	0.83958549E 01	0.17125843E 01	0.15673249E 03
31	0.86029653E 02	0.17154556E-01	0.16658020E 00	0.19600926E-05	0.85519615E 01	0.17599636E 01	0.15368183E 03
32	0.88980946E 02	0.17100827E-01	0.17687225E 00	0.19384883E-05	0.86885336E 01	0.18068117E 01	0.15063021E 03
33	0.92072904E 02	0.17048746E-01	0.18791199E 00	0.19174190E-05	0.88262486E 01	0.18550582E 01	0.14757784E 03
34	0.95274808E 02	0.17009301E-01	0.19995117E 00	0.18966940E-05	0.89509296E 01	0.19035433E 01	0.14452444E 03
35	0.98631760E 02	0.16971542E-01	0.21296692E 00	0.18762777E-05	0.90763986E 01	0.19534919E 01	0.14147006E 03
36	0.10209853E 03	0.16950927E-01	0.22725677E 00	0.18559829E-05	0.91822232E 01	0.20031933E 01	0.13841438E 03
37	0.10572434E 03	0.16932251E-01	0.24275970E 00	0.18358069E-05	0.92881430E 01	0.20543765E 01	0.13535748E 03
38	0.10944545E 03	0.16937190E-01	0.25988770E 00	0.18155589E-05	0.93650002E 01	0.21045163E 01	0.13229894E 03
39	0.11334942E 03	0.16944327E-01	0.27854919E 00	0.17952688E-05	0.94412673E 01	0.21561138E 01	0.12923884E 03
40	0.11731300E 03	0.16984364E-01	0.29934692E 00	0.17755500E-05	0.94753146E 01	0.22054026E 01	0.12617659E 03
41	0.12147232E 03	0.17027067E-01	0.32209015E 00	0.17575175E-05	0.95080453E 01	0.22560140E 01	0.12311237E 03
42	0.12563302E 03	0.17116724E-01	0.34784698E 00	0.17408213E-05	0.94797010E 01	0.23022112E 01	0.12004511E 03
43	0.12999764E 03	0.17210011E-01	0.37607574E 00	0.17253730E-05	0.94494197E 01	0.23493901E 01	0.11697538E 03
44	0.13426170E 03	0.17371864E-01	0.40861511E 00	0.17107323E-05	0.93315890E 01	0.23885888E 01	0.11390130E 03
45	0.13872997E 03	0.17539587E-01	0.44456482E 00	0.16968319E-05	0.92115643E 01	0.24279497E 01	0.11082380E 03
46	0.14291967E 03	0.17811265E-01	0.48696136E 00	0.16831029E-05	0.89663774E 01	0.24529305E 01	0.10773982E 03
47	0.15095411E 03	0.17173395E-01	0.50686646E 00	0.16695100E-05	0.89363246E 01	0.24761504E 01	0.10467832E 03
48	0.16339591E 03	0.15760111E-01	0.50250244E 00	0.16554981E-05	0.90067936E 01	0.24412372E 01	0.10164107E 03
49	0.35398000E 03	0.13912240E-01	0.49765015E 00	0.16240249E-05	0.86138751E 01	0.43684147E 00	0.95841657E 02
50	0.33042292E 03	0.12256447E-01	0.51206207E 00	0.16170889E-05	0.11565320E 02	0.10470915E 01	0.90022882E 02

Area of Demister	Pressure Drop Across Demister	Temperature Drop Across Demister	Concentration of Product	Width of Demister	Submergence Loss	Temperature of Product Water

UPDATE MSF 250 MDG CURRENT TECHNOLOGY 1-24-68 DEPTH#15 FOUL#.0005

TUBE BUNDLE IN EVAPORATOR SECTION

TUBE OD, INCHES	0.750000E 00	NO OF TUBES/BNDLE	0.619859E 04		
VERT ROWS	0.690000E 02	HORIZ ROWS	0.900000E 02	S/D RATIO	0.130000E 01
BUNDLE HT, FT	0.484715E 01	BUNDLE WIDTH, FT	0.729375E 01	BUNDLE WIDTH + 3	0.102937E 02

TUBE BUNDLE IN REJECT SECTION

TUBE OD, INCHES	0.750000E 00	NO OF TUBES/BNDLE	0.255452E 04		
VERT ROWS	0.730000E 02	HORIZ ROWS	0.350000E 02	S/D RATIO	0.130000E 01
BUNDLE HT, FT	0.512860E 01	BUNDLE WIDTH, FT	0.282500E 01	BUNDLE WIDTH + 3	0.582500E 01

I	DPINIT	DTINIT	DPCLR	DTCLR	DTCND
1	0.14123838E-02	0.28152466E-02	0.22063255E-02	0.44021606E-02	0.72174072E-02
2	0.14633352E-02	0.30746460E-02	0.22891760E-02	0.48103333E-02	0.78849792E-02
3	0.15142866E-02	0.33340454E-02	0.23720264E-02	0.52185059E-02	0.85525513E-02
4	0.15636589E-02	0.36087036E-02	0.24529696E-02	0.56648254E-02	0.92735291E-02
5	0.16130313E-02	0.38833618E-02	0.25339127E-02	0.61111450E-02	0.99945068E-02
6	0.16656398E-02	0.42152405E-02	0.26206970E-02	0.66413879E-02	0.10856628E-01
7	0.17182484E-02	0.45471191E-02	0.27074814E-02	0.71716309E-02	0.11718750E-01
8	0.17742153E-02	0.49285889E-02	0.28005838E-02	0.78086853E-02	0.12737274E-01
9	0.18301822E-02	0.53100586E-02	0.28936863E-02	0.84457397E-02	0.13755798E-01
10	0.18896465E-02	0.57716370E-02	0.29920936E-02	0.91819763E-02	0.14953613E-01
11	0.19491109E-02	0.62332153E-02	0.30905008E-02	0.99182129E-02	0.16151428E-01
12	0.20126528E-02	0.67901611E-02	0.31974316E-02	0.10826111E-01	0.17616272E-01
13	0.20761947E-02	0.73471069E-02	0.33043623E-02	0.11734009E-01	0.19081116E-01
14	0.21436452E-02	0.80032349E-02	0.34186840E-02	0.12798309E-01	0.20801544E-01
15	0.22110958E-02	0.86593628E-02	0.35330057E-02	0.13862610E-01	0.22521973E-01
16	0.22823336E-02	0.94566345E-02	0.36545396E-02	0.15155792E-01	0.24612427E-01
17	0.23535714E-02	0.10253906E-01	0.37760735E-02	0.16448975E-01	0.26702881E-01
18	0.24286114E-02	0.11192322E-01	0.39052963E-02	0.17997742E-01	0.29190063E-01
19	0.25036516E-02	0.12130737E-01	0.40345192E-02	0.19546509E-01	0.31677246E-01
20	0.25822989E-02	0.13256073E-01	0.41705966E-02	0.21411896E-01	0.34667969E-01
21	0.26609461E-02	0.14381409E-01	0.43066740E-02	0.23277283E-01	0.37658691E-01
22	0.27429109E-02	0.15727997E-01	0.44497848E-02	0.25520325E-01	0.41248322E-01
23	0.28248758E-02	0.17074585E-01	0.45928955E-02	0.27763367E-01	0.44837952E-01
24	0.29096626E-02	0.18692017E-01	0.47429204E-02	0.30475616E-01	0.49167633E-01
25	0.29944494E-02	0.20309448E-01	0.48929453E-02	0.33187866E-01	0.53497314E-01
26	0.30812141E-02	0.22232056E-01	0.50474405E-02	0.36453247E-01	0.58685303E-01
27	0.31679788E-02	0.24154663E-01	0.52019358E-02	0.39718628E-01	0.63873291E-01
28	0.32556152E-02	0.26458740E-01	0.53602457E-02	0.43636322E-01	0.70095062E-01
29	0.33432517E-02	0.28762817E-01	0.55185556E-02	0.47554016E-01	0.76316833E-01
30	0.34352930E-02	0.31551361E-01	0.56853592E-02	0.52307129E-01	0.83858490E-01
31	0.35273344E-02	0.34339905E-01	0.58521628E-02	0.57060242E-01	0.91400146E-01
32	0.36102658E-02	0.37578583E-01	0.60060620E-02	0.62629700E-01	0.10020828E 00
33	0.36931971E-02	0.40817261E-01	0.61599612E-02	0.68199158E-01	0.10901642E 00
34	0.37693384E-02	0.44624329E-01	0.63040107E-02	0.74752808E-01	0.11937714E 00
35	0.38454796E-02	0.48431396E-01	0.64480603E-02	0.81306458E-01	0.12973785E 00
36	0.39101489E-02	0.52829928E-01	0.65738261E-02	0.88966370E-01	0.14179230E 00
37	0.39748182E-02	0.57220459E-01	0.66995919E-02	0.96626282E-01	0.15384674E 00
38	0.40213888E-02	0.62198639E-01	0.67929924E-02	0.10530472E 00	0.16750336E 00
39	0.40679594E-02	0.67176819E-01	0.68863928E-02	0.11398315E 00	0.18115997E 00
40	0.40874172E-02	0.72647095E-01	0.69300607E-02	0.12347412E 00	0.19612122E 00
41	0.41068749E-02	0.78117371E-01	0.69737285E-02	0.13296509E 00	0.21108246E 00
42	0.40867893E-02	0.83778381E-01	0.69421157E-02	0.14268112E 00	0.22645950E 00
43	0.40667037E-02	0.89439392E-01	0.69105029E-02	0.15239716E 00	0.24183655E 00
44	0.39905959E-02	0.94707489E-01	0.67832693E-02	0.16145706E 00	0.25616455E 00
45	0.39144881E-02	0.99975586E-01	0.66560358E-02	0.17051697E 00	0.27049255E 00

NOTE: This bundle design is superseded by that of 6.7.

Vapor Pres. Loss, Entr. Bundle — Vapor Temp. Loss, Entr. Bundle — Vapor Pres. Loss, Bundle — Vapor Temp. Loss, Bundle — Vapor Temp. Loss, Bundle and Entr.

	Vapor Pres. Loss, Entrance Bundle	Vapor Temp. Loss, Entrance Bundle	Vapor Pres. Loss, Bundle	Vapor Temp. Loss, Bundle	Vapor Temp. Loss, Bundle and Entrance
46	0.37597264E-02	0.10364914E 00	0.63944906E-02	0.17687988E 00	0.28052902E 00
47	0.36049647E-02	0.10732269E 00	0.61329454E-02	0.18324280E 00	0.29056549E 00
48	0.33668207E-02	0.10828400E 00	0.57284236E-02	0.18492889E 00	0.29321289E 00
49	0.31362785E-02	0.11316681E 00	0.42787641E-02	0.15495300E 00	0.26811981E 00
50	0.47818904E-02	0.20186615E 00	0.65278783E-02	0.27737427E 00	0.47924042E 00

APPENDIX B

DESIGN DRAWINGS

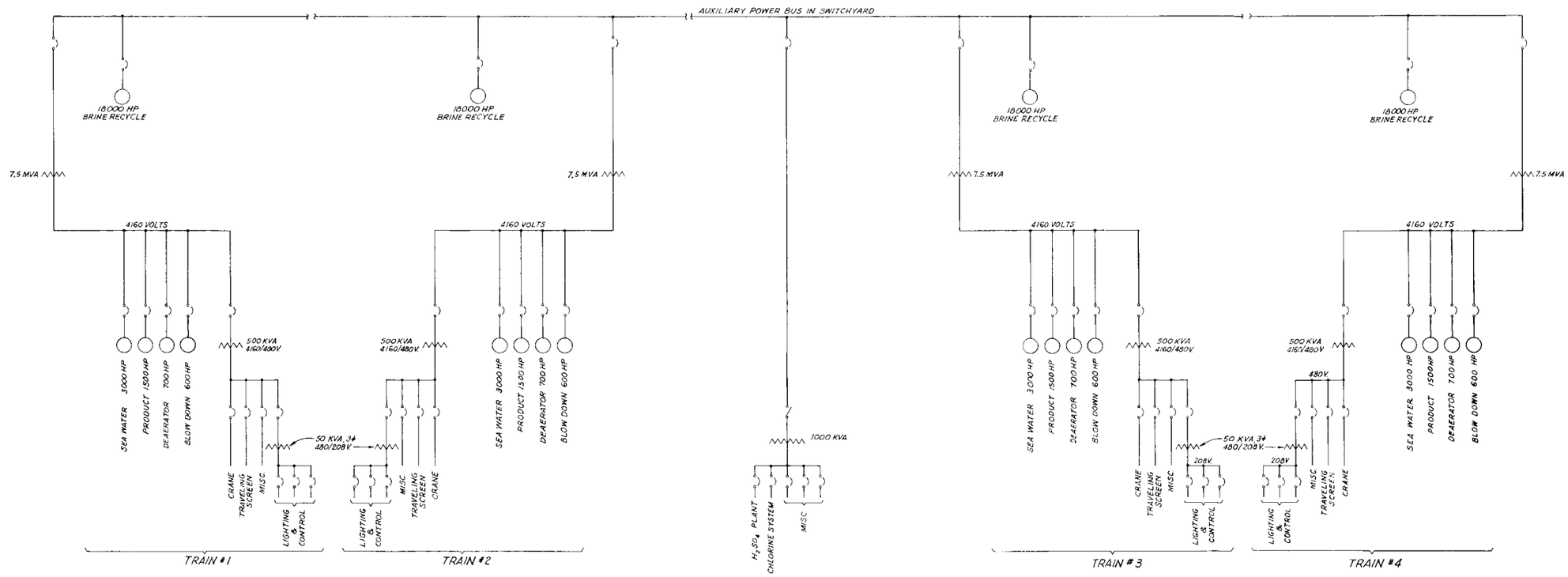

NO.	BY	APP'D	DATE	DESCRIPTION		CIVIL	MECH.	ELEC.	INST.	MACH.
2	WPH	WAB	11-14-68	REVISED BRINE RECYCLE CONNECTION	E.S.O. M-34787					
1	WPH	WAB	2-12-68	REVISED IP OF BRINE RECYCLE	E.S.O. M-34787					
0						DATE 9-15-67	9-15-67	9-15-67	9-15-67	
						SQUAD CHECK				

REVISIONS

REFERENCES:

E.S.O. NO. M-34787

CHARGE

B.M. NO.

		DATE
SCALE	NONE	
DESIGN BY	L. H. BARNETT	9-67
DRAWN BY	W. P. HALE, JR.	9-67
CHECKED BY	WAB	9-67
APPROVAL DEPT.	WAB	9-67
OPER.		
APPROVAL DIV.	WAB for AJT	9-67
SAFETY		

STUDY OF LARGE MSF PLANT
FOR OFFICE OF SALINE WATER

UNION CARBIDE CORPORATION
NUCLEAR DIVISION
OAK RIDGE GASEOUS DIFFUSION PLANT

250 MGD MSF PLANT
1967 TECHNOLOGY
ONE LINE DIAGRAM

BLDG. NO.
LOCATION

E-E-34787.A REV. 2

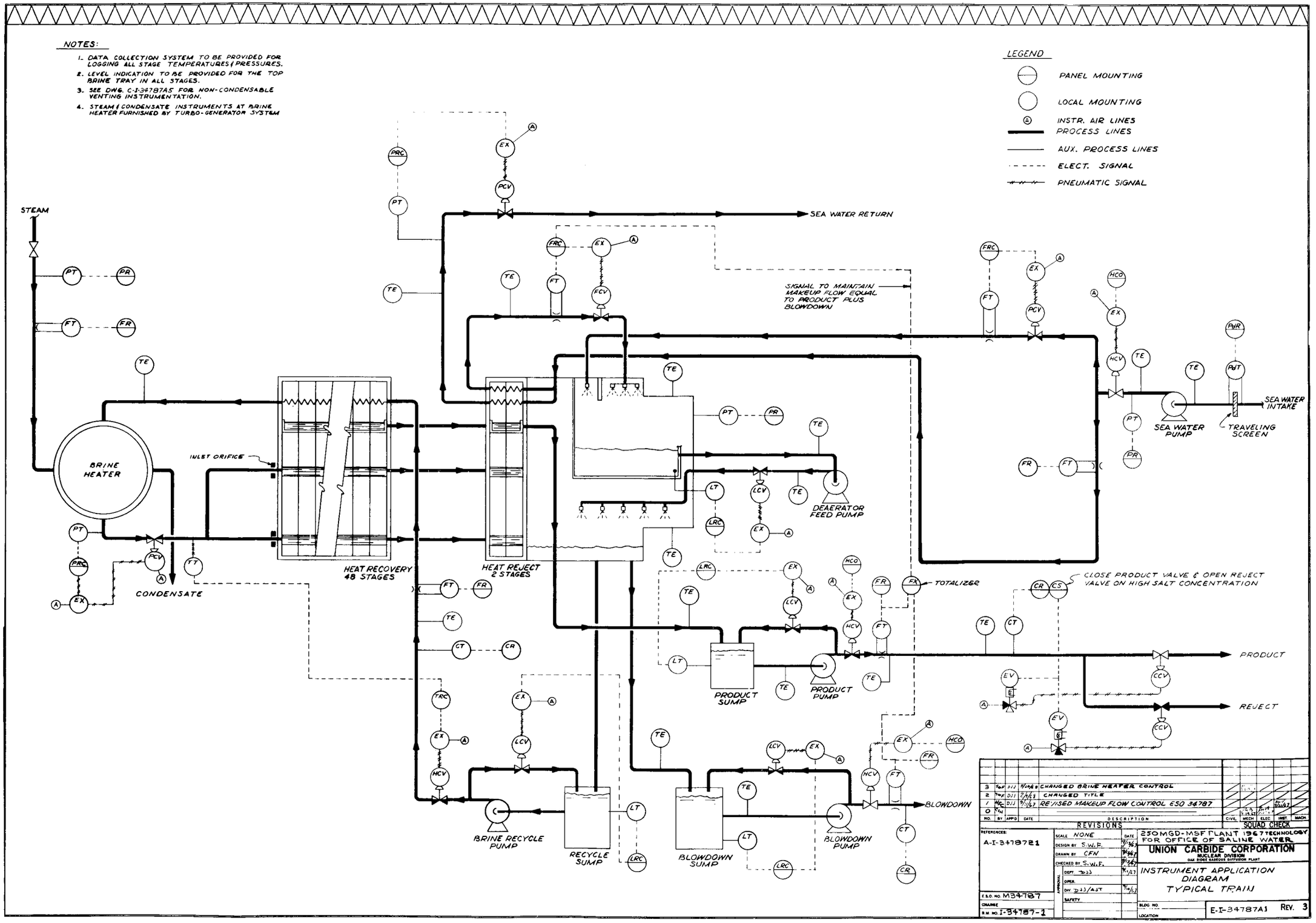
NOTES:
1. DATA COLLECTION SYSTEM TO BE PROVIDED FOR LOGGING ALL STAGE TEMPERATURES & PRESSURES.
2. LEVEL INDICATION TO BE PROVIDED FOR THE TOP BRINE TRAY IN ALL STAGES.
3. SEE DWG. C-I-34787A5 FOR NON-CONDENSABLE VENTING INSTRUMENTATION.
4. STEAM & CONDENSATE INSTRUMENTS AT BRINE HEATER FURNISHED BY TURBO-GENERATOR SYSTEM
LEGEND
PANEL MOUNTING
LOCAL MOUNTING
INSTR. AIR LINES
PROCESS LINES
AUX. PROCESS LINES
ELECT. SIGNAL
PNEUMATIC SIGNAL
STEAM
BRINE HEATER
CONDENSATE
INLET ORIFICE
HEAT RECOVERY 48 STAGES
HEAT REJECT 2 STAGES
SEA WATER RETURN
SIGNAL TO MAINTAIN MAKEUP FLOW EQUAL TO PRODUCT PLUS BLOWDOWN
DEAERATOR FEED PUMP
SEA WATER PUMP
TRAVELING SCREEN
SEA WATER INTAKE
TOTALIZER
CLOSE PRODUCT VALVE & OPEN REJECT VALVE ON HIGH SALT CONCENTRATION
PRODUCT
REJECT
PRODUCT SUMP
PRODUCT PUMP
BRINE RECYCLE PUMP
RECYCLE SUMP
BLOWDOWN SUMP
BLOWDOWN PUMP
BLOWDOWN
3 CHANGED BRINE HEATER CONTROL
2 CHANGED TITLE
1 REVISED MAKEUP FLOW CONTROL ESO 34787
REVISIONS
SQUAD CHECK
REFERENCES: A-I-34787A1
E.S.O. NO. M34787
CHANGE
B.M. NO. I-34787-1
SCALE NONE
DESIGN BY S.W.F.
DRAWN BY CFN
CHECKED BY S.W.F.
250MGD-MSF PLANT 1967 TECHNOLOGY FOR OFFICE OF SALINE WATER
UNION CARBIDE CORPORATION
NUCLEAR DIVISION
OAK RIDGE GASEOUS DIFFUSION PLANT
INSTRUMENT APPLICATION DIAGRAM
TYPICAL TRAIN
BLDG. NO.
LOCATION
E-I-34787A1 REV. 3

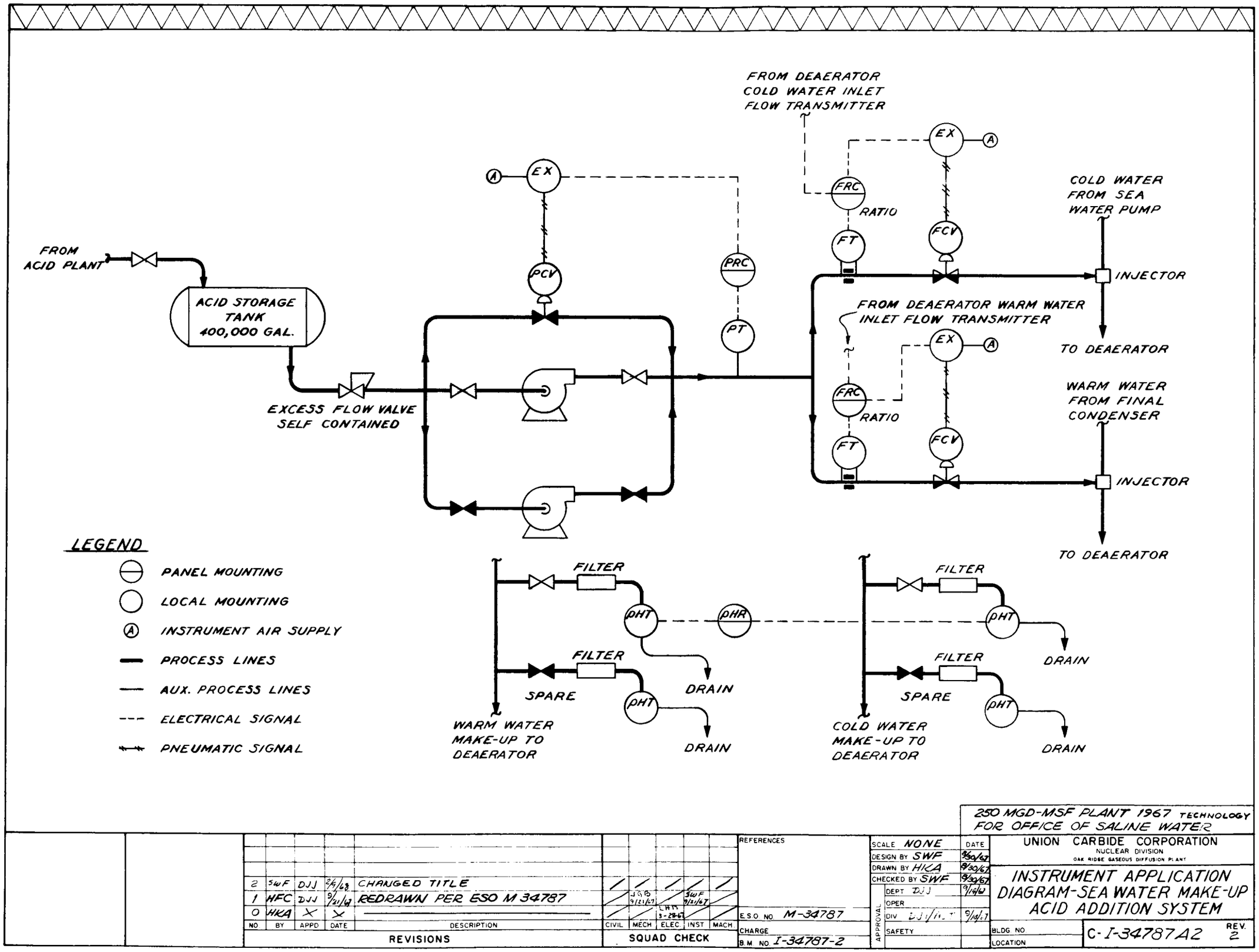
FROM DEAERATOR COLD WATER INLET FLOW TRANSMITTER
FROM ACID PLANT
ACID STORAGE TANK 400,000 GAL.
EXCESS FLOW VALVE SELF CONTAINED
EX
PCV
PRC
PT
FRC
RATIO
FT
FCV
COLD WATER FROM SEA WATER PUMP
INJECTOR
FROM DEAERATOR WARM WATER INLET FLOW TRANSMITTER
TO DEAERATOR
WARM WATER FROM FINAL CONDENSER
INJECTOR
TO DEAERATOR
LEGEND
PANEL MOUNTING
LOCAL MOUNTING
INSTRUMENT AIR SUPPLY
PROCESS LINES
AUX. PROCESS LINES
ELECTRICAL SIGNAL
PNEUMATIC SIGNAL
FILTER
PHT
PHR
SPARE
DRAIN
WARM WATER MAKE-UP TO DEAERATOR
COLD WATER MAKE-UP TO DEAERATOR
250 MGD-MSF PLANT 1967 TECHNOLOGY FOR OFFICE OF SALINE WATER
UNION CARBIDE CORPORATION
NUCLEAR DIVISION
OAK RIDGE GASEOUS DIFFUSION PLANT
INSTRUMENT APPLICATION DIAGRAM-SEA WATER MAKE-UP ACID ADDITION SYSTEM
C-I-34787A2
REV. 2
REVISIONS
2 SWF DJJ 2/6/68 CHANGED TITLE
1 HFC DJJ 9/21/67 REDRAWN PER ESO M 34787
0 HKA X X
NO BY APPD DATE DESCRIPTION
SQUAD CHECK
CIVIL MECH ELEC INST MACH
REFERENCES
E.S.O. NO. M-34787
CHARGE
B.M. NO. I-34787-2
SCALE NONE
DESIGN BY SWF 8/30/67
DRAWN BY HKA 8/30/67
CHECKED BY SWF 8/30/67
APPROVAL
DEPT DJJ 9/14/67
OPER
DIV DJJ 9/14/67
SAFETY
BLDG. NO.
LOCATION

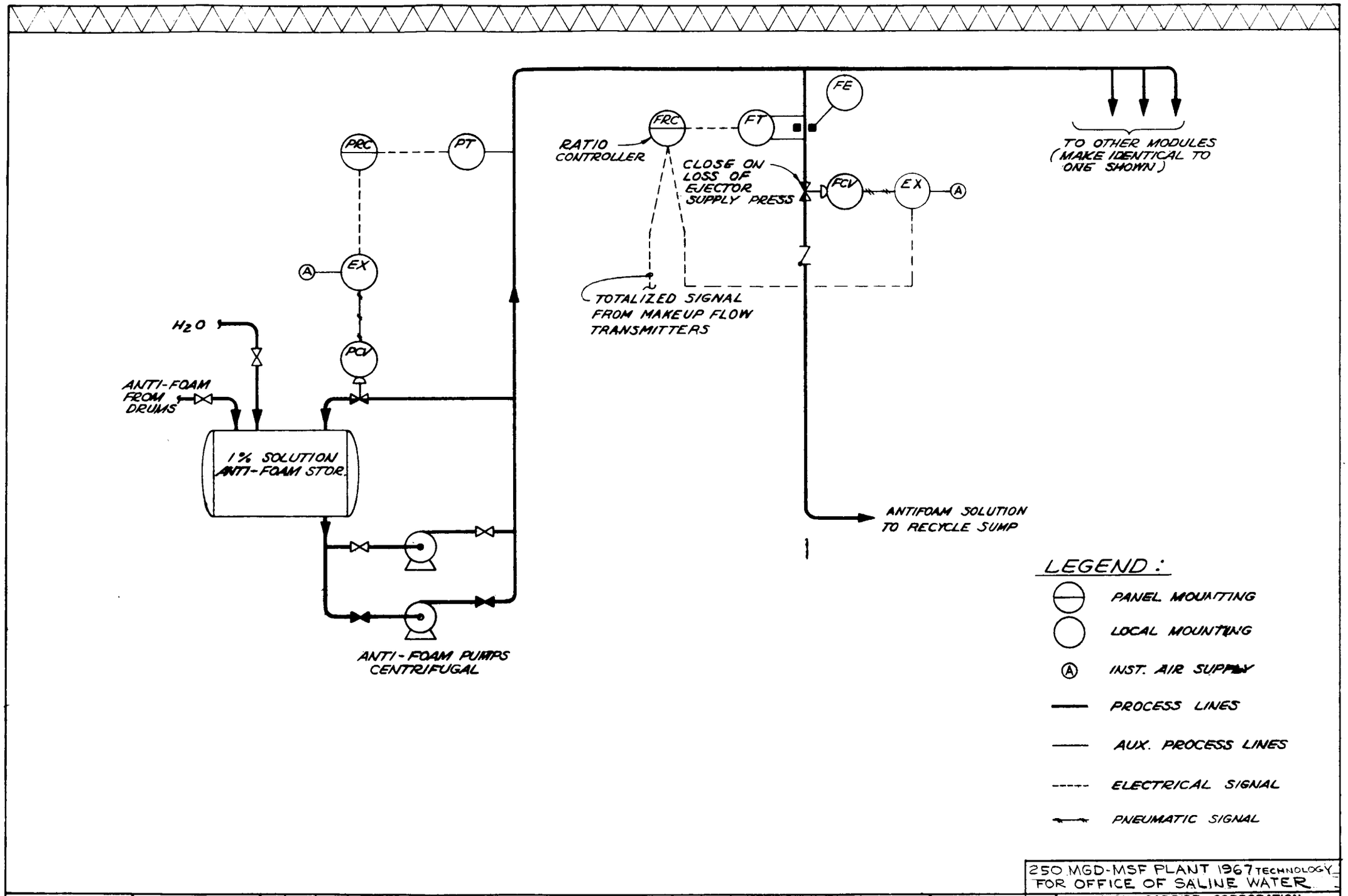

250 MGD-MSF PLANT 1967 TECHNOLOGY FOR OFFICE OF SALINE WATER

NO	BY	APPD	DATE	DESCRIPTION
1	SWF	DJJ	2/3/68	CHANGED TITLE
0	HC	—	—	

REVISIONS

SQUAD CHECK: CIVIL, MECH, ELEC, INST, MACH

REFERENCES: A-I-3478721

E.S.O. NO. M34787

CHARGE

B.M. NO. I-34787-3

SCALE NONE

		DATE
DESIGN BY	S.W.F.	8/30/67
DRAWN BY	H.F.C.	8/30/67
CHECKED BY	DJJ	9/14/67
APPROVAL: DEPT	DJJ	9/14/67
OPER		
DIV	DJJ/[illegible]	9/19/67
SAFETY		

UNION CARBIDE CORPORATION
NUCLEAR DIVISION
OAK RIDGE GASEOUS DIFFUSION PLANT

INSTRUMENT APPLICATION DIAGRAM SEA WATER MAKEUP ANTI-FOAM ADDITION SYS.

BLDG NO

LOCATION

C-I-34787A3

REV. 1

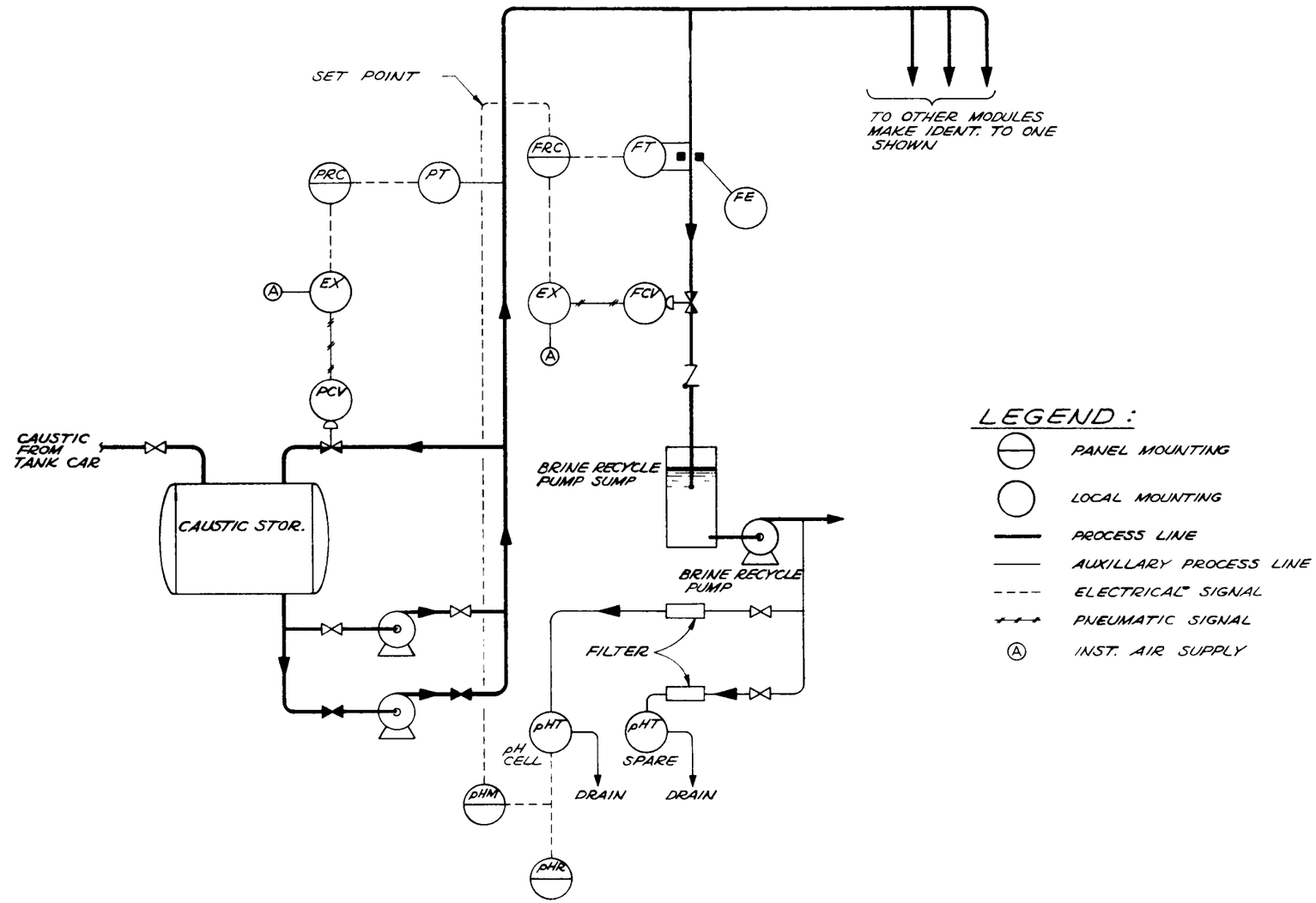

250 MGD-MSF PLANT 1967 TECHNOLOGY
FOR OFFICE OF SALINE WATER

NO	BY	APPD	DATE	DESCRIPTION
1	SWF	DJJ	3/4/68	CHANGED TITLE
C	HC	—	—	

REVISIONS

CIVIL	MECH	ELEC	INST	MACH
	JGB 9-14-67	EHM 9-14-67		

SQUAD CHECK

REFERENCES: A-I-3478721

E.S.O. NO M34787

CHARGE

B.M. NO I-34787-4

		DATE
SCALE: NONE		
DESIGN BY S. V. + F.		8/30/67
DRAWN BY H.F.C.		8/30/67
CHECKED BY B JJ		9/14/67
APPROVAL	DEPT DJJ	9/14/67
	OPER	
	DIV DJJ/AJT	9/14/67
	SAFETY	

UNION CARBIDE CORPORATION
NUCLEAR DIVISION
OAK RIDGE GASEOUS DIFFUSION PLANT

INSTRUMENT APPLICATION DIAGRAM SEA WATER MAKEUP CAUSTIC ADDITION SYSTEM

BLDG NO
LOCATION

C-I-34787A4

REV. 1

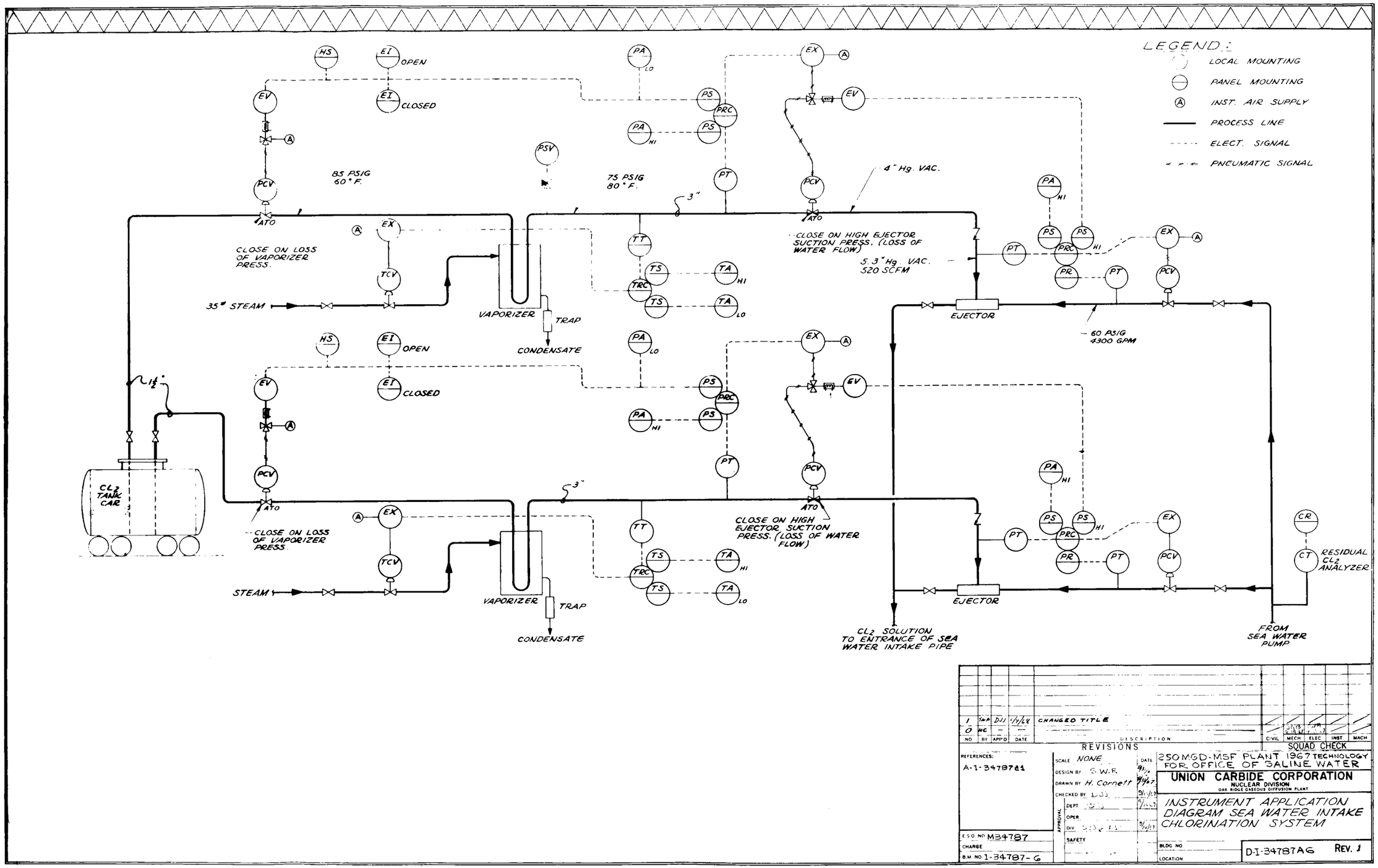

NO	BY	APP'D	DATE	DESCRIPTION	CIVIL	MECH	ELEC	INST	MACH
1	SMA	DJJ	1/4/68	CHANGED TITLE					
0	HC	—	—						

REVISIONS — SQUAD CHECK

REFERENCES: A-1-3478781

SCALE NONE
DESIGN BY G.W.F.
DRAWN BY H. Cornett
CHECKED BY D.J.J.
APPROVAL: DEPT, OPER, DIV D.J.J. & E.J., SAFETY

ESO NO M34787
CHARGE
B.M. NO 1-34787-6

250 MGD-MSF PLANT 1967 TECHNOLOGY FOR OFFICE OF SALINE WATER

UNION CARBIDE CORPORATION
NUCLEAR DIVISION
OAK RIDGE GASEOUS DIFFUSION PLANT

INSTRUMENT APPLICATION DIAGRAM SEA WATER INTAKE CHLORINATION SYSTEM

BLDG. NO
LOCATION

D-I-34787A6 REV. 1

STAGE NO.	1	5	10	15	20	25	30	35	40	45	48	49	50
PRESSURE, PSIA	26.96	21.57	16.10	11.83	8.54	6.05	4.20	2.85	1.88	1.20	.916	.821	.677
BRINE TEMP, °F	246.95	234.73	219.47	204.20	188.94	173.67	158.41	143.14	127.88	112.61	103.45	97.63	91.80

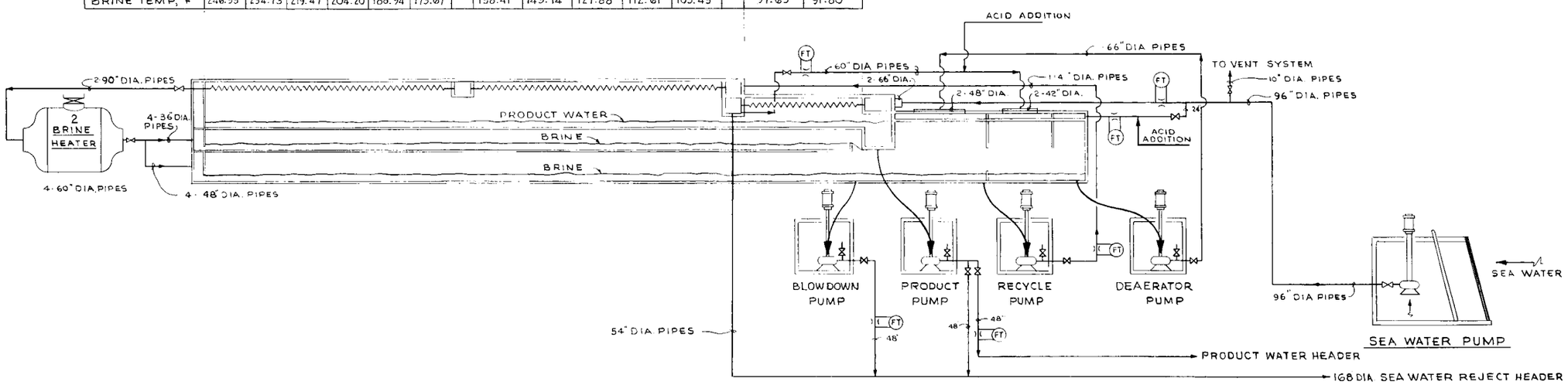

FLOW SHEET

ONE 62.5 TRAIN - 4 REQ'D

SEA WATER PUMP 148,000 GPM @ 57' HD.
RECYCLE PUMP 302,000 GPM @ 188' HD.
DEAERATOR PUMP 84,200 GPM @ 24' HD.
PRODUCT PUMP 43,400 GPM @ 107' HD.
BLOWDOWN PUMP 41,300 GPM 40' HD.
VENT PUMP 3200 GPM @ 45' HD

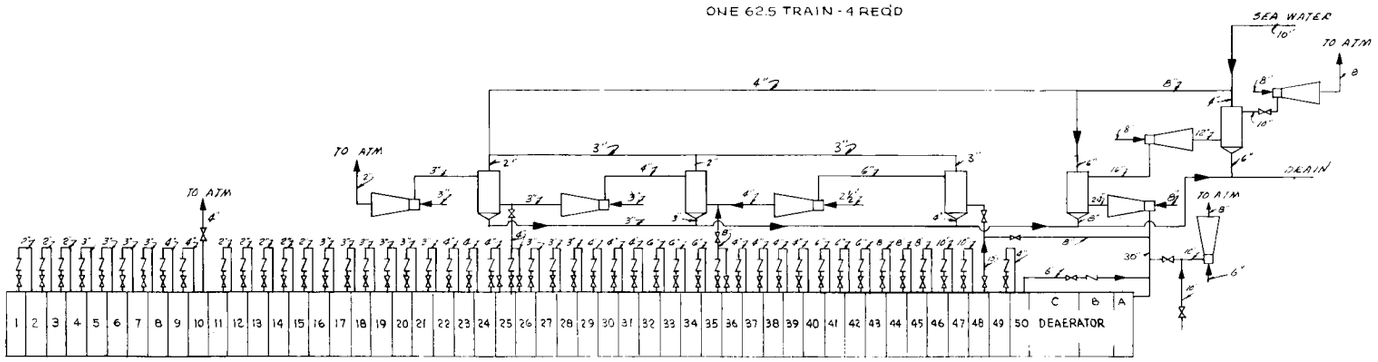

VENT SYSTEM

ONE 62.5 TRAIN - 4 REQ'D

NO.	BY	APP'D	DATE	DESCRIPTION
2				REVISED VENT SYSTEM - PUMP HEAD
1			2-27-67	STAGE PRESSURE & BRINE TEMP. & TITLE CHANGED
0			10-5-67	

REVISIONS

SQUAD CHECK: CIVIL, MECH, ELEC, INST, MACH.

REFERENCES: AP 34787 #1

SCALE NONE
DESIGN BY J.G.B. 9-28
DRAWN BY M. MEOVED 9-22
CHECKED BY
APPROVAL: DEPT. DIV. OPER. SAFETY

E.S.O. NO. M-34787
CHARGE
B.M. NO. P-34787-1

STUDY OF LARGE MSF PLANT FOR OFFICE OF SALINE WATER

UNION CARBIDE CORPORATION
NUCLEAR DIVISION
OAK RIDGE GASEOUS DIFFUSION PLANT

250 MGD MSF PLANT
1967 TECHNOLOGY
FLOW SHEET

BLDG. NO.
LOCATION

E-P-34787A REV. 2

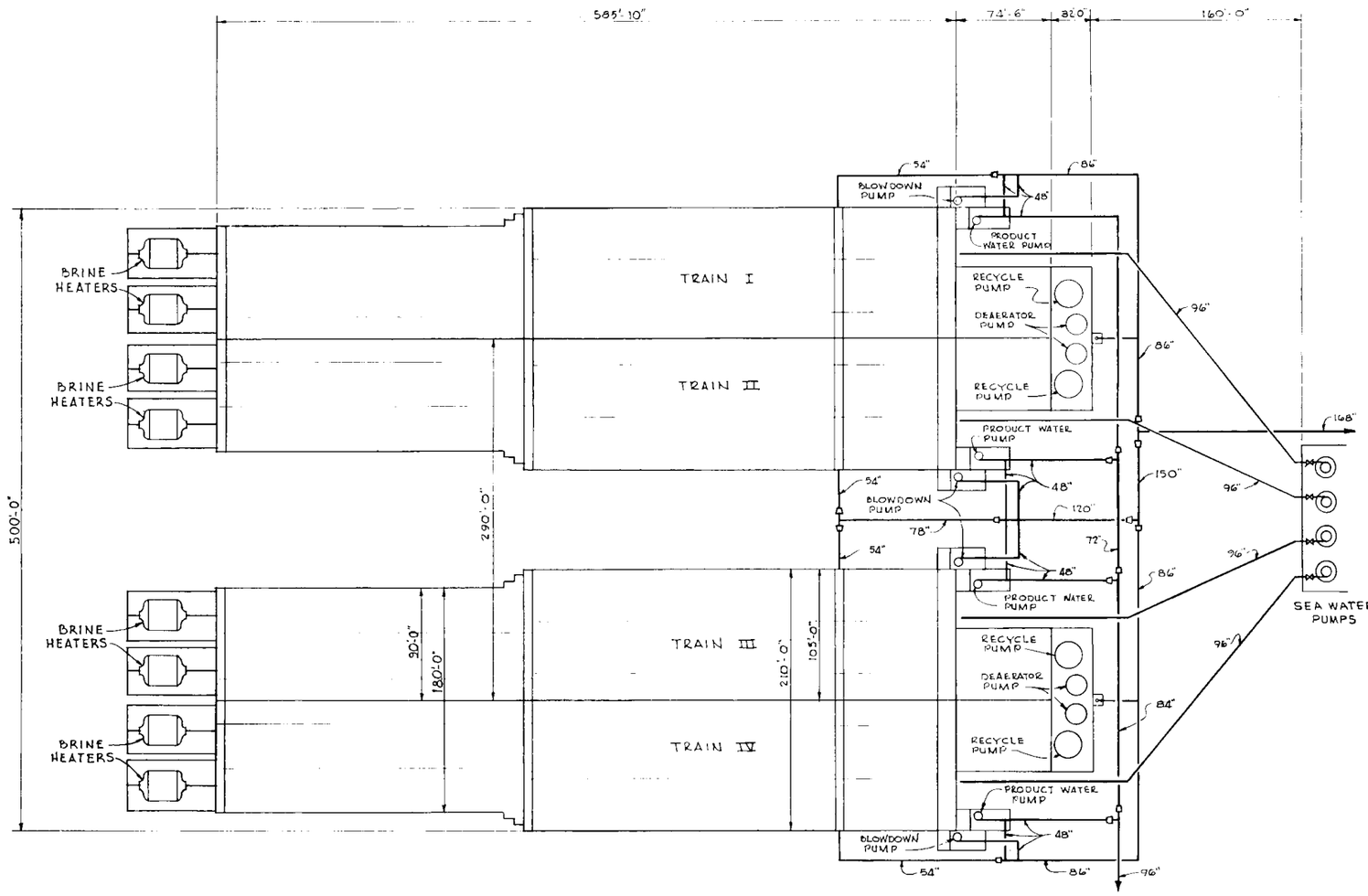

PLAN

SCALE: 40' = 1"

NO.	BY	APP'D	DATE	DESCRIPTION
2				REVISED PLANT LENGTH
1				PLANT LENGTH & TITLE CHANGED
0	TM		10-5-67	

REVISIONS

SQUAD CHECK

REFERENCED: A.P. 34787 I

SCALE	40' = 1"	67 DATE
DESIGN BY	J.G.B.	9-22
DRAWN BY	T.L.M.	9-22
CHECKED BY		10-5
APPROVAL: DEPT.		10-5
OPER.		
DIV.		10/5/67
SAFETY		

E.S.O. NO. M-34787-01

CHARGE

B.M. NO. P-34787-1

STUDY OF LARGE MSF PLANT FOR OFFICE OF SALINE WATER

UNION CARBIDE CORPORATION
NUCLEAR DIVISION
OAK RIDGE GASEOUS DIFFUSION PLANT

250 MGD MSF PLANT
1967 TECHNOLOGY
PLANT LOCATION

BLDG. NO.

LOCATION

E-P-34787-B REV. 2

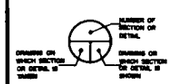

SECTION & DETAIL KEY

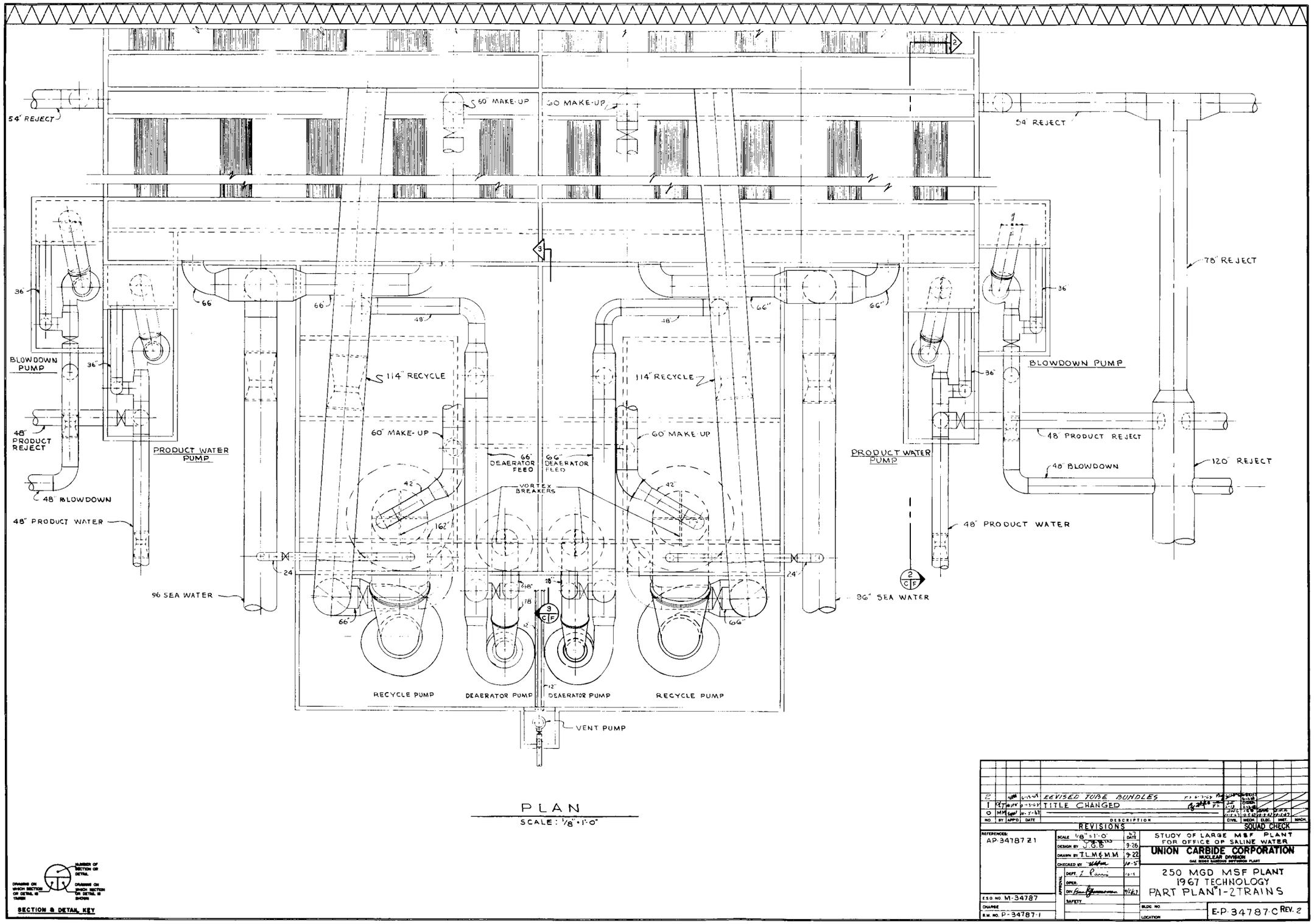
54" REJECT
60" MAKE-UP
60" MAKE-UP
54" REJECT
78" REJECT
36"
66
66"
48"
66"
66"
48"
36"
BLOWDOWN PUMP
36"
114" RECYCLE
114" RECYCLE
36"
BLOWDOWN PUMP
48" PRODUCT REJECT
PRODUCT WATER PUMP
60" MAKE-UP
60" MAKE-UP
66" DEAERATOR FEED
66" DEAERATOR FEED
PRODUCT WATER PUMP
48" PRODUCT REJECT
48" BLOWDOWN
120" REJECT
48" BLOWDOWN
42"
42"
VORTEX BREAKERS
162"
48" PRODUCT WATER
48" PRODUCT WATER
24"
24"
96 SEA WATER
96" SEA WATER
18"
18"
18"
12"
66"
66"
3 C F
2 C F
RECYCLE PUMP
DEAERATOR PUMP
DEAERATOR PUMP
RECYCLE PUMP
VENT PUMP
PLAN
SCALE: 1/8" = 1'-0"
NUMBER OF SECTION OR DETAIL
DRAWING ON WHICH SECTION OR DETAIL IS TAKEN
DRAWING ON WHICH SECTION OR DETAIL IS SHOWN
SECTION & DETAIL KEY
2 REVISED TUBE BUNDLES
1 TITLE CHANGED
NO. BY APP'D DATE DESCRIPTION
REVISIONS
SQUAD CHECK
CIVIL MECH ELEC INST. MECH.
REFERENCES: AP-34787 Z1
E.S.O. NO. M-34787
CHARGE
B.M. NO. P-34787-1
SCALE 1/8" = 1'-0"
DESIGN BY J.G.B.
DRAWN BY T.L.M. & M.M.
CHECKED BY
DEPT.
OPER.
DIV.
SAFETY
APPROVAL
STUDY OF LARGE MSF PLANT
FOR OFFICE OF SALINE WATER
UNION CARBIDE CORPORATION
NUCLEAR DIVISION
OAK RIDGE GASEOUS DIFFUSION PLANT
250 MGD MSF PLANT
1967 TECHNOLOGY
PART PLANT 1-2 TRAINS
BLDG. NO.
LOCATION
E-P-34787-C REV. 2

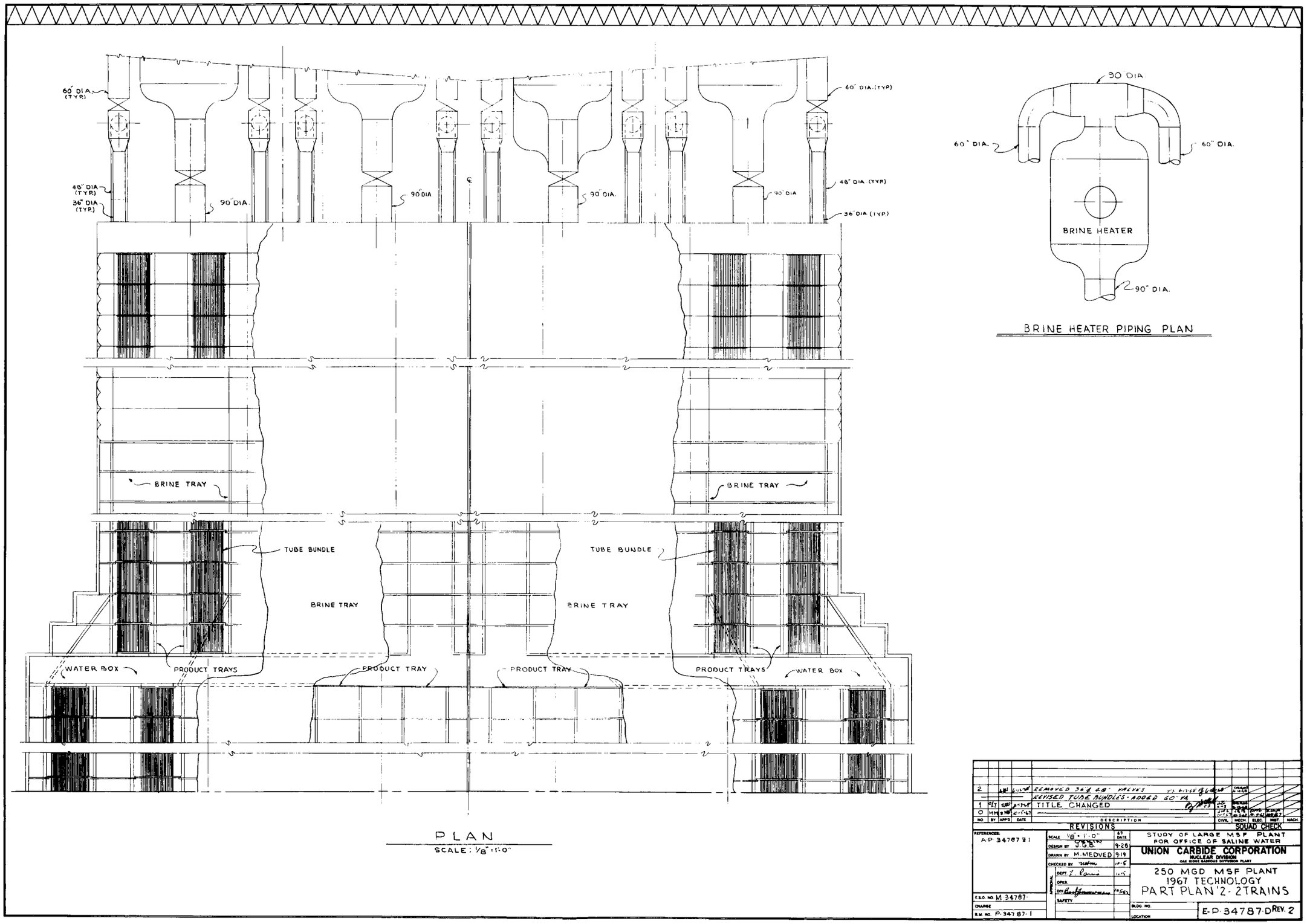
60" DIA. (TYP.)
48" DIA (TYP.)
36" DIA (TYP.)
90" DIA.
90" DIA
90" DIA.
90" DIA
60" DIA. (TYP)
48" DIA. (TYP)
36" DIA (TYP)
BRINE TRAY
BRINE TRAY
TUBE BUNDLE
TUBE BUNDLE
BRINE TRAY
BRINE TRAY
WATER BOX
PRODUCT TRAYS
PRODUCT TRAY
PRODUCT TRAY
PRODUCT TRAYS
WATER BOX
90" DIA.
60" DIA.
60" DIA.
BRINE HEATER
90" DIA.
BRINE HEATER PIPING PLAN
PLAN
SCALE: 1/8" = 1'-0"
REVISIONS
NO. BY APPD DATE DESCRIPTION
2 REMOVED 36" & 48" VALVES
REVISED TUBE BUNDLES - ADDED 60" VA
1 TITLE CHANGED
0
CIVIL MECH ELEC INST MACH
SQUAD CHECK
REFERENCES: A-P 34787 F1
SCALE 1/8" = 1'-0"
DESIGN BY J.G.B. 9-28
DRAWN BY M. MEDVED 9-19
CHECKED BY 10-5
DEPT. 10-5
OPER.
SAFETY
APPROVAL
E.S.O. NO. M 34787
CHARGE
R.M. NO. P-34787-1
STUDY OF LARGE MSF PLANT
FOR OFFICE OF SALINE WATER
UNION CARBIDE CORPORATION
NUCLEAR DIVISION
OAK RIDGE GASEOUS DIFFUSION PLANT
250 MGD MSF PLANT
1967 TECHNOLOGY
PART PLAN 2 - 2 TRAINS
BLDG. NO.
LOCATION
E-P-34787-D REV. 2

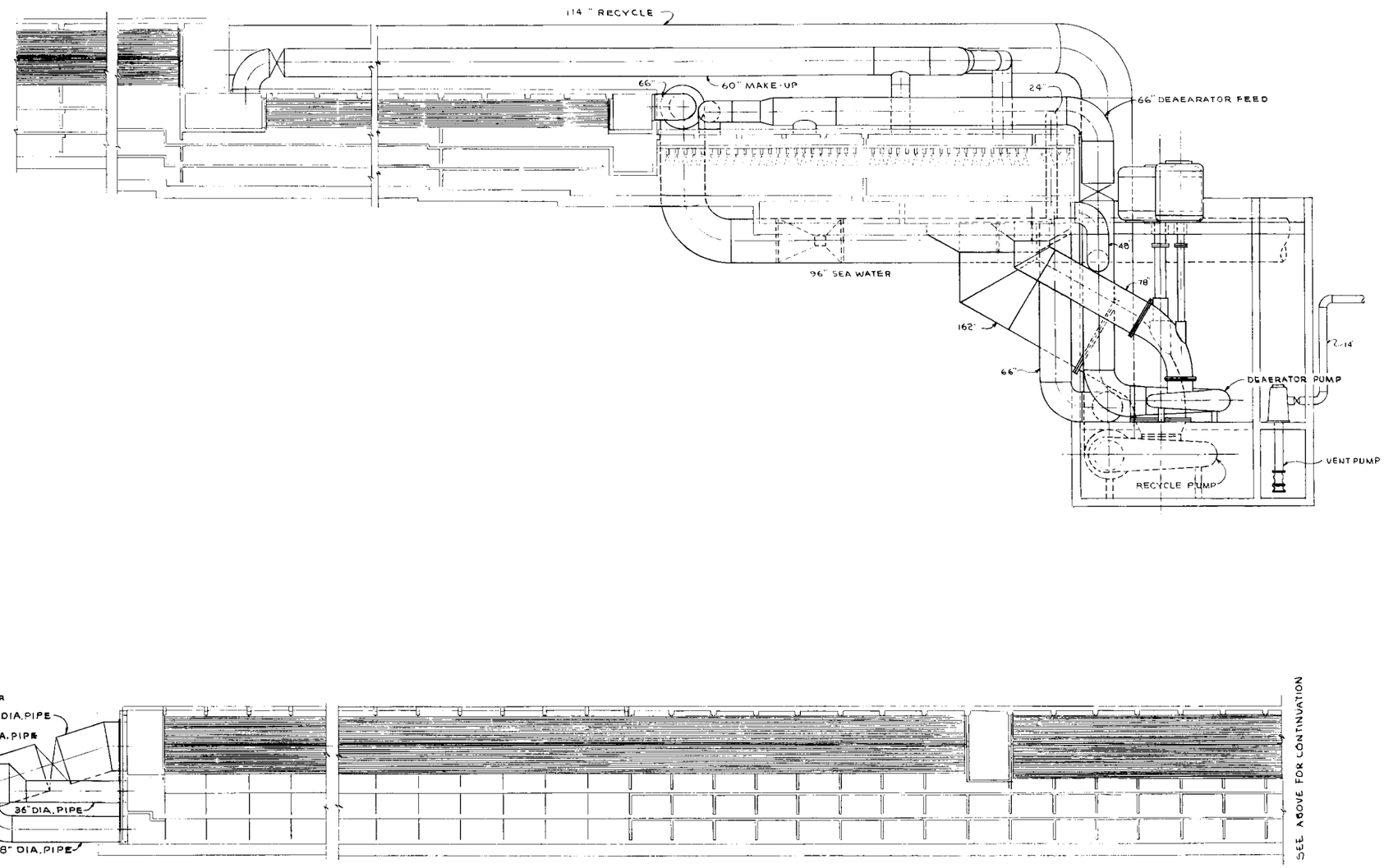

LONGITUDINAL SECTION

NO.	BY	APPD	DATE	DESCRIPTION
2			6-12-67	REVISED TUBE BUNDLES
1	RLT		3-3-67	TITLE CHANGED
0	MM		10-5-67	

REVISIONS

	CIVIL	MECH.	ELEC.	INST.	MACH.
DRAWN					
CHK'D					
APPD					

SQUAD CHECK

REFERENCES: AP 34787 Z 1

SCALE	1/8" = 1'-0"	67 DATE
DESIGN BY	J.G.B.	9-26
DRAWN BY	M.D.M.	9-22
CHECKED BY		10-5
APPROVAL DEPT		10-5
OPER.		
DIV.		10/5/67
SAFETY		

STUDY OF LARGE MSF PLANT
FOR OFFICE OF SALINE WATER

UNION CARBIDE CORPORATION
NUCLEAR DIVISION
OAK RIDGE GASEOUS DIFFUSION PLANT

250 MGD MSF PLANT
1967 TECHNOLOGY
LONGITUDINAL SECT.

E.S.O. NO. M-34787
CHARGE
B.M. NO. P-34787-1
BLDG. NO.
LOCATION

E-P 34787-E REV. 2

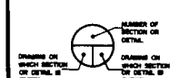

SECTION & DETAIL KEY

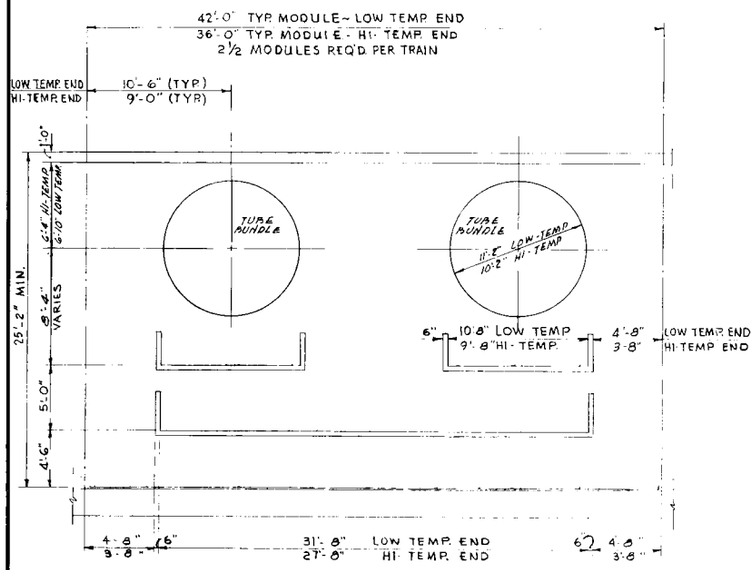

CROSS SECTION CONC. BLDG.
HEAT RECOVERY AREA
SCALE: 1/4" = 1'-0"

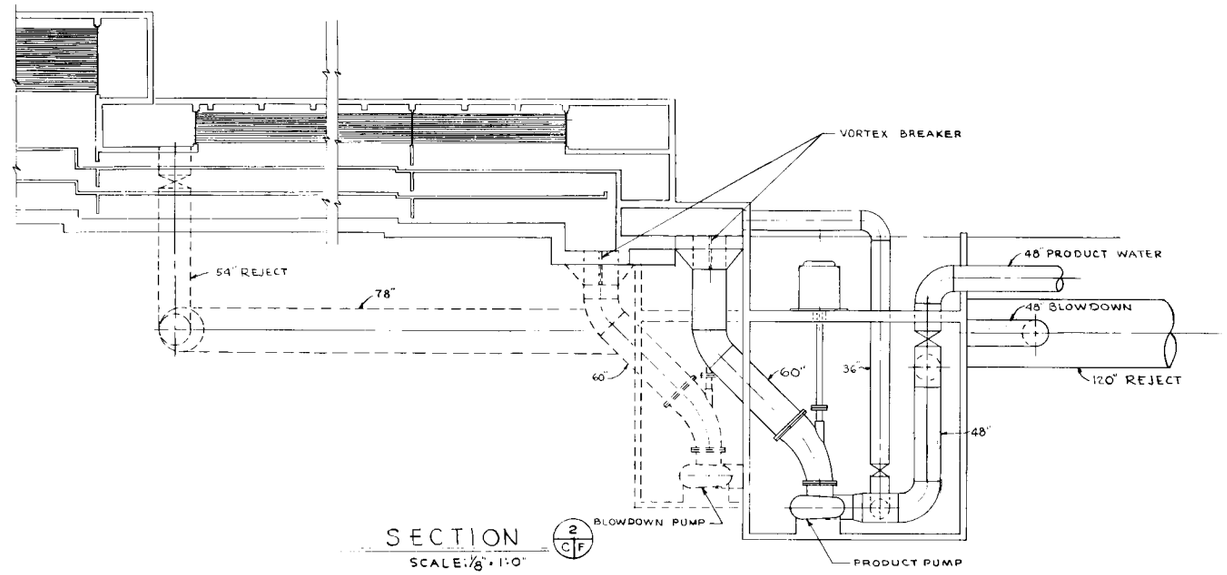

SECTION 2 C/F
SCALE: 1/8" = 1'-0"

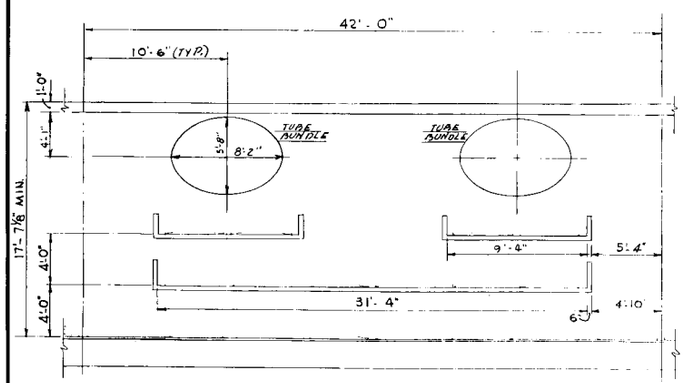

CROSS SECTION
HEAT REJECT AREA
SCALE: 1/4" = 1'-0"

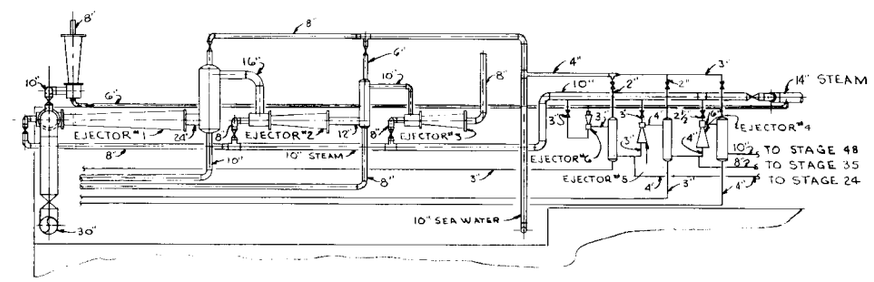

SECTION 3 C/F
SCALE 1/8" = 1'-0"

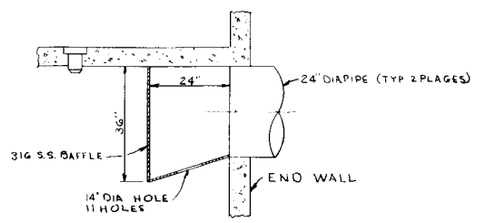

DEAERATOR VENT REMOVABLE
DETAIL
NO SCALE

SECTION & DETAIL KEY

NO.	BY	APP'D	DATE	DESCRIPTION
2				REVISED TUBE BUNDLE & VENT SYSTEM
1				TUBE BUNDLE SIZE AND TITLE CHANGED
0				

REVISIONS

CIVIL | MECH | ELEC. | INST. | MACH.
SQUAD CHECK

REFERENCES: A-P 34787 21

SCALE	NOTED	
DESIGN BY	J.G.S.	9-22
DRAWN BY	McWANEE MM	9-22
CHECKED BY		10-5
APPROVAL DEPT.		10-5
OPER.		
DIV.		11/5/67
SAFETY		

E.S.O. NO. M-34787
CHANGE
B.M. NO. P-34787-1

STUDY OF LARGE MSF PLANT
FOR OFFICE OF SALINE WATER
UNION CARBIDE CORPORATION
NUCLEAR DIVISION
OAK RIDGE GASEOUS DIFFUSION PLANT

250 MGD MSF PLANT
1967 TECHNOLOGY
SECTIONS

BLDG. NO.
LOCATION

E-P-34787-F REV. 2

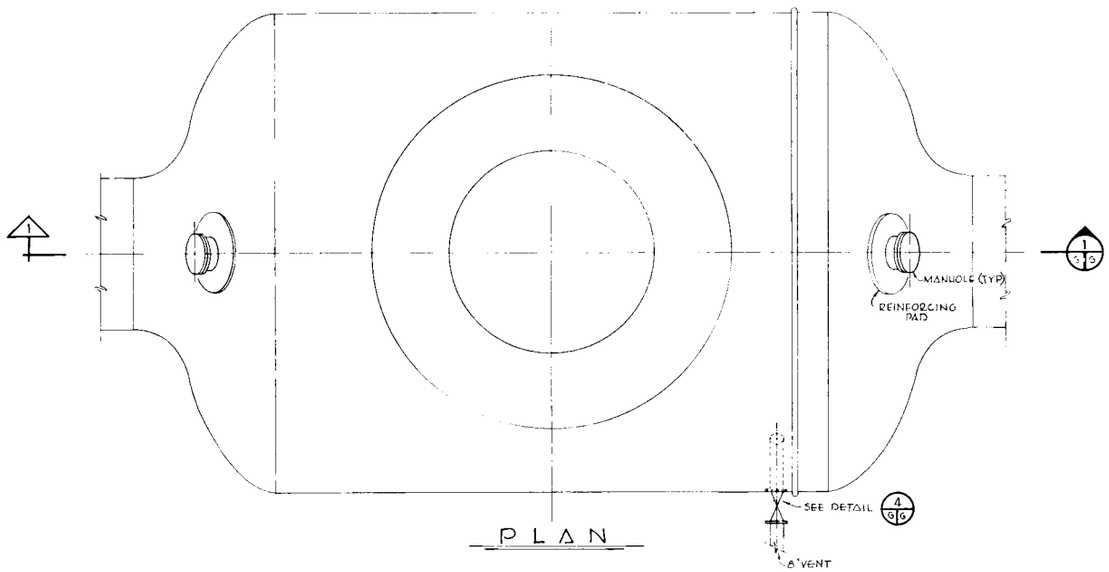

PLAN

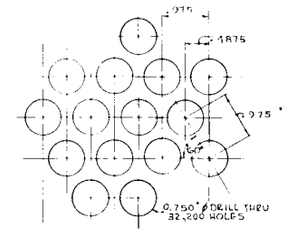

DETAIL – 5/G6

N.T.S.

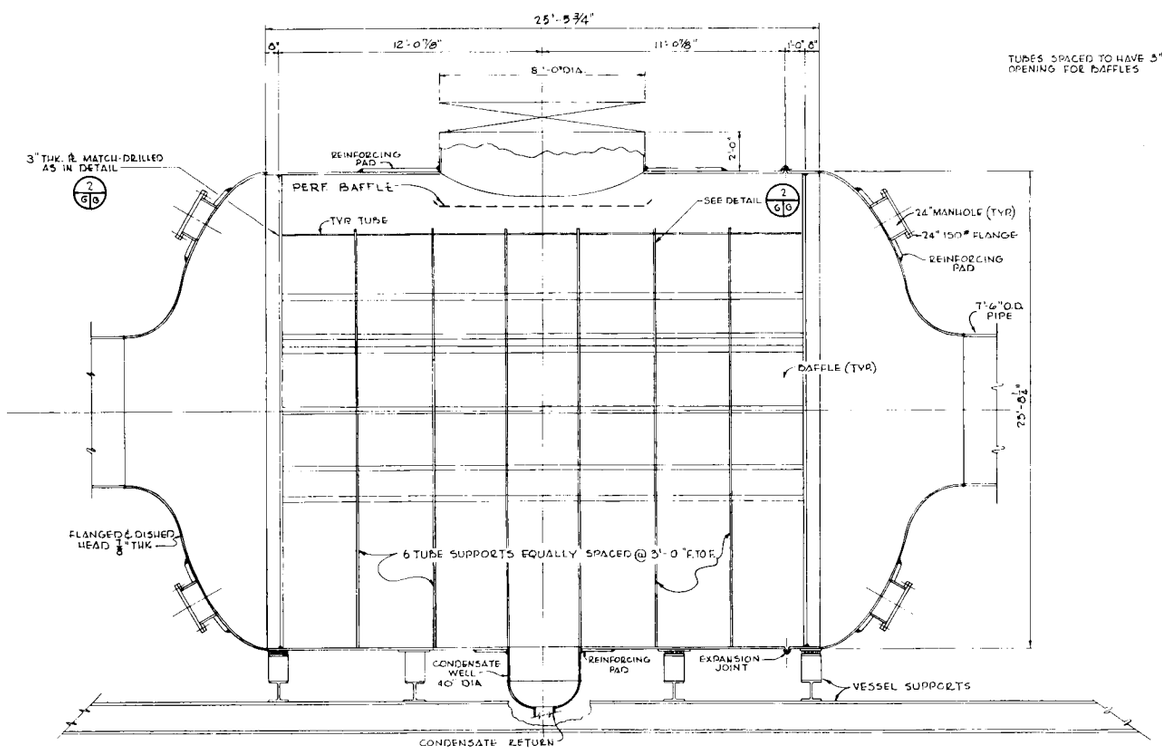

LONGITUDINAL SECTION 1/G6

3/8" = 1'-0"

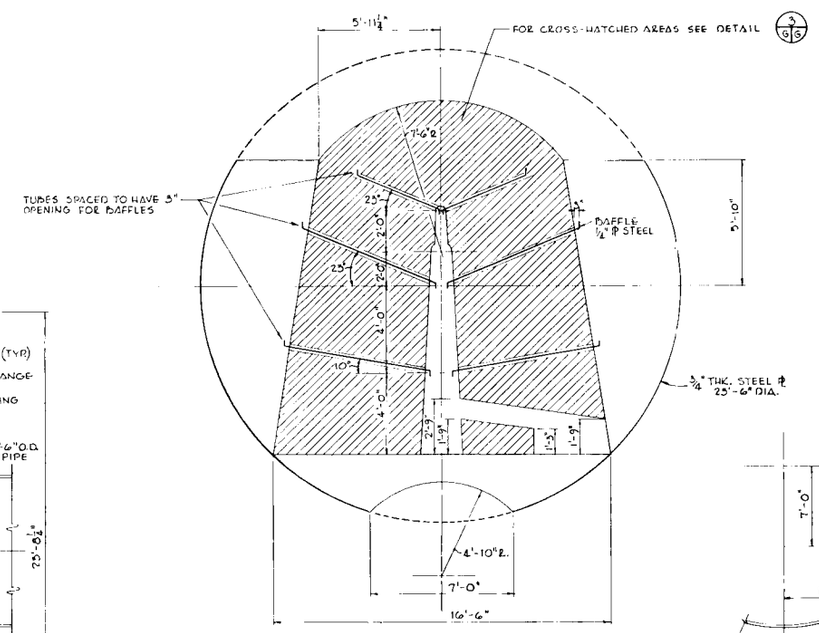

TYP. TUBE SUPPORT DETAIL – 2/G6

3/8" = 1'-0"

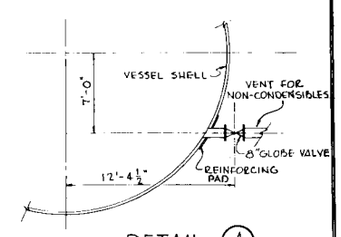

DETAIL 4/G6

N.T.S.

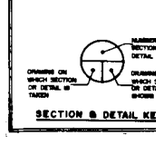

SECTION & DETAIL KEY

NO.	BY	APP'D	DATE	DESCRIPTION	CIVIL	MECH.	ELEC.	INST.	MACH.
1				REVISED BRINE HEATER LENGTH					
0	MM		10-5-67						

SQUAD CHECK

REVISIONS

REFERENCES: A-P 34787 R.1

E.R.O. NO. M 34787

CHANGE

B.M. NO. P 34787-1

		DATE
SCALE	AS SHOWN	
DESIGN BY	J. G. B	9-22
DRAWN BY	M. MEDVED	9-22
CHECKED BY		10-5
APPROVAL DEPT.		10-5
APPROVAL OPER.		
APPROVAL DIV.		10/5/67
APPROVAL SAFETY		

STUDY OF LARGE MSF PLANT FOR OFFICE OF SALINE WATER

UNION CARBIDE CORPORATION
NUCLEAR DIVISION
OAK RIDGE GASEOUS DIFFUSION PLANT

250 MGD MSF PLANT

BRINE HEATER ASSEMBLY & DETAILS

BLDG. NO.

LOCATION

E-P 34787 G REV. 1

SERVICE	NOMINAL PIPE "A"	DIM "B"	NOZZLE MATERIAL
ACID	24"	16"	HASTELLOY B
ACID	6"	4"	HASTELLOY B

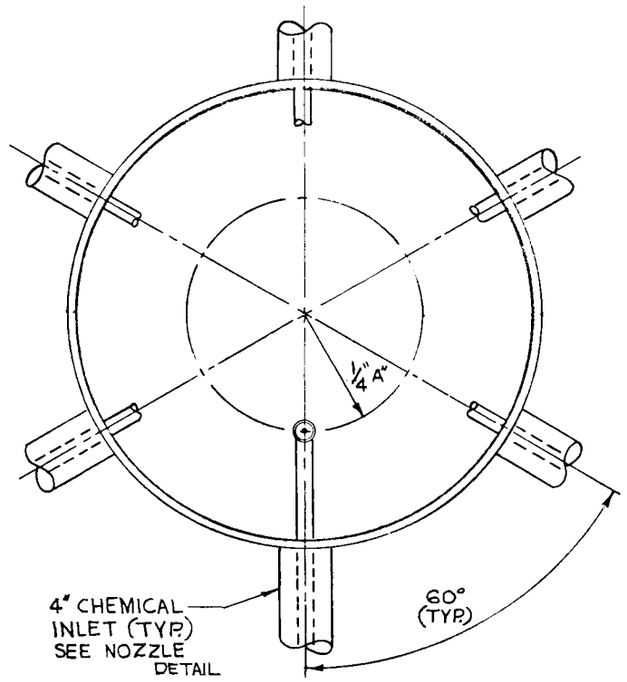

SECTION-CHEMICAL ADDITION INJECTORS

NO SCALE

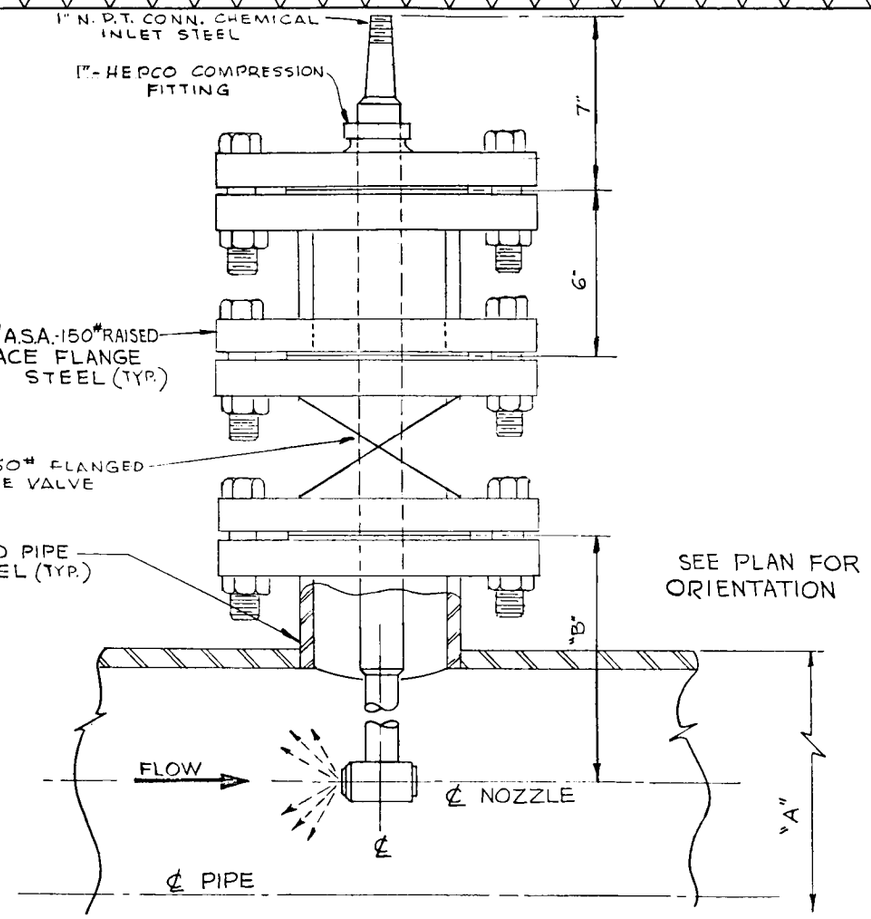

INJECTOR NOZZLE DETAIL-TYPICAL

SCALE: NONE

NOTE:

INJECTOR SHOWN IS TYPICAL. THIS UNIT IS COMMERCIALLY AVAILABLE FROM GENERAL REGULATOR CORP. MARKETED AS A TYPE 340-MA "MECHANICAL ATOMIZING DESUPER HEATER."

NO.	BY	APPD	DATE	DESCRIPTION
0	M.M.		10-5-67	

REVISIONS

SQUAD CHECK: CIVIL / MECH 10-5-67 / ELEC. / INST. 10-5-67 / MACH

REFERENCES: A-P34787 Z1

E.S.O. NO. M-34787-01

CHARGE

B.M. NO.

SCALE NOTED		DATE
DESIGN BY		9-25-67
DRAWN BY TLM		9-25-67
CHECKED BY		10-5-67
APPROVAL	DEPT.	10-5-67
	OPER.	
	DIV.	10-5-67
	SAFETY	

STUDY OF LARGE MSF PLANT FOR OFFICE OF SALINE WATER

UNION CARBIDE CORPORATION
NUCLEAR DIVISION
OAK RIDGE GASEOUS DIFFUSION PLANT

250 MGD MSF PLANT
1967 DESIGN
ACID INJECTOR DETAILS

BLDG. NO.

LOCATION

C-P34787-H

REV. 0

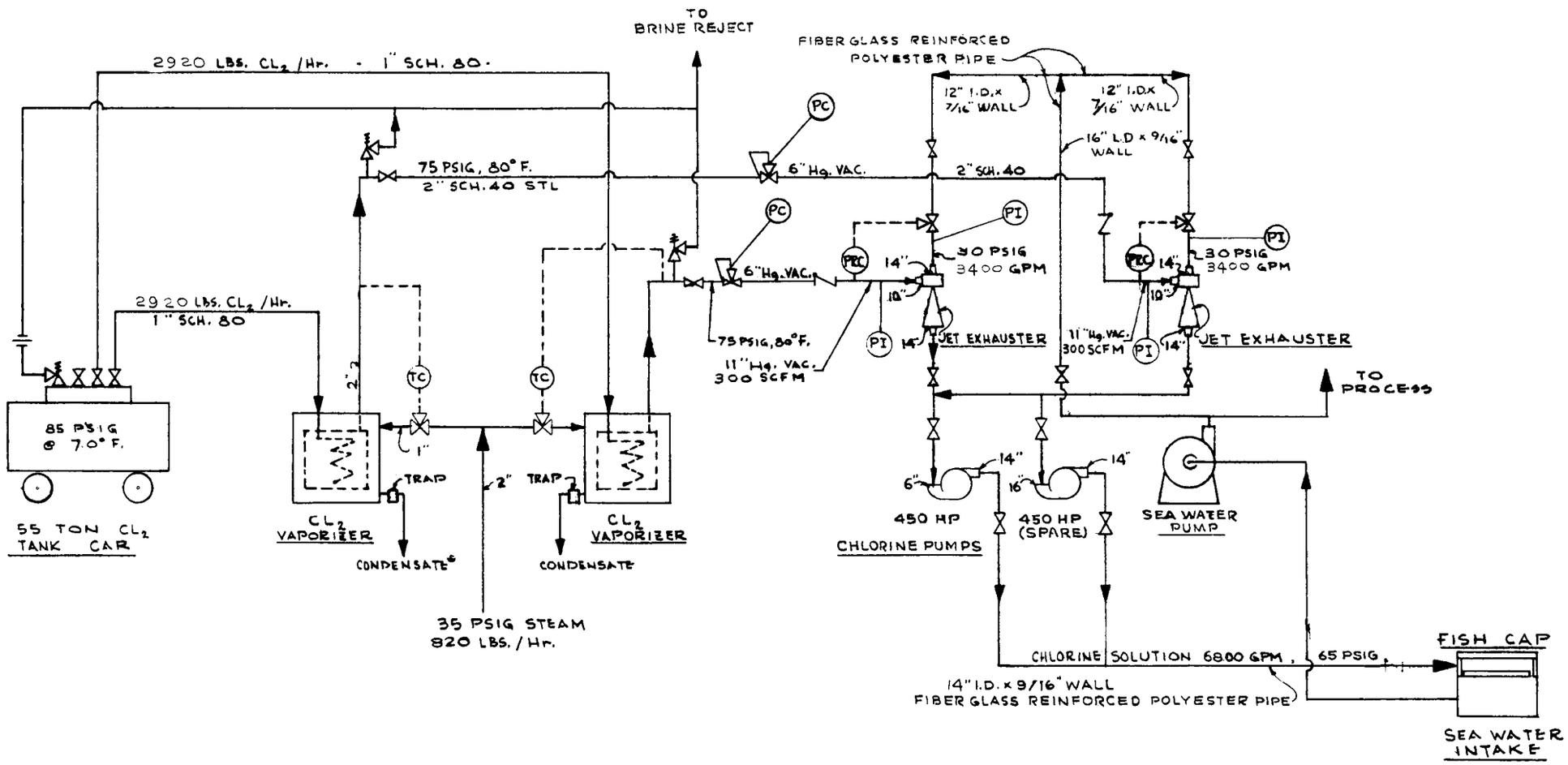

BASIS:
20 LBS. CL_2 / 10^6 LBS. SEA WATER, 24 HRS./DAY
292 X 10^6 LBS. SEA WATER/Hr.

NO.	BY	APPD.	DATE	DESCRIPTION
0	MM	[illegible]	10-5-67	

REVISIONS

SQUAD CHECK: CIVIL; MECH. JGB 10-5-67; ELEC.; INST. SWP 10-5-67; MACH.

REFERENCES: A-P34787 Z1

E.S.O. NO. M-34787-01

CHARGE

B.M. NO. P-34787-5

SCALE: NONE — DATE

DESIGN BY. JGB — 9-25-67

DRAWN BY. MEDVED — 9-25-67

CHECKED BY [illegible] — 10-5

APPROVAL: DEPT. [illegible]; OPER.; DIV. [illegible] 10/5/67; SAFETY

STUDY OF LARGE MSF PLANT FOR OFFICE OF SALINE WATER

UNION CARBIDE CORPORATION
NUCLEAR DIVISION
OAK RIDGE GASEOUS DIFFUSION PLANT

250 MGD MFS PLANT
1967 DESIGN

SEA WATER CHLORINATION

BLDG. NO.

LOCATION

C-P 34787 J — REV.

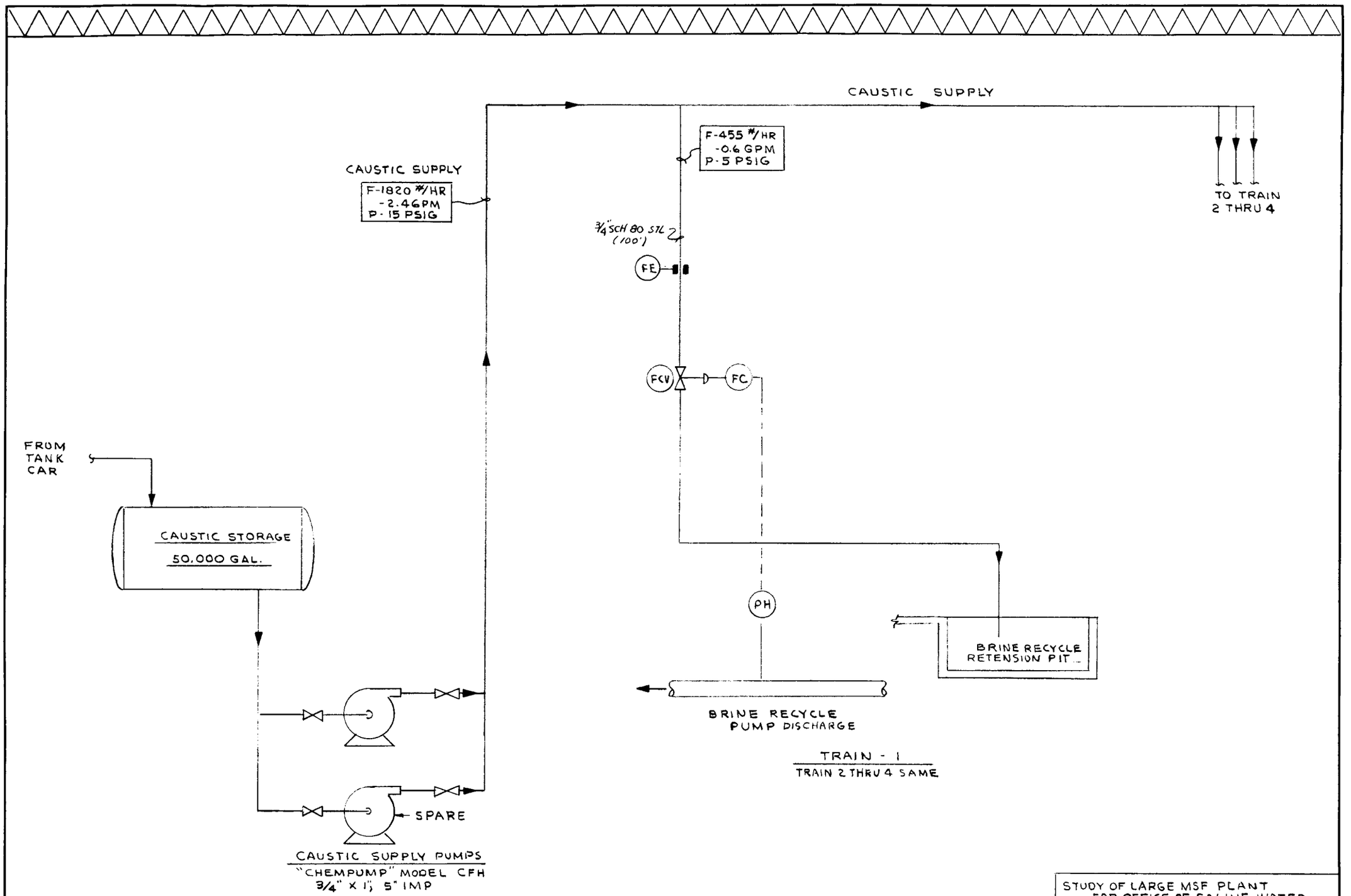

STUDY OF LARGE MSF PLANT
FOR OFFICE OF SALINE WATER

NO.	BY	APPD.	DATE	DESCRIPTION
0	MM	[illegible]	10-5-67	

REVISIONS

S & A	MECH.	ELEC.	INST.	MACH.
	JGB 10-5-67		S.G.A. 10-6-67	

SQUAD CHECK

REFERENCES: A-P-34787 Z 1
E. S. O. NO. M-34787-01
W. O. NO.
B. M. NO. P-34787-8

POWER	UTILITIES	S & P

		DATE
SCALE NONE		67
DESIGN BY JGB		9-25
DRAWN BY MEDVED		9-25
CHECKED BY [illegible]		10-5
APPROVAL	DEPT.	
	OPER.	
	DIV [illegible]	11/5/67
	USAEC	

UNION CARBIDE CORPORATION
NUCLEAR DIVISION
OAK RIDGE GASEOUS DIFFUSION PLANT

250 MGD MSF PLANT
1967 DESIGN
CAUSTIC ADDITION

BLDG. NO.
LOCATION

C-P 34787-K REV. 0

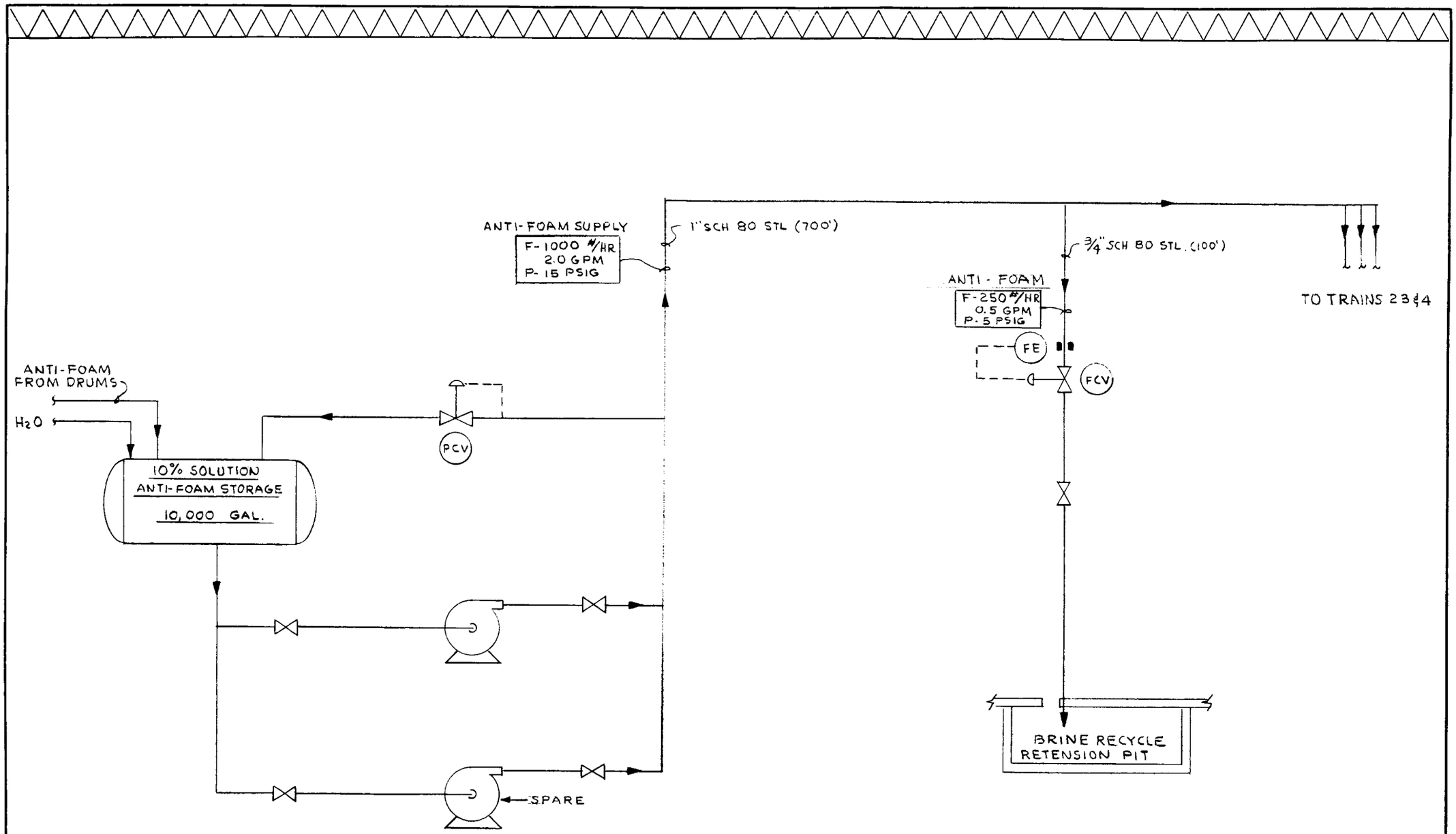

STUDY OF LARGE MSF PLANT
FOR OFFICE OF SALINE WATERS

NO.	BY	APPD.	DATE	DESCRIPTION
0	MM		10-5-67	

REVISIONS

S & A	MECH.	ELEC.	INST.	MACH.
	JGB 10-5-67		SWP 10-5-67	

SQUAD CHECK

REFERENCES: A-P 34787 Z1
E. S. O. NO. M-34787-01
W. O. NO.
B. M. NO. P-34787-7

POWER	UTILITIES	S & P

		DATE
SCALE	NONE	
DESIGN BY	JGB	9-26
DRAWN BY	MEDVED	9-26
CHECKED BY		10-5
APPROVAL DEPT.		10-5
OPER.		
DIV.		10-5-67
USAEC		

UNION CARBIDE CORPORATION
NUCLEAR DIVISION
OAK RIDGE GASEOUS DIFFUSION PLANT

250 MGD MSF PLANT
1967 DESIGN
ANTI-FOAM ADDITION, FLOW SHEET

BLDG. NO.
LOCATION

C-P 34787-L REV. 0

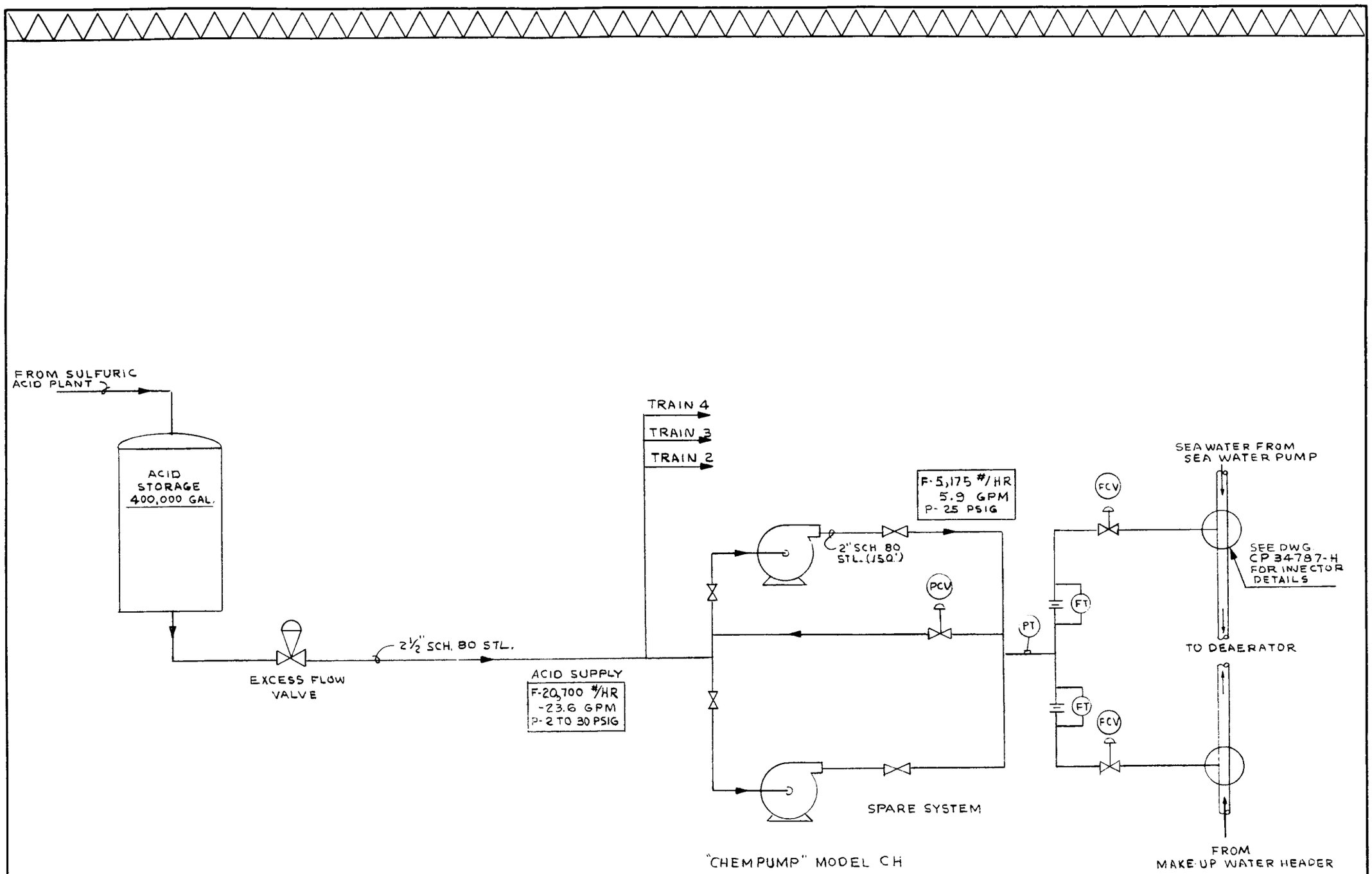

STUDY OF LARGE MSF PLANT FOR OFFICE OF SALINE WATER

UNION CARBIDE CORPORATION
NUCLEAR DIVISION
OAK RIDGE GASEOUS DIFFUSION PLANT

250 MGD MSF PLANT
1967 DESIGN
SULFURIC ACID SYSTEM, FLOW SHEET

C-P 34787-M REV. 0

NO.	BY	APPD.	DATE	DESCRIPTION
0	MM		10-5-67	

REVISIONS

S & A	MECH.	ELEC.	INST.	MACH.
	JGB 10-5-67		S.W.P. 10-5-67	

SQUAD CHECK

REFERENCES: A-P 34787 Z1

E. S. O. NO. M-34787-01

W. O. NO.

B. M. NO. P-34787-6

POWER	UTILITIES	S & P

		DATE
SCALE NONE		
DESIGN BY JGB		9-26
DRAWN BY MEDVED		9-26
CHECKED BY		10-5
APPROVAL DEPT.		
OPER.		
DIV.		
USAEC		

BLDG. NO.

LOCATION

STAGE NO	1	5	10	15	20	25	30	35	40	45	48		49	50	
$\overline{U}$	663.51	653.56	640.07	625.05	608.57	590.61	571.15	550.21	527.79	503.66	487.47		437.15	403.89	
FLASHING AREA SAFETY FACTOR	1.000	.9815	.9589	.9369	.7154	1.118	1.092	1.066	1.041	1.015	1.000		.9972	.9921	
VAPOR VELOCITY, FPS	9.29	11.01	13.71	17.20	21.72	27.60	35.28	45.30	58.43	76.28	93.74		62.38	93.08	
TRAY WIDTH, FEET	31.22	31.42	31.68	31.94	32.21	32.49	32.78	33.10	33.43	33.81	34.05		34.05	34.05	
RES TIME, SEC	1.678	1.777	1.875	1.992	2.132	2.304	2.517	2.788	3.140	3.577	3.742		12.59	7.91	
PRESSURE, PSIA	26.95	21.57	16.10	11.82	8.54	6.05	4.19	2.84	1.87	1.20	.91		.81	.67	
VAPOR FLOW LBS/HR×10⁶	1.927	1.882	1.828	1.776	1.727	1.679	1.634	1.591	1.549	1.509	1.486		2.814	2.213	
BRINE FLOW LBS/HR × 10⁶	622.6	615.0	605.7	596.7	588.0	579.5	571.2	563.2	555.4	547.7	543.3		540.5	537.7	
PRODUCT FLOW, LBS/HRS × 10⁶	1.927	9.525	18.77	27.75	36.49	44.98	53.24	61.28	69.12	76.74	81.23		84.04	86.25	
BRINE TEMP, °F	246.95	234.73	219.47	204.20	188.94	173.67	158.41	143.14	127.88	112.61	103.45		97.63	91.80	

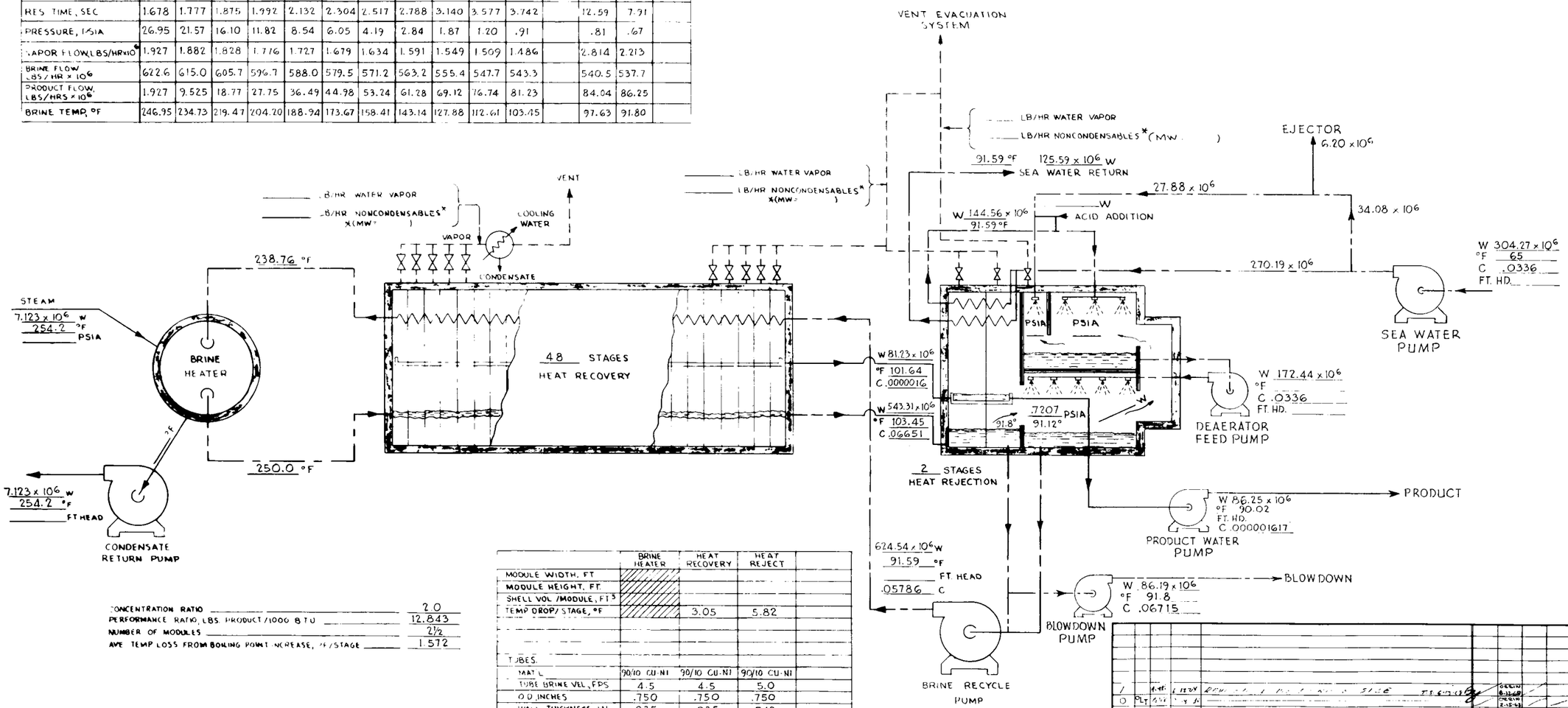

CONCENTRATION RATIO	2.0
PERFORMANCE RATIO, LBS. PRODUCT/1000 BTU	12.843
NUMBER OF MODULES	2½
AVE TEMP LOSS FROM BOILING POINT INCREASE, °F/STAGE	1.572

	BRINE HEATER	HEAT RECOVERY	HEAT REJECT
MODULE WIDTH, FT			
MODULE HEIGHT, FT			
SHELL VOL /MODULE, FT³			
TEMP DROP/ STAGE, °F		3.05	5.82
TUBES			
MATL	90/10 CU-NI	90/10 CU-NI	90/10 CU-NI
TUBE BRINE VEL, FPS	4.5	4.5	5.0
O.D. INCHES	.750	.750	.750
WALL THICKNESS, IN	.035	.035	.049
OVERALL L	658.52	578.68	424.32
SURFACE AREA, FT²	1.1815×10⁶	2.33×10⁶	1.349×10⁶
LENGTH, FT	24.14	480.03	67.50
NUMBER	249,112	248,000	101,960
HEAD LOSS, FT			
BUNDLE WIDTH, FT		10'-8" 11'-4"	8'-9
BUNDLE HEIGHT, FT		10'-8 11'-3"	6'-2

C = WT % OF SOLIDS

W = LB / HR

BRINE

PRODUCT

VENT

NO.	BY	APP'D	DATE	DESCRIPTION	CIVIL	MECH.	ELEC	INST.	MACH
1									
0									

REVISIONS — SQUAD CHECK

REFERENCES: AP-34782 1 21

SCALE — DATE

DESIGN BY J. A. SMITH

DRAWN BY TERRY 2-14-68

CHECKED BY J. A. SMITH

APPROVAL: DEPT. T. SHAPIRO 2-15-68; OPER.; DIV. 2/15/68; SAFETY

E.S.O. NO. M 34787

CHARGE

B.M. NO.

STUDY OF LARGE MSF PLANT FOR OFFICE OF SALINE WATER

UNION CARBIDE CORPORATION
NUCLEAR DIVISION
OAK RIDGE GASEOUS DIFFUSION PLANT

250 MGD MSF PLANT
1967 TECHNOLOGY
250°F. FLOW DIAGRAM

BLDG. NO.

LOCATION

D-P34787N REV. 1

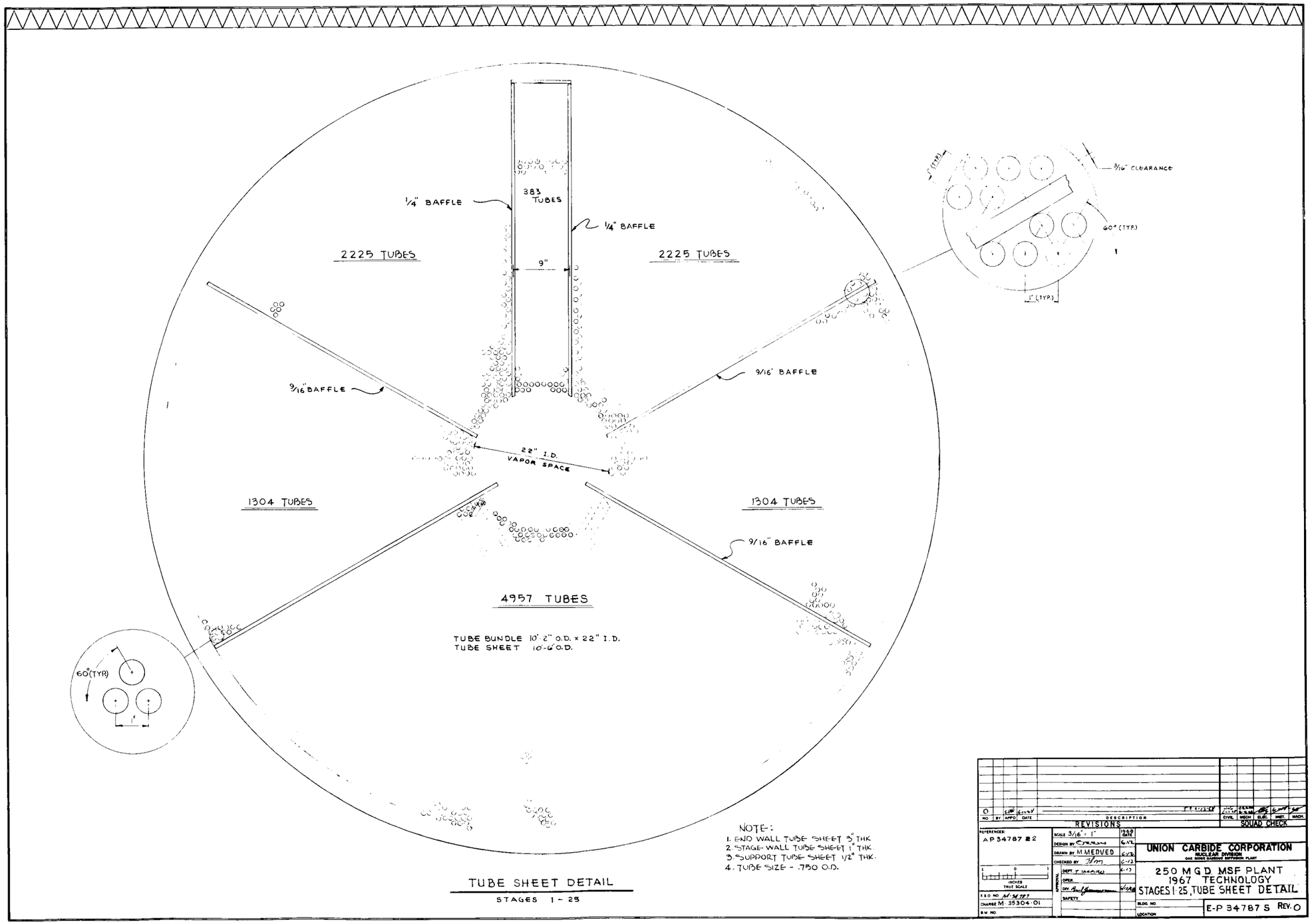
1/4" BAFFLE
383 TUBES
1/4" BAFFLE
2225 TUBES
9"
2225 TUBES
9/16" BAFFLE
9/16" BAFFLE
22" I.D. VAPOR SPACE
1304 TUBES
1304 TUBES
9/16" BAFFLE
4957 TUBES
TUBE BUNDLE 10'-2" O.D. x 22" I.D.
TUBE SHEET 10'-6" O.D.
60° (TYP)
1"
3/16" CLEARANCE
60° (TYP)
1"
1" (TYP)
1" (TYP)
NOTE:
1. END WALL TUBE SHEET 3" THK
2. STAGE WALL TUBE SHEET 1" THK
3. SUPPORT TUBE SHEET 1/2" THK.
4. TUBE SIZE - .750 O.D.
TUBE SHEET DETAIL
STAGES 1 - 25
REVISIONS
NO. BY APPD. DATE DESCRIPTION
SQUAD CHECK
CIVIL MECH. ELEC. INST. MACH.
REFERENCE: AP 34787 #2
SCALE 3/16" = 1"
DESIGN BY
DRAWN BY M. MEDVED
CHECKED BY
DEPT.
OPER.
DIV.
SAFETY
APPROVAL
INCHES TRUE SCALE
F.S.O. NO. AP-34787
CHARGE M-35304-01
B.M. NO.
UNION CARBIDE CORPORATION
NUCLEAR DIVISION
OAK RIDGE GASEOUS DIFFUSION PLANT
250 MGD MSF PLANT
1967 TECHNOLOGY
STAGES 1-25, TUBE SHEET DETAIL
BLDG. NO.
LOCATION
E-P 34787 S REV. 0

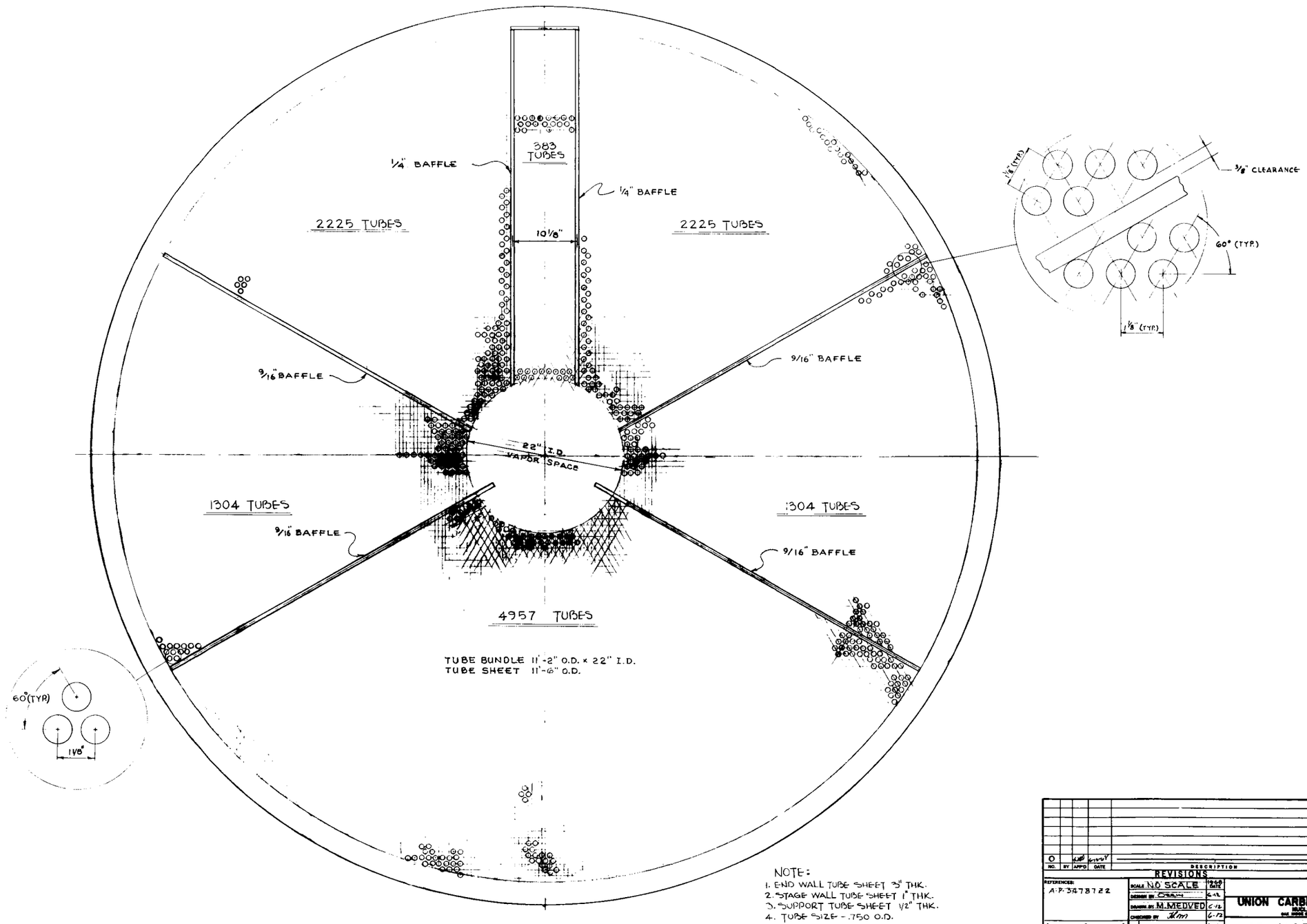

NOTE:
1. END WALL TUBE SHEET 3" THK.
2. STAGE WALL TUBE SHEET 1" THK.
3. SUPPORT TUBE SHEET 1/2" THK.
4. TUBE SIZE - .750 O.D.

TUBE SHEET DETAIL

STAGES 26 - 48

NO.	BY	APP'D	DATE	DESCRIPTION
0				

REVISIONS

REFERENCES: A-P-3478722

SCALE NO SCALE

DESIGN BY

DRAWN BY M. MEDVED

CHECKED BY

DEPT. T. SHAPIRO

OPER.

SAFETY

INCHES TRUE SCALE

E.S.D. NO. M-34717

CHANGE

B.M. NO.

UNION CARBIDE CORPORATION
NUCLEAR DIVISION
OAK RIDGE GASEOUS DIFFUSION PLANT

250 MGD MSF PLANT
1967 TECHNOLOGY
STAGES 26-48, TUBE SHEET DETAIL

DLDG. NO.

LOCATION

E-P-34787-T REV. 0

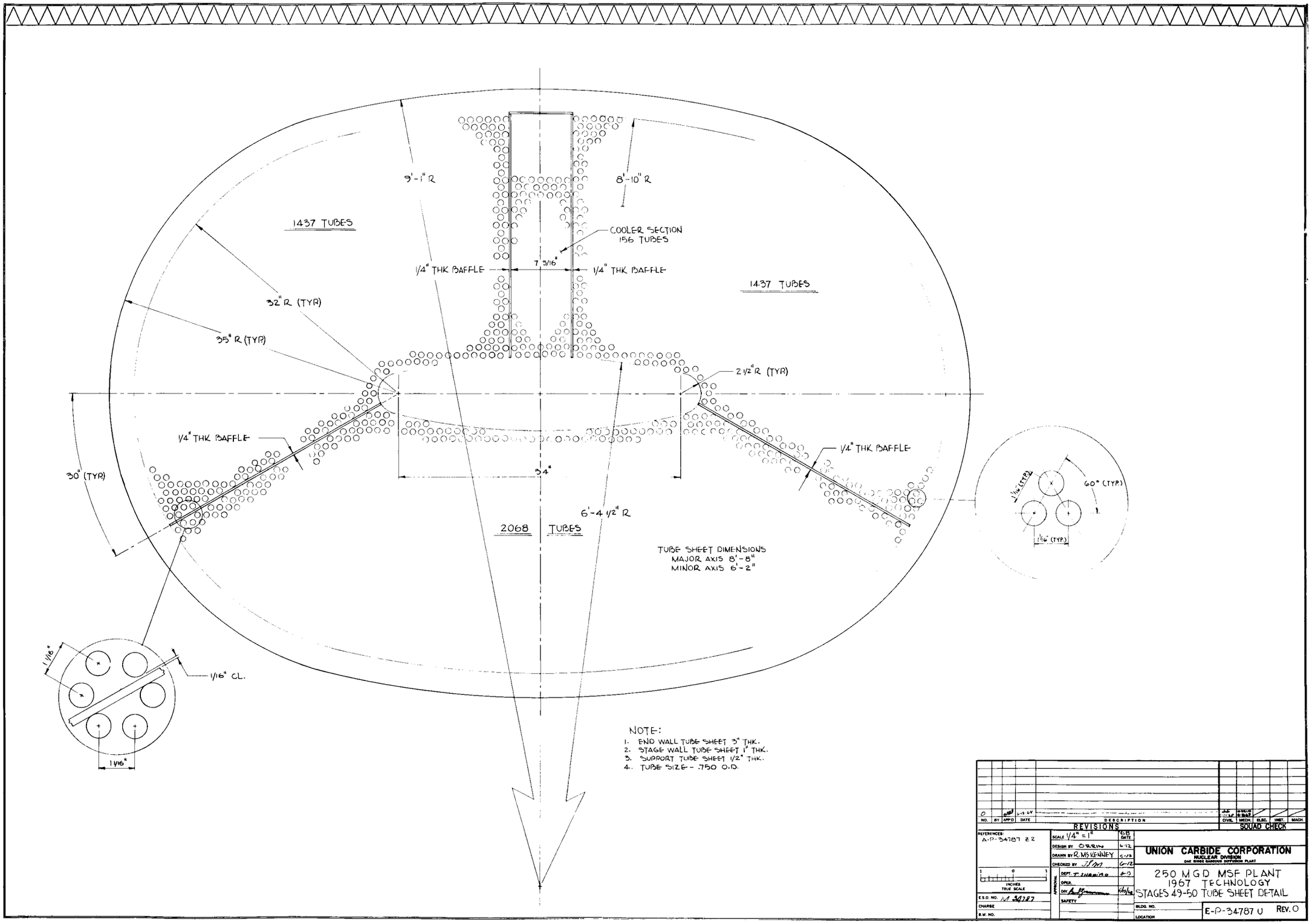

NO.	BY	APP'D	DATE	DESCRIPTION
0			6-15-67	

REVISIONS

SQUAD CHECK: CIVIL | MECH. | ELEC. | INST. | MACH.

REFERENCES: A-P-34787 & 2

SCALE 1/4" = 1"

		DATE
DESIGN BY	O.R.Ring	6-12
DRAWN BY	R. M. McKENNEY	6-12
CHECKED BY	J.J.M.	6-12
APPROVAL DEPT.	T. HAMILTON	6-13
OPER.		
DIV.		7/15/68
SAFETY		

INCHES TRUE SCALE

E.S.D. NO. M 34787

CHARGE

B.M. NO.

UNION CARBIDE CORPORATION
NUCLEAR DIVISION
OAK RIDGE GASEOUS DIFFUSION PLANT

250 MGD MSF PLANT
1967 TECHNOLOGY
STAGES 49-50 TUBE SHEET DETAIL

BLDG. NO.

LOCATION

E-P-34787 U REV. 0

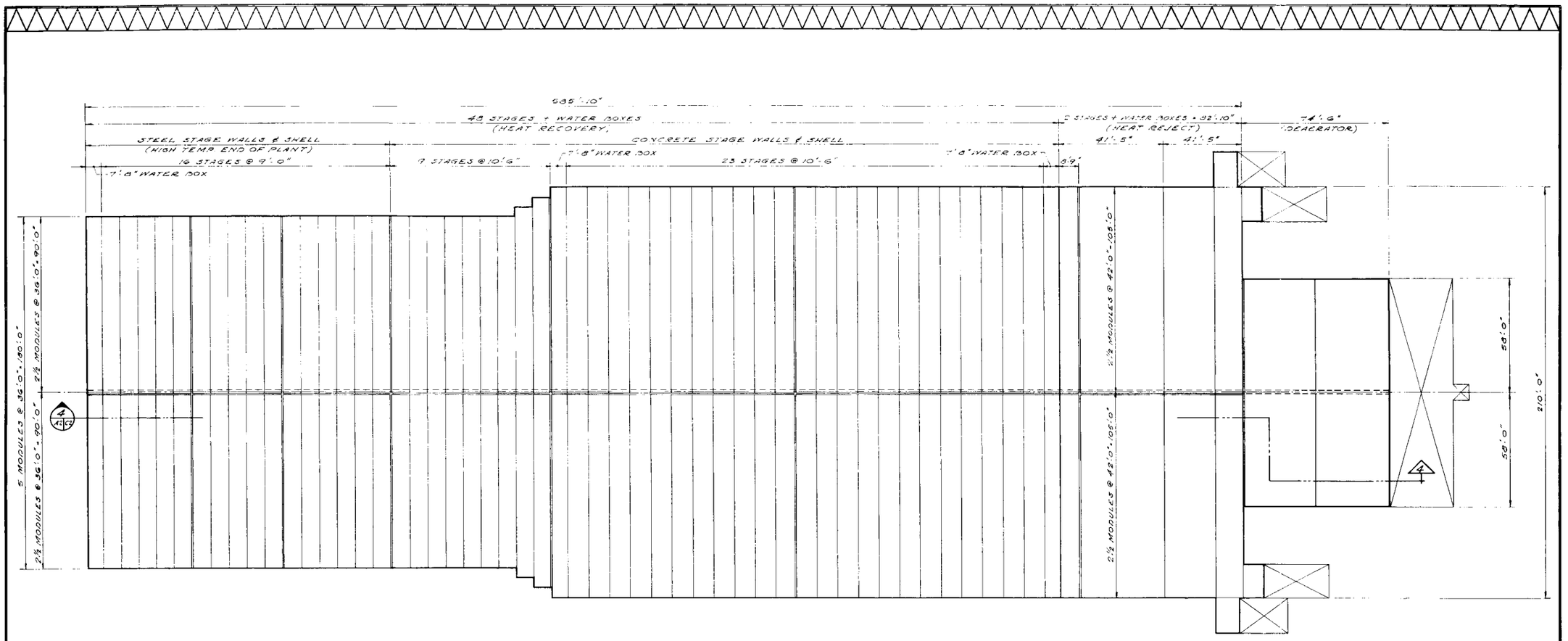

PLAN
BUILDING WITH TWO TRAINS
(FOUR TRAINS REQ'D PER PLANT)
SCALE: 1" = 20'

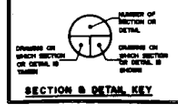

SECTION & DETAIL KEY

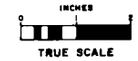

TRUE SCALE

NO.	BY	APP'D	DATE	DESCRIPTION	CIVIL	MECH.	ELEC.	INST.	MACH.
0									

REVISIONS — SQUAD CHECK

REFERENCES:

SCALE: Noted — DATE
DESIGN BY: J. N. Gregory 5-29-68
DRAWN BY: Wallace 5-29-68
CHECKED BY: JWG
APPROVAL: DEPT. Gregory 6-14-68; DIV. Paul Zimmerman 6-18-68; SAFETY

E.S.O. NO. M-34787
CHANGE
B.M. NO. S 34787-4

STUDY OF LARGE MSF PLANT FOR
OFFICE OF SALINE WATER
UNION CARBIDE CORPORATION
NUCLEAR DIVISION
OAK RIDGE GASEOUS DIFFUSION PLANT

250 MGD MSF PLANT
1967 TECHNOLOGY
WITH REVISED TUBE BUNDLE
PLAN

BLDG. NO.
LOCATION

E-S-34787A2 REV. 0

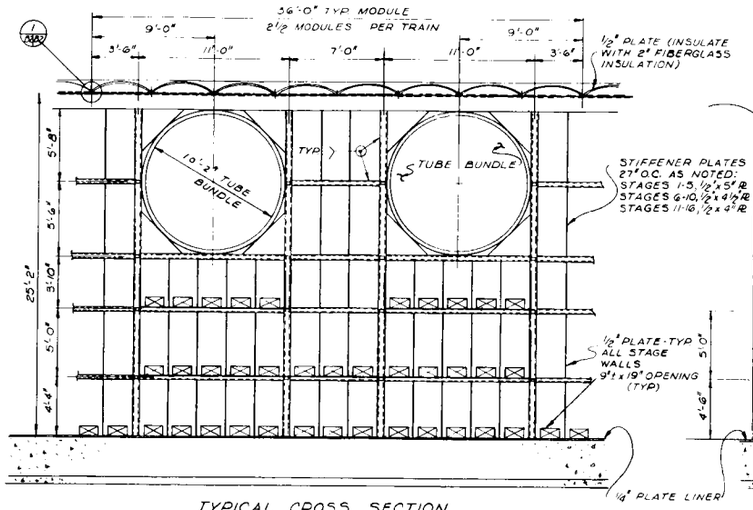

TYPICAL CROSS SECTION SHOWNING WALL FRAMING

SCALE: 1/4" = 1'-0"

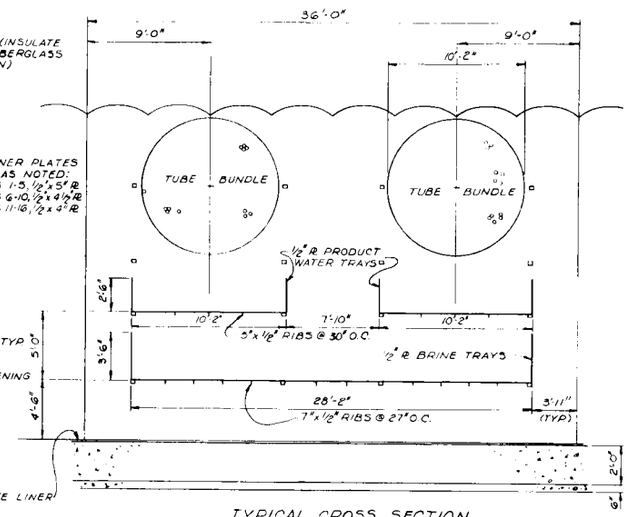

TYPICAL CROSS SECTION BETWEEN WALLS

SCALE: 1/4" = 1'-0"

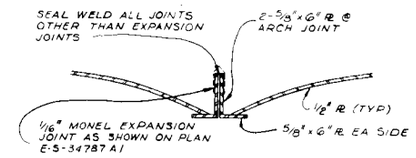

1 / B2 B2

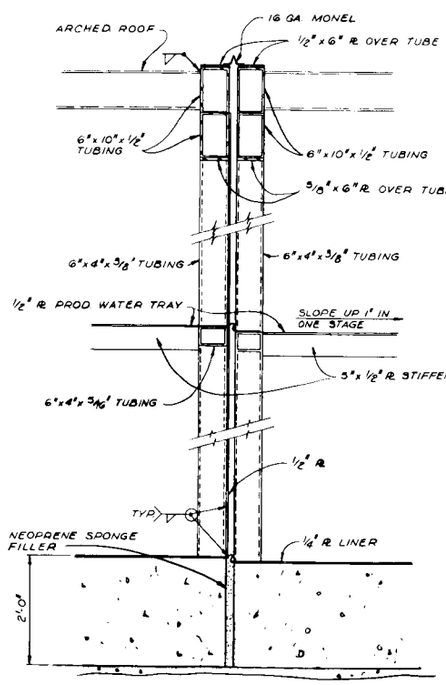

TYP. STEEL STAGEWALL @ EXP. JOINT

SCALE: 1/2" = 1'-0"

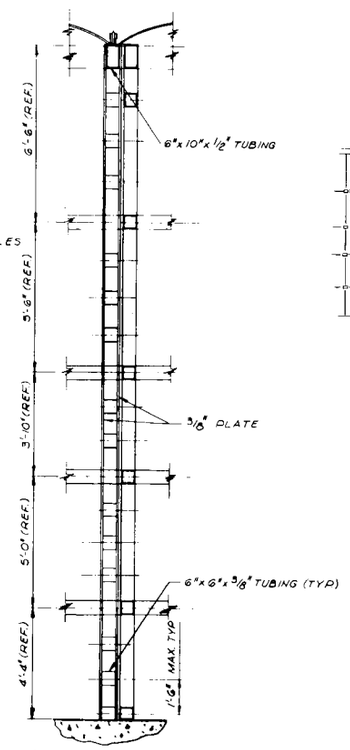

TYPICAL - SECTION MID-LONGITUDINAL WALL STRUCTURAL STEEL SHEEL

SCALE: 1/2" = 1'-0"

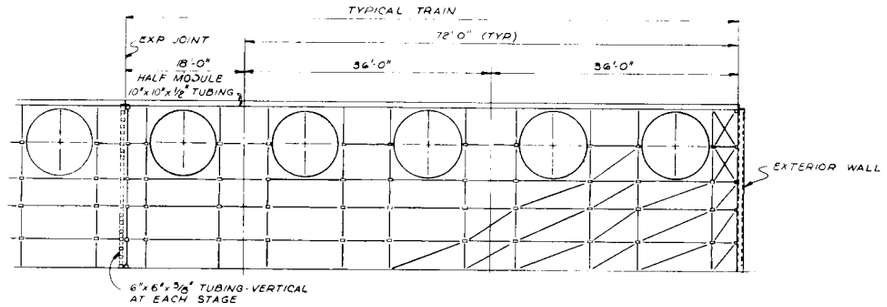

TRANSVERSE WALL MEMBERS

SCALE: 1/8" = 1'-0"

ALL DIAGONALS - 6" x 4" x 3/8 TUBING
HORIZ. MEMBERS - VARIES - SEE E-S-34787C2 AND AS SHOWN
VERT. MEMBERS - VARIES - SEE E-S-34787C2 AND AS SHOWN

NOTES:

INTERIOR PROTECTIVE COATING (APPLIED TO EITHER CONCRETE OR STEEL LINING - AS REQ'D) SHALL BE AS FOLLOWS:

- CONCRETE PRODUCT WATER TRAYS - 1/8" POLYPROPYLENE ALL SURFACES
- CONC BRINE TRAYS - 1/8" POLYPROPYLENE ALL EXTERIOR SURFACES AND TO 3" BELOW BRINE SURFACE ON INTERIOR
- CONC STAGE WALLS - 1/8" POLYPROPYLENE ALL SURFACES
- DEAERATOR EXTERIOR WALLS - LUMNITE CEMENT ON STEEL
- DEAERATOR INTERIOR WALLS - LUMNITE CEMENT ON CONCRETE
- WATER BOXES - PHENOLIC COATING ON INTERIOR STEEL SURFACE
- STEEL BRINE TRAYS AND FLOOR LINER - PHENOLIC COATING
- NO COATING REQ'D. FOR ALL OTHER CONCRETE AND STEEL SURFACE.

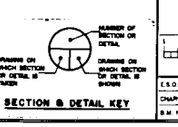

SECTION & DETAIL KEY

NO.	BY	APP'D	DATE	DESCRIPTION	CIVIL	MECH.	ELEC.	INST.	MACH.
0									

REVISIONS — SQUAD CHECK

REFERENCES:

SCALE: AS NOTED — DATE

DESIGN BY: J.W. GREGORY

DRAWN BY: C.E. HAMILTON 5-68

CHECKED BY: J.W.G.

APPROVAL: DEPT. Greg 4-17-68 — OPER. — DN Paul Gomersall 1-29-68 — SAFETY

1 0 INCHES TRUE SCALE

E.S.O. NO. M-34787-01

CHARGE

B.M. NO. S-34787-

STUDY OF LARGE MSF PLANT FOR OFFICE OF SALINE WATER

UNION CARBIDE CORPORATION
NUCLEAR DIVISION
OAK RIDGE GASEOUS DIFFUSION PLANT

250 MGD MSF PLANT
WITH REVISED TUBE BUNDLE
1967 TECHNOLOGY
TYP. STEEL SECTIONS

BLDG. NO.

LOCATION

E-S-34787B2 Rev. 0

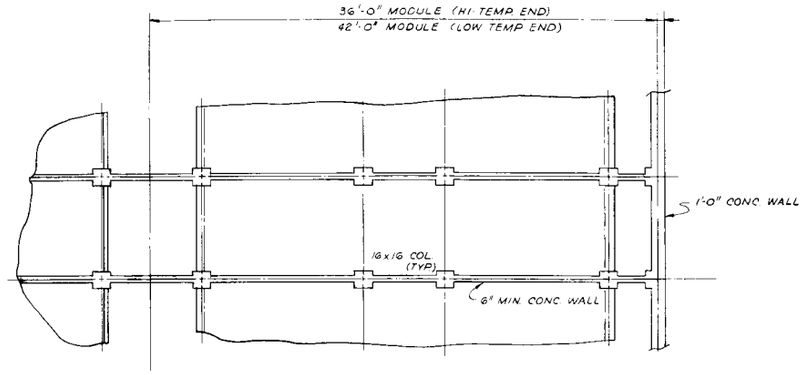

PLAN - SHOWING UPPER BRINE TRAY CONCRETE CONSTRUCTION
SCALE: 1/4"=1'-0"

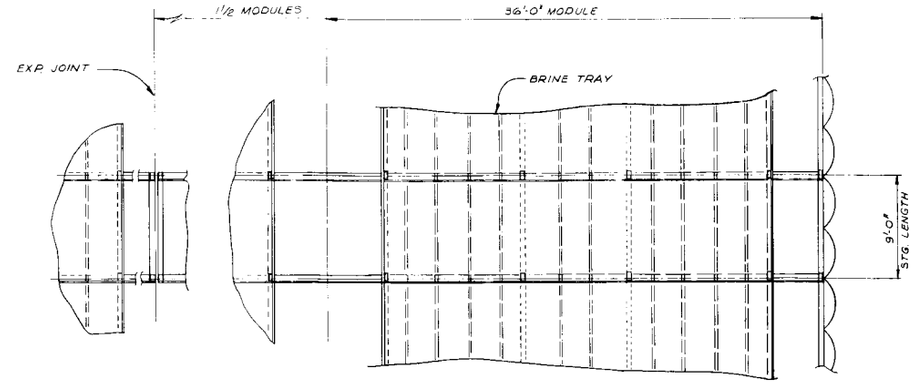

PLAN SHOWING UPPER BRINE TRAY AND TYP EXP JOINT - STEEL CONSTRUCTION
SCALE: 1/4"=1'-0"

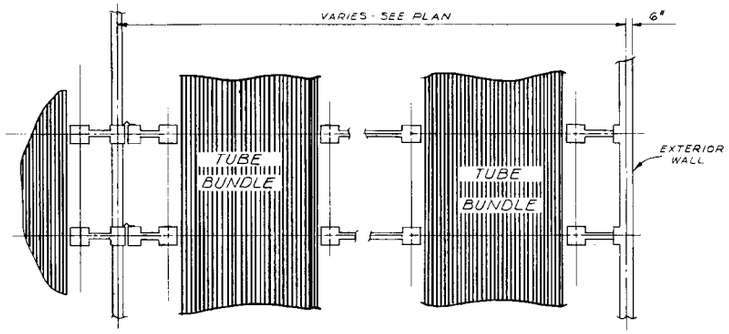

PLAN-SHOWING TUBE BUNDLES AND TYP EXP JOINT — CONCRETE CONSTRUCTION
SCALE: 1/4"=1'-0"

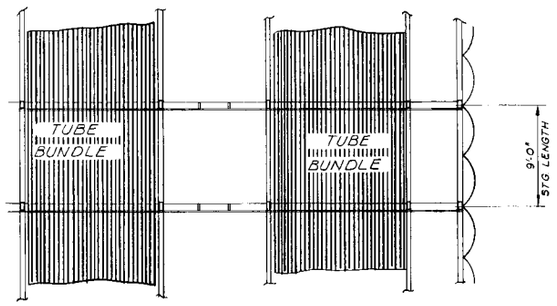

PLAN - SHOWING TUBE BUNDLES - STEEL CONSTRUCTION
SCALE: 1/4"=1'-0"

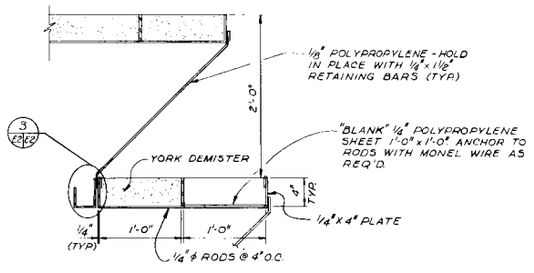

2
EA EQ
SCALE: 1 1/2"=1'-0"

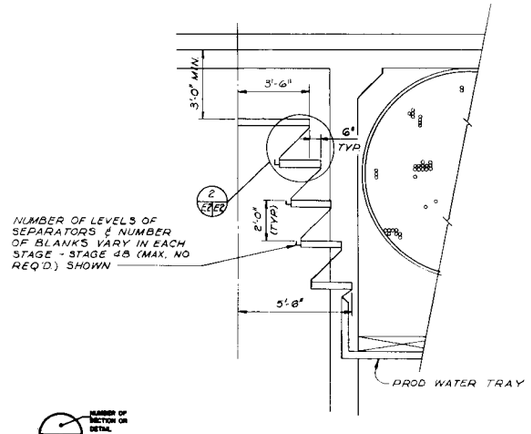

TYP ENTRAINMENT SEPARATOR DETAIL
SCALE: 3/8"=1'-0"

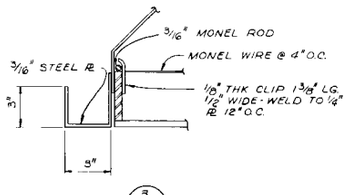

3
EA EQ
SCALE: 1 1/2"=1'-0"

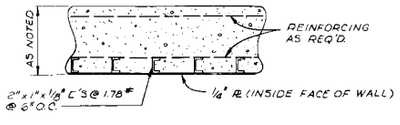

TYP SECT. EXTERIOR WALL

ROOF & FLOOR
SCALE: 1 1/2"=1'-0"

DRAWING ON WHICH SECTION OR DETAIL IS TAKEN — NUMBER OF SECTION OR DETAIL — DRAWING ON WHICH SECTION OR DETAIL IS SHOWN

SECTION & DETAIL KEY

INCHES 0 1 2
TRUE SCALE

NO.	BY	APP'D	DATE	DESCRIPTION	CIVIL	MECH	ELEC	INST	MACH
0									

REVISIONS

REFERENCES:

E.S.O. NO. M-34787
CHANGE
B.M. NO. S-34787-4

SCALE AS NOTED — DATE
DESIGN BY J.W. GREGORY
DRAWN BY C.E. HAMILTON 5-24-68
CHECKED BY JWG
APPROVAL: DEPT. Gregory; OPER.; DIV. Bailey Meter; SAFETY
BLDG. NO.
LOCATION

SQUAD CHECK

STUDY OF LARGE MSF PLANT FOR OFFICE OF SALINE WATER

UNION CARBIDE CORPORATION
NUCLEAR DIVISION
OAK RIDGE GASEOUS DIFFUSION PLANT

250 MGD MSF PLANT
1967 TECHNOLOGY
WITH REVISED TUBE BUNDLE
TYP MODULE PLAN & DETAILS

E-S-34787E2 REV. 0

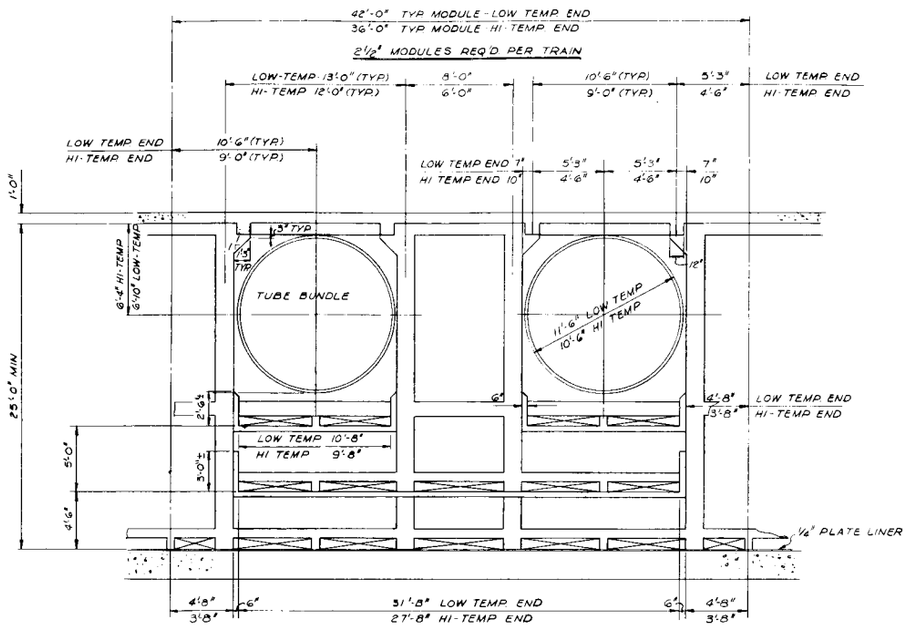

CROSS SECTION CONC. BLDG.
HEAT RECOVERY SECTION
SCALE: 1/4" = 1'-0"

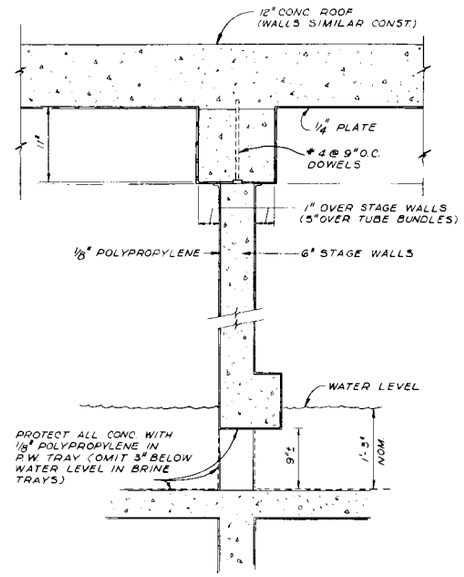

TYP. CONC. STAGEWALL DETAIL
SCALE: 1 1/2" = 1'-0"

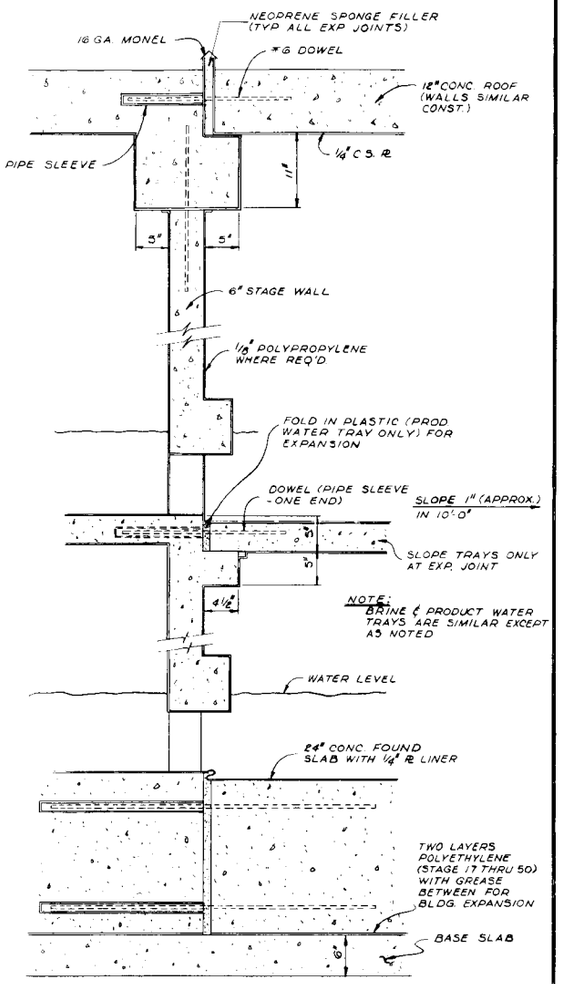

TYP. CONC. STAGEWALL @ EXP. JOINT
SCALE: 1 1/2" = 1'-0"

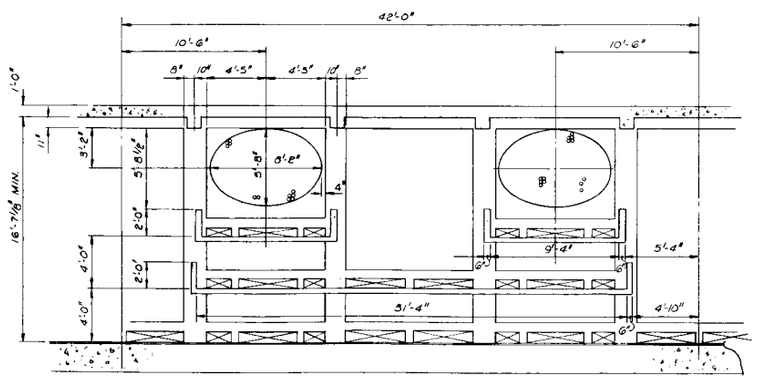

HEAT REJECT
CROSS SECTION
SCALE: 1/4" = 1'-0"

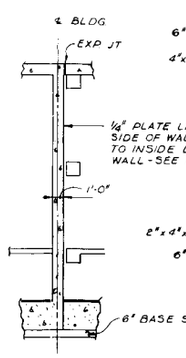

TYP. SECT.
MID-LONGITUDINAL WALL
CONC. SHELL

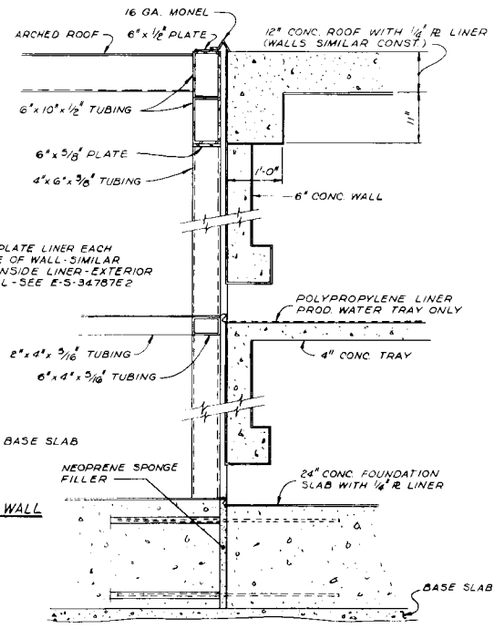

INTERSECTION OF STEEL AND CONCRETE
STAGEWALLS
SCALE: 1" = 1'-0"

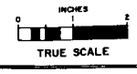

TRUE SCALE

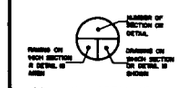

SECTION & DETAIL KEY

NO.	BY	APP'D	DATE	DESCRIPTION	CIVIL	MECH.	ELEC.	INST.	MACH.
0									

REVISIONS — SQUAD CHECK

REFERENCES:

SCALE	AS NOTED	DATE
DESIGN BY	J.W. GREGORY	
DRAWN BY	C.E.H.	5-68
CHECKED BY	J.W.G.	
APPROVAL DEPT.	Gregory	6-68
APPROVAL OPER.		
APPROVAL DIV.	[illegible]	6-10-68
APPROVAL SAFETY		
E.S.O. NO.	M-34787	
CHARGE		
B.M. NO.	S-34787-4	

STUDY OF LARGE MSF PLANT
FOR OFFICE OF SALINE WATER

UNION CARBIDE CORPORATION
NUCLEAR DIVISION
OAK RIDGE GASEOUS DIFFUSION PLANT

250 MGD MSF PLANT
1967 TECHNOLOGY
WITH REVISED TUBE BUNDLE
TYP. CONC. SECTION

BLDG. NO.
LOCATION

E-S-34787D2 REV. 0

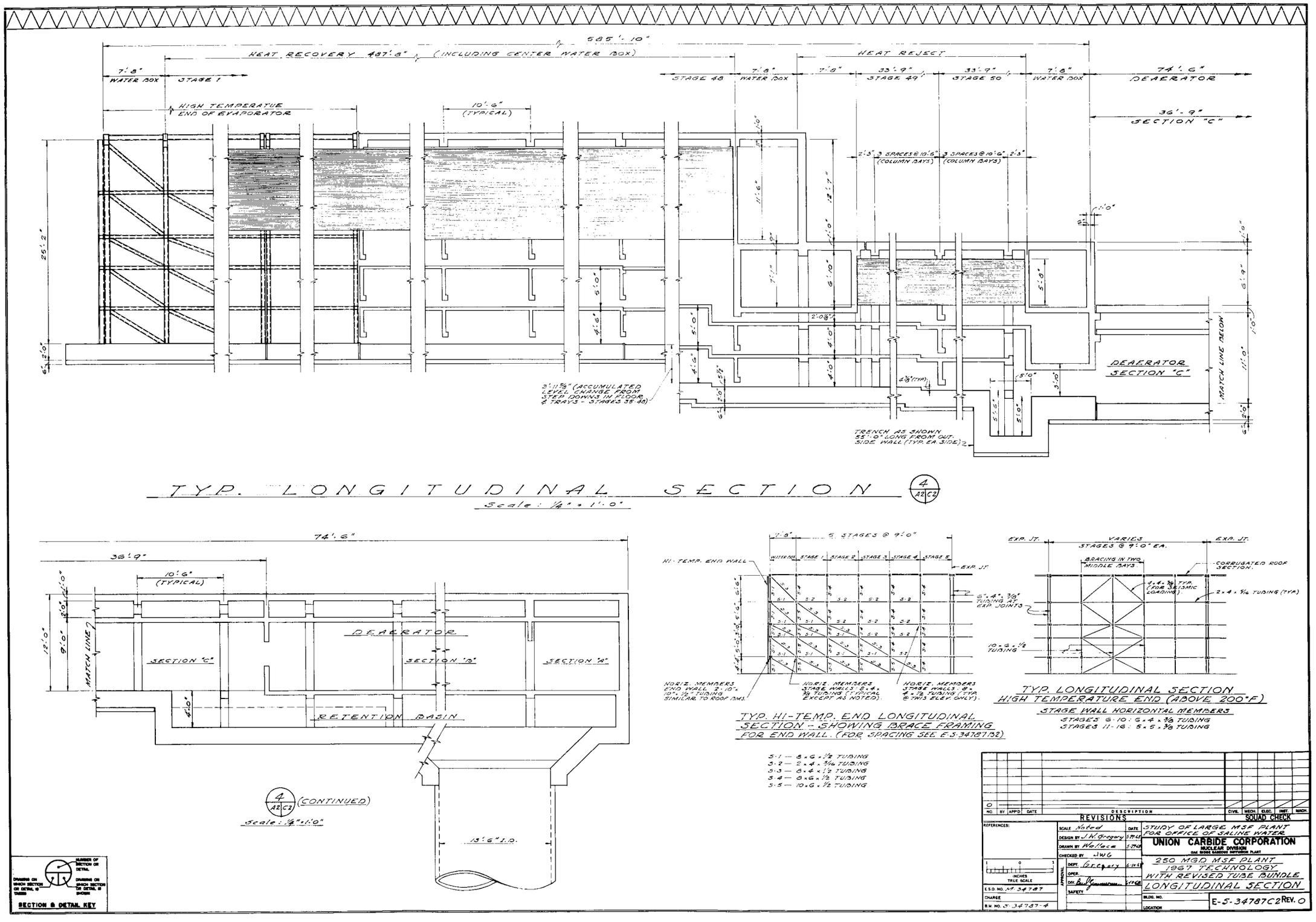

TYP. LONGITUDINAL SECTION

4 / A2 C2

Scale: 1/4" = 1'-0"

4 / A2 C2 (CONTINUED)

Scale: 1/4" = 1'-0"

TYP. HI-TEMP. END LONGITUDINAL SECTION - SHOWING BRACE FRAMING FOR END WALL. (FOR SPACING SEE E-S-34787.02)

S-1 — 8"x6"x 1/2" TUBING
S-2 — 2"x4"x 3/16 TUBING
S-3 — 8"x4"x 1/2" TUBING
S-4 — 8"x6"x 1/2" TUBING
S-5 — 10"x6"x 1/2" TUBING

TYP. LONGITUDINAL SECTION
HIGH TEMPERATURE END (ABOVE 200°F)

STAGE WALL HORIZONTAL MEMBERS

STAGES 6-10: 6"x4"x 3/8 TUBING
STAGES 11-16: 5"x5"x 3/8 TUBING

SECTION & DETAIL KEY

DRAWING ON WHICH SECTION OR DETAIL IS TAKEN — NUMBER OF SECTION OR DETAIL — DRAWING ON WHICH SECTION OR DETAIL IS SHOWN

NO.	BY	APP'D	DATE	DESCRIPTION	CIVIL	MECH.	ELEC.	INST.	MACH.
0									

REVISIONS — SQUAD CHECK

REFERENCES:

SCALE Noted — DATE
DESIGN BY J.N. Gregory 5-7-68
DRAWN BY Wallace 5-7-68
CHECKED BY JWG
APPROVAL: DEPT. Gregory 6-14-68; OPER.; DIV. Bailey Zimmerman 5-7-68; SAFETY

1 0 1 INCHES TRUE SCALE

E.S.O. NO. M-34787
CHARGE
B.M. NO. S-34787-4

STUDY OF LARGE MSF PLANT FOR OFFICE OF SALINE WATER

UNION CARBIDE CORPORATION
NUCLEAR DIVISION
OAK RIDGE GASEOUS DIFFUSION PLANT

250 MGD MSF PLANT
1967 TECHNOLOGY
WITH REVISED TUBE BUNDLE
LONGITUDINAL SECTION

BLDG. NO.
LOCATION

E-S-34787C2 REV. 0

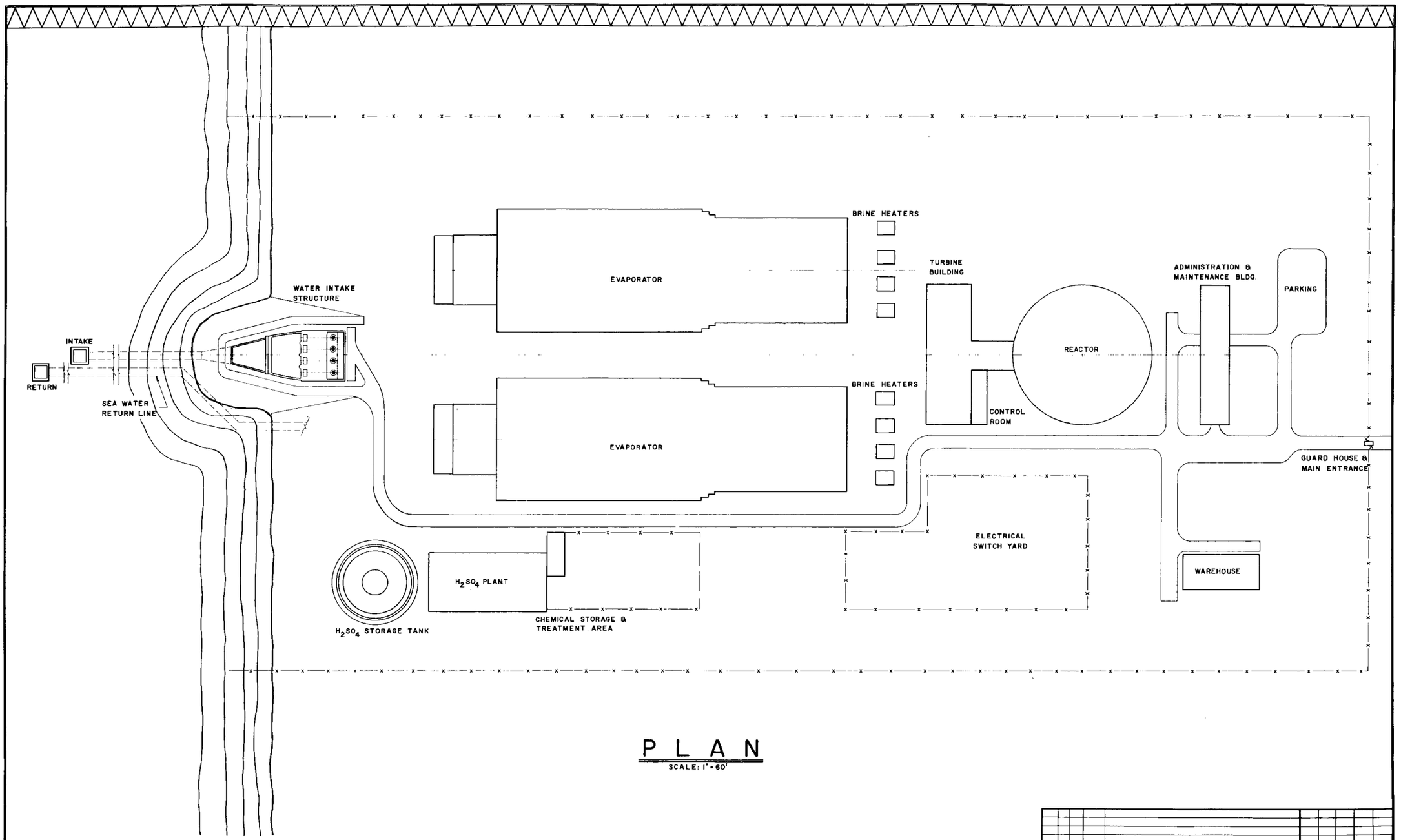

PLAN

SCALE: 1" = 60'

NO.	BY	APP'D	DATE	DESCRIPTION	CIVIL	MECH.	ELEC.	INST.	MACH.

REVISIONS — SQUAD CHECK

REFERENCES:

SCALE 1" = 60' — DATE

DESIGN BY J. W. Gregory

DRAWN BY C. E. Hamilton 3-68

CHECKED BY JWG 3-19-68

APPROVAL: DEPT. 3-25-68; OPER.; DIV. 3/26/68; SAFETY

E.S.O. NO. M-34787-01

CHARGE S-34787-3

B.M. NO.

STUDY OF LARGE M.S.F. PLANT
FOR OFFICE OF SALINE WATER

UNION CARBIDE CORPORATION
NUCLEAR DIVISION
OAK RIDGE GASEOUS DIFFUSION PLANT

250 MGD MSF PLANT
1967 TECHNOLOGY
SITE PLAN

BLDG. NO.

LOCATION

E-S-34787-F1 REV. 0

Office of Saline Water

Report

PRELIMINARY ENGINEERING ANALYSIS AND CAPITAL COST ESTIMATE

CONCEPTUAL DESIGN OF A 250 MILLION GALLON PER DAY MULTISTAGE FLASH EVAPORATOR DESALTING PLANT (TWO-LEVEL BRINE FLOW)

Prepared for

THE OAK RIDGE NATIONAL LABORATORY

(OSW Agreement 14-01-0001-534)

JULY 31, 1968

FOREWORD

This report presents the results of a preliminary engineering analysis and capital cost estimate pertaining to a 250 million gallon per day (mgd) "Multistage Flash Evaporator" conceptual plant design. This work was conducted by the Bechtel Corporation for the Office of Saline Water (OSW) and the Oak Ridge National Laboratory (ORNL) under the provisions of Subcontract Number 3084 by Union Carbide Corporation, Nuclear Division.

All design information, with minor exceptions, was specified to Bechtel Corporation by ORNL. Bechtel Corporation, within the terms of Subcontract No. 3084, determined that the ORNL conceptual design provided sufficient definition to describe the scope and capital cost of a 250-mgd multistage flash plant with two-level brine flow.

The data presented herein pertain to the MSF conceptual design specified to Bechtel Corporation in terms of drawings and bills of material, the revisions of which were produced in two sections, dated May 30, 1968 and June 7, 1968, respectively.

Project records and an estimate data book are part of permanent files in the Bechtel Corporation Home Office at San Francisco, California. These documents contain complete background information pertaining to the preliminary engineering analysis and capital cost reported herein.

Section 1

INTRODUCTION AND SUMMARY

In March 1968, Bechtel Corporation, under subcontract to the Oak Ridge National Laboratory (ORNL), was requested to conduct a preliminary engineering review and prepare a capital cost estimate of a first-of-a-kind 250-mgd conceptual multistage flash (MSF) evaporator desalting plant. Design information was provided by ORNL and was based on current process characteristics and projected structural concepts for the middle or late 1970's. This design information, which constitutes the ORNL concept, was reviewed by Bechtel and revised through mutual agreement with ORNL. In this report, the revised concept is designated the "reference plant," and is the basis for the preliminary technical review and capital cost estimate performed by Bechtel Corporation.

It should be noted that Bechtel's cost analysis is applied solely to capital cost data. Consideration of operating cost parameters, such as unit electrical power cost, were not within the scope of Bechtel's work.

1.1 STATEMENT OF SERVICES

Bechtel's services included:

- Performance of a preliminary structural, mechanical, instrumentation, and electrical engineering review of a 250-mgd MSF evaporator conceptual design provided by ORNL.

- Preparation of a preliminary estimate of capital cost for this plant.
- Preparation of a preliminary estimate of capital cost pertaining to common facilities specified by ORNL and allocation of a percentage of these costs to the MSF conceptual plant estimate as directed by ORNL.
- Provision of assumptions and other design information deemed desirable in preparation of the preliminary estimate of capital costs, consistent with good estimating practices.
- Investigation of all important items included in the ORNL 250-mgd VTE plant design that are directly applicable to the 250-mgd MSF plant cost estimate as shown on drawings or listed in bills of material provided by ORNL.
- Provision of a de-escalation factor to allow adjustment of Bechtel's preliminary estimate to a third-quarter 1967 basis.
- Assistance to the Office of Saline Water in reconciling the ORNL and Bechtel preliminary cost estimates.

The estimate developed by Bechtel is considered an accurate indication of constructed facility cost insofar as the reference design accurately reflects the final configuration of the plant, the quantities and types of materials used, and the actual site conditions.

1.2 SUMMARY OF CAPITAL COSTS

Bechtel Corporation's preliminary capital cost estimate indicates the 250-mgd MSF conceptual plant, as specified by the reference plant design, could be designed and built in southern California by a single engineer-construction manager for $149,725,000 total contract price. This estimate is based upon current second quarter 1968 pricing levels for labor and materials. No construction schedule is assumed, and escalation, a major cost factor, is not included in the Bechtel

estimate. This estimate does not include spare parts or scheduled replacements. The equivalent third quarter 1967 contract price is $143,227,000, or about 95.7 percent of the second quarter 1968 price. This de-escalation factor applies only to the $149,725,000 figure, not to component amounts, and definitely not to desalting plants in general.

1.3 TECHNICAL EVALUATION

As a prerequisite to developing the estimate of capital costs, Bechtel Corporation conducted a technical review of the ORNL concept for the 250-mgd MSF plant. Several constructive exceptions were offered as a result of this review in the areas of structural design, materials of construction, mechanical and process equipment, instrumentation and controls, and electrical design. These exceptions were considered at a mid-project review meeting at Oak Ridge, Tennessee, and those listed below were mutually accepted by ORNL and Bechtel as improvements to the ORNL concept without changing the scope of Bechtel's services. The items recapitulated in the list below, and discussed in more detail in Section 3 of this report, are the basis of the reference plant design and the corresponding capital cost estimate presented in Section 2:

- The voltage for the 18,000-hp brine recycle motors is changed from 4160 to 13,800 volts.
- The evaporator bundle design is revised to OSW specifications.
- The floor slab thickness is reduced from 3 feet to 2 feet, and a bearing pad for the base of the structure is provided.
- The vent system is revised to provide separate vent systems for (1) the above-atmospheric pressure portion of the heat recovery section, (2) the below-atmospheric pressure portion of the heat-recovery section, and (3) the heat reject section. In addition, two hogging ejectors are provided for the four trains.

- A sodium sulfite addition system is provided to assure adequate oxygen removal of the makeup stream coming out of the deaerator.
- A pump is added in the seawater stream to the ejectors.
- Stages 49 and 50 are changed to provide equal length in each stage.
- Stainless steel vanes or deflectors are provided in the cold-water makeup section of the deaerator to reduce the carryover of water vapor to the vent evacuation system.

The reference plant is defined to a level of detail normally associated with, and in some instances exceeding, a "conceptual design" for a facility of this type and size. The reference plant concept would appear to be technically feasible assuming that current materials research programs adequately corroborate the new approaches reflected in the reference plant concept, and further assuming that the concept is thoroughly proof-tested in a test-bed or module facility.

Although the process concept of MSF plants is well established in desalting technology, the need to improve the state-of-the-art becomes more demanding as MSF plants increase in capacity. In this regard, Bechtel Corporation suggested several alternatives to the reference plant concept that are also of indicated feasibility and which probably offer economics in plant capital cost. These alternative approaches are discussed in Section 3 and probable resulting capital cost changes presented. Detailed comparative engineering and cost analyses of the alternatives were beyond the scope of Bechtel's services for this contract.

1.4 APPENDIXES

The report is augmented by three appendixes:

- Appendix A presents a study of a hypothetical site in northern San Diego County, California, which facilitates preliminary site selection and establishes governing geological and seismological characteristics for the site.
- Appendix B is a compilation of codes and standards applicable to many components of the overall desalting plant.
- Appendix C covers the detailed civil-structural analysis of the ORNL reference plant evaporator design. There are two parts: the first is structural analysis of the original conceptual plant and the second presents criteria and structural calculations for the reference plant.

Section 2

CAPITAL COST ESTIMATE

2.1 BASES FOR ESTIMATE

General Bases for the estimate are as follows:

Services

This estimate assumes one prime contractor (Engineer-Construction Manager) to perform Engineering, Procurement, and Construction. Where necessary the prime contractor will subcontract specialty package Engineering, Construction, or fabrication.

Design

This estimate is based upon design drawings, specifications, equipment lists, and quantity takeoffs supplied by ORNL. Some modifications to the design or quantities have been made by Bechtel, but all modifications have been reviewed and approved by ORNL for inclusion in the reference plant estimate. Some major design changes have been suggested by Bechtel, and these have been estimated as alternative costs to the reference plant design.

Design Scope

This estimate is for the entire desalting plant only. Some portion of facilities common with the nuclear power plant has been included where required. Certain items have been excluded from the estimate, however, and these are listed under subsection 2.2, "Qualifications of Fstimate."

Pricing Level

This estimate is based upon second quarter 1968 pricing levels for labor and materials. No escalation or other costs associated with construction schedule are included.

Productivity Level

This estimate is based upon a manual labor productivity level comparable with San Onofre Nuclear Generating Station.

Manual Labor Availability

This estimate is based upon a forty (40) hour work week. Some shift work and overtime by concrete trades, riggers, and trades involved in functional testing are included. No allowances for labor, travel, or subsistence are included since no exact site location is specified.

Plant Site

The plant site is assumed to be a Southern California coastal beach, generally level, and at an elevation of approximately 35 feet. The site is assumed to have about a 200-foot wide beach strip sloping down to the main ocean water level.

Process Design

Costs exclude guarantees associated with the basic heat transfer process design and all costs are based upon this process design as received from ORNL. Any change in the process design or heat transfer coefficients assumed in this design will materially affect the project costs.

Contingency

Contingency is computed on a first-of-a-kind facility of this scale and design. Contingency includes risk-factor cost allowances for inherently unforeseeable problems encountered in large-scale construction of this nature.

Equipment Costs

Equipment costs for pumps, tube bundle fabrication, tubes, brine heaters, large valves, entrainment separators, and other large special items are based upon quotations from qualified manufacturers for manufacturing, fabricating, furnishing, and/or installing. All auxiliary equipment, instruments, and other materials are priced from Bechtel's current market estimating price data.

Common Facilities

Common and yard facilities which were specified by ORNL and which will generally serve both the nuclear power plant and the desalting plant have been evaluated in total and 33 percent (percentage specified by ORNL) of their cost has been allocated to the desalting plant.

Evaporator 90-10 Cu-Ni Clad Tubesheets

Costs for these items are based on 1/8-inch thick cladding instead of 1/16-inch thick cladding as called for in the ORNL Bills of Material. This increase in thickness reflects the experience of the bundle manufacturers.

Start-Up

An allowance for technical and manual labor start up assistance to owner's personnel is included.

Interest During Construction

Interest during construction amounting to a total of 5.7 percent of overall constructed plant costs, less owner's costs, has been included. (Percentage specified by ORNL)

The estimate, in the format requested by ORNL, is shown in Table 2-1 at the end of this section.

2.2 QUALIFICATIONS OF ESTIMATE

- The seawater intake structure and brine outlet complex including all screen equipment, piping, marine and other structural work is an allowance derived from recent Bechtel cost experience on this type and scope of shoreline seawater intakes.
- No attempt has been made to assess possible substructure bearing problems relating to site soil conditions. No piling or other foundation work, other than that called for by ORNL, is included.
- Estimate does not include any spare parts or initial operating supplies of any kind.
- Estimate includes no client's costs other than the specified interest during construction. All land, land acquisition, rights of way, power to site, client's organizational costs, client's engineering and field costs are excluded.
- No provision is made for operator training.
- Seismic conditions are assumed to have been considered and design allowances made in the ORNL design.
- Contingency cost as shown in this estimate is intended to cover costs required to obtain plant of scope as shown in the ORNL design. The contingency is not intended to cover changes in scope.
- No main switchyard costs are allocated to the desalting plant (per ORNL specifications).

- The format used in presenting the Capital Cost Breakdown was specified by ORNL. Technical data provided by ORNL furnished sufficient definition of subsystems and common facilities to permit the detailed breakdown of the capital cost estimate reflected in Table 2-1 at the end of the section.

2.3 DE-ESCALATION

The Plant Capital Costs of $149,725,000 in second quarter 1968 dollars has been de-escalated to $143,227,000 in third quarter 1967 dollars.

A study of costs and cost trends since third quarter 1967 was prepared, a statistical breakdown was made, and cost comparisons on work presently going on versus work in progress in third quarter 1967 were determined. A de-escalation factor of 4.3443 percent was applied to the current estimate of capital costs to convert this cost to third quarter 1967 figures. This de-escalation is applicable only to the total project cost figure and cannot be applied accurately to individual items or subtotals, since it is a weighted average at de-escalation factors. It is cautioned that the de-escalation factor developed to enable adjustment of the current estimate to a third quarter 1967 basis applies only to the $149,725,000 estimated second quarter 1968 investment. In addition, because the proposed plant is unique, this de-escalation factor cannot be applied to desalting plants in general.

2.4 UNIT COSTS

The following are the average unit costs unique to this design:

Installed Concrete	$240.00/cu yd
Installed Fabricated Steel	$986.00/ton
Copper Used in Tubing	$ 0.42/lb
Nickel Used in Tubing	$ 0.955/lb

Heat Recovery Tube Delivered to Site	$ 1.57/sq ft
Heat Reject Tube Delivered to Site	$ 1.78/sq ft
Installed Heat Recovery Tube Bundle	$ 2.11/sq ft
Installed Brine Heater	$ 5.10/sq ft
Installed Heat Reject Tube Bundle	$ 2.70/sq ft
Installed Polypropylene Liner	$ 1.42/sq ft
Installed Monocalcium Aluminate Cement on Steel Surface	$ 1.48/sq ft
Installed Demisters	$28.95/sq ft
Total Installed Pumps (without motors)	$ 1.78/gpm
Total Installed Pump Motors	$39.80/hp

The following qualifications apply to the above client-requested unit prices:

- Unit prices are derived from this estimate and include all installed field costs.
- Unit prices <u>exclude</u> engineering, contingency, construction management, and interest during construction.
- Unit prices are valid for total quantities and sizes of equipment in the capital cost estimate. No attempt can be made to use these unit prices to estimate costs of other desalting plants, or of additions or deletions to this plant.

Repeated attempts to obtain the following costs were unsuccessful on the grounds that the vendors considered them proprietary:

- 90-10 cupro-nickel clad tube sheet
- Drilling tube sheet holes
- Tube insertion
- Tube rolling

Table 2-1

CAPITAL COST BREAKDOWN

I	Site Work		
	A. Rough and Final Grading	$102,000	
	B. Roads, Parking, Sidewalk and Paving	68,000	
	C. Fencing and Guard House	9,000	
	D. Railroad	54,000	
	E. Sewer and Drainage System	45,000	
	F. Landscaping	51,000	
	G. Outside Lighting	83,000	
	H. Fire and Sanitary Water System	101,000	
	Total Sitework		$513,000
II	Water Intake		$8,520,000
III	Buildings		$247,000
IV	Chemical Treatment and Miscellaneous Systems		
	A. Chlorination System	$ 286,000	
	B. On-Site Acid Plant	1,552,000	
	C. Acid Treatment System	241,000	
	D. Antifoam System	28,000	
	E. Product Water Treatment	949,000	
	F. Compressed Air System	116,000	
	G. Chemical Treatment Building	85,000	
	H. Caustic Addition	51,000	
	I. Fire and Sanitary Water Systems	With Sitework	
	J. Water for Pump Seals	24,000	
	K. Sodium Sulfite System	42,000	
	L. Hydraulic System	151,000	
	Total Chemical Treatment and Miscellaneous Systems		$3,525,000
V	Pumps and Drives		
	A. Seawater Intake		
	1. Pump	$ 836,000	
	2. Drive	536,000	
	Subtotal	$1,372,000	

Table 2-1

CAPITAL COST BREAKDOWN

V	Pumps and Drives (Cont'd.)	
	B. Brine Recycle	
	1. Pump	$2,461,000
	2. Drive	2,666,000
	3. Excavation and Fill	129,000
	4. Pump Pit Concrete	826,000
	Subtotal	$6,082,000
	C. Deaerator	
	1. Pump	429,000
	2. Drive	151,000
	3. Excavation and Fill	65,000
	4. Pump Pit Concrete	404,000
	Subtotal	$1,049,000
	D. Product Water	
	1. Pump	403,000
	2. Drive	189,000
	3. Excavation and Fill	73,000
	4. Pump Pit Concrete	421,000
	Subtotal	$1,086,000
	E. Blowdown	
	1. Pump	264,000
	2. Drive	79,000
	3. Excavation and Fill	36,000
	4. Pump Pit Concrete	305,000
	Subtotal	$684,000
	F. Drain Pump	
	1. Pump	2,000
	2. Drive	1,000
	Subtotal	$3,000
	G. Vent Pump	
	1. Pump	20,000
	2. Drive	5,000
	Subtotal	$25,000

Table 2-1

CAPITAL COST BREAKDOWN

V	Pumps and Drives (Cont'd.)		
	H. Ejector Condenser Circulating Water		
	1. Pump	$6,000	
	2. Drive	2,000	
	Subtotal	$8,000	
	Total Pumps and Drives		$10,309,000
VI	Piping and Valves		
	A. Seawater	$656,000	
	B. Deaerator Pump	509,000	
	C. Recycle Brine	655,000	
	D. Brine Heater	807,000	
	E. Blowdown	138,000	
	F. Brine Reject	561,000	
	G. Product Water	566,000	
	H. Drain System	4,000	
	I. Vent System	533,000	
	Total Piping and Valves		$4,429,000
VII	Degasification System		
	A. Deaerator		
	1. Structure	$901,000	
	2. Liners and Coatings	90,000	
	Subtotal	$991,000	
	B. Centralized Ejector System		
	1. Ejectors and Condensers	498,000	
	Total Degasification System		$1,498,000
VIII	Evaporators		
	A. Shell		
	1. Concrete Foundations and Slabs		
	a) Excavation	$ 134,000	
	b) Foundations	2,690,000	
	Subtotal	$2,824,000	

Table 2-1

CAPITAL COST BREAKDOWN

VIII Evaporators (Cont'd)		
2. Structural Coatings and Linings	$ 1,498,000	
3. Steel Plates and Channels	4,168,000	
4. Stage Partitions and Columns	7,139,000	
5. Longitudinal Beams	212,000	
6. Exterior Walls	1,326,000	
7. Roof	2,604,000	
8. Brine and Product Trays		
a) Concrete and Steel	3,044,000	
b) Polypropylene Linings	661,000	
Subtotal	$ 3,705,000	
9. Miscellaneous Ducts	215,000	
10. Access Hatches and Penetrations	28,000	
11. Expansion Joints	60,000	
12. Tube Sheet Baffles	Incl. in Tube Bundle	
13. Water Level Controls	Incl. with Stage Partitions	
14. Pressure Relief Devices	7,000	
Subtotal - Shell (Items 1-14)	$23,777,000	
B. Vapor Traps		
1. Demisters	1,763,000	
2. Demister Supports	763,000	
Subtotal	$ 2,526,000	
C. Tubes		
1. Heat Recovery	36,667,000	
2. Heat Reject	2,402,000	
Subtotal	$39,069,000	
D. Tube Bundle Fabrication		
1. Heat Recovery	12,731,000	
2. Heat Reject	1,239,000	
Subtotal	$13,970,000	
Subtotal Tubes and Bundle Fabrication	$53,039,000	
Total Evaporators		$79,342,000

Table 2-1

CAPITAL COST BREAKDOWN

IX	Brine Heater		
	A. Tubes	$2,698,000	
	B. Fabrication and Installation	3,347,000	
	Total Brine Heater		$ 6,045,000
X	Crane		83,000
XI	Electrical		1,372,000
XII	Instrumentation		1,957,000
	Direct Capital Cost		$117,831,000
Engineering, Vendor Engineering and Construction Management			7,685,000
Contingency (Plant as Designed)			16,135,000
	Subtotal		$141,651,000
5.7% Total Interest During Construction (Percentage required by ORNL)			8,074,000
Total Capital Cost (Excluding Client Costs)			$149,725,000
Capital Cost Per Daily Gallon			$0.599

Section 3

TECHNICAL EVALUATION

3.1 GENERAL

The preliminary capital cost estimate prepared by Bechtel Corporation is in accordance with the reference plant design. In performing the engineering analysis within the scope of services requested by ORNL, several modifications were made which, in Bechtel's opinion, were required to fulfill the engineering design and economic objectives of the conceptual plant. This section treats these modifications in detail sufficient to define intent and costs.

In addition, this section discusses suggested alternates to the reference plant concept and possible economic improvements which would result.

3.2 CIVIL-STRUCTURAL

The ORNL 250-mgd MSF conceptual plant reflects advanced structural arrangements. This section reviews the structural engineering aspects of the conceptual plant assuming that materials behavior and response to loads can be predicted and extrapolated from current knowledge and practices to the novel applications used in the ORNL concept. Thus, this section summarizes the analysis to determine the adequacy of the conceptual plant structure to respond properly to postulated design loads.

Advanced materials concepts are discussed subsequently in Section 3.6, Materials, which indicates the need for continued further proof-tests throughout a range of operating conditions to provide the confidence level which would be an acceptable basis for final structural design of the conceptual plant.

Bechtel's analysis of the conceptual plant indicated certain necessary modifications to the roof structure. Subsequently, the conceptual plant was revised according to Bechtel recommendations which were confirmed by further structural investigation. This section of the report discusses the evaluation of both the conceptual plant and the reference plant. Corresponding engineering calculations and design criteria are presented in Appendix C-1 for the conceptual plant and Appendix C-2 for the reference plant. Finally, this section briefly outlines an alternative structural approach which Bechtel believes would result in a more economical evaporator vessel.

3.2.1 Stress Analysis of the Evaporator (Reference Plant)

The engineering analysis of the evaporator assumes a "typical" Southern California coastal site which would have adequate foundation strength. A "typical" coastal site, as indicated by Appendix A, is a relatively imprecise concept in the Southern California environment where geology and topography are quite variable. Previous work by Bechtel indicates sites in the study area that provide adequate foundation conditions for the conceptual plant. Thus, no detailed analysis of foundations was conducted.

The reference plant is not otherwise site adapted. Final overall arrangement may vary from that assumed as a basis for this preliminary analysis and capital cost estimate. The final plant elevation of 35 feet above datum is used as a design basis although an elevation of 20 feet

is more consistent with current practice in southern California. No allowance is made in this analysis from a technical standpoint to compensate for possible revised general arrangement of the reference plant concept.

The general bases of the structural analysis are the Uniform Building Code, AISC specifications, and the ASME Boiler and Pressure Vessel Code, Section VIII. A lateral seismic acceleration of 0.2g, used as a static load, is also a basis of the evaluation.

Engineering evaluation of critical areas of the reference plant indicates the structure is adequately defined to permit development of required capital cost estimates. Necessary concrete reinforcement is summarized in Section 3.3.2, Recommendations.

3.2.1.1 Steel Framing Structure. The longitudinal multispan, closed, rigid frames offer an economical approach to providing necessary strength and support for the large steel evaporator vessel used in the first sixteen stages of the reference plant. This framing structure is adequate as originally specified by ORNL.

This structure was analyzed when subjected to temperature rise. There is a non-uniform displacement in the framing structure because the differential thermal expansion between the concrete floor and the steel beams (of the framing structure) induces stresses in the bottom section of the columns. The combined stresses in the columns are acceptable when the floor slab is permitted to expand, although stresses in excess of allowable maximum would result if the floor slab were not free to expand. Thus, a bearing pad for the floor slab is indicated. Other portions of the framing structure will have approximately the same differential temperature and resultant uniform expansion with acceptable

thermal stress levels. Adequate expansion joints are provided to assure confidence in this assumed response.

The framing structure was also analyzed with respect to internal pressure, dead load, live load, and seismic forces. These analyses indicate the steel frame is adequately defined in concept to permit development of a capital cost estimate.

3.2.1.2 Floor Slab. The floor slab is supported on bearing pads and provided with expansion joints to allow it to slide over the substructure. It is anchored at the mid-point, between the expansion joints, to prevent it from displacing laterally.

Necessary control of slab position in spite of temperature-derived stresses of startups and shutdowns, and stresses imposed by earthquakes, is accomplished through fixed-bearing pads or key-type construction.

Analysis of temperature effect on the floor slab confirms that expansion joints are necessary to prevent stresses of significant magnitude in the framing structure and floor slab. Maximum temperature-induced stresses in the slab will occur when the back of the slab is at ambient conditions and the temperature-gradient across the slab is as much as the hot end differential of about 171 F.

Analysis was also performed for thermal shock. The analysis indicates that the concrete slab can withstand a 53 F sudden change of temperature. The limiting factor is the slab's ability to accommodate the compressive stress produced in the surface layer of the heated slab face. The evaporator temperature should be increased gradually. The temperature analysis indicates that, regardless of the degree or rate of temperature change of the face of the slab, the temperature

of the back of the floor slab will begin to increase from ambient after 8.3 hours.

The floor slab was analyzed when subjected to the loading conditions of the steel section and the concrete section. The analysis indicated an adequate design margin of safety for the reinforced concrete slab.

3.2.1.3 Steel Stage Wall. Stage walls containing framing structures and covered by 1/2-inch-thick stiffened plates support the tube bundles and resist loads of differential pressure between adjacent stages, dead loads, live loads, and seismic loads. The weight of the tube bundles acts on the frames through rectangular tube sheets. Analysis of the stage wall framing system indicates the same behavior as the longitudinal framing discussed in section 3.2.1.1. The cover plates and stiffeners of the stage walls safely sustain the loads imposed by pressure and temperature differential between stages.

3.2.1.4 Barrel-Vault Steel Shell. The barrel-type shell of the roof and the exterior wall was analyzed when subjected to an internal pressure of 12.2 psi. Temperature effects can be disregarded, as discussed in Section 3.2.1.1, because of the uniform expansion of the upper part of the structure. Shell analysis of the barrel-vault roof indicates that longitudinal edge beams are required at each cusp of the roof, as reflected in the reference plant. The longitudinal edge beams stiffen the shell edges and act together with the shell in carrying loads to the transverse frames. An examination of the roof shell stresses indicates that maximum longitudinal stresses occur at the edges of the shell in the middle of the edge beam spans, and that these stresses are considerably higher than other stresses, including circumferential stresses. Maximum stresses in the roof shell remain beneath the maximum allowable stress of the ASME Pressure Vessel

Code. Stresses in the exterior wall should be limited by using a series of transverse beams spaced similarly to the transverse spans of the roof.

3.2.1.5 Concrete Framing Structure. The concrete framing structure extends in the longitudinal direction, and is provided with expansion joints between bays. This structure was analyzed when subjected to an internal vacuum of 14 psig, seismic force, dead load, and live load. The analysis indicates that the stresses are below the maximum allowable for the concrete and for the reinforcing steel needed for the columns and beams. A safety factor 3.5 was used. Temperature-derived stress was disregarded for the reasons given in Section 3.2.1.1.

3.2.1.6 Roof and Wall Panels. The concrete roof and wall panels were analyzed when subjected to external pressure (vacuum), dead load, and live load. The analysis was performed in accordance with the Uniform Building Code, and the required reinforcing steel determined. An acceptable factor of safety in the concrete is indicated by the analysis.

3.2.1.7 Concrete Stage Walls, Water Trays, and Water Boxes. Interstage walls were analyzed for a differential pressure of 1.4 psi. The reinforcing steel used was in accordance with minimum Uniform Building Code standards. The slab of water trays was analyzed when subjected to the weight of water, and the required reinforcing steel determined. Analysis of the bottom slab of the waterboxes, subjected to the weight of the water, indicates that the stresses in the concrete are under maximum allowable stress, with a margin of safety. The required reinforcing steel was determined.

3.2.2 Recommended Reinforcing Steel for Reference Plant

The following is the required reinforcing for the concrete structures in the reference plant.

Structure	Reinforcement (lb/yd^3)
Floor slab	210
Roof slab and exterior wall	350
Columns	550
Beams under tray	280
Roof beams	180
Stage wall	150
Slab of tray or any other 6-inch-thick slab	240
Slab of 9-inch thickness under water box	380

3.2.3 Alternative All-Concrete Evaporator

The alternative design is based on utilizing reinforced concrete for all structures in the evaporator. This is accomplished by replacing the steel stages at the hot end of the reference plant by concrete stages similar to stage 17, which is the first concrete stage of the reference plant, and by using a water box of reinforced concrete similar to that used in the concrete portion of the reference plant. An end wall with a 2-foot thickness similar to the floor slab is used. The width of the stages and the layout of the expansion joints remains unchanged, according to the layout of the hot end of the reference plant. A suitable arrangement for reinforcement where columns and walls connect to the floor and roof was developed. The modifications required for this alternative case are shown in Figures 3-1 through 3-7.

Analysis of the concrete portion of the reference plant shows that it can withstand the dead load and a vacuum condition corresponding to an external pressure of about 14 psi. Analysis of these same structures under an internal pressure of 12 psi also indicates satisfactory perfor-

mance. Since the design load of the hot end of the evaporator is for an internal pressure of about 12 psi, the concrete structures of the reference plant can be used at the hot end as far as loading is concerned.

The effect of temperature presents no problem, since expansion joints are provided. It should be emphasized, however, that startup should be performed gradually in order to avoid the stresses of thermal shock on the floor slab.

3.2.4 Costs

The alternative approach of the all-concrete evaporator discussed in the preceding paragraphs has been estimated. The total capital cost (excluding client costs) for this alternative approach is a deduction of $1,012,000 from the ORNL reference plant estimate.

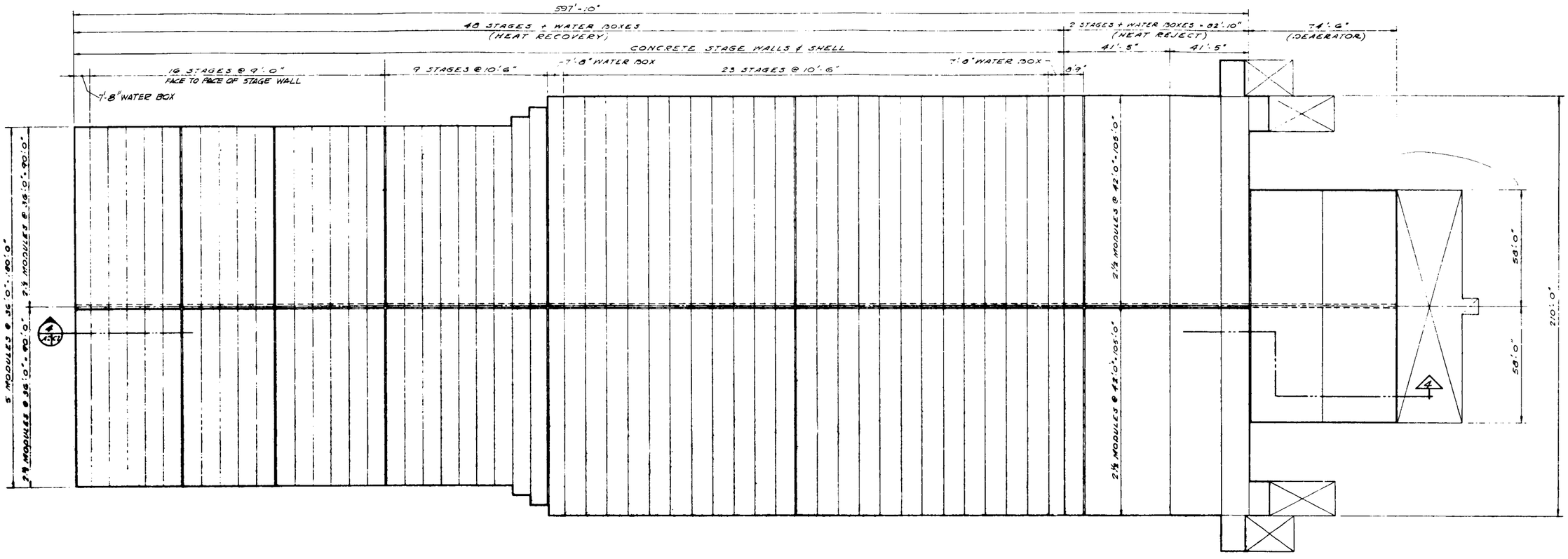

PLAN
BUILDING WITH TWO TRAINS
(FOUR TRAINS REQD. PER PLANT)
SCALE: 1" = 20'

INCHES
0 1 2
TRUE SCALE

Figure 3-1. Evaporator Plan

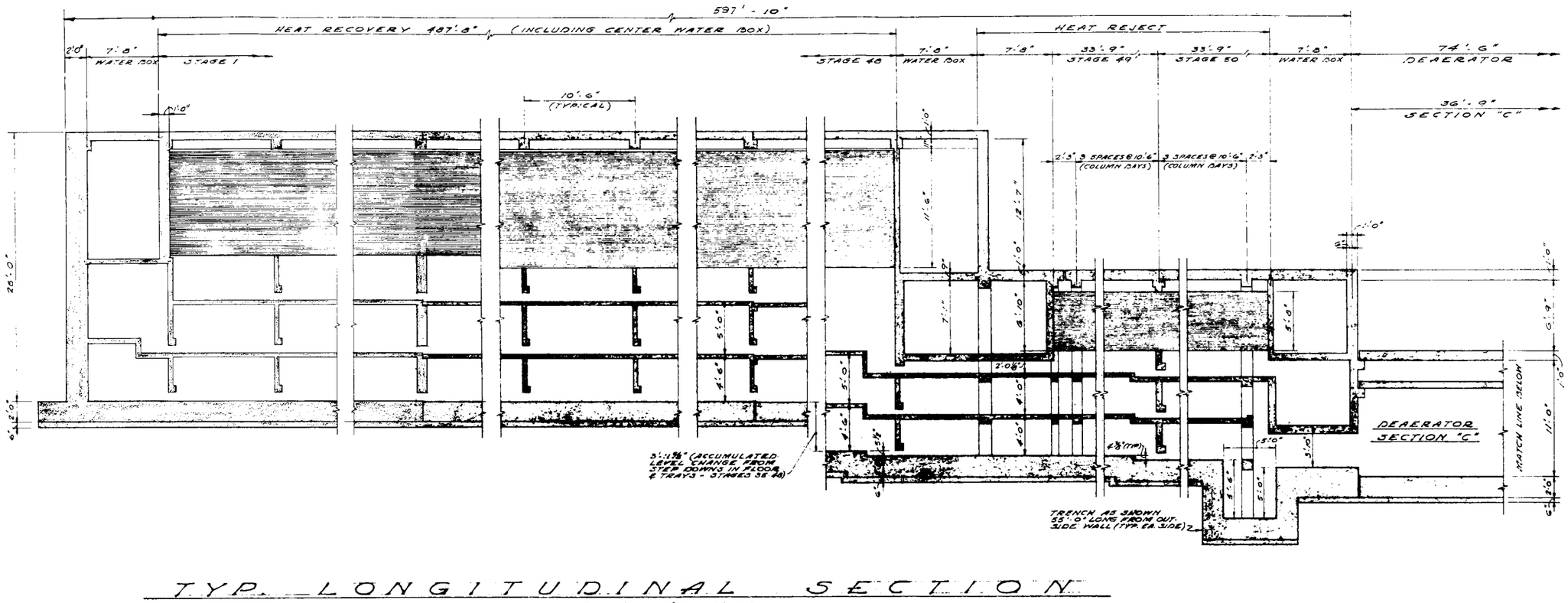

TYP. LONGITUDINAL SECTION

Scale: 1/4" = 1'-0"

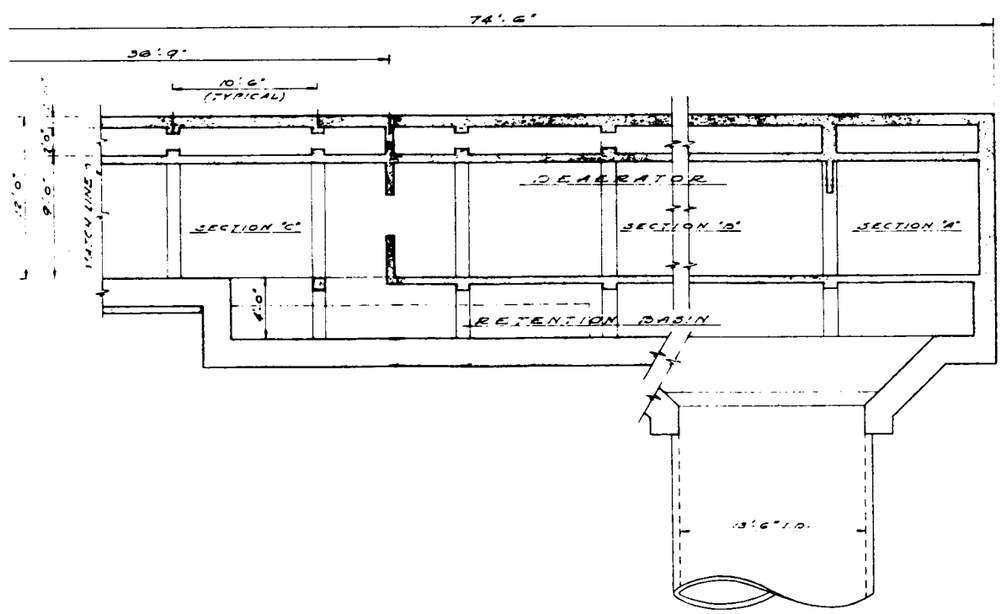

Figure 3-2. Longitudinal Section 1

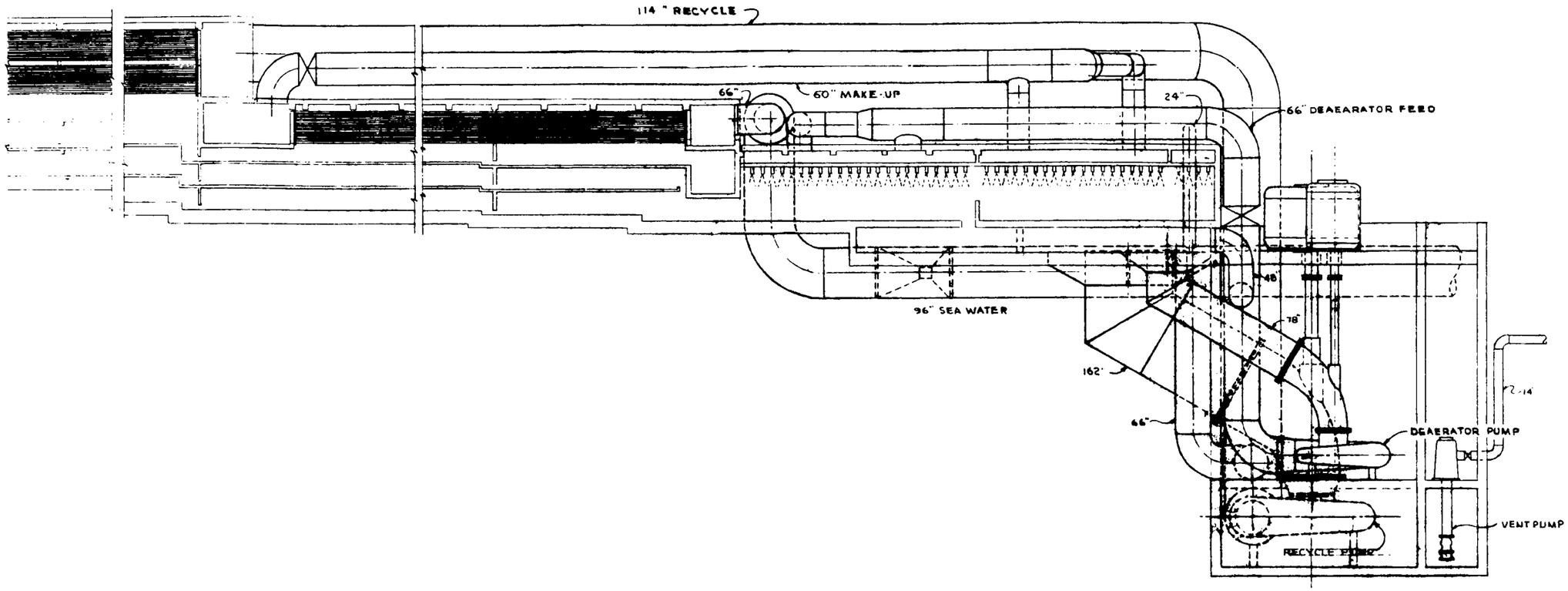

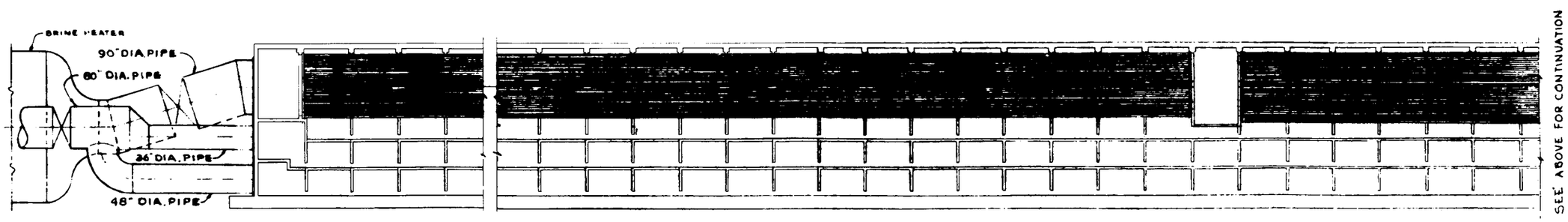

LONGITUDINAL SECTION

Figure 3-3. Longitudinal Section 2

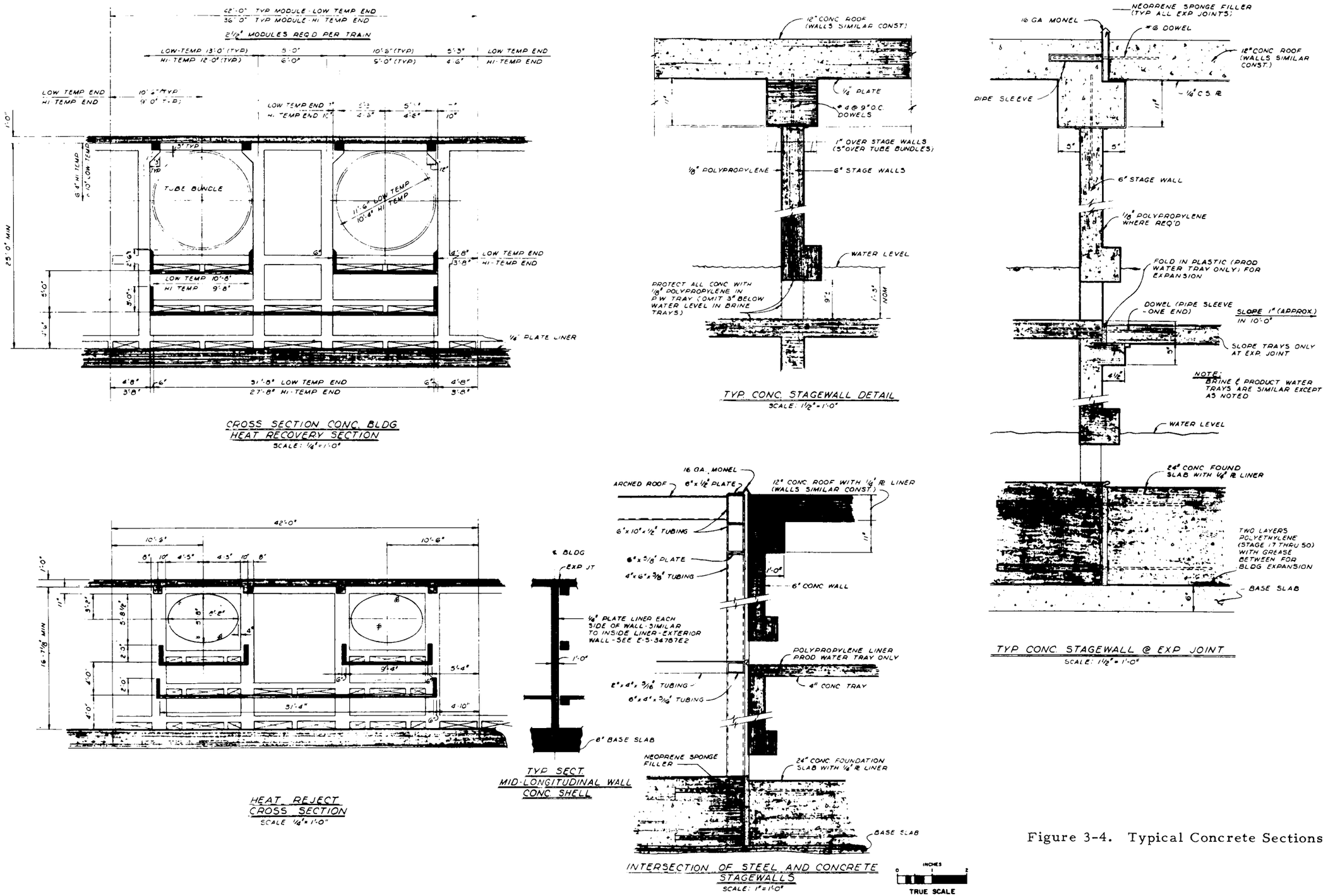

Figure 3-4. Typical Concrete Sections

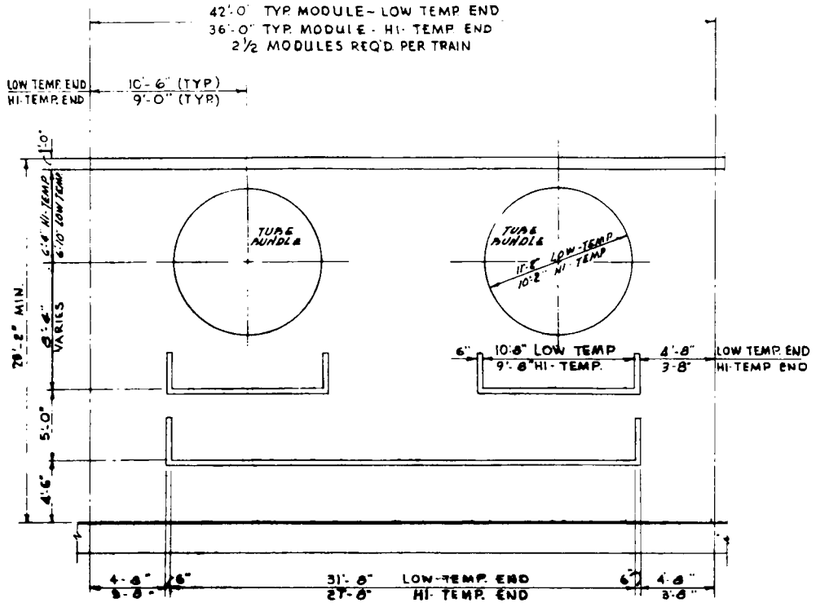

CROSS SECTION CONC. BLDG.
HEAT RECOVERY AREA
SCALE: ¼" = 1'-0"

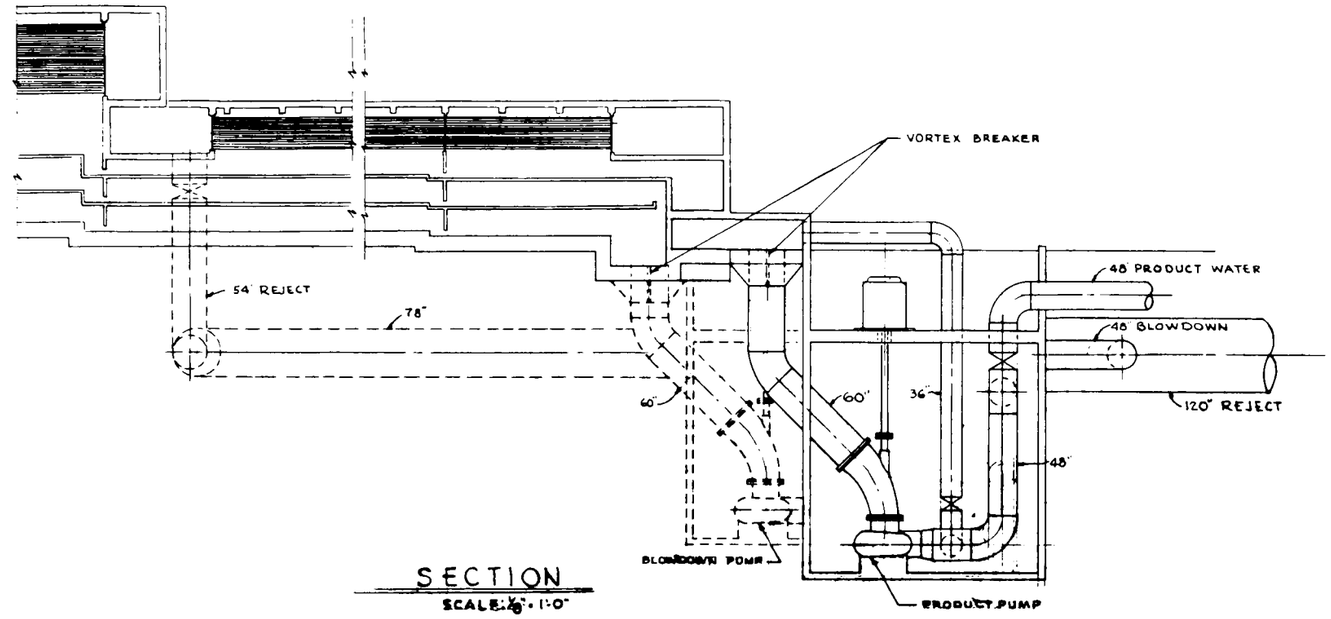

SECTION
SCALE: ⅛" = 1'-0"

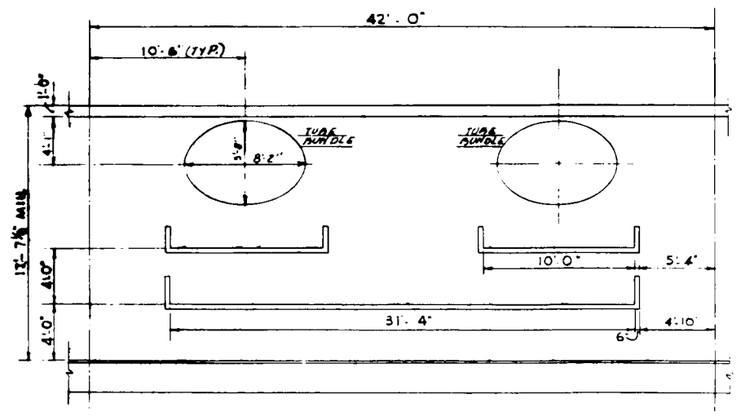

CROSS SECTION
HEAT REJECT AREA
SCALE: ¼" = 1'-0"

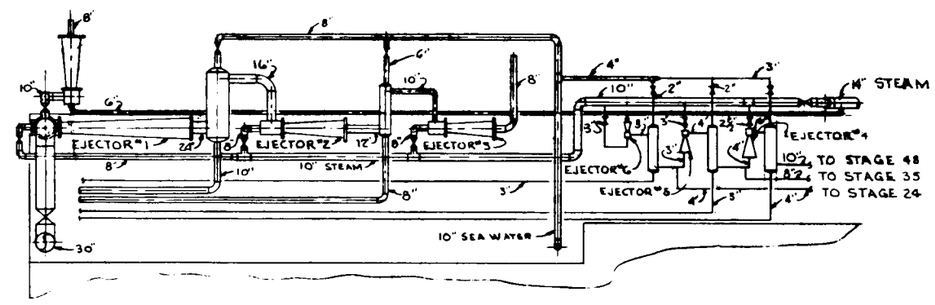

SECTION
SCALE ⅛" = 1'-0"

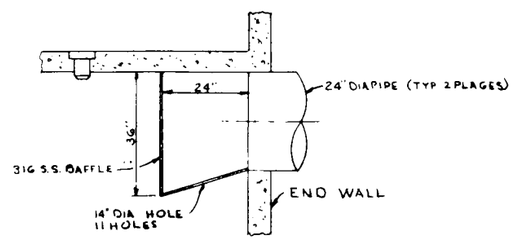

DEAERATOR VENT REMOVABLE
DETAIL
NO SCALE

Figure 3-5. Specific Sections

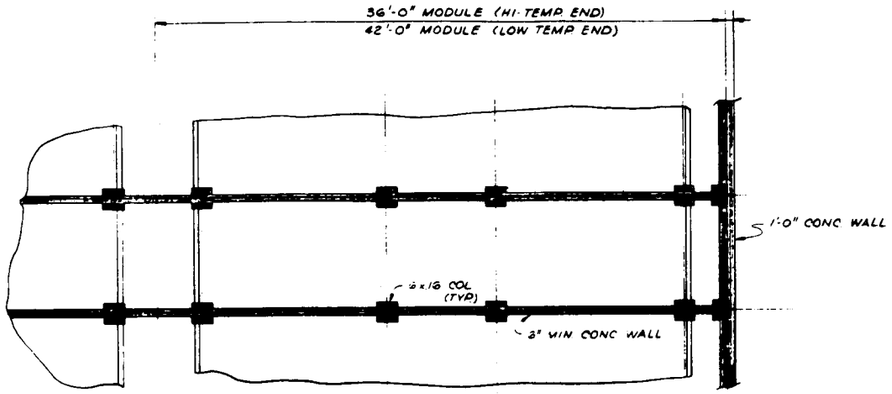

PLAN - SHOWING UPPER BRINE TRAY CONCRETE CONSTRUCTION
SCALE: 1/4" = 1'-0"

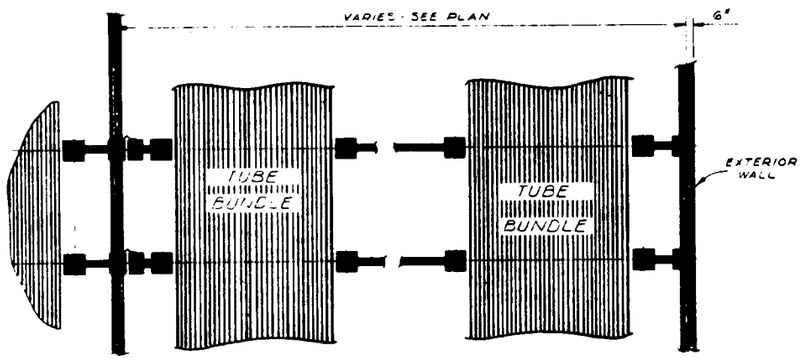

PLAN - SHOWING TUBE BUNDLES AND TYP EXP JOINT — CONCRETE CONSTRUCTION
SCALE 1/4" = 1'-0"

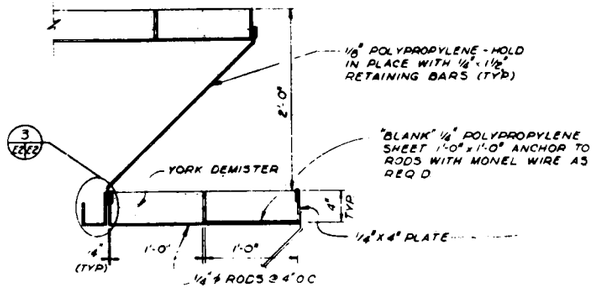

2 / E&E1
SCALE: 1 1/2" = 1'-0"

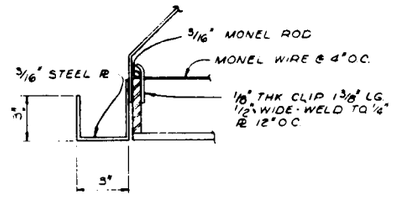

3 / E&E2
SCALE: 1 1/2" = 1'-0"

TYP SECT EXTERIOR WALL
ROOF & FLOOR
SCALE: 1 1/2" = 1'-0"

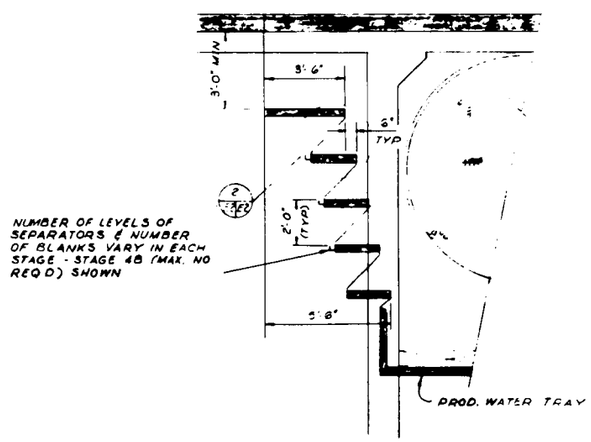

TYP ENTRAINMENT SEPARATOR DETAIL
SCALE 3/8" = 1'-0"

Figure 3-6. Typical Module Plan and Details

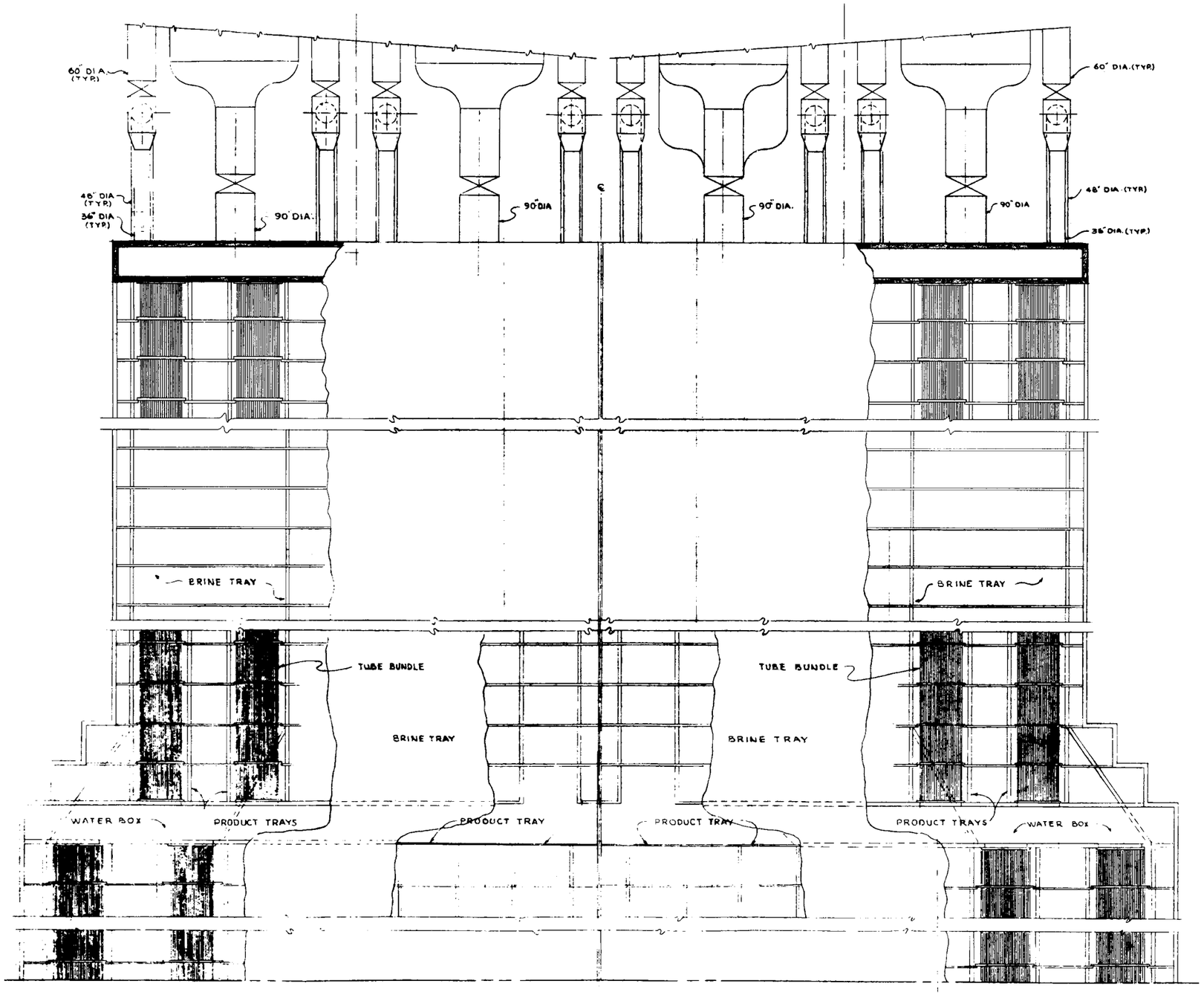

PLAN
SCALE: 1/8" = 1'-0"

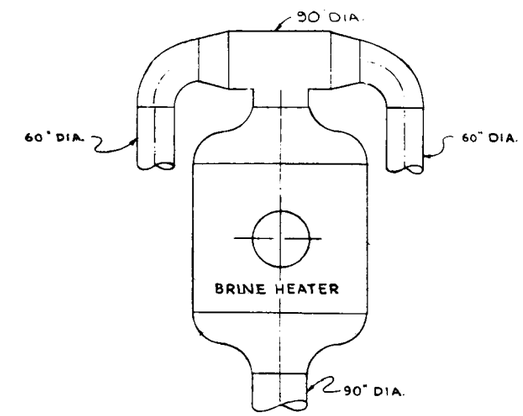

BRINE HEATER PIPING PLAN

Figure 3-7. Evaporator Part Plan

3.3 MECHANICAL

Bechtel Corporation has made an analysis of the mechanical and process features of the Oak Ridge design concept for the large multistage flash desalting facility. For the most part, the process design follows demonstrated mechanical engineering techniques despite the large size of the plant and its components. Summarized below are comments in those areas where Bechtel has suggested revisions to the concepts and criteria originally provided by ORNL.

3.3.1 Decarbonation and Deaeration

3.3.1.1 Reference Plant. The cold end of the plant, including decarbonation and deaeration, is depicted in Oak Ridge drawings No. E-I-34787A1-Revision 3 and No. D-P-34787N-Revision 1. A spray-type combination degasifier and deaerator, operating under vacuum conditions corresponding to a vapor temperature of 91 F, has been designed to aid in the removal of the evolved CO_2, the dissolved O_2, and the other inert gases. Oak Ridge states that the system operating with appropriate steam-jet air ejectors will bring the residual CO_2 level down to 10 ppm and the residual O_2 down to 50 ppb.

Since a lower level of O_2 is desired, probably down to zero ppb, a supplemental chemical scavenging system to feed sodium sulfite to the makeup has been included in the alternative concept. The total makeup feed per 62.5-mgd train is 43.13 million pounds per hour. The quantity of sodium sulfite which must be added is approximately 17 pounds per hour per train. With this requirement, the size of the storage tank is 10,000 gallons. This is the same size as the anti-foam storage tank. As a matter of fact, the physical arrangement of the sodium sulfite and anti-foam systems would be very much alike. Refer to Figure 3-14 and 3-15.

It is recommended that the addition of the sodium sulfite chemical be based on a weight ratio to the quantity of feed, with a manual reset to permit adjustment as required to keep the O_2 content close to zero.

3.3.1.2 Alternative Design. As an alternative to the spray-type vacuum degasifier/deaerator, Bechtel briefly studied the packed-tower design. The large makeup feed flows of a 250-mgd flash desalting plant are greater than those yet experienced by the deaerator firms.

The scheme tentatively proposed consists of fifteen 12-foot-diameter columns per train, complete with vacuum-inducing equipment, probably steam-jet air ejectors. One of the manufacturers contacted has stated that further study would probably indicate that the preferred arrangement would consist of four field-erected cylindrical vessels per train. They added that although the combination decarbonator/deaerator seems to show some slight advantage, they do not rule out the possibility that the ultimate design might be an atmospheric degasifier for CO_2 ejection, followed by the vacuum deaerator to complete CO_2 removal to the desired level, and concurrently remove the O_2 and inert gases. Either arrangement will produce the desired residual levels of CO_2 and O_2 without using a sodium sulfite injection system. Figure 3-10 shows the process arrangement of the packed-tower design. Note that this replaces the integrally constructed deaerator vessel. The total capital cost (excluding client costs) for this alternative design amounts to an increase of $2,732,000 over the reference plant estimate.

3.3.2 Noncondensable Gas Removal in the Reference Plant

In MSF desalting plants built to date, capacities of single evaporator trains, although continuing to increase, have not yet warranted a segregation of recovery section air removal from rejection section/deaerator air removal. In a single train producing 62.5 mgd, the

air ejection equipment is quite large, so that, even if the two systems are separated, the remaining equipment is still large.

Therefore, the conceptual case has been altered to show two inert gas removal networks, one for the recovery vessel and one for the rejection vessel. This revision will facilitate tuning or balancing of the systems. Furthermore, the introduction of air from the heat recovery section into the heat rejection vessel serves no useful purpose but can only adversely affect the heat transfer rate by adding to air blanketing of the exterior surfaces of the condenser tubes.

Ideally, of course, air should be ejected directly to the atmosphere from each stage, but the cost of installing equipment to do this, especially from the vacuum stages, would be prohibitive. Consequently, a series/parallel flow pattern for the noncondensables offers the best solution, and, in large plants, the use of independent vacuum-inducing systems for the recovery and rejection vessels is indicated.

The reference case provides for one hogging ejector for each of two trains, or two units for the 250-mgd plant.

3.3.3 Heat Rejection Section Design in the Reference Plant

The conceptual Oak Ridge computer printouts indicated stage lengths of 43.5 feet and 27.3 feet for stages 49 and 50 respectively. The length of the coldest recovery stage, No. 48, was shown as 13.3 feet. It was agreed that this design could be improved.

The relatively long length of the hotter of the two rejection stages would, of course, produce a low submergence superheat, which is desirable.

Nevertheless, the rather large amount of tubing in this stage would result in a design terminal temperature difference of 3.547 degrees. Bechtel feels that this approach would be unattainable at any time when, for a variety of reasons, excessive amounts of noncondensables were present, causing air blanketing of tube exteriors. Shortening this first rejection stage seems to be a design improvement.

The ORNL reference design now specifies a length of 33.5 feet for stage No. 49 and 34.0 feet for No. 50. This assumes a two-stage rejection section. The decrease in design efficiency of stage 49 to a more realistic level results in a modest drop in overall tube surface area requirement with no decrease in plant production or performance ratio. In addition, the occasional presence of above-normal quantities of air in this vacuum stage will cause a lesser upset in condensation performance than would occur in a tube bundle of low terminal temperature difference.

As an alternative to the two-stage configuration, a three-stage rejection section was examined. There seems to be little difference in performance characteristics. Final selection would necessitate a more thorough analysis.

3.3.4 Alternative Brine Heater Design

The Oak Ridge reference plant's brine heater design specifies an in-tube velocity of 4.5 feet per second. This velocity results in an overall heat transfer coefficient, U, of 658 with a consequent 147,600 square feet of tube area per heater. The configuration is such that shop fabrication of the heaters for rail shipment to the site is not possible because of the large diameter of the shell. Under certain circumstances, barge shipment might be possible.

As an alternative, Bechtel proposes an increase in velocity to 8 fps to increase the heater length-to-diameter ratio and, at the same time, to reduce the surface area requirement through improvement of the inside film coefficient. This change makes shop fabrication practicable.

The following tabulation indicates the principal pertinent heater data for the two velocities, compared at a product water temperature of 85 F. (Comparative data at the 90 F base temperature are not available.)

	Reference Plant	Alternative Case
No. of Heaters	8	8
Velocity, fps	4.5	8.0
Length, feet	24.52	38.05
Surface, sq ft	1,168,000	1,020,000
No. of tubes	242,700	136,520
Heater U	658.0	753.8
Friction Loss, ft	4.05	18.25
Brine Flow, lb/hr	624×10^6	624×10^6

The alternative design permits a reduction in tubing surface of 12.6 percent, but the higher velocity means, of course, a greater pumping power requirement. This added power requirement, which must be considered before a preferred design is selected, is 1250 horsepower per train or a total of 5000 additional horsepower for the 250-mgd plant. If one assumes a unit power cost of 2.5 mills, the cost for 95,000 kwhr per day would be $240. This incremental operating cost must be compared to the savings resulting from lower capital costs of the heaters when designed for the 8-fps in-tube velocity.

The alternative heater design data were submitted to a heat exchanger manufacturer for assistance in arriving at capital cost. Based on the

quotation received, the total capital cost (excluding client costs) of this alternative is a deduction of $2,005,000 from the ORNL reference plant estimate.

3.3.5 Pump Capacity in the Reference Plant

The flow data submitted on the Oak Ridge computer printouts and drawings were design quantities corresponding to design operating conditions. Principally, these conditions were:

Maximum brine temperature	250 F
Seawater temperature	65 F
Product-water temperature	90 F
Steam temperature	254.2 F
Production rate	250 mgd
Seawater concentration	33,600 ppm
Recycle brine concentration	57,860 ppm
Blowdown concentration	67,150 ppm
Performance ratio	12.84

The independent parameter which is subject to the widest variation from the design value is the temperature of the sea. Along the Southern California coast, this temperature will rise about eight degrees above the mean in August and fall about eight degrees below the mean in February.

If the desalting facility is to be allowed to produce a maximum quantity of water from the available steam supply, or, in other words, if full utilization of potential plant stretch is to be permitted, Bechtel suggests specifying 10-percent overcapacity for all process and product pumps. This stipulation will also provide for possible deterioration of pump efficiency between overhauls. It should be remembered, further, that, even when design conditions exist, certain dependent flows will vary to compensate for changes in other flows and liquid levels from the theoretical steady-state quantities. Reference

plant quotations received for the pumps reflect the 10-percent overcapacity.

3.3.6 Air Ejector Circulating Water Pumps in the Reference Plant

The raw seawater pumps, located in the concrete intake structure, furnish water principally to the condenser tubes of the heat rejection sections. A smaller portion, equal to 1.55 million pounds per hour per evaporator train, goes to the condensers of the air ejection system.

Additional pumps, not shown on the original flow sheets, are needed to handle this coolant water requirement. The approximate total dynamic head of these pumps is 20 feet of water. At a design efficiency of 86 percent and using a 10-percent overcapacity allowance, the pump size would be 3300 gpm. It is recommended that these pumps be horizontal, centrifugal, driven by a 20-horsepower motor. Figure 3-10 on page 3-37, shows the schematic location of this pump in a single train. This requirement is included in the ORNL reference plant design.

3.3.7 Reference Plant Tube Bundle Design Evaluation

The use of the elliptical bundles should be more throughly investigated, since the effect of varying lengths of radial travel could result in uneven penetration of the bundle by the saturated steam. This might cause uneven areas of heat transfer throughout the bundle. If elliptical bundles are used, the provision of open lanes of travel could improve condensation characteristics. The circular bundle design presents no difficulties. It may be more economical on an overall basis to increase the height of the evaporator structure in the heat rejection section, and use circular bundles to improve heat transfer rates, with

a resultant lower tube area requirement. Only a more thorough comparison of alternatives could completely determine the best design.

3.3.8 Tube Material and Thickness Comments

The reference case stipulates that all evaporator and heater tubing be 90/10 cupronickel. with 0.049-inch wall thickness in the heat rejection section and 0.035-inch thickness in the heat input and heat recovery sections.

Bechtel believes that data are not yet sufficiently available to substantiate clearly that this selection of material and thickness will assure a 30-year lif or the tubing. Bechtel would prefer to specify, for the time being, that 70/30 be used in the rejection section, where raw seawater comes in contact with the tubes. This preference is based, principally, in the many years of favorable results experienced by the U.S. Navy and the Department of Water and Power of the City of Los Angeles. Admittedly, recent evaluations of the performance of 90/10 in raw seawater indicate that 90/10 is giving completely satisfactory service in many installations.

Also, the criterion of a 30-year life seems to dictate a heavier wall than 20-gauge for the heater and recovery tubing. Bechtel believes that 18-gauge, or 19-gauge at least, should be used if extensive renewal of tubing is to be avoided.

Bechtel has, however, followed the OSW recommendation that the tubing estimate be based on the use of 90/10 exclusively, with 0.049-inch wall thickness in the heat-rejection section and 0.035-inch thickness elsewhere.

3.3.9 Product Water Temperature Comments

The Oak Ridge reference plant's product water temperature is 90 F. This may be unacceptable to many consumers, especially during the summer months when the temperature would approach 100 F in a plant operating on the Southern California coast.

Contrary to the idea that the 85 F plant would require more surface area than the 90 F plant because of the increased surface requirement for product cooling in the heat rejection section, the actual total area is less for the lower-temperature case. The decrease in recovery section area slightly more than offsets the increased need for cooling-tube area in the rejection section. The greater overall temperature span from the hot end to the cold end of the plant, 250 F to 85 F versus 250 F to 90 F, accounts for this slight reduction in area.

Data accumulated during many computer runs indicate that the total area requirement of a multistage flash plant tends to reach a minimum when the temperature of the product water is approximately 18 to 20 degrees above the sea temperature. When a closer approach to the sink temperature is desired, area requirement increases, principally as the result of the lower heat transfer coefficients experienced at the lower temperatures and, of course, as the result of the increased need for tube surface used exclusively for product cooling.

This characteristic is demonstrated on accompanying Figure 3-8, which, although based on an intube velocity of 6 fps, is typical of the trend in area requirement. Figure 3-9 depicts the shape of horsepower and flow curves as a function of product temperature at a constant sea temperature. These curves are based on a 50-mgd capacity MSF single-train plant.

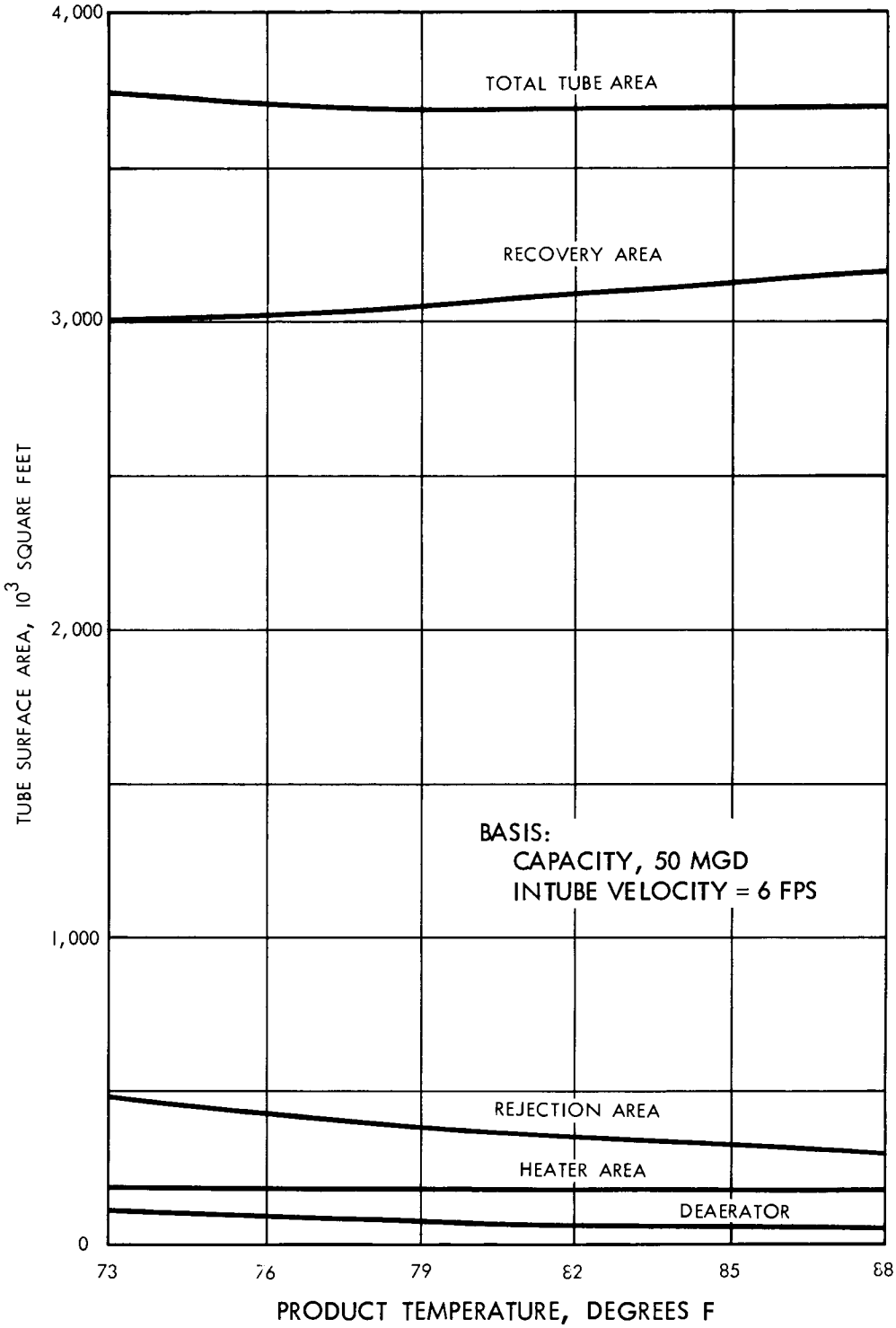

Figure 3-8. Effect of Product Temperature on Surface Area

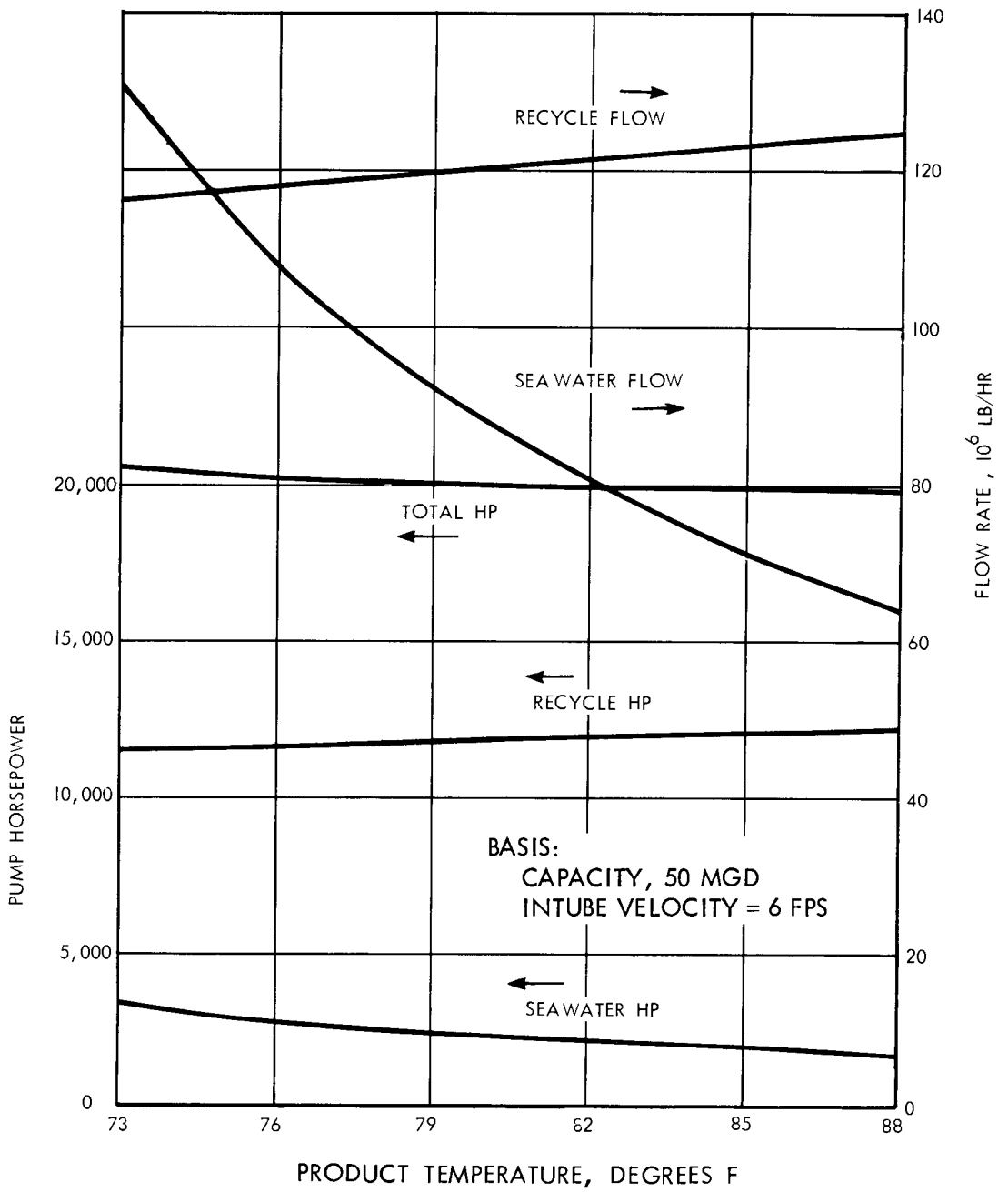

Figure 3-9. Effect of Product Temperature on Pump Horsepower and Flow Rates

It should be remembered, however, that as the design temperature of the product water and, consequently, the temperature in the vacuum deaerator are lowered, the cost of noncondensable gas removal increases. In the final analysis, a compromise must be made between the 90 F specified by the ORNL reference plant and some lower temperature if the lowest product water cost is to be obtained.

3.4 INSTRUMENTATION AND CONTROL

The following discussion presents Bechtel's recommendation for an alternative system of instrumentation and control based on data-acquisition technology, a system offering a high degree of reliability and versatility. The system is one of many available to achieve the exact control scheme desired and is in keeping with present-day practices of plant control in the power industry, the process industries, and various fields of research.

The capital cost estimate given in Table 2-1 (on pages 2-6 to 2-10) shows a cost for instrumentation and control amounting to $1,957,000. This is based on the bills of materials and the drawings of the reference plant design. The cost for the recommended alternative system is given in section 3.4.5.

3.4.1 Philosophy

Steam for operating the multistage flash desalting facility is obtained from the discharge of a back-pressure turbine generator located in the main power generating plant. The generators are considered as base load units, operating fairly continuously at constant output. The operating philosophy of the desalting facility is based, therefore, on there being a relatively constant steam supply available, and on the desalting facility being a turbine-following unit, capable of absorbing the entire

thermal output of the turbine exhaust. The prime objective is to maintain a constant brine temperature at the heater outlet. Variations in steam flow will cause appropriate changes in recycle brine flow to maintain constant brine heater outlet temperature. The autonomy of each train is maintained by isolation of all process lines, control, and power systems. Each train is complete in itself and can operate as an isolated unit.

As shown in Figure 3-10, input seawater is eventually separated into two effluent streams, one of negligible saline content (product water) and one of high saline content (brine blowdown). A number of subcontrol systems, each self-controlling and self-stabilizing, serve to regulate the process stream. Simplicity of design and the use of a minimum number of components maximize reliability.

The entire facility is controlled from the plant central control room. A main control console, composed of four sections, is located here. Each section serves as an isolated control and monitoring center for each of the four trains. Mounted upon each control panel are the indicating devices required for facility startup and shutdown. Automatic/manual selection switches are provided for each control point. During startup and shutdown, any part of the system may be placed on manual control. It is intended that normal operation be fully automatic. If desired, however, elements of the system may be controlled manually. Local control stations are provided adjacent to each operating component (e.g., motors and valves) for maintenance and safety.

The continuity of operation and the routine and repetitive nature of this process lend themselves well to advanced technology in control and operation. To reduce human error and fatigue, minimize maintenance and operation effort, and increase operating efficiency, data-acquisition techniques are used extensively throughout the facility.

3.4.2 Central System Controls

3.4.2.1 Control Room. All controls and instrumentation essential for startup, shutdown, and normal operation of the facility are located in the main control room. Controls required by the operator for control and monitoring are mounted on a control console composed of four sections, arranged semicircularly to provide full visibility within the console area. Each section is desk height with a sloping front suitable for operation from a sitting position.

Upon each section is mounted a multi-colored graphic schematic pattern, representing the process system. Miniaturized control and monitoring devices are incorporated into the graphic pattern, and process variables at measured points in the process stream can be read from a digital display. By depressing an illuminated button at the desired point on the graphic panel, process information is displayed. Any variable wandering off limits causes the illuminated button to flash, and this will draw the operator's attention to the point of discrepancy. An audible signal is also provided to attract the operator's attention. A typewriter printout logs variables while they are off limit, with trending and rate of change easily read from log sheets.

Position indicators show valve positions, and red and green lights show the status of motor drives. Off-norm conditions are indicated by flashing alarm lights. Oxygen, salinity, and pH recorders are mounted on vertical panels nearby.

Electronic process controllers, power supplies, relays, and other electronic items are mounted on auxiliary racks located in an adjacent instrument equipment room.

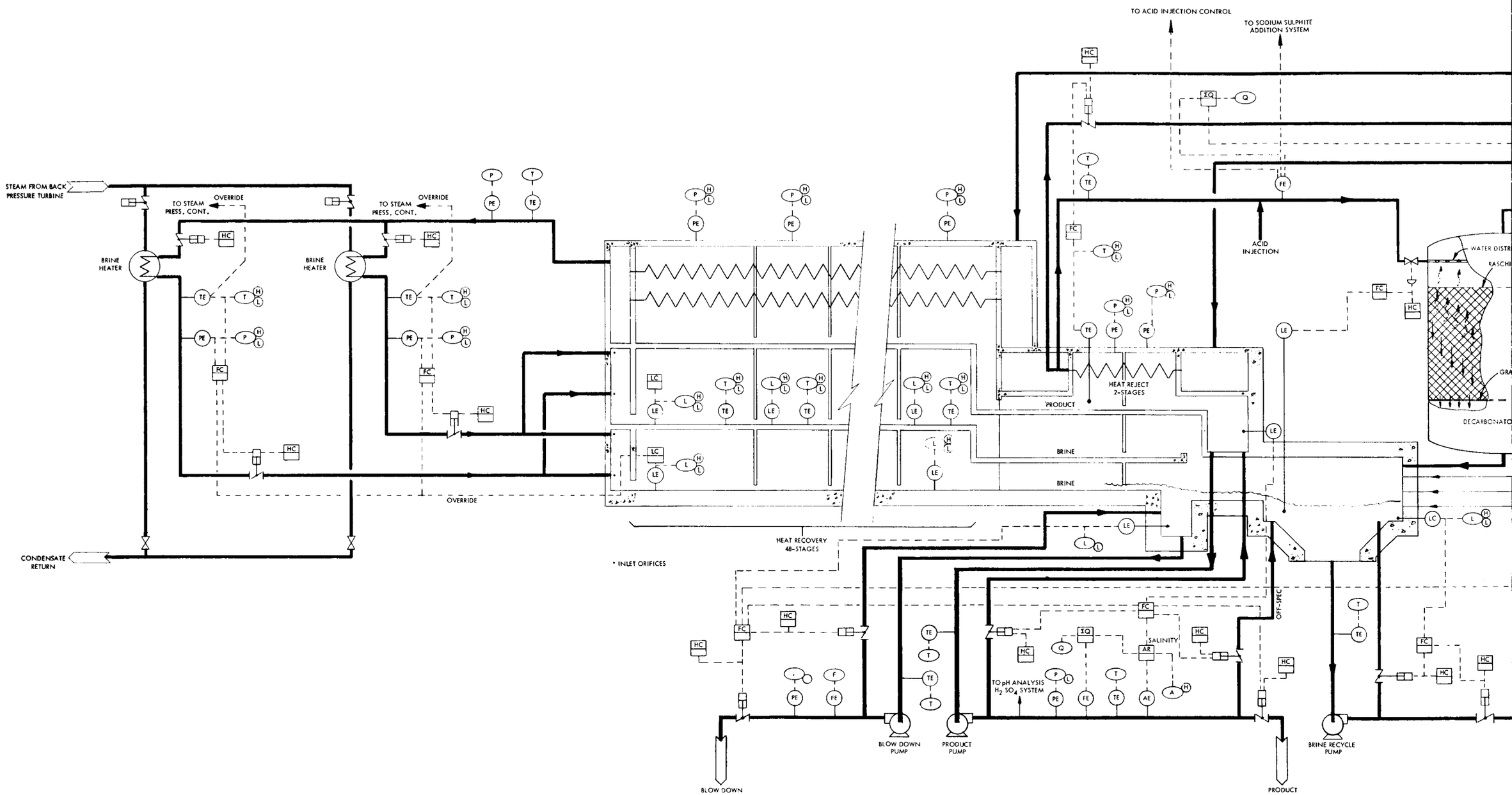
TO ACID INJECTION CONTROL
TO SODIUM SULPHITE ADDITION SYSTEM
STEAM FROM BACK PRESSURE TURBINE
TO STEAM PRESS. CONT.
OVERRIDE
BRINE HEATER
ACID INJECTION
WATER DISTR
RASCHI
GRA
DECARBONATO
HEAT REJECT 2-STAGES
PRODUCT
BRINE
HEAT RECOVERY 48-STAGES
* INLET ORIFICES
CONDENSATE RETURN
OFF-SPEC
SALINITY
TO pH ANALYSIS H_2SO_4 SYSTEM
BLOW DOWN PUMP
PRODUCT PUMP
BRINE RECYCLE PUMP
BLOW DOWN
PRODUCT

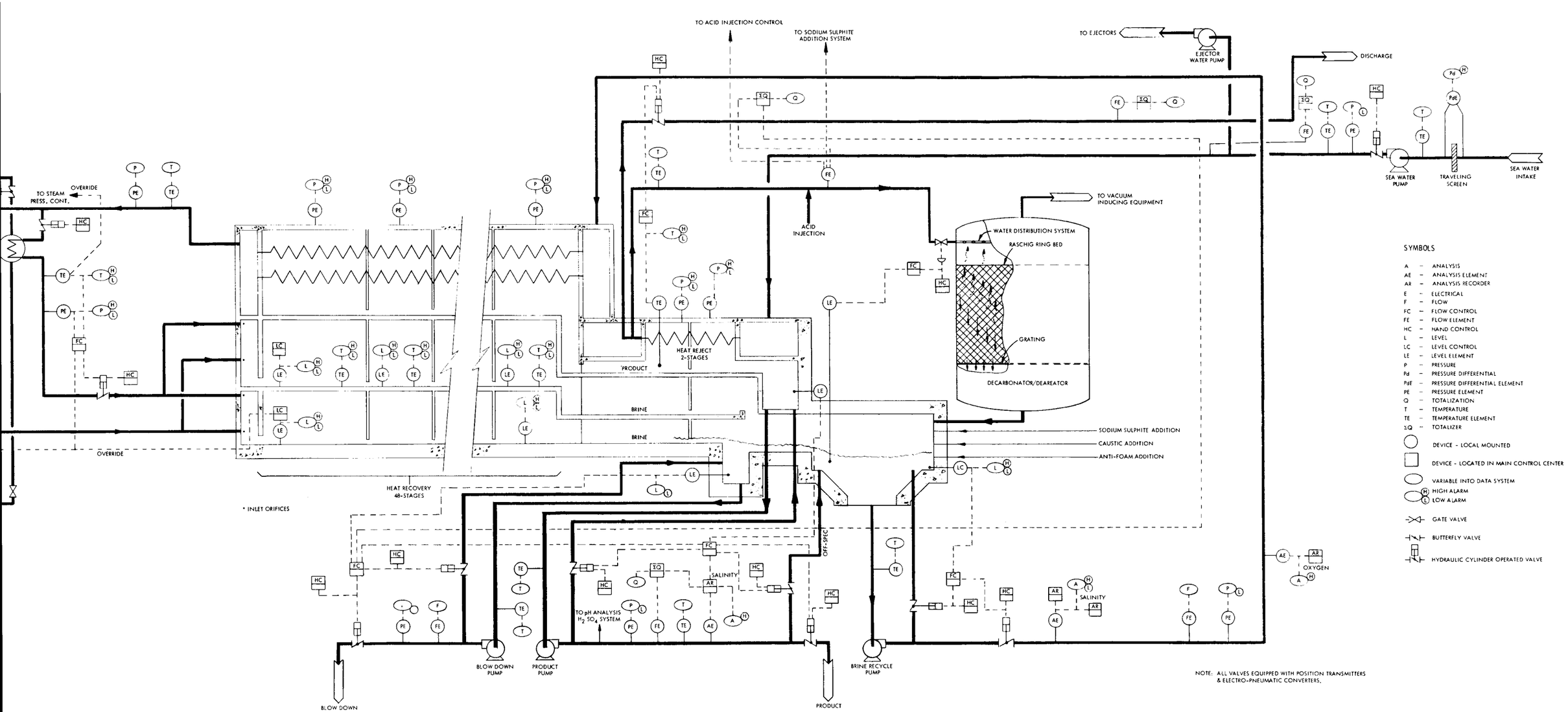

Figure 3-10. Instrumentation and Control Diagram

3.4.2.2 Data Logging. Data-logging techniques have been applied extensively throughout the process facility. (See Figure 3-11.) As a result, the number of recorders, meters, lights, and indicators is minimized.

It should be noted that data logging is limited to the acquisition, indicating, and recording of data only. Computation and control are not a part of this data system. The process is considered a relatively constant flow type, exposed to only a limited number of narrow-range variations and upsets. It therefore appears economically feasible to preserve subsystem integrity by the use of conventional controllers, each limited to the control of its own subsystem. Electronic instrumentation is used throughout to gain the inherent advantages of compatibility with the data-acquisition system and analytical instrumentation, and signal integrity and rapidity of response over long transmission distances.

The data-acquisition system provides the following features:

- In compliance with the unitized concept, maximum isolation is maintained between each of the four trains. This isolation is maintained up to the point of printout. The system printer is common to all four trains.
- On each of the four sections of the control console, a digital indicator displays process variables.
- Input signals, both analog and digital, from the pressure, level, temperature, analyzers, totalizers, flow sensors, and transmitters are connected to the input terminals of the data system.
- Scanning rates are of the order of 60 to 100 points per second. Due to the inherent high hydraulic inertia of the MSF system, memory facilities are not required for recording trending data. The scanning speeds are adequate for recording trending changes in process variables.
- Off-limit conditions are identified by an alarm on the appropriate control section, accompanied by a simultaneous printout of the off-limit variable.

- The operator can view on the digital display the status of any point within the system. During startup, operation, and shutdown, the operator can have immediate access to the system variables and equipment status.
- Continuous analysis is maintained on designated flow streams. These streams are alarmed for off-limit conditions with off-limit printout.
- Seawater and product water input/output data are totalized and available on demand by printout for use in determining plant operating efficiency and for accounting purposes.

3.4.3 Process Subsystem Control

The power plant is considered a base-load system operating continuously at a constant load level. From the standpoint of the power plant, the desalting facility acts as a heat-dissipating system for the main turbine exhaust. Normal operation is based on a constant steam supply to the brine heaters and a constant brine temperature at the brine-heater outlet. To facilitate startup, shutdown, and normal operation, the operator may make a control function either manual or automatic.

The process subsystems are described in the following subparagraphs.

3.4.3.1 Seawater Inlet. Seawater supply to the facility is drawn from the intake basin through trash racks and traveling screens to the seawater pumps. Discharge water from the pumps is carried through a main isolating valve to the inlet water box of Heat Rejection Stage 50. This manually controlled valve isolates the seawater inlet from the facility and is usually wide open. When trash builds up on the traveling screens to a predetermined level, differential sensors across the screens actuate the screen drives and screen wash devices. Instrumentation measures pump discharge pressure, temperature, and flow. These variables are logged in the main control room with required alarms.

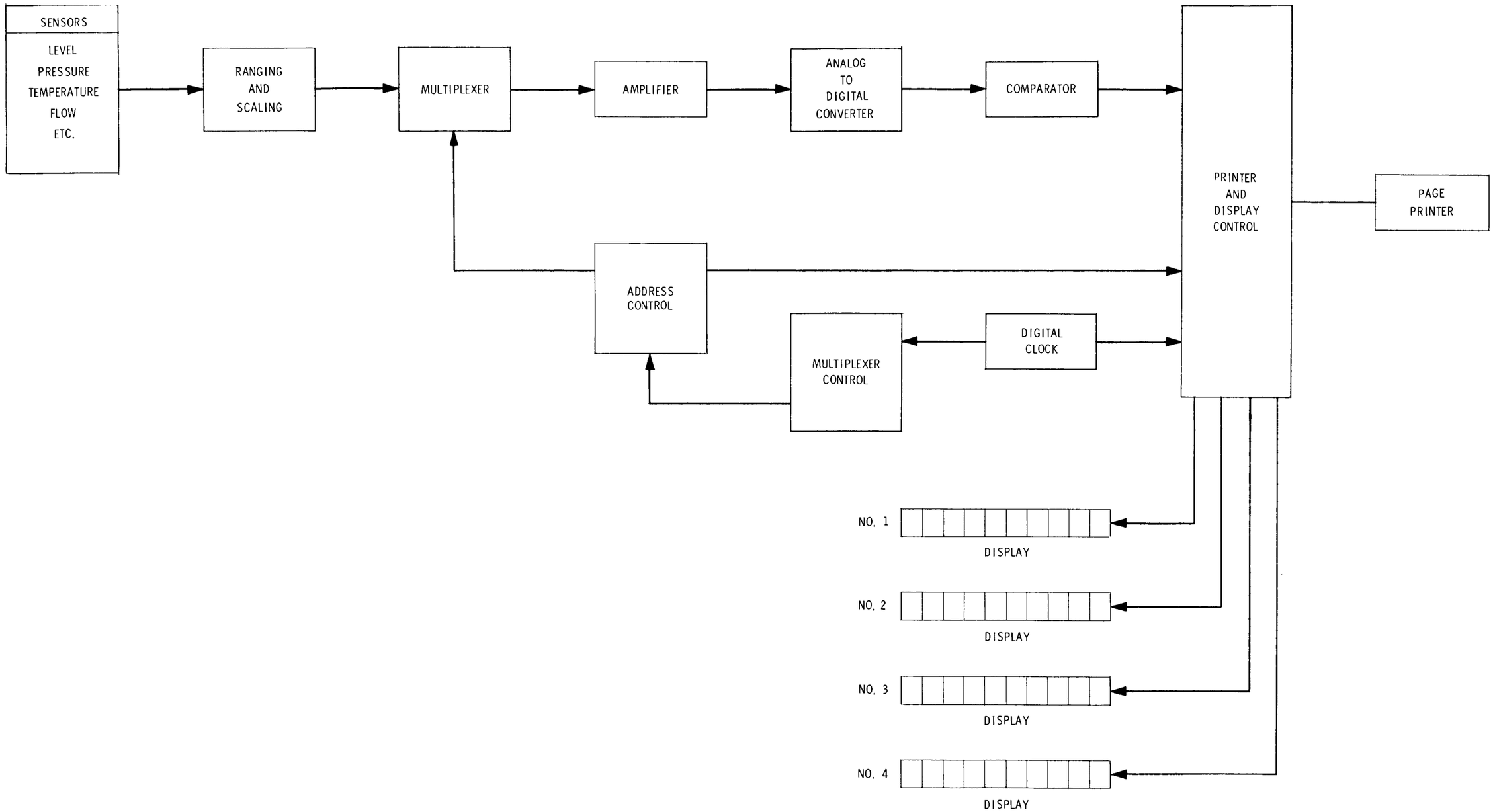

Figure 3-11. Data Acquisition System Block Diagram

3.4.3.2 Heat Rejection Stages 49 - 50. Instrumentation provides pressure and temperature measurement of both stages with both variables logged and alarmed.

3.4.3.3 Seawater Effluent Stream. Inlet seawater is split into two streams at the discharge end of the rejection tube bundles. The rate of flow of the seawater stream regulates the temperature of the cold end of the plant, Stages 49 and 50. Stream flow rate is controlled by a valve in the discharge line. A temperature sensor in the rejection stages positions the control valve to the proper flow rate for maintenance of the desired cold end temperature. Instrumentation measures temperature and flow and logs both variables, including integration of stream flow.

3.4.3.4 Seawater Makeup Feed Stream. Seawater makeup from the outlet of the rejection bundles flows to the decarbonator/deaerator. Level sensors in the recycle brine sump position the inlet valve to control the rate of flow of makeup water. Sulfuric acid is injected into the makeup stream just prior to entry into the decarbonator to break down the bicarbonate alkalinity. Instrumentation measures stream temperature and flow, and logs both variables.

3.4.3.5 Brine Recyle System. The brine recycle stream is pumped by the recycle pump to the heat recovery inlet water box of Stage 48. The system normally operates under full pressure, with flow rate controlled by the brine heater discharge control valves. During startup, shutdown, or periods of system upset, the flow rate may be varied manually by means of the brine recycle stream control valves. A pump recirculation line is provided to assure flooded pump intake to the brine recycle pump and provide recirculation during startup. A valve in this line controls the flow; level sensors in the recycle brine sump determine the position of the valve during startup. Instrumentation measures temperature, pressure, flow, oxygen content, and salinity. These variables are logged with recorders provided for analyzed variables. All necessary variables are alarmed.

3.4.3.6 Brine Heater System. The brine heaters in each train are arranged in two separate systems independent from one another. Brine from the tubes of the heat-recovery vessel enters the brine-heater inlet through manually controlled isolating valves. Heated brine from the brine heaters flows through a control valve to the bottom section of the evaporator vessel. This stream is split at the vessel entrance into two streams — one to the upper brine tray, and the other to the floor of the structure.

The valves downstream of the brine heaters control the flow rate so as to maintain a constant brine-heater outlet temperature to the evaporator. The setting of the valve depends upon the temperature of the brine leaving the heater. Should flooding occur within the evaporators, level sensors will produce an override signal to adjust the control valve to the proper flow rate. During startup, shutdown, and system upset, the temperature sensor in the brine line transmits an override signal to the turbine plant steam control system for possible corrective action.

Instrumentation measures temperature and pressure in both the brine heater inlet and discharge lines. All variables are logged with alarming of the discharge line variables.

3.4.3.7 Evaporator Vessels. One of the three process streams flowing within the evaporator is product water; the other two are brine. Product water is collected in a trough located directly below the tube bundles, and brine flow is confined to the elevated tray and the evaporator floor basin. Each stage is an isolated chamber, with stage integrity maintained by manually adjustable orifices in each flow stream, located at the stage interface. Liquid level is maintained at a sufficient depth to prevent blowby of vapor between stages. Instrumentation in each of the 48 stages measures and logs pressure, temperature, and upper brine tray level. Level sensors are provided on the evaporator floor basin in Stages 1 and 48. All of the above variables have high and low alarms.

3.4.3.8 Blowdown System. A measured amount of residual brine is discharged to the blowdown sump at Stage 50. Concentrated brine equal to the difference between the makeup water and the product discharge is returned by the blowdown pump to the sea. Overflow of concentrated brine from the blowdown sumps passes to the deaerator sump, where it blends with the incoming makeup water. The combined stream then enters the brine recycle system already described. A valve in the discharge line controls the blowdown discharge rate. A control signal from the makeup line adjusts this valve to vary the rate of blowdown proportionately to the rate of makeup and rate of discharge of product water.

To assure a flooded intake to the blowdown pump during startup, a pump recirculation line is provided to the blowdown sump. The pump recirculation rate is controlled by a valve which is adjusted by a low-level sensor in the blowdown sump. This valve may also be adjusted manually. Instrumentation measures pressure, temperature, and flow, and provides alarms for off-limit conditions.

3.4.3.9 Product Water System. Product water is collected in the product water sump and flows to the intake of the product water pump. This stream is discharged to the product water system, or, if salinity is above specification limits, returned to the deaerator sump for reprocessing. Direction of flow is determined by a salinity analyzer which positions either the product discharge or off-spec return control valves in accordance with the salinity content of the product water.

During startup, shutdown, or periods of system upset, the stream flow, direction, and rate may be controlled manually by means of the product and return line control valves. During startup, to assure a flooded intake to the product pump, a pump recirculation line is provided.

A low-level sensor in the product sump provides an override signal to the system control valves to maintain the desired sump level. Instrumentation measures pressure, temperature, flow, and salinity. Flow is totalized by the algebraic sum of the flows through the off-spec return line and the product discharge line, whereby the net discharge of product water only is recorded. All variables are logged, and alarms are provided for off-limit conditions.

3.4.3.10 Caustic Addition System. The caustic addition system (Figure 3-12) is similar to that shown on Oak Ridge Dwg. C-I-3478744 except that pressure, flow, and level variables are inputs to the data-logging system.

This system is composed of a caustic storage tank feeding a single caustic supply system, common to all four trains. Two chemical pumps (one serving as a spare) supply caustic to a constant pressure header. From this header, caustic is fed to an inlet point in each of the four deaerator sumps.

Flow rate signals from the pH analyzer in the recycle brine line serve to position the control valves in the caustic injection lines to each deaerator. Instrumentation includes pressure, flow, level, and pH analysis. All variables are logged, and alarms are provided for off-limit conditions.

The system normally functions in the automatic mode. Variations in caustic flow rate may be manually controlled, however, from the main control console.

3.4.3.11 Acid Addition System. The acid addition system (Figure 3-13) is similar to that shown on Oak Ridge Dwg. C-P-34787M, except that pressure, flow, and level variables are inputs to the data-logging system

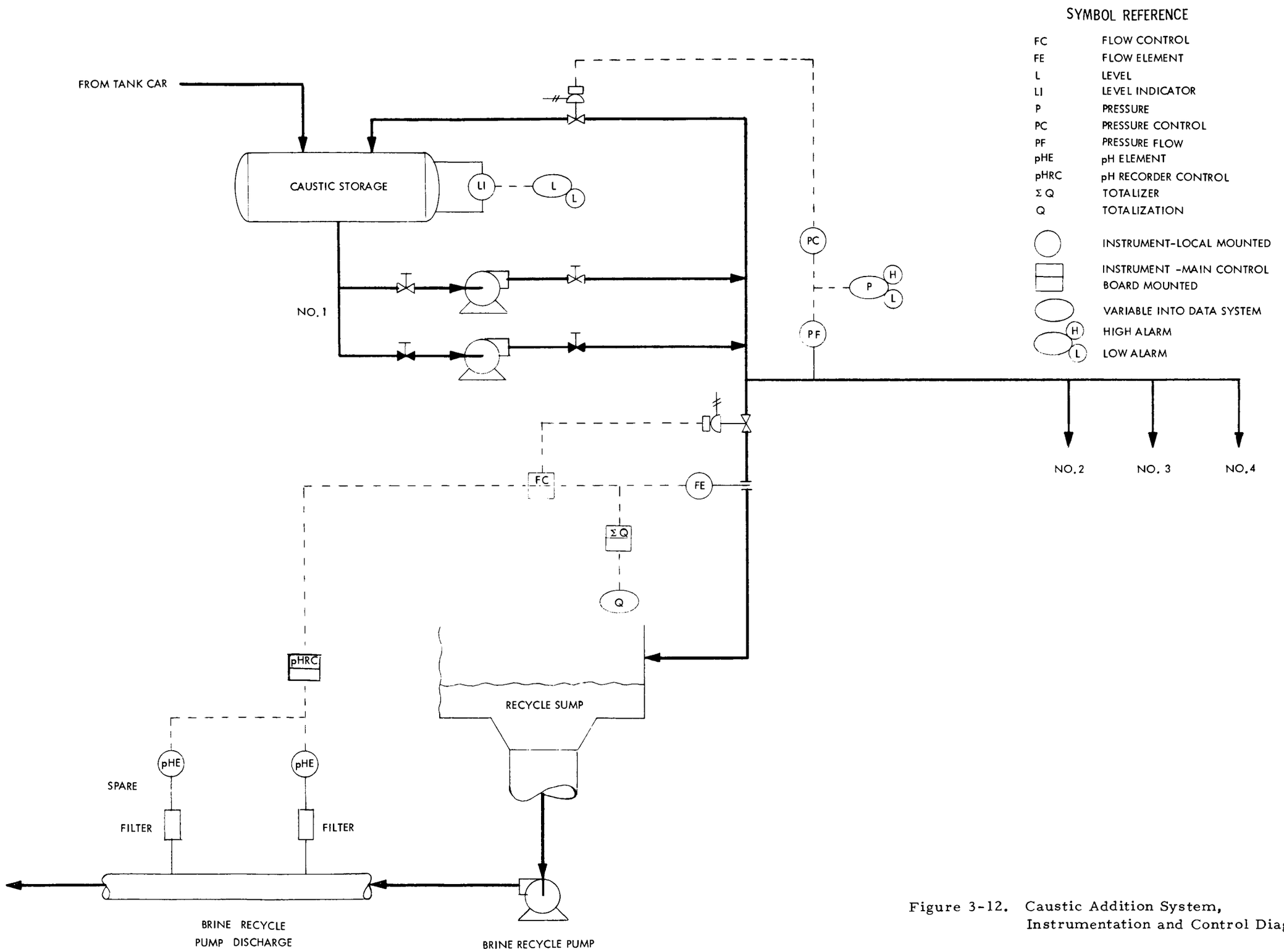

Figure 3-12. Caustic Addition System, Instrumentation and Control Diagram

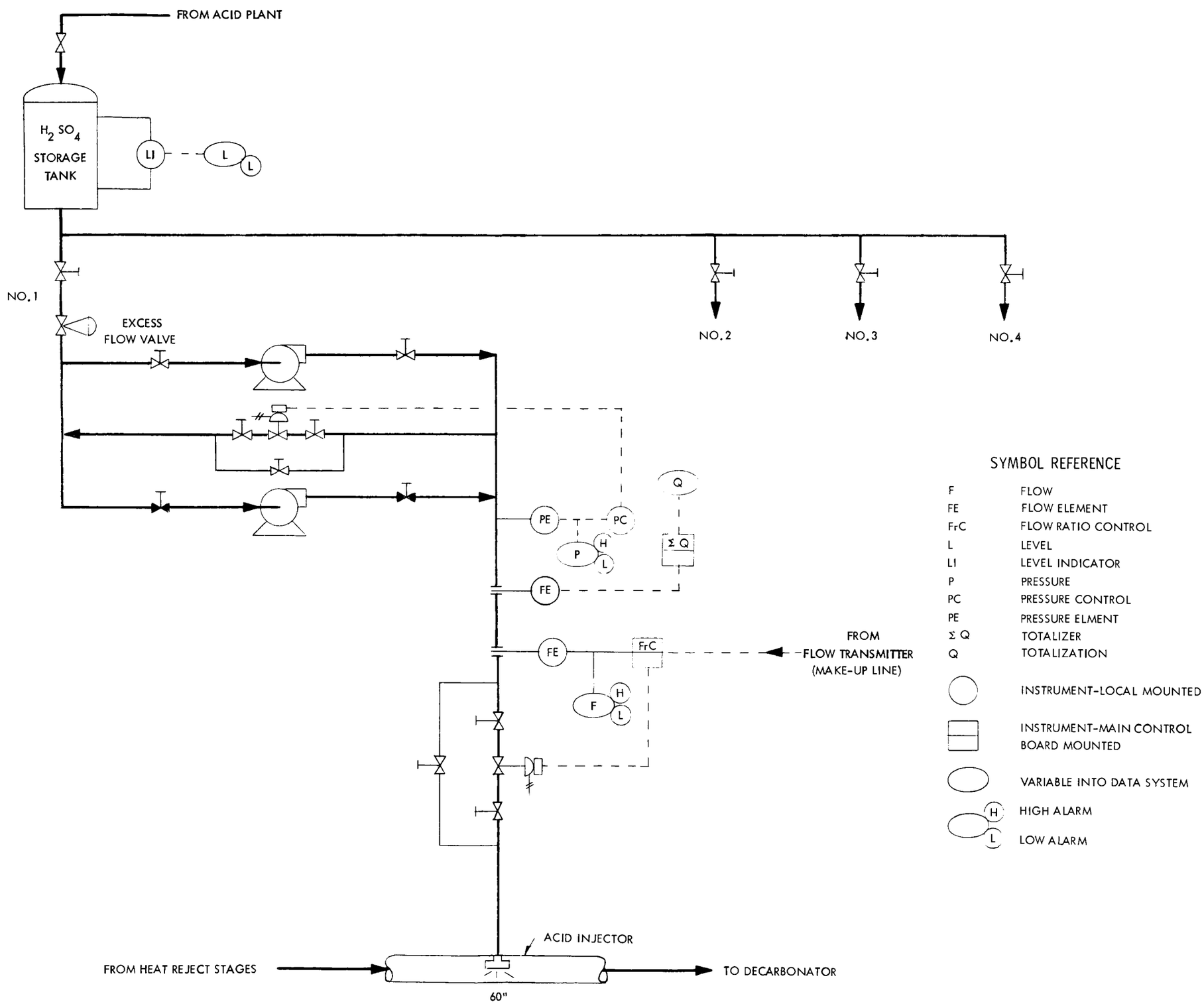

Figure 3-13. Acid Addition System, Instrumentation and Control Diagram

This acid addition system is composed of a storage tank feeding four identical subsystems separately supplying each of the four evaporator trains. Each subsystem is composed of two chemical pumps (one serving as a spare). The systems function as constant pressure systems to maintain a constant head pressure at the injection flow-control valves. Injection nozzles located in the makeup feed header to the decarbonator/deaerator serve to disperse acid into the makeup stream. Control signals from the flow controller in the makeup line position the control valve in the acid supply line in proportion to the makeup flow rate.

Instrumentation measures level, pressure, and flow. All variables are logged, and alarms are provided for off-limit conditions. The system normally operates in the automatic mode with acid injection rate a direct function of the makeup rate. Variation of acid flow rate may be manually controlled, however, from the main control console.

3.4.3.12 Anti-Foam Addition System. The anti-foam addition system (Figure 3-14) is similar to that shown on Oak Ridge Dwg C-I-34787 A3 except that pressure, flow, and level variables are inputs to the data-logging system. The devices and elements of this system are arranged in the same manner as those in the caustic addition system; only the size and ratings vary. The storage tank is different because it was designed as a combination mixing-storage tank.

3.4.3.13 Sodium Sulfite Addition System. Sodium sulfite, in powder form, is blended with deaerated brine in a batch-mixing tank to form an aqueous solution. This solution is pumped to the sodium sulfite storage tank for continuous feed to the four evaporator trains. Two metering pumps (one to serve as a spare) located on each train control the rate of flow to the recycle brine sumps. (See Figure 3-15.)

Flow rate may be varied manually from the main control console. Flow and level variables are logged, and alarms are provided for off-limit conditions.

3.4.3.14 Seawater Chlorination System. The seawater chlorination system (Figure 3-16) is similar to that shown on Oak Ridge Dwg. D-I-34787 A6, except that pressure, flow, temperature, and residual chlorine analysis are inputs to the data-logging system. This system is composed of two identical half-capacity systems. A railroad tank car serves as a backup chlorine storage facility for both systems.

Chlorine is fed in liquid form to steam-heated vaporizers, then in vapor form to the seawater ejectors where it is blended with seawater. This solution then flows to the distribution header for injection into the facility intake seawater lines. Control valves throughout the system serve to control material flow and temperature. Residual chlorine analyzers, located in the ejector seawater inlet lines, monitor the chlorine content of the seawater. Rate of flow of chlorine can be manually adjusted from the main control console. Critical variables are logged, and alarms are provided for off-limit conditions.

3.4.4 Discussion of Modifications to Reference Plant Design

During the design-cost study of this project, several opportunities for cost reduction appeared. The following discussion is intended to describe and explain the proposed modifications to the reference plant design, the first two regarding facility-wide modifications, the remainder affecting process subsystems.

3.4.4.1 Extended Use of Data-Acquisition Techniques. The extensive use of data-handling methods (para. 3.4.2) in a process facility of this type reduces the number of recorder and indicator devices required.

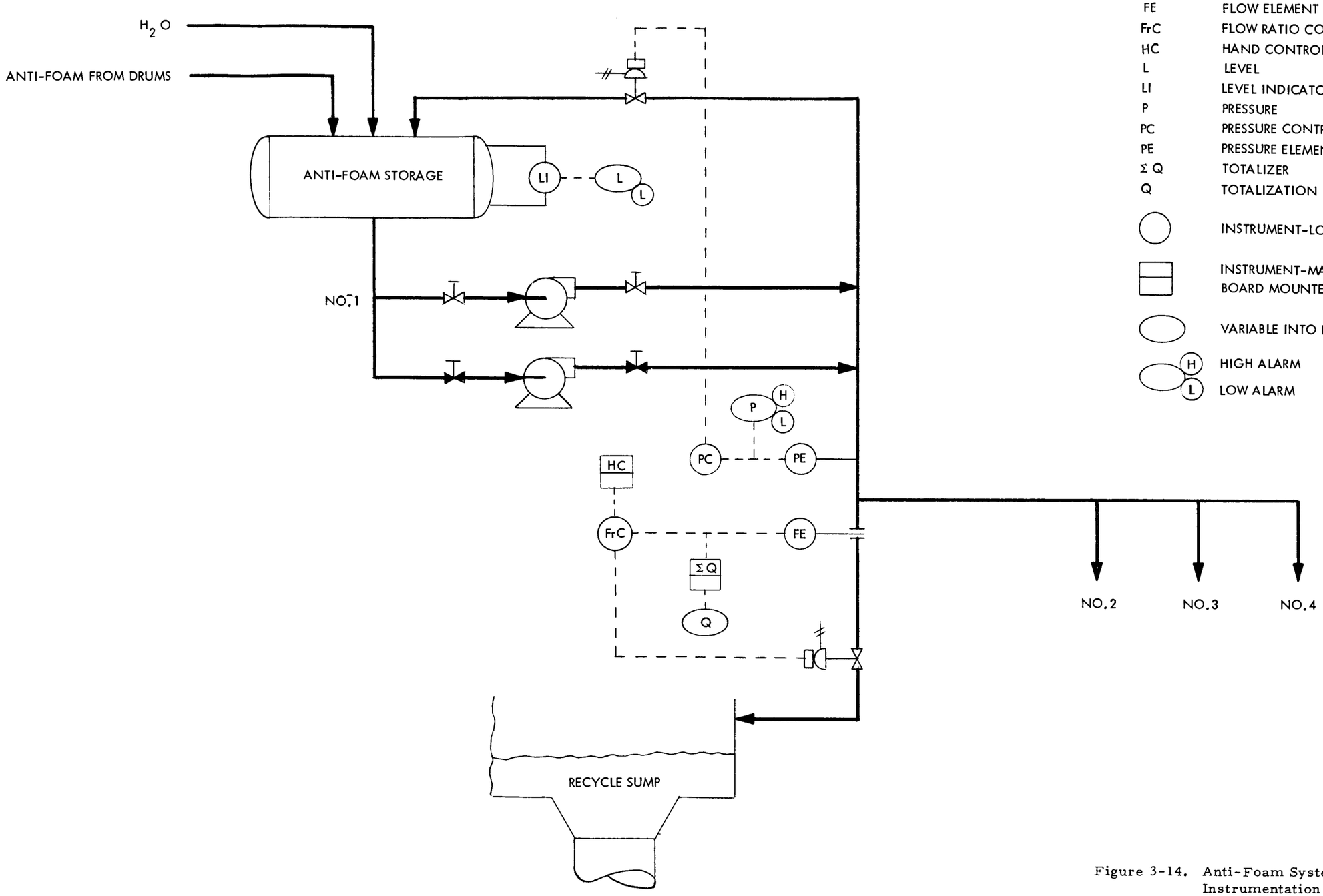

Figure 3-14. Anti-Foam System, Instrumentation and Control Diagram

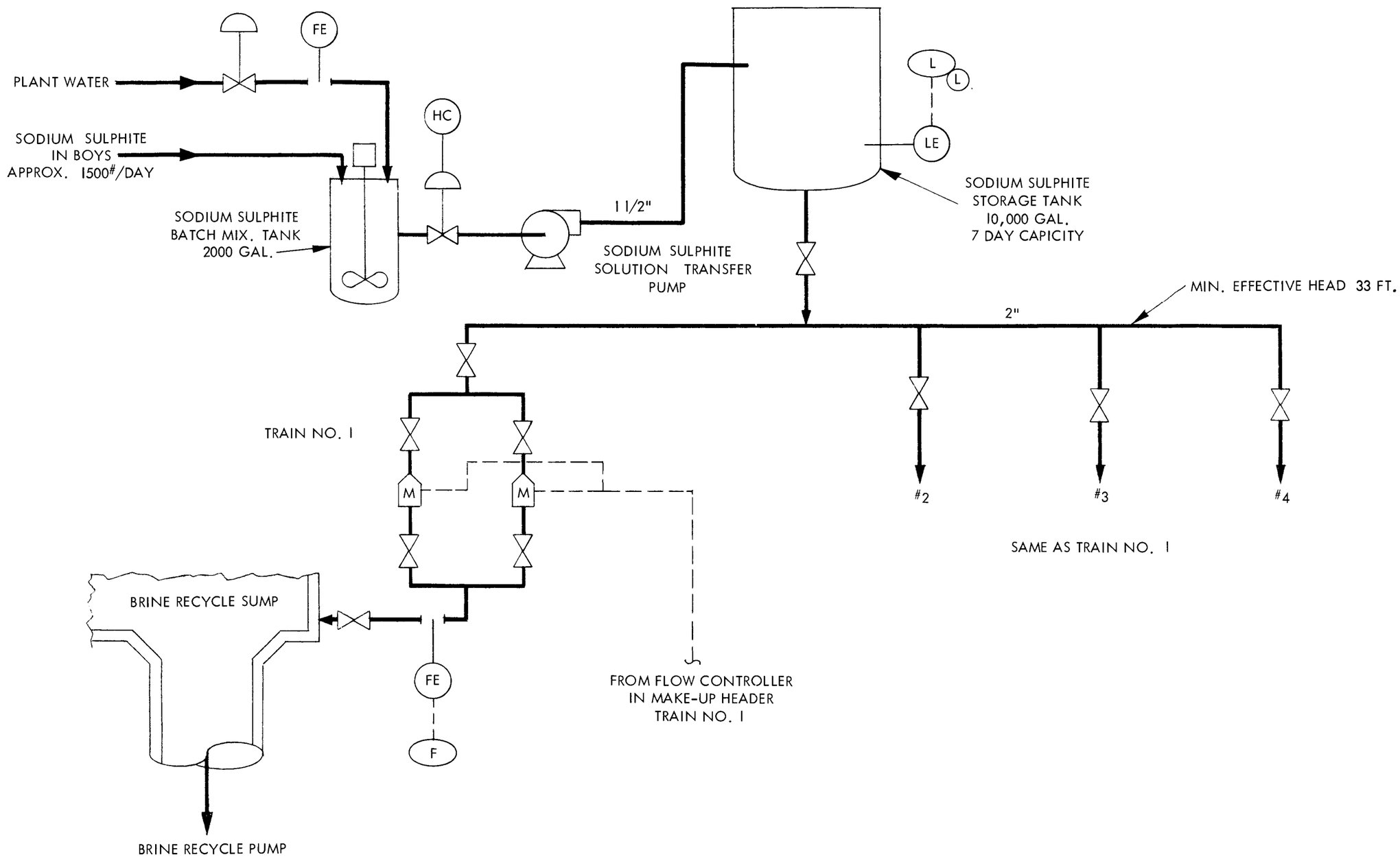

Figure 3-15. Sodium Sulfite Addition System, Instrumentation and Control Diagram

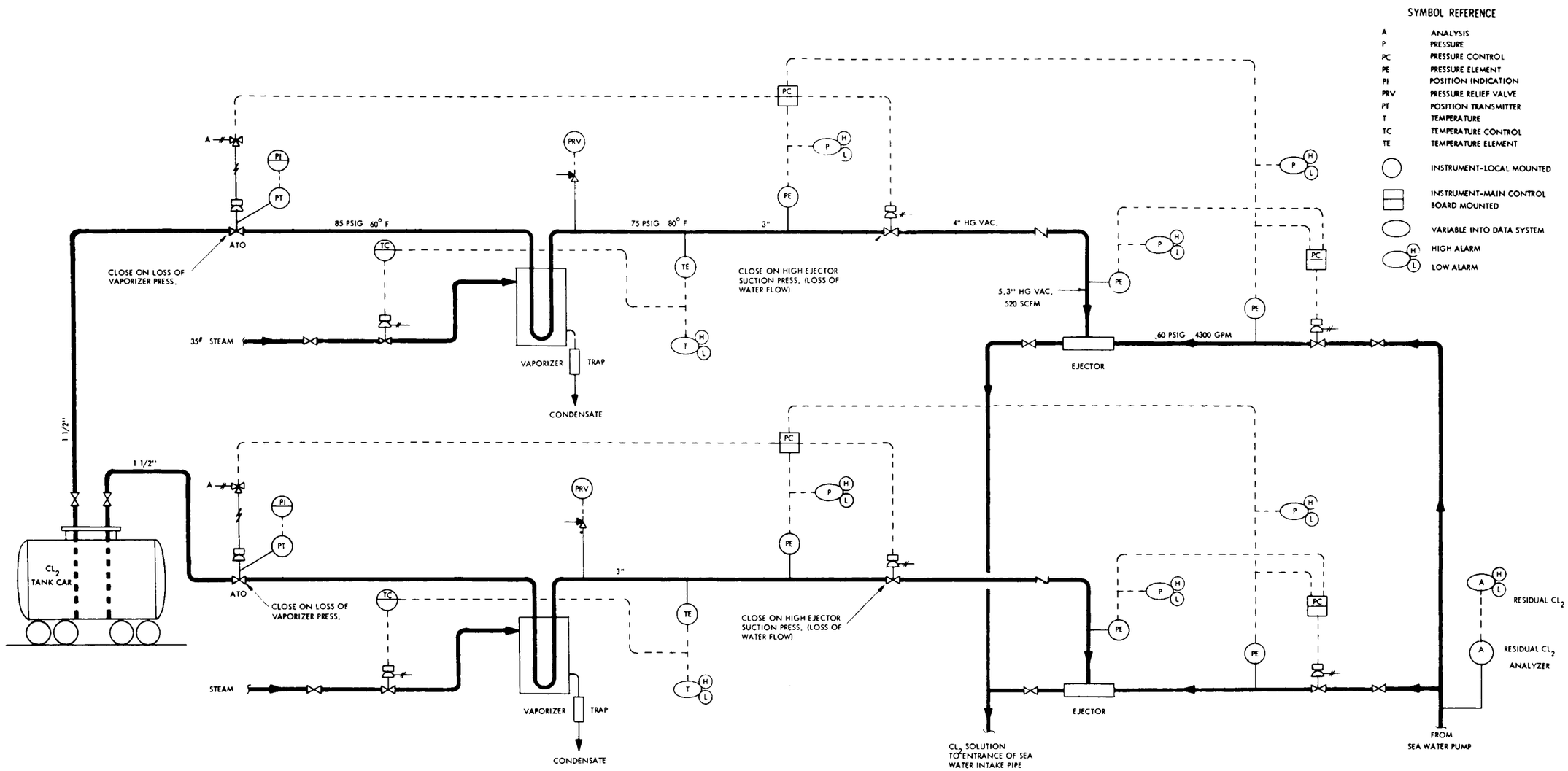

Figure 3-16. Seawater Chlorination System, Instrumentation and Control Diagram

As a result, control board space is reduced to a degree whereby facility control devices can be placed upon a central control console. Control from such a console increases operator efficiency and accuracy and decreases operator effort.

Information on variables is readily available at the push of a button. Permanent records, when desired, are also available at the push of a button, thus eliminating the continuous workload of monitoring records, etc.

3.4.4.2 Pipe-Line Flow Measurement. Rate of flow within pipe lines may be measured by means other than the use of plastic flow tubes. Line flow measurements can be made by the use of a flow tube array. In essence, the flow element consists of a group of Pitot-type tubes arranged symmetrically in one plane about the inner pipe wall. The differential pressure developed across these tubes is sensed by the pressure transmitter. The use of this type of flow element will result in a considerable cost savings in facility instrumentation when compared to large plastic tubes. The functions of recording, indicating, and alarm have been assigned to the data-logging system. Therefore, essentially all of the separate devices for these functions have been eliminated. Only records for stream analysis are retained for operating purposes.

3.4.4.3 Seawater Inlet. The traveling screen differential pressure recorder is eliminated in favor of data-logging this variable. The 24-inch heat-rejection seawater bypass line is eliminated in accordance with the alternative design of the decarbonator/deaerator system. To facilitate plant operation, an inlet seawater totalizer has been added to furnish information on total input of seawater.

3.4.4.4 Seawater Effluent Stream. Control of the seawater effluent stream by line pressure is eliminated and replaced by heat rejection

stage temperature control. Since this system is pressurized by the seawater pumps, temperature control of the heat rejection stages can best be obtained by temperature sensing within the rejection stages.

3.4.4.5 Seawater Makeup Feed Stream. To eliminate surging within the brine recycle collecting basin during startup, shutdown, system upset, and off-spec product-water return, control of makeup rate by product-blowdown totalization has been eliminated. Due to the long-time constants of the system, control by totalization could produce flooding or starvation conditions within the recycle pump sump. Development of either condition could throw the process into an unstable mode.

To maintain subsystem isolation and self stablizing capabilities, system makeup is controlled by level sensors within the brine recycle collecting basin.

3.4.4.6 Deaerator. Redesign of the alternative deaerator system has eliminated the need for the circulating system. Thus, the pump, piping, controls, and instrumentation have been deleted.

3.4.4.7 Brine Recycle System. To maintain full pressure in the brine recycle system at all times, the brine heater outlet temperature control of the brine recycle pump discharge flow has been eliminated.

The control valve in the recycle pump discharge line serves only to control pump recirculation to the brine recycle sump during periods of start-up and system upset. Control of recycle line pressure is discussed in paragraph 3.4.4.8, following. Should the recycle sump level fall below the low limit point, level sensors in the sump will position the recycle brine control valve and the recirculation brine control valve to recirculate a proportionate amount of brine to maintain sump level. Pressure sensors have been added to monitor pump discharge.

An oxygen analysis sensor and recorder furnish the operator with information for controlling the rate of sodium sulfite addition in order to maintain the required minimum level of oxygen concentration in the brine recycle stream.

3.4.4.8 Brine Heater System. To prevent flashing within the brine heater, the brine stream must be under constant full pressure. Therefore, control of the flow rate of the brine stream by varying the position of the brine recycle pump discharge control valve has been eliminated.

The brine stream functions as a constant temperature and variable flow system. The brine stream flow rate is therefore controlled by the brine heater discharge flow control valve. Temperature sensors in this line position the control valve to maintain constant brine temperature.

To prevent brine heater flashing during startup or system upset, a pressure signal to the flow controller serves as an override signal which restricts the control valve operation to a minimum opening in accordance with brine stream temperature. To prevent flooding the inlet stage of the evaporator vessel, a level sensor in Stage 1 issues an override signal to the brine stream control valve and limits inlet brine flow to a point compatible with evaporator flow rates. Temperature and pressure sensors have been added to the brine heater inlet line for monitoring purposes.

A control valve in the brine heater inlet line serves as an isolatory valve, hand-controlled by the facility operator. Should the brine stream flow rate decrease for any reason, with full steam flow to the heaters, the brine temperature will exceed 250 F. A temperature-override signal has therefore been provided for use in the turbine plant steam-flow regulator.

3.4.4.9 Blowdown System. To permit the blowdown system to recognize the level of the brine stream, hand control of the blowdown pump discharge control valve has been eliminated.

Blowdown rate is in direct proportion to the makeup water rate. Therefore, positioning of the blowdown control valve is in accordance with instructions from the makeup flow totalizer. A level sensor in the blowdown sump maintains a required sump level during startup, shutdown, and system upset.

This level sensor positions the pump discharge control valve and the recirculation control valve in proportion to rate of level change in the sump. Line pressure serves to monitor pump operation.

3.4.4.10 Product Water System. The rate of discharge of product water is dependent upon rate of evaporation and the specified salinity limit. Operation of the product discharge valve and the off-specification product water valve has been automated and hand control eliminated.

Level sensors in the product-water sump serve to position the discharge control valve. Rate of flow of product water is therefore consistent with sump level (i.e., rate of evaporation). A salinity analyzer monitors the product stream. A rise in salinity beyond the specification point will cause the discharge control valve to close and open the off-specification product return control valve, returning the off-specification product to the brine recycle sump for reprocessing.

A totalizer in the main product line sums both lines algebraically and records the net amount of water discharged to the use system. A pump recirculatory line maintains desired sump level.

3.4.4.11 Chemical Addition Systems. The systems listed below remain essentially the same as shown on the reference plant drawings, except as follows. All recorders and indicating instrumentation have been eliminated. Information originally intended to be shown by these devices is now processed by the data-handling system.

- Caustic Addition System
- Acid Addition System
- Anti-Foam Addition System
- Seawater Chlorination System

3.4.5 Costs

The costs for the alternative instrumentation and control system described in subsections 3.4.2 and 3.4.3 above are based on new bills of material that are submitted under separate cover. The total capital cost (excluding client costs) for this alternative approach is a deduction of $178,000 from the ORNL reference plant estimate.

3.5 ALTERNATIVE ELECTRICAL SYSTEM

3.5.1 System Description

The electrical power system is composed of five separate systems, one system for each of the four trains, and one system feeding the sulfuric acid plant. Figures 3-17 and 3-18 show one-line diagrams of the alternative system and the reference plant design respectively. The following discussion is concerned with the alternative system only.

Each system is a separate self-contained unit, and a disturbance of one system will not disrupt adjacent systems.

Power is obtained from the main switchyard 13.8 kv bus. The main circuit breakers for each system are located in the main containment in a walk-in outdoor metal-clad enclosure.

Power is transmitted from the main breakers via an underground cable system to the 13.8 kv load centers located adjacent to each of the train structures.

To minimize the number of underground cable runs, the brine recycle pumps are connected to the incoming stub bus on each train load center.

Since the loss of any major component within a train will result in a total shutdown of that train, the main switchyard circuit breaker also acts as a primary breaker to the 13.8 kv - 4160 volt power transformer.

Power is fed downward to progressively lower voltage buses: 4160 volts, 480 volts, 120/208 volts.

Connected to the 4160-volt bus are the larger motor loads and the 4160 volt - 480 volt power transformers. The 4802 bus contains the crane, traveling screen, screen wash pumps and miscellaneous loads, including the 480 volt - 120/208 volt lighting transformer. The 120/208 volt bus supplies power to all lighting control and small miscellaneous loads. Power for the sulfuric acid plant is obtained from the main switchyard bus and transmitted to the acid plant via underground cables to the acid plant load centers.

All underground cable power and control runs are separated from each other to limit noise and interference on the instrumentation and control circuits.

All load centers are installed in outdoor weatherproof enclosures.

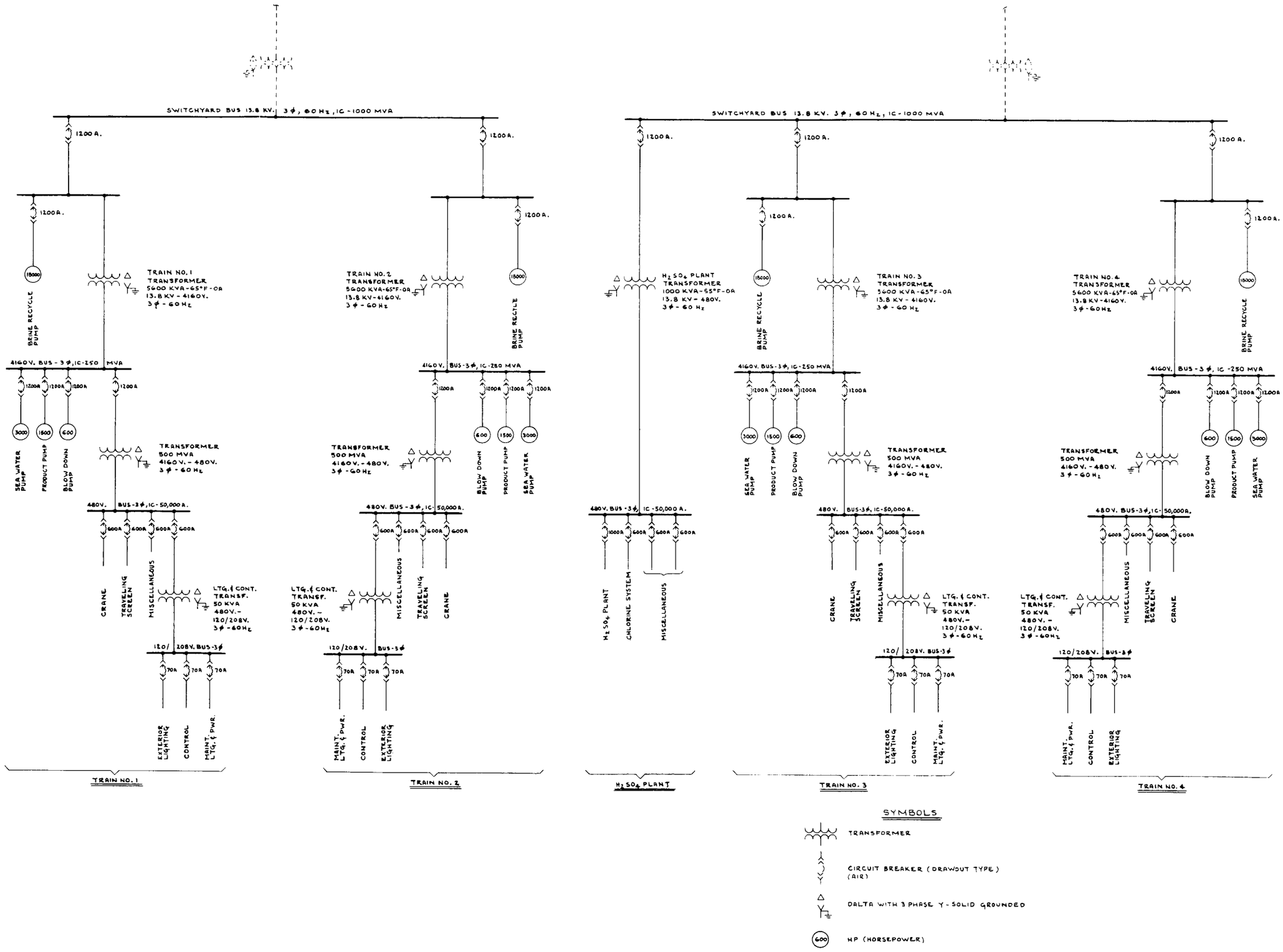

SYMBOLS

TRANSFORMER

CIRCUIT BREAKER (DRAWOUT TYPE) (AIR)

DELTA WITH 3 PHASE Y - SOLID GROUNDED

600 HP (HORSEPOWER)

Figure 3-17. Electrical One Line Diagram, Alternative Design

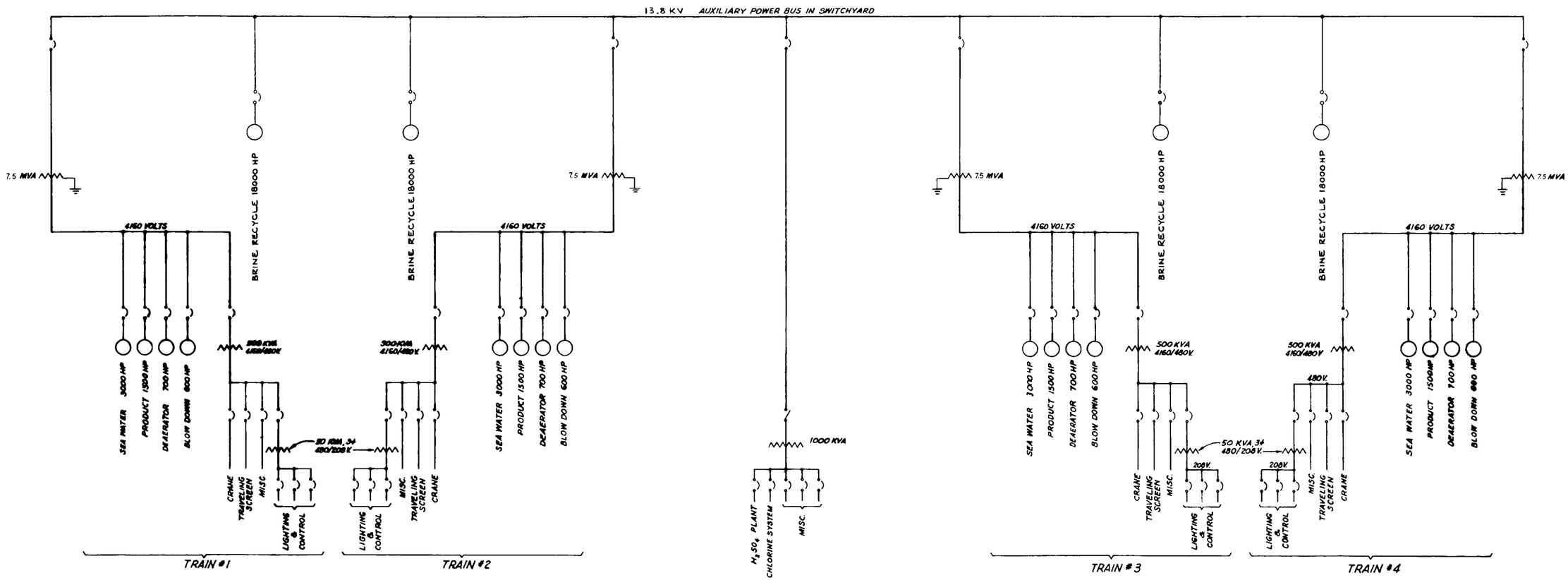

Figure 3-18. Electrical One Line Diagram, ORNL Reference Plant

3.5.2 Costs

The costs for the alternative electrical power system described above are based on new bills of material that are submitted under separate cover. The total capital cost (excluding client costs) for the alternative approach is a deduction of $62,000 from the ORNL reference plant estimate.

3.6 MATERIALS

The materials exposed to the interiors of the evaporator structure are required to serve in a severe environment—in contact with brine, steam, and distilled water at elevated temperatures. Steel has a proven ability to give long service in such conditions. Concrete and various organic polymers are generally less costly than steel and often displace the latter in many areas of design; however, they are largely untried in the environment inside the evaporator. To achieve full economy in the evaporator design, it will be necessary to identify the materials that can fulfill their functions at lowest cost. In the following paragraphs, the proposed plant design is reviewed with respect to materials use and the areas identified where more effective use of materials may be possible.

3.6.1 Evaporator Materials Evaluation

Two general conclusions have been formed in regard to the use and serviceability of the evaporator materials. First, certain design modifications may offer substantial capital cost reduction without sacrificing performance. Second, additional testing is required to evaluate material performance characteristics adequately.

With the exception of the floors, which are of reinforced concrete lined with 1/4-inch steel plate, the reference plant design specified all steel

construction for the 16 stages at the hot end of the evaporator, with phenolic coating for the steel water-box interior surfaces, floor liner, and brine trays. The remaining 34 stages have the same steel-lined floors, but also have steel-lined concrete roofs and longitudinal walls. The stage walls, brine trays, and all other concrete surfaces of these remaining 34 stages are lined with 1/8-inch sheet polypropylene.

The Denver laboratories of the Bureau of Reclamation are conducting extensive tests to evaluate the performance characteristics of concrete and various coating materials in hot saline water, hot distilled water, and steam. Interim test results are covered in detail in two reports* published by the Bureau. Test results applicable to the MSF plant under discussion are stated below.

- Concrete exposed to flowing brine for one year at temperatures to 250 F evidenced no surface deterioration and only minor surface alteration (determined by petrographic analysis). Concrete compressive strength increased over that of air-dried control specimens.
- In an autoclave, hot, dripping distillate caused severe leaching of the concrete in the area of drop impact. Vapor condensed on the interior of the concrete autoclave head, however, caused no discernible deterioration. The time span and range of conditions for these tests are, unfortunately, severely limited, and the test results are correspondingly limited in usefulness.
- In the coating tests, neoprene rubber, phenolic, and epoxy-modified phenolic on both steel and concrete performed well in brine at 250 F for 18 months and in distillate at 225 F for four months. Molded polypropylene (PPO) stood well in brine at 290 F for 18 months; the PPO was not tested in a distillate environment.

---

*"Behavior of Concrete and Coating Materials in Hot Saline Water," First Annual Progress Report, General Report No. 37, October 1, 1967

Evaluation of Concrete and Related Materials for Desalination Plants, Summary Report covering work to January, 1968

Based on these test results and the assumptions used in the base case design, the following conclusions may be drawn regarding the materials in the evaporator design.

- With the possible exception of the polypropylene liner, the design for the concrete end of the evaporator could be extended through all stages with no change in the performance characteristics of the materials. Since, however, the long-term behavior of polypropylene in a distillate environment is as open to question at 200 F as it is at 250 F, the design change is consistent with the knowledge of material performance. In any event, further testing of the polypropylene material is necessary.

- The excellent performance of concrete in brine to 250 F indicates that steel and polypropylene linings can be eliminated from some and perhaps all surfaces exposed to brine. The deterioration-time-temperature relationship for concrete exposed to flowing brine cannot be constructed from the available data. However, since deterioration is a surface phenomenon, the depth of deterioration after N years of exposure will surely be less than N times the depth of alteration after a one-year exposure. In the first eleven stages, the internal pressure is greater than atmospheric and would tend to force brine and vapor through the concrete, which may increase the deterioration rate. Thus, a steel liner should probably be provided as a vapor barrier in these stages unless some more economical, experience-proven sealant can be provided. Conversely, the remaining stages are under a vacuum. The pressure differential may reduce the deterioration rate through countering the tendency of brine to permeate the concrete by capillary

action. An external vapor barrier, of built-up tar and fabric construction or of neoprene hypalon, could probably provide adequate stage sealing, although this assumption is based on limited applicable experience that must be thoroughly confirmed through research and testing. The external coating could be readily repaired should leakage be suspected, and these repairs might be economical enough to preclude the need for extensive leak testing. If the reference plant were modified by substituting an external neoprene-hypalon barrier for the steel liner in stages 17 through 48, the capital cost would be reduced approximately $3,628,000. This substitution is offered as a possible alternative.

- Concrete structures in the sea, where the temperatures are less than 80 F, have served for many decades with no noticeable deterioration. Additionally, the Bureau found concrete to be in excellent condition following a two-year exposure to flowing brine at 100 F. Thus, in the lowest temperature stages, no liner is needed on surfaces exposed to brine. Limited extrapolation of the data available suggests that liner can be eliminated from the surfaces exposed to brine in all stages where the pressure is less than atmospheric and the temperature less than 212 F. Sacrificial concrete in varying amounts should be added to compensate for any expected loss through deterioration.

- Since the effect of distillate on concrete has not been sufficiently well evaluated, it is not possible to state with confidence that liner material should be removed from surfaces exposed to condensing vapor and flowing product water. It should be noted, however, that there is no

condition in the evaporator duplicating the severity of the Bureau drip test mentioned above, except where ledges are exposed below the tube bundles. Flowing product would probably leach exposed concrete and would seem to make mandatory the lining of the interior surface of the product tray. Other areas within the evaporator are subject to varying rates of vapor condensation, but in no case at a rate as great as that used in the Bureau autoclave test. Vapor will certainly condense on the roof and longitudinal chamber walls and result in a slow runoff of distillate, possibly enough to necessitate lining these surfaces. The stage walls and tray exteriors, however, have a heat flow so small as to make condensation nil; the condition on these surfaces approaches that of a water film in equilibrium with surrounding vapors. Such a film would quickly become saturated with salts from the concrete and might then act as a protective barrier against further attack. If this is the case, considerable cost saving will result from eliminating the liner on tray exteriors and stage wall surfaces. Since the downstream sides of all stage walls are at higher temperatures than the stage interiors they face, due to heat flow from the hotter, upstream stages, they will not be subject to vapor condensation.

The results of the environmental tests performed to date point to a potentially more efficient use of materials in the evaporator design and an attendant reduction in capital costs; however, it is premature to extrapolate the data over all service conditions and the plant lifetime: more experimental work is required. It will be necessary, in particular, to determine more completely the effects of vapor and hot distillate on concrete. Before eliminating the liner on any surfaces exposed to vapor and condensate, it will be necessary to determine the effect of steam on

almost-adiabatic concrete surfaces. The effect of stress or strain on concrete deterioration rate should also be determined. Without this and other additional research, it will not be possible to take full advantage of the potential economy associated with concrete construction.

3.6.2 Concrete Testing Program

The results to date of the tests being conducted by the Bureau of Reclamation's Denver laboratories are of considerable value in their application to the design of concrete evaporator structures. There are, however, many questions about concrete performance that are still to be resolved. To achieve the most economical evaporator design and at the same time to ensure adequate performance, it will be necessary to complement the Bureau's research program with additional testing.

The Bureau has concluded that unstressed concrete is not seriously affected by flowing brine at temperatures to 250 F. Stressed concrete, however, may react quite differently to the environment. Concrete in tension will have a more permeable surface due to the expansion of capillaries and the opening of fine cracks that may accelerate surface deterioration by brine and distillate. Conversely, compressed concrete will have a less permeable surface and possibly a greater resistance to deterioration than unstressed concrete. In addition, the state of stress in the paste may influence its reactivity independent of any change in permeability.

From the results of the Bureau's tests on concrete in distillate, it can be reasonably concluded that flowing product water will quickly deteriorate unprotected concrete. There is insufficient data from the autoclave tests, however, to evaluate the effect of condensing distillate on concrete at a relatively rapid rate. Presumably, this information will become

available through further autoclave tests. Those tests should be complemented by others where (1) vapors are condensed on almost-adiabatic concrete surfaces and (2) the concrete is maintained at a somewhat higher temperature than the surrounding vapors. The results of these additional tests will establish the expected behavior of unlined stage walls, tray exteriors, longitudinal walls, and the roofs in the lower temperature stages. The tests should be carried out on stressed and unstressed specimens at several temperatures and should be designed to make maximum use of work done by the Bureau of Reclamation. Concrete mixes, saline solutions, test temperatures, etc., should be duplicated to establish a basis for correlating data and determining repeatability of results.

Appendix A

SITE DATA

To limit the variables involved in site selection and evaluation, it has been assumed that the MSF plant will be located hypothetically on the Southern California coast within the boundaries of the United States Marine Corps Camp Pendleton, in San Diego County. This assumption establishes the governing geological and seismological characteristics. Much of the ensuing geological and seismological description is extracted from the PHSR* for the San Onofre Nuclear Power Station, which is also located on the Camp Pendleton coast, 55 miles north of San Diego. It is emphasized that the following discussion pertains strictly to a hypothetical site.

A. 1 HYPOTHETICAL SITE LOCATION AND DESCRIPTION

The hypothetical location for the plant is shown in Figure A-1; the choice of location is based on the following preliminary criteria:

- Minimum site dimensions of 1000 x 2000 feet are required, preferably seaward of U. S. Highway 101.
- Existing grade must be at +40 feet MSL or greater.
- Excavation required to level the site to +35 feet MSL should be minimum.

*Part B, Preliminary Hazards Summary Report, Southern California Edison Company, Coast Nuclear Station, Unit No. 1, January, 1963.

Land availability and soil conditions are not a part of the preliminary criteria. However, it is feasible to assume that soil conditions are typical for the area and, if so, good bearing capacity is assured.

The USGS 7.5' quadrangle maps of the area along the coast show only one site satisfying the above criteria. This is between U. S. Highway 101 and the shore some 35 miles northwest of San Diego and 16,000 feet northwest of the highway bridge over the San Luis Rey River.

The accompanying map, Figure A-1, copied from a composite of two USGS 7.5' series topo maps—"Las Pulgas Canyon" and "Oceanside"—indicates the hypothetical site with cross hatching. The larger, single-hatched rectangle is a 5000-foot x 3000-foot area within which the hypothetical site can be shifted if local conditions dictate. The hypothetical site is approximately 300 feet from the shore and 1600 feet from the highway, on a gently dipping coastal plain that allows the plant to be located almost entirely within the existing 40-foot and 45-foot elevation contours. At the seaward boundary on the hypothetical site, the coastal plain drops off abruptly to a narrow beach zone. The surface materials at the hypothetical site are probably sedimentary deposits, which offer good bearing capacity and can be easily excavated to design grade.

A.2 SITE PREPARATION

Bounded by the 40-foot and 45-foot (estimated) elevation contours, the hypothetical site will require removal of approximately 600,000 cubic yards of overburden to reach the design grade of +35 feet. Potential spoil areas are the beach and a depression off the site's southwest boundary. Drainage presents no special problems.

An access road from U.S. Highway 101 and a rail spur from the parallel AT&SF main line can be constructed along the shortest-distance

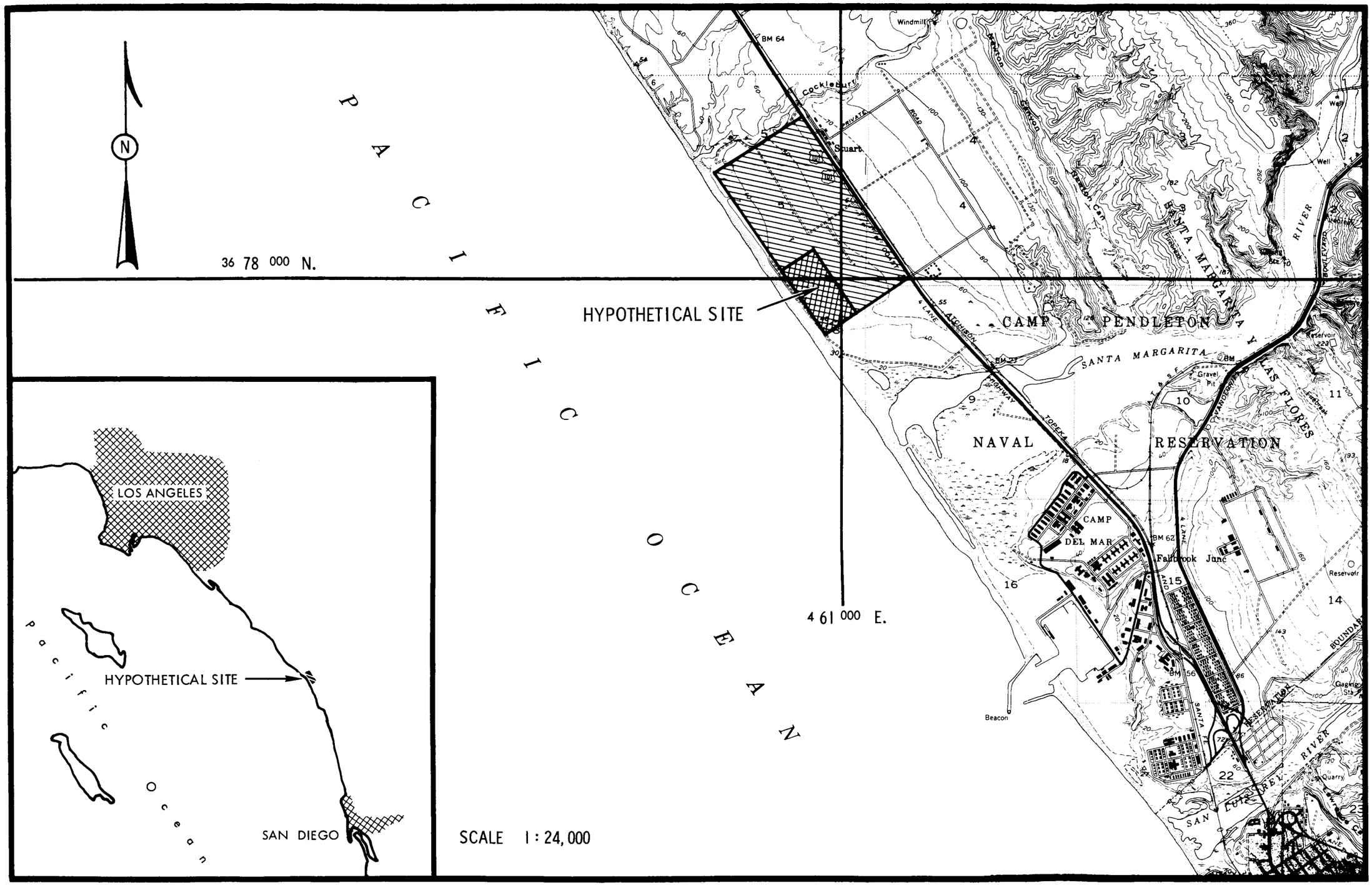

Figure A-1. Hypothetical Site Location

route, which is 1600 feet. Since the railroad and highway are at about +60 feet, the access road and spur would have a grade of 1.5 percent. It may not, however, be permissible to cross the highway with a spur. In this case, it would be necessary to route the spur under the highway, requiring more trackage and the construction of a viaduct.

The locations of the nearest utility tie-ins are not known. Since the plant will be occupied by relatively few personnel, it is probable that sewage effluent can be discharged through an outfall extending several hundred feet offshore.

A.3 GEOLOGY

The Southern California coastal area is characterized by a gently sloping coastal plain extending seaward from uplands several miles inland. At the hypothetical site, this plain is terminated abruptly at the shoreline by high seacliffs that have been straightened over considerable distances by marine erosion. These cliffs generally range in height from 60 to 90 feet above sea level and are separated from the ocean by, at most, a narrow band of beach sand. In general, tidal action is limited to a gently sloping ledge of sandstone, siltstone, or other soft rock. The cliffs may be deeply scored by ephemeral streams to form steep-sided ravines, or barrancas.

The geology of the hypothetical site is represented by the geologic cross section shown in Figure A-2. The surface is Pleistocene terrace, consisting largely of horizontal, crudely stratified deposits, mostly fluvial but partly marine in origin. This formation constitutes the upper 30 to 40 feet of the coastal plain at the shoreline and is underlain typically by an upper Miocene marine formation or the middle Pliocene San Mateo formation, either of which should extend downward for several hundred feet. A few feet of Pleistocene littoral deposits of well-rounded gravel

and sand may be interbedded between the upper Pleistocene strata and the underlying, more consolidated, formation.

The surface Pleistocene formation is composed chiefly of sedimentary deposits that exhibit wide laterial stratigraphic continuity. This formation is well weathered and can be readily excavated with such earthmoving equipment as scrapers, bulldozers, and shovels. It is relatively stable and will stand unsupported at a very steep angle.

Lower strata are unweathered and of more consolidated material than the Pleistocene deposits. Typically, the underlying upper Miocene marine formation consists of a well-consolidated sandstone, siltstone, shale, or conglomerate. Excavation of the upper Miocene strata, if necessary, would require different techniques than excavation of the surface Pleistocene material. Massive excavation probably would require explosives to break up gross quantities of the formation; shaft-type excavations might require only high-pressure jets or chisels to facilitate material fracture. These upper Miocene marine deposits are several hundred feet thick and should exhibit relatively uniform distribution, both horizontally and vertically. Underlying formations of older geologic time are of little importance.

The site may be underlain by the middle Pliocene San Mateo formation, rather than the upper Miocene marine formation described above. This uniformly distributed, massive, well-graded, coarse-grained sand formation also exhibits high density and strength and extends vertically downward from elevation +20 for several hundred feet.

A. 4 SEISMOLOGY

The Southern California area is seismically active and is traversed by at least thirteen active fault zones, which are shown in Figure A-3.

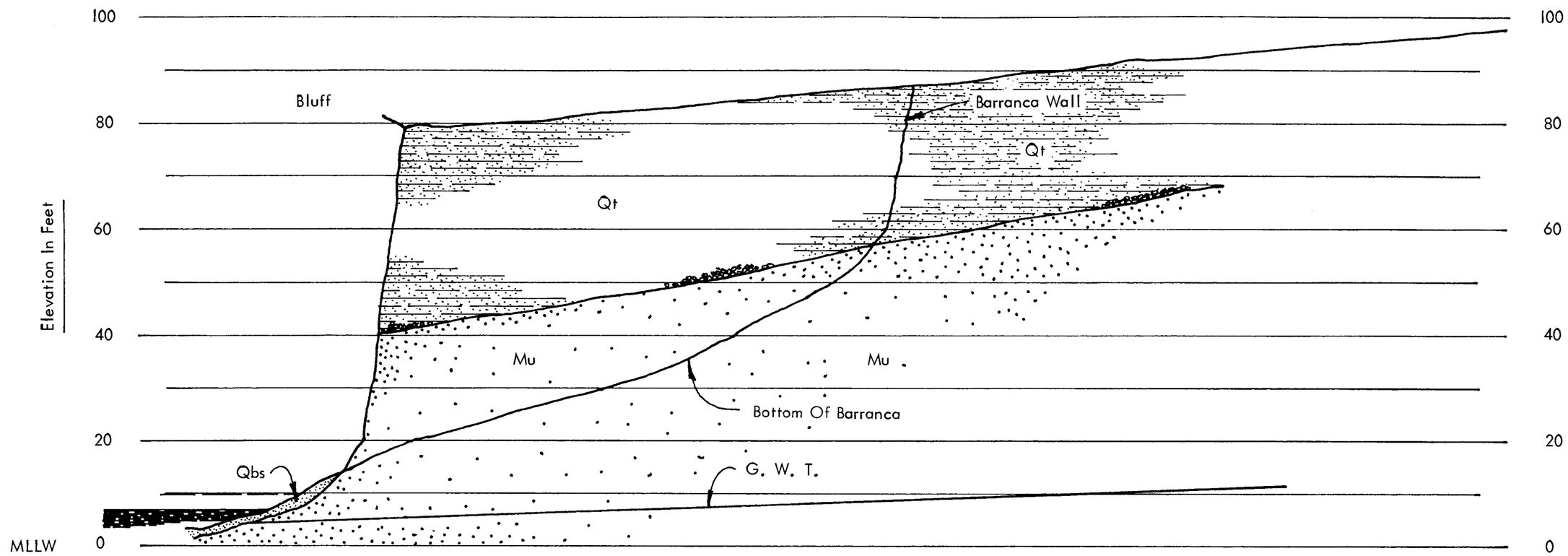

Scale: Vertical 1" = 20'
Horiz. 1" = 100'

TYPICAL GEOLOGICAL CROSS SECTION
SOUTHERN CALIFORNIA COASTAL BLUFF

LEGEND

Qt — Terrace Material: brown clayey sand, silt & gravel.

Mu — Upper Miocene: siltstone, sandstone, shale.

Qbs — Beach Sand: fine & medium clean sand.

Figure A-2. Typical Geological Cross-Section

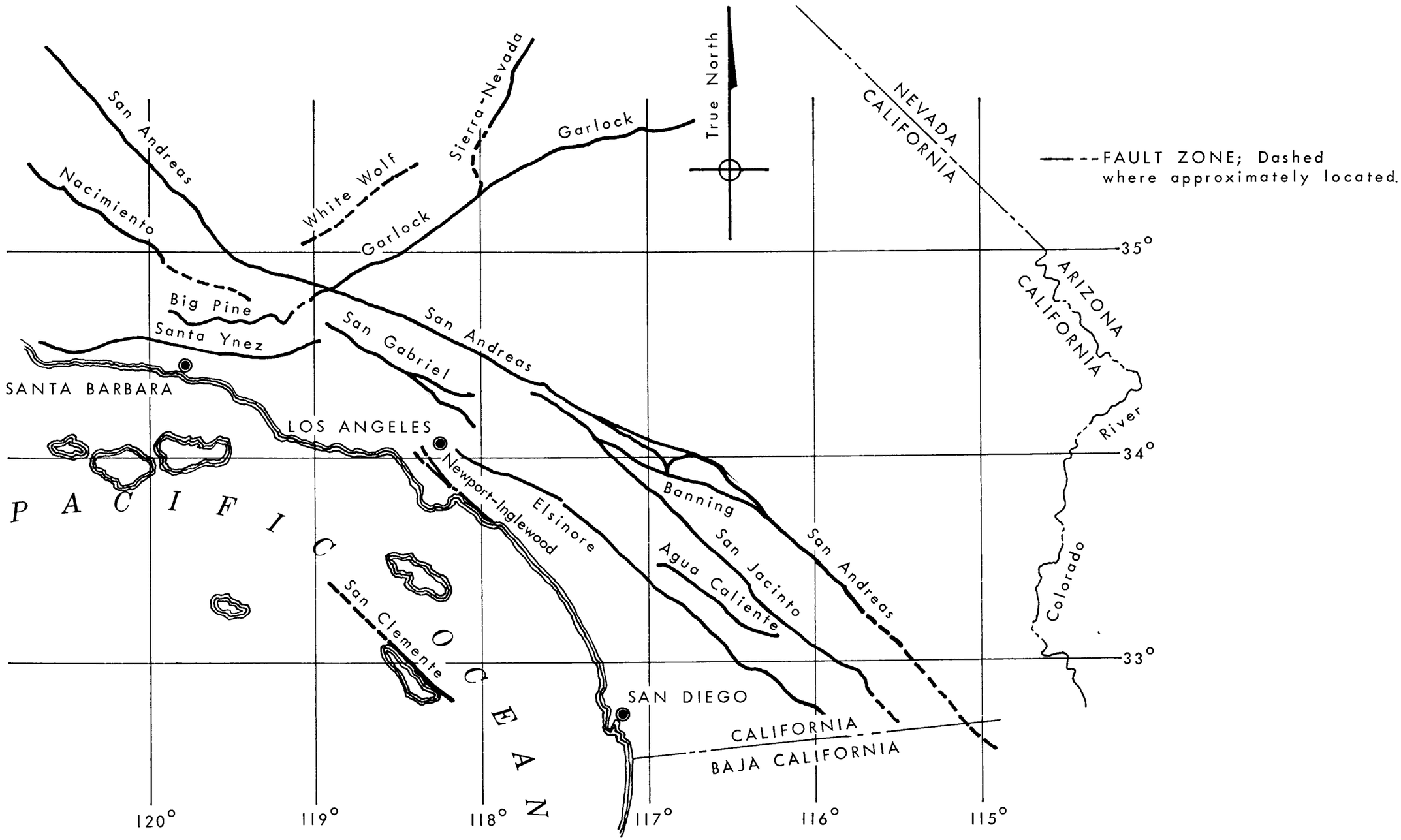

Figure A-3. Southern California Fault Zones

The San Andreas fault zone traverses the state on a NNW to SSE general heading, from Point Arena in the North to the Mexican border near El Centro. This fault zone is considered the major North American trace of the world's most active seismic belt and has been the source of many severe earthquakes. No coastal site in Southern California is more than 40 miles from a seismically active fault zone, and most are within 25 miles.

From 1931 to 1964, Southern California experienced over 1400 earthquakes of Richter-scale magnitude 4.0 or greater. Several of these earthquakes caused serious damage to man-made structures; one, the March 10, 1933, Long Beach earthquake, severely damaged structures along the coastline.

Seismic regionalization mapping by Professor C. F. Richter has been used to obtain an indication of the probable maximum earthquake intensity to be used for engineering purposes for the Southern California coast.

This regionalization mapping is based upon: (1) probable earthquake occurrences, (2) the distance of occurrence from the site under investigation, and (3) the character of the ground and its effect on expected intensity. Professor Richter points out, however, in his article "Seismic Regionalization," that, "...as in most of California the expectable intensity of shaking varies principally with the nature of the ground, and only secondarily with reference to the location of active faults...the user of generalized regionalization should verify the nature of the ground at any particular locality where construction is projected."

Thus, in order to correctly refer to the Regionalization Map for California to obtain an indication of the maximum earthquake intensity to be anticipated, the nature of the ground at the particular locality must be

considered. The relations set forth by Richter concerning the general adjustment of geology to earthquake intensity in California are as follows:

Geology	Intensity*
Quaternary alluvium and sand dunes	IX
Quaternary terraces	VIII
Tertiary sediments	VII
Mesozoic sediments and batholitic rocks	VI

If the Quaternary terrace material capping the site is completely removed during site grading for the major structures, thus exposing Tertiary sediments (middle Pliocene San Mateo or upper Miocene marine foundations), an assignment of probable maximum intensity of VII may be made. If not, Intensity VIII must be assigned.

With the nature and age of the geologic formations known, a translation of such information into intensity can be made according to Richter's schedule. Hence, the Quaternary terraces are assigned a probable maximum intensity of VIII and the Tertiary sediments an intensity of VII. Under no set of circumstances does it appear reasonable to assign a probable maximum intensity of IX to most coastal localities. Intensity IX is normally distinguished by the presence of Quaternary alluvium (unconsolidated valley or basin fill), sand dunes, or landslides.

Richter and Gutenberg, in their article appearing in Bulletin No. 170 of the California State Division of Mines, have mapped the epicenters of shallow earthquakes of Intensity VI and greater that have occurred

*Intensities refer to the Modified Mercalli Intensity Scale (1931), which is arbitrarily scaled from the least damaging level I to the most damaging level XII.

in the Western United States. Tables accompanying that article give the epicenter and origin time for the shocks that occurred between latitudes 32°30' N and 36°00' N and longitudes 115°00' W and 120°30' W.

The following excerpt from Richter and Gutenberg's tables gives pertinent data for the five shocks whose epicenters were nearest the San Onofre Power Station Site. Note especially that the intensities shown are at the epicenters.

Date	Magnitude (Richter)	Approximate Corresponding Intensity At Epicenter (Modified Mercalli)	Approximate Epicentral Distance From San Onofre Site
1918, April 21	6.8	IX	41 miles
1933, March 11	6.25	VIII	30 miles
1933, October 2	5.4	VI	43 miles
1937, March 25	6.0	VII	62 miles
1951, December 26	5.9	VII	58 miles

A roughly approximate relationship between intensity on the Modified Mercalli Scale and acceleration is as follows:

$$\log_{10} a = \frac{I}{3} - 0.5$$

Where: a = acceleration in cm/sec^2

I = intensity of shock, Modified Mercalli Scale

Hence, accelerations associated with Intensity VIII may be assumed to be in the order of 0.15 of the gravitational acceleration, g, and with Intensity VII in the order of .07 g. In the design of all Southern California Edison Company Coastal steam stations, a design seismic acceleration of 0.20 g has been used. Based on the above relationship, an ac celeration of 0.20 g corresponds roughly to an intensity of VIII.

Nuclear plant structures on the coast, which are critical with respect to public safety, are designed for seismic accelerations of up to 0.45 g. However, these high values include a safety factor consistent with the potential loss of human life resulting from earthquake-induced accidents. For structures that are not critical to public safety, a design acceleration of 0.20 g appears to be economically justified

South of the Newport-Inglewood fault there are no known major active faults on the coast. Although the possibility of surface faulting may be considered in the design of critical nuclear structures (for reasons of public safety as mentioned above), it is not feasible, based on the information available at this time, to design noncritical structures to resist surface fault action.

Appendix B

CODES AND STANDARDS

The design information and specifications contained in numerous codes and standards are applicable to many components of the overall desalination plant. Effective use of these publications will reduce design effort and ensure proper performance of the components to which they apply. Whenever possible, the standard specifications should form a part of design documents. In all cases the latest revisions should be used. A listing of applicable codes and standards follows.

Civil-Structural Codes and Standards

Uniform Building Code:
- Chapter 23 - General Design Requirements
- Chapter 26 - Concrete
- Chapter 27 - Steel and Iron
- Chapter 28 - Excavations, Foundations and Retaining Walls

American Concrete Institute, 318-63 - Concrete Structures
American Institute of Steel Construction - Steel Structures
American Welding Society:
- D1.0-66 - Steel Structures
- D12.1-61 - Concrete Reinforcing and Steel Inserts

Mechanical Codes and Standards

American Standards Association, B31.3 - Pressure Piping
American Society of Mechanical Engineers, Section VIII - Pressure Vessels
American Water Works Association, C504-58 - Valves
Hydraulics Institute, Section B - Pumps
Heat Exchange Institute:
- Typical Specifications for Steam Surface Condensers

Standards for Steam Jet Ejectors
Standards and Typical Specifications for Deaerators and Deaerating Heaters
Tubular Exchanger Manufacturers Association - Evaporator, Brine Heaters

Electrical and Instrumentation Codes and Standards

Institute of Electrical and Electronics Engineers
Insulated Power Cable Engineers Association
National Electrical Code
National Electrical Safety Code
National Electrical Manufacturers Association
Underwriters Laboratories
Instrument Society of America

General Codes and Standards

American Society for Testing and Materials - Materials
American Welding Society, SRI-65 Arc Welding

Appendix C

CIVIL-STRUCTURAL ANALYSIS

C. 1 STRUCTURAL ANALYSIS OF THE CONCEPTUAL PLANT

The evaporator of the original reference plant has been revised in accordance with Bechtel recommendations. This original reference plant design was analyzed, and the results indicated:

- The thickness of the floor slab can be reduced from three feet to two feet. The calculation for this conclusion is in the structural calculation of the revised reference plant.
- The barrel-vault shell of the roof and the exterior wall is overstressed, and some modifications are necessary. This shell consists of a series of cylindrical shells, and there is an angle-type beam at the junction of every other joint. The analysis shows that the edge beam should be considered at every joint, and the shell of the exterior wall should be subdivided by a series of the transverse beams. The calculation will be presented in three sections: C. 1. 1 Approximate Method of Beam-Arch Analysis, C. 1. 2 Analysis of Multiple Barrels, and C. 1. 3 Review of Reference Calculations of Roof Shell.

C. 1. 1 Approximate Method of Beam-Arch Analysis

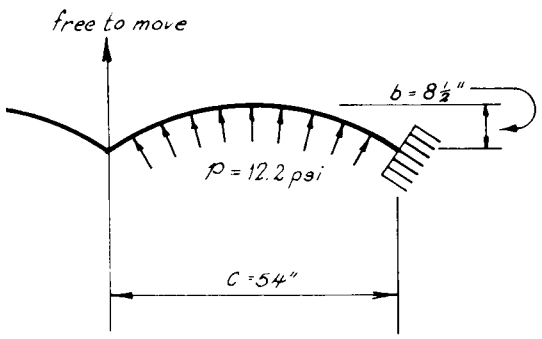

It is assumed that the one-foot strip of shell can be reduced to an arch, fixed at one end at the connection to the edge beam, and free to move upward in the other end.

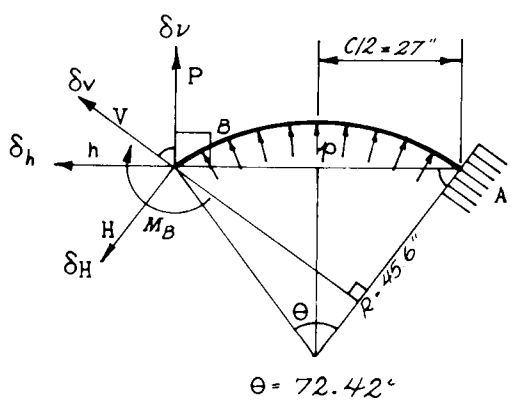

$\theta = 72.42$

$\sin\theta = .95330$

$\cos\theta = .30204$

$\alpha = 53.79$

$\sin\alpha = .80686$

$\cos\alpha = .59075$

In the following calculation, the deflection δ_h and the rotation ϕ_B of the point B has been computed from the equation of the reference book (Formulas for Stress and Strain, by R. J. Roark, fourth edition). Then the deflection δ_h and the rotation ϕ_B was eliminated to get the moment M_B.

Vertical Deflection:

$$\delta_V = \frac{1}{EI}\Big[M_B R^2(s - \theta c) + VR^3(1/2\ \theta + c^2\theta - 3/2\ sc) + HR^3(1/2 - c + sc\theta + 1/2\ c^2 - s^2) + pR^4(s + sc - 3/2\ \theta c - 1/2\ s^3 - 1/2\ c^2 s)\Big]$$

Horizontal Deflection:

$$\delta_H = \frac{1}{EI}\Big[M_B R^2(1 - \theta s - c) + VR^3(1/2 - c + \theta sc + 1/2\ c^2 - s^2) + HR^3(-2s + \theta s^2 + 1/2\ \theta + 3/2\ sc) + pR^4(1 - 3/2\ \theta s + s^2 - c)\Big]$$

Rotation:

$$\phi_B = \frac{1}{EI}\Big[M_B R\theta + VR^2(s - \theta c) + HR^2(1 - \theta s - c) + pR^3(\theta - s)\Big]$$

In which:

$s = \text{Sin}\ \theta \qquad c = \text{Cos}\ \theta \qquad M_B = M_0$

$$\begin{aligned}\delta_V = {} & M_0 R^2(.95330 - 1.263968 \times .30204) \\ & + VR^3(.631984 + .091228 \times 1.263968 \\ & \qquad - 1.5 \times .9533 \times .30204) \\ & + HR^3(.5 - .30204 + 1.263968 \times .9533 \times .30204 \\ & \qquad + .045614 - .908781) \\ & + pR^4(.9533 + .9533 \times .30204 \\ & \qquad - 1.5 \times 1.263968 \times .30204 \\ & \qquad - .5 \times .866341 - .5 \times .091228 \times .9533)\end{aligned}$$

$$\underline{\delta_V = + .5715111\ M_0 R^2 + .315391\ VR^3 - .3012664\ HR^3 + .191897\ pR^4}$$

$$\delta_H = M_0R^2(1 - 1.263968 \times .9533 - .30204) - .301266VR^3$$

$$+ HR^3(-2 \times .9533 + 1.263968 \times .908781$$

$$+ .631984 + .431902)$$

$$+ pR^4(1 - 1.5 \times 1.263968 \times .9533 + .908781 - .30204)$$

$$\underline{\delta_H = -.506981M_0R^2 - .301266VR^3 - .305956HR^3 - .200670pR^4}$$

$$\begin{cases} H = h \cos\alpha - P \sin\alpha \\ V = h \sin\alpha + P \cos\alpha \end{cases} \qquad \begin{aligned} \delta_h &= \delta_H \cos\alpha + \delta_V \sin\alpha \\ \delta_p &= \delta_V \cos\alpha - \delta_H \sin\alpha \end{aligned}$$

$$\delta_h = \Big[-.506981M_0R^2 - .301266\,(h \sin\alpha + P \cos\alpha)R^3$$

$$- .305956\,(h \cos\alpha - P \sin\alpha)R^3$$

$$- .20067pR^4\Big] \cos\alpha$$

$$+ \Big[.5715111M_0R^2 + .315391\,(h \sin\alpha + P \cos\alpha)R^3$$

$$- .301266\,(h \cos\alpha - P \sin\alpha)R^3$$

$$+ .191897pR^4\Big] \sin\alpha$$

$$\delta_p = -\Big[-.506981M_0R^2 - .301266\,(h \sin\alpha + P \cos\alpha)R^3$$

$$- .305956\,(h \cos\alpha - P \sin\alpha)R^3$$

$$- .20067pR^4\Big] \sin\alpha$$

$$+ \Big[.5715111M_0R^2 + .315391\,(h \sin\alpha + P \cos\alpha)R^3$$

$$- .301266\,(h \cos\alpha - P \sin\alpha)R^3$$

$$+ .191897pR^4\Big] \cos\alpha$$

$$\delta_h = \Big[-.506981M_0R^2 - .4230185hR^3 + .0688943PR^3 - .20067pR^4\Big] \cos\alpha + \Big[.5715111M_0R^2 + .07650hR^3 + .428586PR^3 + .191897pR^4\Big] \sin\alpha$$

$$\delta_p = -\Big[-.506981M_0R^2 - .4230185hR^3 + .0688943PR^3 - .20067pR^4\Big] \sin\alpha + \Big[.5715111M_0R^2 + .07650hR^3 + .428586PR^3 + .191897pR^4\Big] \cos\alpha$$

$$\underline{\delta_h = + .1616303M_0R^2 - .1881734hR^3 + .38408187PR^3 + .0362882pR^4}$$

$$\theta = \Big[1.263968M_0R + (.9533 - 1.263968 \times .30204)\,VR^2 + (1 - 1.263968 \times .95330 - .30204)HR^2 + (1.263968 - .9533)pR^3\Big]$$

$$\theta = \Big[1.263968M_0R + .5715111\,(h \sin\alpha + P \cos\alpha)R^2 - .506981\,(h \cos\alpha - P \sin\alpha)R^2 + .310668pR^3\Big]$$

$$\underline{\theta = 1.263968M_0R + .1613034h + .74668287PR^2 + .310668pR^3}$$

$\delta_h = 0$ and $\theta = 0$

$$\begin{cases} .1616303M_0 - .1881734hR + .38408187PR + .0362882pR^2 = 0 \\ 1.263968M_0 + .1613034hR + .74668287PR + .310668pR^2 = 0 \end{cases}$$

Taking $P = 0$, from which:

$M_0 \cong -.248\ pR^2$ $\qquad$ $p = 12.2$ psi

$M_0 = -520p$ $\qquad$ $S = 1/24$

$M_0 = -520 \times 12.2$ psi $= -6200$ in-lb/in

$\sigma = \frac{M_0}{S} = 6200/1/24 = 149$ ksi (too high)

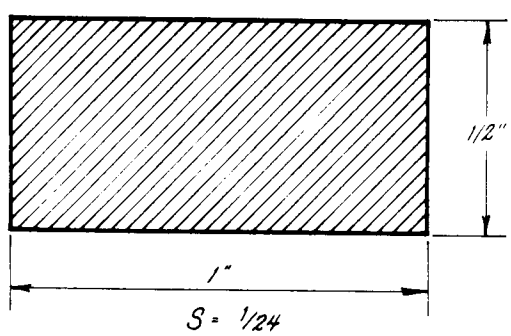

C.1.2 Analysis of Multiple Barrels

The analysis of multiple barrels shell is the same as that in barrel-vault shell with edge beams which is discussed in Appendix C.2.

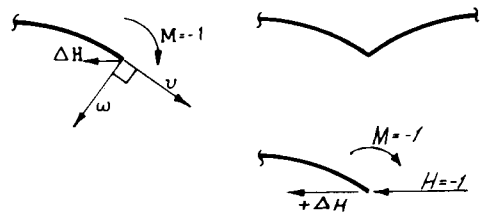

Here, the result of that analysis will be used. The end conditions in this case are as follows:

$$\begin{cases} \Delta H = 0 & (1) \\ \theta = 0 & (2) \end{cases}$$

$$\text{obviously,} \begin{cases} \text{longitudinal stress} & s = 0 \\ \text{vertical force} & V = 0 \end{cases}$$

Then, using the corresponding value from Appendix C.2, we get:

$$\Delta H_1 = v_1 \cos\phi_0 - \omega_1 \sin\phi_0 = \frac{-1}{Et}(-32400)\ .59075 = +\frac{1}{Et}\ 19200$$

$$\Delta H_2 = \frac{+8510}{Et}\left[-491 \times .80686 - (-12600)\ .59075\right] = \frac{1}{Et}\ 60 \times 10^6$$

$$D_{10} = \Delta H_1 + \Delta H_2 = \frac{1}{Et}\ 60{,}019{,}200 \quad \text{(in.)}$$

$\underline{-x_1 = H = -1 \text{ lb/ft}}$

$$D_{11} = \frac{1}{Et}(+7045)(-.80686) + \frac{.59075}{Et}\left[-2170 \times .80686 - (-76000)(.59075)\right]$$

$$= \frac{1}{Et}(-5680 + 25560) = + \frac{1}{Et}\,19880 \quad \text{(in.)}$$

$\underline{-x_2 = M = -1 \text{ lb-ft/ft}}$

$$D_{12} = \frac{1}{Et}(-1430 \times .80686 + 56100 \times .59075) = \frac{+32110}{Et} \quad \text{(in.)}$$

$\underline{-x_1 = H = -1 \text{ lb/ft}}$

$$D_{21} = (-.80686)\left(\frac{+158}{Et}\right) + (+.59075)\left(\frac{+1074}{Et}\right) = + \frac{509}{Et}$$

$\underline{-x_2 = M = -1 \text{ lb-ft/ft}}$

$$D_{22} = \frac{+1130}{Et}$$

$$D_{20} = + 8510 \frac{1}{Et}(+158) = \frac{1,344,580}{Et}$$

$$\begin{cases} 19,880\, x_1 + 32,110\, x_2 + 60,019,100 = 0 \\ 509\, x_1 + 1130\, x_2 + 1,344,580 = 0 \end{cases}$$

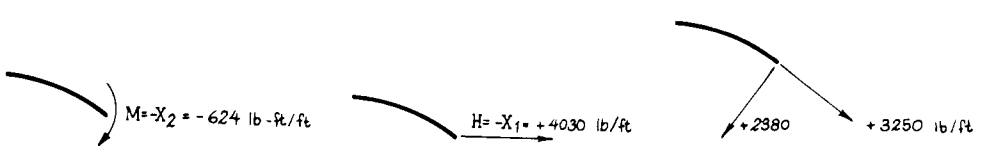

from which:

$$x_1 = -1.62\ x_2 - 3020$$

$$1130\ x_2 - 821\ x_2 - 1{,}537{,}180 + 1{,}344{,}580 = 0$$

$$309\ x_2 - 192{,}600 = 0$$

$$x_2 = +\ 624 \text{ lb-ft/ft}$$

$$M = -x_2 = -624 \text{ lb-ft/ft}$$

$$\sigma_M = 7950 \times \frac{624}{332} = 15000 \text{ psi}$$

$$x_1 = -\ 1010 - 3020 = -\ 4030 \text{ lb/ft}$$

$$H = -\ x_1 = +\ 4030 \text{ lb/ft}$$

Then:

$$\begin{cases} \bar{N}_{\phi_1} = +\ 4030 \times .80686 = +\ 3250 \text{ lb/ft} \\ \bar{O}_{\phi_1} = +\ 4030\ (-.59075) = -\ 2380 \text{ lb/ft} \\ \bar{M}_{\phi_1} = -\ 624 \text{ lb-ft/ft} \end{cases}$$

$$A_1 = 3250\ (-.01268) - 2380\ (-.0662) - 624\ (.0574)$$
$$= -41.2 + 157.5 - 35.9 = +\ 80.4 \text{ lb/ft}$$

$$B_1 = 3250\ (-.00461) - 2380\ (-.0202) - 624\ (.0324)$$
$$= -15 + 48 - 20.2 = +12.8 \text{ lb/ft}$$

$$A_2 = 3250\ (-.0446) - 2380\ (-.2552) - 624\ (.1365)$$
$$= -145 + 609 - 85 = +379 \text{ lb/ft}$$

$$B_2 = 3250\ (.0052) - 2380\ (-.1165) - 624\ (.1257)$$
$$= +16.9 + 277.1 - 78.5 = +215.5 \text{ lb/ft}$$

Final Value of A's

from the simple shell of Appendix C-2 (page C-59)

$A_1 = -108$ lb/ft $\qquad A_2 = -380$ lb/ft

$B_1 = -39.4$ lb/ft $\qquad B_2 = +44.4$ lb/ft

from the end condition (multiple barrel)

$A_1 = +80.4$ lb/ft $\qquad A_2 = +379$ lb/ft

$B_1 = +12.8$ lb/ft $\qquad B_2 = +215.5$ lb/ft

then, sum of those:

$A_1 = -27.6$ lb/ft $\qquad A_2 = -1$ lb/ft

$B_1 = -26.6$ lb/ft $\qquad B_2 = +259.9$ lb/ft

Final Force is:

at edge:

$$N_{x1} = +303 \left[3.3\ (-26.6) - 7.58\ (-27.6) + 1.66\ (259.9) + .469\ (-1) \right]$$

$$= +303\ (-88 + 209 + 430 - .5) = +167{,}000 \text{ lb/ft}$$

$$\sigma_{x1} = \frac{167{,}000}{1/2 \times 12} = \underline{27{,}900 \text{ psi}}$$

C. 1. 3 Review of Reference Calculation of the Roof Shell

This review indicates that the reference calculation analysis is based on having beams at each edge of the barrel. In fact, the calculation has not covered all critical structural aspects of a barrel-type shell; consequently, the location and direction of critical stress has been overlooked.

The following comments describe in more detail critical areas in the reference calculation:

- With regard to the first part of the reference calculation by T. Blankenship. The first part treats the roofs as a series of beam-arch fixed at both ends instead of actual case which consists of barrel-type shell with edge beams at every other longitudinal joint. The fixed beam-arch approach ignores the longitudinal stress which is the critical stress in this case.
- In part 1 of Section A. 1. 2 of Appendix I, Vessel Shell Design (stress analysis of curved plate), the axial stress is based on a circular cross-section cylindrical shell, which is fixed at the ends by means of a diaphragm. If the stress analysis were assumed to be valid for our problem, which is a circular segment, the result of reference calculation is valid for the crown of shell at fixed end. Our analysis, however, shows that the axial stress, which is more critical than other stresses, will be maximum at the edge of the curved shell at mid-length between two supports.
- In part 2 of the same section, the circumferential stress is based on beam-arch analysis, especially a symmetrical case with two fixed ends. Therefore, their stress analysis would be valid if we had edge beam at every joint of two curved shells instead of the actual case where there are edge beams only at every other joint. In addition, it appears that there are errors in applying their approach.

C.2 CRITERIA AND STRUCTURAL CALCULATIONS FOR THE REFERENCE PLANT

C.2.1 Criteria

The following criteria provide minimum design requirements for the evaporator structure when the evaporator members are subjected to the loading cases in critical combination.

C.2.1.1 Design Loads. The following loads will be used in structural design:

- Dead load. The weight of walls, framing, floor, roof, tube bundles, tube sheets, trays, and water in tubes and on trays, as indicated in Table C-1

- Live load. According to the Uniform Building Code, Table No. 23-B, 1967 Edition, the live load for the roof of the evaporator structure is 20 psf.

- Seismic load. Based on locating the structure in a zone having the highest seismic activity in the U.S., a seismic factor of 0.20 g

- Wind load. According to the Uniform Building Code, 15 psf. Since wind force is not critical for the purpose of this study, it will not be considered.

- Pressure. Maximum design internal pressure on roof, floor slab, exterior wall, and mid-longitudinal wall, from stage 1 to stage 12, 12.2 psi

  Maximum design external pressure on roof, floor slab, exterior wall, and mid-longitudinal wall, from stage 13 to stage 50, 14.0 psi

  Maximum design pressure on stage wall, 1.4 psi

- Temperature. Design temperature, assuming an ambient temperature of 70 F, is as follows:

Stage:	1	5	10	15	30	48	50
Temp. (F):	176.95	164.43	149.67	134.20	88.41	33.45	21.80

C.2.1.2 Material Specifications. The reference design is based on the following material specifications:

- Concrete. Compressive strength, (f'c) of 4000 psi

- Reinforcement steel.

  ASTM A-15 intermediate grade, yield strength (F_y) of 40,000 psi

  ASTM A-432, yield strength (F_y) of 60,000 psi

- Structural steel. Carbon steel, ASTM Grade A-36, yield strength (F_y) of 36,000 psi

- Liner plate. Carbon steel, ASTM Grade A-36 or A-442

- Steel shell. Carbon steel, SA-212, Grade B, yield strength (F_y) of 70,000 psi

C.2.1.3 Loading Combinations and Allowable Stresses

- Loading Combinations

$$\left.\begin{array}{l} D + L \\ D + L + E \\ D + L + T \\ D + P + E \\ D + P + E + T \end{array}\right\} \text{ where } \left\{\begin{array}{l} D = \text{Dead load} \\ L = \text{Live load} \\ E = \text{Earthquake} \\ T = \text{Temperature} \\ P = \text{Pressure} \end{array}\right.$$

- Allowable Stresses. According to Working Stress Design, ACI 318-63; U.B.C.; and ASME Boiler and Pressure Vessel Code, Section VIII, with no allowable stress increases for load combinations.

Concrete

Compressive stress, $n = 8$

$f_c = 1/3.5\ f'c = 1140$ psi

Tensile stress, $fc_t = 1.6\ \sqrt{f'c} = 88$ psi

Shear stress: beams, $v = 1.1\ \sqrt{f'c} = 60$ psi

Slabs and footings, $v = 2\ \sqrt{f'c} = 110$ psi

Bond stress

top bars, $u = \frac{3.4\sqrt{f'c}}{D}$, but not greater than 350 psi

other top bars, $u = \frac{4.8\sqrt{f'c}}{D}$, but not greater than 500 psi

Reinforcing steel, $f_y = .50\ F_y$

Structural steel

Tension and compression of box-type member

in bending, $F_b = 1/3.5\ F_y$

in compression, $F_a = 1/3.5\ F_y$

Steel shell, according to ASME B.P.V.C. for $F_{ys} = 70,000$ psi, $f_s = 17,500$ psi

Soil, allowable bearing pressure, $f_{soil} = 4000$ psf

Table C-1

DEAD LOAD SUMMARY

HEAT RECOVERY

Steel Stages

Item	Load
Roof arch and insulation	266 lb/ft/9-ft width
Roof bars,	38.2 lb/ft
Roof tubes,	1,095 lb/column
Column weight	980-1,100 lb
Brine water load acting on column	5,600 lb/column
Product water load acting on column	3,500 lb/column
Stage wall beam	978 lb/column
Stage wall sheet plate	3,110 lb/column
Diagonal bar in first five stages	0-800 lb/column
Stiffeners	325-406 lb/column
Diagonal bar	0-350 lb/column
Tube bundle dead load (each)	
9.0' stage	32,500 lb/column
10.5' stage	38,000 lb/column
Dead load from sheet plates	557 lb/column
Steel tray	3,420 lb/column
Exterior wall	845 lb/ft of footing
Mid-longitudinal wall	12,280 lb/9-ft stage

Concrete Stages

Roof	164 psf
Beam	250 lb/ft
Dead load acting on column	20,640 lb

Table C-1 (Continued)

Item	Load
Column weight	6,500 lb/column
Brine water load acting on column	6,580 lb/column
Product water load acting on column	4,100 lb/column
Stage wall	1,880 lb/ft of floor
Exterior wall	4,100 lb/ft of floor
Floor concrete	164 psf
Mid-longitudinal	3,750 lb/ft of floor

HEAT REJECT - CONCRETE STAGES

Tube bundle dead load	38,500 lb/stage
Roof	164 psf
Intermediate tube plate	653 lb
Support tube plate	780 lb
Column weight	4,150 lb/column
Beam	250 lb/ft
Dead load acting on column	20,640 lb
Stage wall	1,170 lb/ft of floor
Exterior wall	2,150 lb/ft of floor
Floor concrete	164 psf
Mid-longitudinal wall	2,350 lb/ft of floor
Brine water load acting on column	6,580 lb/column
Product water load acting on column	4,100 lb/column

C.2.2 Structural Calculations

C.2.2.1 Steel Stages

A. Temperature Effect. The first part of the end evaporator is considered to be isolated by expansion joints along the stage wall between Stages 5 and 6 and along the mid-longitudinal wall. Assuming the difference in temperature between the bottom and top of each stage to be 3 F, the range of differential temperatures (relative to an ambient temperature of 70 F) in this part, as shown in Figure C-1, is as follows:

$\Delta T_1 = 176.95$ F $\qquad \Delta T_2 = 164.73$ F

$\Delta T_3 = 173.95$ F $\qquad \Delta T_4 = 161.73$ F

ΔT average = 1/2(176.95 + 164.73) = 170.84 F
(at bottom)

An increase of temperature, assuming that the bottom slab is fixed at its center, will cause the horizontal beams and trays to expand and force columns 1, 2, and 3 (see the column coordinates in Figure C-1) and columns 5, 6, and 7 to move to the left and right, respectively, of the central column 4.

With a 0.60×10^{-5} in/in/F coefficient of concrete thermal expansion, the expansion of the concrete slab in each direction is:

$$\Delta L_1 = 1/2 \times .60 \times 10^{-5} \times 540 \times 170.84 = \underline{.276 \text{ in.}}$$

Likewise, with a 0.65×10^{-5} in/in/F coefficient of steel thermal expansion, the expansion of the horizontal beams and the trays in a longitudinal direction is:

$$\Delta L_2 = 1/2 \times .65 \times 10^{-5} \times 540 \times 170.84 = \underline{.300 \text{ in.}}$$

And the expansion of each column in a vertical direction is:

Stage 1: $\Delta L_3 = .65 \times 10^{-5} \times 300 \times 175.45 = .341$ in.

Stage 5: $\Delta L_4 = .65 \times 10^{-5} \times 300 \times 163.23 = .316$ in.

Since there is no restraint in a vertical direction, (because all columns expand about the same amount), no increase of stress in the columns will occur. Due, however, to the horizontal expansion of the beams and trays, there is an increase in stress in critical part "a" of the columns, particularly in columns 1 and 7. Two alternative assumptions may now be made:

1. The bottom slab cannot move because of friction between the slab and the slab foundation.

2. The bottom slab is made free to move by providing a base for slippage and a system for slab expansion.

The expansion configuration of column 7 for these two alternative cases is shown below.

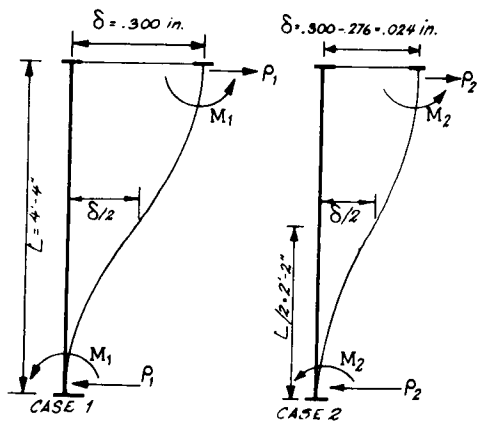

$\delta/2 = P\left(\frac{L}{2}\right)^3/3\,EI$ $\qquad P = \delta/2\left[3EI/\left(\frac{L}{2}\right)^3\right]$ $\qquad M = P\frac{L}{2}$

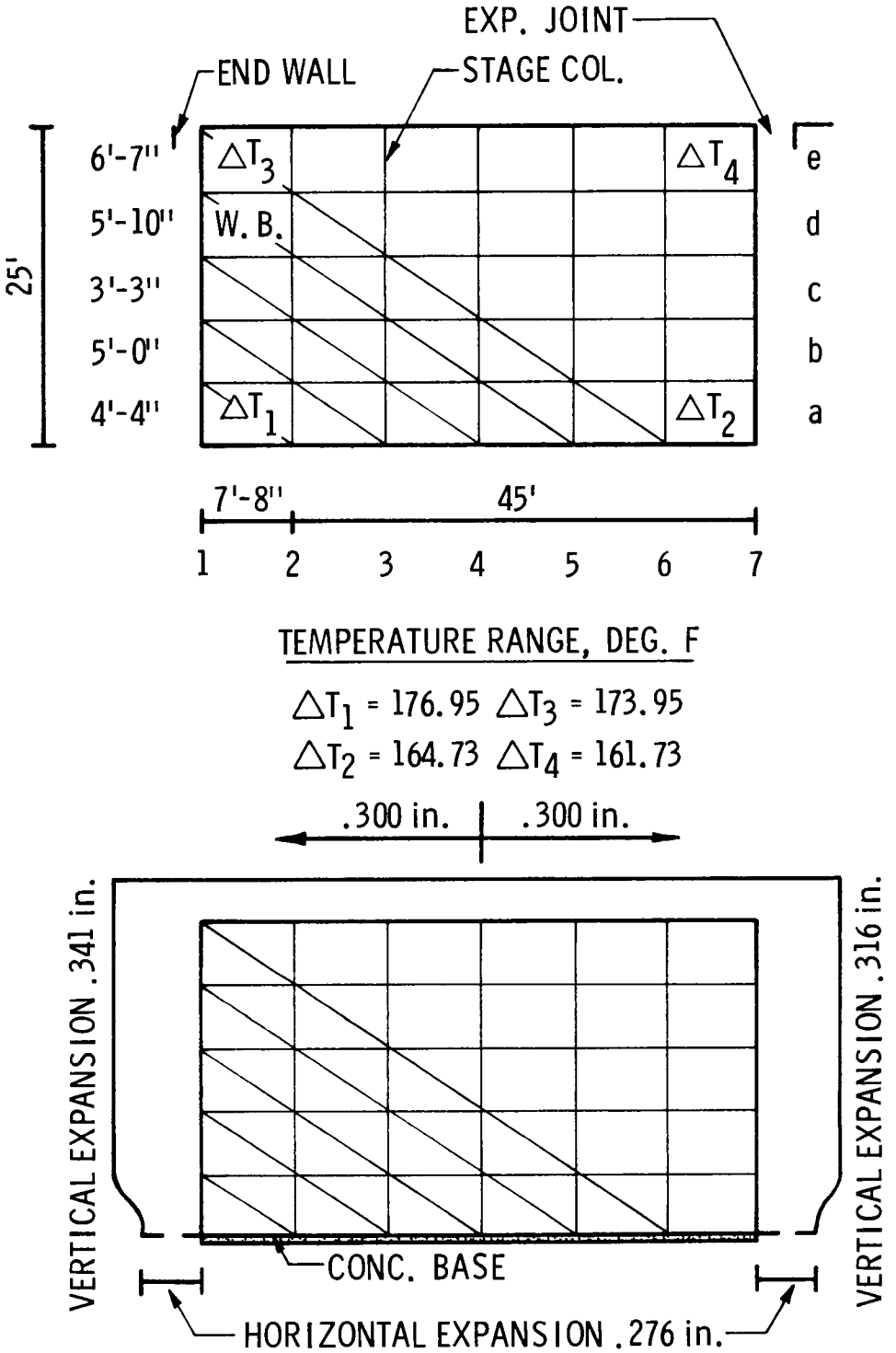

Figure C-1. Shape of Longitudinal Frame After Expansion

B. Seismic Effect. The analysis considers that the multispan rigid frame structures, which are placed in two directions, provide capability to withstand seismic forces.

Vertical loads imposed by deadweight and horizontal loads imposed by seismic forces are distributed at every elevation of the frames, as shown in Figure C-2. A seismic factor of .2 g has been used in the analysis.

Assumptions:

1. The points of inflection occur at mid-span of all girders and mid-heighth of all columns.

2. The direct stress in a column is proportional to its distance from the neutral axis.

The computations are as follows:

Location of neutral axis See Figure C-2

$$\bar{x} = \frac{(8 + 2 \times 9) \times 5 \times (13.93 + 11.93)/2 + 6.45 \times 53}{6 \times 12.93 + 6.45} = 25.7 \text{ ft.}$$

Moment of inertia of the column areas about the neutral axis is:

$$I = 1^2/Am \left[12.93 \left[(8 + 18)^2 + 18^2 + 9^2 + 9^2 + 18^2 \right] + 6.45 \times 27^2 \right]$$

in which $Am = \frac{6 \times 12.93 + 6.45}{7} = 11.8 \text{ in}^2$

then $I = 2150 \text{ ft}^4$

Moments at each elevation, indicated in Figure C-3, are:

$M_1 = 2.88 \times 3.3 = 9.5$ kips-ft.

$M_2 = 2.88 \times 9.42 + 37.7 \times 2.92 = 137$ kips-ft.

$M_3 = 2.88 \times 14.06 + 37.7 \times 7.47 + 2.8 \times 1.62 = 327$ kips-ft.

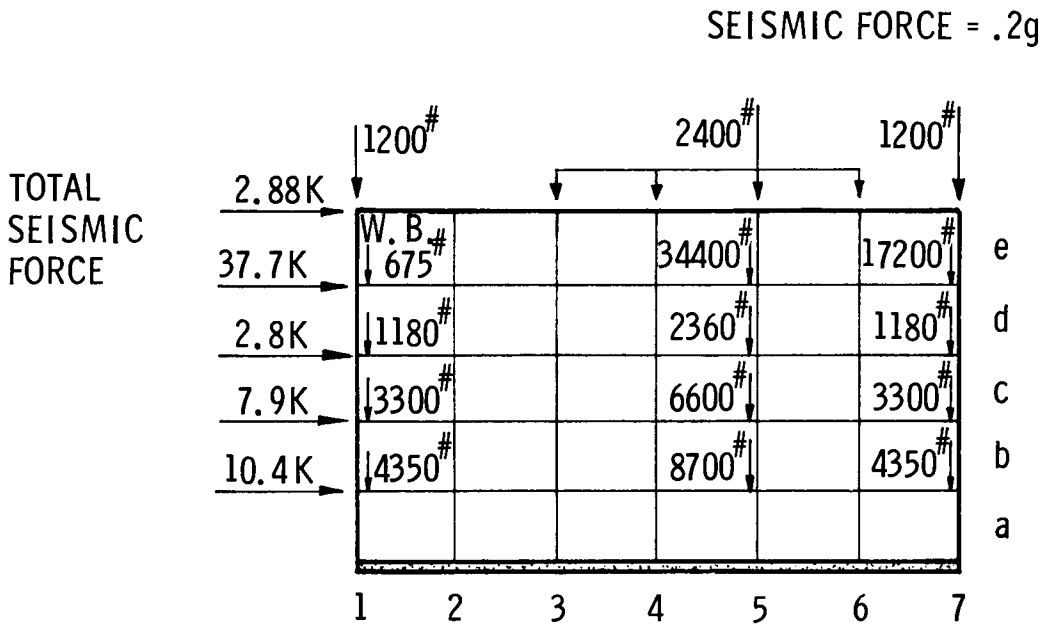

VERTICAL LOAD = D.L. AS CALCULATED BEFORE
SEISMIC LOAD = .20 x TOTAL VERTICAL LOAD AT EACH LEVEL

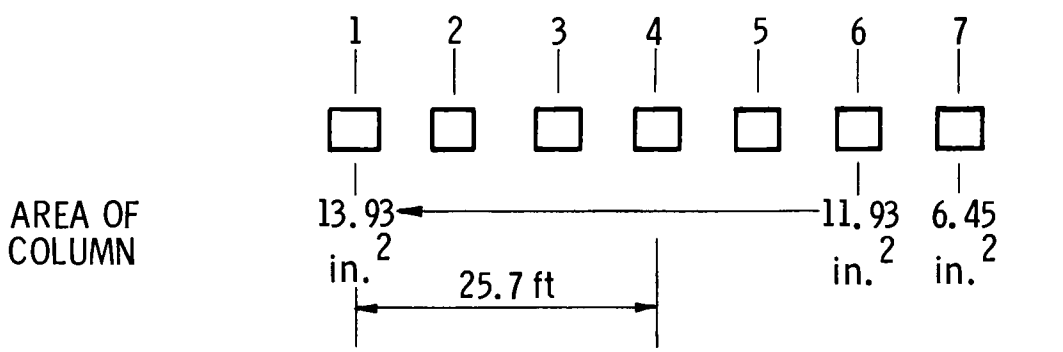

LOCATION OF NEUTRAL AXIS OF COLUMN AREAS

Figure C-2. Load Summary - Steel Stage

$$M_4 = 2.88 \times 18.8 + 37.7 \times 11.6 + 2.8 \times 5.7$$

$$+ 7.9 \times 2.5 = 534 \text{ kips-ft}$$

$$M_5 = 2.88 \times 22.84 + 37.7 \times 16.26 + 2.8 \times 10.36$$

$$+ 7.9 \times 7.16 + 10.4 \times 2.16 = 790 \text{ kips-ft}$$

Vertical load acting on each column:

$$V_1 = \frac{9.5 \times 25.7}{2150} = .114 \text{ kips/sq ft}^2$$

but, since the area of the column is assumed to be one square foot, this value is the total load stress in the column and is used to find the shear in beams. Then

$$V_1 = .114 \text{ kips/col}$$

and shear in beams:

$$V_1 = .114 + .079 = .193 \text{ kips/beam} \qquad \text{and so forth}$$

Moment at end of each column:

$$m_1 = .193 \times 4.5 = .87$$

$$m = .87 + .435 = 1.305 \text{ kips-ft/col} \qquad \text{and so forth}$$

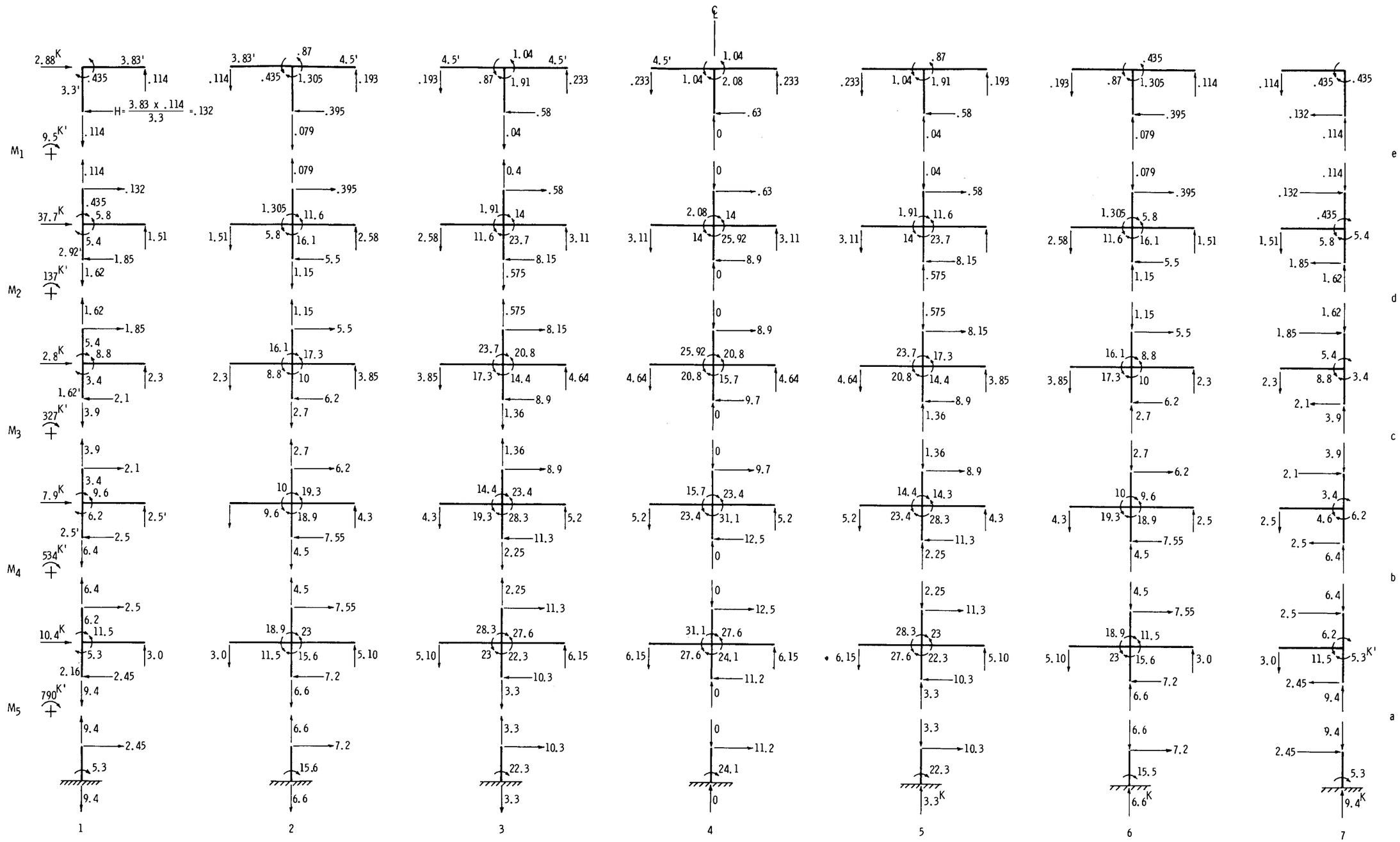

Figure C-3. Frame Analysis of Lateral Load

C. Check Stresses in Critical Column (Steel)

Column (a-6)

The properties of the column are:

Tubing 8 x 6 x 1/2 $I_x = 95.92 \text{ in}^4$ $S_x = 23.98 \text{ in}^3$ $r_x = 2.84 \text{ in}$

$A_s = 11.93 \text{ in}^2$ $I_y = 61.37 \text{ in}^4$ $S_y = 20.46 \text{ in}^3$ $r_y = 2.27 \text{ in}$

Dead load: $P_1 = 2400 + 34,400 + 2360 + 6600 + 8700 = 54,500 \text{ lb}$

Live load: $P_2 = 9 \times 9 \times 20 = 1620 \text{ lb}$

Exterior pressure acting on column from the roof:

$P = 9 \times 9 \times 144 \times 2.87 = 34,000 \text{ lb}$ (Stage 15)

Vertical load due to seismic force: 6600 lb

Total vertical load: $P = 54.4 + 1.6 + 34.0 + 6.6 = 96.6 \text{ kips}$

Temperature effect:

$\delta = 2.4 \times 10^{-2}$ (Case 2)

$P_{temp} = \delta/2 \left[3\ EI/(L/2)^3\right]$

$P_{temp} = 2.4/2 \times 10^{-2} \times 3 \times 29 \times 10^6 \times 95.92/26^3 = 5,710 \text{ lb}$

$M_{temp} = 5.710 \times (2'\text{-}2'') = 12.4 \text{ kips-ft}$

$M_{seismic} = 15.6 \text{ kips-ft}$

$M_{total} = M_{temp} + M_{seismic} = 12.4 + 15.6 = 28 \text{ kips-ft}$

$F_y = 36 \text{ ksi}$

Safety factor: 3.5

$F_a = 1/3.5 \times 36 = 10.3 \text{ ksi}$

$F_b = 1/3.5 \times 36 = 10.3 \text{ ksi}$

Assuming K = 1,
effective length = 4.33 ft

$f_a = 96.6/11.93 = 8.1$ ksi

$f_a/F_a = 8.1/10.3 = .785 > .15$

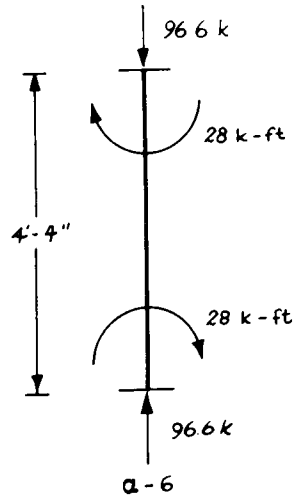

$\therefore$ use

$$\left(f_a/F_a\right) + \frac{C_m f_b}{\left(1 - f_a/F'_e\right) F_b} \leqslant 1.0$$

$$F'_e = \frac{149,000,000}{\left(KL_b/r_b\right)^2}$$

$$= \frac{149,000,000}{(1 \times 52/2.27)^2} = 286 \text{ ksi}$$

$f_b = 28/20.46 = 1.37, \quad C_m = .85$

then:

$$.785 + \frac{.85 \times 1.37}{(1 - 8.1/286)10.3} = .785 + .116 = .901 < 1.0 \quad \text{O.K.}$$

Column (a-7)

The properties of the column are:

Tubing 6 x 4 x 3/8" $\quad I_x = 28.55 \text{ in}^4 \quad S_x = 9.52 \text{ in}^3 \quad r_x = 2.1$ in

$A_s = 6.45 \text{ in}^2 \quad I_y = 15.1 \text{ in}^4 \quad S_y = 7.55 \text{ in}^3 \quad r_y = 1.53$ in

Dead load: $P_1 = 1200 + 17,200 + 1180 + 3300 + 4350 = 27,230$ lb

Live load: $P_2 = 9 \times 4.5 \times 20 = 810$ lb

Exterior pressure acting on column from the roof:

$P = 9 \times 4.5 \times 144 \times 2.87 = 17,000$ lb (Stage 15)

Vertical load due to seismic force = 9400 lb

Total vertical load: $P = 27.23 + .81 + 17.0 + 9.4 = 54.44$ kips

Temperature effect:

$\delta = 2.4 \times 10^{-2}$ (Case 2)

$P_{temp} = \delta/2 \left[3\ EI/(L/2)^3\right]$

$P_{temp} = 2.4/2 \times 10^{-2} \times 3 \times 29 \times 10^6 \times 28.55/26^3 = 1700$ lb

$M_{temp} = 1.700 \times (2'\text{-}2'') = 3.67$ kips-ft

$M_{seismic} = 5.3$ kips-ft

$M_{total} = M_{temp} + M_{seismic} = 3.67 + 5.3 \cong 9$ kips-ft

$F_y = 36$ ksi

Safety factor = 3.5

$F_a = 10.3$ ksi

$F_b = 10.3$ ksi

Assuming K = 1

effective length = 4.33 ft

$f_a = 55.44/6.45 = 8.45$ ksi

$f_a/F_a = 8.45/10.3 = .82 > .15$

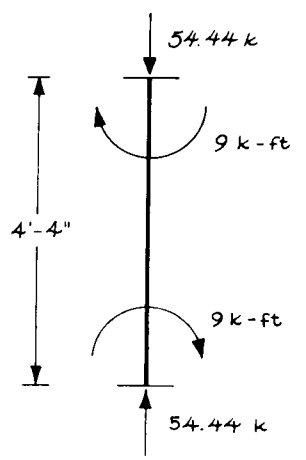

a-7

$\therefore$ use

$$(f_a/F_a) + \frac{C_m f_b}{\left(1 - f_a/F'_e\ F_b\right)} \leqslant 1.0$$

$$F'_e = \frac{149,000,000}{\left(KL_b/r_b\right)^2} = \frac{149,000,000}{\left(1 \times 52/1.53\right)^2} = 130 \text{ ksi}$$

$f_b = 9/7.55 = 1.19$ $\qquad$ $C_m = .85$

Then $.82 + \frac{.85 \times 1.19}{(1 - 8.45/130)\ 10.3} = .82 + .105 = .925 < 1.0$ O.K.

Column (a-5)

The properties of the column are:

Tubing 10 x 6 x 1/2 $I_x = 167.5\ in^4$ $S_x = 33.90\ in^3$ $r_x = 3.49$ in

$A_s = 13.93\ in^2$ $I_y = 76.54\ in^4$ $S_y = 25.5\ in^3$ $r_y = 2.34$ in

Dead load: $P_1 = 2400 + 34,400 + 2360 + 6600 + 8700 = 54,500$ lb

Live load: $P_2 = 9 \times 9 \times 20 = 1620$ lb

Exterior pressure acting on column from the roof:

$P = 34,000$ lb (Stage 15)

Vertical Load due to seismic load = 3300 lb

Total vertical load: $P = 54.5 + 1.6 + 34.0 + 3.3 = 93.4$ kips

Temperature effect:

$\delta = .8 \times 10^{-2}$ (Case 2)

$P_{temp} = \delta/2 \left[3\ EI/(L/2)^3\right]$

$= .8/2 \times 10^{-2} \times 3 \times 29 \times 10^6 \times 25.5/26^3 = 500$ lb

$M_{temp} = .500 \times (2'-2'') = 1.08$ kips-ft

$M_{seismic} = 22.3$ kips-ft

$M_{total} = M_{temp} + M_{seismic} = 1.08 + 22.3 \cong 23.5$ kips-ft

$F_y = 36$ ksi

Safety factor = 3.5

$F_a = 10.3$ ksi

$F_b = 10.3$ ksi

Assuming K = 1,

effective length = 4.33 ft

$f_a = 93.4/13.93 = 6.7$ ksi

$f_a/F_a = 6.7/10.3 = .65 > .15$

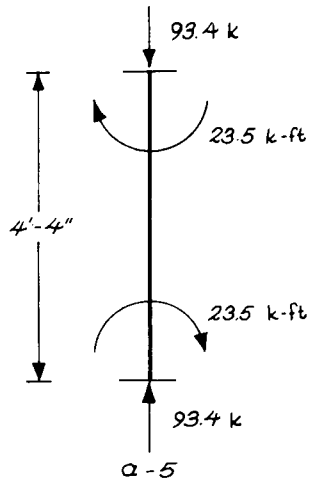

∴ use

$$(f_a/F_a) + \frac{C_m f_b}{\left(1 - f_a/F'_e\right) F_b} \leqslant 1.0$$

$$F'_e = \frac{149,000,000}{\left(KL_b/r_b\right)^2} = \frac{149,000,000}{\left(1 \times 52/2.34\right)^2} = 300 \text{ ksi}$$

$f_b = 23.5/25.5 = .92 \qquad C_m = .85$

Then $\quad .65 + \dfrac{.85 \times .92}{(1 - 6.7/300)\,10.3} = .65 + .08 = .73 < 1.0 \quad$ O.K.

<u>Column (b-5)</u>

The properties of the column are:

Tubing 8 x 6 x 1/2 $\quad I_x = 95.92 \text{ in}^4 \quad S_x = 23.98 \text{ in}^3 \quad r_x = 2.84$ in

$A_s = 11.93 \text{ in}^2 \quad I_y = 61.37 \text{ in}^4 \quad S_y = 20.46 \text{ in}^3 \quad r_y = 2.27$ in

Dead load: $P_1 = 2400 + 34,400 + 2360 + 6600 = 45,800$ lb

Live load: $P_2 = 9 \times 9 \times 20 = 1620$ lb

Exterior pressure acting on column from the roof:

$P = 34,000$ lb (Stage 15)

Vertical load due to seismic force = 2250 lb

Total vertical load: $P = 45.8 + 1.62 + 2.25 + 34 = 83.67$ lb

Temperature effect: assumed to be zero

$M_{total} = M_{seismic} = 28.3$ kips-ft

$F_y = 36$ ksi

Safety factor = 3.5

$F_a = 10.3$ ksi

$F_b = 10.3$ ksi

Assuming K = 1,

effective length = 5 ft

$f_a = 83.67/11.93 = 7$ ksi

$f_a/F_a = 7/10.3 = .68 > .15$

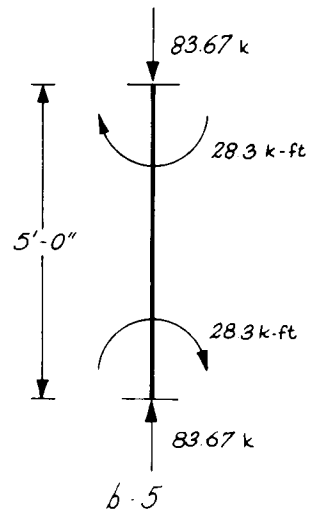

$\therefore$ use

$$(f_a/F_a) + \frac{C_m f_b}{(1-f_a/F'_e)\,F_b} \leqslant 1.0$$

$$F'_e = \frac{149,000,000}{(KL_b/r_b)^2} = \frac{149,000,000}{(1 \times 60/2.27)^2} = 214 \text{ ksi}$$

$f_b = 28.3/20.46 = 1.39 \quad C_m = .85$

Then: $.68 + \dfrac{.85 \times 1.39}{(1-7/214)\,10.3} = .68 + .12 = .80 < 1.0$ O.K.

D. Check Stress in Mid-longitudinal Wall (Sandwich Steel Wall)

$P_{max} = 12.2$ psi

σ allow = 17,500 psi

Assume a sheet of
a x b = 9' x 1.5'

Assuming supported end:
a/b = 6, $\beta = .75$

$$S_{max} = \beta \frac{wb^2}{t^2} = .75 \frac{12.2 \times 18^2}{(3/8)^2}$$

$$= 7900 \text{ psi} < 17,500$$

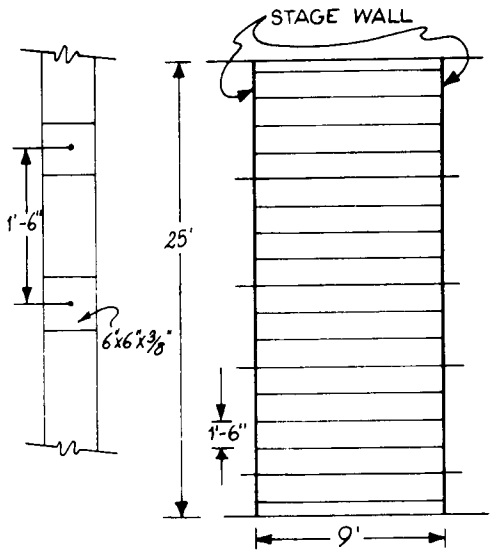

Assuming fixed end:
a/b = 6, $\beta = .5$

$$S_{max} = \beta \frac{wb^2}{t^2} = .5 \frac{12.2 \times 18^2}{(3/8)^2} = 5300 \text{ psi} < 17,500$$

Assume under vacuum sheet plate would be: a x b = 5' x 9', p = 3 psi

For fixed end plate:

a/b = 5/9 = 1.8 $\beta = .49$

$$\sigma = .49 \times \frac{3 \times 60^2}{(3/8)^2} = 14,200 \text{ psi} < 17,500$$

For supported end plate:

a/b = 1.8, $\beta = .57$

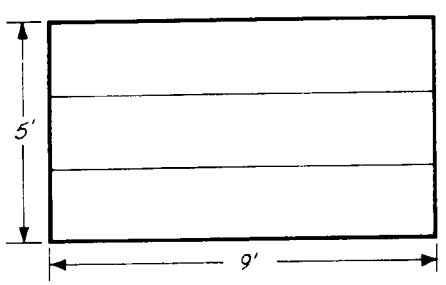

$$\sigma = .57 \times \frac{3 \times 60^2}{(3/8)^2} = 16,400 \text{ psi} < 17,500$$

Temperature effect on mid-wall

Allowable stress for temperature effect = 22,000 psi

$$\sigma = -\frac{\Delta T \alpha E}{1-\nu} = \frac{.65 \times 10^{-5} \times 29 \times 10^{6}}{(1-.29)} \Delta T = 22,000$$

$$\Delta T = \frac{22,000 \times .71}{.65 \times 290} = 83 \text{ F}$$

$\Delta T = 83$ F is allowable temperature change at startup which is more than that allowed in concrete slab. $\Delta T_{slab} = 53$ F

E. Effect of Temperature on Reinforced Concrete

Gradient in concrete slab

Assuming that the surface of the concrete slab is subjected to the temperature of T_o F, it is first necessary to determine the temperature gradient in concrete.

The time after which the temperature of the back of the slab will increase can be determined from the following heat equations:

Assume:

$T = T_1 - T_o$

T = differential temperature of the face of the slab from ambient

T_o = ambient temperature

T_1 = absolute temperature of the face of the slab

Heat conduction, Fourier's law:

$$h_i = -k_{ij} \frac{\partial T}{\partial x_j}$$

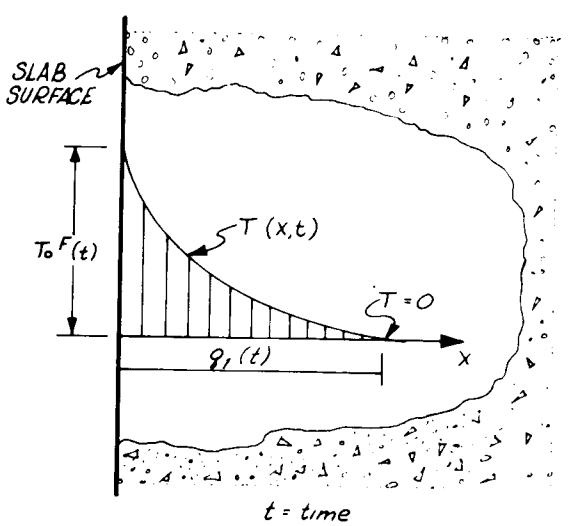

Definition of specific heat:

$$-\frac{\partial h_i}{\partial x_i} = \rho C_v \frac{\partial T}{\partial t}$$

The application of the variational principle:

$$\dot{H}_i = h_i \qquad \frac{\partial(\ )}{\partial x_i} = (\ )^{\cdot}$$

in which the heat flow vector H_i related to heat flux h_i.

In the one-dimensional problem, it may be assumed that only one component H_x is different from zero and that it is a function of x alone.

Then:

$$\frac{\partial H_x}{\partial x} = -\rho C_v T$$

$$T(x, t) = T_o(t)\left[1 - \frac{x}{q_1(t)}\right]^2$$

t = time

In which:

ρ = density of slab

C_v = specific heat of slab at constant volume

Then:

$$H_x(x, t) = \rho C_v \int_x^{q_1(t)} T(\xi, t) = \rho C_v T_o\left(\frac{q_1}{3} - x + \frac{x^2}{q_1} - \frac{x^3}{3q_1^2}\right)$$

Solving the above equation for $q_1(t)$ gives:

$$q_1^2(t) = \frac{147}{13} \frac{K}{\rho C_v} [T_o(t)]^{-15/13} \int_o^t [T_o(\tau)]^{15/13} d\tau$$

In which K = thermal conductivity of slab

In the case $T_o(t) = T_o$:

$$q_1 = 3.36\sqrt{\frac{Kt}{\rho C_v}}$$

The constants for concrete are:

$K = .47-.81$ BTU/hr/ft^2/F/ft

$\rho = 120-150$ lbs/ft^3

$C_v = .15-.25$ BTU/lb/F

Mean $C_v = .15$ BTU/lb/F

Therefore the time after which the temperature of the back of the two-foot slab begins to rise would be:

$$q_1^{ft} = 3.36\sqrt{\frac{.8 \times t}{120 \times .156}} = .695\, t^{1/2}$$

from which, for $q_1 = 2$ feet, $t = 8.3$ hours

Maximum tolerable differential temperature in case of thermal shock

Assuming that the surface of concrete slab is suddenly subjected to a temperature change of ΔT, a compressive stress σ is developed in the surface layer of the headed face.

$$\sigma = \Delta T\, \alpha E / 1 - \nu$$

In which, for concrete:

$\sigma = 1/3.5 \times 4000 = 1140$ psi

$\alpha = .60 \times 10^{-5}$ in/in/F

$E = 29/8 \times 10^{6}$ psi

$\nu = .15$

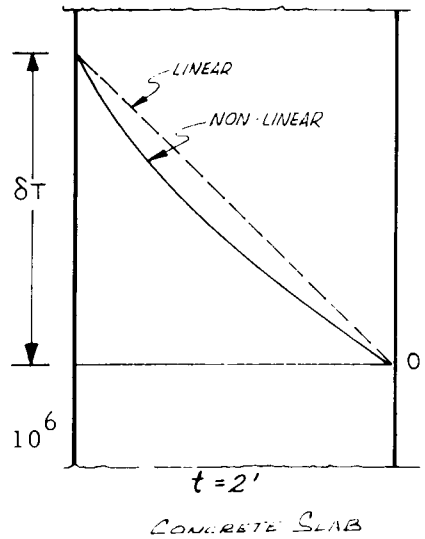

Then:

$1140 = \Delta T \times .60 \times 10^{-5} \times 29/8 \times 10^{6}$

$\Delta T = 53$ F

Maximum tolerable differential temperature in case of fixed ends slab

Assuming tolerable differential temperature is δT, the slab can be assumed to be a spherical curvature with radius

$$R = \frac{t}{\delta T \alpha}$$

Then:

$$R = \frac{2}{120 \times .60 \times 10^{-5}} = 2775 \text{ ft}$$

Now, if the edges are fixed, the plate will be held flat by uniform edge-moments and maximum bending stress will be

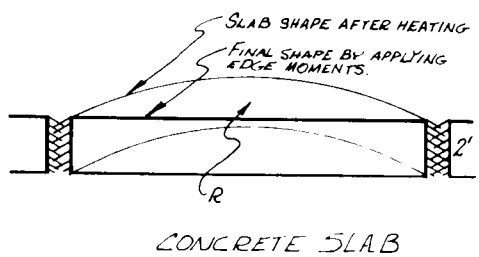

$\sigma = 1/2\ \delta T \alpha E / 1 - \nu$

and for concrete

$1140 = 1/2\ \delta T \times .60 \times 10^{-5} \times 29/8 \times 10^{6}$

Then:

$\delta T = 106$ F

Tolerance of expansion joint of concrete slab

During operation, the average differential temperature of the face of the slab is $\Delta T = 170.84$ F. Assuming that the differential temperature of back of the slab is zero (ambient), the expansion of the face of the slab would be:

$$\Delta L = .60 \times 10^{-5} \times 540 \times 170.84 = .552 \text{ in.}$$

The radius of spherical slab will be

$$R = \frac{t}{\Delta T \alpha} = \frac{2}{170.84 \times .60 \times 10^{-5}} = 1960 \text{ ft}$$

And the tolerance of expansion joint (d) necessary to prevent the increase of stress in slab would be:

$$d_1 = 1/2 \times .552 = .276 \text{ in.}$$
$$d = 2d_1 = 2 \times .276 = .552 \text{ in.}$$

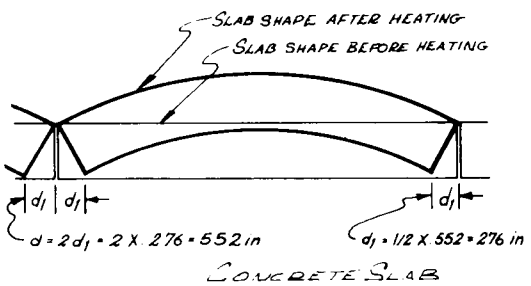

Directional control of expansion of the slab

The floor slab should be allowed to expand because of temperature effect. The slab, also, has to be attached to the foundation to control the direction of expansion and to avoid the movement of the slab due to earthquake. The problem can be solved by using either a key-type construction, or Teflon bearing pad at points shown on the drawing.

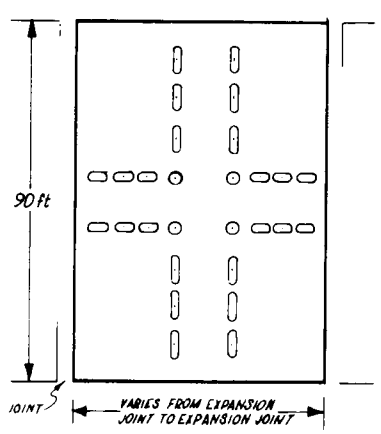

- ⊙ Motion restricted in all directions
- ⊂⊃ Motion restricted on short axis

F. Barrel-Vault Shell Analysis

The type of structural system treated here consists of circular cylindrical shells, longitudinal edge beams, and diaphragms and transverse frames at the ends of the shell (Figure C-4). The load acting on the shell, a pressure of 12.2 psi, is assumed to act inward. The same result, with reverse sign, would be valid for the internal pressure acting outward. The analysis begins with the calculation of geometric data and constant data. The final result is based on the following steps:

1. Calculation of the stress resulting from the membrane theory.
2. Calculation of constant A's of the general solution of the moment $M\phi$ corresponding to unit edge loads acting on the shell. (Ref. Stresses in Shells, by W. Flügge, 1966)
3. Calculation of displacements and rotations at the edge of the shell corresponding to unit edge loads.
4. Investigation of the compatibility equation of the shell and edge beam.
5. Determination of the value of constant A's corresponding to the true force resultant of the edge.
6. Computation of the true value of the force resultant of the edge.
7. Calculation of the stresses in the shell and plotting of the results.

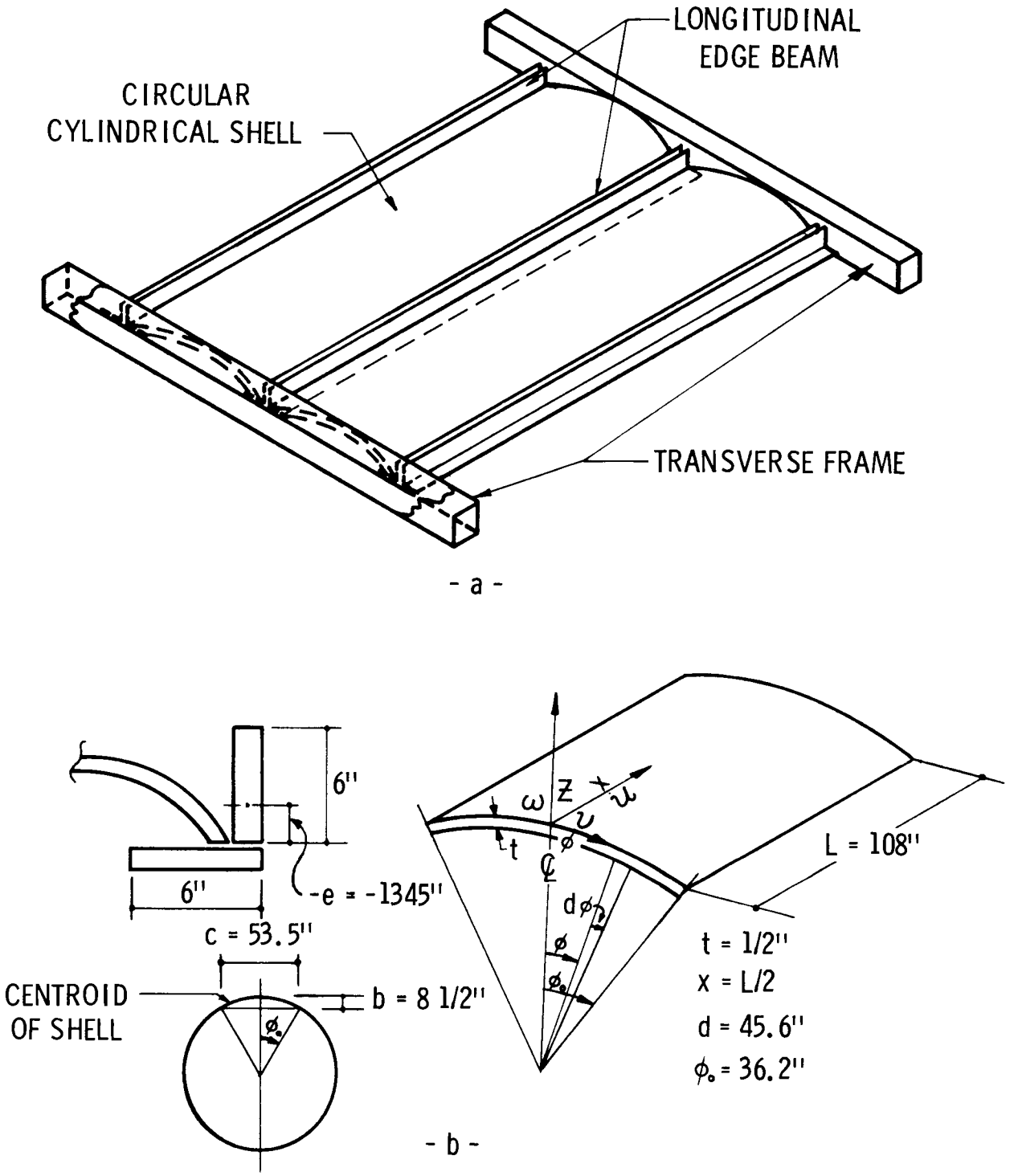

Figure C-4. Barrel-Vault Shell Structure

1. <u>Geometric Data</u>

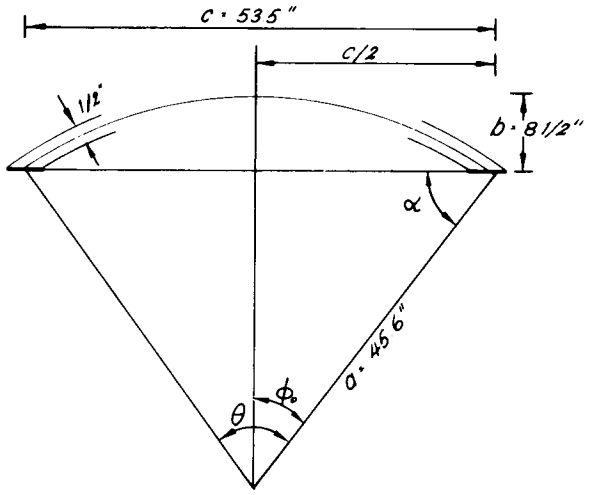

$$a = \frac{4b^2 + c^2}{8b}$$

$$c = 2a \sin\phi_0$$

Then:

$$a = \frac{4(8.5)^2 + 53.5^2}{8 \times 8.5}$$

$$a = \frac{3100}{68} = 45.6 \text{ in}$$

$$\sin\phi_0 = \frac{c}{2a} = \frac{53.5}{2(45.6)} = .59 \qquad \cos\phi_0 = .807$$

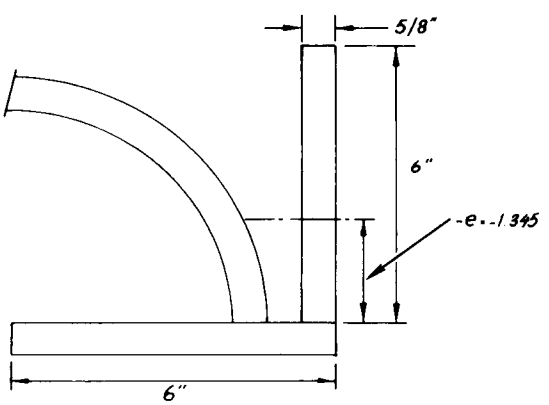

$\phi_0 = 36.2^0$

$\alpha = 53.8^0$

$\theta_1 = 72.4^0$

$L = 108$ in

$$a/L = \frac{45.6}{108} = .424$$

$a = 45.6$ in

$t = 1/2$ in

$$a/t = \frac{45.6}{1/2} = 91.2 \approx 100$$

$A = 7.5 \text{ in}^2$

$I_x = 32 \text{ in}^4$

$W = 25.6$ lb/ft

2. <u>Constant Data</u>

$\nu = .29$

$\lambda = \frac{n\pi}{L} a = \frac{1 \times \pi}{108''} \times 45.6'' = 1.33 \quad [0] \quad \lambda^2 = 1.77 \qquad \underline{n = 1}$

$K = \frac{Et^3}{12(1-\nu^2)} = \frac{Ex(1/2)^3 \text{ in}^3}{12(1-.29^2)} = .0114E = .0228Et \quad \left[\text{lb-in}\right]$

$\underline{E \equiv \text{lb/in}^2}$

$D = \frac{Et}{(1-\nu^2)} = \frac{E \times 1/2 \text{ in}}{.916} = \frac{E}{1.832} \quad \left[\text{lb/in}\right]$

$\kappa = \frac{t^2}{12a^2} = \frac{1/4 \text{ in}^2}{12 \times 45.6^2 \text{ in}^2} = \frac{1}{100{,}400} \quad [0]$

$\zeta^4 = \lambda^2 \sqrt{\frac{(1-\nu^2)}{\kappa}} = 1.77 \sqrt{100{,}400 \times .916} = 536 \qquad [0]$

$\zeta^4 = 536 \quad \zeta^3 = 111 \quad \zeta^2 = 23.1 \quad \zeta = 4.81 \qquad [0]$

$\phi_0 = 36.2^0 = .631 \text{ rad.}$

$\chi_1 = \mu_2 = \zeta\sqrt{n} \quad \text{Cos } \frac{\pi}{8} = 4.81 \times .924 = 4.45 \quad [0]$

$\chi_2 = \mu_1 = \zeta\sqrt{n} \quad \text{Sin } \frac{\pi}{8} = 4.81 \times .383 = 1.84$

$\text{Cosh } \chi_1\phi_0 \text{ Cos } \mu_1\phi_0 = 8.3309 \times .3955 = 3.3$

$\text{Sinh } \chi_1\phi_0 \text{ Sin } \mu_1\phi_0 = 8.2696 \times .918 = 7.58$

$\text{Cosh } \chi_2\phi_0 \text{ Cos } \mu_2\phi_0 = 1.756 \times (-.9456) = -1.66$

$\text{Sinh } \chi_2\phi_0 \text{ Sin } \mu_2\phi_0 = 1.444 \times .325 = .469$

$\text{Sinh } \chi_1\phi_0 \text{ Cos } \mu_1\phi_0 = 8.2696 \times .3955 = 3.26$

$\text{Cosh } \chi_1\phi_0 \text{ Sin } \mu_1\phi_0 = 8.3309 \times .918 = 7.65$

$\text{Sinh } \chi_2\phi_0 \text{ Cos } \mu_2\phi_0 = 1.444 \times (-.9456) = -1.365$

$\text{Cosh } \chi_2\phi_0 \text{ Sin } \mu_2\phi_0 = 1.756 \times .325 = .57$

3. <u>Load</u>

$Pr = 12.2$ psi $= 1760$ psf

Load in terms of Fourier Series:

(Ref. Stresses in Shells, by W. Flügge)

$$(Prn)_x = -\frac{4}{\pi}\frac{Pr}{n} = -\frac{4}{\pi}Pr \qquad n = 1$$

Pr is inward in calculation.

4. <u>Membrane Stress Resultant</u>

$$N\phi n = (Prn) \times r = -\frac{4}{\pi}Pr \times a = -8510 \text{ lb/ft}$$

$$N'\phi 1 = -8510 \sin\frac{\pi}{L}x \text{ lb/ft} \qquad n = 1$$

At $x = L/2$: $N'\phi 1 = -8510$ lb/ft

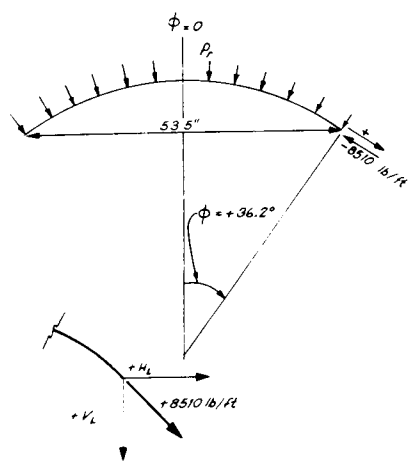

Now we have to add line load $-N'\phi 1$ to remove the error

$$-N'\phi 1 = -(-8510) = +8510 \text{ lb/ft}$$

$-N'\phi 1$ will be resolved into:

$$H_L = +8510 \times \cos\phi_0 = 8510 \times .807 = +6860 \text{ lb/ft}$$

$$V_L = +8510 \times \sin\phi_0 = 8510 \times .59 = +5040 \text{ lb/ft}$$

5. Bending Theory of Circular Cylindrical Shell

Equilibrium Equation:

$$N'_x + N^{\cdot}_{\phi x} + P_x a = 0$$

$$N^{\cdot}_{\phi} + N'_{x\phi} - Q_{\phi} + P_{\phi} a = 0 \qquad a \frac{\partial(\ )}{\partial x} = (\ )'$$

$$Q^{\cdot}_{\phi} + Q'_x + N_{\phi} - P_r a = 0 \qquad \frac{\partial(\ )}{\partial \phi} = (\ )^{\cdot}$$

$$M^{\cdot}_{\phi} + M'_{x\phi} - aQ_{\phi} = 0 \qquad a = \text{radius}$$

$$M'_x + M^{\cdot}_{\phi x} - aQ_x = 0 \qquad L = \text{length of shell}$$

$$aN_{x\phi} - aN_{\phi x} + M_{\phi x} = 0$$

If L is much greater than a, assume that N_x, N_{ϕ}, $N_{x\phi}$, M_{ϕ}, Q_{ϕ} and the rest equal zero (barrel vault analysis), and consider $P_x = P_{\phi} = P_r = 0$ for edge loading.

Then:

$$Q_{\phi} = \frac{1}{a} M^{\cdot}_{\phi}$$

$$N_{\phi} = -\frac{1}{a} M^{\cdot\cdot}_{\phi}$$

$$N'_{x\phi} = \frac{1}{a} (M^{\cdot}_{\phi} + M^{\cdot\cdot\cdot}_{\phi})$$

$$N''_x = -\frac{1}{a} (M^{\cdot\cdot}_{\phi} + M^{\cdot\cdot\cdot\cdot}_{\phi})$$

From which:

$$M^{\cdot\cdot\cdot\cdot}_{\phi} + (2+\nu) M''^{\cdot\cdot\cdot}_{\phi} + 2M^{\cdot\cdot\cdot}_{\phi} + (1+2\nu) M^{IV\cdot\cdot}_{\phi} + 2(2+\nu) M''^{\cdot\cdot}_{\phi}$$
$$+ M^{\cdot\cdot}_{\phi} + \nu M^{VI\cdot\cdot}_{\phi} + (1+\nu)^2 M^{IV\cdot\cdot}_{\phi} + (2+\nu) M''^{\cdot\cdot}_{\phi} + \frac{1-\nu^2}{K} M^{IV}_{\phi} = 0$$

solution of that is:

$$M_\phi = C\, e^{m\phi} \operatorname{Sin} \frac{\lambda x}{a} \qquad \text{with} \qquad \lambda = \frac{n\pi a}{L}$$

$$n = 1,\ 3,\ \ldots\ldots\ \infty$$

in which: $C \longrightarrow A_1,\ A_2,\ B_1,\ B_2$

$$m^8 + 2m^6 + m^4 + \frac{1-\nu^2}{\kappa}\lambda^4 = 0 \qquad \text{with} \qquad \kappa = \frac{t^2}{12a^2}$$

$$m_1 = \pm(\chi_1 + i\mu_1) \qquad m_2 = \pm(\chi_2 \pm i\mu_2)$$

$$\text{or:} \qquad m = \pm\sqrt{-1/2 \pm \sqrt{1/4 \pm i\lambda^2 \sqrt{\frac{1-\nu^2}{\kappa}}}} \qquad (A)$$

let:

$$\lambda^2 \sqrt{\frac{1-\nu^2}{\kappa}} = 2\pi^2 \sqrt{3(1-\nu^2)} \times \frac{a^3}{L^2 t} \times n^2 = \zeta^4\, n^2$$

Simplifying (A) $\qquad m = \pm\sqrt{\pm\sqrt{\pm i n^2}} \cdot \zeta$

and then:

$$\chi_1 = \mu_2 = \zeta\sqrt{n} \operatorname{Cos}\frac{\pi}{8} = \zeta\sqrt{n}\,\varrho$$

$$\varrho = 1/2\ \sqrt{2+\sqrt{2}} = .925$$

$$\chi_2 = \mu_1 = \zeta\sqrt{n} \operatorname{Sin}\frac{\pi}{8} = \zeta\sqrt{n}\underbrace{(1/2\ \sqrt{2-\sqrt{2}})}_{.383}$$

From which, for Symmetric Shells:

$$M_\phi = a\Big[A_1 \operatorname{Cosh}\chi_1\phi \operatorname{Cos}\mu_1\phi + B_1 \operatorname{Sinh}\chi_1\phi \operatorname{Sin}\mu_1\phi + A_2 \operatorname{Cosh}\chi_2\phi \operatorname{Cos}\mu_2\phi + B_2 \operatorname{Sinh}\chi_2\phi \operatorname{Sin}\mu_2\phi\Big] \operatorname{Sin}\frac{n\pi x}{L}$$

the other unknowns will then be found.

The equations of the unknowns, N_x, N_ϕ, $N_{x\phi}$, M_ϕ, O_ϕ, will be taken from Table 5*, in which A_1, B_1, A_2, B_2 should be found.

*(page 260 of the reference book)

6. Unit Edge Loads

Calculate Constant $\underset{a}{\underline{A's}}$; $\underset{b}{\underline{\text{displacements}}}$, $\underset{c}{\underline{\text{rotation at edge}}}$ (I)

$$M\phi n = \bar{M}_{\phi n} \operatorname{Sin} \frac{n\pi x}{L} = a \Big[A_1 \operatorname{Cosh}\chi_1\phi_0 \operatorname{Cos}\mu_1\phi_0 + B_1 \operatorname{Sinh}\chi_1\phi_0 \operatorname{Sin}\mu_1\phi_0 + A_2 \operatorname{Cosh}\chi_2\phi_0 \operatorname{Cos}\mu_2\phi_0 + B_2 \operatorname{Sinh}\chi_2\phi_0 \operatorname{Sin}\mu_2\phi_0 \Big] \operatorname{Sin}\frac{n\pi x}{L}$$

$$Q\phi n = \bar{Q}_{\phi n} \operatorname{Sin} \frac{n\pi x}{L} = \zeta \varrho \Big[(A_1 + .414B_1) \operatorname{Sinh}\chi_1\phi_0 \operatorname{Cos}\mu_1\phi_0 + (-.414A_1 + B_1) \operatorname{Cosh}\chi_1\phi_0 \operatorname{Sin}\mu_1\phi_0 + (.414A_2 + B_2) \operatorname{Sinh}\chi_2\phi_0 \operatorname{Cos}\mu_2\phi_0 + (-A_2 + .414B_2) \operatorname{Cosh}\chi_2\phi_0 \operatorname{Sin}\mu_2\phi_0 \Big] \operatorname{Sin}\frac{n\pi x}{L}$$

$$N\phi n = \bar{N}_{\phi n} \operatorname{Sin} \frac{n\pi x}{L} = -\zeta^2/\sqrt{2} \Big[(A_1 + B_1) \operatorname{Cosh}\chi_1\phi_0 \operatorname{Cos}\mu_1\phi_0 + (-A_1 + B_1) \operatorname{Sinh}\chi_1\phi_0 \operatorname{Sin}\mu_1\phi_0 + (-A_2 + B_2) \operatorname{Cosh}\chi_2\phi_0 \operatorname{Cos}\mu_2\phi_0 + (-A_2 - B_2) \operatorname{Sinh}\chi_2\phi_0 \operatorname{Sin}\mu_2\phi_0 \Big] \operatorname{Sin}\frac{n\pi x}{L}$$

$$N_x\phi n = \bar{N}_{x\phi n} \operatorname{Cos} \frac{n\pi x}{L} = \frac{\zeta^3}{\lambda} \varrho \Big[(.414A_1 + B_1) \operatorname{Sinh}\chi_1\phi_0 \operatorname{Cos}\mu_1\phi_0 + (-A_1 + .414B_1) \operatorname{Cosh}\chi_1\phi_0 \operatorname{Sin}\mu_1\phi_0 + (-A_2 - .414B_2) \operatorname{Sinh}\chi_2\phi_0 \operatorname{Cos}\mu_2\phi_0 + (.414A_2 - B_2) \operatorname{Cosh}\chi_2\phi_0 \operatorname{Sin}\mu_2\phi_0 \Big] \operatorname{Cos}\frac{n\pi x}{L}$$

1. $\bar{N}_{\phi n} = 1$ lb/ft Rest = 0 (II)

2. $\bar{Q}_{\phi n} = 1$ lb/ft Rest = 0

3. $\bar{N}_{x\phi n} = 1$ lb/ft Rest = 0

4. $\bar{M}_{\phi n} = 1$ lb-ft/ft Rest = 0

a. Determining value of constants A_1, B_1, A_2, B_2, for unit edge loads.

Then equations (I) in the form of (II) are:

$\underline{\bar{N}_{\phi 1} = 1 \text{ lb/ft}}$

$$A_1\ 3.3 + B_1\ 7.58 + A_2\ (-1.66) + B_2\ .469 = 0$$

$$(A_1 + .414B_1)\ 3.26 + (-.414A_1 + B_1)\ 7.65 + (.414A_2 + B_2)(-1.365) + (-A_2 + .414B_2)\ .57 = 0$$

$$\left[(A_1 + B_1)\ 3.3 + (-A_1 + B_1)\ 7.58 + (-A_2 + B_2)(-1.66) + (-A_2 - B_2)\ .469\right] \left(-\frac{23.1}{\sqrt{2}}\right) = 1 \text{ lb/ft}$$

$$(.414A_1 + B_1)\ 3.26 + (-A_1 + .414B_1)\ 7.65 + (-A_2 - .414B_2)(-1.365) + (.414A_2 - B_2)\ .57 = 0$$

$\underline{\bar{Q}_{\phi 1} = 1 \text{ lb/ft}}$

$$A_1\ 3.3 + B_1\ 7.58 + A_2\ (-1.66) + B_2\ .469 = 0$$

$$\left[(A_1 + .414B_1)\ 3.26 + (-.414A_1 + B_1)\ 7.65 + (.414A_2 + B_2)(-1.365) + (-A_2 + .414B_2).57\right] 4.81 \times .925 = 1 \text{ lb/ft}$$

$$(A_1 + B_1)\ 3.3 + (-A_1 + B_1)\ 7.58 + (-A_2 + B_2)(-1.66) + (-A_2 - B_2)\ .469 = 0$$

($\overline{Q}_{\phi 1}$ = 1 lb/ft cont'd)

$$(.414A_1 + B_1)\ 3.26 + (-A_1 + .414B_1)\ 7.65$$
$$+ (-A_2 - .414B_2)(-1.365) + (.414A_2 - B_2).57 = 0$$

$\overline{N}_{x\phi 1}$ = 1 lb/ft

$$A_1\ 3.3 + B_1\ 7.58 + A_2\ (-1.66) + B_2\ .469 = 0$$

$$(A_1 + .414B_1)\ 3.26 + (-.414A_1 + B_1)\ 7.65$$
$$+ (.414A_2 + B_2)(-1.365) + (-A_2 + .414B_2).57 = 0$$

$$(A_1 + B_1)\ 3.3 + (-A_1 + B_1)\ 7.58 + (-A_2 + B_2)(-1.66)$$
$$+ (-A_2 - B_2).469 = 0$$

$$\Big[(.414A_1 + B_1)\ 3.26 + (-A_1 + .414B_1)\ 7.65$$
$$+ (-A_2 - .414B_2)(-1.365)$$
$$+ (.414A_2 - B_2).57\Big](-\frac{111}{1.33} \times .925) = 1 \text{ lb/ft}$$

$\overline{M}_{\phi 1}$ = 1 lb-ft/ft

$$\Big[A_1\ 3.3 + B_1\ 7.58 + A_2\ (-1.66) + B_2\ .469\Big]\ \frac{45.6}{12} =$$
$$= 1 \text{ lb-ft/ft}$$

$$(A_1 + .414B_1)\ 3.26 + (-.414A_1 + B_1)\ 7.65$$
$$+ (.414A_2 + B_2)(-1.365) + (-A_2 + .414B_2).57 = 0$$

$$(A_1 + B_1)\ 3.3 + (-A_1 + B_1)\ 7.58 + (-A_2 + B_2)(-1.66)$$
$$+ (-A_2 - B_2).469 = 0$$

$$(.414A_1 + B_1)\ 3.26 + (-A_1 + .414B_1)\ 7.65$$
$$+ (-A_2 - .414B_2)(-1.365) + (.414A_2 - B_2).57 = 0$$

Or:

$\underline{\bar{N}_{\phi 1} = 1 \text{ lb/ft}}$

$$3.3A_1 + 7.58B_1 - 1.66A_2 + .469B_2 = 0$$
$$.102A_1 + 8.998B_1 - 1.134A_2 - 1.13B_2 = 0$$
$$- 4.28A_1 + 10.88B_1 + 1.191A_2 - 2.129B_2 = - .0611$$
$$- 6.302A_1 + 6.418B_1 + 1.13A_2 - .006B_2 = 0$$

$\underline{\bar{Q}_{\phi 1} = 1 \text{ lb/ft}}$

$$3.3A_1 + 7.58B_1 - 1.66A_2 + .469B_2 = 0$$
$$.102A_1 + 8.998B_1 - 1.134A_2 - 1.13B_2 = .225$$
$$- 4.28A_1 + 10.88B_1 + 1.191A_2 - 2.129B_2 = 0$$
$$- 6.302A_1 + 6.418B_1 + 1.13A_2 - .006B_2 = 0$$

$\underline{\bar{N}_{x\phi 1} = 1 \text{ lb/ft}}$

$$3.3A_1 + 7.58B_1 - 1.66A_2 + .469B_2 = 0$$
$$.102A_1 + 8.998B_1 - 1.134A_2 - 1.13B_2 = 0$$
$$- 4.28A_1 + 10.88B_1 + 1.191A_2 - 2.129B_2 = 0$$
$$- 6.302A_1 + 6.418B_1 + 1.13A_2 - .006B_2 = - .01295$$

$\underline{\bar{M}_{\phi 1} = 1 \text{ lb-ft/ft}}$

$$3.3A_1 + 7.58B_1 - 1.66A_2 + .469B_2 = .263$$
$$.102A_1 + 8.998B_1 - 1.134A_2 - 1.13B_2 = 0$$
$$- 4.28A_1 + 10.88B_1 + 1.191A_2 - 2.129B_2 = 0$$
$$- 6.302A_1 + 6.418B_1 + 1.13A_2 - .006B_2 = 0$$

$$B_2 = -7.05A_1 - 16.18B_1 + 3.55A_2$$

$$\begin{cases} 8.052A_1 + 27.248B_1 - 5.14A_2 = 0 \\ 10.72A_1 + 45.28B_1 - 6.359A_2 = -.0611 \\ -6.26A_1 + 6.515B_1 + 1.109A_2 = 0 \end{cases} \qquad \bar{N}_{\phi 1} = 1 \text{ lb/ft}$$

$$B_2 = -7.05A_1 - 16.18B_1 + 3.55A_2$$

$$\begin{cases} 8.052A_1 + 27.248B_1 - 5.14A_2 = .225 \\ 10.72A_1 + 45.28B_1 - 6.359A_2 = 0 \\ -6.26A_1 + 6.515B_1 + 1.109A_2 = 0 \end{cases} \qquad \bar{Q}_{\phi 1} = 1 \text{ lb/ft}$$

$$B_2 = -7.05A_1 - 16.18B_1 + 3.55A_2$$

$$\begin{cases} 8.052A_1 + 27.248B_1 - 5.14A_2 = 0 \\ 10.72A_1 + 45.28B_1 - 6.359A_2 = 0 \\ -6.26A_1 + 6.515B_1 - 1.109A_2 = -.01295 \end{cases} \qquad \bar{N}_{x\phi 1} = 1 \text{ lb/ft}$$

$$B_2 = .09A_1 + 7.95B_1 - 1.0A_2$$

$$\begin{cases} 3.342A_1 + 11.20B_1 - 2.13A_2 = .263 \\ -4.472A_1 - 6.04B_1 + 3.32A_2 = 0 \\ -6.302A_1 + 6.37B_1 + 1.136A_2 = 0 \end{cases} \qquad \bar{M}_{\phi 1} = 1 \text{lb-ft/ft}$$

or:

$$B_2 = -7.05A_1 - 16.18B_1 + 3.55A_2$$
$$A_2 = +5.64A_2 - 5.89B_1$$

$$\begin{cases} -20.998A_1 + 57.548B_1 = 0 \\ -25.18A_1 + 82.68B_1 = -.0611 \end{cases} \qquad \bar{N}_{\phi 1} = 1 \text{ lb/ft}$$

$$B_2 = -7.05A_1 - 16.18B_1 + 3.55A_2$$
$$A_2 = +5.64A_1 - 5.89B_1$$

$$\begin{cases} -20.998A_1 + 57.548B_1 = .225 \\ -25.18A_1 + 82.68B_1 = 0 \end{cases} \qquad \bar{Q}_{\phi 1} = 1 \text{ lb/ft}$$

$$B_2 = -7.05A_1 - 16.18B_1 + 3.55A_2$$
$$A_2 = 1.562A_1 + 5.3B_1$$
$$\begin{cases} .8A_1 + 11.68B_1 = 0 \\ -4.528A_1 + 12.395B_1 = -.01295 \end{cases} \qquad \bar{N}_{x\phi 1} = 1 \text{ lb/ft}$$

$$B_2 = .09A_1 + 7.95B_1 - 1.0A_2$$
$$A_2 = 5.55A_1 - 5.61B_1$$
$$\begin{cases} -8.508A_1 + 23.22B_1 = .263 \\ 13.938 - 24.68B_1 = 0 \end{cases} \qquad \bar{M}_{\phi 1} = 1 \text{ lb-ft/ft}$$

Finally, the constants A_1, B_1, A_2, B_2 for unit load of each case will be as follows:

$\bar{N}_{\phi 1} = 1$ lb/ft	A's [lb/ft]
$A_1 = -.01268$	$B_1 = -.00461$
$A_2 = -.0446$	$B_2 = +.0052$

$\bar{Q}_{\phi 1} = 1$ lb/ft	
$A_1 = -.0662$	$B_1 = -.0202$
$A_2 = -.2552$	$B_2 = -.1165$

$\bar{N}_{x\phi 1} = 1$ lb/ft	
$A_1 = .00241$	$B_1 = -.0001653$
$A_2 = .002885$	$B_2 = -.00405$

$\bar{M}_{\phi 1} = 1$ lb-ft/ft	
$A_1 = .0574$	$B_1 = .0324$
$A_2 = .1365$	$B_2 = .1257$

b. Displacements υ_1, ω_1 and longitudinal stress for unit edge loads

$$\upsilon_n = \frac{a^3}{K\zeta^3 n^{3/2}} \times .925 \Big[(-.414A_1 + B_1)\mathrm{Sinh}\chi_1\phi_0 \ \mathrm{Cos}\mu_1\phi_0 + (-A_1 - .414B_1)\mathrm{Cosh}\chi_1\phi_0 \ \mathrm{Sin}\mu_1\phi_0 + (A_2 - .414B_2)\mathrm{Sinh}\chi_2\phi_0 \ \mathrm{Cos}\mu_2\phi_0 + (.414A_2 + B_2)\mathrm{Cosh}\chi_2\phi_0 \mathrm{Sin}\mu_2\phi_0 \Big] \mathrm{Sin}\ \frac{n\pi x}{L}$$

$$\omega_n = -\frac{a^3}{\sqrt{2}\ K\zeta\ \sqrt{n}} \Big[(-A_1 + B_1)\mathrm{Cosh}\chi_1\phi_0 \ \mathrm{Cos}\mu_1\phi_0 + (-A_1 - B_1)\mathrm{Sinh}\chi_1\phi_0 \ \mathrm{Sin}\mu_1\phi_0 + (A_2 + B_2)\mathrm{Cosh}\chi_2\phi_0 \ \mathrm{Cos}\mu_2\phi_0 + (-A_2 + B_2)\mathrm{Sinh}\chi_2\phi_0 \ \mathrm{Sin}\mu_2\phi_0 \Big] \mathrm{Sin}\ \frac{n\pi x}{L}$$

$$N_{xn} = \frac{\zeta^4 n^2}{\lambda^2} \Big[B_1 \ \mathrm{Cosh}\chi_1\phi_0 \ \mathrm{Cos}\mu_1\phi_0 - A_1 \ \mathrm{Sinh}\chi_1\phi_0 \ \mathrm{Sin}\mu_1\phi_0 - B_2 \ \mathrm{Cosh}\chi_2\phi_0 \ \mathrm{Cos}\mu_2\phi_0 + A_2 \ \mathrm{Sinh}\chi_2\phi_0 \ \mathrm{Sin}\mu_2\phi_0 \Big] \mathrm{Sin}\ \frac{n\pi x}{L}$$

$$\upsilon_1 = \frac{45.6^3 \times \frac{1}{12}}{.0228 \times 111\ Et} .925 \Big[(-.414A_1 + B_1)\ 3.26 + (-A_1 - .414B_1)\ 7.65 + (A_2 - .414B_2)(-1.365) + (.414A_2 + B_2).57 \Big] \mathrm{Sin}\ \frac{\pi x}{L}$$

$$\omega_1 = \frac{-45.6^3 \times \frac{1}{12}}{\sqrt{2} \times .0228 \times 4.81\ Et} \Big[(-A_1 + B_1)\ 3.3 + (-A_1 - B_1)\ 7.58 + (A_2 + B_2)(-1.66) + (-A_2 + B_2).469 \Big] \mathrm{Sin}\ \frac{\pi x}{L}$$

$$N_{x1} = \frac{536}{1.77} \Big[3.3B_1 - 7.58A_1 + 1.66B_2 + .469A_2 \Big] \mathrm{Sin}\ \frac{\pi x}{L}$$

$$\sigma_{x1} = \frac{N_{x1}}{t} \quad lb/ft/ft \qquad \left[lb/ft^2\right] \qquad t = \frac{1}{24}\ ft$$

A's $\left[lb/ft\right]$

$$Et\nu_1 = 2890\ (-9.0A_1 + .10B_1 - 1.13A_2 + 1.134B_2) \quad \left[lb\right]$$

$$Et\omega_1 = -51000\ (-10.88A_1 - 4.28B_1 - 2.129A_2 - 1.191B_2) \quad \left[lb\right]$$

$$\sigma_{x1} = 7280\ (-7.58A_1 + 3.3B_1 + .469A_2 + 1.66B_2) \quad \left[lb/ft^2\right]$$

Then, the displacements and the longitudinal stress for unit edge loads are as follows:

$\underline{\bar{N}_{\phi 1} = 1\ lb/ft}$

$$Et\nu_1 = 2890\ \left[-9.0\ (-.01268) + .10(-.00461) - 1.13\ (-.0446) + 1.134\ (.0052)\right]$$

$$= 2890\ \left[+.1143 - .00046 + .0504 + .0059\right] = 491\ lb$$

$$[.17014]$$

$$Et\omega_1 = -51000\left[-10.88(-.01268) - 4.28\ (-.00461) - 2.129\ (-.0446) - 1.191\ (.0052)\right]$$

$$= -51000(+.1385 + .01972 + .095 - .0062) = -12600\ lb$$

$$[.247]$$

$$\sigma_{x1} = 7280\ \left[-7.58\ (-.01268) + 3.3\ (-.00461) + .469\ (-.0446) + 1.66\ (.0052)\right]$$

$$= 7280\ (+.096 - .0152 - .0209 + .0086) = 497\ lb/ft^2$$

$$[.0685]$$

$\underline{Et\nu_1 = 491\ lb}$ $\qquad$ $\underline{Et\omega_1 = -12{,}600\ lb}$ $\qquad$ $\underline{\sigma_{x1} = 497\ lb/ft^2}$

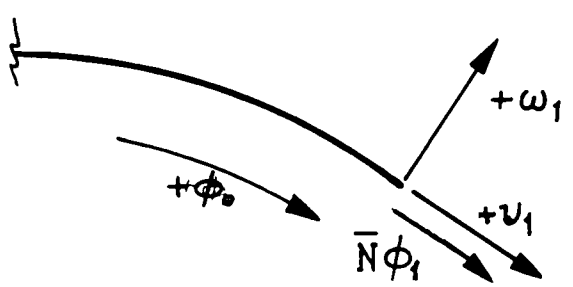

$\underline{\bar{Q}_{\phi_1} = 1 \text{ lb/ft}}$

$$Et\nu_1 = 2890 \left[-9.0\ (-.0662) + .10\ (-.0202) -1.13\ (-.2552) + 1.134\ (-.1165)\right]$$

$$= 2890\ (+\ .596 - .00202 + .289 - .132) = 2170 \text{ lb}$$

$$[.751]$$

$$Et\omega_1 = -51000 \left[-10.88\ (-.0662) - 4.28\ (-.0202) -2.129\ (-.2552) - 1.191\ (-.1165)\right]$$

$$= -51000\ (+\ .721 + .0865 + .544 + .1385) = -76000 \text{ lb}$$

$$[1.49]$$

$$\sigma_{x1} = 7280 \left[-7.58\ (-.0662) + 3.3\ (-.0202) + .469\ (-.2552) + 1.66\ (-.1165)\right]$$

$$= 7280\ (+\ .501 - .0669 - .1194 - .1935) = 880 \text{ lb/ft}^2$$

$$[.1212]$$

$\underline{Et\nu_1 = 2170 \text{ lb}}$ $\underline{Et\omega_1 = -76000 \text{ lb}}$ $\underline{\sigma_{x1} = 880 \text{ lb/ft}^2}$

$\underline{\bar{N}_{x\phi_1} = 1 \text{ lb/ft}}$

$$Et\nu_1 = 2890 \left[-9.0\ (.00241) + .10\ (-.000165) -1.13\ (.00288) + 1.134\ (-.00405)\right]$$

$$= 2890\ (-.02165 - .000016 - .00325 - .00459) = -85 \text{ lb}$$

$$[-.02941]$$

$$Et\omega_1 = -51000 \left[-10.88\ (.00241) - 4.28\ (-.00165) -2.129\ (.00288) - 1.191\ (-.00405)\right]$$

$$= -51000\ (-.0262 + .00708 - .00613 + .00482) = 1040 \text{ lb}$$

$$[-.0204]$$

$$\sigma_{x1} = 7280 \left[-7.58\ (.00241) + 3.3\ (-.000165) + .469\ (.00288) + 1.66\ (-.00405)\right]$$

$$= 7280\ (-.0182 - .000545 + .00135 - .00672) = -175 \text{ lb/ft}^2$$

$$[-.0241]$$

$\underline{Et\nu_1 = -85 \text{ lb}}$ $\underline{Et\omega_1 = 1040 \text{ lb}}$ $\underline{\sigma_{x1} = -175 \text{ lb/ft}^2}$

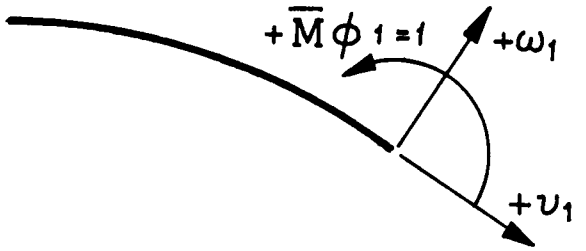

$\bar{M}_{\phi_1} = 1$ lb-ft/ft

$$Et\upsilon_1 = 2890\left[-9(.0574) + .0324 - 1.13 \times .1364 + 1.134 \times .1257\right]$$
$$= 2890\ (-.4956) = \underline{-1430\ \text{lb}}$$

$$Et\omega_1 = +\ 51000\left[10.88(.0574) + 4.28(.0324) + 2.129(.1365) + 1.191(.1257)\right]$$
$$= +\ 51000(1.103) = \underline{+\ 56100\ \text{lb}}$$

c. Rotation of the normal or of the tangent for unit edge loads $(\dot{\omega}_1/a)$

$$\dot{\omega}_n/a = \frac{a^2}{K\zeta\sqrt{n}}\ \rho\left[(A_1 - .414B_1)\ \text{Sinh}\chi_1\phi_0\ \text{Cos}\mu_1\phi_0 + (414A_1 + B_1)\ \text{Cosh}\chi_1\phi_0\ \text{Sin}\mu_1\phi_0 + (.414A_2 - B_2)\ \text{Sinh}\chi_2\phi_0\ \text{Cos}\mu_2\phi_0 + (A_2 + .414B_2)\ \text{Cos}\chi_2\phi_0\ \text{Sin}\mu_2\phi_0\right]\text{Sin}\ \frac{n\pi}{L}x$$

$\theta = \dot{\omega}_1/a/\text{ft}$

$+\theta$

$$\dot{\omega}_1/a = \frac{45.6^2 \times 1/12}{.0228 \times 4.81}\ \frac{.925}{Et}\left[(A_1 - .414B_1)\ 3.26 + (.414A_1 + B_1)\ 7.65 + (.414\ A_2 - B_2)(-1.365) + (A_2 + .414B_2).57\right]\ \text{Sin}\ \frac{\pi}{L}x$$

$$\dot{\omega}_1/a = \frac{1460}{Et}\ (6.42A_1 + 6.3B_1 - .006A_2 + 1.601B_2)\ \text{Sin}\ \frac{\pi}{L}x \quad [0]$$

$\underline{\bar{N}_{\phi_1} = 1 \text{ lb/ft}}$

$$\dot{\omega}_1/a = \frac{1460}{Et}(-.088 - .029 + .000268 + .0083) = \frac{-158}{Et}$$
$$[-.10843]$$

$\underline{\bar{Q}_{\phi_1} = 1 \text{ lb/ft}}$

$$\dot{\omega}_1/a = \frac{1460}{Et}(-.425 - .1272 + .0015 - .1868) = \frac{-1074}{Et}$$
$$[-.7375]$$

$\underline{N_{x\phi_1} = 1 \text{ lb/ft}}$

$$\dot{\omega}_1/a = \frac{1460}{Et}(+ .0155 - .00104 - .000017 - .0065) = \frac{+11.65}{Et}$$
$$[+.008]$$

$\underline{\bar{M}_{\phi_1} = 1 \text{ lb-ft/ft}}$

$$\dot{\omega}_1/a = \frac{1460}{Et}(+ .37 + .204 - .00082 + .201) = \frac{+1130}{Et}$$
$$[+.774]$$

7. <u>Shell supporting surface load, with free edges</u>

a. <u>Shell</u>

$$N_{\phi n} = (p_{rn}) \times r = -\frac{4}{\pi} pa \qquad n = 1$$

$$Et\omega_1 = aN_{\phi n} = -\frac{4}{\pi} pa^2 = -\frac{4}{\pi} 1760 \times \frac{45.6^2}{144} = -32400 \text{ lb}$$

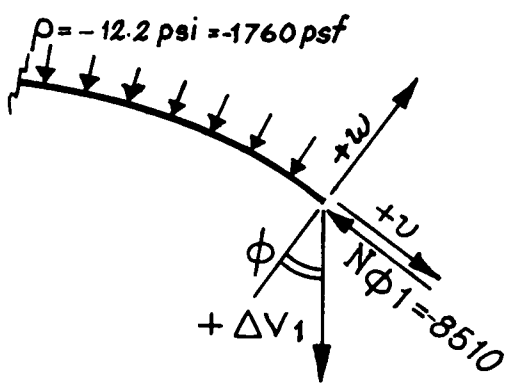

$Et\upsilon_1 = 0$

$\Delta V_1 Et = Et\,(\upsilon_1 \sin\phi_0 - \omega_1 \cos\phi_0) = 0 - (-32400) \times .80686$

$= +\ 26100$ lb

$D_{10}^{S} = \Delta V_1 Et = +\ 26100$ lb $\quad \downarrow +$

b. <u>Edge Beam</u>

Load: $p_2 + V_L = 25.6 + 5040 = 5065.6$ lb/ft

$\Delta V^B = -\frac{4}{\pi}(5065.6)\ \frac{L^4}{EI} \times \frac{1}{\pi^4}$ $\qquad p_2$ = weight of beam

$= -\frac{4}{\pi}(5065.6)\ \frac{108}{12}\ \frac{108^3}{E \times 32\pi^4} = -\ 5{,}840{,}000\ \frac{1}{E}$ [in]

use $t = 1/2"$

$D_{10}^{B} = Et\Delta V^B = -\ 11{,}680{,}000$ (lb)

$D_{10}^{S} + D_{10}^{B} = +\ 26{,}100 - 11{,}680{,}000 = -11{,}653{,}900$ lb at $x = \frac{L}{2}$

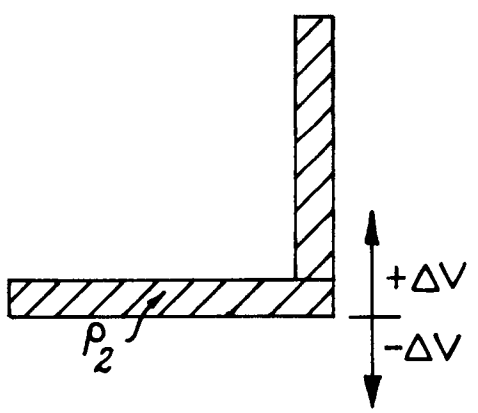

$$\Delta V_1^{'S} Et = Et\,(\upsilon_1 \operatorname{Sin}\phi_0 - \omega_1 \operatorname{Cos}\phi_0) \qquad +\downarrow$$

$$= \left[491 \times .59075 - (-12600)\ .80686\right]\bar{N}_{\phi 1}$$

$$+ \left[2170 \times .59075 - (-76000)\ .80686\right]\bar{Q}_{\phi 1}$$

$$+ \left[-85 \times .59075 - (1040)\ .80686\right]\bar{N}_{x\phi 1}$$

$$= \underset{D_{11}^{S}}{10{,}460}\ \bar{N}_{\phi 1} + \underset{D_{12}^{S}}{62{,}630}\ \bar{Q}_{\phi 1} - \underset{D_{13}^{S}}{930}\ \bar{N}_{x\phi 1}$$

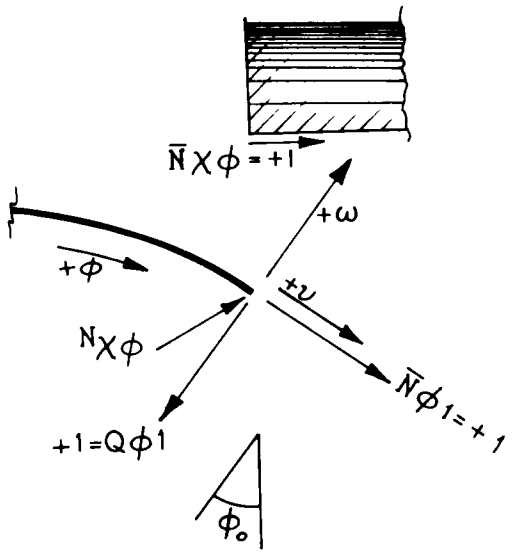

$$\Delta V^{'B} = (+\ \bar{O}_{\phi 1} \operatorname{Cos}\phi_1 + \bar{N}_{\phi 1} \operatorname{Sin}\phi_0)\ \frac{L^4}{EI} \times \frac{1}{\pi^4}$$

$$-\left[\frac{1}{EI}\ \frac{L^3}{\pi^3}\right](-\bar{N}_{x\phi 1})(-e) \qquad \text{At } x = \frac{L}{2}$$

$$= (\bar{Q}_{\phi 1} \times .80686 + \bar{N}_{\phi 1} \times .59075)\ \frac{108}{12}\ \frac{108^3}{E \times 32}$$

$$- \left(\frac{1}{E \times 32} \times \frac{108^2}{\pi^3} \times \frac{108}{12}\right)\ 1.345\ \bar{N}_{x\phi 1}$$

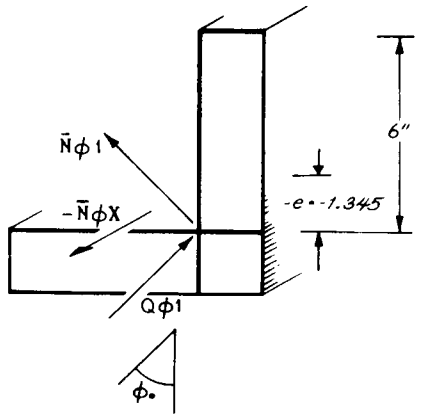

$$\Delta V' \; Et = \underset{D_{11}^{B}}{1075\,\bar{N}_{\phi 1}} + \underset{D_{12}^{B}}{1466\,\bar{Q}_{\phi 1}} - \underset{D_{13}^{B}}{71\,\bar{N}_{x\phi 1}} \qquad + \uparrow$$

$$(D_{10}^{S} + D_{10}^{B}) + (D_{11}^{S} + D_{11}^{B}) + (D_{12}^{S} + D_{12}^{B}) + (D_{13}^{S} + D_{13}^{B}) = 0$$

$$10{,}460\,\bar{N}_{\phi 1} + 62{,}630\,\bar{Q}_{\phi 1} - 930\,\bar{N}_{x\phi 1} + 1075\,\bar{N}_{\phi 1} + 1466\,\bar{Q}_{\phi 1} - 71\,\bar{N}_{x\phi 1} - 11{,}653{,}900 = 0$$

$$11{,}535\,\bar{N}_{\phi 1} + 64{,}096\,\bar{Q}_{\phi 1} - 1001\,\bar{N}_{x\phi 1} - 11{,}653{,}900 = 0 \qquad (1)$$

$$\sigma_{\substack{x1\\1,2,3}}^{S} = +\,497\,\bar{N}_{\phi 1} + 880\,\bar{Q}_{\phi 1} - 175\,\bar{N}_{x\phi 1} \qquad \text{lb/ft}^2$$

$$\sigma_{\substack{x1\\0}}^{S} = \frac{N_x}{t} = 0$$

$$\sigma_{\substack{x1\\0}}^{B} = -\frac{4}{\pi}\,(p_2 + V_L)\,\frac{L^2}{\pi^2}\;\frac{1.345}{32}$$

$$= -\frac{4}{\pi}\,5065.5\,\frac{108^2}{\pi^2} \times \frac{1.345}{32 \times 1/12} = -\,3{,}830{,}000 \text{ lb/ft}^2$$

$$\sigma_{\substack{x1\\1,2}}^{B} = (\bar{N}_{\phi 1}\,\text{Sin}\phi_0 + \bar{Q}_{\phi 1}\,\text{Cos}\phi_0)\,\frac{L^2}{\pi^2}\;\frac{1.345}{32 \times 1/12}$$

$$= 352\,\bar{N}_{\phi 1} + 480\,\bar{Q}_{\phi 1} \qquad \text{lb/ft}^2$$

$$\sigma_{x_3^1}^{B} = -\frac{N_{x\phi_1}}{\pi} L \left(\frac{1}{A} + \frac{e'^2}{I} \right) \qquad [e'] = 1.345''$$

$$= \frac{-108}{\pi} \left(\frac{1}{7.5 \times 1/12} + \frac{1.345}{1/12 \times 32} \right) N_{x\phi_1} = -72\ N_{x\phi_1}\ \text{lb/ft}^2$$

$$(497\bar{N}_{\phi_1} + 880\bar{Q}_{\phi_1} - 175\bar{N}_{x\phi_1}) + (352\bar{N}_{\phi_1} + 480\bar{Q}_{\phi_1} - 72N_{x\phi_1}) - 3{,}830{,}000 = 0$$

$$849\bar{N}_{\phi_1} + 1360\bar{Q}_{\phi_1} - 247\bar{N}_{x\phi_1} - 3{,}830{,}000 = 0 \qquad (2)$$

$$\bar{N}_{\phi_1} \cos\phi_0 - \bar{Q}_{\phi_1} \sin\phi_0 - 8510 \cos\phi_0 = 0$$

$$\bar{N}_{\phi_1} - .735\ \bar{Q}_{\phi_1} - 8510 = 0 \qquad (3)$$

c. <u>Compatability Equations</u>

$$\begin{cases} 849\ \bar{N}_{\phi_1} + 1360\ \bar{Q}_{\phi_1} - 247\ \bar{N}_{x\phi_1} - 3{,}830{,}000 = 0 & (2) \\ \bar{N}_{\phi_1} - .735\ \bar{Q}_{\phi_1} - 8510 = 0 & (3) \\ 11{,}535\ \bar{N}_{\phi_1} + 64{,}096\ \bar{Q}_{\phi_1} - 1001\ \bar{N}_{x\phi_1} - 11.653{,}900 = 0 & (1) \end{cases}$$

from (3): $\bar{N}_{\phi_1} = .735\ \bar{Q}_{\phi_1} + 8510$ Substitute in (1) & (2)

$$623\ \bar{Q}_{\phi_1} + 7{,}220{,}000 + 1360\ \bar{Q}_{\phi_1} - 247\ \bar{N}_{x\phi_1} - 3{,}830{,}000 = 0$$

$$1983\ \bar{Q}_{\phi_1} - 247\ \bar{N}_{x\phi_1} + 3{,}390{,}000 = 0 \qquad (2)$$

$$8500\ \bar{Q}_{\phi_1} + 98{,}200{,}000 - 1001\ \bar{N}_{x\phi_1} - 11{,}653{,}900 + 64{,}096\ \bar{Q}_{\phi_1} = 0$$

$$72{,}596\ \bar{Q}_{\phi_1} - 1001\ \bar{N}_{x\phi_1} + 86{,}546{,}100 = 0 \qquad (3)$$

$$\bar{N}_{x\phi 1} = 72.4\ \bar{Q}_{\phi 1} + 86{,}500 \qquad (3)$$

$$1983\ \bar{Q}_{\phi 1} - 17920\ \bar{Q}_{\phi 1} - 21{,}400{,}000 + 3{,}390{,}000 = 0 \qquad (2)$$

$$\bar{Q}_{\phi 1} = \frac{-18{,}010{,}000}{15{,}937} = -1132 \text{ lb/ft}$$

$$\bar{N}_{\phi 1} = 8510 - 830 = +\ 7680 \text{ lb/ft}$$

$$\bar{N}_{x\phi 1} = 86500 - 82000 = +\ 4500 \text{ lb/ft}$$

d. Calculation of A's

By having the value for $\bar{N}_{\phi 1}$, $\bar{Q}_{\phi 1}$, $\bar{N}_{x\phi 1}$, we compute A's

$$A_1 = -.01268\ (7680) + (-.0662)(-1132) + (.00241)\ 4500$$
$$= -97.2 + 74.9 + 10.8 = \underline{-11.5} \text{ lb/ft}$$

$$B_1 = -.00461\ (7680) + (-.0202)(-1132) + (-.0001653)\ 4500$$
$$= -35.4 + 22.9 - .74 = \underline{-13.24} \text{ lb/ft}$$

$$A_2 = -.0446\ (7680) + (-.2552)(-1132) + (.002885)\ 4500$$
$$= -342 + 290 + 13 = \underline{-39} \text{ lb/ft}$$

$$B_2 = +\ .0052\ (7680) + (-.1165)(-1132) + (-.00405)\ 4500$$
$$= 40 + 132 - 18.2 = \underline{+\ 154} \text{ lb/ft}$$

Using A's values in the equations $N_{\phi 1}$, $Q_{\phi 1}$, $N_{x\phi 1}$, N_{x1}, $M_{\phi 1}$ (pages C-43 and C-49) gives final values for those equations.

In the foregoing analysis the simple end condition of the shell without edge beam has been considered. But the membrane force must be added to the above force (simple shell) (Flügge Method).

8. Simply Supported Simple Shell Without Edge Beam

Edge Condition:

$$M_\phi = 0 \qquad (1)$$

$$N_\phi = 0 = N'_\phi + T_L \qquad (2)$$

$$Q_{\bar{\phi}} = Q_\phi + \frac{\partial M_{\phi x}}{\partial x} = 0 \qquad (3)$$

$$N_{\phi x} = 0 = N'_{x\phi} + S_L \qquad (4)$$

$$3.3\ A_1 + 7.58\ B_1 - 1.66\ A_2 + .469\ B_2 = 0 \qquad (1)$$

$$-16.4 \left[-4.28\ A_1 + 10.88\ B_1 + 1.191\ A_2 - 2.129\ B_2 \right] \underbrace{-8510}_{-N'_\phi} = 0 \qquad (2)$$

$$.102\ A_1 + 8.998\ B_1 - 1.134\ A_2 - 1.13\ B_2 = 0 \qquad (3)$$

omit $\frac{\partial M_{\phi x}}{\partial x}$

$$\left[-6.302\ A_1 + 6.418\ B_1 + 1.13\ A_2 - .006\ B_2 \right] = 0 \qquad (4)$$

in which $N'_{x\phi} = 0$

For $N_{\phi_1} = +1$, all A's in page

then for $N_{\phi_1} = +8510$:

$A_1 = -108$ lb/ft $\qquad A_2 = -380$ lb/ft

$B_1 = -39.4$ lb/ft $\qquad B_2 = +44.4$ lb/ft

$$N_\phi = -16.4 \Big[(-147.5)\ \mathrm{Cosh}\chi_1\phi\ \mathrm{Cos}\mu_1\phi + (68.6)\ \mathrm{Sinh}\chi_1\phi\ \mathrm{Sin}\mu_1\phi$$
$$+(424.4)\ \mathrm{Cosh}\chi_2\phi\ \mathrm{Cos}\mu_2\phi$$
$$+(335.6)\ \mathrm{Sinh}\chi_2\phi\ \mathrm{Sin}\mu_2\phi\Big]\mathrm{Sin}\frac{\pi x}{L} - \underset{N'_\phi}{8510}\ \mathrm{Sin}\frac{\pi x}{L}$$

or: (membrane theory)

In case of $P_z = P_r$; $P_\phi = P_x = 0$, N'_ϕ is constant for all ϕ

and $N'_x = N'_{x\phi} = 0$

$$N_\phi = -16.4\ (+8510)\ \Big[(-.01729)\ \mathrm{Cosh}\chi_1\phi\ \mathrm{Cos}\mu_1\phi$$
$$+\ (.00807)\ \mathrm{Sinh}\chi_1\phi\ \mathrm{Sin}\mu_1\phi + (.0498)\ \mathrm{Cosh}\chi_2\phi\ \mathrm{Cos}\mu_2\phi$$
$$+(.0394)\ \mathrm{Sinh}\chi_2\phi\ \mathrm{Sin}\mu_2\phi\Big]\mathrm{Sin}\frac{\pi x}{L} - 8510\ \mathrm{Sin}\frac{\pi x}{L}$$

for $\phi = 0$ (crown) and $x = \frac{L}{2}$

$$N_\phi = 16.4\ (+.03251)(+8510) - 8510 = -4540 - 8510$$
$$= \underline{-13050\ \mathrm{lb/ft}}$$

9. <u>Final Value of $N_{\phi 1}$, $Q_{\phi 1}$, $N_{x\phi 1}$, N_{x1}, $M_{\phi 1}$ due to edge force:</u>

$$M_{\phi 1} = \frac{45.6}{12}\ (-11.5\ \mathrm{Cosh}\chi_1\phi\ \mathrm{Cos}\mu_1\phi - 13.24\ \mathrm{Sinh}\chi_1\phi\ \mathrm{Sin}\mu_1\phi$$
$$-39\ \mathrm{Cosh}\chi_2\phi\ \mathrm{Cos}\mu_2\phi + 154\ \mathrm{Sinh}\chi_2\phi\ \mathrm{Sin}\mu_2\phi)\ \mathrm{Sin}\ \frac{\pi}{L}\ x$$

$$Q_{\phi 1} = 4.45\ (-17\ \mathrm{Sinh}\chi_1\phi\ \mathrm{Cos}\mu_1\phi - 8.5\ \mathrm{Cosh}\chi_1\phi\ \mathrm{Sin}\mu_1\phi$$
$$+138\ \mathrm{Sinh}\chi_2\phi\ \mathrm{Cos}\mu_2\phi$$
$$+102.7\ \mathrm{Cosh}\chi_2\phi\ \mathrm{Sin}\mu_2\phi)\ \mathrm{Sin}\ \frac{\pi}{L}\ x$$

$$N_{\phi 1} = -16.4\ (-24.75\ \mathrm{Cosh}\chi_1\phi\ \mathrm{Cos}\mu_1\phi - 1.75\ \mathrm{Sinh}\chi_1\phi\ \mathrm{Sin}\mu_1\phi$$
$$+193\ \mathrm{Cosh}\chi_2\phi\ \mathrm{Cos}\mu_2\phi$$
$$-115\ \mathrm{Sinh}\chi_2\phi\ \mathrm{Sin}\mu_2\phi)\ \mathrm{Sin}\ \frac{\pi}{L}\ x$$

$$N_{x\phi_1} = -77(-18\ \mathrm{Sinh}\chi_1\phi\ \mathrm{Cos}\mu_1\phi + \mathrm{Cosh}\chi_1\phi\ \mathrm{Sin}\mu_1\phi$$
$$-24.7\ \mathrm{Sinh}\chi_2\phi\ \mathrm{Cos}\mu_2\phi$$
$$-170\ \mathrm{Cosh}\chi_2\phi\ \mathrm{Sin}\mu_2\phi)\ \mathrm{Cos}\frac{\pi}{L}x$$

$$N_{x_1} = 303(-13.24\ \mathrm{Cosh}\chi_1\phi\ \mathrm{Cos}\mu_1\phi + 11.5\ \mathrm{Sinh}\chi_1\phi\ \mathrm{Sin}\mu_1\phi$$
$$-154\ \mathrm{Cosh}\chi_2\phi\ \mathrm{Cos}\mu_2\phi$$
$$-39\ \mathrm{Sinh}\chi_2\phi\ \mathrm{Sin}\mu_2\phi)\ \mathrm{Sin}\frac{\pi}{L}x$$

Membrane force:

$$N'_\phi = -8510 \qquad N'_x = N'_{x\phi} = Q'_\phi = M'_\phi = 0 \qquad (\text{for all } \phi\ )$$

10. Final Stresses in Shell

a. At edge:

$M_\phi = 3.80(-38 -100 +65 +64) = -26$ lb-ft/ft $\cong 0$

$N_\phi = -16.4(+49.2 -144 - 46.5 - 327)$

$= + 7690 -8510 = -820$ lb/ft

$Q_\phi = 4.45(-1.17 -118.5 +44.3 -174) = - 1110$ lb/ft

$N_x = 303(+87 -43.6 -18.2 +256) = + 85200$ lb/ft

b. At crown:

$M_\phi = 3.80(-11.5 -39) = - 192$ lb-ft/ft

$N_\phi = -16.4(-24.75 +193) - 8510 = -2760 -8510 = - 11270$ lb/ft

$Q_\phi = 4.45(0) = 0$

$N_x = 303(-13.24 - 154) = - 51,000$

The analysis shows that for values of

ϕ =	18^0	20^0	23^0	25^0	27^0	30^0
M_ϕ =	+186	+280	+308	+328	+332 lb-ft/ft	+280

$\phi = 27^0 = .47$ rad.

$\chi_{1\phi} = 2.1 \quad \mu_{1\phi} = 49.6^0$

$\chi_{2\phi} = .87 \quad \mu_{2\phi} = 120^0$

$4.144 \times .688 = 2.67$

$4.02 \times .761 = 3.06$

$1.4 \times (-.5) = -.7$

$.98 \times .866 = .85$

$M_\phi = 3.80(-30.5 -40.5 + 27.4 + 131) = + 332$ lb-ft/ft

11. Diagram of Resultant

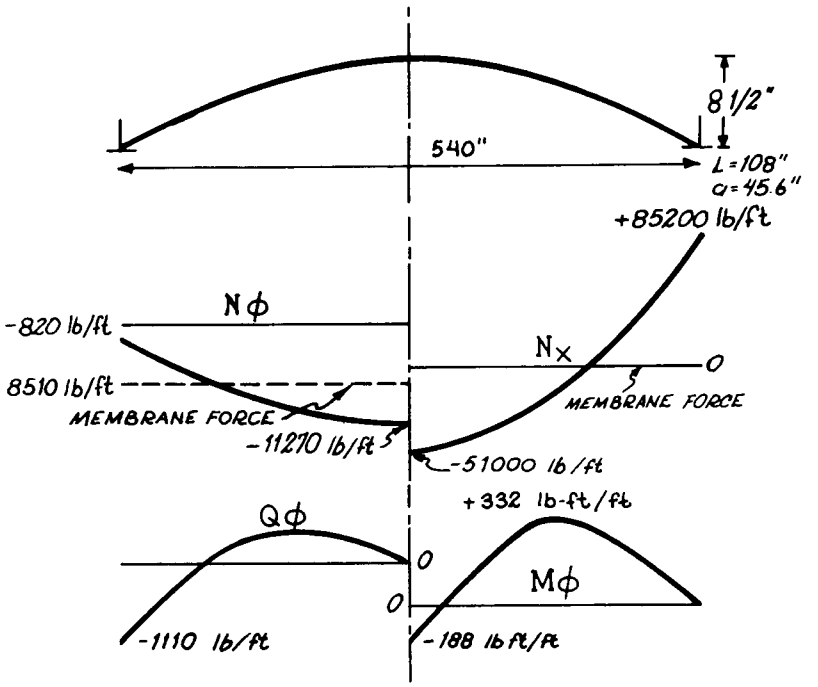

$N_{x\ max} = +\ 85200$ lb/ft

$N_{\phi\ max} = -\ 11270$ lb/ft

$M_{\phi\ max} = +\ 332$ lb-ft/ft

$Q_{\phi\ max} = -\ 1110$ lb/ft

$$\sigma_x = \frac{85200}{1/2 \times 12} = \underline{14200 \text{ psi}}$$

$$\sigma_\phi = \frac{-11270}{1/2 \times 12} = \underline{1880 \text{ psi}}$$

$$\sigma_M = \frac{12 \times 332}{\frac{12'' \times 1/4}{6}} = \underline{7950 \text{ psi}}$$

$$\sigma_Q = \frac{-1110}{1/2 \times 12} = \underline{1850 \text{ psi}}$$

C. 2. 2. 2 Concrete Stages

The vertical and lateral loads of a frame structure extended between two expansion joints have been calculated and are shown in Figure C-5.

The effect of temperature, as described in Section C. 2. 2. 1, Steel Stages, is not serious for the frames, since the floor slab is allowed to expand and the temperature range in the concrete section is lower than that in the steel section.

In this section the dead load and live load and exterior pressure and seismic force have been considered. The stress in the critical column, concrete beams and concrete slabs will be checked and required reinforcing will be determined.

A. Critical Concrete Columns

Column (a-9)

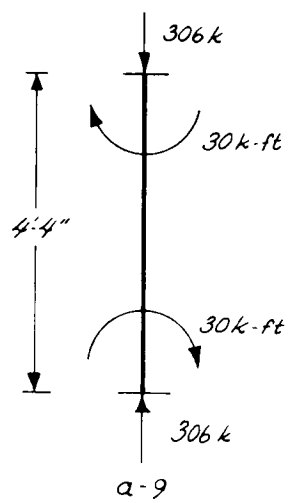

Column section 16 in x 16 in

Dead load: P_1 = 20,600 + 39,700 + 1350 +4970 + 7880 = 74,500 lb

Live load: P_2 = 10.5 x 10.5 x 20 = 2,200 lb

Exterior pressure acting on column from the roof:

P = 10.5 x 10.5 x 144 x 14 = 220,000 lb

Vertical load due to seismic load = 9500 lb

Total vertical load = 74.5 + 2.2 + 220 + 9.5 = 306 kips

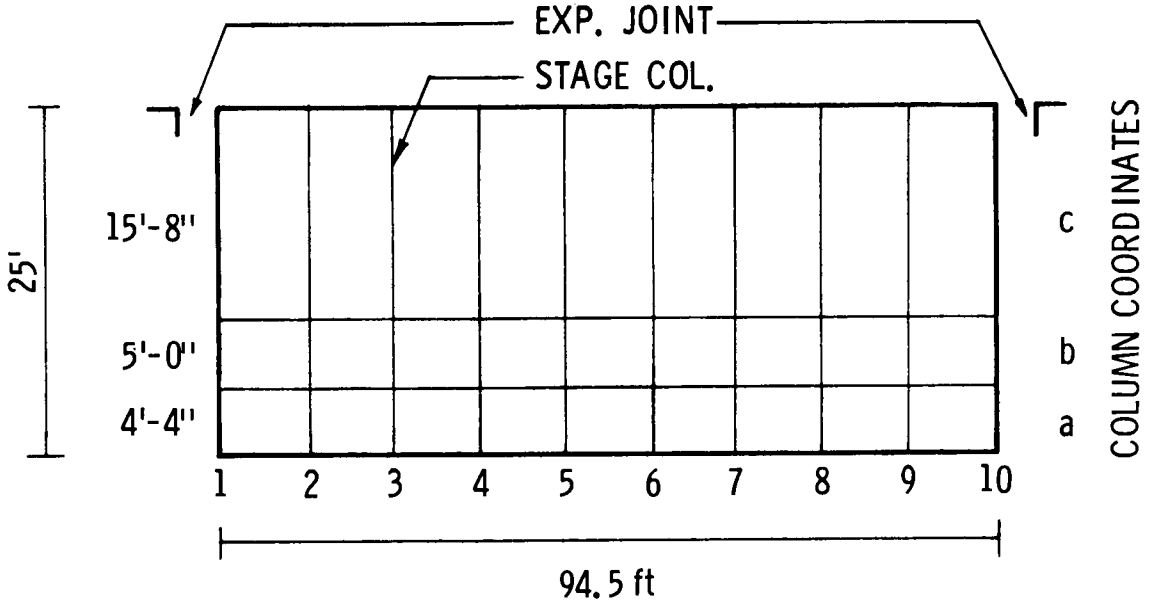

SEISMIC FORCE = .2g

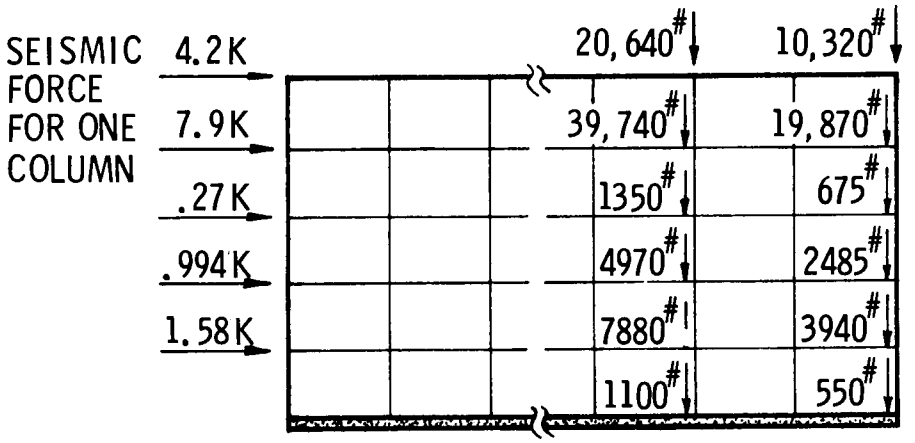

Figure C-5. Load Summary - Concrete Stage

$M_{total} = M_{seismic} = 30$ kips-ft

Safety factor = 3.5

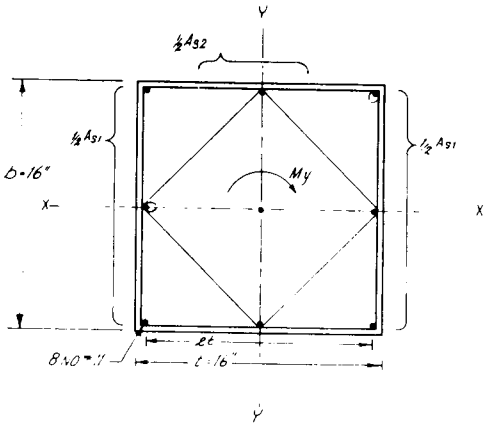

The following calculation was based on the ACI Handbook:

1. $\dfrac{N}{f'_c A_g} = \dfrac{306}{3 \times 16 \times 16} = .4$

From Table 26 with $g_y = .8$

$f_s = 16$ ksi

$P_b/f'_c A_g = .22$ maximum $< .4$

Thus compression controls:

$M_y = 30^{K'}$

$N = 306^{K}$

2. $e/t = \dfrac{12\,M_y}{Nt} = \dfrac{12 \times 30}{306 \times 16} = .074$ $\qquad e = M/P$

From Table 26 for $g_y = .8$ $\qquad e_a/t = .13-.11$

Then: $e < e_a$

Axial Load, N $= 306^{K}$

Load carried by concrete $= 136^{K}$

Load carried by reinforcement $= 172^{K}$

From Table 24, use 8 No. 11 bars

3. Check for region I with reinforcement on four faces.

$A_{st} = 8 \times 1.56 = 12.48$ $\qquad P_g = \dfrac{12.48}{256} = .0487$

$A_s = 2 \times 3 \times 1.56 = 9.36$ $\qquad P_1 = \frac{9.36}{256} = .0365$

$A_{s2} = 2 \times 1 \times 1.56 = 3.12$ $\qquad P_2 = \frac{3.12}{256} = .0122$

$P''_y = P_1 + .25\ P_2 = .0365 + .25 \times .0122 = .0365 + .00305 = .04155$

From Table 32: for $P_g = .0487$: $S'_y = .438$

for $P''_y = .04155$: $S''_y = .3974$

From Table 26: for $g_y = .8$ and $P_g = .0487$: $\frac{ea}{t} = .13$

Corrected $\frac{e_{a2}}{t} = \frac{e_a}{t} \times \frac{S''_y}{S'_y} = .13 \times \frac{.3974}{.438} = .118$

Then: $\frac{e_{a2}}{t} > \frac{e_t}{t}$ $\qquad \therefore$ design is adequate.

Solution by Diagram:

$$N' = \frac{N}{f'cAg} = \frac{306}{3 \times 16 \times 16} = .4$$

$$M'_y = \frac{12\ M_y}{f'c + Ag} = \frac{12 \times 30}{4 \times 16 \times 256} = .022$$

From Diagram 35d

$P_g \cong .045$

assuming 8 No. 11; $P_g = .0487$

<u>Column (c-2)</u>

Column section 16 in x 16 in

Dead load: $P_1 = 20,600 + 39,700 + 4970 = 66,620$ lb

Live load: $P_2 = 10.5 \times 10.5 \times 20 = 2200$ lb

Exterior pressure acting on column from the roof:

$$P_2 = 10.5 \times 10.5 \times 144 \times 4.85 = 67,000 \text{ lb}$$

Vertical load due to seismic load = 9500 lb

Total vertical load = 66.6 + 2.2 + 67 + 9.5 = 145.3 kips

$M_{total} = M_{seismic} = 40$ kips-ft

Safety factor = 3.5

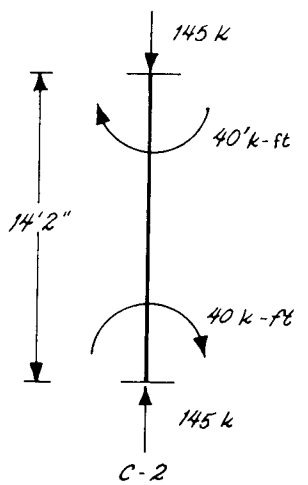

$\ell = 14'-2''$

$r_1 = .29t = .29 \times 16 = 4.65''$

$r_2 = .29 \times 17 = 4.94''$

$r_3 = .29 \times 24 = 7''$

$$\frac{h}{r_1} = \frac{14'-2''}{4.65} = \frac{170}{4.65} = 36.5$$

$$\frac{h}{r_2} = \frac{170}{4.94} = 34.5$$

$$\frac{h}{r_3} = \frac{170}{7} = 24.3$$

$$R_1 = 1.07 - 0.008\frac{h}{r} = 1.07 - \frac{.006}{.008} \times 36.5 = .778 - .85$$

$$R_2 = 1.07 - \underline{.008} \times 34.5 = .794$$

$$R_3 = 1.07 - \underline{.008} \times 24.3 = .876$$

$$\left.\begin{array}{l} P = 145/.778 = 186^K \\ M = 40/.778 = 51.5^K \end{array}\right\} \quad \text{for } 16'' \times 16''$$

1. $\dfrac{N}{f'cAg} = \dfrac{145}{3 \times 16 \times 16} = 19$

From Table 26: $g_y = .8$,

$f_s = 20$ psi

$\dfrac{Pb}{f'cAg} = .17 \text{ max} < .19$

Thus compression controls:

$M_y = 51.5^{K'}$

$P = 186^K$

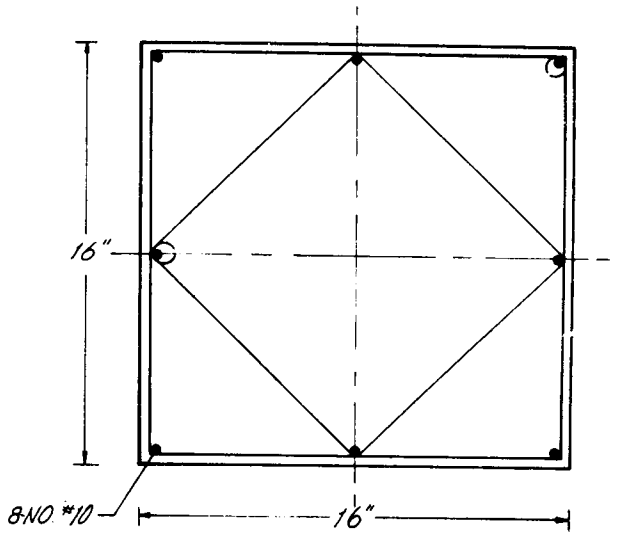

2. $e/t = \dfrac{12M_y}{Nt} = \dfrac{12 \times 51.5}{145 \times 16} = .265$

From Table 26: $e_a/b = .13\text{-}.11$

Then $e > e_a$

Initial trial: Assume $Pg = .048$

From Table 26: $CD = 3.3$

From Table 23: $G = .718$

Compute P_a

$$P_a = G\left[N + CD\left(\frac{12M_y}{t}\right)\right] = .718\left(145 + 3.3\,\frac{12 \times 51.5}{16}\right) = 194^K$$

Axial load: 194^K

Load carried by concrete: $\dfrac{136}{58^K}$

From Table 24, 8 bar No. 7 is needed, but because reinforcement is arranged on four faces and column lies in Region II, a greater number of bars will be required. Then for second trial, use 8 bar No. 10.

$A_{st} = 8 \times 1.27 = 10.16$ $\qquad P_y = \frac{10.16}{256} = .04$

$A_{s1} = 2 \times 3 \times 1.27 = 7.62$ $\qquad P_1 = \frac{7.62}{256} = .0297$

$A_{s2} = 2 \times 1 \times 1.27 = 2.54$ $\qquad P_2 = \frac{2.54}{256} = .0099$

$$P''_y = P_1 + .25P_2 = .0297 + .25 \times .0099 = .0326$$

From Table 32: for $P_y = .04$ $\qquad S'_y = .389$

for $P''_y = .0326$ $\qquad S''_y = .348$

Table 26 for $g_y = .8$, $P_y = .04$: $CD_y = 3.2$

and from Table 23 $\quad G = .71$

Then: $P_a = G\left[N + CD_y\left(\frac{S'_y}{S''_y}\right)\left(\frac{12M_y}{t}\right)\right]$

$$= .71\left[145 + 3.2\left(\frac{.389}{.348}\right)\left(\frac{12 \times 51.5}{16}\right)\right] = 200^K$$

Axial P_a $\qquad = 200$

Load carried by concrete $= \underline{136}$

$\qquad\qquad\qquad\qquad\qquad\qquad 64K$

Required $A_{st} = \frac{64}{.85 \times 20 \text{ ksi}} = 3.75$ sq in

Use 8 No. 11 similar to other columns in hot end to be better protected against unexpected temperature stress and have moment in the other direction.

<u>Ties and spacing:</u> according to ACI Code for tie of 1/4" spacing at least: $S = 48 \times 1/4 = 16''$, $b = 16''$, $< 16 \times 1.27$ use 16" sp.

$\therefore$ use bar No. 3 at 16" apart.

B. Concrete Beams

1. Beam in direction of stage wall

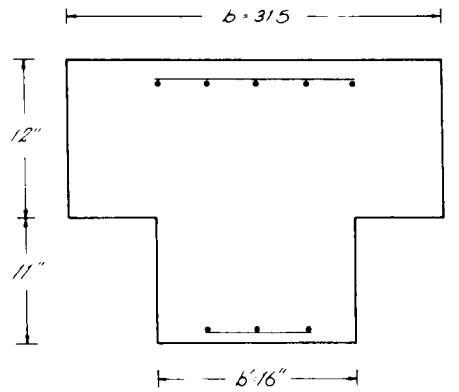

L = center to center of columns = 10.5'

From ACI Code:

b = 1/4 x 10.5 = 31.5'

(31.5' - 16')/2 = 8' < 8 x 12'

< 1/2 x (10.5 x 12-16)

Then b = 31.5'

Weight of roof and beam = 2 K/ft

P = 13.78 psi = 14 psi = 2 KSF

w = 2 x 10.5 + 2 = 23 K/ft

Considering a beam with more than two span and moment coefficient of 1/14, 1/10 (ACI)

M = + 1/14 x 23 x 10.5^2 = 180K' (+) at center

M = -1/10 x 23 x 10.5^2 = 250K' (at continuous end)

M = -1/24 x 23 x 10.5^2 = 105K' (at wall end)

V = 1/2 x 23 x (10.5' -16') = 104K

I. At continuous end of beam:

Max. steel p = .18 f'c/f_y = $.18\frac{3}{10}$ = .027

M = $250^{K'}$ V = 104^{K}

(1) From Table 1 (ACI) for f_s = 24,000

From Table 4, b x d = 16' x 21.5' : F = .615

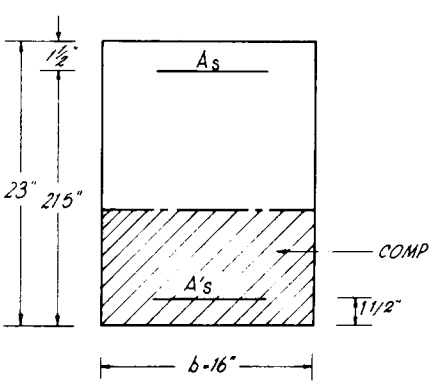

M = 250

KF = 120

M-KF = $130^{K'}$

(2) From Table 7,
24,000/9.2/1350

$$\frac{d'}{d} = \frac{1.5}{21.5} = .07 \; : \; c = 1.45$$

$$\therefore A'_s = \frac{M-KF}{cd} = \frac{120}{1.45 \times 21.5} = 3.85 \text{ sq in}$$

(3) From Table 1 $f_s = 24,000$, $a = 1.76$

$$\therefore A_s = \frac{M}{ad} = \frac{250}{1.76 \times 21.5} = 6.3 \text{ sq in}$$

(4) Check bond requirements:

$$\frac{1000V}{7/8d} = \frac{1000 \times 104}{7/8 \times 21.5} = 5500$$

From Table 12 $Z = .26$

From Table 13 $j = .90$

$$f_s = \frac{12,000M}{jdA_s} = \frac{12,000 \times 250}{.9 \times 21.5 \times 8.7} = 17,800 \text{ psi} \quad \text{O.K.}$$

$$f_c = \frac{f_s}{n} \times \frac{K}{1-K} = \frac{17,800}{9.2} \times \frac{.392}{.608} = 1250 \text{ psi} \quad \text{O.K.}$$

$$f'_s = 2fs \times \frac{K-\frac{d'}{d}}{1-K} = 2 \times 17,800 \times \frac{.322}{.608} = 19,000 \text{ psi} \quad \text{O.K.}$$

II. <u>At mid-span of beam</u>

$A_s = 6.32$ sq in $\qquad M = 180^{K'}$

$$1. \quad K = \frac{\frac{nAs}{bt} + 1/2 + t/d}{\frac{nAs}{bt} + 1.000} = \frac{\frac{9.2 \times 6.32}{31.5 \times 12} + 1/2 \; \frac{12}{21.5}}{\frac{9.2 \times 6.32}{31.5 \times 12} + 1.000}$$

$$K = \frac{.154 + .280}{.154 + 1.000} = .375$$

From Table 9, for t/d = .56,

K = .375, j not in table

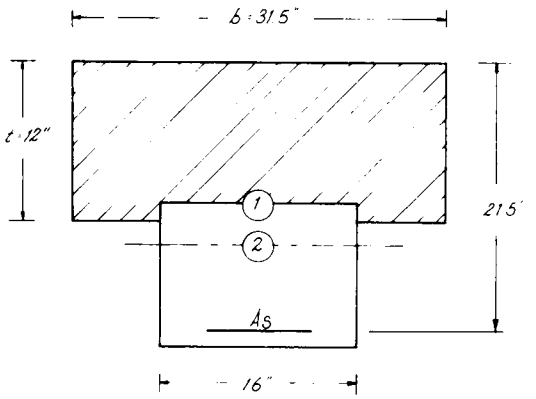

2. $$m = \frac{nAs}{b'd} + \frac{(b-b')t}{b'd}$$

$$= \frac{9.2 \times 6.32}{16 \times 21.5}$$

$$+ \frac{15.5 \times 12}{16 \times 21.5}$$

$$= .302 + .54 = .842$$

$$q = \frac{nAs}{b'd} + \frac{(b-b')t}{b'd} \times \frac{t/2}{d} = .302 + .15 = .452$$

From Table 11 K = .43 $y = \dfrac{\dfrac{2 \times 12}{1 - 3 \times .43 \times 21.5}}{2 - 12/.43 \times 21.5} = .193$

$$j = 1 - y\frac{t}{d} = 1 - .193\,\frac{12}{21.5} = .99$$

From Table 5a for A_s = 6 No. 10 A_s = 7.62 sq in

Σ. = 24

$$\therefore\ u = \frac{1,000\ V}{\Sigma .7/8\,d} = \frac{5500}{24} = 230 > 147$$

By this calculation it can be seen that the bond stress calls for

11 No. 8 A_s = 8.7 sq in

Use steel of f_s = 20,000 $\therefore$ K = 226 F = .615

M = 250

KF = 139

111

$$A'_s = \frac{111}{1.45 \times 21.5} = 3.56 \text{ sq in}$$

$$A_s = \frac{M}{ad} = \frac{250}{1.44 \times 21.5} = 8.1 \text{ sq in} < 8.7 \text{ sq in (top steel)}$$

$$U = \frac{5500}{34.5} = 160 < 165 \quad \text{O.K.}$$

for A'_s (bottom steel) use 5 No. 8 bar

Top steel continue to $\ell'/3 = 9/3 = 3$ ft each side

<u>Design T-beam for $+M = 180^{K'}$</u>

From Table 1, 16,000/9.2/1350

$K_w = 252$

From Table 4, $b' \times d = 16 \times 21.5$

$F_w = .615$

From Table 8, $t/d = \frac{12}{21.5} = .56$

From Table 4, $(b-b')d = 15.5 \times 21.5$

$K_f \cong 252 \qquad F_f = .69$

Then: $M = 180^{K'}$

$F_w K_w = 153^{K'}$

$K_f F_F = 174^{K'}$ negative

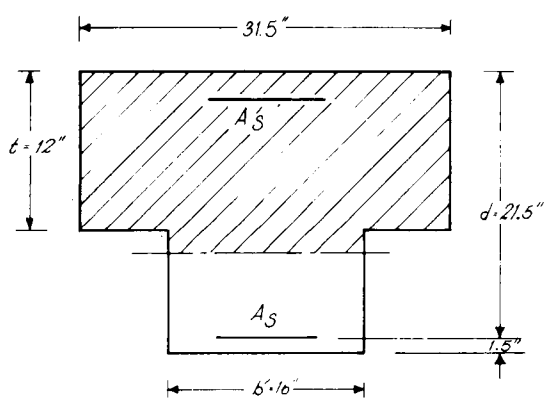

Compressive reinforcement not required.

$$A_s = \frac{180}{ad} = \frac{180}{1.44 \times 21.5} = 5.8 \text{ sq in}$$

Use 8 No. 8 bar $\qquad A_s = 6.32$

From Table 16 for vertical stirrups B = 1

Then: $\frac{\nu' b}{B A_\nu f_\nu} = \frac{195 \times 16}{1 \times 8000} = .39$

Using Diagram 17, read spacing of stirrups

(1) for $\nu_c < 3\sqrt{f'c}$ max $s = \frac{d}{2} = \frac{21.5}{2} = 10.75''$

(2) $s = \frac{A_\nu}{.0015\ b} = \frac{2 \times .20}{.0015 \times 16}$

$= 16.5''$

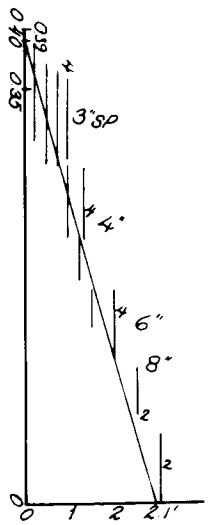

3 space at 3", 2 at 4", 2 at 6",

1 at 8" = 2.92'

Check stresses:

(1) $A_s = 8.7$ sq in

$A'_s = 3.95$ sq in

$M = 250^{K'}$

$$m = \frac{nA_s}{bd} + \frac{(2n-1)A'_s}{bd} = \frac{9.2 \times 8.7}{16 \times 21.5} + \frac{17.4 \times 3.95}{16 \times 21.5}$$

$$= .232 + .2 = .432$$

$$q = \frac{nA_s}{bd} + \frac{(2n-1)A'_s}{bd} \times \frac{d'}{d} = .232 + .2 \times \frac{1.5}{21.5} = .246$$

From Table 11 K = .392

$$1/K \times \frac{(2n-1)}{bd} A'_s = \frac{.2}{.392} = .51$$

$1/K \times \frac{d'}{d} = 1/.392 \times \frac{1.5}{21.5} = .178$

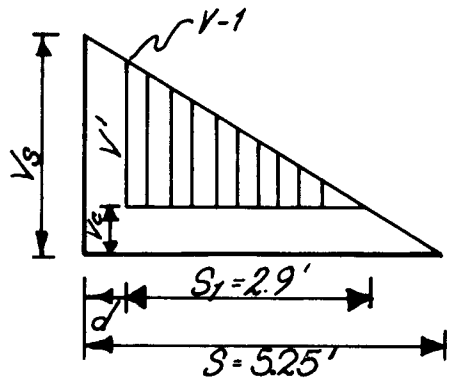

Vertical stirrups in beam:

$V_s = 120^K$

$w = 23$ K/ft $\quad \nu_c = 1.1\sqrt{f'_c} = 60$ psi

$S = 1/2\ \ell = 10.5/2 = 5.25$ ft

No. 3 U-stirrups

Unit shear at support

$$\nu_s = \frac{1000V_s}{bd} = \frac{1000 \times 120}{16 \times 21.5}$$

$$= 350 \text{ psi}$$

Shear at distance d

$$V_d = V_s - wd = 120 - 23 \times 16/12 = 88^K$$

Unit shear at distance d $\quad \nu_d = \frac{88,000}{16 \times 21.5} = 255$ psi

Net shear carried by stirrups

$$\nu' = \nu_d - \nu_c = 255 - 60 = 195 \text{ psi}$$

The required stirrup distance S_1 :

$$S_1 = \frac{\nu'}{\nu_s} S = \frac{195}{350} \times 5.25 = 2.9'$$

From Diagram 17 for $f_\nu = 20,000$ and No. 4 U-stirrups:

$$A_\nu f_\nu = 8,000$$

$$f_s = \frac{12,000\ M}{jdA_s} = \frac{12,000 \times 180}{.99 \times 21.5 \times 6.32} = 16,000 \text{ psi}$$

$$f_c = \frac{f_s}{n} \times \frac{K}{1-K} = \frac{16,000}{9.2} \times \frac{.43}{.57} = 1200 \text{ psi}$$

Therefore, beam (B) would be as follows:

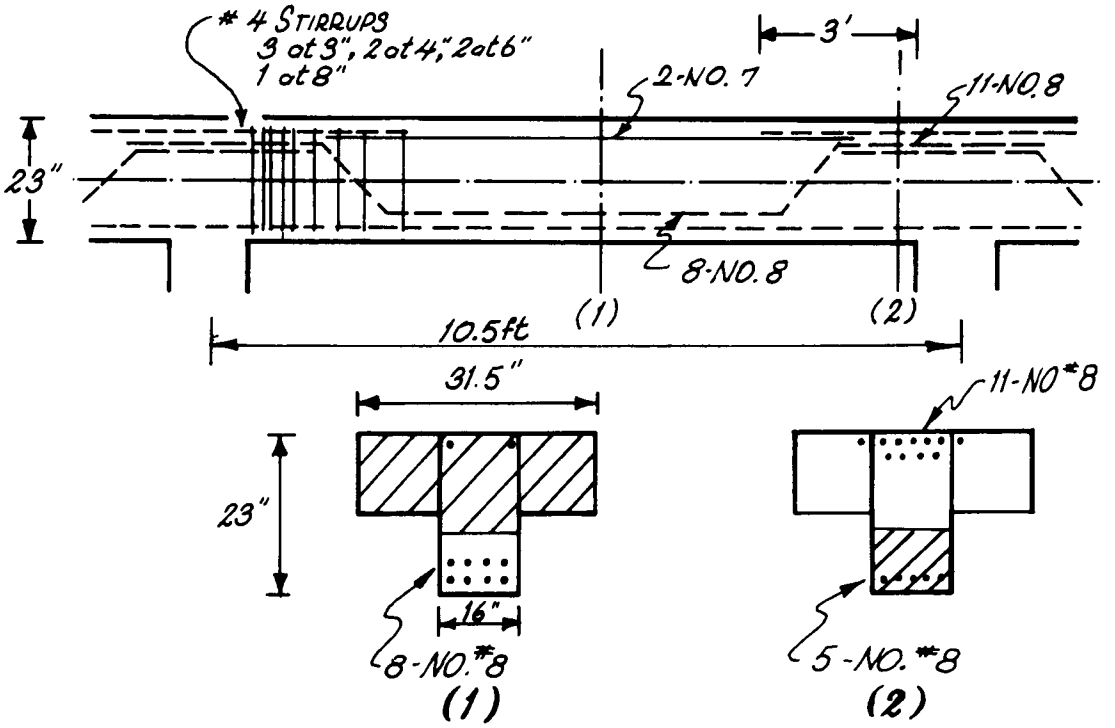

Beam under tube bundle

w = 3620 (bundle weight) x 10.5 (width) = 38,000 lb/beam

weight of beam = 1.25 x 10.5 x 150 = 1,970 lb/beam

39,970 lb/beam

$w = 39.970/10.5$ (length)

$= 3,800$ lb/ft

$M = 1/12 \times 3.8 \times 10.5^2 = 35^{K'}$

$A_s = \frac{M}{ad} = \frac{35}{1.13 \times 35''} = .87$

$V = \frac{39,970}{2} = 19.98^K$

$\frac{1000 \times V}{7/8\ d} = \frac{1000 \times 19.98}{7/8 \times 35''} = 650$

bond required

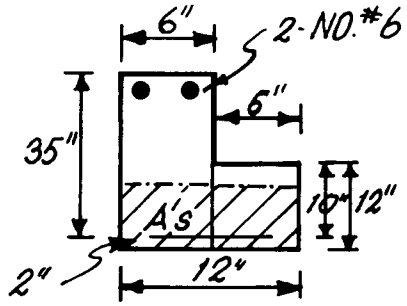

$U = \frac{1000V}{7/8d\ \Sigma_0} = \frac{650}{4.7} = 138 < 248$ O.K.

Now consider $b \times d = 12 \times 10$ $F = .1$

Then $F = .1$ and $K = 252$

$M = 35^{K'}$

$KF = .1 \times 252 = 25^{K'}$

$M\text{-}KF = 10^{K'}$

$\frac{d'}{d} = 2/10 = .2$ Table 7 $C = .85$

$A_s' = \frac{10^{K'}}{.85 \times 10} = 1.18$ sq in

Use 4 - No. 6 bar

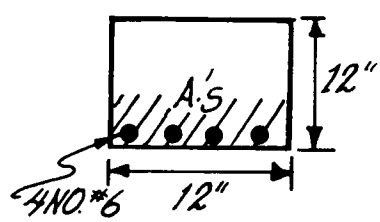

Beam under tray

$w = (4.5' + .5) \times .5 \times 1 \times 150$

$= 375$ lb/ft

$$M = \frac{w\ell^2}{12} = \frac{.375 \times 10.5^2}{12} = 3.45^{K'}$$

$$A_s = \frac{3.45}{1.13 \times 1.5} = .41$$

Use 2 No. 6

For A'_s, also use 2 No. 6

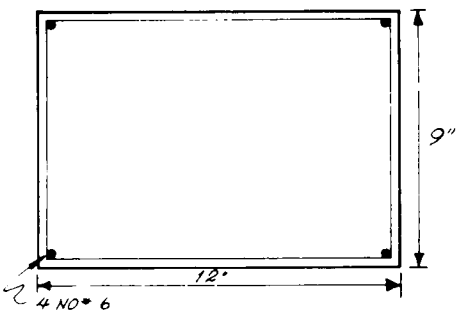

C. Concrete Slabs

1. Roof Concrete Panel

Stage 48 recovery

Roof dead load $= \frac{164}{144} = 1.14$ psi

Internal pressure = 13.78-1.14

= 12.64 psi

Design for p = 14 psi = 2 ksf

Temp. change = 33.45 F

$M_{max.} = .095\ p\ a^2$ (fixed end)

for $f'_c = 3000$ psi

$f_c = 1350 \qquad n = 9$

and $M = .045 \times 2 \times 10.5^2 = 10.4^{K'}$

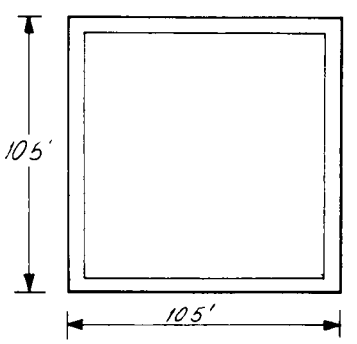

From Table 2 (ACI) $d = 10''$

$D = 10'' + 1\text{-}1/2 = 11.5$

$\therefore\ D = 12''$ O.K.

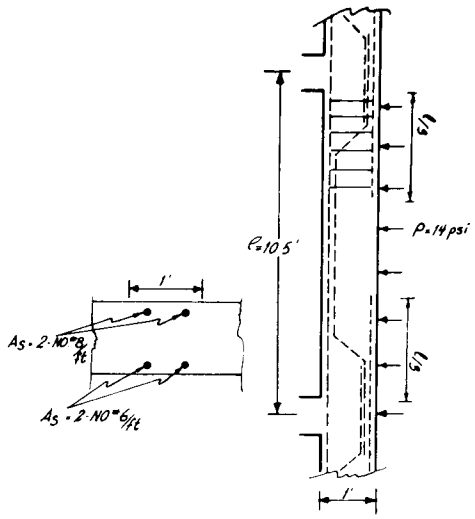

$$A_s = \frac{M}{ad} = \frac{10.4}{1.13 \times 10.5} = 88 \text{ in}^2$$

$$A_s = \frac{.018}{.045} \times .88 = .35$$

(at center)

$$V = 1/2 \times 10.5 \times 2^{ksf} = 10.5 \qquad \Sigma_0 = 7.1$$

$$u = \frac{1000V}{\Sigma_0 7/8\ d} = \frac{10,500}{7.1 \times 7/8 \times 10.5''} = 162 \quad \text{O.K.}$$

$$\nu = \frac{10,500}{12 \times 10} = 88 < 110 \quad \text{O.K.}$$

<u>Check stresses in roof panel</u>

$$m = \frac{nA_s}{bd} + \frac{(2n-1)A'_s}{bd} = .128 + .024 = .152$$

$$q = .128 + .024\ \frac{1.5}{10.5} = .128 + 0.014 = .142$$

From Table 1 $K = .4$

$$1/K \times \frac{(2n-1)A'_s}{bd} = 1/.4 \times .024 = .06$$

$$1/K \times \frac{1.5}{10.5} = 1/.4 \times \frac{1.5}{10.5} = .36$$

From Table 12 $Z = .33$

From Table 13 $j = .87$

Then:

$$f_s = \frac{12,000\ M}{jdA_s} = \frac{12,000 \times 22}{.87 \times 10.5 \times 2} = 14,400 \text{ psi}$$

$$f_c = \frac{f_s}{n} \times \frac{K}{1-K} = \frac{14,400}{9.2} \times \frac{.4}{.6} = 1050 \text{ psi}$$

$$f'_s = 2f_s \frac{\frac{.4}{.6} - \frac{1.5}{10.5}}{} = \frac{28,800 \times .26}{.6} = 12,400 \text{ psi}$$

2. <u>Exterial and mid-wall</u>

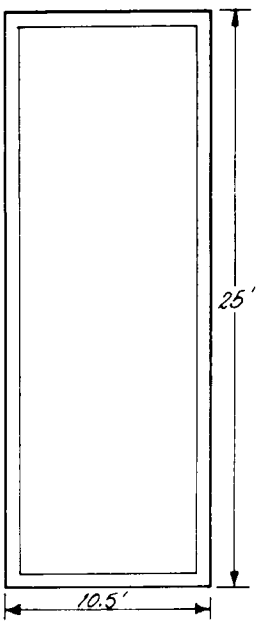

According to code:

max. reinforcing distance = 18"

min. steel $A_s > .0025$ Ag

$p = 14 \times 144 = 2^{ksf}$

$M_{max.} = .086 \times 2 \times 10.5^2 = 20^{K'}$

$= .033 \times 2 \times 25^2 = 18^{K'}$

D = 12 in

A_s = 2 No. 8 at top and 2 No. 6 at bottom

<u>Floor slab under column</u>

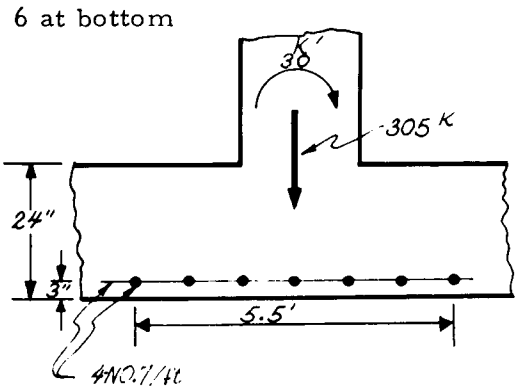

Vertical D. L. = 85 kips

load of vacuum:

$2^{ksf} \times 10.5 \times 10.5 = \frac{220}{305^K}$

Moment = $30^{K'}$

$$f_{soil} = \frac{85}{5.5 \times 5.5} \pm \frac{30}{5.5^3/6}$$

$$= 2.8 \pm 1.08 = 3.88 \text{ ksf}, \ 1.72 < 4.0 \text{ ksf}$$

Use D = 2' for soil bearing control

Steel in each direction:

$$A_s = \frac{M}{1.13 \times 20} = \frac{30}{1.13 \times 20} = 1.35 \text{ sq in}$$

$$u = \frac{V}{\Sigma_0 jd} \rightarrow \Sigma_0 = \frac{51,000^{lb}}{350 \times .87 \times 21} = 7.8''$$

Assume 4 - No. 7 bar/ft $\qquad u = \frac{4.8\sqrt{f'c}}{D} = 270$

$$\Sigma_0 = \frac{51,000^{lb}}{270 \times .87 \times 21} = 10.4 \qquad \text{Use 4 - No. 7 bar/ft}$$

Stage wall reinforcing:

For stage wall a minimum reinforcement according to UBC Code is considered because the thickness is less than 7".

Use 2 No. 4 bar each direction and at each side

From Table 7 (ACI) $\qquad C = 1.08$

$$A_s' = \frac{45}{1.08 \times 10.5}'' = 3.95 \text{ in}^2$$

$$e/d = \frac{4.86}{10.5} = .46 \qquad j = .846$$

Since i became negative, go to column solution.

Axial load = 180^K

Load carried by cone = 92^K

Load carried by steel = 88^K

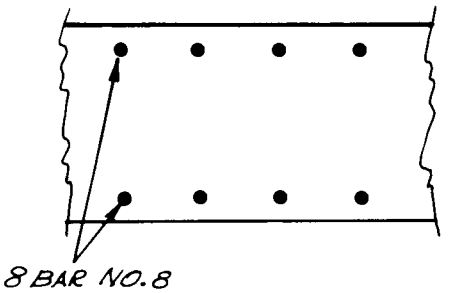

$$A_{st} = \frac{88}{.85 \times 16^{ksi}} = 6.5 \text{ in}^2$$

$$P_g = \frac{6.5}{12 \times 12} = .045$$

Use 8 - No. 8 bar

$$\frac{N}{f'cAg} = \frac{180}{3 \times 144} = .416$$

Bottom slab of water box

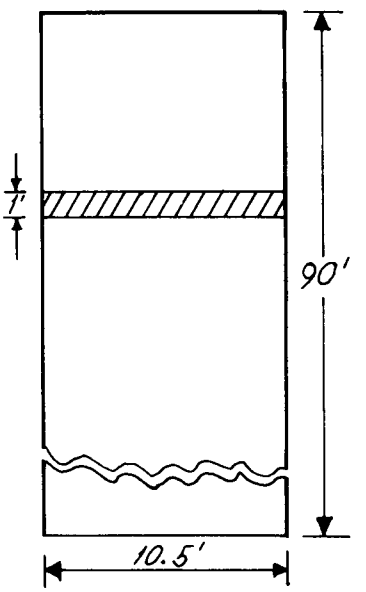

w = 1070 psf and 730 psf

$$M = \frac{1070 \times 10.5^2}{12} = 9800 \text{ lb/ft}$$

$$A_s = \frac{M}{ad} = \frac{9.80}{1.13 \times 7.5} = 1.16 \text{ sq in}$$

Use 2 No. 7 in each direction

Slab of water tray

$$w = \frac{4''}{12} \times 150 + \frac{15}{12} \times 64$$

$$= 50 + 80 = 130 \text{ psf}$$

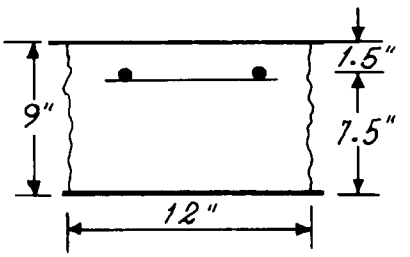

From UBC, use coefficient

$C_{positive} = .027 \quad (1)$

$= .039 \quad (2)$

$C_{negative} = .075 \quad (1)$

$= .096 \quad (2)$

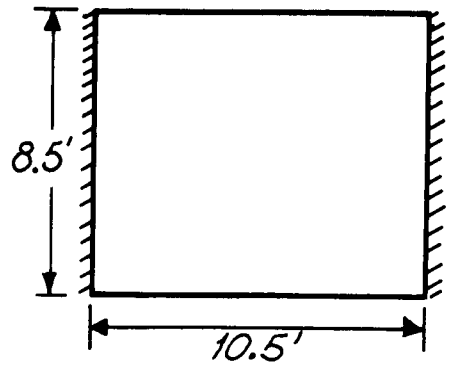

$M = .096 \times 130 \times 10.5^2 = 1.380^{K'}$

$A'_s = \frac{M}{cd} = \frac{1.38}{1.13 \times 2.5} = .48$

$u = \frac{4.8\sqrt{f'c}}{D} = \frac{4.8 \times 3000}{0.75}$

$= 350$

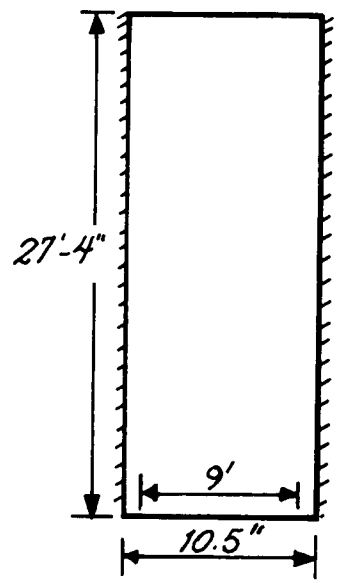

Use 1 No. 6 at 11" in each direction

1.6 lb/ft x 12 in./4 in. x 1 ft x 27 = 120

$v = \frac{\omega \ell}{2} = \frac{130 \times 10.5}{2} = 680$ lb

$u = \frac{V}{\Sigma_0 jd} = \frac{680}{2.56 \times .8 \times 2.5}$

$= 132$ psi < 350 psi O.K.

C.2.2.3 All-Concrete Alternate Case

In this alternate case the steel portion of the evaporator is replaced by a concrete structure similar to existing concrete portion of the evaporator. The evaluation of the replaced concrete portion is as follows:

Roof Slab and Exterior Walls

Maximum pressure = 12.2 psi. The roof slab and exterior walls have been analyzed for interior pressure of 14 psi and stress was below the allowable stress, therefore the slab can withstand pressure in the opposite direction (exterior pressure) of 12.2 psi. However, the reinforcing steel should be furnished in the revised face of the slab; i.e., the reinforcement which has been located at A in the reference plant will be considered for location B, and vice versa.

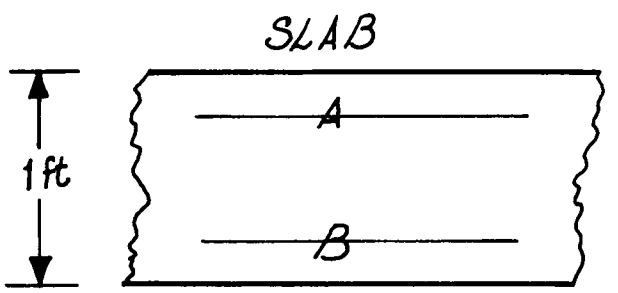

Hot End Wall

The wall is under pressure of 12.2 psi and the differential temperature of 176.95 F. Since the condition of this wall is similar to that of slab, a two-foot thick concrete wall was considered. The amount of the reinforcing steel would be similar to that of slab and would be arranged as shown on the following page.

This wall would be provided with larger sections than necessary because of the excessive stresses that might occur at the corners.

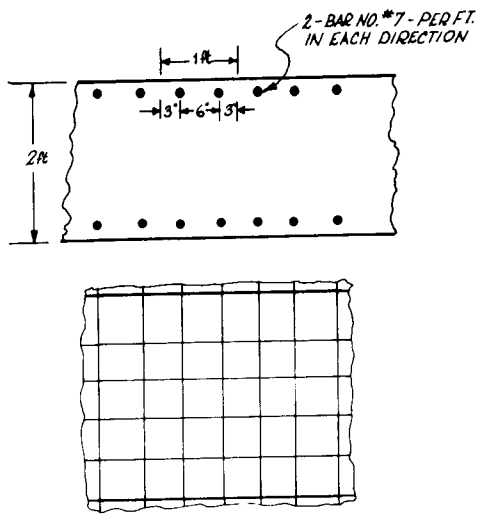

Columns

The critical section would be located at the end of the evaporator, where the internal pressure is 12.0 psi.

Assuming all pressure would be carried by the column itself, the tension force is

$$P = 9.5 \times 9.5 \times .144 \times 12.2 = 158^{K}$$

Assuming that the reinforcing bar itself takes this load,

Since:

Area of steel = $8 \times 1.27 = 10.2^{in\ 2}$

Then:

Axial stress = 158/10.2

= 15.6 ksi < 20 ksi

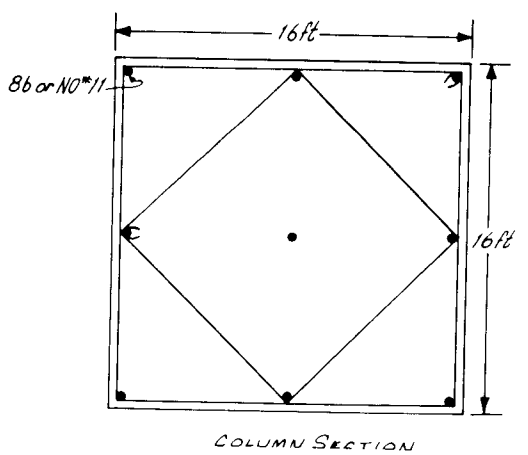

It is obvious that the concrete part of the column can withstand some tension load and therefore the existing reinforced concrete column would be safe under this condition.

Concrete Beams

The existing concrete beams of the concrete portion are designed for external pressure of 14 psi, dead load and live load. The same beam is used in the hot end, which is under maximum internal pressure of 12.2 psi. Here the dead loads reduce the stresses in the beams. In this case the steel reinforcement should be designed in reverse face of the beams.

The existing beams will be in safe condition for this portion, provided that the steel reinforcements are placed in the reverse face of the beams.

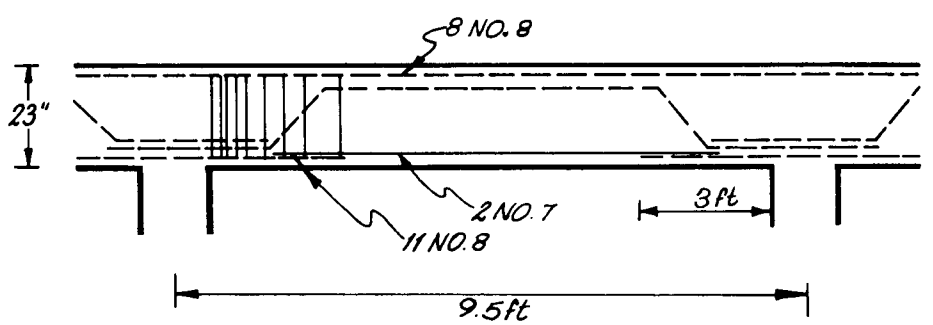

REINFORCED CONCRETE BEAM

ORNL-4214
Special

INTERNAL DISTRIBUTION

1. Biology Library
2-4. Central Research Library
5-6. ORNL - Y-12 Technical Library
Document Reference Section
7. Laboratory Records, ORNL R.C.
8. T. D. Anderson
9. S. J. Ball
10. S. E. Beall
11. M. Bender
12. R. E. Blanco
13. E. G. Bohlmann
14. H. I. Bowers
15. R. B. Briggs
16. C. C. Burwell
17. R S. Carlsmith
18. R. H. Chapman
19. C. W. Collins
20. S. J. Cromer
21. F. L. Culler
22. J. G. Delene
23-24. R. A. Ebel
25. M. C. Edlund
26. D. M. Eissenberg
27. J. L. English
28. H. E. Goeller
29-53. R. P. Hammond
54. J. W. Hill
55. E. C. Hise
56. H. W. Hoffman
57. K. O. Johnsson
58. W. H. Kelley
59. K. A. Kraus
60. D. M. Lang
61. C. E. Larson
62. D. B. Lloyd
63. M. I. Lundin
64. R. N. Lyon
65. H. G. MacPherson
66. J. W. Michel
67. J. E. Mrochek
68. J. C. Moyers
69. Claire Nader
70. R. C. Olson
71. R. B. Parker
72. J. A. Parsons
73. H. R. Payne
74. A. M. Perry
75. C. M. Podeweltz
76. S. A. Reed
77. A. W. Savolainen
78. W. F. Schaffer
79. S J. Senatore
80. J. A. Smith
81. M. J. Skinner
82. R. K. Sood
83. I. Spiewak
84. D. A. Sundberg
85. T. Tamura
86-89. S. A. Thompson
90. W. E. Thompson
91. R. P. Wichner
92. R. Van Winkle
93. A. M. Weinberg
94. W. C. Yee
95. G. Young

EXTERNAL DISTRIBUTION

96. R. L. Philippone, Atomic Energy Commission, Oak Ridge
97-121. E. N. Sieder, Office of Saline Water, Washington, D. C.
122-126. W. A. Williams, Atomic Energy Commission, Washington
127. Laboratory and University Division, AEC, ORO
128-142. Division of Technical Information Extension, ORO

Senatore SJ + Smith JA

STUDY OF 250-MGD MULTISTAGE FLASH DISTILLATION PLANT WITH TWO-LEVEL BRINE FLOW - PART I, DESIGN AND COST ESTIMATE - PART II, PRELIMINARY ENGINEERING ANALYSIS AND CAPITAL COST ESTIMATE

Oak Ridge National Laboratory, Tenn. + Bectel Corp., San Francisco

ORNL-4214 (Nov. 1968), 257 p, 56 fig, 3 ref

The report presents the findings and conclusions of a conceptual design study of a 250-Mgd MSF desalination plant for a hypothetical Southern California location in 1975-1980. The plant is coupled to a 2500-Mwt boiling-water reactor through a backpressure turbine. The design uses a two-level brine recycle system with fifty stages, a flashing brine temperature range of 250 deg F to 91.8 deg F and a product water temperature of 90 deg F. The evaporator shell is steel above and steel-lined concrete below 200 deg F. The evaporator tubing is 90/10 copper-nickel with 0.035-in.-thick wall in the heat recovery section and 0.049-in.-thick wall in the heat reject section. The long-tube concept is used with two tube lengths of approximately 240 ft each in the heat recovery section. A two-stage spray deaerator and conventional sulfuric acid treatment is used for the makeup seawater. The total plant capital cost is $159,725,000 or $0.599 per daily gallon of capacity. The water cost is $0.205/1000 gal.

*CONCEPTUAL DESIGNS + *MULTISTAGE FLASH DISTILLATION + *MULTILEVEL PLANTS + CONSTRUCTION COSTS + COST BREAKDOWNS + FLASH CHAMBERS + STRUCTURAL DESIGNS + HORIZONTAL TUBE CONDENSERS + DEAERATORS + INSTRUMENTATION + OSW SPONSORED + 250 PLUS MGD PLANT + CONCRETE CONSTRUCTION