OAK RIDGE NATIONAL LABORATORY LIBRARIES
3 4456 0548413 3

CENTRAL RESEARCH LIBRARY
DOCUMENT COLLECTION

NATIONAL LABORATORY
operated by
UNION CARBIDE CORPORATION
NUCLEAR DIVISION
for the
U.S. ATOMIC ENERGY COMMISSION

ORNL-TM-1312, Vol. 7

50

STRUCTURAL ANALYSIS OF SHIPPING CASKS

VOL. 7. CASK TIE-DOWN DESIGN MANUAL

J. H. Evans

OAK RIDGE NATIONAL LABORATORY
CENTRAL RESEARCH LIBRARY
DOCUMENT COLLECTION
LIBRARY LOAN COPY
DO NOT TRANSFER TO ANOTHER PERSON
If you wish someone else to see this
document, send in name with document
and the library will arrange a loan.
UCN-7969
(3 3-67)

NOTICE This document contains information of a preliminary nature and was prepared primarily for internal use at the Oak Ridge National Laboratory. It is subject to revision or correction and therefore does not represent a final report.

LEGAL NOTICE

This report was prepared as an account of Government sponsored work. Neither the United States, nor the Commission, nor any person acting on behalf of the Commission:

A. Makes any warranty or representation, expressed or implied, with respect to the accuracy, completeness, or usefulness of the information contained in this report, or that the use of any information, apparatus, method, or process disclosed in this report may not infringe privately owned rights; or

B. Assumes any liabilities with respect to the use of, or for damages resulting from the use of any information, apparatus, method, or process disclosed in this report.

As used in the above, "person acting on behalf of the Commission" includes any employee or contractor of the Commission, or employee of such contractor, to the extent that such employee or contractor of the Commission, or employee of such contractor prepares, disseminates, or provides access to, any information pursuant to his employment or contract with the Commission, or his employment with such contractor.

INTRA-LABORATORY CORRESPONDENCE

OAK RIDGE NATIONAL LABORATORY

April 2, 1970

To: Recipients of Subject Report

Report No.: ORNL-TM-1312, Vol. 7 Classification: Unclassified

Author(s): J.H. Evans

Subject: Structural Analysis of Shipping Casks. Volume 7. Cask Tie-down Design Manual.

Request compliance with indicated action:

Please affix the attached corrections for lines no. 6, 7, and 8 on page 13 of your copy(ies) of the subject report. It is prepared on gummed stock for your convenience.

N.T. Bray, Supervisor
Laboratory Records Department
Technical Information Division

NTB:wm

Att.

UCN-430
(3 5-61)

ORNL TM-1312
Vol. 7

Contract No. W-7405-eng-26

General Engineering Division

STRUCTURAL ANALYSIS OF SHIPPING CASKS
VOL. 7. CASK TIE-DOWN DESIGN MANUAL

J. H. Evans

MAY 1969

OAK RIDGE NATIONAL LABORATORY
Oak Ridge, Tennessee
operated by
UNION CARBIDE CORPORATION
for the
U.S. ATOMIC ENERGY COMMISSION

OAK RIDGE NATIONAL LABORATORY LIBRARIES

3 4456 0548413 3

CONTENTS

Abstract 1
1. INTRODUCTION 1
2. SUMMARY 3
3. BOLTED TIE-DOWN 4
Rectangular Base 4
Circular Base 9
4. TENSION MEMBER TIE DOWN 15
Four-Member Tie-Down 15
The Loggers' Tie 19
Use of Chocks 23
Stresses in Members 27
Member Attachment Methods 31
Lugs 33
Bolts Securing Lugs 34
REFERENCES 35
NOMENCLATURE 36

LIST OF FIGURES

Figure Number	Title	Page Number
1	Loading, "Beam" Details, Stress Distribution, and Deformed Section for Rectangular Base of Cask Bolted Directly to Vehicle Bed	5
2	Tie-Down Computational Model of Cask With a Circular Base	10
3	Neutral Axis and Stress Distribution for Tie-Down of Circular Base	10
4	Solutions of Eqs. 3.24 and 3.25 for Range of Values of θ	12
5	Four-Member Tie-Down	15
6	The Loggers' Tie	19
7	Methods of Securing Chocks to Vehicle Bed	23
8	Stress Analysis of a Chain Link of "Average" Proportions	30
9	Methods of Attaching Tie-Down Members to Cask Using Lugs Welded Directly to the Cask	31
10	Different Schemes for Attaching Tie-Down Members to Cask and Vehicle Bed	32
11	Tie-Down Members Secured to Cask With Attachments Independent of the Cask	33

STRUCTURAL ANALYSIS OF SHIPPING CASKS
VOL. 7. CASK TIE-DOWN DESIGN MANUAL

Abstract

Analytical techniques developed to evaluate the more common types of tie-down used to secure a shipping cask to a vehicle bed during transport are presented in this report. These frequently encountered types include the rigid or bolted tie-down of casks with rectangular and circular bases and the tension member tie-down with four-member and loggers' ties. The use of chocks to reinforce the frictional force between the cask base and the vehicle bed is treated, and various methods of attaching members to the cask and vehicle bed are discussed.

1. INTRODUCTION

When a package containing radioactive or fissile material is shipped from one location to another, the package is subject to regulations[1,2] governing its structural integrity and shielding capability. One section of these regulations covers performance standards for tie-down systems used to secure the package to the transporting vehicle. If there is a system of tie-down devices that is a structural part of the package, the regulations require that the system be capable of withstanding a static force applied to the center of gravity of the package that has a vertical component of two times the weight of the package and its contents, a horizontal component along the direction of travel of ten times the weight of the package and its contents, and a horizontal component in the transverse direction of five times the weight of the package and its contents without generating stress in any material of the package in excess of the yield strength of that material.

If there is a structural part of the package not intended for use as a tie-down device that does not comply with the above requirement but that could be used to tie the package down, this part must be securely

covered, locked, or otherwise rendered inoperative for tie-down during transport. Each tie-down device that is a structural part of the package must be designed so that failure of the device under excessive load would not impair the ability of the package to meet the other requirements of the regulations.

The integrity of the tie-down system is important from the standpoint of safeguarding the general public from injury, protecting the transporting vehicle and its contents, and insuring against damage to the package and its contents. However, the wording of the regulations leaves some doubt as to the extent of the designer's or shipper's responsibility in providing tie-down. Recognizing the general nature of the regulations in that they cover shipping packages ranging from very small cardboard boxes to multi-ton shielded casks and keeping in mind that the interest of the regulations is to safeguard the general public, the tie-down section of the regulations has been interpreted to require that an adequate tie-down system be included in the design of shielded shipping casks and that the adequacy of this system must be demonstrated by using analytical or experimental methods.

In the course of examining shipping casks relative to their compliance with the regulations, analytical techniques and design equations applicable to tie-down analysis have been developed. These techniques and equations are presented in this report with the expectation that they will be of some value to the cask designer. However, it is not implied that the tie-down schemes and analytical techniques discussed here are the only acceptable ones or that they are superior to other schemes that might be used.

2. SUMMARY

Numerous schemes have been used to secure shipping casks to vehicle beds, rail cars, or ship decks. Most are detail variations of two basic schemes: the rigid or bolted tie-down and the tension member tie-down. Although it has certain obvious disadvantages unless the cask is shipped in the same vehicle routinely, the bolted tie-down is far superior to the tension member tie-down from a load carrying standpoint, particularly for large casks, and it offers the most promise for compliance with the regulations. Analytical procedures were developed to evaluate the bolting systems for casks with rectangular and circular bases secured directly to a vehicle bed or to a subbase that is subsequently secured to a bed.

In certain instances, it may be desirable to tie a cask down with members such as cables, chains, or rigid rods. Procedures were developed to analyze four-member and two-member or loggers' ties. When using a four-member tie-down, caution must be exercised in designing the device by which the member is attached to the cask to insure that this device does not act as a punch upon impact from the free-fall conditions of the regulations. Generally, a shipping skid or subbase will be required for load distribution, and the possibility of attaching members to the subbase should not be overlooked. Occasionally, a cask is shipped in a cradle which also offers convenient points of attachment for members.

Chocks are generally used with tension member tie-downs to reinforce the frictional force at the junction of the cask or subbase and the bed of the vehicle, thereby insuring against movement of the cask relative to the vehicle bed. These devices will carry considerable load, and their use is considered good practice and necessary for all except very small casks. Chocks may be welded, bolted, or nailed to the vehicle bed, and procedures were developed to analyze these methods of attachment.

3. BOLTED TIE-DOWN

The physical situation of bolting the cask base directly to the bed of a vehicle or to a subbase, which then becomes a part of the tie-down system if the subbase is subsequently secured to the vehicle, is a common occurrence. From a load carrying standpoint, the bolted attachment systems are far superior for larger casks, and the bolting systems for casks with rectangular and circular bases are considered in this chapter.

Rectangular Base

The configuration of a rectangular base bolted directly to the bed of a vehicle can be examined analytically by considering the cask as a cantilevered beam loaded as required by the regulations and as shown in Fig. 1. The "beam" cross section resisting bending at the plane of attachment consists of a strip of the mating surfaces loaded in compression and a number of the bolts (not necessarily all of them) loaded in tension. The assumptions used to derive the equations necessary to examine this system are the same as those used in deriving the well-known flexure formula. The derivation and assumptions for the flexure formula can be found in any elementary text pertaining to strength of materials.

To obtain general equations for this system, it was assumed that the mating surfaces are of dissimilar materials. The neutral axis of the "beam" must first be located before the stresses can be determined. The computations may be simplified with small reduction in accuracy by neglecting the effect of the 2W vertical component on the location of the neutral axis and by superimposing the stresses resulting from the specified component loads.

By elementary statics, the sum of the forces normal to the Z axis equal zero (directional subscripts are not used since these equations are independent of direction). From this condition, Eq. 3.1 results.

$$\Sigma F_B + \int S'_W \, dA = 0 \ , \tag{3.1}$$

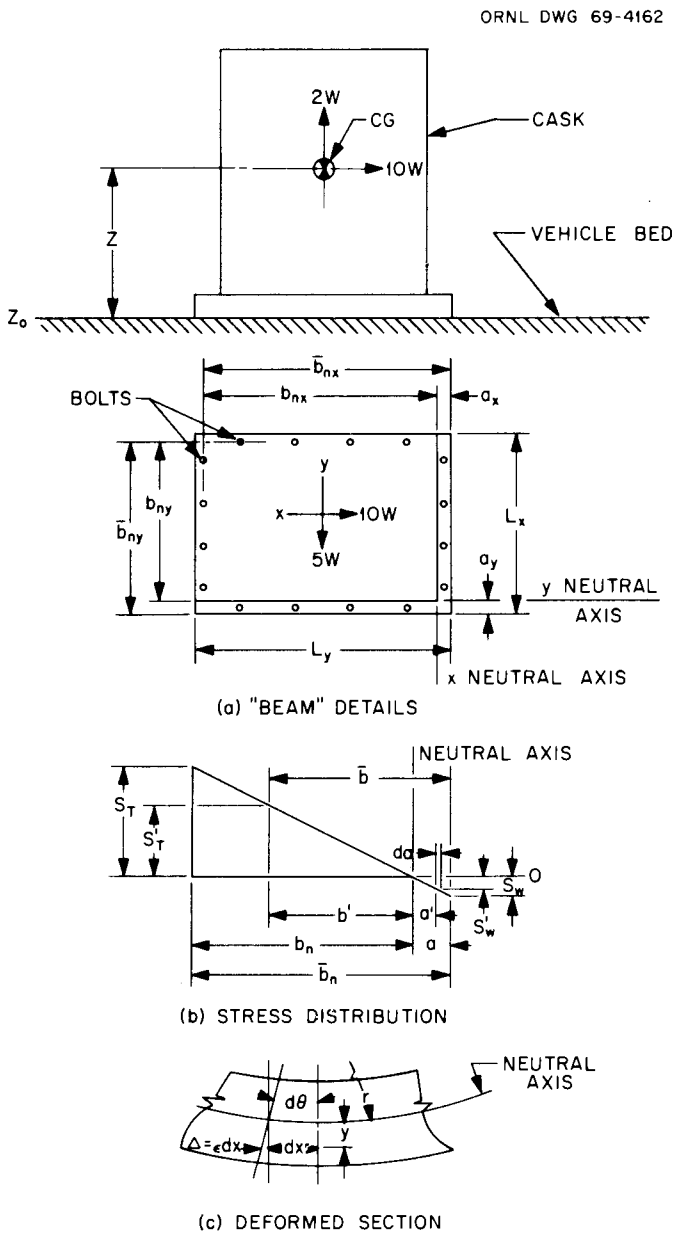

Fig. 1. Loading, "Beam" Details, Stress Distribution, and Deformed Section for Rectangular Base of Cask Bolted Directly to Vehicle Bed.

where

F_B = force in any bolt, lb,

S'_w = compressive stress in the "strip" (variable from 0 at the neutral axis to a maximum of S_w at a' = a), psi,

dA = differential area equal to L da'

where L = the length of the frame, in.

Letting

F_n = the force in the bolt most distant from the neutral axis, lb,

b_n = the distance from the neutral axis to the above bolt, in.,

b = the distance from the neutral axis to any bolt, in.,

A = the cross-sectional area of one bolt, in.^{2}, and

S_n = the tensile stress in the most distant bolt, psi,

by similar triangles, as shown in Fig. 1(b), for compatible strains assuming rigid flanges,

$$\frac{F_n}{b_n} = \frac{F_B}{b}$$

and

$$F_B = \frac{F_n b}{b_n} .$$

Then

$$F_B = \frac{F_n}{b_n} b . \tag{3.2}$$

Also by similar triangles,

$$\frac{S'_w}{a'} = \frac{S_w}{a} ,$$

and

$$S'_w = \frac{S_w}{a} a' .$$

Therefore,

$$\int S'_w \, dA = \frac{S_w L}{a} \int_o^a a' da = \frac{S_w La}{2} . \tag{3.3}$$

Letting material w be the material with the numerically smaller elastic modulus,

ϵ'_w = strain in the material w at any point, in./in.,

ϵ_w = maximum strain in the material w, in./in.,

ϵ'_T = strain in the material T at any point, in./in.,

ϵ_T = maximum strain in the material T, in./in.,

E_w = modulus of elasticity of the material w, lb/in.^{2},

E_T = modulus of elasticity of the material T, lb/in.^{2}

With reference to Fig. 1(c), it may be seen that by similar triangles

$$\frac{\epsilon dx}{y} = \frac{dx}{r} ,$$

$$\epsilon = \frac{y}{r} ;$$

and
$$\frac{\epsilon_w'}{\epsilon_T'} = \frac{a'}{b'} ,$$

$$\frac{\epsilon_w}{\epsilon_T} = \frac{a}{b_n} = \frac{\frac{S_w}{E_w}}{\frac{S_T}{E_T}} ,$$

$$S_w = \frac{a}{b_n}\left(\frac{S_T}{E_T}\right)E_w .$$

Substituting in Eq. 3.3 for S_w and equating Eq. 3.2 to Eq. 3.3, the resulting equation is

$$\frac{S_T A}{b_n} \Sigma b' = \left(\frac{a}{b_n}\right)\left(S_T\right)\left(\frac{E_w}{E_T}\right)\frac{La}{2} ,$$

$$A\Sigma b' = \frac{E_w La^2}{E_T^2} .$$

Solving for a and making the substitution $\Sigma b' = \Sigma\bar{b} - Na$ where $\bar{b}$ is the distance from the front of the frame to the bolt in question and N is the number of $\bar{b}$'s summed, a judgment estimate as to which, if any, bolts fall within the compression area must be made. It is noted that these bolts are not included in N and should not be summed in the $\bar{b}$ summations. Performing those operations,

$$A\Sigma\bar{b} - ANa = \frac{E_w La^2}{2E_T} , \tag{3.4}$$

and
$$a^2 \frac{E_w L}{2E_T} + ANa - A\Sigma\bar{b} = 0 . \tag{3.5}$$

By the quadratic equation,

$$a = \frac{-AN + \left(A^2N^2 + 2\frac{E_w L}{E_T} A\Sigma\bar{b}\right)^{1/2}}{\frac{E_w L}{E_T}} . \tag{3.6}$$

In the x direction,

$$a_x = \frac{-AN_x + \left(A^2N_x^2 + 2\frac{E_w L_x}{E_T} A\Sigma\bar{b}_x\right)^{1/2}}{\frac{E_w L_x}{E_T}} . \tag{3.7}$$

In the y direction,

$$a_y = \frac{-AN_y + \left(A^2N_y^2 + 2\,\frac{E_wL_y}{E_T}\;A\Sigma\bar{b}_y\right)^{1/2}}{\frac{E_wL_y}{E_T}} \quad . \tag{3.8}$$

A check must be made to see if the area outside the compression area actually contains the N bolts estimated. If it does not, a new estimate must be made and a_x and/or a_y must be recomputed. Summing moments,

$$M = \frac{S_T A\sum_1^n b^2}{b_n} + \frac{S_T L E_w}{b_n E_T}\int_o^a (a')^2\,da \quad . \tag{3.9}$$

Solving for S_T,

$$S_T = \frac{Mb_n}{A\sum_1^n b^2 + \frac{LE_w a^3}{3E_T}} \quad . \tag{3.10}$$

By superimposing the solution in the x and y directions, the maximum bending stress in the most stressed bolt may be computed.

$$S_{T\ max} = \frac{10WZb_{nx}}{\frac{b_{nx}}{A\sum_{b_{1x}} b_x^2} + \frac{L_xE_wa_x^3}{3E_T}} + \frac{5WZb_{ny}}{\frac{b_{ny}}{A\sum_{b_{1y}} b_y^2} + \frac{L_yE_wa_y^3}{3E_T}} \quad . \tag{3.11}$$

The direct tensile stress, S_D, in the bolts resulting from the 2W vertical load is equally distributed among the total number of bolts, N_T, and may be computed from Eq. 3.12.

$$S_D = \frac{2W}{N_TA} \quad . \tag{3.12}$$

The shearing stress, S_s, is also equally distributed.

$$S_s = \frac{\left[(10W)^2 + (5W)^2\right]^{1/2}}{N_TA} = \frac{11.18W}{N_TA} \quad . \tag{3.13}$$

The maximum normal stress in the most distant bolt from the neutral axis

$$S_n = S_T + S_D \quad . \tag{3.14}$$

The maximum stress may be computed by using the following expression, which is derived from Mohr's Circle of Stress.

$$S_{max} = \frac{S_n}{2} + \left[\left(\frac{S_n}{2}\right)^2 + S_s^{\,2}\right]^{1/2} \quad . \tag{3.15}$$

The value of S_{max} must be equal to or less than the yield stress of the bolt material.

In summary, a rectangular bolted tie-down with mating surfaces of dissimilar materials may be evaluated by

1. locating the x and y neutral axes from Eqs. 3.7 and 3.8, respectively;
2. computing the stresses S_T from Eq. 3.11, S_D from Eq. 3.12, and S_s from Eq. 3.13;
3. computing the stress S_n from Eq. 3.14; and
4. computing the maximum stress S_{max} from Eq. 3.15.

If the mating surfaces are of the same materials, the ratio E_w/E_T becomes unity and the same equations apply.

Circular Base

It is frequently advantageous to bolt a circular cask base to a skid or subbase. This connection is then a part of the tie-down system if the subbase is subsequently secured to the transporting vehicle, and as such, the connection must conform to the regulations. This type of system will also be analyzed as a cantilevered beam with the same assumptions and subject to the same limitations applicable for the rectangular base. In addition, this derivation is limited to mating surfaces with the same modulus of elasticity. As shown in Fig. 2, the cross section of the hypothetical "beam" at the plane of attachment consists of the bolts loaded in tension and a strip, a, loaded in compression. It is obvious that the stress should be computed at this plane. Since the geometry is circular, it is a computational advantage to combine the 5W and 10W components vectorially.

$$P = \left[(5W)^2 + (10W)^2\right]^{1/2} = 11.18\ W\ . \qquad (3.16)$$

The line of action of P has been taken as the x axis, which is rotated from the direction of travel by an angle α.

$$\alpha = \tan^{-1}\frac{5}{10} = 26.6^\circ\ . \qquad (3.17)$$

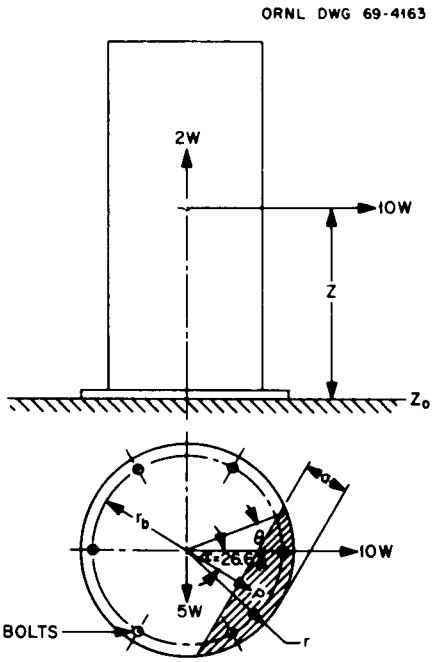

Fig. 2. Tie-Down Computational Model of Cask With a Circular Base.

First, the neutral axis, shown as the y axis in Fig. 3, must be located. By the laws os elementary mechanics, the sum of the forces

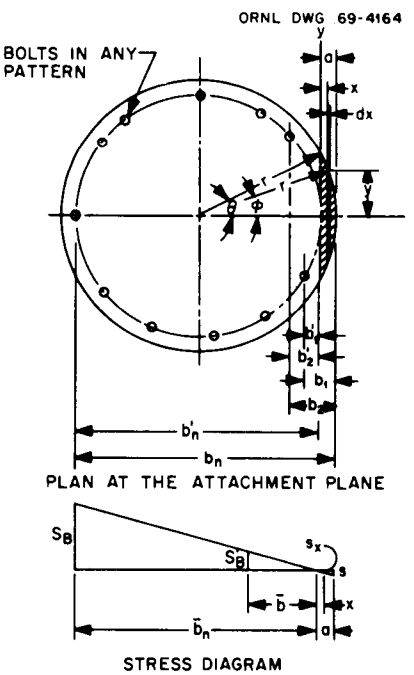

Fig. 3. Neutral Axis and Stress Distribution for Tie-Down of Circular Base.

acting on the attachment plane must be equal to zero.

$$\int_o^a S_x dA - \Sigma S_B' A = 0 , \tag{3.18}$$

where

S_B' = the flexural stress in any bolt, psi,

A = cross-sectional area of the bolt, in.^{2}

By similar triangles,

$$S_B' = \frac{S_B b'}{b_n'} = \frac{S_B(b - a)}{(b_n - a)}$$

and

$$S_B = \frac{S}{a}(b_n - a) .$$

Therefore,

$$S_B' = \frac{S}{a}(b - a) . \tag{3.19}$$

Also,

$$S_X = \frac{SX}{a} . \tag{3.20}$$

Substituting Eqs. 3.19 and 3.20 in Eq. 3.18,

$$\left(\int_o^a \frac{SX}{a} 2ydX\right) - \Sigma \frac{AS}{a} (b - a) = 0 ,$$

$$\left(2\int_o^a yXdX\right) - A\Sigma(b - a) = 0 . \tag{3.21}$$

By trigonometry,

$y = r \sin \phi$

$X = r(\cos \phi - \cos \theta)$,

$a = r(1 - \cos \theta)$,

$dX = -r \sin \phi \, d\phi$.

Thus,

$$2\int_\theta^o (r \sin \phi) r(\cos \phi - \cos \theta)(-r \sin \phi) d\phi$$

$$-A\Sigma[b - r(1 - \cos \theta)] = 0 . \tag{3.22}$$

Expanding

$$2r^3 \int_{\theta}^{o} (-\sin^2 \phi \cos \phi + \sin^2 \phi \cos \theta) d\phi - A\Sigma b + ArN(1 - \cos \theta).$$

Integrating,

$$2r^3 \left[- \frac{1}{3} \sin^3 \phi + \frac{\phi \cos \theta}{2} - \frac{\sin 2\phi \cos \theta}{4} \right]_{\theta}^{o} A\Sigma b + ArN(1 - \cos \theta)$$

$$- \frac{2r^3}{A} \left[- \frac{\sin^3 \theta}{3} + \frac{\theta \cos \theta}{2} - \frac{\sin 2\theta \cos \theta}{4} \right]$$

$$+ rN(1 - \cos \theta) = \Sigma b \ . \qquad (3.23)$$

If we let

$$\eta = \frac{\sin^3 \theta}{3} - \frac{\theta \cos \theta}{2} + \frac{\sin 2\theta \cos \theta}{4} \qquad (3.24)$$

and

$$\beta = (1 - \cos \theta) \ , \qquad (3.25)$$

$$\frac{2r^3}{A} \eta + rN\beta = \Sigma b \ . \qquad (3.26)$$

Solutions of Eqs. 3.24 and 3.25 for a range of values of θ are plotted in Fig. 4 to assist in solving Eq. 3.26 by trial and error. After the value of θ has been determined, values of X, y, a, b_n, etc., can be found by trigonometry.

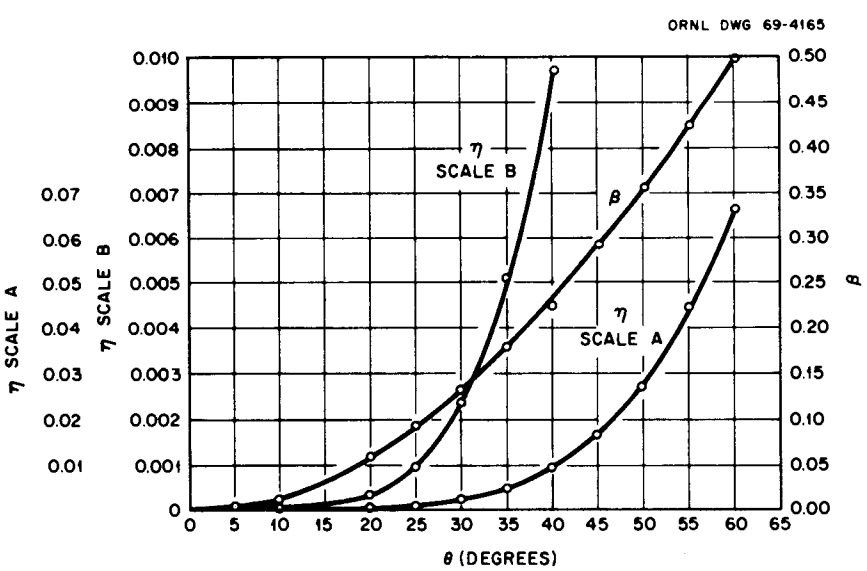

Fig. 4. Solutions of Eqs. 3.24 and 3.25 for Range of Values of θ.

With the value of θ determined, the moment of inertia of the section resisting bending must be determined.

$$I = 2\int_{o}^{a} X^2 y dX + A\Sigma\bar{b}^2 \ . \tag{3.27}$$

Substituting,

$$I = 2\int_{o}^{\theta} r^2(\cos\phi - \cos\theta)^2 r \sin\phi(-r\sin\phi)d\phi + A\Sigma\bar{b}^2 \ .$$

Expanding, integrating, and substituting limits,

$$I = 2r^4\left[\frac{\theta}{8} - \frac{\sin 4\theta}{32} - \frac{2\cos\theta\sin^3\theta}{3} + \cos^2\theta\left(\frac{\theta}{2} - \frac{\sin 2\theta}{4}\right)\right] + A\Sigma\bar{b}^2 \tag{3.28}$$

The bending stress in the most distant bolt from the neutral axis

$$S_B = \frac{M\bar{b}_n}{I} = \frac{PZ\bar{b}_n}{I} \ . \tag{3.29}$$

The direct tensile stress distributed equally in all bolts

$$S_T = \frac{2W}{N_T A} \ . \tag{3.30}$$

The maximum normal stress

$$S_n = S_B + S_T \ . \tag{3.31}$$

Neglecting friction, the shearing stress distributed equally in all bolts

$$S_s = \frac{11.18W}{N_T A} \ . \tag{3.32}$$

From Mohr's Circle of Stress, the maximum stress in the most stressed bolt

$$S_{max} = \frac{S_n}{2} + \left[\left(\frac{S_n}{2}\right)^2 + S_s^{\,2}\right]^{1/2} \ . \tag{3.33}$$

In summary, a circular bolted tie-down may be evaluated by

1. determining the value of θ by trial and error solution of Eq. 3.26 using Fig. 4 as an aid;
2. determining by trigonometry the linear dimension "a" and all of the "b" dimensions;
3. solving for the moment of inertia by using Eq. 3.28; and
4. computing the stresses

   S_B' from Eq. 3.29,

   S_T from Eq. 3.30,

S_n from Eq. 3.31,

S_s from Eq. 3.32, and

S_{max} from Eq. 3.33.

The maximum stress, S_{max}, in the most stressed bolt must be equal to or less than the yield stress of the bolt material.

4. TENSION MEMBER TIE-DOWN

Securing a cask to the transporting vehicle is often accomplished by tying it down with tension members. There are many tying systems, and the details of these systems vary over such a wide range that a discussion of each of them is beyond the scope of this document. Therefore, only the most frequently used systems are treated here. These are the four-member system and the two-member or loggers' tie. The analysis methods developed for these systems are general in nature but necessarily valid only for the specific systems defined.

Four-Member Tie-Down

The four-member system illustrated in Fig. 5 is probably the most frequently used method of cask tie-down. In general, the system consists

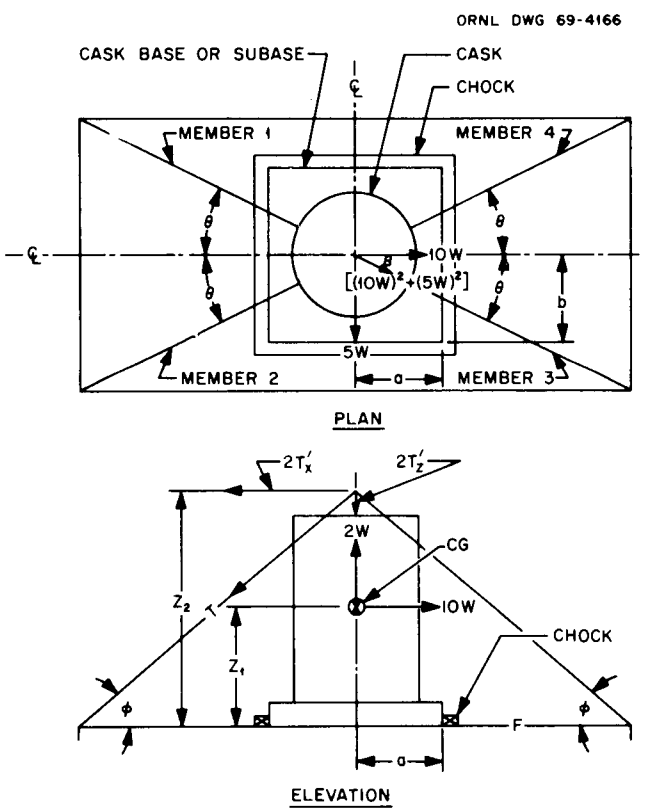

Fig. 5. Four-Member Tie-Down.

of four members capable of carrying significant loads in tension only that are secured to the cask and vehicle bed at angles. The members may be cables, chains, or rigid rods. Good practice dictates the use of chocks, very small casks notwithstanding, to reinforce the frictional force at the junction of the cask or subbase and the bed of the vehicle.

To analyze the four-member system and determine the stresses in the members, a detailed force analysis must be made. This is most easily accomplished by considering the component loads (10W, 5W, and 2W) individually and superimposing the results. The dimensional and directional notation used in these calculations is as shown in Fig. 5, and the other terms are defined as follows.

W = weight of cask, lb,

T_x = tensile force in members 1 and 2 resulting from 10W load, lb,

T_y = tensile force in members 1 and 4 resulting from 5W load, lb,

T_z = tensile force in each member resulting from 2W load, lb,

$T_{1,2,3,4}$ = total tensile force in subscripted member, lb,

F_x = total force in the x direction resulting from 10W load, lb,

F_y = total force in the y direction resulting from 5W load, lb.

Considering only the 10W load, in the x direction, and summing moments about the axis x = a,

$$\Sigma M = 0 \quad \text{with } \circlearrowright + .$$

$$10WZ_1 - 2Z_2T_x(\cos\theta - \cos\phi) - 2aT_x(\cos\theta \sin\phi) = 0 .$$

Solving for T_x,

$$T_x = \frac{5WZ_1}{Z_2(\cos\theta \cos\phi) + a(\cos\theta \sin\phi)} \tag{4.1}$$

Similarly, considering only the 5W load in the y direction and summing moments about the axis y = b,

$$\Sigma M = 0 \quad \text{with } \circlearrowright + .$$

$$5WZ_1 - 2Z_2T_y(\sin\theta \cos\phi) - 2bT_y(\sin\theta \sin\phi) = 0 .$$

Solving for T_y,

$$T_y = \frac{2.5WZ_1}{Z_2(\sin\theta\cos\phi) + b(\sin\theta\sin\phi)} \quad . \tag{4.2}$$

Considering only the 2W net load in the Z direction and summing vertical forces,

$$\Sigma F_{vert.} = 0 \quad \text{with} \uparrow + \ .$$

$$2W - 4T_z(\sin\phi) = 0 \ .$$

Solving for T_z,

$$T_z = \frac{W}{2\sin\phi} \ . \tag{4.3}$$

The force in the most loaded member, which is member 1 in this case,

$$T_{max} = T_x + T_y + T_z + T_i \ , \tag{4.4}$$

where T_i is the initial member tension that must be estimated or measured. Except for its effect on the member, T_i will be neglected. It is noted that T_{max} can be in any member since the regulations do not specify the directions of the forces but only the line of action.

Summing horizontal forces in the x direction,

$$\Sigma F_{hx} = 0 \quad \text{with} \rightarrow + \ .$$

$$10W - F_x - 2T_x(\cos\theta\cos\phi) = 0 \ .$$

Solving for F_x,

$$F_x = 10W - 2T_x(\cos\theta\cos\phi) \ . \tag{4.5}$$

Similarly, summing the horizontal forces in the y direction,

$$\Sigma F_{hy} = 0 \quad \text{with} \downarrow + \ .$$

$$5W - F_y - 2T_y(\sin\theta\cos\phi) = 0 \ .$$

Solving for F_y,

$$F_y = 5W - 2T_y(\sin\theta\cos\phi) \ . \tag{4.6}$$

The forces F_x and F_y are composed of a frictional component and the resistance of the chock. The frictional component, F_f, is evaluated from the following relationship,

$$F_f = \mu F_n \ , \tag{4.7a}$$

where

μ = the coefficient of friction,

F_n = total force normal to the surfaces,

with $\downarrow +$ by summation of vertical forces.

$$F_n = 2T_x(\cos\theta \sin\phi) + 2T_y(\sin\theta \sin\phi) + 2W + 4T_z \sin\phi ,$$

but by Eq. 4.3,

$$2W + 4T_z \sin\phi = 0 .$$

Therefore,

$$F_n = 2 \sin\phi(T_x \cos\theta + T_y \sin\theta) \qquad (4.7b)$$

and

$$F_f = 2\mu \sin\phi(T_x \cos\theta + T_y \sin\theta) . \qquad (4.7)$$

To be conservative, it is recommended that the value of μ be taken as

0.15 for a metal cask or skid on a metal vehicle bed if the vehicle is enclosed or weather tight to such an extent that the bed is not likely to become wet,

0.05 for a metal cask or skid on a metal bed in open vehicles, and

0.20 for a metal cask or skid on a wood bed.

The direction of impending motion and the direction of F_f is the direction of the vectorial resultant of the 10W and 5W loads as measured from the x axis as an angle β.

$$\beta = \tan^{-1} \frac{5}{10} = 26.6° .$$

The loads applied to the chocks, F'_x and F'_y, may be evaluated from the expressions

$$F'_x = F_x - F_{fx} \qquad (4.8a)$$

and

$$F'_y = F_y - F_{fy} . \qquad (4.8b)$$

Equation 4.8a becomes

$$F'_x = F_x - (\cos\beta)F_f \qquad (4.9)$$

or

$$F'_x = F_x - 0.894F_f .$$

Similarly, in the y direction Eq. 4.8b becomes

$$F'_y = F_y - (\sin \beta)F_f \tag{4.10}$$

or

$$F'_y = F_y - 0.4478F_f \ .$$

The force analysis for the four-member tie-down is now complete and the stresses in the members of the system can be determined.

The Loggers' Tie

The loggers' tie illustrated in Fig. 6 has been used for many years to secure objects to vehicle beds. This scheme of tie-down generally requires no specifically designed apparatus and can be applied to most vehicle beds and casks. However, difficulties may be encountered in obtaining commercially available members with adequate capacities to secure large casks by this method, but adequate tie-downs of small and moderately sized casks can be effected economically. Good practice dictates that chocks be used to reinforce the frictional force at the junction of the cask base or subbase and the bed of the transporting vehicle.

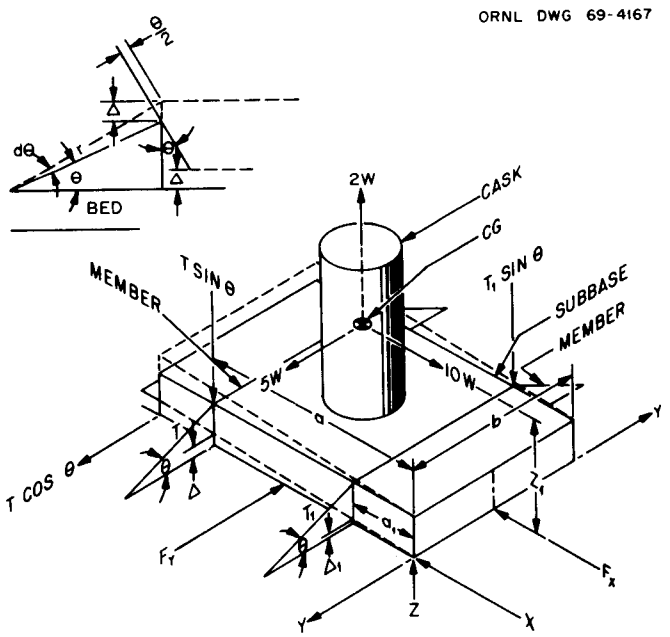

Fig. 6. The Loggers' Tie.

Generally, the members used to effect the loggers' tie are of some flexible material such as wire rope or chain. Any number of members can be used, but normally only one or two are encountered, and it is not necessary that the tie-down be symmetrical, but it usually is. The need for equations to analyze multimember nonsymmetrical systems is not anticipated. The equations will therefore be based on the assumptions that the system consists of one or two members and is symmetrical.

The magnitude of the external forces acting on the cask must be determined before the stresses in the members can be evaluated. This is most easily accomplished by considering the component loads (10W, 5W, and 2W) individually and superimposing the results. The notations used in the computations are defined as follows.

W = weight of the cask, lb,

T_1 = the tensile force in the least loaded (front) member, lb,

T = the tensile force in the most loaded (rear) member, lb,

T_x = the tensile force in the most loaded (rear) member resulting from the 10W load, lb,

T_y = the tensile force in the members resulting from the 5W load, lb,

T_z = the tensile force in the members resulting from the 2W load, lb,

Δ = the separation of the subbase and vehicle bed at the rear member resulting from the 10W load, in.,

Δ_1 = the separation of the subbase and vehicle bed at the front member resulting from the 10W load, in.

It is noted that the tensile forces T, T_x, T_y, and T_z do not include the initial tension.

Assuming that the cask subbase and the bed of the vehicle are rigid,

$$T = \frac{2\Delta AE}{L \sin \theta} , \tag{4.11}$$

and

$$T_1 = \frac{2\Delta_1 AE}{L \sin \theta} , \tag{4.11a}$$

where

A = area of the member, in.^{2},

E = modulus of elasticity,

L = total length of member, in.

$$\frac{\Delta}{a} = \frac{\Delta_1}{a_1} ,$$

and

$$\Delta_1 = \frac{a_1 \Delta}{a} .$$

Therefore,

$$T_1 = \frac{a_1 T}{a} . \tag{4.12}$$

Considering only the 10W load and taking moments about the y axis,

$$10WZ_1 - \frac{2a_1^2 T_x (\sin \theta)}{a} - 2aT_x (\sin \theta) = 0 ,$$

$$T_x = \frac{5WZ_1}{\sin \theta \left(\frac{a_1^2}{a} + a \right)} . \tag{4.13}$$

Considering only the 5W load and taking moments about the x axis,

$$5WZ - 2bT_y (\sin \theta) ,$$

$$T_y = \frac{2.5WZ}{b(\sin \theta)} . \tag{4.14}$$

Considering only the 2W vertical load and summing vertical forces,

$$2W - 4T_z (\sin \theta) = 0 ,$$

$$T_z = \frac{W}{2 \sin \theta} . \tag{4.15}$$

The tensile force in the most loaded (rear) member

$$T = T_x + T_y + T_z , \tag{4.16}$$

and the tensile force in the least loaded (front) member

$$T_1 = \frac{a_1}{a} T_x + T_y + T_z . \tag{4.17}$$

Summing the forces in the x direction with $\rightarrow +$,

$$10W - F_x = 0 ,$$

$$F_x = 10W; \tag{4.18}$$

and summing the forces in the y direction,

$$F_y = 5W . \tag{4.19}$$

The forces F_y and F_x are comprised of the frictional force at the junction of the cask base or subbase and the bed of the vehicle and the resistance of the chocks. The frictional force, F_f, has a direction as measured from the x axis of

$$\beta = \tan^{-1} \frac{5}{10} = 26.6° .$$

The frictional force

$$F_f = \mu N = \mu(2T_t \sin \theta + 2T_t' \sin \theta) , \tag{4.20}$$

where

N = the normal force, lb,

T_t, T_t' = forces in members including the initial or installation tension in the members, lb,

μ = coefficient of friction whose values are the same as defined for the four-member system.

The initial or installation tension in the members must be estimated or measured, and this value must be added to the tensile forces T and T_1. If the expression

$$F_f \geq 11.18 \text{ W} \tag{4.21}$$

is satisfied, chocks are not required. However, this is not easily accomplished for anything but small casks, and chocks are generally used to reinforce this frictional force.

Use of Chocks

Frequently, it is not practical to develop a frictional force between the cask base and the vehicle bed that is of significant magnitude to prevent motion of the cask relative to the bed, or stated mathematically,

$$F_x > 0.894\ F_f \text{ (see Eq. 4.9)}$$

$$F_y > 0.478\ F_f \text{ (see Eq. 4.10)} .$$

When this is the case, chocks are used to resist the impending motion. Chocks may be welded, bolted, or nailed to the bed of the vehicle, as illustrated in Fig. 7. The method of attachment must resist loads in the

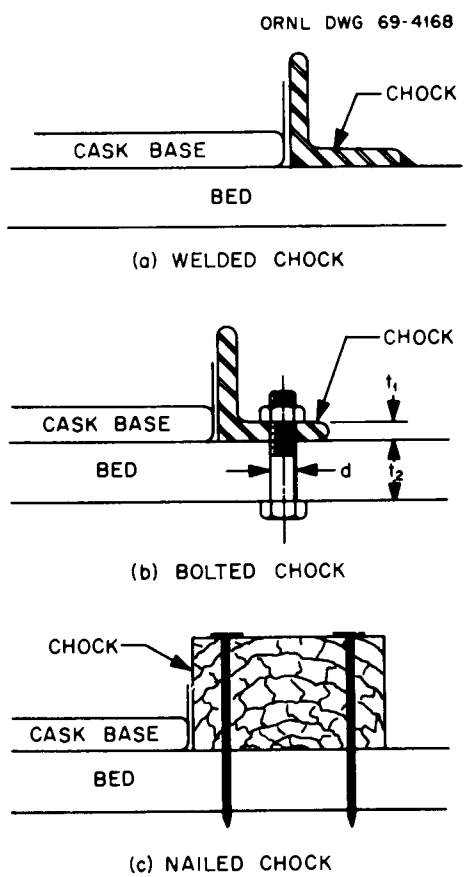

Fig. 7. Methods of Securing Chocks to Vehicle Bed.

x direction of

$$F'_x = F_x - 0.894F_f \tag{4.9}$$

and in the y direction of

$$F'_y = F_y - 0.478F_f \ . \tag{4.10}$$

In a properly designed system the attachment is free from significant bending stresses. The limiting stress is shear at the level of attachment. When the chock is welded to the vehicle bed from both sides, as shown in Fig. 7(a), it is only necessary to satisfy Eq. 4.22 in the x direction,

$$F'_x \leq \text{(shear yield stress of weld)(shear area of weld)}, \tag{4.22}$$

and Eq. 4.23 in the y direction,

$$F'_y \leq \text{(shear yield stress of weld)(shear area of weld)}, \tag{4.23}$$

where the shear yield stress of the weld may be taken as 0.55 times the tensile yield.

The bolted chock, as illustrated in Fig. 7(b), must have sufficient bolt area, A_B, to resist the shearing forces F'_x and F'_y.

$$F'_x \leq A_{B_x} \text{ (shear yield stress of bolts)}$$
$$= \frac{N_x \pi d^2}{4} \text{ (shear yield stress of bolts)} \tag{4.24}$$

and

$$F'_y \leq A_{B_y} \text{ (shear yield stress of bolts)}$$
$$= \frac{N_y \pi d^2}{4} \text{ (shear yield stress of bolts)}, \tag{4.25}$$

where N_x and N_y are the number of bolts associated with the x and y directions, respectively, and the shear yield stress of the bolts may be taken as 0.55 times the tensile yield. There also must be sufficient bearing areas to satisfy the following expressions.

$$F'_x \leq N_x(t_1 d)_x \text{ (compressive yield stress of chock material)}, \tag{4.26}$$

$$F'_y \leq N_y(t_1 d)_y \text{ (compressive yield stress of chock material)}, \tag{4.27}$$

$$F'_x \leq N_x(t_2 d)_x \text{ (compressive yield stress of bed material)}, \tag{4.28}$$

$$F'_y \leq N_y(t_2 d)_y \text{ (compressive yield stress of bed material)}, \tag{4.29}$$

where T_1, t_2, and d are as shown in Fig. 7.

A wooden chock nailed to a wooden bed of a vehicle is probably the most frequently encountered and least easily calculable type of chock arrangement used. If nails long enough to either penetrate the vehicle bed completely or to penetrate it a distance of 2 in. are used, if no splitting is detectable, and if Eqs. 4.30 and 4.31 are satisfied,[3] this type of chock attachment conforms to the regulations.

$$F'_x \leq N_{nx} \; KD^{3/2} \tag{4.30}$$

and

$$F'_y \leq N_{ny} \; KD^{3/2} \; , \tag{4.31}$$

where

N_{nx} = number of nails in x direction,

N_{ny} = number of nails in y direction,

K = allowable lateral load constant for nails in different types of wood given in Table 1,

D = diameter of nail given in Table 2.

When chocks are used with tension member tie-downs to reinforce the frictional force between the cask base and the vehicle bed, the following expressions must be satisfied to complete the force analysis necessary to determine the stresses in the members.

$$F_x \geq F'_x - (\cos \beta)F_f \tag{4.32}$$

and

$$F_y \geq F'_y - (\sin \beta)F_f \; , \tag{4.33}$$

where

F'_x = load capacity of the chocks in the x direction evaluated by using Eqs. 4.22, 4.24, and 4.30;

F'_y = load capacity of the chocks in the y direction evaluated by using Eqs. 4.23, 4.25, and 4.31.

With these expressions satisfied, the stresses in the members of the system can be determined.

Table 1. Allowable Lateral Load Constant for Nails in Different Species of Wood (from Ref. 3)

Hardwoods		Softwoods	
Species	K for nails[a]	Species	K for nails[a]
Ash		Tupelo	
Black	1250	Black	1250
Commercial White	1700	Water	1250
Aspen		Yellow Poplar	900
Bigtooth	900	Baldeypress	1125
Quaking	900	Cedar	
Basswood, American	900	Alaska	1125
Beech, American	1700	Atlantic White	900
Birch		Northern White	900
Sweet	1700	Port-Orford	1125
Yellow	1700	Western Redcedar	900
Chestnut, American	900	Douglas Fir	
Cottonwood		Coast Type	1375
Black	900	Rocky Mountain	1125
Eastern	900	Fir	
Elm		Balsam	900
American	1250	Commercial White	900
Rock	1700	Hemlock	
Slippery	1250	Eastern	900
Hackberry	1250	Western	1125
Hickory		Larch, Western	1375
Pecan	1700	Pine	
True	1700	Eastern White	900
Magnolia, Southern	1250	Lodgepole	900
Maple		Ponderosa	900
Black	1700	Red	1125
Red	1250	Southern Yellow	1375
Silver	1250	Sugar	900
Sugar	1700	Western White	900
Oak		Redwood (old growth)	1125
Commercial Red	1700	Spruce	
Commercial White	1700	Englemann	900
Sweetgum	1250	Red	900
Sycamore, American	1250	Sitka	900
		White	900

[a]Driven perpendicular to the grain of the wood and loaded either parallel or perpendicular to the grain.

Table 2. Sizes of Bright, Common Wire Nails (from Ref. 3)

Penny	Gage	Length (in.)	Diameter (in.)	$D^{3/2}$ (in.)
2d	15	1	0.072	0.0193
4d	12.5	1.5	0.098	0.0307
6d	11.5	2	0.113	0.0380
8d	10.25	2.5	0.131	0.0474
10d	9	3	0.148	0.0570
12d	9	3.25	0.148	0.0570
16d	8	3.5	0.162	0.0652
20d	6	4	0.192	0.0841
30d	5	4.5	0.207	0.0942
40d	4	5	0.225	0.1068
50d	3	5.5	0.244	0.1205
60d	2	6	0.262	0.1342

Stresses in Members

In general, the members of the attachment system may be any two force members such as wire rope, chains, rigid bars and rods, etc. Good design practice generally dictates that the forces be applied axially. Therefore, the only significant stress is a tensile stress resulting from the force T_{max}. There are cases where bending will be present, and these must be considered.

If the member is a rigid rod or bar with an axial load, Eq. 4.34 must be satisfied for compliance with the regulations.

$$\text{Yield stress} \geq S = \frac{T_{max}}{A} \quad . \tag{4.34}$$

Caution must be exercised if the member is rod with threaded ends or is otherwise weakened for attachment to the cask or vehicle, and the net area of the rod must be used for A in Eq. 4.34. For members with threaded ends that are of ductile materials (ultimate stress of less than 100,000 psi), the net area of the threaded portion of the rod may be evaluated by using the expression[4]

$$A = 0.785 \left(OD - \frac{0.9743}{n}\right)^2 , \tag{4.35}$$

where

OD = the outside diameter of the thread, in.,

n = the number of threads per inch.

For members with threaded ends that are of materials with an ultimate stress in excess of 100,000 psi, the net area of the threaded portion of the rod may be evaluated by using the expression[4]

$$A = \pi\left(\frac{PD}{2} - \frac{0.1638}{n}\right)^2 , \qquad (4.36)$$

where PD = the thread pitch diameter.

If a rigid member of high-strength material is used, care must be exercised to evaluate the effect of stress concentrations. When the loads are not applied axially, the bending stresses resulting from the eccentricity, e, must be considered, and Eq. 4.37 must be satisfied for compliance with the regulations.

$$\text{Yield stress} \geq = \frac{T_{max}}{A} + \frac{T_{max}e}{I} \quad . \qquad (4.37)$$

The most frequently used member material is wire rope or cable. Use of this type member requires some interpretation of the regulations since wire rope does not have a yield point and the materials normally encountered (plow steel and improved plow steel) do not have a well-defined yield point. The ultimate elongation of these materials is only 1%, and the yield stress and ultimate stress are very nearly equal. The manufacturers of wire rope generally publish values for "breaking strength" and "safe working load" for their products. However, it is a violation of the intent of the regulations to use the breaking strength as the design criterion, and use of the safe working load and its factor of safety of 5 represents poor economy. It is therefore recommended that the yield strength for cable be established as 80% of the breaking strength, T_B. For a straight cable with no bends or attachment concentrations, Eq. 4.38 must be satisfied.

$$T_{max} \leq 0.8T_B \ . \qquad (4.38)$$

Frequently, it is not convenient to install a cable without bends. The cable is often looped around the cask or otherwise bent around a radius. This practice causes bending stresses in the cable, and a reduction in the capacity of the cable must be made. Equation 4.39a is valid for the bending in an individual wire of a cable.

$$S = \frac{Mc}{I} = \frac{M}{I}\left(\frac{d}{2}\right) \quad , \tag{4.39a}$$

where d = the diameter of the individual wire. If this wire is bent around a radius, r, the expression

$$\frac{1}{r} = \frac{M}{EI} \tag{4.39b}$$

is also valid and can be rearranged in the form

$$\frac{M}{I} = \frac{E}{r} \quad . \tag{4.39c}$$

Equation 4.39a then becomes

$$S = \frac{Ed}{2r} \quad , \tag{4.39d}$$

and the corresponding reduction in tensile load capacity

$$\Delta T = SA = \frac{Ed}{2r}\left(\frac{\pi d^2 n}{4}\right) = \frac{\pi E d^3 n}{8r} \quad , \tag{4.39}$$

where n = the number of wires or strands in the cable. To ensure compliance for a bent cable, Eq. 4.38 may be rewritten

$$T_{max} \leq 0.8 \left(T_B - \frac{\pi E d^3 n}{8r}\right) \quad . \tag{4.40}$$

Chain has been used successfully to secure loads to vehicles for many years, and it has many advantages such as ease of installation, utility, and availability. As illustrated in Fig. 8, an analysis[5] of a link of "average" proportions reveals a maximum compressive stress at the inside radius of

$$\text{Max } S_c = -\ 4.2\ \frac{T_{max}}{A}$$

and a maximum tensile stress at the outer radius of

$$\text{Max } S_T = 2\ \frac{T_{max}}{A} \quad .$$

ORNL DWG 69-4169

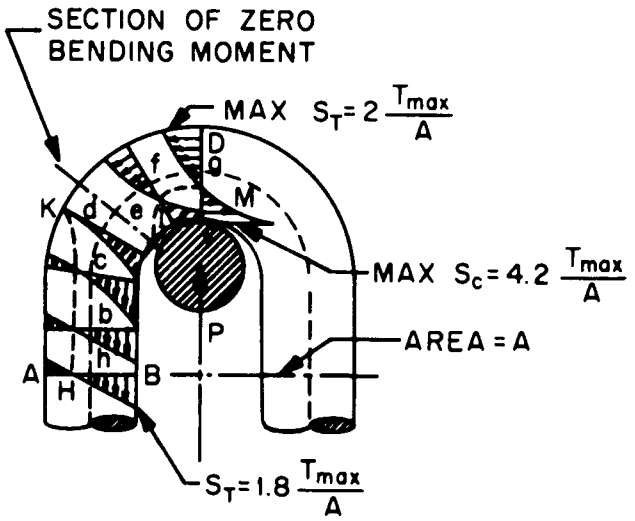

Fig. 8. Stress Analysis of a Chain Link of "Average" Proportions. (from Ref. 5)

If compliance is based on the maximum compressive stress or the

$$\text{Yield stress} \geq \text{Max } S_c = -4.2\,\frac{T_{max}}{A}\ , \qquad (4.41)$$

a chain system with excess capacity will result even though a literal interpretation of the regulations would require such. This stress is highly localized, and a more realistic situation is expressed as

$$\text{Yield stress} \geq \text{Max } S_T = 2\,\frac{T_{max}}{A}\ . \qquad (4.42)$$

Difficulty will frequently be encountered in determining the yield stress of chain material since manufacturers generally publish only the values for the "safe working load," "proof load," and "ultimate or breaking load" of the chain. When this is the case, a value of

$$T_{max} \leq 2.5(\text{safe working load})$$

will insure compliance with the regulations.

Frequently, commercial fittings such as shackles, turnbuckles, connecting links, hooks, etc., are used in conjunction with the rods, cables, and chains to make up the tension member. These items have complex geometries, and an analysis of each fitting would be laborious

and unnecessary. Where the material of the fitting is unknown but where the item is made by a reputable manufacturer, a load of

$$T_{max} \leq 2.5(\text{safe working load})$$

is adequate to insure compliance with regulations. Where the material is known and the ultimate load is given, the less conservative expression

$$T_{max} \leq \frac{\text{yield stress}}{\text{ultimate stress}} (\text{ultimate load}) \qquad (4.43)$$

will insure compliance with the regulations.

Member Attachment Methods

There are numerous acceptable methods by which tie-down members may be secured to the cask and vehicle bed, but to a certain extent, each cask and vehicle presents a unique problem. Some general schemes that appear promising are illustrated in Figs. 9 and 10. Attachments that are

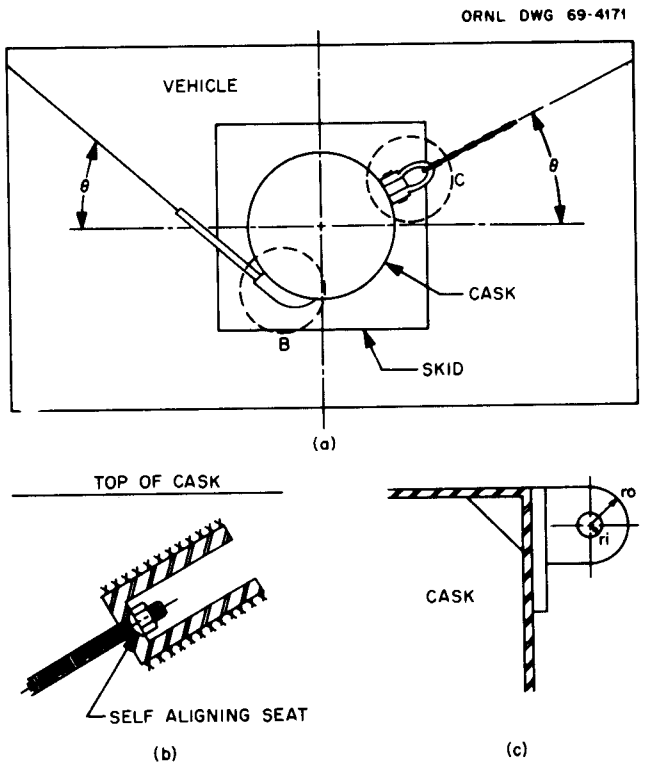

Fig. 9. Methods of Attaching Tie-Down Members to Cask Using Lugs Welded Directly to the Cask.

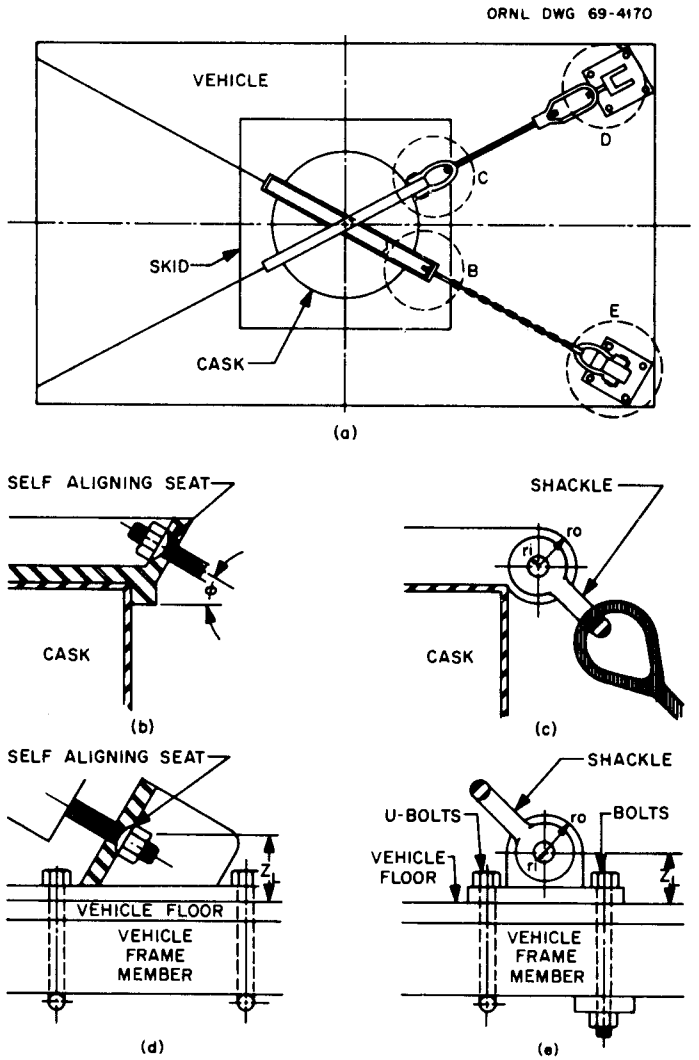

Fig. 10. Different Schemes for Attaching Tie-Down Members to Cask and Vehicle Bed.

independent of the cask, such as those shown in Fig. 11, are potentially superior during the free fall accident because it is unlikely that a highly concentrated load attributable to the tie-down would result from the impact. Attachment lugs welded directly to the cask, as shown in Fig. 10, will on impact effect a highly concentrated load that could result in shell rupture for lead-shielded casks. However, there are instances when a lug of this type is desirable, and acceptable designs for the use of such a lug can be made by exercising caution to assure that the loads are distributed over a sufficient area or that the lug will collapse on impact.

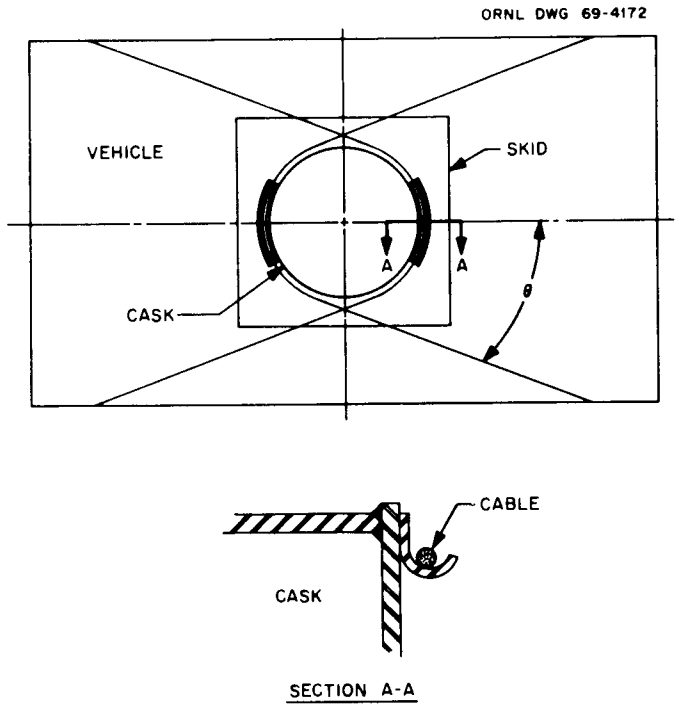

Fig. 11. Tie-Down Members Secured to Cask With Attachments Independent of the Cask.

It is recognized that there are many acceptable member attachment schemes, some of which would require a significant amount of analytical work to verify. It is not the intent of this document to establish analytical procedures to cover all of these cases but to assist in evaluating some of the more common cases, such as determining the stress in lugs, in bolts securing lugs, and in chocks.

Lugs

A rigorous curved beam analysis to determine the maximum stress in a lug such as shown in Figs. 9(c), 10(c), and 10(d), is quite involved. A satisfactory design would be indicated if the expression[6] for the maximum stress in the radius portion of the lug given in Eq. 4.44 were satisfied and the combined bending, tensile, and shearing stresses in the lug and weld or beam are in the acceptable range (less than the yield stress of the lug material).

$$\text{Yield stress} \geq S_{max} = \frac{3.75T_{max}}{r_o t} , \tag{4.44}$$

where

r_o = the outside radius of the lug, in.,

t = thickness of the lug, in.

Equation 4.44 is valid for

$$4 \geq \frac{r_o}{r_i} \geq 2 ,$$

where r_i = the inside radius of the lug, in.

Bolts Securing Lugs

The bolts securing lugs, such as illustrated in Fig. 10(d) and 10(e) to vehicle beds should be investigated by using Eq. 3.6 to locate the neutral axis of the lug. Equation 3.10 is modified to reflect a different load and becomes

$$S_T = \frac{(T \cos \phi) Z_L b_n}{A\Sigma b^2 + \left(\frac{LE_w a^3}{E_T^3}\right)} , \tag{4.45}$$

where the terms are as defined for Eq. 3.10.

The direct tensile stress

$$S'_T = \frac{T \sin \phi}{N_B A_B} , \tag{4.46}$$

where

N_B = the number of bolts,

A_B = the area of one bolt, in.^{2},

and the shearing stress

$$S_s = \frac{T \cos \phi}{N_B A_B} . \tag{4.47}$$

Satisfaction of Eq. 4.48 demonstrates that the bolts conform to the requirements of the regulations.

$$\text{Yield stress} \geq S_{max} = \frac{S_T + S'_T}{2} \left[\left(\frac{S_T + S'_T}{2} \right)^2 + S_s^{\,2} \right]^{1/2} . \tag{4.48}$$

REFERENCES

1. United States Atomic Energy Commission AEC Manual, Volume 0000, General Administration, Part 0500, Health and Safety, Chapter 0529, Safety Standards for the Packaging of Radioactive or Fissile Materials, August 22, 1966.

2. Code of Federal Regulations, Title 10, Part 71, Transport of Licensed Materials, see also Federal Register, Vol. 31, pp. 9941-9949, July 1966.

3. Wood's Handbook, U. S. Department of Agriculture Handbook No. 72, pp. 167-173.

4. E. Oberg and F. D. Jones, p. 1051 in Machinery's Handbook, The Industrial Press, New York, 17th ed.

5. F. Seely and J. O. Smith, pp. 185-186 in Advanced Mechanics of Materials, John Wiley and Sons, Inc., New York, 2nd ed.

6. S. Timoshenko, p. 383 in Strength of Materials, Part I, Elementary Theory and Problems, D. Von Nostrand Company, Inc., Princeton, New Jersey, 3rd ed.

NOMENCLATURE

A = cross-sectional area of one bolt or area of member, in.^{2}

a = linear dimension, in.

b = linear dimension or distance from neutral axis to any bolt, in.

b_n = distance from neutral axis to most distant bolt, in.

D = diameter of nail, in.

d = diameter of bolt, in.

E = modulus of elasticity, lb/in.^{2}

E_T = modulus of elasticity of material T, lb/in.^{2}

E_w = modulus of elasticity of material w, lb/in.^{2}

e = eccentricity

F_B = force in any bolt, lb

F_n = total force normal to surface, lb

F_x = total force in x direction resulting from 10W load, lb

F_x' = load capacity of chocks in the x direction, lb

F_y = total force in the y direction resulting from 5W load, lb

F_y' = load capacity of chocks in the y direction, lb

I = moment of inertia, in.^{4}

K = allowable lateral load constant for nails in wood,

L = length of frame or total length of member, in.

M = moment, in.-lb

N = number

n = number

P = force resultant, lb

r = radius, in.

r_i = inside radius of lug, in.

r_o = outside radius of lug, in.

S = stress, psi

S_B = bending stress, psi

S_B' = flexural stress in any bolt, psi

S_c = compressive stress, psi

S_D = direct tensile stress in bolts, psi

S_n = normal stress in the most distant bolt from the neutral axis, psi

S_s = shearing stress, psi

S_T = direct tensile stress, psi

S_w' = compressive stress in the "strip", psi

T = tensile force, lb

$T_{1,2,3,4}$ = total tensile force in subscripted member, lb

T_B = breaking strength, lb

T_i = initial tension in member, lb

T_x = tensile force in members resulting from 10W load, lb

T_y = tensile force in members resulting from 5W load, lb

T_z = tensile force in members resulting from 2W load, lb

t = thickness, in.

W = weight, lb

x = linear dimension or direction, in.

y = linear dimension or direction, in.

Z = linear dimension or direction, in.

α = angle

β = direction of frictional force measured from x axis, °

Δ = separation of subbase and vehicle bed at rear member resulting from 10W load, in.

Δ_1 = separation of subbase and vehicle bed at front member resulting from 10W load,

ϵ_T = maximum strain in material T, in./in.

ϵ_T' = strain in material T at any point, in./in.

ϵ_w = maximum strain in material w, in./in.

ϵ_w' = strain in material w at any point, in./in.

η = a function

θ = angle

μ = coefficient of friction

ϕ = angle

Internal Distribution

1. T. A. Arehart
2. M. Bender
3. C. E. Bettis
4. R. E. Blanco
5. R. E. Brooksbank
6. K. B. Brown
7. F. R. Bruce
8. J. R. Buchanan
9. C. D. Cagle
10. D. D. Cannon
11. G. B. Child
12. F. L. Culler, Jr.
13. F. C. Davis
14. R. L. Donahue
15. H. G. Duggan
16-20. J. H. Evans
21. D. E. Ferguson
22. W. F. Ferguson
23. F. C. Fitzpatrick
24. W. R. Gall
25. J. H. Gillette
26. H. E. Goeller
27. K. W. Haff
28. R. L. Jolley
29. O. A. Kelley
30. E. M. King
31. B. B. Klima
32. A. J. Mallett(K-25)
33. J. R. McGuffey
34. J. D. McLendon (Y-12)
35. H. A. Nelms
36. J. P. Nichols
37. W. A. Pate
38. R. Salmon
39. W. F. Schaffer
40. R. D. Seagren
41. L. B. Shappert
42. W. C. Stoddart
43. D. A. Sundberg
44. W. E. Unger
45. H. K. Walker
46. D. C. Watkin
47. M. E. Whatley
48. W. R. Winsbro
49. R. G. Wymer
50-51. Central Research Library
52. Document Reference Section
53. GE Division Library
54-63. Laboratory Records Department
64. Laboratory Records, ORNL R. C.
65. ORNL Patent Office

External Distribution

66. R. E. Alexander, Lord Manufacturing Company, 1635 West 12th Street, Erie, Pa.
67. R. F. Barker, AEC, Washington, D. C.
68. D. E. Beaderstadt, AEC, Chicago Operations Office 9800 South Cass Avenue, Argonne, Illinois 60439
69. W. G. Belter, AEC, Washington, D. C.
70. S. Bernstein, Union Carbide Corporation, Nuclear Division, Post Office Box 1410, Paducah, Kentucky 42001
71. W. A. Brobst, U. S. Department of Transportation, 6th and D Street SW, Washington, D. C. 20590

72. K. W. Broling, Brandon Equipment Company, 323 South Michigan Avenue, Chicago, Illinois

73. R. Burian, Battelle Memorial Institute, 505 King Avenue, Columbus, Ohio 43201

74. R. L. Chandler, AEC, Savannah River Operations Office, Post Office Box A, Aiken, South Carolina 29801

75. R. B. Chitwood, AEC, Division of Materials Licensing, Washington, D. C.

76. H. G. Clarke, Jr., The Franklin Institute Laboratories, Twentieth and Parkway, Philadelphia, Pennsylvania 19103

77. H. L. Cook, Jr., Ohmart Corporation, 4241 Allendorf Drive, Cincinnait, Ohio 45209

78. E. G. Cox, U. S. Department of Transportation, 6th and D Street SW, Washington, D. C. 20590

79. F. A. Dugan, Brookhaven National Laboratory, Upton, L. I., New York

80. C. S. Ehrman, Allied Chemical Corporation, Post Office Box 70, Morristown, New Jersey 07960

81. K. E. Elliott, AEC, Oak Ridge Operations Office, Post Office Box E, Oak Ridge, Tennessee 37830

82. T. C. George, Bureau of Explosives, 63 Vesey Street, New York, New York 10007

83. G. C. Gower, AEC, Chicago Operations Office, 9800 South Cass Avenue, Argonne, Illinois 60439

84. R. I. Jetter, Atomics International, Post Office Box 309 Canoga Park, California 91304

85. W. A. Johnson, AEC, Oak Ridge Operations, Post Office Box E, Oak Ridge, Tennessee 37830

86. W. P. Jones, Westinghouse Electric Corporation, Bettis Atomic Power Laboratory, Post Office Box 79, West Mifflin, Pennsylvania 15122

87. J. W. Langhaar, E. I. du Pont de Nemours and Company, Wilmington, Delaware 19898

88. J. A. Lenhard, AEC, Oak Ridge Operations Office, Post Office Box E, Oak Ridge, Tennessee 37830

89. E. C. Lusk, Battelle Memorial Institute, 505 King Avenue, Columbus, Ohio 43201

90. C. E. MacDonald, AEC, Division of Materials Licensing, Washington, D. C. 20545

91. J. S. Milau, Brookhaven National Laboratory, Upton, L. I., New York

92. W. A. Nelson, AEC, Washington, D. C.

93. D. E. Patterson, AEC, Washington, D. C.

94. R. W. Peterson, National Lead Company, Foot of West Street, Wilmington, Delaware 19898

95. W. A. Pryor, AEC, Oak Ridge Operations Office, Post Office Box E, Oak Ridge, Tennessee 37830

96. T. Ricci, Atomics International, Post Office Box 309, Canoga Park, California 91304

97. L. R. Shobe, Engineering Mechanics Department, The University of Tennessee, Knoxville, Tennessee 37916

98. J. A. Sisler, AEC, Washington, D. C.

99. C. W. Smith, General Electric Company, 283 Brokaw Road, Santa Clara, California 95050

100. F. H. Speckhart, Mechanical Engineering Department, The University of Tennessee, Knoxville, Tennessee 37916

101. F. J. Sweeney, Associated Transport, Inc., 380 Madison Avenue New York, New York 10017

102. R. J. Thompson, Stearns-Roger Corporation, Post Office Box 588, Denver, Colorado 80217

103. R. T. Waite, American Insurance Association, 85 John Street, New York, New York 10038

104. H. E. Walchli, Westinghouse Electric Corporation, Post Office Box 355, Pittsburgh, Pennsylvania 15230

105-119. Division of Technical Information Extension

120. Laboratory and University Division, AEC, ORO