ORNL
LIBRARY COPY

ORNL-4342
UC-25 – Metals, Ceramics, and Materials

DATE ENTERED FEB 7 - 1969

FABRICATION PROCEDURES FOR THE INITIAL HIGH FLUX ISOTOPE REACTOR FUEL ELEMENTS

OAK RIDGE NATIONAL LABORATORY
operated by
UNION CARBIDE CORPORATION
for the
U.S. ATOMIC ENERGY COMMISSION

Printed in the United States of America. Available from Clearinghouse for Federal Scientific and Technical Information, National Bureau of Standards, U.S. Department of Commerce, Springfield, Virginia 22151
Price: Printed Copy $3.00; Microfiche $0.65

LEGAL NOTICE

This report was prepared as an account of Government sponsored work. Neither the United States, nor the Commission, nor any person acting on behalf of the Commission:

A. Makes any warranty or representation, expressed or implied, with respect to the accuracy, completeness, or usefulness of the information contained in this report, or that the use of any information, apparatus, method, or process disclosed in this report may not infringe privately owned rights; or

B. Assumes any liabilities with respect to the use of, or for damages resulting from the use of any information, apparatus, method, or process disclosed in this report.

As used in the above, "person acting on behalf of the Commission" includes any employee or contractor of the Commission, or employee of such contractor, to the extent that such employee or contractor of the Commission, or employee of such contractor prepares, disseminates, or provides access to, any information pursuant to his employment or contract with the Commission, or his employment with such contractor.

ORNL-4342

Contract No. W-7405-eng-26

METALS AND CERAMICS DIVISION

FABRICATION PROCEDURES FOR THE INITIAL HIGH FLUX ISOTOPE REACTOR FUEL ELEMENTS

Compiled by G. M. Adamson, Jr.

FEBRUARY 1969

OAK RIDGE NATIONAL LABORATORY
Oak Ridge, Tennessee
operated by
UNION CARBIDE CORPORATION
for the
U.S. ATOMIC ENERGY COMMISSION

The following people were the principal contributors to the various subjects:

Core fabrication: W. J. Werner and J. P. Hammond

Plate fabrication: M. M. Martin, J. H. Erwin, and C. F. Leitten, Jr.

Assembly: J. W. Tackett, R. W. Knight, and G. M. Slaughter

Inspection: B. E. Foster, S. D. Snyder, K. K. Klindt, and J. H. Erwin

Machining: C. R. Rickard, J. W. Tackett, and R. W. Knight

CONTENTS

	Page
Abstract	1
Introduction	2
Description	3
Fuel Assembly	3
Fuel Plates	9
Requirements	9
Fuel Plates	12
Fuel Elements	14
Materials	15
Fissile Compound	15
Burnable Poison	16
Aluminum Cylinders	18
Aluminum Sheet and Plate	18
Aluminum Powder	19
Aluminum Welding Filler Metals	19
Fuel Plate Fabrication Procedures	19
Core Preparation	20
Powder Preparation and Weighing	20
Blending Procedure	23
Core Pressing	24
Vacuum Annealing of Pressed Compacts	26
Cladding and Rolling	27
Billet Assembly	27
Hot Roll Bonding	31
Softening Anneal	32
Cold Rolling	33
Fuel Plate Annealing	33
Fluoroscopic Examination and Marking	34
Plate Sizing	36
Fuel Plate Forming	38
Forming Equipment	39
Forming Procedures	41

Fuel Plate Inspection 43
Visual 43
Dimensional and Plate Curvature 44
Radiography — Fuel Core Outline 45
Core Hump Orientation 47
Ultrasonic Nonbond Detection 47
Fuel Core Homogeneity 49
Element Fabrication 51
Fuel Element Assembly 53
Fuel Plate Attachment (Type A) Welds 61
Welding 61
Postweld Inspection 69
Fuel Plate Spacing Measurements 70
Welding Quality Control Testing 71
Installation, Welding, and Inspection of Combs 72
Installation of End Adapters 75
Machining 76
Machining and Inspection of Components 77
Side Plates 77
Combs 86
Fuel Element Machining and Inspection 88
Weld Preparation 88
Final Machining and Dimensional Inspection 89
Accomplishments 93
Fuel Plate Recoveries 93
Uranium Content and Distribution 99
Boron Content and Distribution 100
Water Channel Spacing 103
Weld Quality 103
Final Dimensions 104
Conclusions 106
Acknowledgment 106
Appendix A: Engineering Drawings 115
Appendix B: Sample Inspection Reports 127

FABRICATION PROCEDURES FOR THE INITIAL HIGH FLUX ISOTOPE REACTOR FUEL ELEMENTS

Compiled by G. M. Adamson, Jr.

ABSTRACT

Procedures by which ORNL fabricated the first High Flux Isotope Reactor fuel assembly are described. Quality of starting materials, pressing of complex U_3O_8-aluminum-B_4C dispersion cores, rolling and forming of fuel plates, assembly and welding of fuel elements, inspections performed throughout the procedure, and quality of intermediate and final products are reported. An entire HFIR fuel loading comprises two elements, inner and outer annuli containing 171 and 369 fuel plates, respectively. The high neutron flux and heat production rate require nonlinear fuel loading variation across the plates, accurate shaping of plates, and fabrication to close tolerances. The cladding and structural alloy was 6061 aluminum.

INTRODUCTION

Oak Ridge National Laboratory designed and developed and is operating the High Flux Isotope Reactor. This flux-trap reactor uses a beryllium reflector, light water coolant and moderator, and U_3O_8 dispersed in aluminum as fuel. The main purpose of this advanced research reactor is to produce heavy transuranium isotopes for research.

The unique achievement of the HFIR is that it provides an unperturbed thermal neutron flux greater than 5×10^{15} neutrons cm^{-2} sec^{-1} at a design power of 100 Mw. This requires small core volume and a high ratio of heat transfer surface to volume. This was achieved by a cylindrical core with a high and uniform metal-to-water volume ratio (approx 1.0) and a radial variation in the distribution of fuel and

poison to minimize the variation in power density.[1] The purpose of this report is to present a set of fabrication procedures that have yielded satisfactory fuel elements. We do not claim that our process is the only one suitable for making such elements, but it is essentially that proven successful for commercial fabrication.[2] Also, we are not presenting the development that led to selection of the process; this is left for other reports.

These procedures were used to make two reactor cores and in part a third. A flow test core was made with depleted uranium to demonstrate fabrication procedures before their use on the actual elements for reactor operation, and it was used in preliminary reactor tests before nuclear operation. Fuel plates were made for the third critical experiment, but different procedures were used for assembly because the plates were not attached and the end fittings were different. This assembly was used in the Critical Experiments Facility and in the reactor at very low power with no forced circulation. The major product of these procedures was the first reactor fuel core, which was used successfully for 65 days at 20 Mw and 18.6 days at 50 Mw, for a total of 2230 Mwd. From reactor instrumentation and visual examination of the elements in the reactor pool after use, the operation appeared to be completely successful; no fuel element problems or unexpected changes were encountered. Subsequent elements similarly manufactured commercially[2] have performed well at 100 Mw.

The plate fabrication procedures were based upon those developed and demonstrated by ORNL for the fabrication of the first core loading for the pool reactor at the Puerto Rico Nuclear Center,[3] and similar

---

[1]F. T. Binford and E. N. Cramer, The High Flux Isotope Reactor. Volume I. Functional Description, ORNL-3572 (May 1964).

[2]R. W. Knight, J. Binns, and G. M. Adamson, Jr., Fabrication Procedures for Manufacturing High Flux Isotope Reactor Fuel Elements, ORNL-4242 (June 1968).

[3]W. J. Kucera, C. F. Leitten, Jr., and R. J. Beaver, Specifications and Procedures Used in Manufacturing U_3O_8-Aluminum Dispersion Fuel Elements for Core I of the Puerto Rico Research Reactor, ORNL-3458 (Oct. 7, 1963).

procedures were used in our simultaneous development for the Advanced Test Reactor.[4] The assembly and welding techniques were developed specifically for HFIR.

DESCRIPTION

Fuel Assembly

The HFIR core, illustrated schematically in Fig. 1, consists of a series of concentric annular regions. A central hole approximately 5 in. in diameter forms the flux trap, and the targets containing

[4]R. J. Beaver, G. M. Adamson, Jr., and P. Patriarca, Procedures for Fabricating Aluminum-Base ATR Fuel Elements, ORNL-3632 (June 1964).

ORNL-LR-DWG-65776

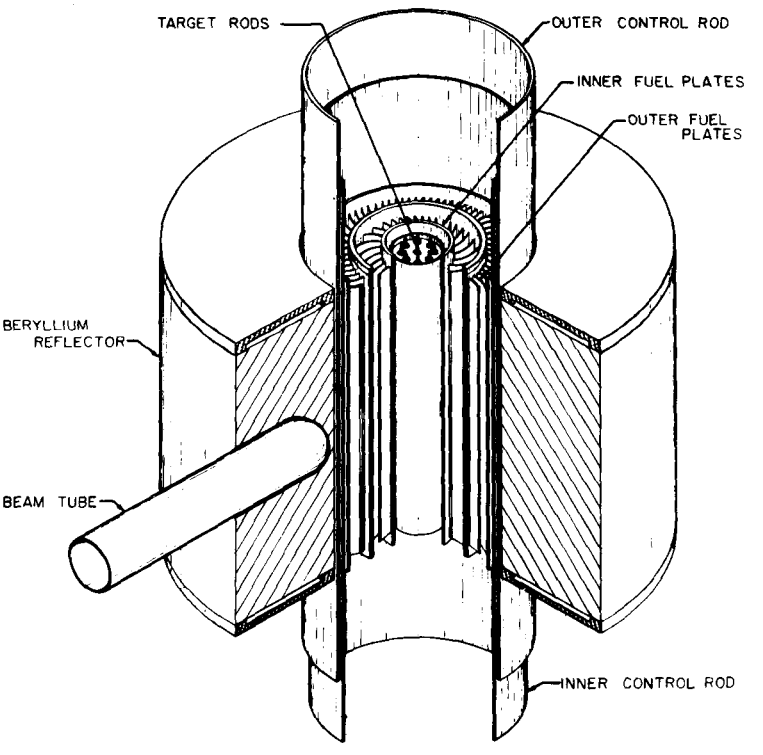

Fig. 1. Schematic Drawing of HFIR Core.

^{242}Pu and other transuranium isotopes are positioned within it. The fuel element surrounds the flux trap and is surrounded in turn by the control region, the removable reflector, and the permanent reflector.

The fuel region consists of two concentric fuel elements, Fig. 2. The inner one contains 171 fuel plates with a total of 2.6 kg of ^{235}U, and the outer contains 369 plates with 6.8 kg of ^{235}U. The inner element

Fig. 2. HFIR Fuel Elements.

extends from 5 to 10 1/2 in. and the outer from 11 1/4 to 17 1/8 in. in diameter.[1,5] The entire fuel assembly is 30 in. long with an active length of 20 in. The fuel plates are vertically oriented, curved plates extending in the radial direction. Simplified assembly drawings of the two elements are shown in Fig. 3, and the pertinent design and nuclear characteristics are listed in Tables 1 and 2. The elements used for the third critical experiment were close representations of the reactor elements; however, some changes were required in side plate configuration and the plates were loosely contained so no welding was required.

A fuel element was expected to have an average lifetime at 100,000 kw of 14 days; in practice, lives of over 20 days were obtained with the first several cores. Water flow, at design conditions, is 10,800 gpm, which corresponds to a velocity of 42 fps and a pressure drop of 73.5 psi. With a total heat power of 100,000 kw, the average heat flux is 0.8×10^6 Btu ft^{-2} hr^{-1} and the calculated maximum hot spot heat flux is 1.99×10^6 Btu ft^{-2} hr^{-1}. The average design water inlet and outlet temperatures are 50 and 90°C, respectively.[1,6]

Aluminum was selected as the construction material because of its good thermal conductivity and low neutron absorption cross section, but designing an aluminum reactor for such a high thermal performance is difficult because its high-temperature strength and melting point are low. If melting is to be avoided, close control of both the design and fabrication variables must be achieved. Reducing both the number of hot spots and their maximum temperatures has therefore been a major goal of the development program.

The fuel plates fit into slots in the side plates and are intermittently attached to them by welds made in circumferential grooves cut

---

[5]J. W. Tackett, J. H. Erwin, C. F. Leitten, Jr., and G. M. Slaughter, "Assembly and Welding Development for the High-Flux Isotope Reactor Fuel Element," pp. 290–314 in Research Reactor Fuel Element Conference, September 17–19, 1962, Gatlinburg, Tennessee, TID-7642, Book 1.

[6]N. Hilvety and T. G. Chapman, "Thermal Design of the HFIR Fuel Element," pp. 138–151 in Research Reactor Fuel Element Conference, September 17–19, 1962, Gatlinburg, Tennessee, TID-7642, Book 1.

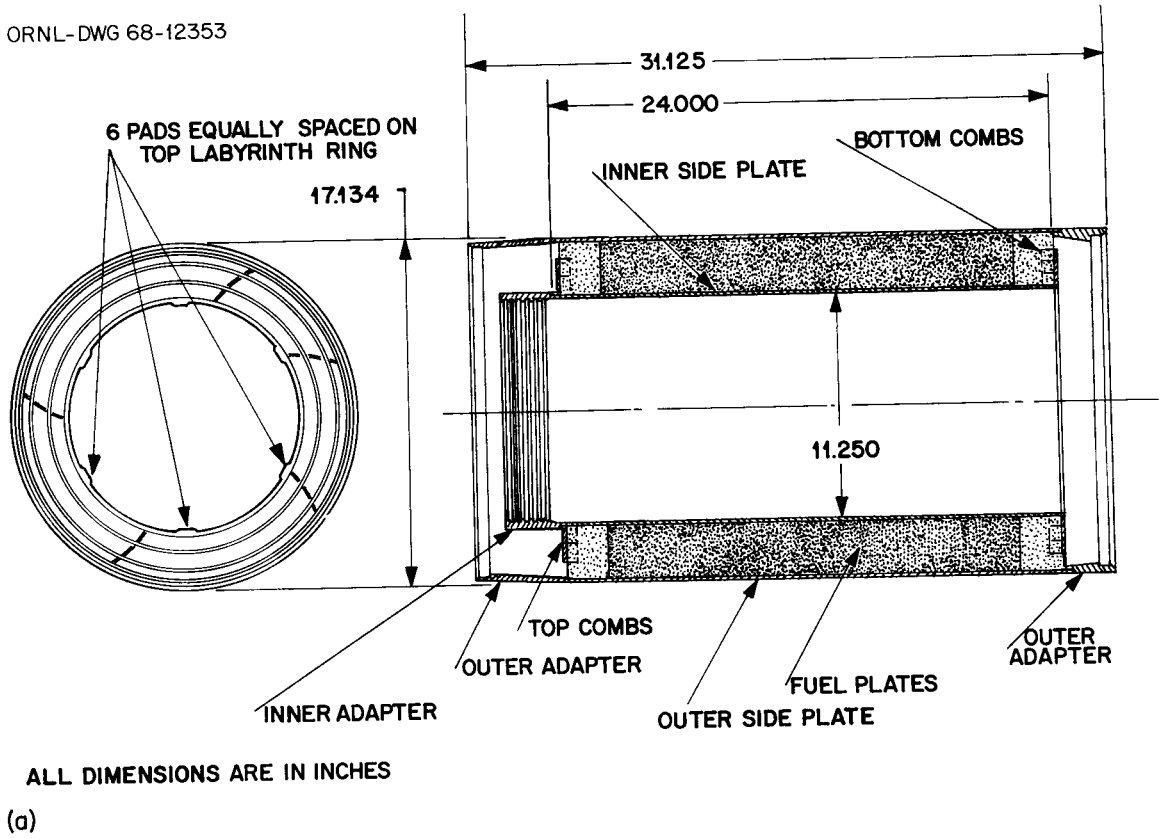

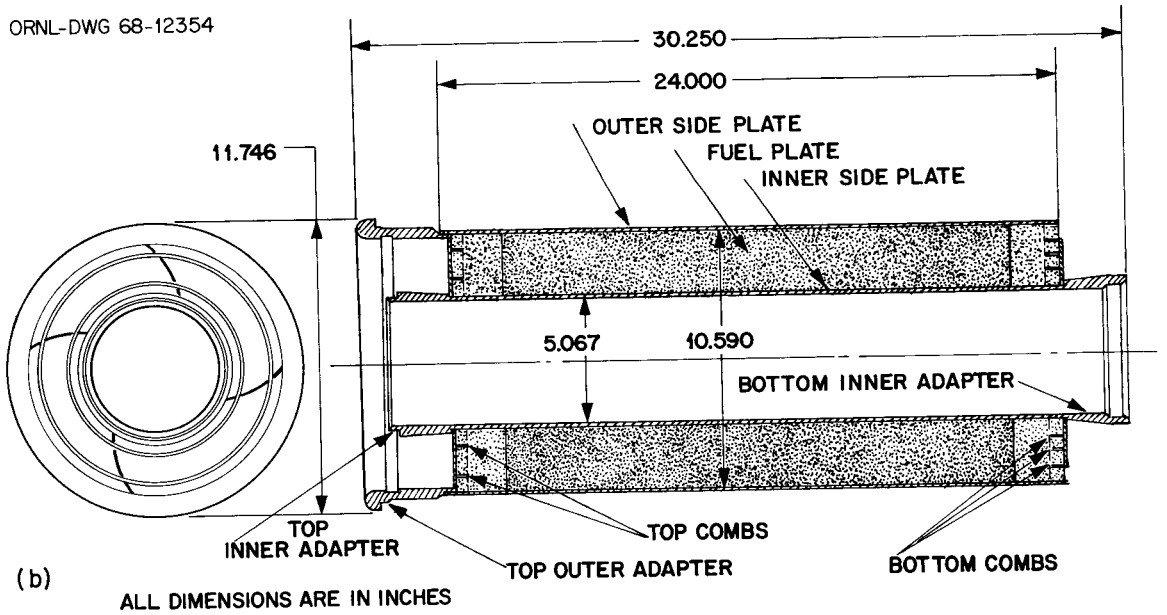

Fig. 3. Schematic Assembly Diagrams of HFIR Fuel Elements. (a) Outer element. (b) Inner element.

Table 1. Summary of Pertinent Design Data for the HFIR Fuel Elements[a]

Type of core	Cylindrical annulus, flux trap
Type of fuel elements	Cylindrical annuli (2); aluminum fuel plates in involute geometry
Dimensions, in.	
Fuel-plate thickness	0.050
Coolant-channel thickness	0.050
Length of fuel plates	24
Lenght of active core	20
Inside diameter, inner fuel element	5.067
Outside diameter, inner fuel element	10.590
Inside diameter, outer fuel element	11.250
Outside diameter, outer fuel element	17.124
Active volume, liters	50.78
Heat transfer surface area, ft^2	430.3
Fuel element materials	
Side plates	6061 Aluminum
Cladding	6061 Aluminum
Core matrix	101 Aluminum
Fuel	U_3O_8(93% ^{235}U)
Fuel loading, kg of ^{235}U	9.40
Inner element	2.595
Outer element	6.805
Burnable poison	B_4C dispersed in aluminum
Burnable poison loading (inner element), grams of ^{10}B	3.60
Heat removal	
Total reactor power, Mw	100
Power density (97.5 Mw in fuel region), Mw/liter	
Average	1.92
Maximum	4.26
Heat flux (97.5 Mw conducted to coolant), Btu hr^{-1} ft^{-2}	
Average	7.73×10^5
Hot spot	1.99×10^6
Burnout power level at steady state, Mw	
Beginning of fuel cycle	
600-psi core inlet pressure	165
900-psi core inlet pressure	169
End of 14-day fuel cycle	
600-psi core inlet pressure	150
900-psi core inlet pressure	154
Coolant velocity (average), fps	42

[a]F. T. Binford and E. N. Cramer, The High Flux Isotope Reactor. Volume I. Functional Description, ORNL-3572 (May 1964).

Table 2. General Nuclear Characteristics of the HFIR[a]

Reactor power, Mw	100
Neutron flux, neutrons cm^{-2} sec^{-1}	
Maximum unperturbed thermal flux in island	5.5×10^{15}
Average thermal flux in island target (300 g of ^{242}Pu)	2.0×10^{15}
Average nonthermal flux in island target	2.4×10^{15}
Maximum nonthermal flux in fuel region	4.0×10^{15}
Maximum unperturbed thermal flux in beryllium reflector	
Beginning of fuel cycle	1.1×10^{15}
End of fuel cycle	1.6×10^{15}
Maximum unperturbed thermal flux at Be-H_2O reflector interface	
Beginning of fuel cycle	1.4×10^{14}
End of fuel cycle	1.7×10^{14}
Prompt-neutron lifetime, μsec	
Beginning of cycle	35
After 10 days	70
Effective delayed-neutron fraction	0.0071
Length of typical fuel cycle, days	22[b]

[a]Taken from F. T. Binford and E. N. Cramer, The High Flux Isotope Reactor. Volume I. Functional Description, ORNL-3572 (May 1964).

[b]Up-to-date value based on experience.

into the opposite surface. To provide end stiffening, combs are attached at each end of the fuel plates. End adapters are required to provide location and support for the assembly within the reactor. The design of the side plates and end fittings was strongly influenced by the need for frequent replacement of fuel elements, which imposes a need for rapid operation with assurance of positive alignment to close tolerances. These design complexities and specified tolerances had to be balanced against the resultant increase in production costs. Another balance was required between maximum achievable core life and power level and minimum production costs.

Fuel Plates

Each HFIR fuel plate is of a sandwich-type construction composed of a fuel-bearing cermet hermetically sealed between covers of type 6061 aluminum. To minimize the radial peak-to-average power-density ratio, the fuel is nonuniformly distributed along the arc of the involute. A burnable poison is included in the inner fuel element to further flatten the flux profile and to reduce the negative reactivity requirements of the control plates.

We achieved the design requirements by using a two-region rectangular, parallelepiped fuel core as shown in Fig. 4. The U_3O_8 fuel is dispersed in aluminum powder in a section whose thickness varies nonlinearly across the plate. A complementary filler section of aluminum powder completes the core. The burnable poison is added, as boron carbide powder, to the filler sections of the inner element plates. The inner and outer plates contain 15.18 and 18.44 g of ^{235}U each, which results in average concentrations of 30 and 41% U_3O_8 by weight, respectively. If the specified heat transfer is to be achieved, all interface bonds must be sound, and the fuel and poison concentrations must both be correct and distributed in a nearly ideal manner. The plates are approximately 2 ft × 3.5 in. × 0.050 in.; the exact dimensions are given on Fig 5. The plates are shaped into an involute configuration, as shown in Fig. 6 for an inner plate.

REQUIREMENTS

The fabrication requirements for the element for initial use in the reactor were included in the specifications.[7] Some of the more critical items from these specifications that affect the fabrication are listed below.

---

[7]G. M. Adamson, Jr., and J. R. McWherter, Specifications for High Flux Reactor Fuel Elements, HFIR-FE-1, ORNL-TM-902 (August 1964).

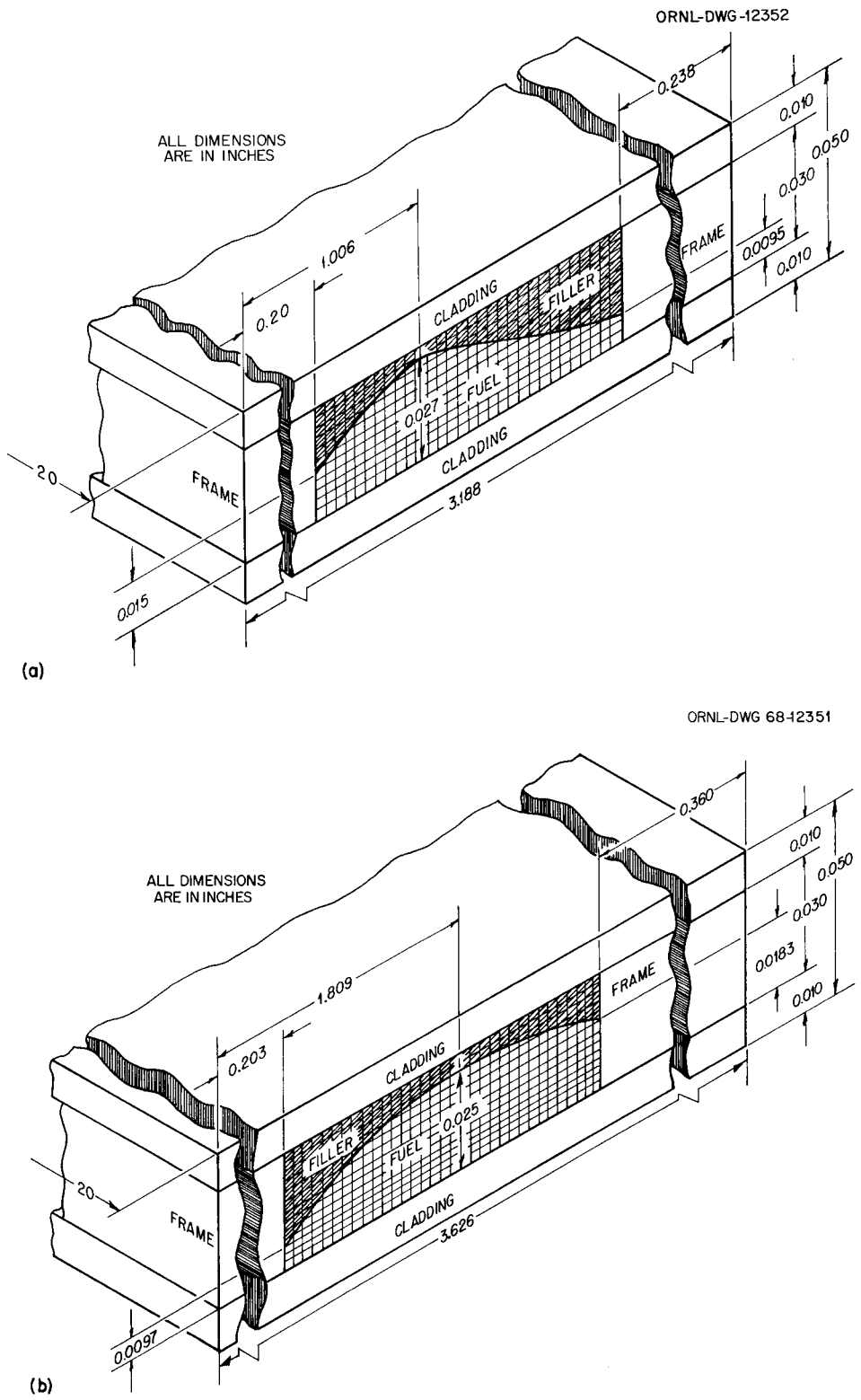

Fig. 4. Configuration of Fuel Cores. (a) Outer element. (b) Inner element.

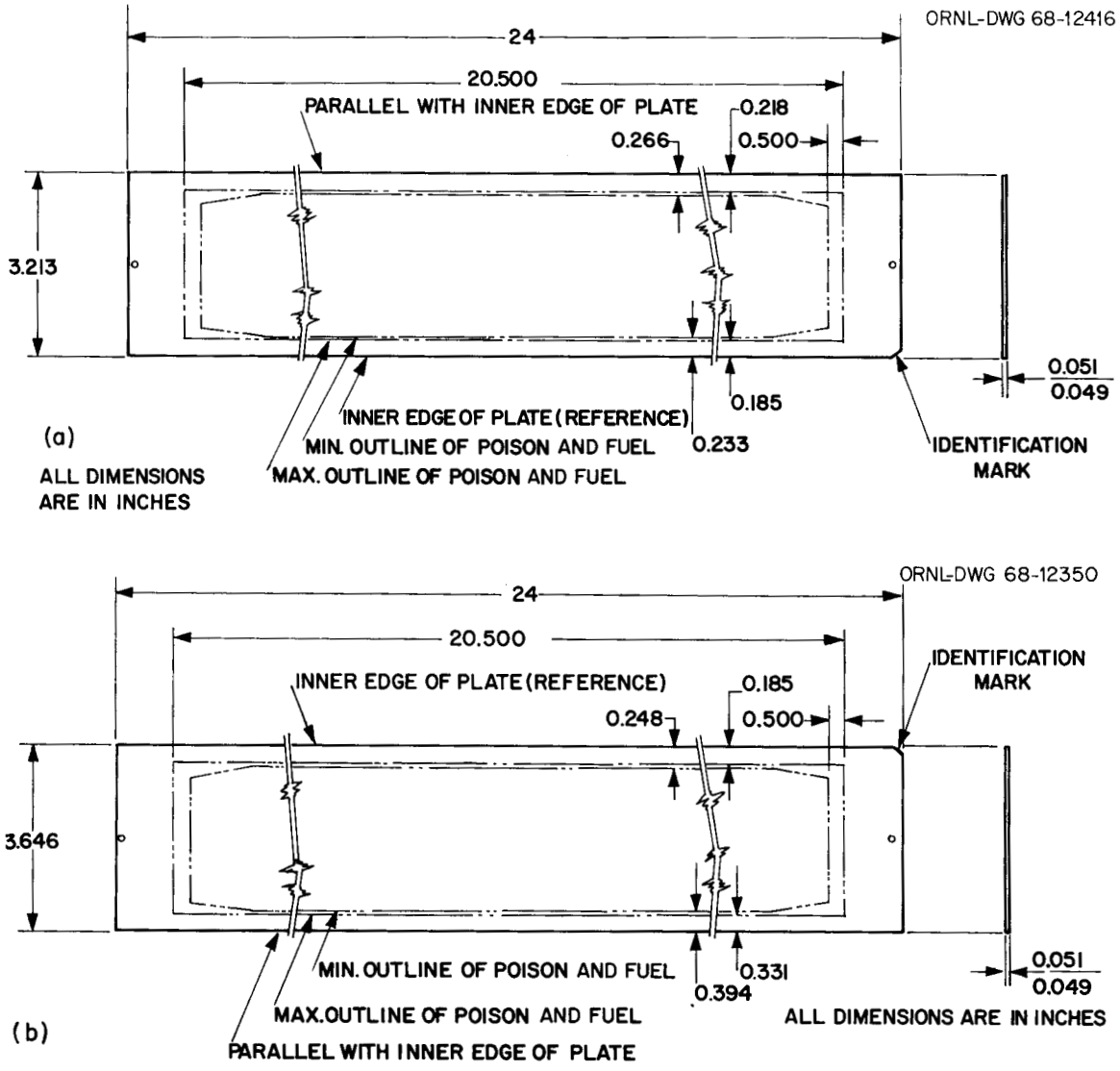

Fig. 5. Dimensions of Fuel Plates. (a) Outer element. (b) Inner element.

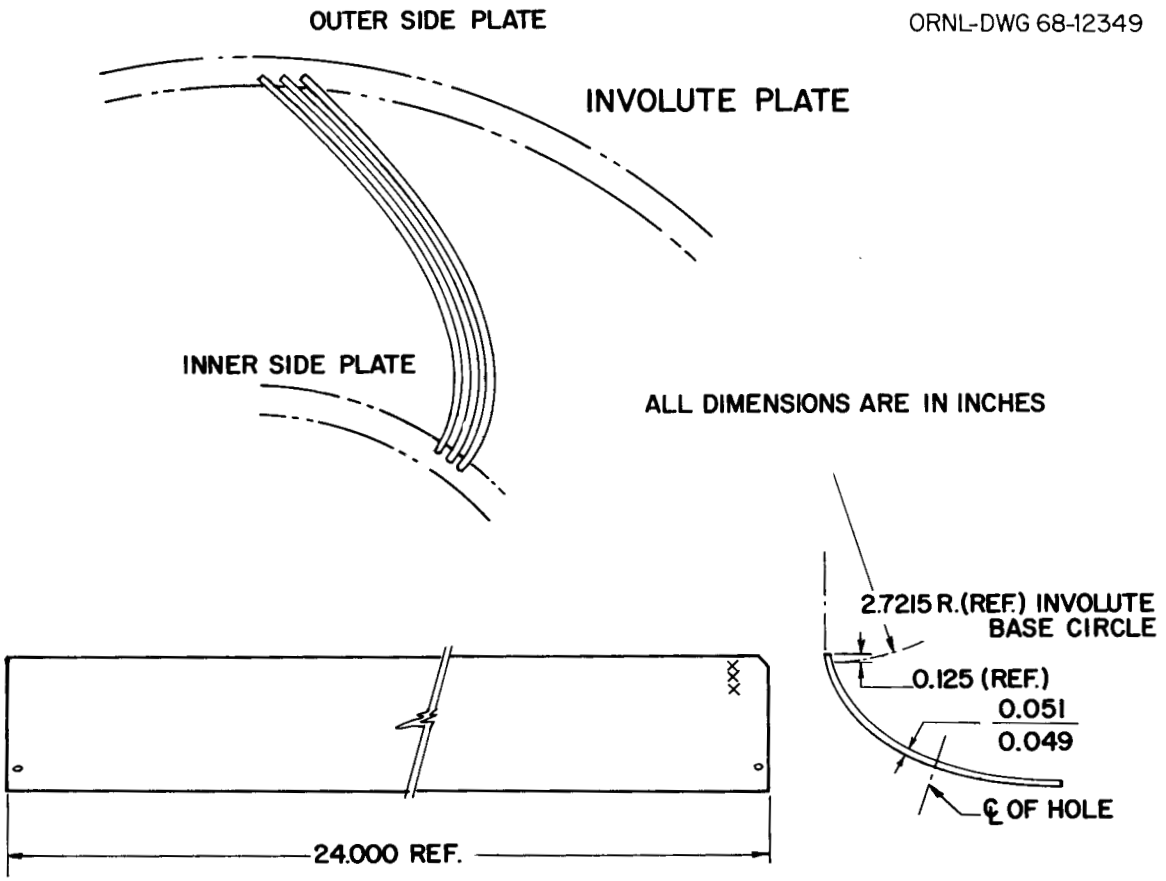

Fig. 6. Curvature of Inner Fuel Plate.

Fuel Plates

1. Any pits or scratches greater than 0.001 in. deep or dents larger than 0.25 in. in diameter in the fuel plate surfaces are cause for rejection.

2. The cover plates must be bonded to both the core and frame surfaces. Acceptable bonding is defined as no separation between the layers visible at low magnification and grain growth evenly distributed across at least half the aluminum-to-aluminum portion of the interface length.

3. The fuel plates must be formed to within 0.015 in. of the true involute shape, with duplication within ±0.008 in.

4. Each inner element plate contains 15.18 g ± 1.0% of ^{235}U and each outer element plate contains 18.44 g ± 1.0% of ^{235}U.

5. The uranium for each core is individually weighed and the weight is recorded.

6. Fuel plate cores are made as single units containing fuel and filler. No core edge may have a radius of curvature greater than 0.010 in. Core thickness, after outgassing, must not vary more than 0.004 in. in any core. All cores have an interference fit with their picture frames of 0.005 ± 0.003 in.

7. All fuel plates are rolled to a final thickness of 0.050 ± 0.001 in. Thickness variations within any single plate may not exceed ±0.0005 in. The plates are cold reduced 20%.

8. Uranium may not extend beyond the maximum core outlines as shown on the drawings, (Fig. 5).

9. The mass of ^{235}U per unit area of fuel plate within the maximum fuel core outline must not exceed 30% of the specified value for any 5/64-in.-diam spot (area of 0.0048 in.^{2}).

10. The mass of ^{235}U per unit area averaged over a length in the core should be within ±10% of the specified value. The average is determined electronically over an area 5/64 in. wide and varying in length from approximately 1/2 in. to 1 1/2 in., depending upon the uranium concentration preceding any change in concentration and the magnitude of that change.

11. Each filler region for the inner element fuel plates contains a specified amount of ^{10}B in the form of boron carbide in the range of 0.01 to 0.025 g of ^{10}B per plate. The initial value, used in this program, was 0.0211 g.

12. The amount of ^{10}B per plate is maintained within ±10% of the specified value.

13. The boron carbide for each filler piece is weighed individually.

14. Boron carbide may not extend beyond the maximum fuel core outline.

15. The concentration of ^{10}B within any 0.20 in.^{2} area within the minimum core area of the inner annulus shall be within ±35% of the specified concentration.

16. After final machining, every fuel plate must be checked to assure conformance with the specified core and frame dimensions.

17. All fuel plates need an average cladding thickness greater than 0.010 in. on each surface, and the cladding thickness must not be less than 0.007 in. at any point.

18. A procedure must be established by which the core hump location of every fuel plate may be determined and its location indicated.

19. If at any stage of plate fabrication a blister greater than 1/16 in. in diameter is observed, the plate shall be rejected immediately. In the last anneal preceding the cold reduction, each plate is held at $500 \begin{smallmatrix}+5\\-10\end{smallmatrix}$ °C for a minimum of 1 hr. After cooling, both sides of every plate are visually examined for blisters.

20. After the completion of the flat plate fabrication and while the plate is in the annealed condition, the entire surface of each plate receives an ultrasonic examination for nonbond. Any response larger than that produced by a 1/16-in.-diam (0.00307 in.^{2}) reference discontinuity is cause for rejection of the plate.

Fuel Elements

1. Elements must be clean and free from foreign matter.

2. Every coolant channel thickness shall be 0.050 ± 0.010 in. when measured at any point.

3. The average of five thickness measurements for any individual cross section of a coolant channel must be 0.050 ± 0.006 in.

4. Fuel may not be within 0.045 in. of a side plate.

5. In the assembled element, the fuel plates must protrude at least 0.015 in. into the weld grooves of the inner side plate and 0.035 in. into the weld grooves of the outer side plate.

6. Each fuel plate is welded to both the inner and outer side plates at 24 axial locations.

7. Each plate attachment weld needs a minimum pullout strength of 100 lb when tested in tension with the force applied normal to the bottom surface of the fuel plate slot.

8. The weld should not penetrate more than 0.010 in. into the plate width as measured from the side plate surface (top of the slots).

9. The face side of each weld must be free of defects such as cracks, incomplete fusion, and incomplete penetration; in addition, it shall be free from irregular bead contour, oxidation, and terminal craters in excess of that present on the approved quality standard. The standard is a selected qualification test weld.

10. The root side of the welds must be free of gross oxidation, sagging, and warpage.

11. The weld grooves must be filled sufficiently so that after final machining, no surface depressions are present on the inner surface of the inner element or the outer surface of the outer element.

12. The porosity or voids on any exposed surface or cross section must not exceed the size shown on the ASME Boiler and Pressure Vessel Code, Section VIII, Appendix IV, Porosity Charts for plate 1/4 in. or less and size assorted. The amount of both large and small pores shall be restricted to half the amounts shown on the chart.

13. Each end of each fuel plate must be welded to the combs.

14. All comb welds must have smooth, rounded surfaces and be free from overlaps, incomplete fusion, excessive oxidation, and cracks or cracklike indications.

15. The comb weld width should not exceed 1.3 times the comb width at any location.

16. The comb teeth should not melt to a depth greater than 1/8 in. below the end of the fuel plate.

Materials

Fissile Compound

While initially both uranium-aluminum alloys and the oxides were considered as possible HFIR fuels, the oxides were ultimately selected. This decision was based primarily upon the required uranium concentration coupled with the tight loading and homogeneity specifications and also on an early requirement that boron be uniformly distributed through the

core. This was later modified to include only the filler. The use of U_3O_8 in preference to UO_2 was based upon prior fabrication experience with both the Geneva pool reactor[8] and the pool reactor at the Puerto Rico Nuclear Center.[9] Both oxides had been shown to possess adequate radiation resistance at low temperatures,[10] and, at that time, no data were available on either at elevated temperatures.

The oxide used for the development phases of the program was a double high-fired U_3O_8 prepared from uranyl peroxide by the Y-12 Plant of Union Carbide Corporation, Oak Ridge, Tennessee. Table 3 lists its characteristics; it was separated into size fractions, and the −170 +325 fraction was used. Although this oxide was far from spherical, it did not contain many sharp corners or irregular particles, as may be seen in Fig. 7, and did not show excessive fracture or breakup during fabrication.[11]

Burnable Poison

Natural boron carbide, B_4C, was specified as the burnable poison since only small quantities of ^{10}B were required. The natural material was preferred for both cost and simplified handling. Previous work[9] had shown that B_4C was compatible with both aluminum and U_3O_8 under the specified fabrication conditions.

---

[8]J. E. Cunningham, R. J. Beaver, W. C. Thurber, and R. C. Waugh, "Fuel Dispersions in Aluminum-Base Elements for Research Reactors," pp. 269–297 in Fuel Element Conference, Paris, November 18–23, 1957, TID-7546, Book 1 (March 1958).

[9]W. J. Kucera, C. F. Leitten, Jr., and R. J. Beaver, Specifications and Procedures Used in Manufacturing U_3O_8-Aluminum Dispersion Fuel Elements for Core I of the Puerto Rico Research Reactor, ORNL-3458 (Oct. 7, 1963).

[10]G. M. Adamson, Jr., R. J. Beaver, and J. E. Cunningham, "Radiation Performance and Fabrication Advances with Aluminum Dispersion Fuel Elements," pp. 433–466 in Plansee Proceedings 1961, Powder Metallurgy in the Nuclear Age (ed. by F. Benesovsky) Springer Verlag, Berlin, 1962.

[11]W. J. Werner and J. R. Barkman, Characterization and Production of U_3O_8 for the High Flux Isotope Reactor, ORNL-4052 (April 1967).

Table 3. Characteristics of U_3O_8

Enrichment, %	~ 93
Density,[a] g/cm^3	8.2
Surface area,[b] m^2/g	< 0.05
UO_2, %	< 1.0
Total uranium, %	> 84.5

[a]Density by Toulene pycnometer.

[b]Surface area by static krypton BET.

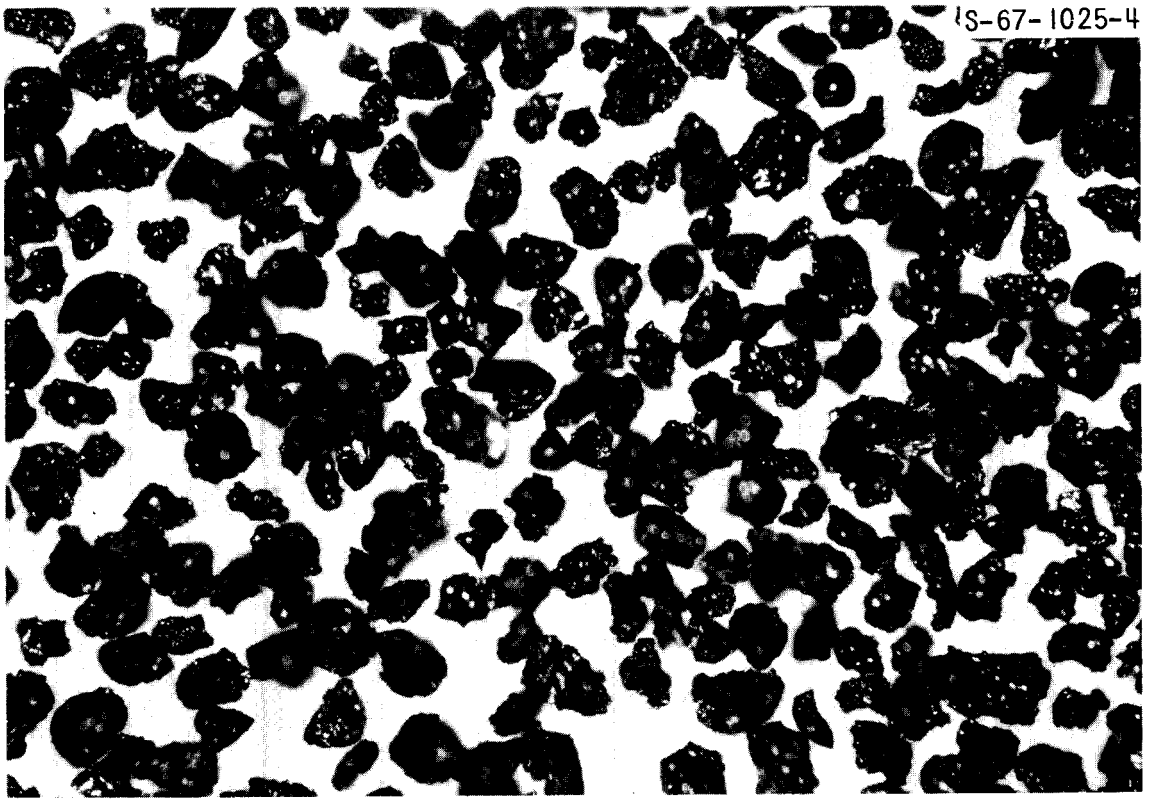

Fig. 7. U_3O_8 Used in HFIR Fuel Elements.

The boron carbide specified was the equivalent of the Norton Company's high purity grade. This material contains approximately 18.5 wt % ^{10}B and 75.9% natural boron. It was used as being −325 mesh (< 44 μ); actually 100% was smaller than 20 μ and over 80% under 10 μ. Typical analyses are presented in Table 4.

Table 4. Typical Boron Carbide Analyses

Element	Content (wt %)
B	80.7
B + C	98.1
B_2O_3	0.1
Fe	0.4
Al	0.15
Ca	0.05
Mg	0.005

Aluminum Cylinders

The HFIR is unique in that it does not contain any components within the core that serve primarily as structural components. Mechanically, the element is self-supporting. This requires that the cylindrical side plates be made as strong as possible subject to the penalty that excessive aluminum reduces the core operating life.

Type 6061 aluminum was specified for all cylindrical side plates and end fittings. To improve dimensional stability, the large outer side plate was purchased with a T6511 temper while the others were T6. The small innermost side plate was specified as "Aluminum Alloy Drawn Seamless Tubes," ASTM B-210-61, whereas the others were to ASTM B-235-61, "Aluminum Alloy Extruded Tubes."

Aluminum Sheet and Plate

Type 6061 aluminum in the F condition was selected as the material for both the fuel plate frames and cladding. The material conformed to

ASTM specification B-209-61, "Aluminum Alloy Sheet and Plate." The F condition was also the one in which the final fuel plates were used. The selection of type 6061-F for the aluminum stock was based upon its improved strength over the more conventional type 1100 and its comparable corrosion resistance[12] at HFIR temperatures.

Since hot roll bonding of type 1100 aluminum to itself is much more certain than is the bonding of type 6061 to itself, all bonding surfaces were clad with type 1100 aluminum. The frame stock was clad on both sides and the cover stock on one side. The thinnest layer commercially available, 5% of the plate thickness, was used.

Aluminum Powder

The matrix powder for both the fueled area and the filler was Alcoa type 101 aluminum powder or its equivalent. This material was readily available commercially and had been used successfully in previous work. The powder was purchased as −100 mesh with no distribution specified. Subsequent work during production has shown that differences in size distribution sufficient to affect the fabrication may occur between various lots.

Aluminum Welding Filler Metals

All welding rods and welding electrodes (wire) were of type 4043 aluminum. The rods conformed to ASTM Specification B285-61T, "Aluminum and Aluminum Alloy Welding Rods and Bare Electrodes," and the electrodes were ordered to specification Mil-E-16053K, "Electrodes, Welding, Bare, Aluminum Alloys." All electrodes were purchased on high-quality level wound spools.

FUEL PLATE FABRICATION PROCEDURES

The fabrication of HFIR fuel elements may be separated into two major areas: fuel plate fabrication and element assembly. While the

---

[12] J. L. English, L. Rice, and J. C. Griess, The Corrosion of Aluminum Alloys in High-Velocity Water at 170 to 290°C, ORNL-3063 (June 1, 1961).

operations performed and tolerances achieved or required in one area do affect the other, they are largely independent efforts and will be discussed as such in this report. As would be expected from the tight specifications, a complex procedure was required to produce the HFIR fuel assemblies.

A flowsheet showing the operations required for fuel plate fabrication is presented in Fig. 8. For discussion, the operations have been divided into the following major categories; core preparation, cladding and rolling, plate forming, and inspection.

Core Preparation

The first step in the preparation of fuel plates was to consolidate the U_3O_8 and aluminum matrix powders into a powder metallurgy compact. The detailed configurations of the fuel compacts are shown in Fig. 9. The fabrication of fuel cores for the HFIR plates was more difficult than for other research reactors because of the varying thickness of the fuel portion and the tight tolerances. Another complication was that the boron burnable poison was to be distributed in a manner complementary to the fuel. After trying various fabrication techniques, we adopted a single cold-pressing, powder-metallurgy operation and used it successfully.

The homogeneity and the fuel distribution in the finished plates are determined largely in the core fabrication step. Rejected plates will result from improper blending, moist aluminum, irregularities in core contour, tamping of local areas, or turning up of the edges of the compact during pressing. Obtaining uniform dispersions is complicated by the wide differences in density between the aluminum powder (2.6 g/cm^3) and the U_3O_8 powder (8.2 g/cm^3).

Powder Preparation and Weighing

In the fabrication of the HFIR fuel cores, ease in operation was sacrificed for greater accuracy and control. Each fuel core and filler was weighed and blended individually rather than weighed or measured in portions from blended mixes. Although high-quality aluminum powder was

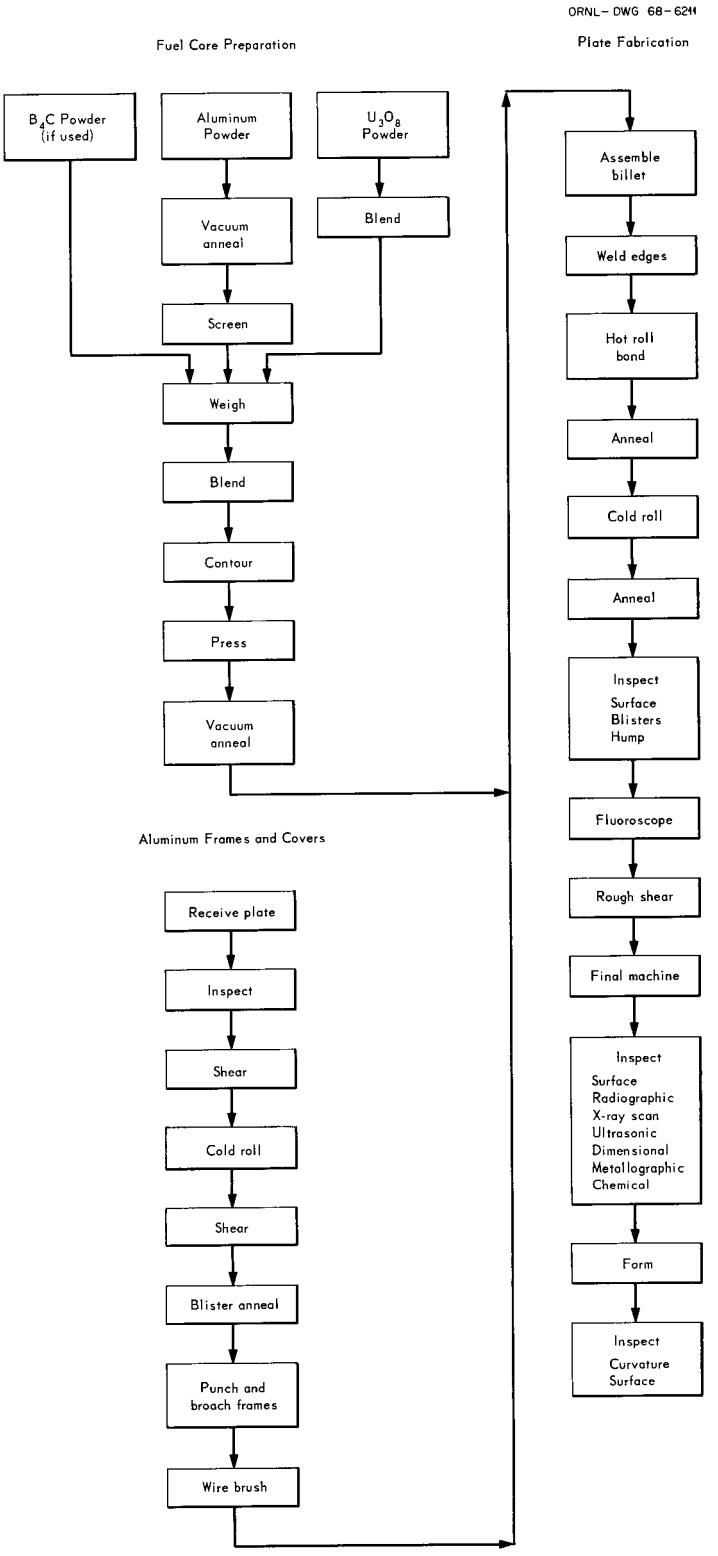

Fig. 8. Major Operations in Fuel Plate Fabrication.

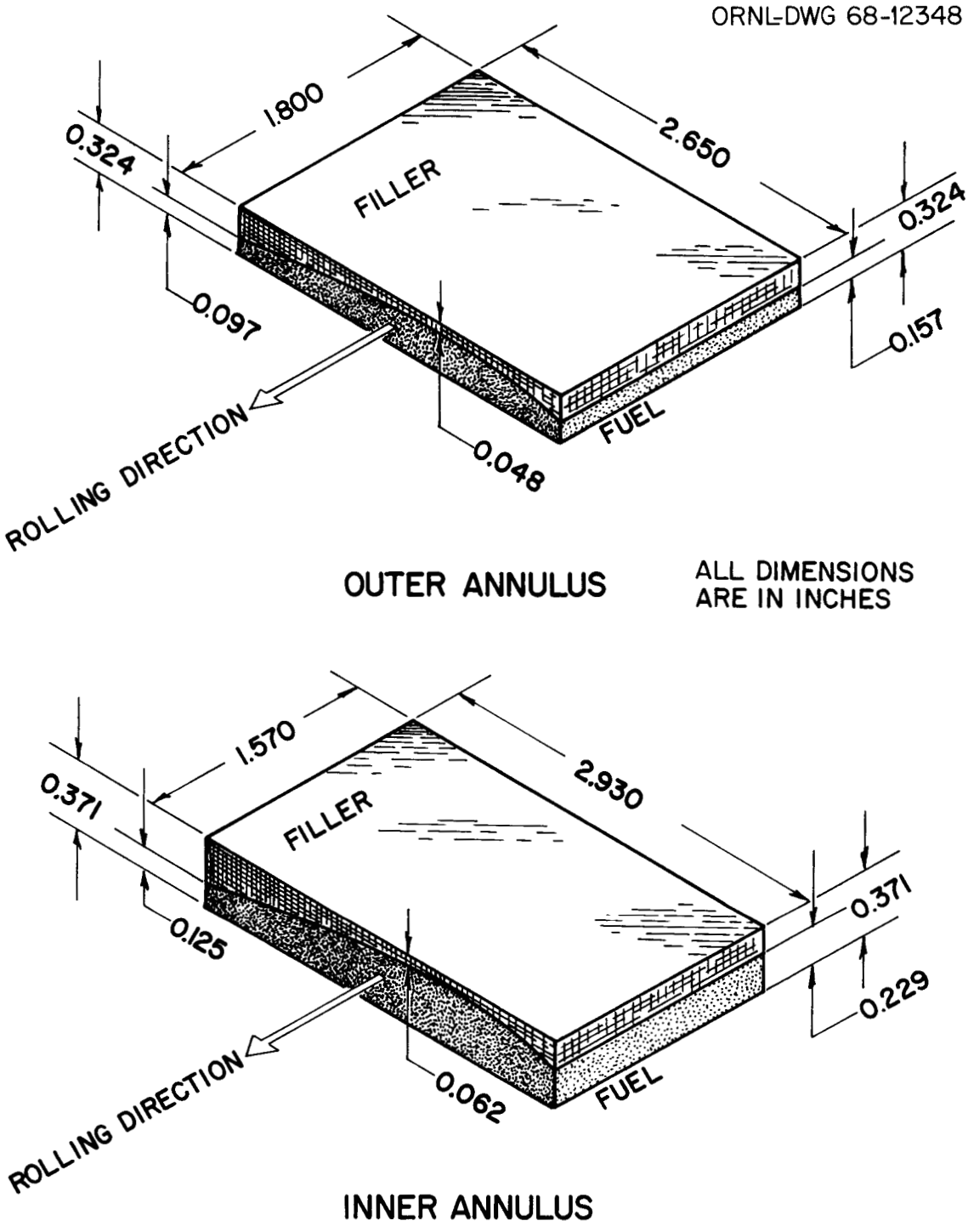

Fig. 9. Fuel Plate Composite Cores As Pressed.

used, it was further purified by a vacuum anneal. The aluminum handling procedure follows.

1. Anneal 1800 g of powder in a bed approximately 1 1/2 in. deep at 540°C for a minimum period of 4 hr at a pressure less than 0.015 torr.

2. Cool to below 50°C (pressure $\leq$ 0.015 torr); open system to atmosphere.

3. Bag materials in polyethylene and place in metal cans.

4. Immediately before use, screen powders through a 100-mesh screen.

5. Weigh out 100 g of powder from each batch and perform a screen analysis; powders should run between 70 and 80 wt % −325 mesh.

6. Weigh out 100 g of powder from each batch and analyze for total gas content (should be less than 0.02 std cm^3/g) and moisture (should be less than 0.01%).

The U_3O_8 and B_4C were used as received from the producer without pretreatment. Components other than B_4C were weighed on triple beam balances accurate to ±0.01 g. The materials were placed directly on the balance pans. The B_4C was weighed on weighing paper on an analytical balance to an accuracy of ±0.001 g. We handled the U_3O_8 in a dry box and all other materials in the open laboratory. After being weighed, sufficient aluminum for a single fuel core or filler was placed in a clean, dry cylindrical 4-oz glass bottle with a smooth inside surface.

Blending Procedure

To obtain homogeneous mixtures of fuel or poison with matrix material, the powders were blended in glass bottles in a modified U. S. Stoneware Company double cone blender, model 733. The standard blender cones had been replaced by a pair of 2-qt steel cans mounted on the horizontal motor shaft at an angle of 30° with the vertical. For the fuel cores, eight jars, each containing the specified amount of U_3O_8 and aluminum, were loaded into each can with sufficient padding to prevent breakage of the jars and blended by rotating the cans for 2 hr at 20 to 25 rpm. Inner-annulus filler sections were blended simultaneously in a similar manner with a second blender. Outer-annulus filler sections, containing only aluminum, did not require blending. If improper speeds or angles

or improperly shaped bottles are used, poor blending or even classification may occur.

Core Pressing

Immediately after blending, the cores were compacted by cold pressing. In a single operation, both the fuel core and filler were shaped and pressed into a single compact sufficiently strong to permit the necessary handling during roll billet preparation.

Pressing was done within a containment box mounted on the working surface of a 500-ton Farquhar top-acting hydraulic press. To achieve the desired tolerances we needed a well-aligned, high-quality press for this operation. The containment box contained open slits on each side through which the operator, wearing surgical gloves, could work. It was connected through an absolute filter to an exhaust system, which maintained a slight negative pressure within the box without creating turbulence.

The unique feature of this powder metallurgy operation was the use of shaped die tops that enabled us to obtain the desired fuel gradient by variations in fuel section thickness but still enabled us to work with rectangular cores. The fuel-powder mixture and the filler mixture were added to the same die cavity and pressed into a single piece. The die components and general procedure are shown in Fig. 10. The shape of the curved surfaces of the die tops and the die size are calculated from the final desired fuel contour and size; however, these values must be corrected for such things as rolling reduction, lateral spread during rolling, pressed density, and poured powder density.[13]

The sequence used for the pressing operation was as follows.

1. With the lower punch in the pressing position, the insides of the die cavity were lubricated (sparingly) with a 5 wt % solution of stearic acid in CCl_4.

---

[13]T. D. Watts, W. J. Werner, and J. P. Hammond, Calculations of Charge and Contour Dimensions of Powder-Loading Assembly Used in the Production of HFIR Composite Fuel Compacts, ORNL-TM-1193 (September 1965).

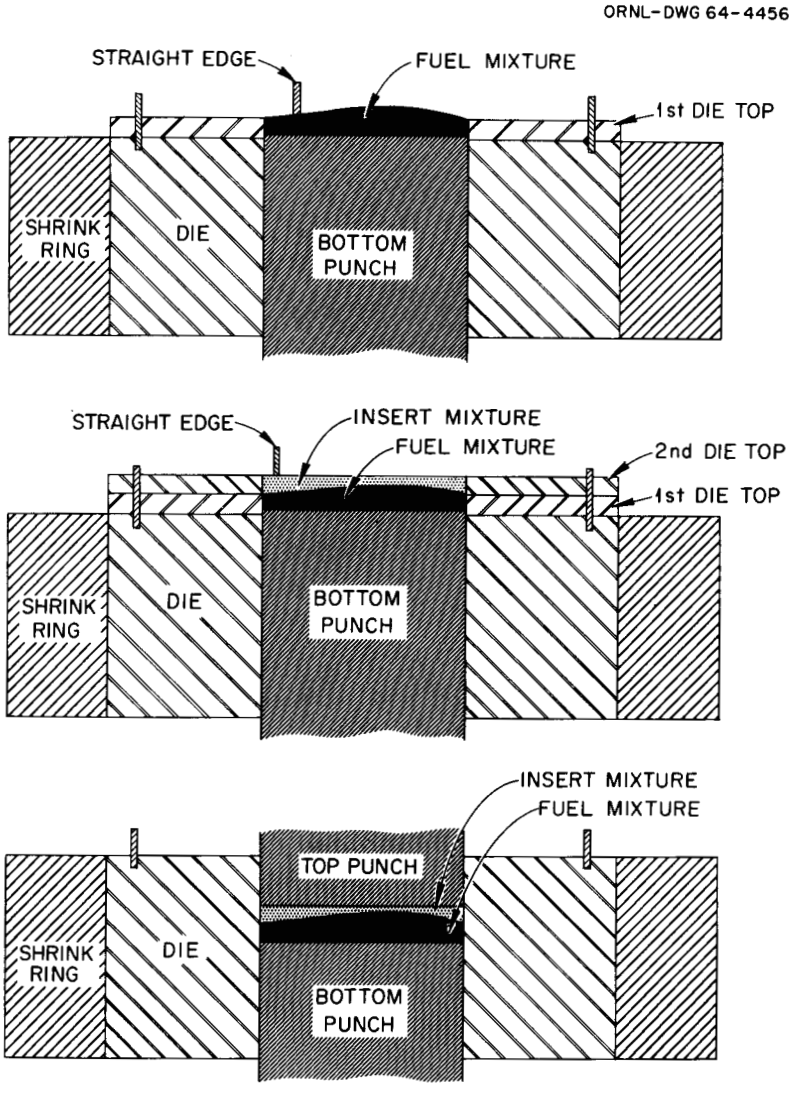

Fig. 10. Pressing Procedure for HFIR Fuel Plate Cores.

2. The first die top was then positioned on the die by means of the locating pins, and the bottom punch was brought up into the die top by means of the screw jack.

3. The fuel mixture was carefully poured into the die top cavity, and the jar and jar cap were lightly tapped against the die top to ensure removal of all the powders.

4. The powder was leveled to the first die top contour with a metal straight edge. The position of the lower punch was adjusted so the correct volume of powder completely filled the cavity with no edge depressions or compacting of the powders.

5. With the fuel section still in the leveled position, the second die top was gently positioned on top of the first by means of the locating pins.

6. The filler section powders were carefully poured on top of the leveled fuel section, and the jar and cap were tapped lightly against the die top. Care was used in pouring and leveling this powder to avoid compacting or disturbing the powder already in the die cavity.

7. The powder was then leveled by means of the straight edge. The position of the lower punch was again adjusted so the cavity was completely filled. Excess vertical movement of the powder charge was avoided.

8. The as-leveled duplex fuel compact was lowered into the pressing position, the die tops were removed, the pillow block was inserted into the die, and the fuel compact was compressed at 22.5 tsi pressure. (More recent work has shown that a pressure of approximately 30 tsi will result in compacts having more uniform density and dimensions.)

9. The fuel compact was ejected from the die, the insides of the die were wiped with a tissue saturated with CCl_4, and the pressing cycle was repeated on the next compact.

10. Each individual fuel compact was assigned a number, which also distinguished it as to type core (inner or outer annulus) and batch of oxide used to make the core. This same identity was carried through to the rolled plate. The number was scratched on each core on the filler surface.

11. After a batch of 24 fuel compacts had been pressed, they were individually weighed (±0.01 g) and measured (±0.0005 in.) and the values were recorded.

Vacuum Annealing of Pressed Compacts

To eliminate any trapped die lubricant or moisture that had been adsorbed on the powders during processing, all green compacts were vacuum heat treated. A maximum batch of 48 compacts was placed in an aluminum boat and inserted into a 6-in.-diam stainless steel horizontal muffle at room temperature. The compacts were in layers separated by crinkled stainless steel wire screen. After evacuation to a pressure less than 0.025 torr, the batch was heated to 590°C and held for 3 hr.

While the pressure may rise during the initial heating, it must remain below 0.025 torr for most of the heating cycle. The compacts were cooled under vacuum to below 50°C and then removed from the chamber. While some sintering probably took place during this heat treatment, that was not the purpose. Actually, a small increase in thickness of the cores was always found.

Each compact was then weighed and any that deviated by more than 0.3% from a previously established mean were rejected. The thickness of each compact was also measured at five locations with a micrometer; any variation larger than 0.004 in. was cause for rejection. Visual checks were made for chipped edges and blisters, either of which was also cause for rejection.

All acceptable compacts from an individual batch were placed in a plastic bag and stored in a desiccator. If storage of more than 48 hr was anticipated, a vacuum desiccator was used.

Cladding and Rolling

The powder metallurgy cores were converted into plates and simultaneously hermetically sealed in aluminum by a combination of hot and cold rolling. These procedures are modifications of the picture-frame technique, which has been used so successfully in fuel plate fabrication for many years. As illustrated in Fig. 11, each HFIR billet contained a double-window picture frame with integral aluminum spacer between the windows. The billet also required two cover plates and two fuel compacts.

Billet Assembly

Material for the cover plates was received as 0.300-in. sheet and that for the frames as 0.425-in. plate. All as-received aluminum plate was first inspected for blisters and surface condition. Any suspect areas were marked and removed; if more than a few were noted or if they were scattered over an entire plate surface, the entire plate was rejected.

Both plate and sheet were cold rolled to the specified thickness. The dimensions of the components for the billets for both annuli are listed in Table 5. The overall dimensions were obtained by shearing the

ORNL-LR-DWG 79825R

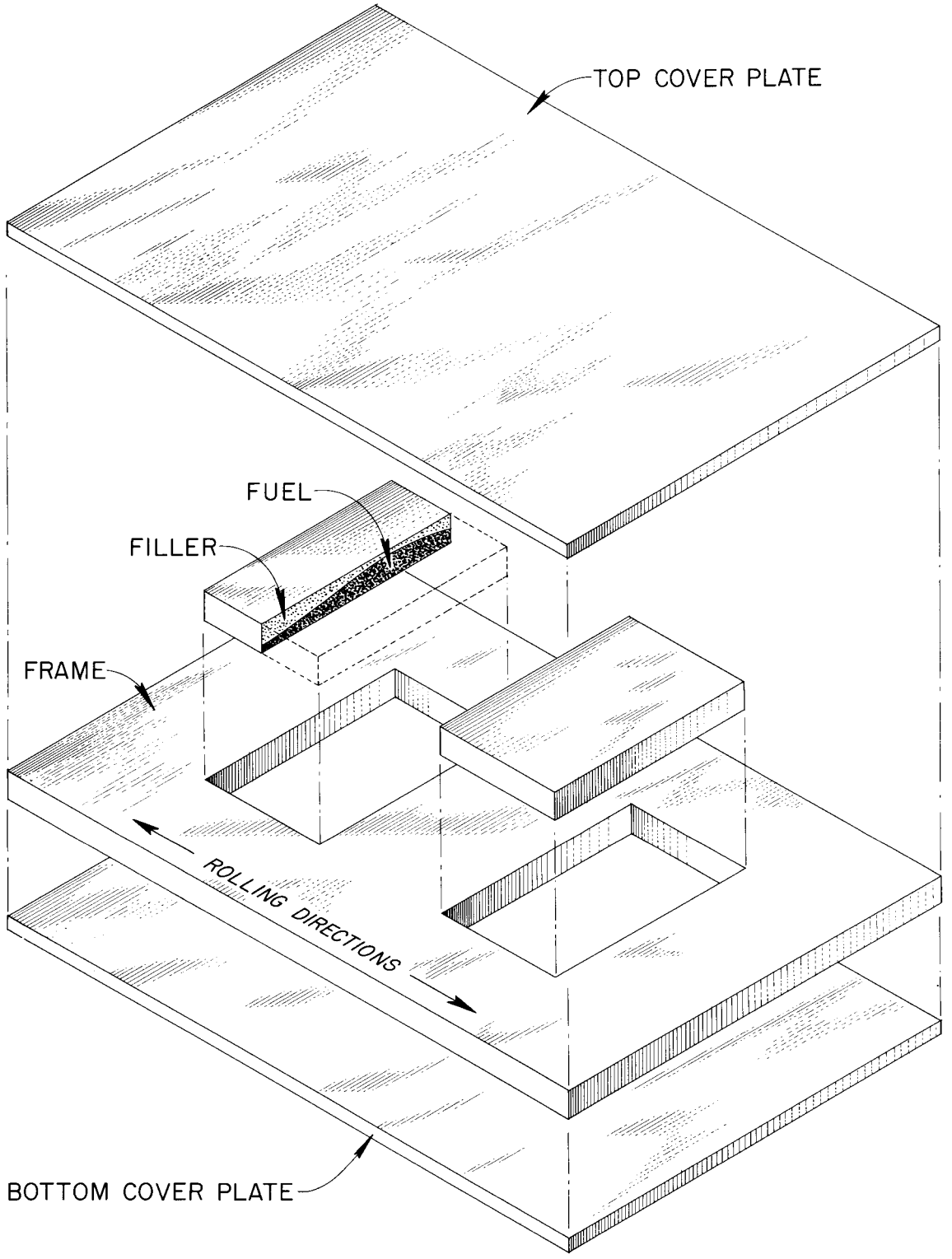

Fig. 11. General Design of Billets Used in Roll Cladding HFIR Fuel Plates.

Table 5. Dimensions of Billet Components

Billet Components	Dimensions, in.		
	Length	Width	Thickness
	Outer annulus		
Cover plate	8 1/4 ± 1/64	5 ± 1/64	0.128 ± 0.001
Picture frame	8 1/4 ± 1/64	5 ± 1/64	0.316 ± 0.001
Cavity	1.797 ± 0.001	2.645 ± 0.001	0.316 ± 0.001
Fuel compact	1.800 ± 0.001	2.650 ± 0.001	0.321 ± 0.002
	Inner annulus		
Cover plate	8 1/4 ± 1/64	5 1/2 ± 1/64	0.146 ± 0.001
Picture frame	8 1/4 ± 1/64	5 1/2 ± 1/64	0.365 ± 0.001
Cavity	1.565 ± 0.005	2.925 ± 0.005	0.365 ± 0.001
Fuel compact	1.573 ± 0.001	2.931 ± 0.001	0.371 ± 0.002

plate and sheet to size. Two symmetrically positioned windows with square corners were then punched and broached in the frame material. The punching and broaching assemblies used for blanking the frames are illustrated in Fig. 12. After broaching, the dimensions of each window were measured with a dial-indicating vernier caliper. Cover plates and frames were then degreased in trichloroethylene. In heat-treating and assembly operations after degreasing, the components were always handled with white cotton gloves, tongs, or both.

To guard against loss of fuel plates caused by blisters in the aluminum, all components received a blister check. All frames and covers were heated to 500°C for 2 hr and then visually examined for blisters.

Immediately before billet assembly, both alclad surfaces of the frames and the single clad surface of the covers were cleaned by scratch brushing with a power-driven stainless steel brush. The brushes were carefully kept free of lubricants and similar contaminants.

Table 5 shows that the fuel compacts were larger than the frame cavities into which they were inserted. The size differential ensured a close fit between the core and frame and provided material for core densification, both of which helped to reduce the occurrence of

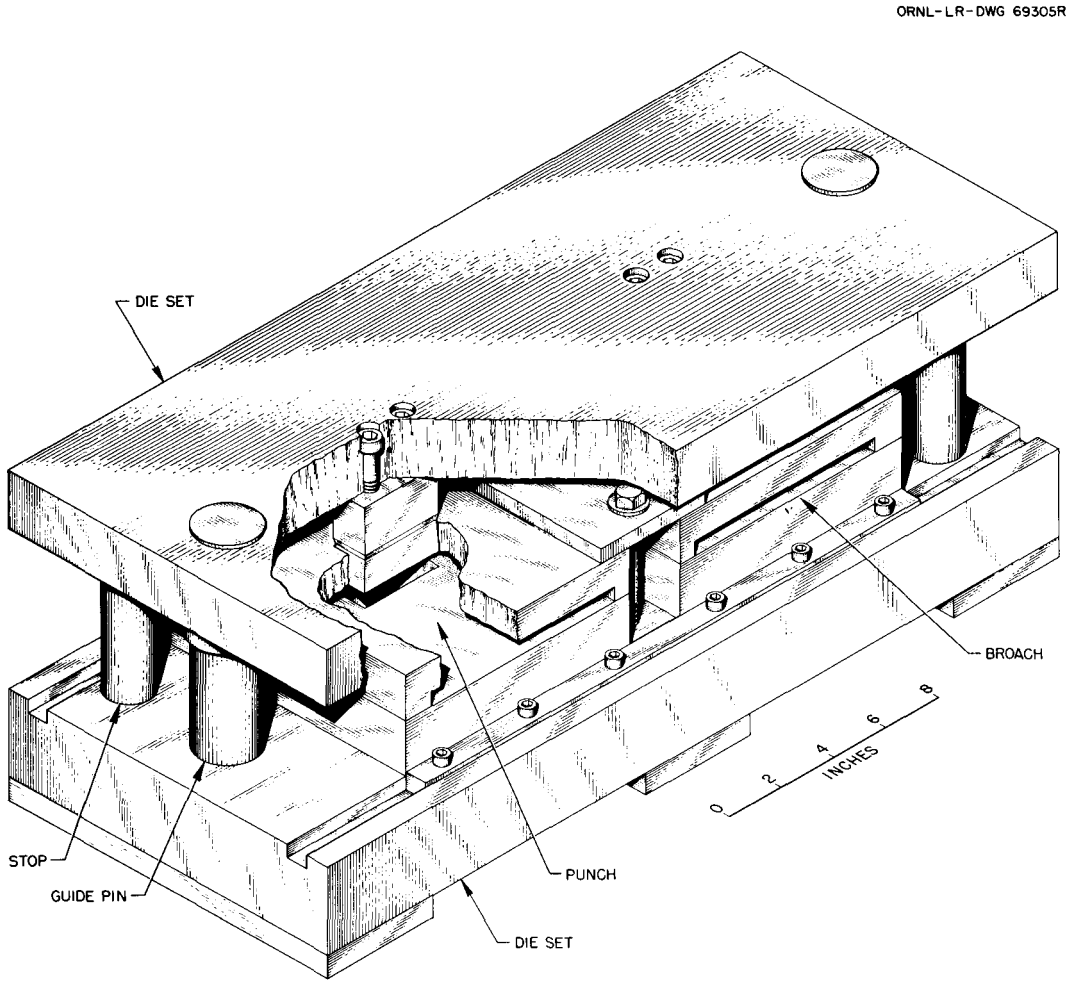

Fig. 12. Punch and Broach Assembly.

blisters during rolling. To assemble these components, the frames were heated to 500°C and then the cold compacts were inserted into the expanded windows.

The cover plates were clamped to both surfaces of the frames with the type-1100-clad faces in contact. Edge welds were made to prevent movement between the various components before bonding had been achieved during hot rolling. A peripheral weld, continuous except for approximately 3/4 in. at each corner, was made without the addition of filler metal. High-quality welds were not required, but the deposition of tungsten was avoided. The openings at the four corners provided an escape route for any entrapped air. Sufficient billets were assembled

and welded to provide a single day's rolling. If storage was necessary, vacuum dessicators were used.

Hot Roll Bonding

To form a plate and to provide a metallurgical bond between the various components, the billets were hot rolled to an 89% reduction in thickness, or to 0.0625 ± 0.0007 in. The reduction was accomplished on a two-high United Mill equipped with 12-in.-diam × 14-in.-wide rolls. The rolls were continuously, but sparingly, lubricated with a mixture of one-third SAE-90-weight Pinnacle cylinder oil and two-thirds kerosene. To ensure an even bite and uniform plate feed, the roll faces were preconditioned by rolling at 500°C at least 200 linear ft of aluminum to build up a thin layer of aluminum oxide on each roll surface.

The hot-reduction schedules are shown in Table 6. During rolling, after each pass all billets were rotated 180° about their longitudinal and transverse axes. The table shows that lighter reductions are used at both the beginning and the end of the fabrication sequence. At the

Table 6. Hot-Reduction Schedules

Pass	Reduction, %	
	Outer Annulus	Inner Annulus
1	15	14.0
2	15	14.0
3	23.6	22.0
4	23.8	22.0
5	23.8	22.1
6	23.8	21.8
7	24.1	21.8
8	23.4	22.2
9	12.2	22.0
10	8.3	13.0
11	5.3	9.5
12		6.7

beginning the light reductions set the components and properly establish the rolling characteristics whereas those at the end minimize thickness variations.

Because of furnace limitations, the billets were rolled in batches of three. It was necessary to have a furnace capable of maintaining a temperature of 500 ± 10°C over a length of 50 in. The billets were laid flat, side by side on a clean aluminum hearth. We used a heating period of at least 45 min before the first pass, 5 min before the next six passes, and 4 min before the others (subsequent development has shown that longer heating times are desirable). A second batch of billets was placed in the furnace for preheating after the fourth pass of the first batch. When a thickness of 0.082 in. had been achieved, the plate while still hot was sheared in the center, separating the two cores, and approximately 2 in. of aluminum was sheared from each end. Before the next mill pass these plates were reheated for 10 min.

To provide improved dimensional control at what was expected to be the last pass through the mill, two passes without reheat or roll adjustment were used. Plate thicknesses were then measured with micrometers. If the correct thickness had not been obtained, the plates were reheated for 5 min and rolled with additional double passes until a thickness of 0.0625 ± 0.001 in. was achieved. The plates were then air cooled to room temperature, and an identification number was scribed on an inactive end.

Special care was exercised during rolling to minimize cambering or "rainbowing" of the plates and to maintain the ends square. If excessive, such defects would hamper meeting the edge or end cladding tolerances. A level mill and closely controlled roll lubrication were required to avoid this difficulty.

Softening Anneal

The hot-rolled fuel plates were degreased in trichloroethylene vapor and then annealed for 1 hr at 500°C to remove stresses induced in the last few passes of the hot-rolling process. This anneal also develops blisters at nonbonded areas, thereby contributing to the first

inspection step. To avoid undue restraint of possible blister formation, no more than 12 plates were stacked together in the furnace.

The annealed plates were visually inspected for blisters. To delineate small raised areas, the major surfaces of the plates were slowly raised and lowered in a plane nearly parallel to the inspector's line of vision. A plate that contained any visible blisters located in the area not to be removed was rejected. Flaws such as embedded inclusions, impressions, or deep scratches were also cause for rejection.

Cold Rolling

To improve formability, dimensional tolerance, and surface quality, acceptable plates were cold rolled 20% to a final thickness of 0.0500 ± 0.0005 in. The 20% cold work was required to yield plates that would form reproducibly in subsequent operations. The same two-high United Mill used for hot rolling was employed for the cold rolling. The rolls were again lubricated with a mixture of one-third SAE-90-weight Pinnacle cylinder oil and two-thirds kerosene, applied continuously during the rolling. Care was used in maintaining cleanliness of both the mill and work tables; any chips, dirt, or other foreign matter resulted in scratched plates.

The schedule used during the cold reduction, based upon mill setting, is shown in Table 7. The plates receive four passes through the mill at each setting and were rotated 180° about their longitudinal and transverse axes after each pass. The thickness variation within any acceptable finished plate was less than ±0.0002 in.

Fuel Plate Annealing

To facilitate subsequent forming and marking operations, the composite plates must be flat and free from localized stress regions. They were flattened and annealed in a final heat treatment, which also increased the confidence level in a subsequent examination by enlarging or opening up nonbond areas to make them easier to detect. A batch of 72 plates was arranged in three equal stacks with a 2-in.-thick aluminum platen on top of the stacks. Since flattening was achieved from the

Table 7. Cold-Reduction Schedule

Passes	Reduction (%)	Reduction (in.)	Gage (in.)
1–4	5.6	0.0035	0.0595
5–8	3.5	0.0020	0.0575
9–12	3.5	0.0020	0.0555
13–16	3.5	0.0020	0.0535
17–20	2.8	0.0015	0.0520
21–24	1.9	0.0010	0.0510
25–28	1.9	0.0010	0.0500

weight of the platens, no clamping mechanism was used to position the plates. Care was necessary in both maintaining furnace cleanliness and in all handling of the plates to prevent scratches and embedment of inclusions. The cold-finished plates were annealed at 500°C for 120 min and then cooled to near room temperature at a controlled rate of 27°C/hr. We used a furnace capable of maintaining temperatures of 500 ± 5°C over the length of the plates and equipped with a temperature program controller. Frequent furnace temperature traverses were made to assure that the proper temperatures and control were being achieved.

To maintain the uniform heat treatment condition throughout the plate, all bending or similar deformation must be avoided. The plates are very soft and therefore very susceptible to scratching or picking up of foreign material. The plates must always be picked up and laid down directly with no sliding movement and with adequate support at both ends to prevent bending. For storage, every other plate was placed in an 0.003-in.-thick polyethylene tube.

Fluoroscopic Examination and Marking

The location of the active fuel core within the composite plates was established by comparing its fluoroscopic outline to that of a template positioned over the plate. As illustrated in Fig. 13, the

UNCLASSIFIED
ORNL-LR-DWG 79826

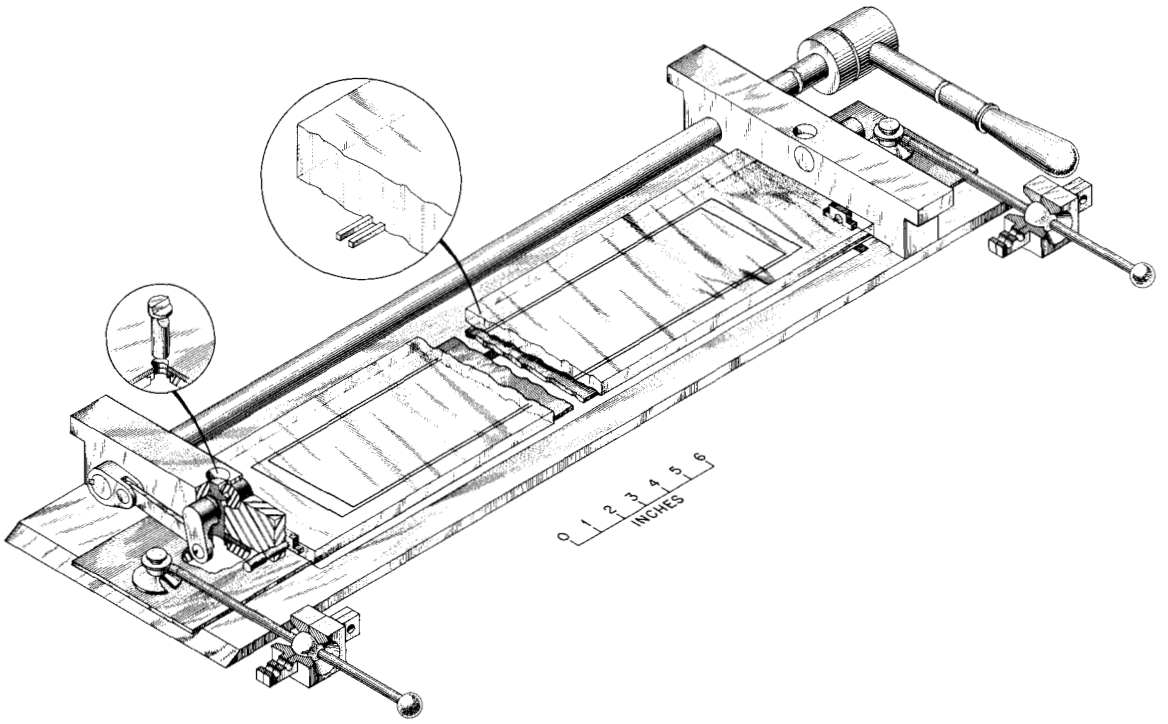

Fig. 13. Marking Equipment and Template for Punching Reference Maching Holes in HFIR Fuel Plates.

template was designed to permit positioning of the core with respect to a punch-and-die marking assembly. The marking assembly was mounted inside a General Electric model VI, type 4 175-kv-peak fluoroscope. It was used to simultaneously punch two 0.5000 ± 0.0005-in.-diam holes 26.000 ± 0.001 in. apart in the inactive aluminum ends of the annealed plates. These holes were used for positioning in subsequent machining operations.

The fuel plates were inserted into the punch-and-die assembly with the convex side of the core up and the hump toward the front of the template. The orientation was determined by an eddy-current method described below under "Fuel Plate Inspection." After the fuel outline was centered between the tolerance wires on the template, the plates were punched to establish the reference points. Before rough shearing, we inscribed the fuel plate number on the plate with a Burgess Vibratool in letters and numbers about 1/4 in. high, using a positioning template.

Our practice was to place the number on the side up during punching, 1 1/4 in. from the hole on the right as you face the edge near the fuel hump, and toward the corner away from the hump. This corner had been marked to show orientation during the hump location.

Reference lines for rough shearing the plates to length were then scribed 1 1/4 in. outside the punched holes.

Plate Sizing

The as-rolled plates were cut to plate size by a double operation. They were first sheared slightly oversize and then machined to final dimensions. The long side of the plate that was remote from the punched holes was sheared first. A fuel plate was positioned for shearing by placing the 0.500-in.-diam holes over two smaller pins whose center lines were 2.785 in. from the shear blade and 26 in. apart. To shear, outer-annulus plates were pushed forward until the pins contacted the front edge of the hole, and inner-annulus plates were pulled backward until pins contacted the back edge of the hole. Using stops on the shear at fixed references, we sheared the other long side to yield widths of 3.74 ± 0.03 in. and 3.42 ± 0.03 in. for inner- and outer-annulus plates, respectively. The ends of the plates were then sheared at the scribed lines to leave a length of 28 1/2 in.

The fuel plates were machined to final width with the fixture illustrated in Fig. 14. It consisted of a rectangular frame and a movable clamp plate to securely hold the stack of fuel plates. The top and bottom edges of the frame were ground parallel. Two parallel-ground blocks, which totaled 2 in. in thickness, were employed to support the fixture above the milling machine table. While the fuel plates were stacked and machined, the ends of the fixture were securely fastened to the table with step blocks and horseshoe clamps.

The fuel plates were usually machined in lots of 36 on a vertical milling machine. First, aluminum backup plates of 1/4 in. thickness and of the same length and width as the sheared composite were placed on each side of the stack of plates. Two holes had been drilled in the backup plates to match the punched holes in the fuel plates. All fuel

ORNL-LR-DWG. 76182

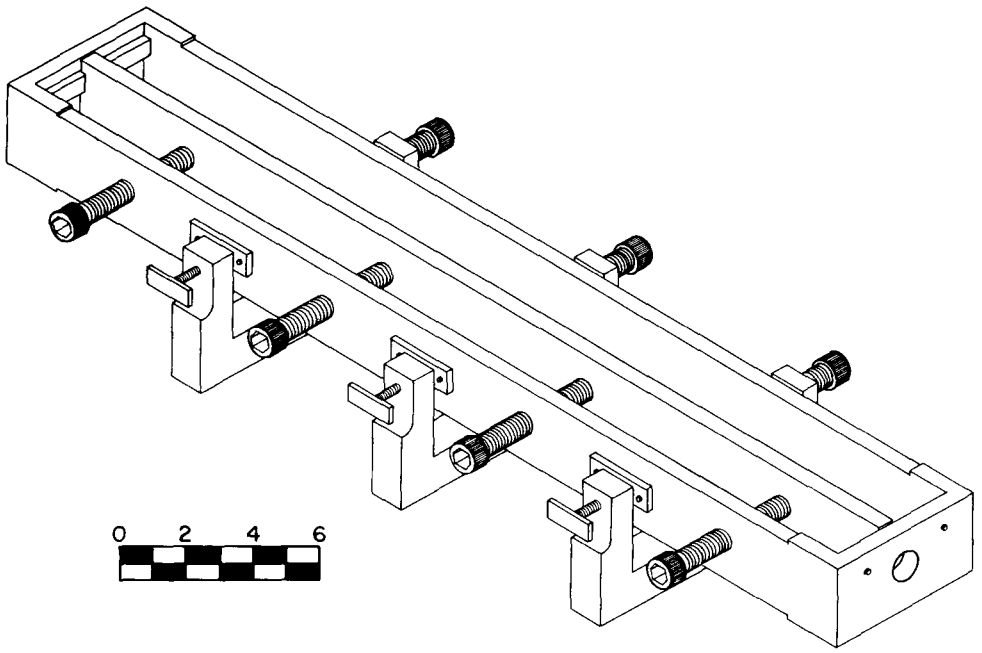

Fig. 14. Fuel Plate Machining Fixture.

plates were referenced for machining from two 1/2-in.-diam hardened dowel pins inserted through the holes in the plates. The plates were assembled on the dowel pins with their identification marks oriented identically. After each dowel pin was aligned with references to the parallel blocks, the open edge of the stack was machined with a Carboloy fly-cutter tool. The table speed was 2.5 to 3.5 in./min and the arbor velocity 545 to 815 rpm, depending on the quality of the cutting tool. The fixture was rotated 180° and reclamped to the table; then the fuel plates were machined to the required width. The width was measured with a micrometer.

After removal from the fixture, one end of the stack was cut off with a band saw to within 1/8 to 1/4 in. of the finished fuel plate end. This end was milled on a vertical milling machine to 25.00 ± 0.01 in. from the center line of the remaining dowel pin. In the milling operation,

the lot of plates was clamped to the milling table over two supporting blocks. Equal amounts of aluminum were removed from each end of the stack to yield a final fuel plate length of 24.000 ± 0.005 in. With the fuel plate numbers up, a 1/8-in. × 45° chamfer was then milled in the right-hand corner and on the edge to be inserted in the inner side plate. The plate was machined so this edge had narrower cladding. After completion of the machining operations, the plates were degreased in a vapor degreaser and the machined edges were lightly deburred by hand filing at approximately a 45° angle. Special care was taken to minimize rounding of the edges and avoid surface scratches.

After separation, the fuel plates were drilled to reference the fuel core for subsequent homogeneity scanning. Two 1/8-in.-diam holes were drilled 23.750 ± 0.001 in. apart and 1/8 in. in from the ends of the plates in lots of three. The holes were not centered across the plates but were located 1.900 ± 0.002 in. and 1.750 ± 0.002 in. from the chamfered edge for inner- and outer-annulus plates, respectively. After being drilled, the plates were degreased in a vapor degreaser and the edges of the drilled holes were lightly deburred.

Fuel Plate Forming

Forming of HFIR fuel plates to close dimensional tolerances is one of the critical phases of fuel element manufacture, because it is related to successful assembly of the plates into fuel elements that have acceptable plate spacing. If the plates are not formed reproducibly and to the correct involute shape, the element assembly and obtaining of correct spacing will be difficult. Obtaining reproducibility in forming is complicated by both the involute shape of the plates and by the varying thickness of the cores.

The HFIR plates were formed rapidly and inexpensively to the shape shown in Fig. 6, p. 12, by a low-pressure modification of marforming, a technique commonly used to form relatively thin metal parts. In this process, a punch that has been formed in the proper shape to produce the contour desired for the fuel plate is mounted on the ram. The plate

to be pressed rests on a rubber pad in a holder mounted on the press base. The descending ram forces the plate into the rubber pad; the pad is then compressively loaded and forces the plate against the punch. Since the rubber is not confined on top, as is common in marforming, the pressure is limited to about 2000 psi. Using one press and set of dies, one operator can form plates at a rate of about one per minute.

The development of this method and its application to fuel plates for a different reactor are described elsewhere.[14] The method as used for HFIR is described below.

Forming Equipment

A specially designed punch and die assembly used for the plate forming was mounted on a 500-ton Baldwin hydraulic press as shown in Fig. 15. The die arrangement is shown in Fig. 16.

[14] J. H. Erwin, S. Peterson, and C. F. Leitten, Jr., Development of a Forming Method for Curved ATR Fuel Plates, ORNL-3983 (August 1966).

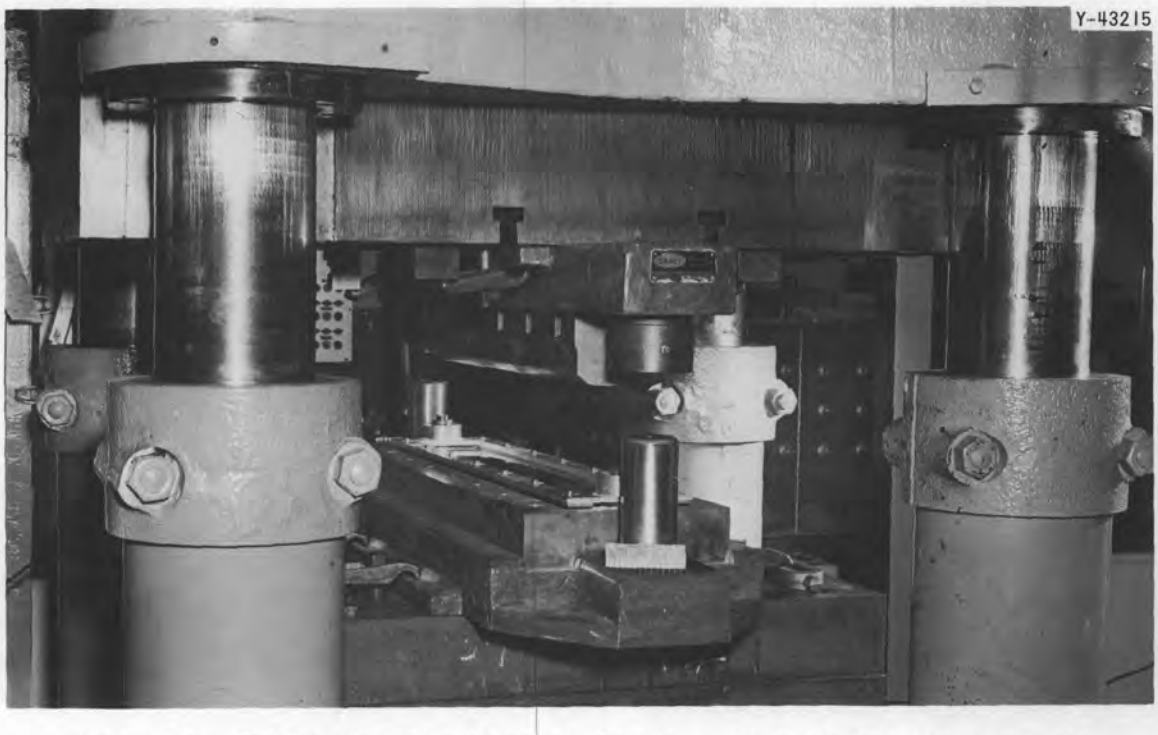

Fig. 15. Plate-Forming Dies in Press. Note contoured male die on upper platen and female die filled with rubber on bottom platen.

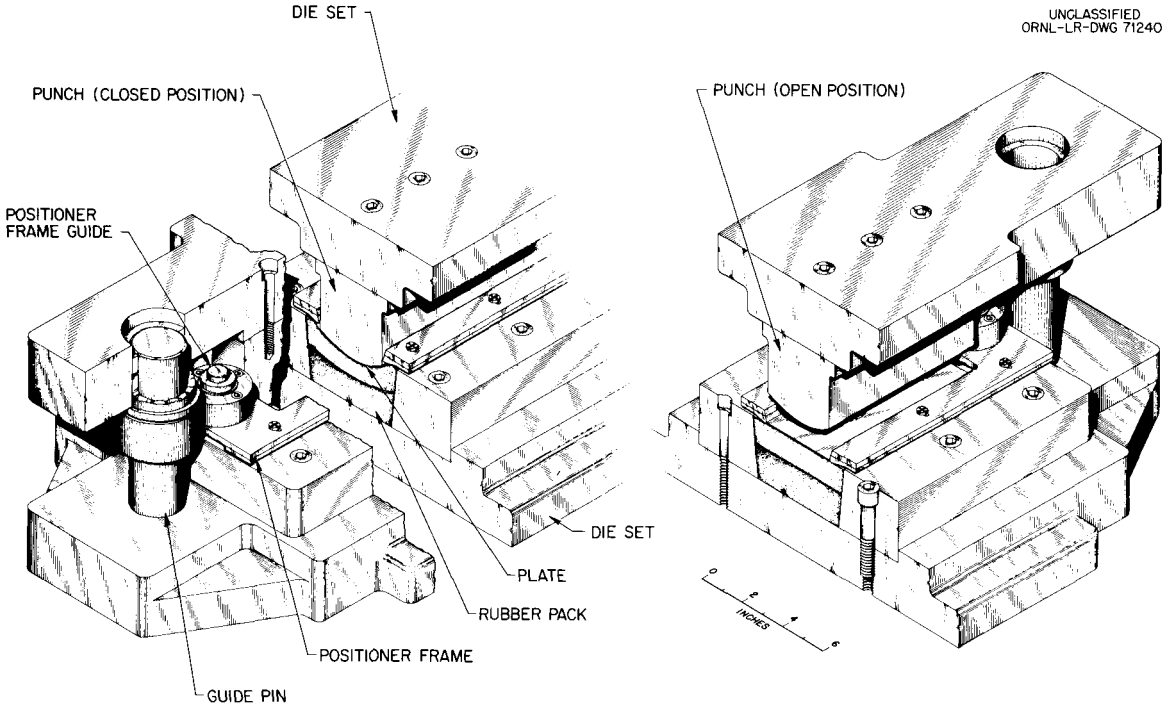

Fig. 16. Forming Die Assembly.

The rubber pad, which was the key to the pressing, was Maples Heights High-Temp manufactured by William A. Cratty and Associates, Cleveland, Ohio. The rubber was compounded to a hardness of 66 to 69 durometer and molded in individual pieces with thickness variations not exceeding 1/32 in. and width variations not exceeding 1/16 in. Two separate pieces of rubber were used — a base pad 4 × 26 1/2 × 1 3/4 in., which did not require replacement, and a wear pad 4 11/32 × 26 1/2 × 3/4 in. The thinner pad was reversed after 15 to 20 pressings and then replaced after a total of 40.

Different punches were used for the inner- and outer-annulus fuel plates. These punches were made from hot-rolled 3 1/2-in. square steel bar stock. The forming surface of the punch was contoured to a uniform involute cross section over the entire 26 1/2-in. length. To allow for the large amount of spring-back inherent in this process, the involute is generated from a 3.875-in.-diam circle for the inner-annulus plate, although the corresponding circle for the formed plate is 5.443 in.; for the outer-annulus plate, the two figures are 7.373 in. and 11.746 in.

The punch was mounted with the origin of the involute at an angle of 15° 28′ to the side of the punch for the inner annulus and 37° 46′ for the outer annulus.

Forming Procedures

Since neither the plate curvature nor the fuel distribution in the plate are symmetrical about the plate center line, the plate must be oriented properly with respect to the punch both for uniform forming and for reactor operation. Such orientation is obtained from the identification marks placed on the plate in the previous operations.

The first operation in forming was to align the fuel plate holder or positioner frame with the forming punch. The side supports of the holder were adjusted for a snug fit with the width of the fuel plate. This adjustment must be such that the plate edge is aligned parallel to the origin of the involute of the punch within 0.002 in.

The plates were formed one at a time. Each plate was placed in the holder with the identifying number in the specified position. The punch was activated and depressed at a rate of about 6 in./min until the load on the fuel plate reached 1600 psi. After approximately 30 sec elapsed time at full pressure, the press ram was returned to the starting position. The static charge on the plate was discharged and the plate was removed from the die. Especially during damp weather, the movement of the rubber on the metal parts produced sufficient static charge on the surface of the part to produce a disagreeable shock. Grounding the piece before it was removed eliminated this charge.

Excellent forming reproducibility was obtained once 20% cold work was specified for all plates before forming. However, small forming differences were encountered between various plate batches. Since the forming radius varied continuously along the involute, the forming differences were compensated by varying the position of the plate along the die involute. Moving the plate toward the center resulted in slightly less curvature. Such adjustments were used only on a batch basis, not for individual plates. Immediately after being pressed, the first plates in a batch were measured by the techniques discussed in the

next section and also were test fitted between side plates. If difficulty was encountered with either test, new plates were formed to a corrected contour. Such testing continued until a properly formed plate was obtained, and the plate position determined for that plate was used for the remainder of the batch.

To avoid distortion, care must be exercised in storing the formed plates; the less handling, the better. For temporary storage after forming, the plates were placed on a flat surface. Each specific plate was placed with the involute origin on the flat surface adjacent to the corresponding edge of the previous plate and with the curved section matched to that of the previous plate. One property of the shape of the plates is that this manner of stacking cannot result in a thickness of stacked metal greater than about 2.5 in., so excessive weight does not accumulate on the lower plates.

Using this technique, we could obtain excellent reproducibility in curvature. However, a problem was encountered in that the edges of the plate formed slightly differently from the remaining portions, as shown in Fig. 17. These variations will be spoken of as the base and lip angles of the fuel plates. The forming of these edges was reproducible and the variations extended only for very short distances into the plates. Rather than make the complex and expensive die corrections

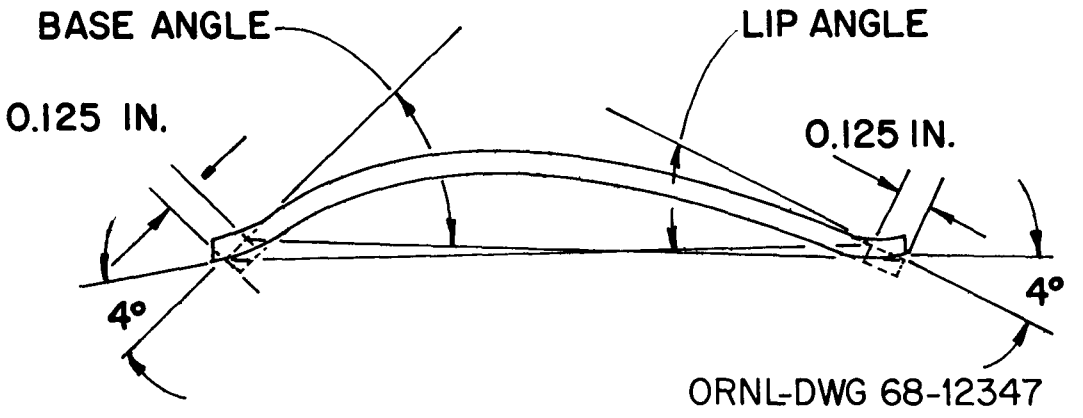

Fig. 17. Base and Lip Angles Measured on HFIR Fuel Plates, Showing Forming Difference at the Edges.

that would be necessary to correct the curvature, it was satisfactory and much simpler to measure the actual angles obtained at the edges and to machine the grooves in the side plates to fit them rather than ideally formed plate edges.

Fuel Plate Inspection

With the high performance and a smaller than usual margin of safety to burnout required of the HFIR, very tight specifications have been placed upon the fuel plates. To provide a high assurance that these specifications have been met has required a detailed and elaborate inspection program. This program has required the use of both conventional inspection techniques, usually to tighter than normal limits, as well as specially developed techniques. One of the more serious problems that might occur during HFIR operation would be the development of a hot spot within a fuel plate. Conditions that could contribute to such an event include excessive fuel loading, fuel segregation or inhomogeneity, excessive core thickness, lack of bond between the core and cladding, and improper orientation of the fuel core within the plate. Inspection techniques have therefore been included to guard against each of these defects.

Visual

The most conventional inspection technique used, but yet one which contributed heavily to the rejection rate, was visual examination of the fuel plate surfaces. This examination sought blisters, surface defects such as scratches or gouges, and embedded foreign material. While the rejectable blister size was stated as being 1/16 in., any defect that was suspected as a blister rejected the fuel plate.

A complete plate surface examination was made after each of the anneals and again just before the plates were inserted into the element. In addition, all operators and inspectors were instructed to watch the plate surfaces and to immediately reject a plate any time a surface defect was noted.

Dimensional and Plate Curvature

All the usual dimensions such as plate length, width, and thickness were measured on every plate. Since these are standard measurements, they will not be discussed further in these procedures. However, two special dimensional measurements were made to confirm that adequate plate curvature had been obtained, and these will be discussed in the following paragraphs.

The accuracy of forming plates and their conformance to the theoretical involute were determined by two types of measurements. Every plate was measured at several positions along the length and the width to determine deviations from the specified shape. In addition, we measured the base and lip angles of one of every five plates.

Deviations from the specified shape were measured with the jig shown in Fig. 18. With this instrument, a rack of dial indicators was moved across the plate surface. Three indicators were used for outer-annulus plates and four for the wider inner-annulus plates. These indicators moved first across a standard, where they were zeroed, and then across the plate surface; measurements were made at seven places along the plate. These measurements indicated deviations from straightness as well as curvature. A plate to be measured was placed in the jig

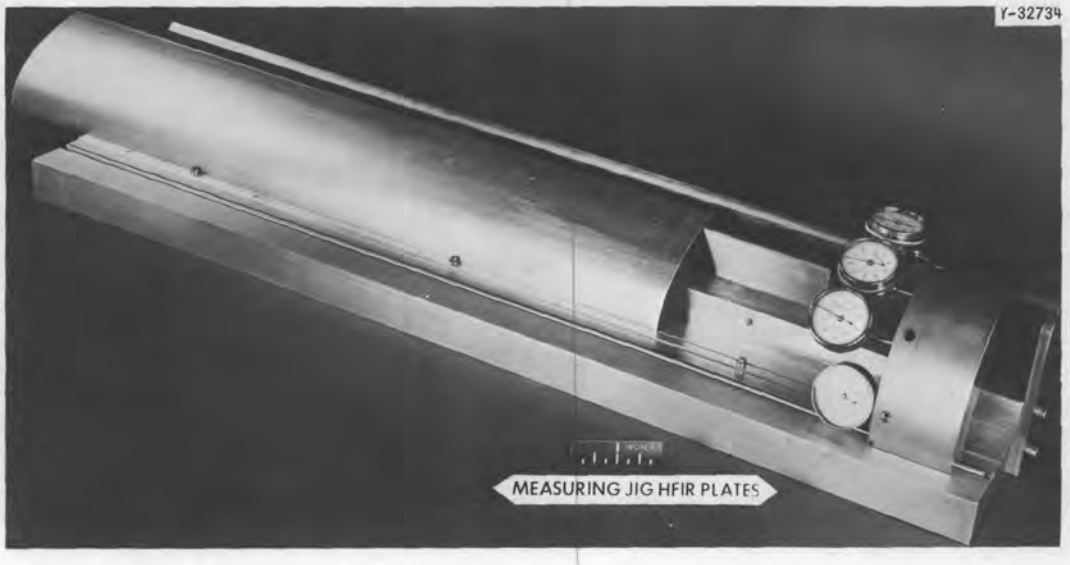

Fig. 18. Jig for Measuring Shape of HFIR Fuel Plates.

so as to rest on the back support and against the base support as shown in the figure. The center locking screw was turned to contact the plate and hold it against the support without strain. This allowed the plate to lie naturally against the two supports without distortion. Before the measurement, the dial indicators were adjusted to read 0.050 in. when in contact with the template; this arbitrary reading avoided the inconvenience of negative readings on plates. Acceptance of the plate required all readings to be within ±0.015 in. of the value for the true involutes for their radial positions and within 0.008 in. of each other.

For measuring purposes, the base and lip angles are defined as the angle between the tangent at a point 0.125 in. from the corresponding edge and the chord from that point to the opposite edge, as shown in Fig. 17. To permit measurement of these angles, a sheet-metal bar folder was adapted as the measuring jig, as illustrated in Fig. 19. To measure the base angle, the inner edge of the plate was held gently against a fixed surface by a vise. Tension adjustment screws were used so that the pressure was automatically duplicated for successive plates of a particular thickness. By use of measured rectangular reference blocks and depth micrometers, the position of the free edge relative to the throat of the bar folder could be determined as illustrated in the insert in Fig. 19, permitting calculations of the required angles. With this apparatus the base angles were measured in sections about 0.5 in. from each end of the selected plates. For acceptance, all values of the base angle were within 1° 0′ of the specified value.

To measure the lip angle, the plate was removed from the jig, turned 180°, and placed with the outer edge in the vise. Measurements were then repeated as explained above. The tolerances for the lip angles were 0° 10′ of the specified value.

Radiography – Fuel Core Outline

To ensure compliance with core outline and edge cladding requirements, all plates were fluoroscopically examined. This examination was in addition to the plate marking operation, which used the same fluoroscopic equipment. Maximum and minimum core lengths and widths as well

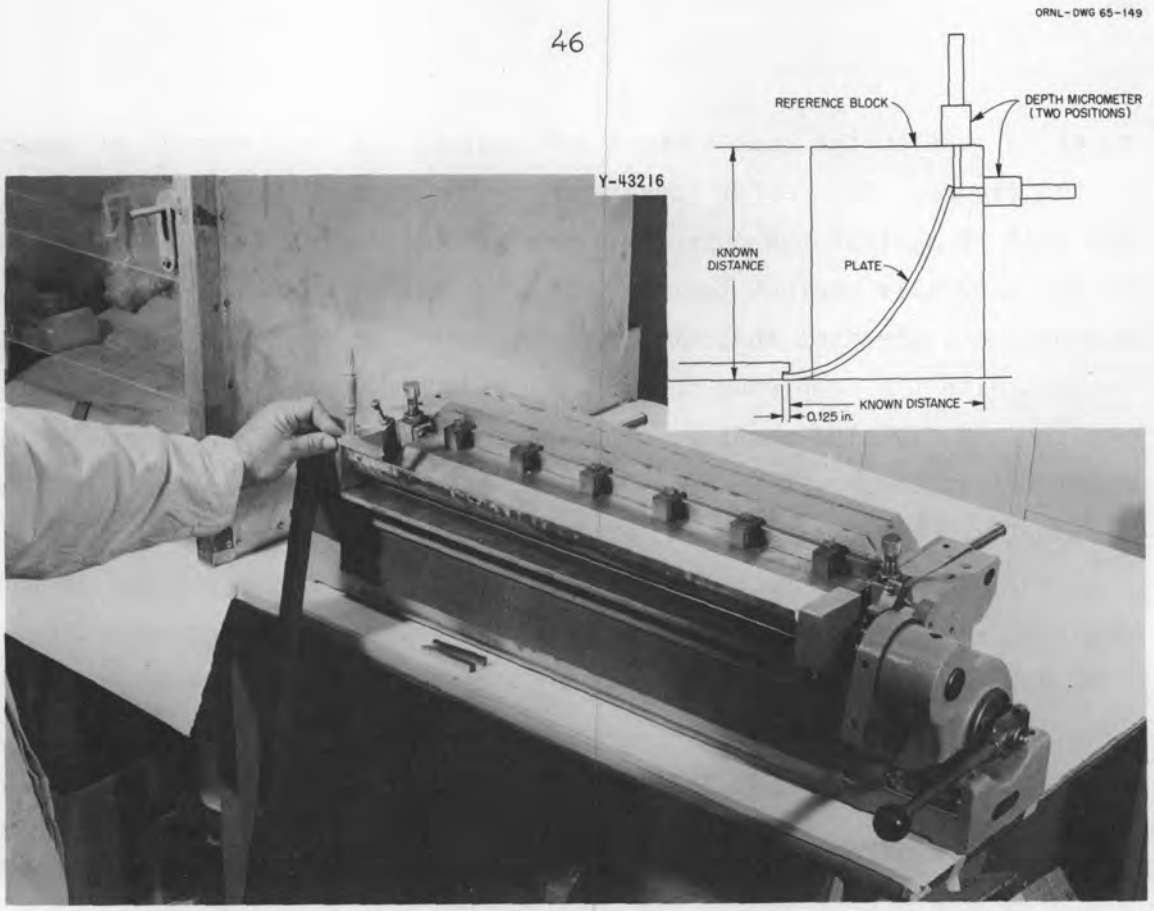

Fig. 19. Bar Folder Adapted to Measurement of Base and Lip Angles.

as maximum and minimum edge-cladding widths were determined for every plate on a go no-go basis. Inspection was by comparison in the fluoroscope with a standard template in which the maximum and minimum core outlines were marked by fine platinum wires. The inner edge of the plate was referenced to the wires by stop pins located in the template.

To provide a record of the actual dimensions of the plates in the first reactor core and also to qualify the fluoroscopic examination, all plates were radiographed for core outline. Three plates were radiographed at one time with a 300-kv-peak Norelco x-ray machine. Eastman Kodak type M film, 28 × 12 in., was used at a focal distance of 72 in. The exposure times were 75 sec at 100 kv and 6 ma. Films were first checked by comparing the outline to a prepared template, which was oriented by means of the image of the two positioning holes. Any radiographs that exhibited questionable core dimensions were measured with vernier calipers.

Core Hump Orientation

To enable proper heat distribution, all fuel cores must be oriented in the same manner, that is, all humps must point in the same direction and be located on the same side of the longitudinal center line. An eddy-current probe technique has therefore been developed to determine core orientation. This operation makes use of the relatively high electrical conductivity of the type 101 aluminum filler section as compared to the lower conductivities of the type 6061 frame and cladding or the fuel-containing portion of the cores.

A flat fuel plate was placed upon a smooth working surface, and a spring-loaded probe coil of a Magnaflux model FM 100 conductivity meter was placed upon the upper surface. The instrument was adjusted to provide an on-scale reading of the meter while near the plate edge. The probe was then gently slid across the plate surface maintaining full contact. Relative galvanometer deflections, illustrated in Fig. 20, were used to locate the filler portions of the fuel cores. During the transverse scan, large deflections indicated the plate surface that was in contact with the filler piece; otherwise there was little or no deflection. In addition, a minimum reading was observed at the minimum thickness of the filler piece, which occurred over the hump. An identification mark was then stamped at a designated corner location, which differed for the inner and outer plates.

Ultrasonic Nonbond Detection

Two inspection techniques were used to determine the presence of nonbonds in the fuel plates. The first test was previously discussed and was the visual blister check after the anneals. Plates passing this test were then subjected to a through-transmission ultrasonic test. The presence of nonbonds at the core-cladding, cladding-frame, and 6061-1100 aluminum interfaces and within the core was sought.

A commercially available pulsed ultrasonic device, the Immerscope, with a lithium sulfate transducer and receiver was used as the basic instrument. A 5-MHz sound beam was collimated to 1/16-in. in diameter. After being transmitted through the plate, the pulses were detected and

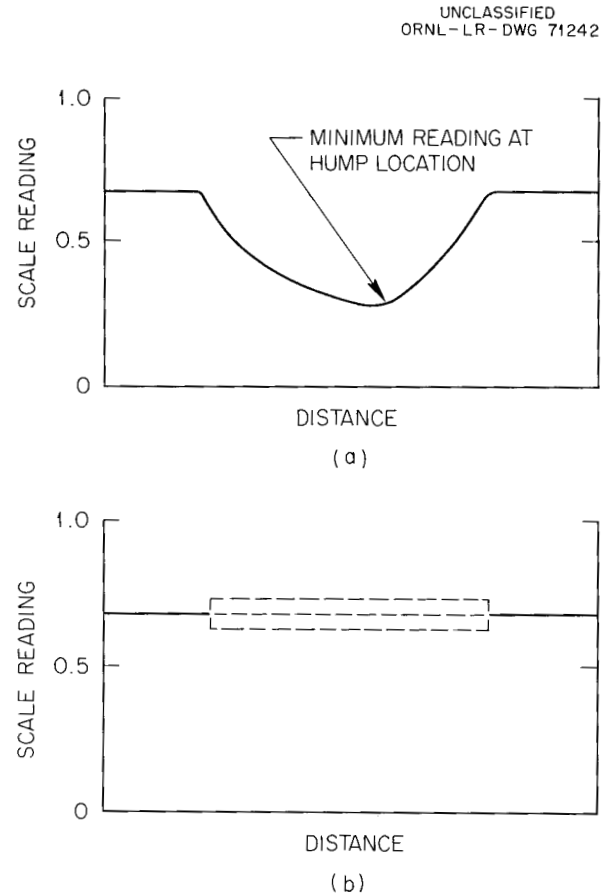

Fig. 20. Galvanometer Deflections for Typical Eddy-Current Scans on (a) Filler Section Surface of HFIR Fuel Plates, and (b) Fuel Section Surface.

displaced on the cathode-ray tube of the Immerscope. An electronic gating circuit monitored the amplitude of the received pulses. When a sufficient decrease in amplitude was noted (due to the presence of a nonbond), an audible alarm was actuated and an electrical writing signal was transmitted to the stylus on an electrosensitive paper recorder.

The plate was mounted in Teflon clamps in an immersion tank. It was held with the transverse direction (width) vertical and was moved in a longitudinal direction by a continuous roller chain drive. At the end of each longitudinal scan, the transducers were indexed vertically 0.050 in. before a reverse parallel scan was performed. Longitudinal scans and transverse indices were repeated until the entire plate was inspected. Scanning speeds in excess of 200 in./min were used.

The equipment was calibrated with the aid of a reference standard containing several scattered 1/16-in.-diam, flat-bottom drilled holes that had been plugged to simulate nonbonds. The gain of the Immerscope amplifier and the sensitivity of the gated alarm circuit were adjusted so that every 1/16-in. reference nonbond would be detected during use of the 0.050-in. index between longitudinal parallel scans at the normal inspection speeds. The standard holes were so spaced that the probe could not be exactly centered over all of them with the specified indexing, so the random locations of actual defects were reproduced.

Fuel Core Homogeneity

The controls on fuel section thickness, fuel concentration, and fuel segregation were combined into a single requirement in which the amount of fuel for a given plate surface area, actually a volume of a particular diameter and extending through the plate, was specified. With the change in fuel contour, this specified amount varied continuously across the plate. The surface area specified was a spot 5/64 in. in diameter. Fuel concentrations were specified on both a 5/64-in. spot and local average basis. The average was for a 5/64-in.-wide area whose length varied from 0.5 to 1.5 in., depending upon the uranium concentration proceding the spot. This average was actually a function of the time constant of a condenser that was continually charged or discharged, depending upon a voltage that was a function of the uranium concentration.

A through-transmission x-ray attenuation technique[15] was developed to measure the variations in fuel loading in the plates. With the specified amount of fuel varying with each scan, it was necessary to develop shaped standards to set the specified amount for each traverse. The machine compared this standard value with the values being measured at any time. A diagram of the basic system is shown in Fig. 21 and a photograph of the instrument is presented in Fig. 22.

---

[15]B. E. Foster, S. D. Snyder, and R. W. McClung, Continuous Scanning X-Ray Attenuation Technique for Determining Fuel Inhomogeneities in Dispersion Core Fuel Plates, ORNL-3737 (January 1965).

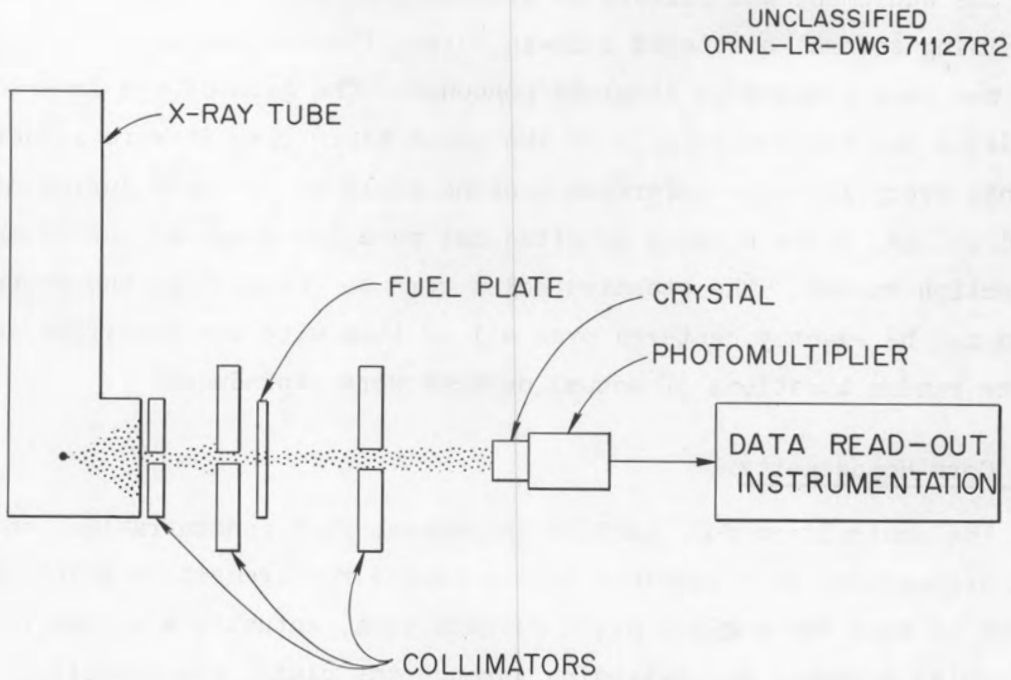

Fig. 21. Diagram of Fuel Plate Scanner.

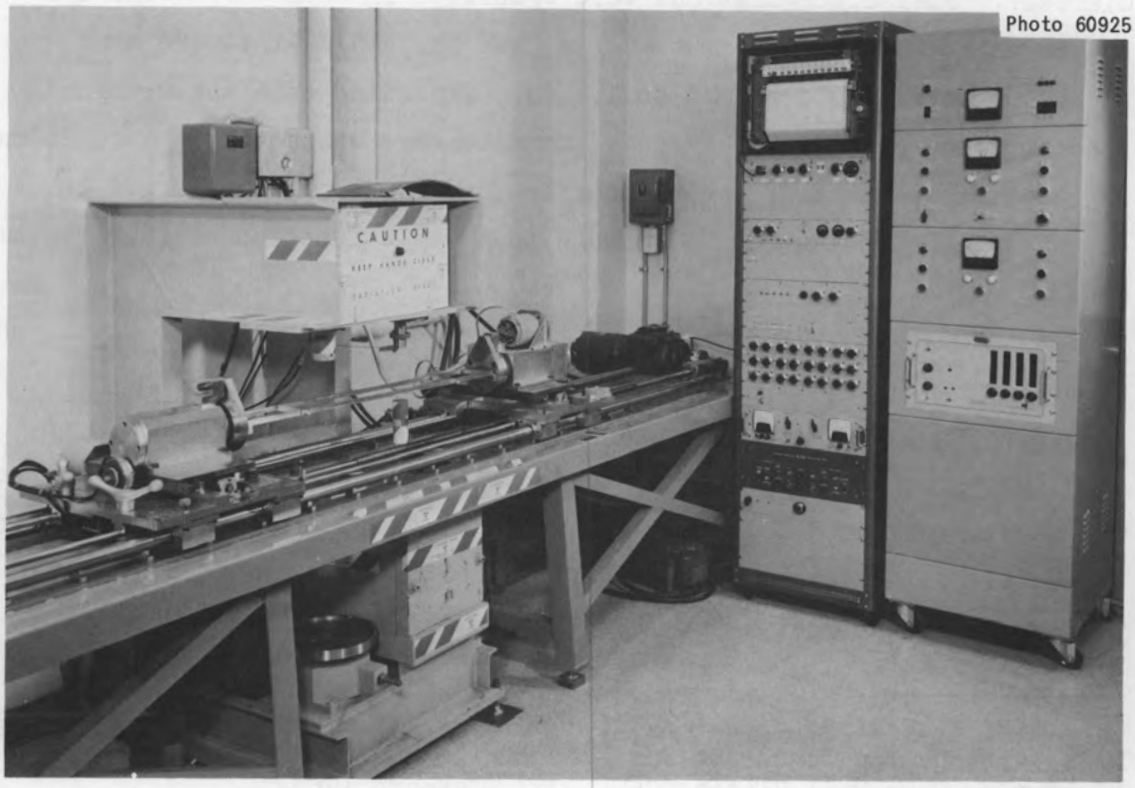

Fig. 22. Homogeneity Scanner and Instrumentation.

During inspection, a fuel plate was mounted horizontally in a frame between the head- and tailstocks of the scanner. The special reference standards were placed within the frame at both ends of the plate. X rays of 50 kv controlled potential from a Norelco MG 150 unit were transmitted from the tube (in a lead box under the scanner) through a narrow collimator before passing through the fuel plate. The beam was confined to a 0.080-in.-diam spot on the plate. The beam was again collimated after passing through the plate before being detected by a NaI crystal coupled to a photomultiplier tube and readout instrumentation. During inspection, the plate and standards were moved longitudinally at a rate of 240 in./min through the x-ray beam. At the end of each scan, there was a transverse index of 1/16 in. before a parallel return scan was made. The scanning and indexing continued until the entire fuel core had been inspected.

If at any time during a scan the signal from either the spot or average exceeded the limits set by the standards for that scan, an alarm was sounded and a mark placed upon a chart. The color of the mark depended on the specification being violated. Such a record showed where out-of-tolerance values existed but gave no indication of their magnitude. Plates were first inspected with standards set to reject at +30% for the spots and ±10% for the average. Plates that contained average violations were then rescanned in the questionable areas with +27% spot and ±12% average standards. If doubt still existed as to a plate's acceptability, it was rescanned at a slower speed of 64 in./min, and the actual concentration was plotted continuously. Since for clarity the limits used in the specifications apply only to the plate area operating at the maximum temperatures or flux, all scans for rejected plates were evaluated by a heat transfer expert before a final rejection was made.

ELEMENT FABRICATION

The second major area of the HFIR fuel element fabrication was that of assembly, welding, and final machining — namely, taking the finished plates and fabricating them into the completed elements. Each of these tasks involves preparation of components and inspection operations. The welding portion may be further divided into the following tasks:

(1) attachment of fuel plates to side plates, called type A welds; (2) attachment of combs, or type C welds; and (3) attachment of end fittings, or type B welds.

In the initial stages of HFIR development, three different assembly techniques were pursued. These included (1) sliding the plates between grooved side plates, (2) use of a central grooved side plate with a spacer attached to the outer edge of each fuel plate, and (3) use of a central grooved side plate with the outer edge of each fuel plate bent to act as a spacer. A variety of welded and mechanical methods were tried for attaching the plates. Varying degrees of success were achieved with all the techniques, and none could be classified as being unacceptable. For schedule and budgetary reasons, it became necessary to select one process and to concentrate on it. Although we probably could fabricate acceptable elements with other combinations than the ones selected, even with the benefit of hindsight the process selected still appears to have been the proper one. The fabrication of an element by the third of the above assembly techniques and a combination of mechanical fastening and welding has been described.[16]

Although the inner and outer elements differ in size and have different reference surfaces and wall-thickness requirements, they were manufactured by very similar procedures. For economy of presentation, we will treat the two fuel elements together when possible.

The fuel element assembly and welding techniques were very strongly influenced by the very tight specifications on water channel spacing. All the individual channel spacing measurements were required to be 0.050 ± 0.010 in., and the average for a minimum of three specified points and the two edges at any cross section must have been within ±0.006 in. A second major source of assembly problems was from the very tight tolerances specified for the diameters of the elements. Each inner element requires 171 fuel plates, an inner and an outer side plate, two

---

[16]R. J. Beaver, J. W. Tackett, J. H. Erwin, G. M. Slaughter, and W. J. Kucera, Initial Development of HFIR Fuel Assemblies, ORNL-4108 (October 1967).

inner side plate end fittings, one outer side plate end fitting, and five combs. An outer element requires 369 fuel plates, two side plates, two outer side plate end fittings, one inner side plate end fitting, and five combs. The side plates, the end fittings, and the combs all required special machining operations to achieve the necessary tolerances. These machining operations are discussed in a later portion of this report, although they must precede some of the assembly and welding steps. The fuel plates were fabricated by the techniques discussed above.

While identical procedures were used in fabricating the fuel plates for the third critical experiment and for the first reactor element, the assembly steps did differ. In the critical element the plates were removable, so no attachment welds were required. This permitted some relaxation in tolerances. The side plates were positioned by a special spider attached at the bottom. Different end fittings were also used. Since the critical element was for a special application and was assembled by procedures not applicable to a production-type operation, it will not be discussed any further in this section of the report.

Fuel Element Assembly

The individual components previously fabricated are assembled into a fuel element by the procedures outlined in Fig. 23. Care must be used since the fuel plates are so soft that they are easily deformed and also foreign particles are readily embedded within them. In addition galling is a problem since aluminum has to slide on aluminum with close tolerances. A striking point in the flow chart is the large number of inspection operations.

A very important contributor to the assembly of the fuel elements was the quality of the side plates. These components must be machined to the correct diameter (as described in a later section), have a minimum of ovality, and have all slots machined parallel and to a uniform and correct depth. Typical side plates with labels identifying the various features are shown in Fig. 24.

Since the side plates are so thin and easily deform even by their own weight, fixtures were designed to keep them round and concentric

ORNL-DWG 68-6242

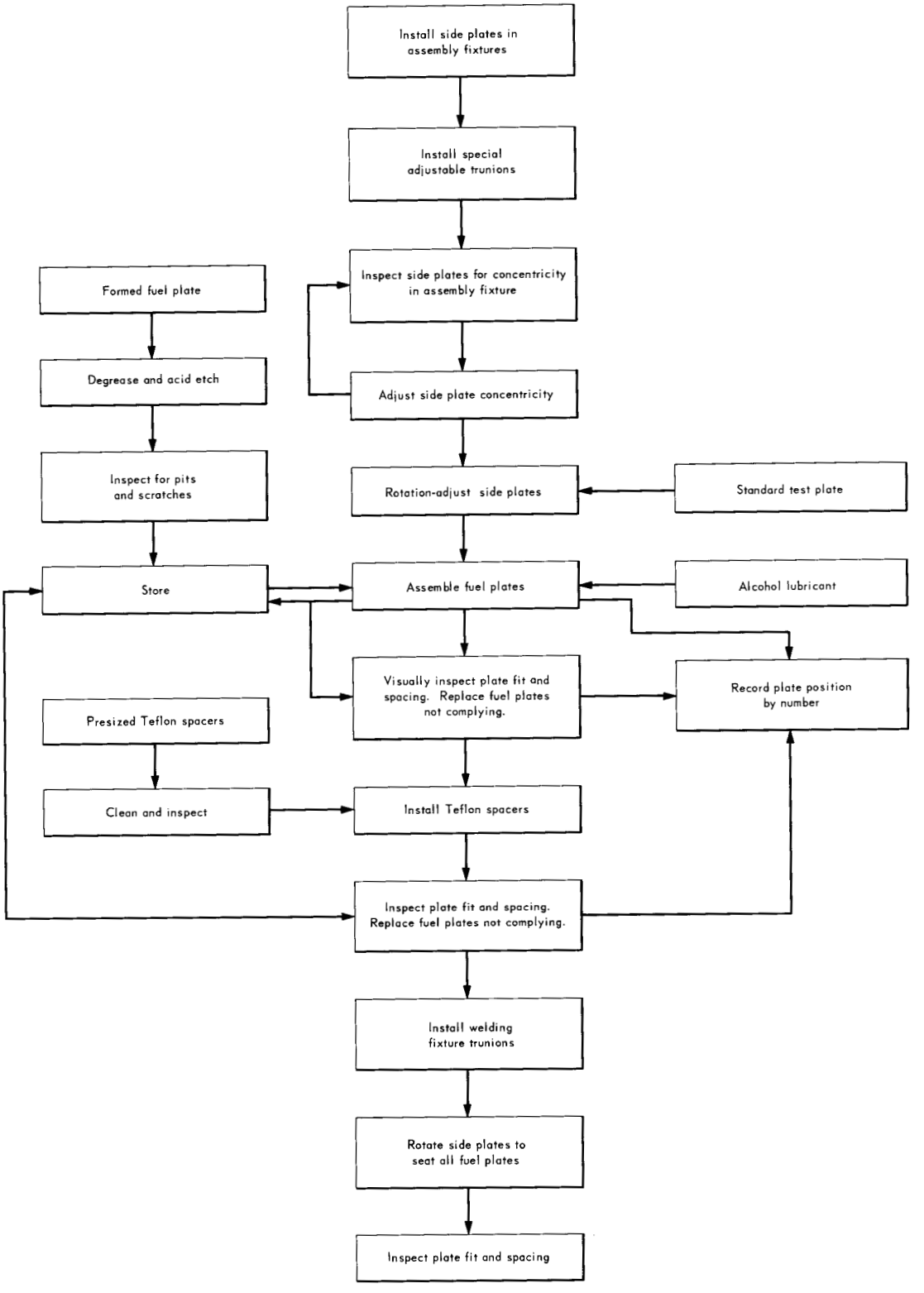

Fig. 23. Assembly of HFIR Fuel Elements.

Fig. 24. Side Plates and Assembly Fixtures for an Inner Fuel Element.

during assembly of the elements. These fixtures consisted of a solid bottom flange and a segmented top flange, both machined to fit the adapter shoulder surfaces of the side plates, as shown in Fig. 25. This figure shows both the spacer used at the top during assembly and the ones used at both top and bottom during welding. The diametral differences (approximately 0.100 in.) between the flanges and the side plates were taken up by Teflon shims that were tailored to meet the exact thickness required. The shims also alleviated the metal-to-metal friction encountered during subsequent operations. The welding flanges were designed to be an essential part of the welding fixture and to

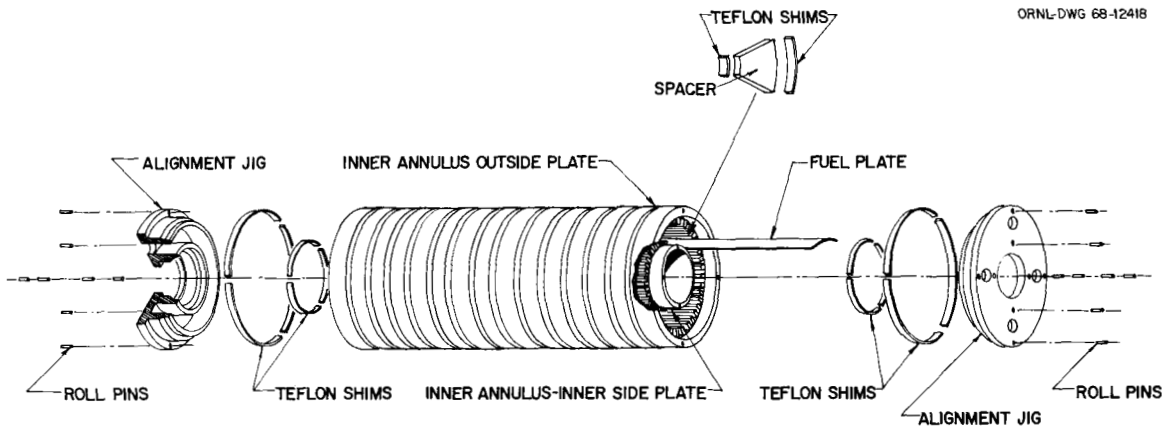

Fig. 25. Exploded View Showing Alignment Jigs for Assembly and Welding.

maintain the axial alignment of the fuel plates during welding. Their configuration was such that roundness and concentricity could easily be measured in process.

The side plates of an outer element were installed on the bottom assembly flange, and the top segmented flange was secured in place. The side plates were adjusted (rotationally), and a "standard test fuel plate" was snugly bottomed in the slots of both side plates. As a final check of the concentricity of the side plates, a standard test plate was trial-fitted into every 50th slot. To provide additional support, special trunions (the top one is visible in Fig. 26) were designed and constructed for use with the outer side plates. These trunions had radially adjustable shoes and were used to force these large side plates round in preparation for inserting the flange and to help hold them round during the subsequent welding steps.

The fuel plate loading sequence called for inserting plates in every few sectors around the element rather than working in sequence. After these scattered plates had been inserted, the upper flange segments were removed and the vacant positions were filled in order (Fig. 26). Immediately before loading, the fuel plates were given a final visual inspection for surface irregularities (pits, scratches, blisters, etc.). As the individual plates were loaded, we examined their fit into the side plate slots and their curvatures were compared

Fig. 26. Partially Assembled Outer Fuel Element Showing Trunion in Position.

with the curvatures of adjacent fuel plates. Fuel plates that did not seat properly, that were too wide, or that did not closely comply with the curvature of adjacent plates were not used. Alcohol was applied generously to plate edges and to the plate slots to lubricate and prevent galling. Galling between the plates and slots was always a serious problem because the plates were in the annealed condition, the edges of the side plate slots were sharp and often burred, and there was usually some mismatch between the base (or edge) angle of the plates and the side plate slot.

Only a small amount of plate spacing mismatch could be tolerated in the as-assembled condition; the variations shown in Fig. 27 are marginal. The mismatch shown could be corrected, at least partially, with Teflon spacers installed as shown in Fig. 28. The Teflon spacers were inserted

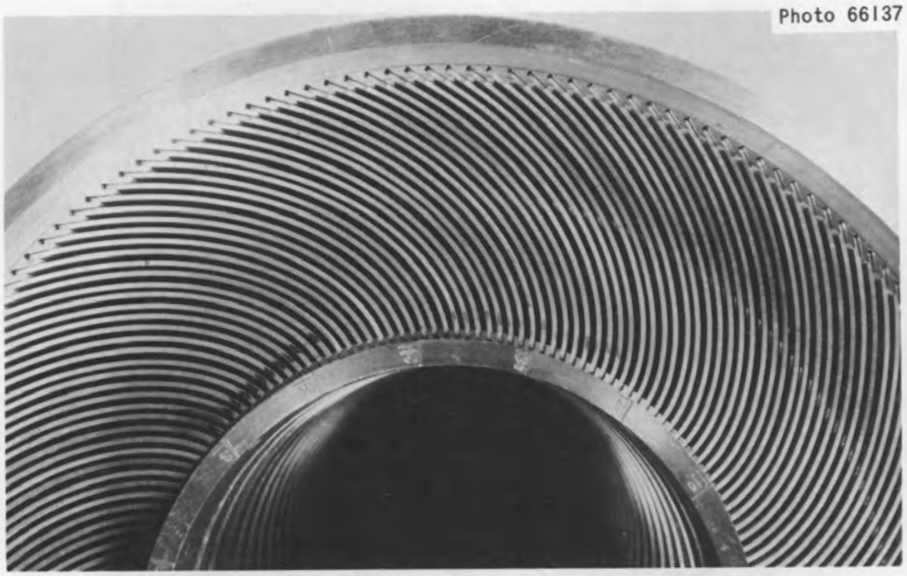

Fig. 27. Outer Element with all Fuel Plates Installed.

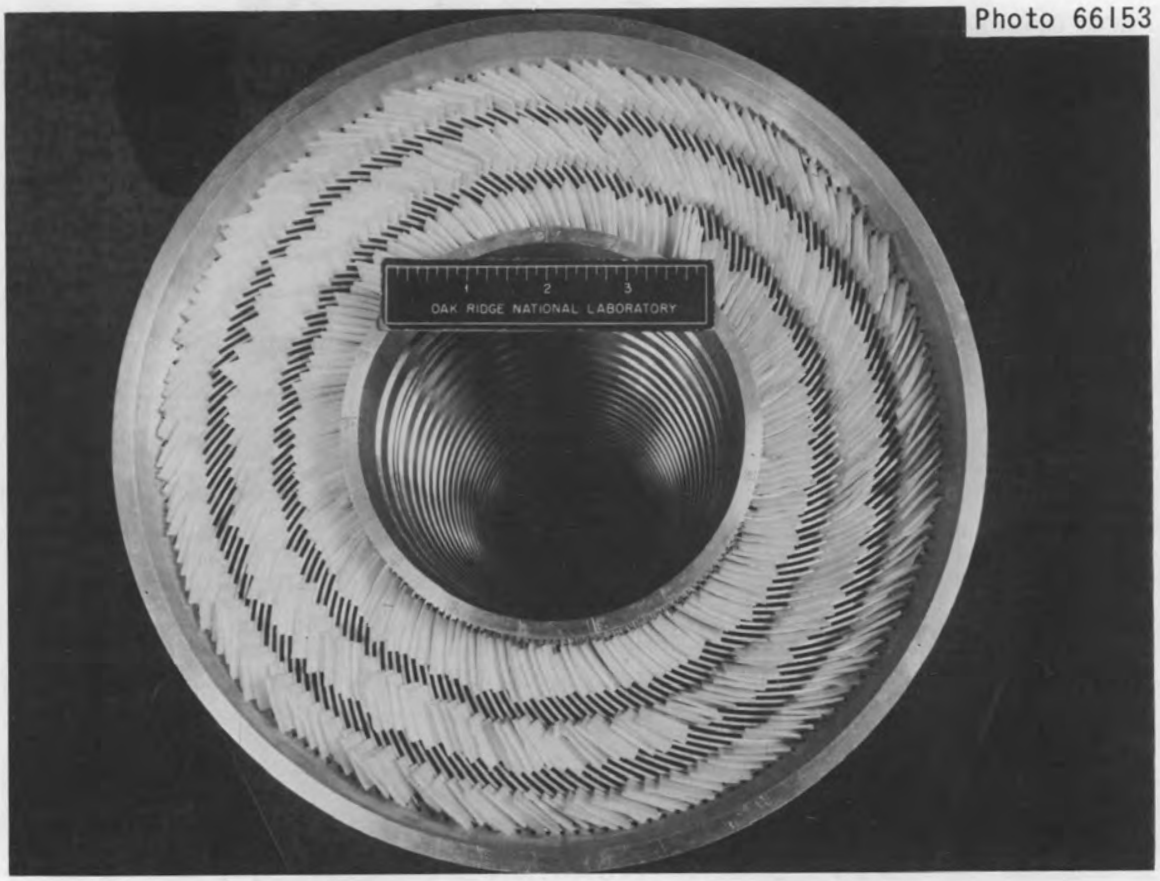

Fig. 28. Teflon Spacers in Inner Element.

the full length of the fuel element (approximately 26 in.) and ranged in thickness from 0.046 to 0.050 in. The thinner spacers maintained correct plate spacing during welding, while the thicker spacers were used to correct plate curvature in areas of narrow spacing. Uniform spacing of the fuel plates across the channels and from channel to channel were thus obtained. Experience at ORNL indicated the plate-to-plate reinforcement by the spacers to be very critical for obtaining good as-welded spacings.

After the Teflon was installed, the plate seating was visually inspected in the top, bottom, and midplane weld grooves of both the inside and outside side plates. Our experience indicated that some unseating (up to approximately 0.020 in. measured perpendicularly from the bottom of the slots) could be tolerated in the weld grooves of the outer side plate. However, essentially no unseating could be tolerated in the midplane weld groove of the inside side plates. The fuel plates were radially shifted to obtain proper seating in the grooves of the inside side plates; any plates that then did not meet the seating requirements with the outside side plate were removed and replaced. Figure 29 shows closeup views of acceptable and unacceptable seating conditions. Although the fuel plates all had essentially the same developed width, minor curvature differences in forming affected the chord length and edge angles and thereby the plate seating when the fuel plates were installed. Any variations in side plate dimensions or concentricities were also reflected in the seating problems. Plates having the longer chords prevented rotating the outer side plate (see next paragraph), thus preventing the seating of plates having the shorter chords. The Teflon spacers adjusted the plates so that all conformed to a common curvature, and thus greatly aided proper seating.

Following installation of the Teflon spacers and inspection of fuel plate spacing and seating, the top alignment flange was reinstalled. With the top and bottom flanges in place, the outer side plate was manually rotated in a direction opposite to the plate curvature to obtain the best possible plate seating. After rotation, the end flanges were locked (with respect to rotation) to the ends of the inner and outer side plates with roll pins bearing on the two ends as shown in Fig. 25, page 56.

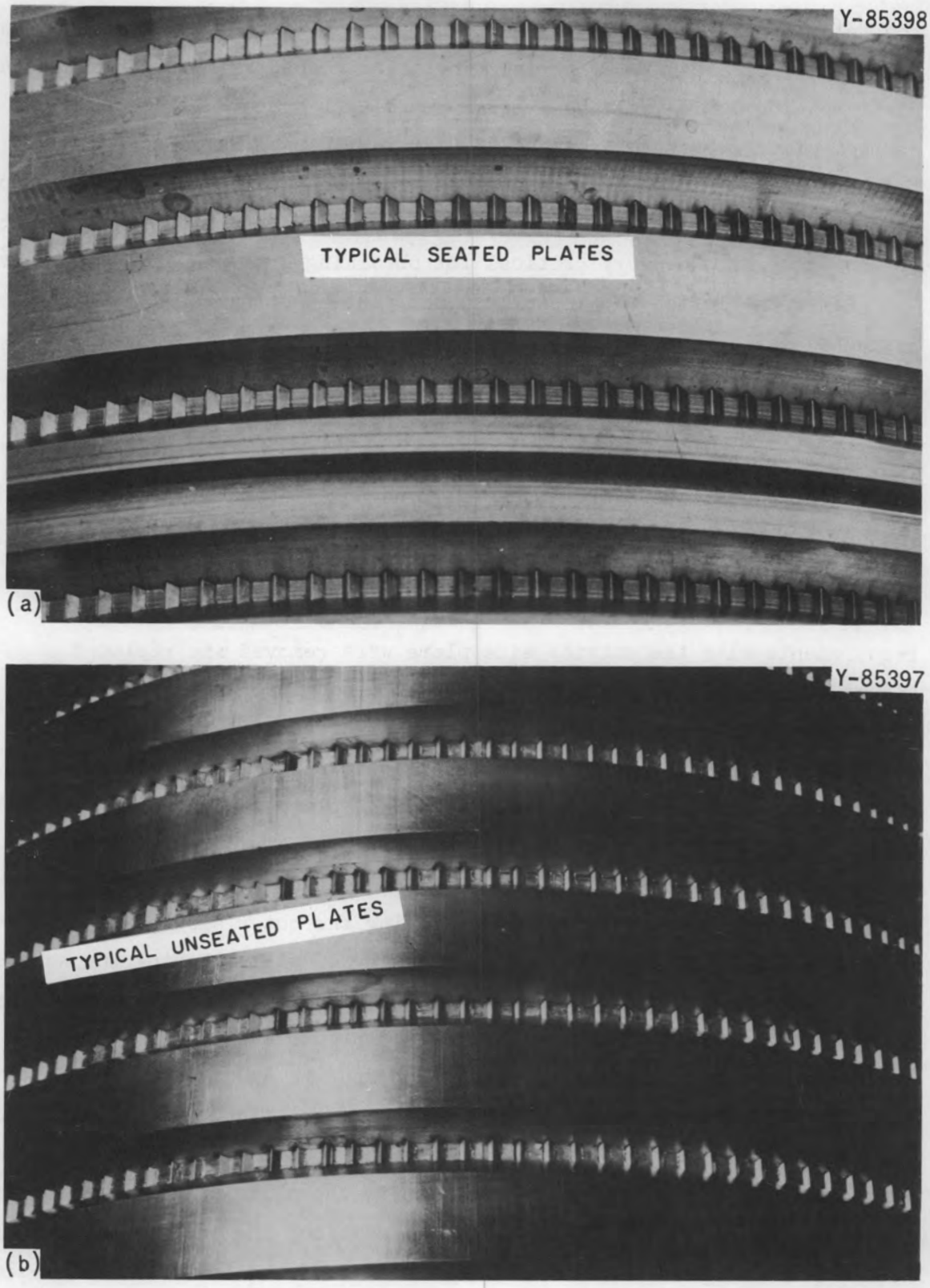

Fig. 29. Fitup of Fuel Plates in Outer Side Plate of Inner Element. (a) Acceptable fitup. (b) Unacceptable fitup, in which some plates are unseated by as much as 0.040 in.

Fuel Plate Attachment (Type A) Welds

One of the more unusual features of the HFIR fuel element design is the method for attaching the fuel plates to the side plates. As previously discussed, the fuel plates are slid into parallel slots cut into the side plates. They are then attached to the side plate by welding a small portion of the plate edge, which protrudes into a groove cut in the opposite side plate surface, to the side plate.

A major problem with this procedure is that no nondestructive test has been devised to show that the weld has been made properly. We must depend upon well developed and demonstrated procedures combined with quality control.

Welding

The welding was by a MIG (metal inert-gas) procedure in which circumferential welds were made at approximately 1-in. intervals down the side plates. Since we were dependent for control upon a previously demonstrated procedure and separate quality control specimens, it was necessary that the welds be reproducible. A fully automated and controlled welding machine was therefore developed and used. The procedures used for welding the fuel plates to the side plates are listed on the flow chart in Fig. 30.

Just before welding, the element was preheated in a drying oven to approximately 125°C. It was held at temperature for 2 hr to remove absorbed water and residual alcohol. Then fuel plate seating in all weld grooves in both the inner and outer side plates was visually inspected. If necessary, the fuel plates were shifted to maintain the full seating on the inner side plates. If excessive unseating (approximately 0.020 in.) of fuel plates in the outer side plates was visible, micrometer measurements were obtained. Unsuitable fuel plates were removed, replacement plates were substituted, and the preheating step was repeated. At this time, a final visual check was made of the concentricity of the inner and outer side plates and of the longitudinal alignment of the side plates. The latter was basically a check of the seating between the side plate ends and the alignment flanges. During

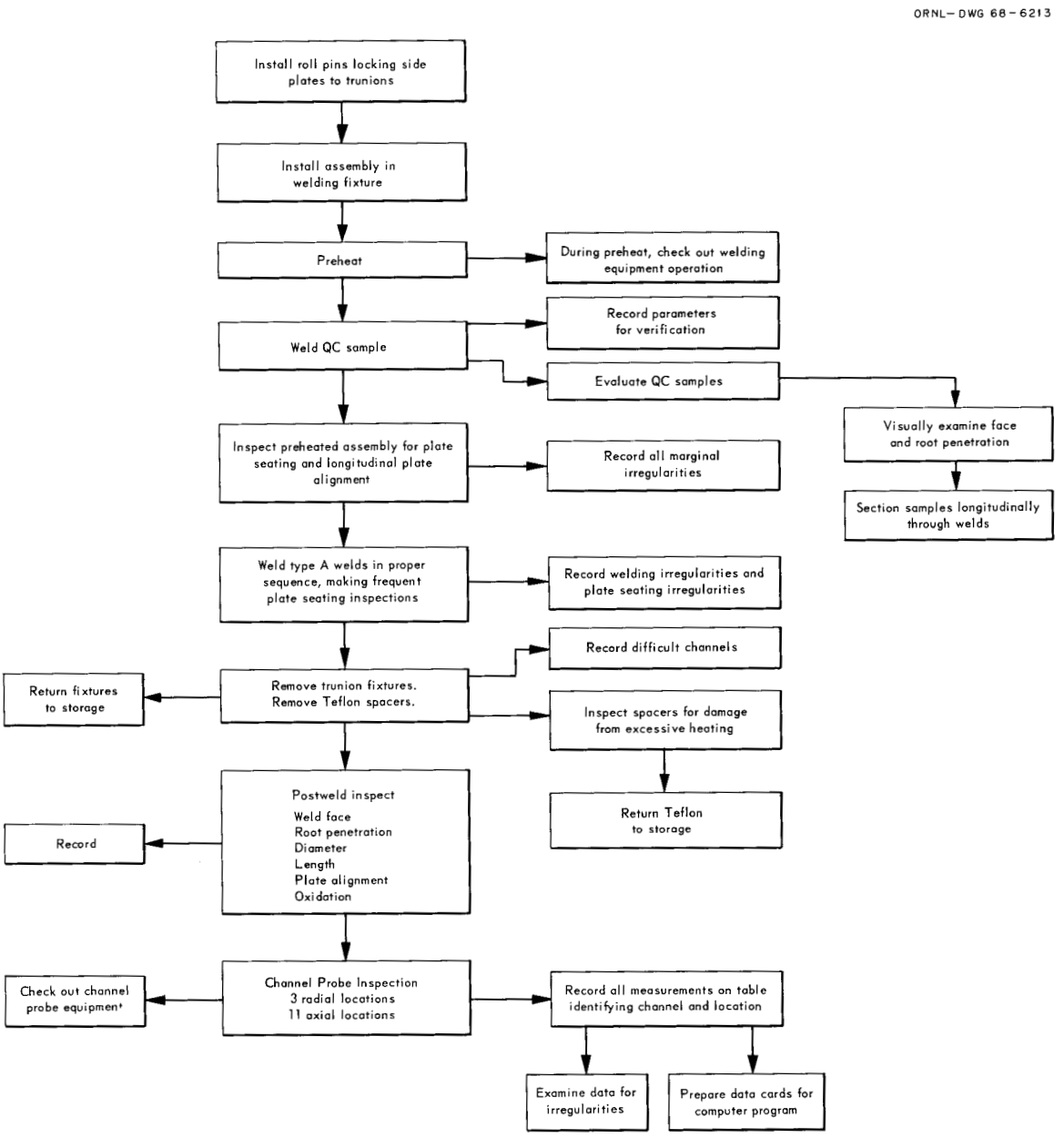

Fig. 30. Making of Fuel Plate Attachment (Type A) Welds.

preheating, the welding equipment was checked out and adjusted if necessary. The quality control samples were also welded.

The type A welds (welds between the fuel plate edges and the side plates) were then made. The welding sequence used on the first reactor assembly was as follows:

1st weld – inside seam 12
2nd weld – outside seam 12
3rd–5th welds – outside seams 13, 11, and 14
6th–8th welds – inside seams 13, 11, and 14
9th–12th welds – outside seams 15, 10, 16, and 9
13th–20th welds – inside seams 15, 10, 16, 9, 17, 8, 18, and 7
21st–28th welds – outside seams 17, 8, 18, 7, 19, 6, 20, and 5
29th–36th welds – inside seams 19, 6, 20, 5, 21, 4, 22, and 3
37th–44th welds – outside seams 21, 4, 22, 3, 23, 2, 24, and 1
45th–48th welds – inside seams 23, 2, 24, and 1

The welding parameters used in the manufacture of the first assembly are listed in Table 8. To aid discussion, the side plates will be identified by numbers as follows: 1, inner side plate of the inner annulus; 2, outer side plate of the inner annulus; 3, inner side plate of the outer annulus; and 4, outer side plate of the outer annulus.

Table 8. Welding Variables for First Assembly[a]

Side Plates	Current (amp)	Wire Speed (in./min)	Travel Speed[b] (in./min)
1 and 3	150	650	17.5
2	145	600	10.0
4	150	650	9.0

[a]Filler wire: 0.030-in. type 4043 aluminum, hermetically sealed, on 1-lb spools. Inert gas: welding grade argon. Side plate temperature limit: 90°C.

[b]Tangential velocity at the weld surface.

At the start of each weld seam and again approaching the end, these welding parameters were program-changed to meet the welding requirements peculiar to these positions. A typical welding cycle (that for side plate 4) is shown in Fig. 31. To initially deposit a small but increasing amount of weld metal and still obtain immediate weld penetration, the welding current for this side plate was set at the start at 170 amp, the wire velocity at 750 in./min, and the work travel speed at 40 in./min. Within 0.5 sec after "Arc On," both the welding current and wire velocity were simultaneously down-sloped to the normal welding values. Within 1 sec after "Arc On," the rotational travel speed of the fuel element was down-sloped to the normal welding value. At the end of the weld (after the weld start was overlapped by about 0.5 in.), the welding current and wire speed were down-sloped simultaneously to lesser values before the arc was extinguished. The down-slope program at the end of

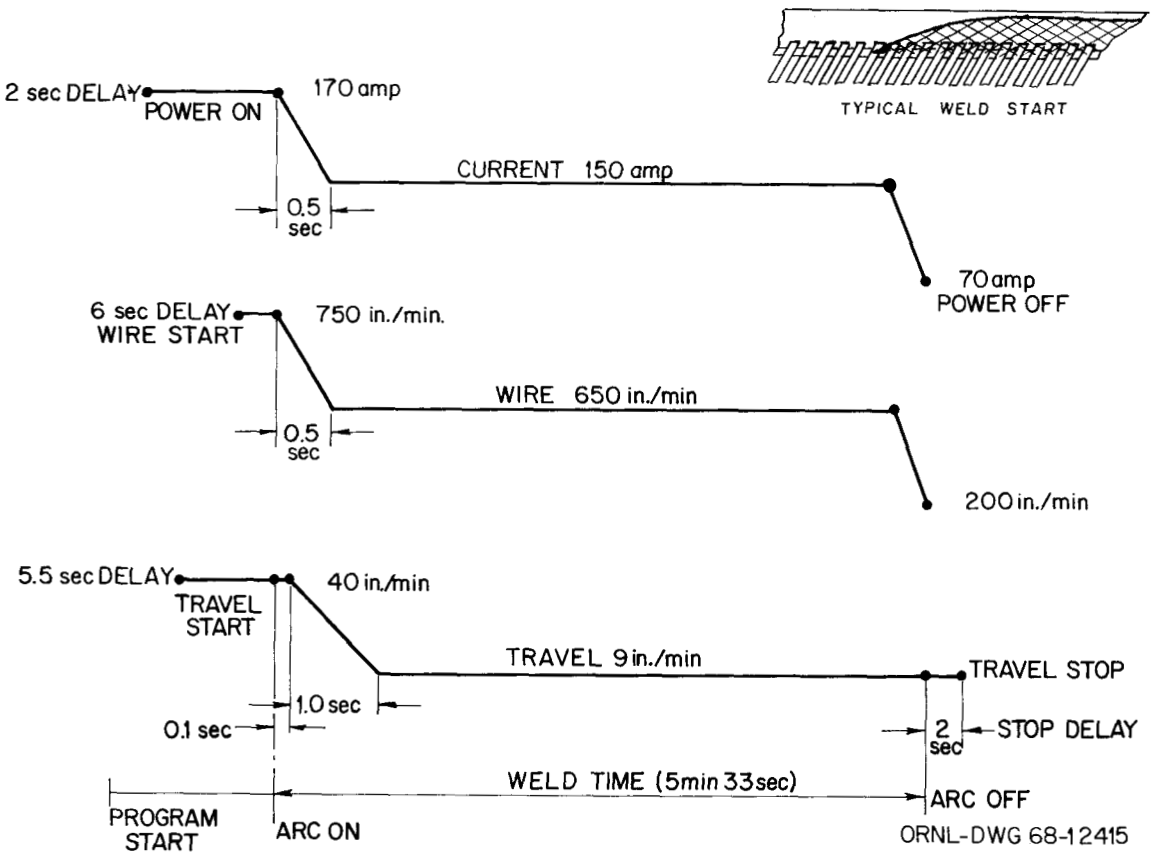

Fig. 31. Welding Program Cycle for Side Plate 4.

the weld permitted a reduction in the size of the puddle and thus minimized crater cracking. Similar programs with different values of the parameters were used to weld fuel plates to the other side plates. A diagrammatic sketch of the effect of the programmed start on the weld is shown in the insert of Fig. 31. Heat buildup in the side plate would have caused excessive penetration if the starting parameters had been continued even for a short time. Programming the welding parameters as described in Fig. 31 avoided excessive weld penetration. Also, the inclined surface produced by the programmed start permitted easy attachment to the last fuel plate (the plate edge just ahead of the weld start). Without this special program it was virtually impossible to consistently weld the first three to five fuel plates and the last two to three fuel plates.

During welding, the torch that was used for the welds on side plates 2 and 4 was tilted approximately 5° in the direction of rotation of the fuel element (into the weld puddle). This amount of tilting appeared to provide the optimum in weld penetration control. Also, the torch contact tube, which guides the wire as well as provides electrical pickup, was bent in the direction of rotation. Bending of the contact tube provided more reliable electrical pickup by increasing the contact area with the wire. For side plates 1 and 3, tilting of the torch was not possible; however, the contact tube was bent slightly as described above.

A general view of the equipment used to make the type A welds is shown in Fig. 32. The wire feeder power supply shown was used to operate both the outside and inside welding torches. The welding program control was equipped to sequence-program the current source, the wire feeder power supply, and the fuel element rotation simultaneously. The stationary welding torch (inside or outside) was positioned above a weld groove, and the fuel element was rotated about its own axis during welding. The direction of rotation was the same as the direction in which the plate edges pointed to assist in controlling weld penetration. An element in place with the two torches in position is shown in Fig. 33.

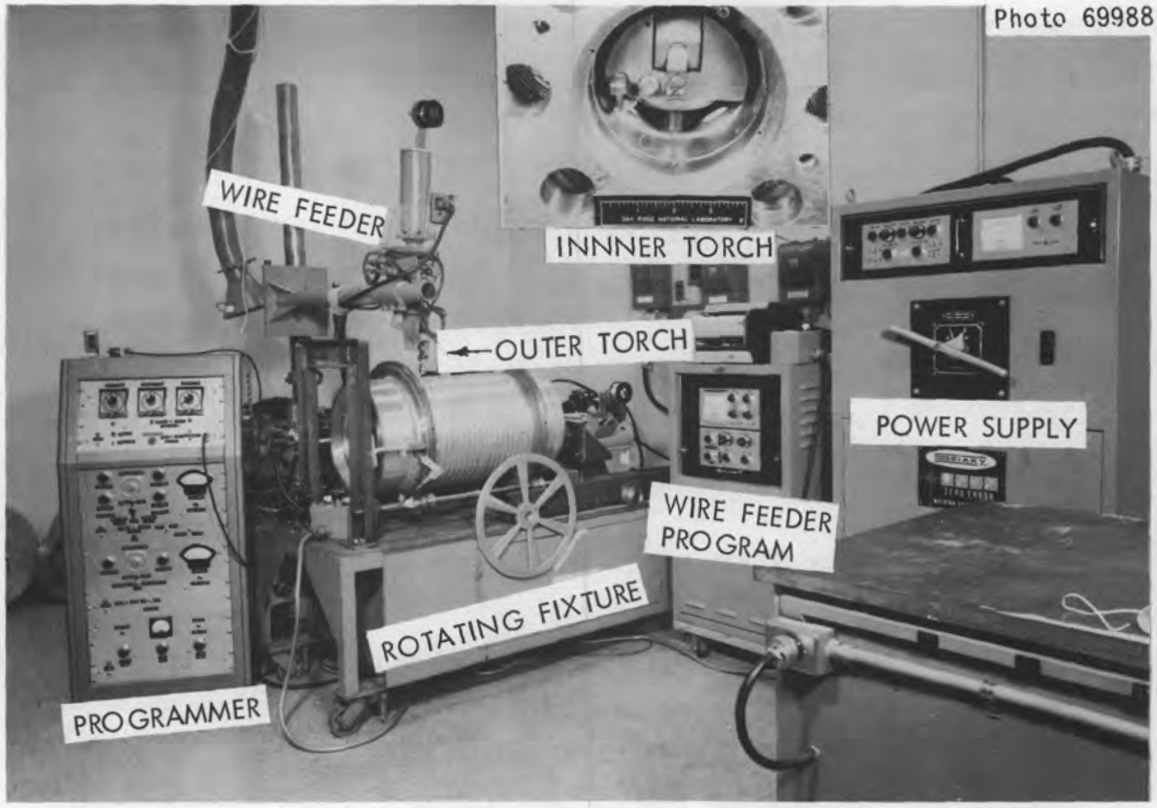

Fig. 32. Equipment Used to Make Type A Welds.

The welding power supply and wire feeder both employed feedback-operated servo-controls capable of less than 1% variation from the desired preset conditions. Early developmental work showed that equipment of this type was necessary to ensure reproducible results by compensating for variations in line voltage and other conditions and to minimize the effect of transient arc instabilities.

A conventional commercial welding torch was used to make the outside welds (several different types were used during the program, and all proved to be satisfactory). A special torch had to be designed to overcome the limitations imposed by the 4.8-in.-ID side plate 1 of the inner elements. A closeup of the inside welding torch is shown in the inset in Fig. 33. The torch is in position for making a weld on the inner side plate of the inner element. The compactness designed into the

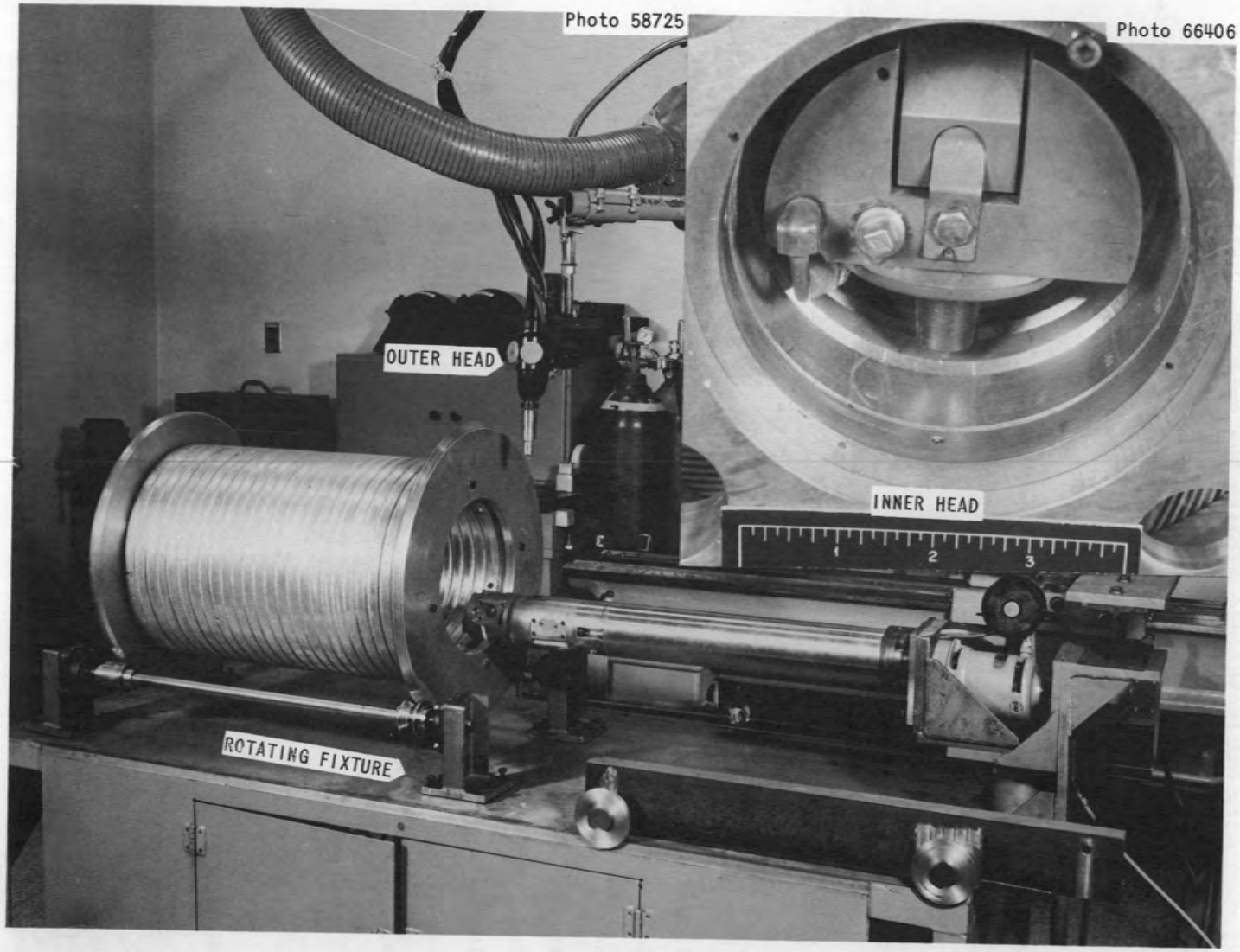

Fig. 33. Torch in Position for Welding Fuel Plates to Inner Side Plates of Fuel Elements. Inset shows torch in inner element.

torch is obviously needed. Figure 34 shows schematically the general construction of the inside welding torch. The wire-drive motor powered the wire-driving rolls through a shaft and worm-gear set. The wire-drive rolls, located immediately above the welding torch, pulled the soft 0.030-in.-diam aluminum filler wire from the spool through a transfer tube to the drive roll location. After going around the right-angle corner, the wire was pushed through the torch. The transfer tube was lined with a low-friction plastic material and the torch was water-cooled to prevent overheating. The specially designed inside torch performed quite satisfactorily and gave surprisingly few operational difficulties.

Positioning the inside torch accurately over the inside weld grooves, especially those in side plate 1, proved to be quite difficult. The axial location of the torch was very critical. The small bore of side plate 1 combined with the physical size and configuration of the inside welding torch made it almost impossible to properly locate the torch visually (even with mirrors) for the weld seams in the middle of the element. The method finally developed used a special located fixture. Fingers of the locating fixture were positioned in the groove to be welded. The torch was then positioned such that the torch end rested against the positioner set screw; in this position the weld nozzle of the torch was located directly above the center of the groove. The axial location of the torch was referenced on the torch carriage, the

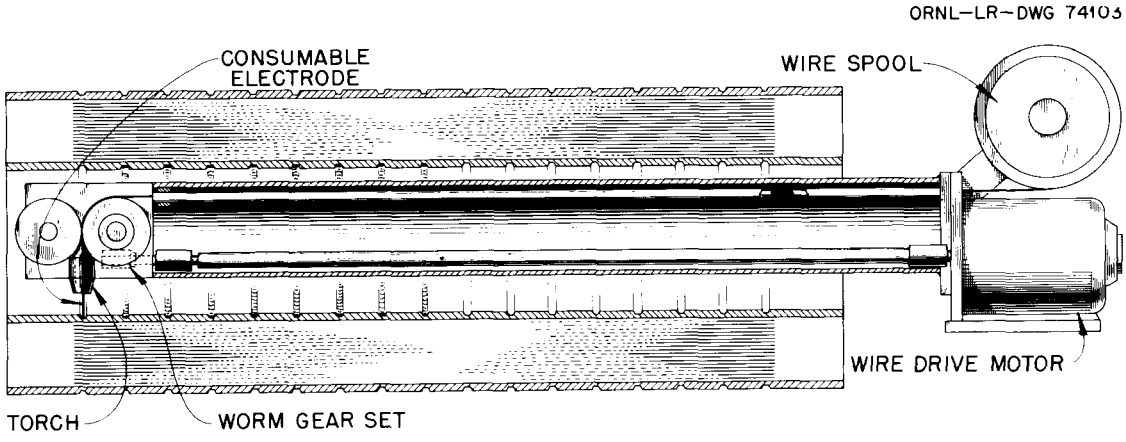

Fig. 34. Schematic Drawing of Inside Welding Torch.

torch was moved out of position, and the positioner was removed. The torch was then relocated with the marked external carriage reference.

Postweld Inspection

After the type A welds were completed, the Teflon spacers were removed and the fuel element received a postweld inspection. This inspection included (1) visual examination of the weld face, (2) visual examination for excessive penetration at the root of the weld, (3) measurement of diametral and axial shrinkage, and (4) measurement of plate spacing.

Visual examination of the weld faces provided the best means of evaluating the welds. The characteristics of the surface (contour, evenness of weld bead ripple, undercut, etc.) indicate the general quality of the welds. An undesirable or irregular physical appearance of the weld face reflected irregularities in the welding parameters. Furthermore, welding parameter irregularities indicated the possibility of irregularities in penetration plate attachment, or both. It must be recognized, however, that there is no absolute guarantee of fuel plate attachment. Metallographic sectioning of the qualification and quality-control specimens provided the best means for determining this. Figure 35 compares a typical appearance of the face of an unsatisfactory weld seam with that of a satisfactory weld.

Two techniques were avilable for determining overpenetration in the welds. During welding, the Teflon spacers in each channel had been positioned immediately adjacent to the underside of the side plates; overpenetration or even full penetration would overheat them sufficiently to cause local discoloration. As it was removed, the Teflon was examined for discolored areas, and suspect channels were marked for closer examination. Observing the undersides of the welds by looking into the channels illuminated from the opposite end readily revealed any overpenetration. It was obvious from the metallographic examinations that very close control of variables was required to avoid either overpenetration or inadequate plate tie-in.

The outside and inside diameters were measured with a Pi-tape and recorded to determine the overall diametral shrinkage pattern experienced.

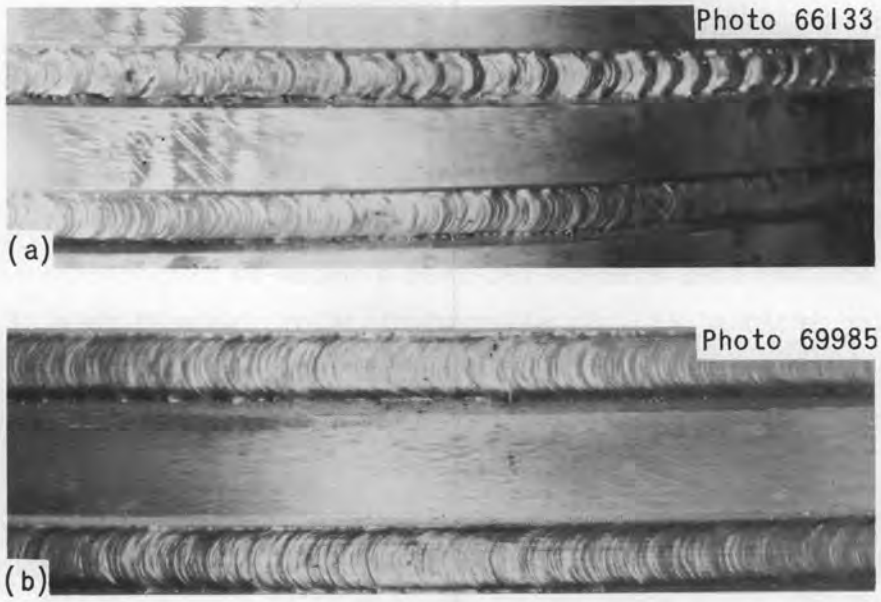

Fig. 35. Appearance of Weld Seams. (a) Unsatisfactory seam. (b) Satisfactory seam.

The lengths of the inner and outer side plates were also measured to determine the axial shrinkage. In general, no unacceptable diametral or axial shrinkage was experienced with the fuel elements welded at ORNL.

Fuel Plate Spacing Measurements

At this stage in the manufacturing sequence, the plate spacing of the fuel elements was determined. These measurements were more easily obtained at this stage than later since the channels were more exposed. Experience showed that measurements obtained at this stage were valid since duplicate measurements obtained on completed elements indicated that no measurable changes occurred during the intervening steps. Spacing was measured with a special probe, which determines the change in eddy currents induced by a coil as a function of plate spacing.[17]

Plate spacing was measured in every channel at 11 axial and 3 radial locations. Data were tabulated and later transferred to IBM punch cards for computer analysis. The computer was programmed for a plate spacing

[17]C. V. Dodd and R. W. McClung, Fuel Element Coolant Channel and Other Spacing Measurements by Eddy-Current Techniques, ORNL-TM-129 (Mar. 20, 1962).

average at each axial location of every channel, for a summary computation of the individual measurements, and for a summary of the average calculations. The data obtained from the fuel elements made for the first reactor core loading are presented in a later section. Figure 36 shows an end view of the inner fuel element after the Teflon has been removed. Both the photograph and the spacing measurements show that excellent plate spacing control had been obtained and the tight tolerances had been met.

Welding Quality Control Testing

In lieu of a nondestructive method for testing the integrity of type A welds, process control combined with quality control (QC) samples was used. Three different types of quality control samples were required

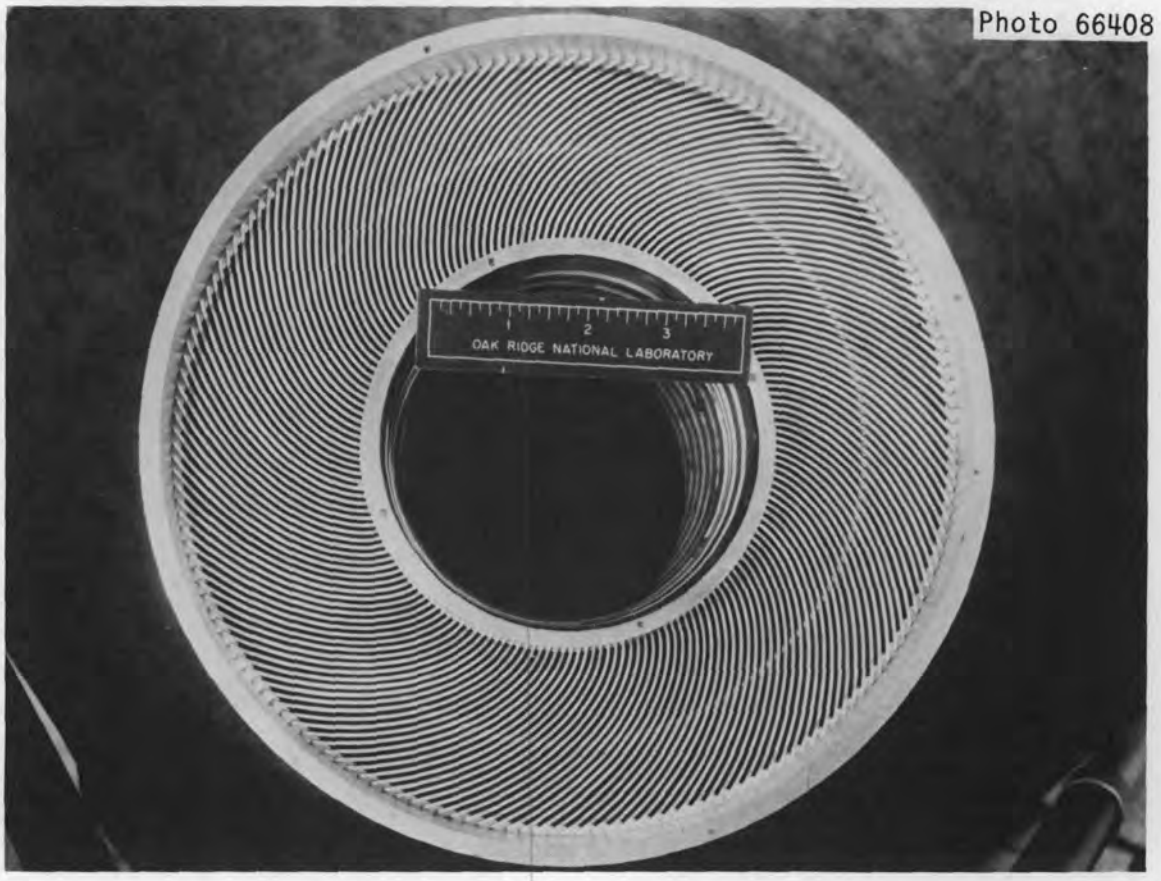

Fig. 36. End View of Inner Element after Welding and Removal of Teflon. Excellent spacing control is evident.

to adequately duplicate the conditions found in the four side plates, a single sample being used for both inside welds. Since close process control was used and the QC joint configuration essentially duplicated the corresponding fuel element joint configuration, the weld quality was representative of the quality in the element.

The primary differences between the three samples were (1) differences in the angle between the fuel plates and side plates (80° for side plates 1 and 3, 33° for 2, and 45° for 4) and (2) differences in the root thickness (0.100 for 1, 2, and 3 and 0.075 in. for 4).

The QC samples were welded immediately before the element with the same equipment used except for the travel mechanism, which was planar for the QC samples although rotational movement was required with the elements. The two devices were made as nearly identical as possible. Each weld seam on a QC sample included at least one weld start and an overlapped weld stop. This was accomplished by starting the weld in the center of the groove. The welding parameters used were those listed in the type A welding procedures. The welds were examined visually for weld face irregularities and excessive root penetration and metallographically for weld penetration, fuel plate attachment quality, and porosity.

Installation, Welding, and Inspection of Combs

After the plate spacing measurements were completed, combs were installed on both ends of each element. A flow diagram for the installation and inspection of the combs and end fittings is presented in Fig. 37. The maching of the combs is discussed later.

The flat as-machined combs were manually formed to the required radius and then trial fitted to the end of the fuel element. If the trial fit was satisfactory, all but 1/16 in. of the as-machined 1/2-in.-wide backing was removed and the combs were installed.

The as-installed combs were inspected for fit, tooth alignment, and diameter. An interference fit between the comb tooth and adjacent fuel plate surfaces was required to avoid welding complications. If an interference fit did not exist, the comb tooth would melt completely and

ORNL-DWG 68-6210

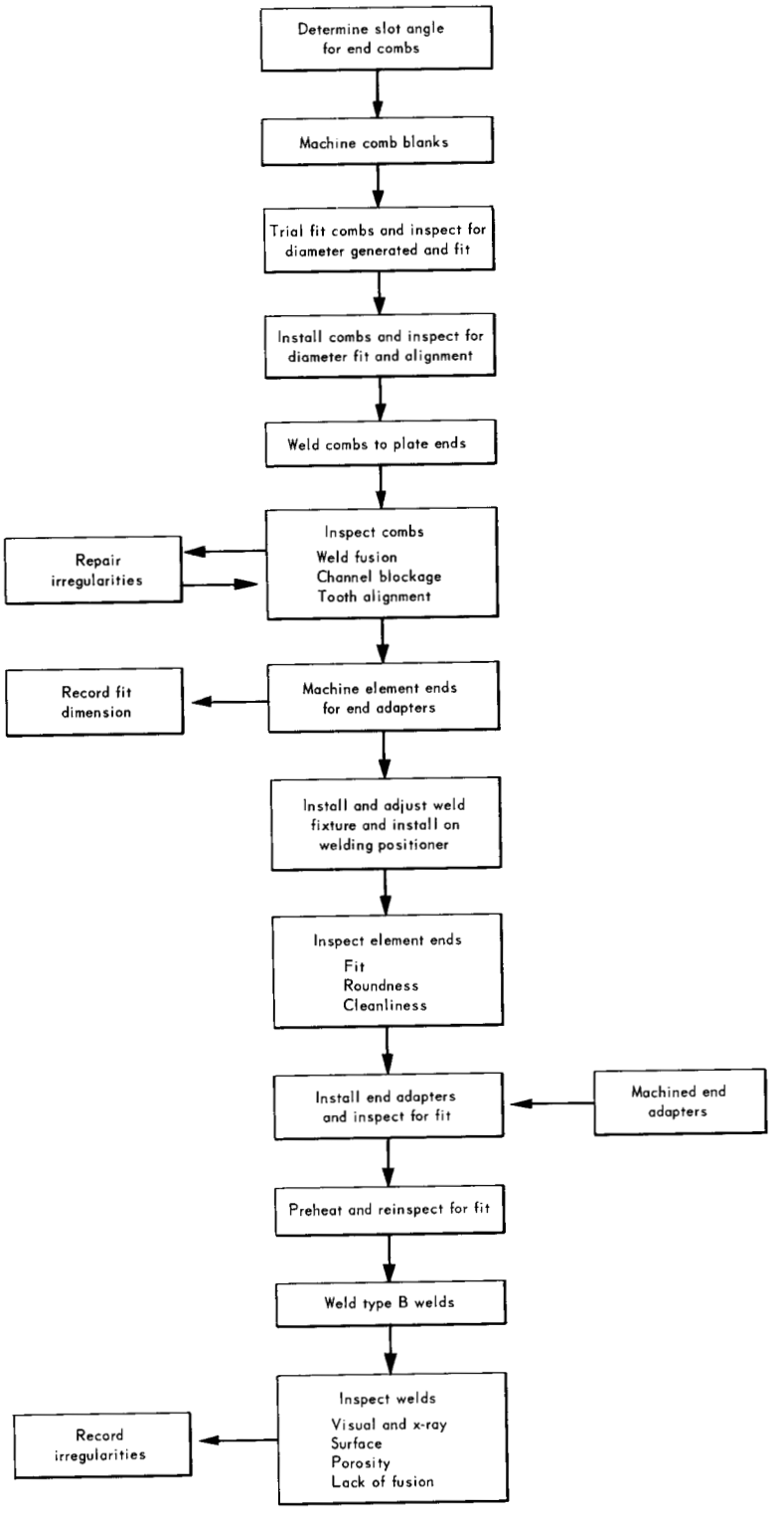

Fig. 37. Welding of Combs and End Fittings.

either coalesce onto the backing or drop into the channel. We sometimes needed to realign comb teeth to minimize blockage of the channels. We manually welded the combs to the fuel plates using approximately 50 amp ac at an arc voltage of approximately 15 v.

After being welded, the combs were inspected for excessive melting of the teeth, weld cracks, and comb width. Channel blockage of more than 0.15 in. by the top combs was removed with side-cutting files. Channel blockage of 0.25 in. was allowed for the bottom combs. A closeup of typical top combs of the outer element after welding is shown in Fig. 38.

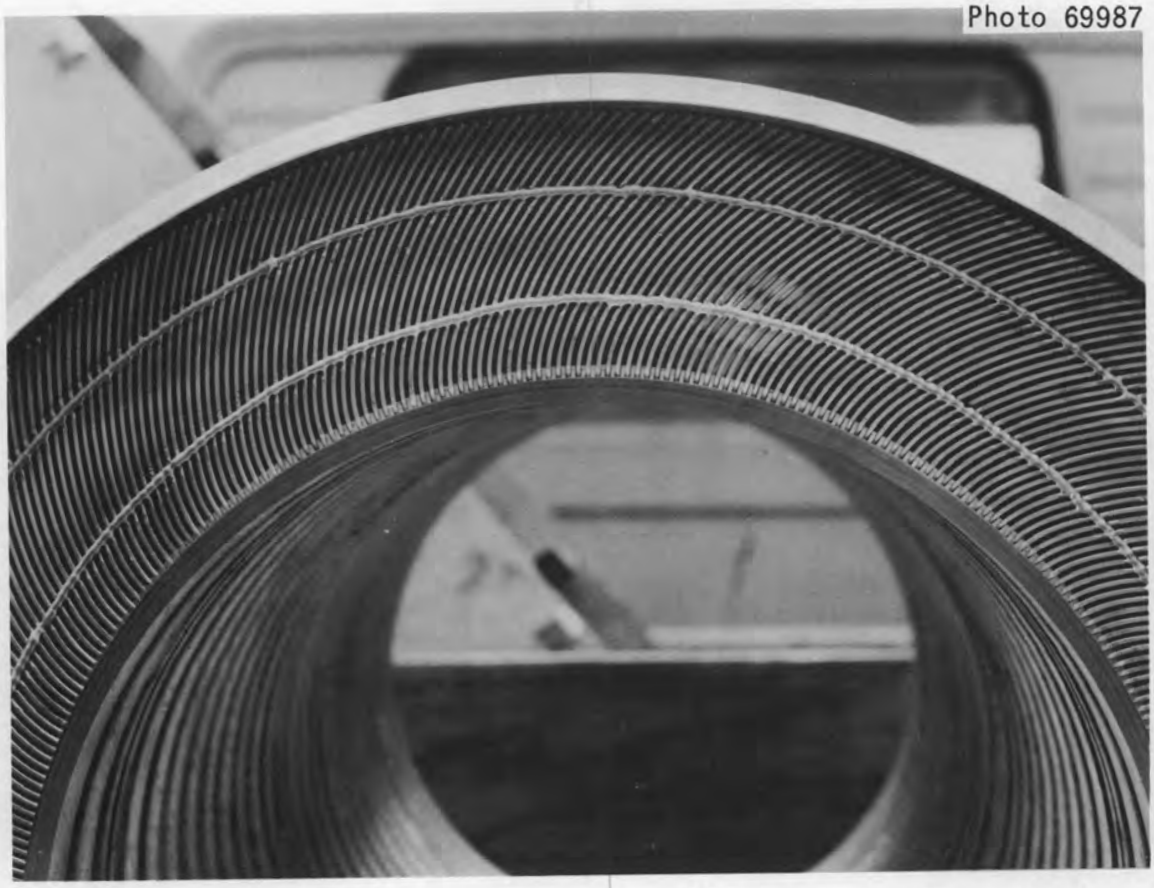

Fig. 38. Typical Top Combs of Outer Fuel Element After Being Welded.

Installation of End Adapters

Extensions with specially machined fitting and alignment surfaces were attached to the upper ends of all side plates and to the lower ends of the inner surface of the inner element and the outer surface of the outer element. These adapters positioned the elements within the reactor and served as water flow guides. The end adapters were installed by MIG welds made with the same equipment used for the fuel plate attachment welds.

Although differences existed in the actual shapes of the end fittings, similar techniques were used for their attachment. The installation procedure was included in the flow chart of Fig. 37. As shown in Fig. 39, the end adapters were attached with a slip-on joint that provided for a 60° groove weld. The weld groove was formed by the end of the fuel

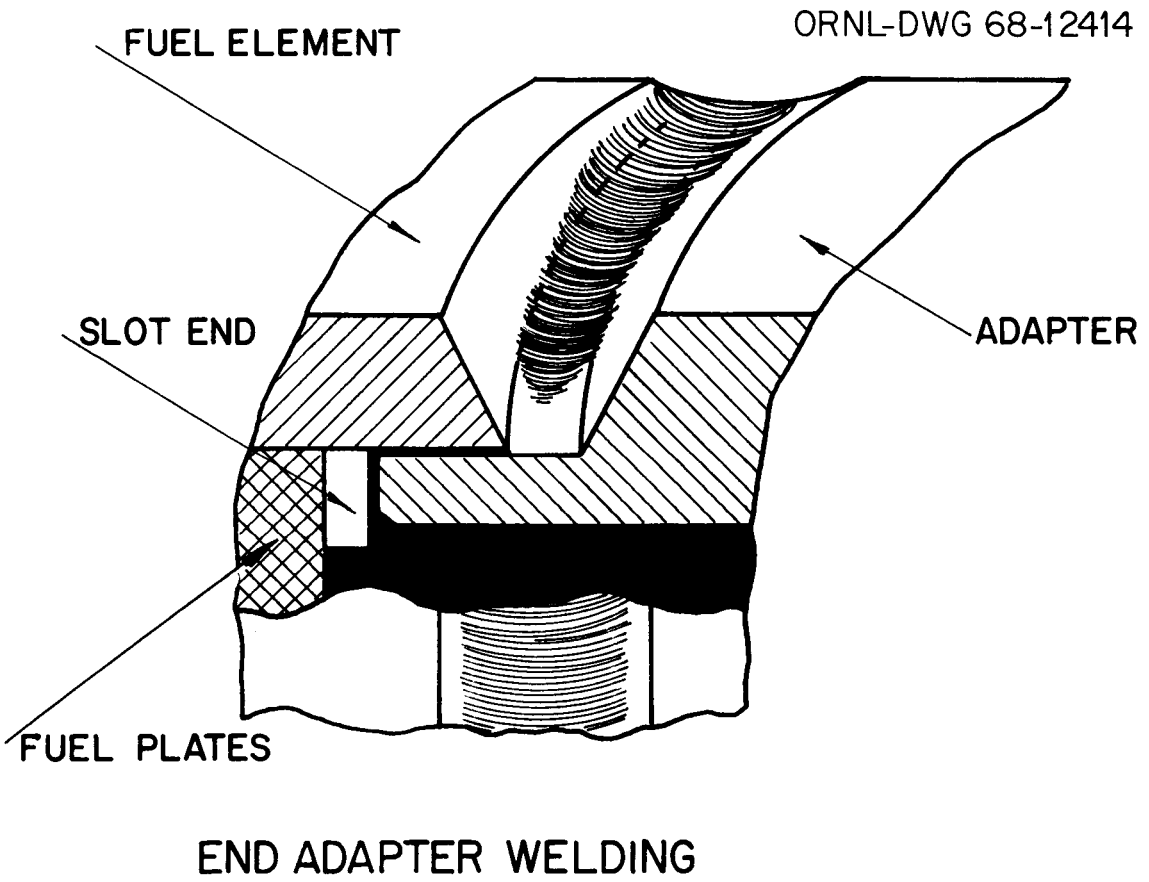

Fig. 39. Joint Used for Attaching End Adapters.

element side plate beveled at 30° and a matching angle on the end adapter 0.575 in. from its end. The end adapter slipped on the side plate end and bottomed on the side plate slot ends, providing a fixed root gap of 0.125 in. A butt-type weld attached the end of the side plate to the end adapter.

The fuel element was first installed on a lathe in a special alignment and centering fixture. The ends were then machined for the necessary weld preparation, as discussed later in the machining section. All side plate ends except the bottom ends of side plates 2 and 3 were beveled. Actual diameters were measured for the surfaces that would mate with the end fittings. Each end adapter was then machined for an interference fit with the measured side plate. The adapters were positioned by expanding (heating) or shrinking (cooling) and pushing them into place. The trunion rings, used previously for fuel plate welding, were installed and adjusted as previously described. The assembly was then installed on the welding table and preheated to approximately 60°C. After preheat, the fitup between the adapters and the fuel element ends was inspected. After any needed adjustments, the type B welds (adapter welds) were made with the same equipment as used for the corresponding plate attachment welds. The welding parameters were essentially the same as those used for making the type A welds except the travel speed was 12 in./min for side plates 1 and 3 and 9 in./min for side plate 2. An as-welded fuel element is shown in Fig. 40.

MACHINING

As with most other requirements, the machining required in the fabrication of HFIR elements was difficult and to very close tolerances. The machining problems may be separated into two groups: The preparation of the components (primarily side plates) and the final machining of the welded elements. This section of the report is therefore broken into these two parts.

Fig. 40. Outer Fuel Element after Welding of End Adapters.

Machining and Inspection of Components

Side Plates

If the channel spacing, proper weld tie-in, and overall dimensional tolerances are to be achieved, the side plates must be machined to the specified tolerances. The spacing and parallelism of the slots help to establish channel spacing. The concentricity of the cylindrical surfaces and their relationship to plate slot and weld groove depths are major contributors to achieving the specified penetration of the fuel plates

into the weld grooves. Variations in side plate dimensions are cumulative in their effects on plate protrusion.

The side plate tubes for the first HFIR fuel element were manufactured in the ORNL machine shops. Special arrangements were made with the machine shops so that the same craftsmen would be used for this job as had been used during the development program. The greatest single concern at this time was the possibility of human error affecting the product. The manufacturing process was well in hand, but the tolerances specified required a great deal of dexterity and awareness on the part of the machinist to ensure an acceptable final product. Drawings describing these side plates are in Appendix A.

The side plates were made of type 6061 aluminum in the T6 condition. Side plate 1 stock was 5.562 in. OD × 0.500 in. wall × 28 in. long, conforming to ASTM-B-210-61 drawn tubing. Stock for side plates 2, 3, and 4 was 28 in. long and 11.250 in. OD × 0.938 in. wall, 12,250 in. OD × 0.875 in. wall, and 19.000 in. OD × 2 in. wall, respectively, conforming to ASTM B-221-63 extruded tubing. In addition, side plate 4 material required a 1.5 to 3% stretch after extrusion, conforming to designation[18] T6511. The stretching operation was added to decrease the out-of-roundness of the side plate in the unrestrained condition. Side plate 1 was a standard manufacturer's size. Side plates 2, 3, and 4 were nonstandard sizes but fitted existing extrusion dies owned by the manufacturer.

Side plates 1 and 3 have external fuel plate slots and are machined similarly. Except where noted, the following explanation will apply to both tubes. The tube was first checked to determine whether sufficient machining stock was available to obtain a finished side plate. Some of the extruded tubing was so out of round that it could not be used. The acceptable tubing was then chucked in the lathe with a four-jaw chuck and adjusted for minimum runout. The opposite end was faced and the outside surface was rough machined for half its length. The inside surface was then rough machined for approximately the same length.

---

[18] Alcoa Aluminum Handbook, Aluminum Company of America, Pittsburgh, Pa., 1962.

To make sure sufficient stock remained for further machining, the machined portion was checked for ovality. A steady rest was then set on the lathe and locked onto the rough-finished outside surface, and 15 weld grooves were finish machined to 5.244 in. in diameter for side plate 1 and 11.546 in. in diameter for side plate 3 (Fig. 41). Weld groove spacing was 1.011 in. for both side plates. The inspection grooves in the center and in one end were cut to 5.095 and 11.278 in. in diameter, respectively for the two side plates. The weld grooves and inspection grooves were machined with a special form cutter.

All finished weld grooves and inspection grooves were inspected by the Inspection Engineering Department before the machining continued. This inspection actually was done twice, once with the steady rest in place and once with the steady rest removed to check out-of-roundness.

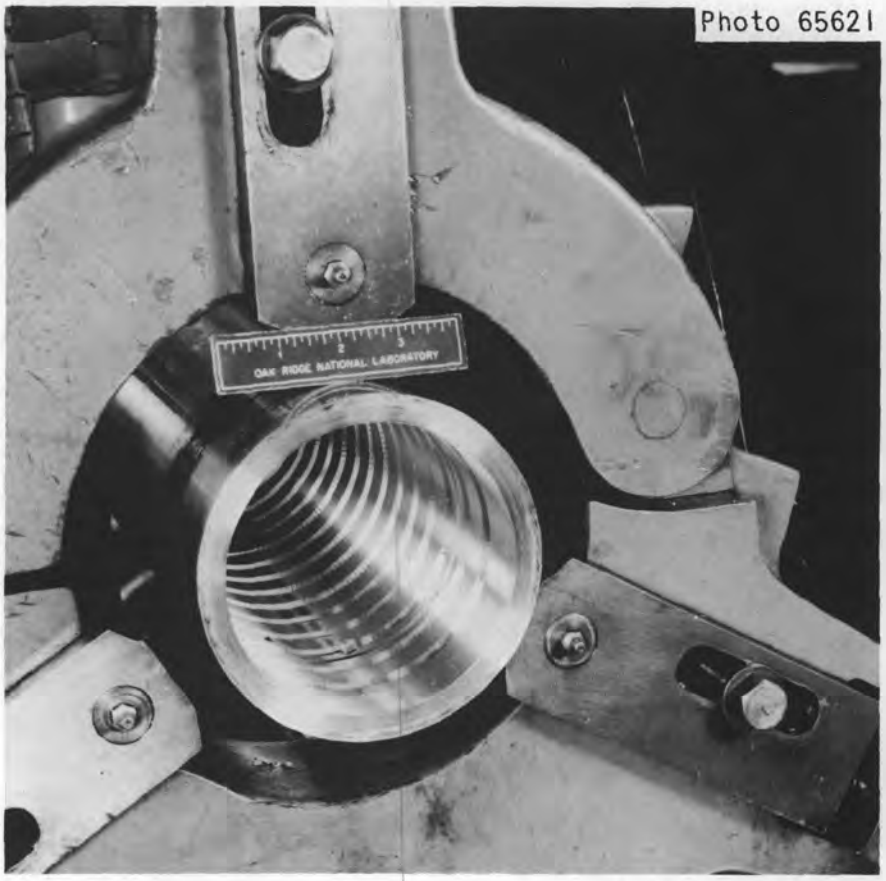

Fig. 41. Side Plate 1 Mounted in Steady Rest for Machining of First 15 Weld Grooves.

The inside surfaces were then machined for half the tube length to finished diameters of 4.800 and 11.050 in. This was done with several light cuts with out-of-roundness checked after each cut. When the final diameter was reached, the weld grooves, inspection grooves, and inside diameter were all reinspected to recheck final size and out-of-roundness. At this point, the half-finished side plate was removed from the lathe, and a Plexiglas or Lucite plug with a steel core was inserted into the finished end as a centering plug for future operations and to hold the tube round while the opposite end was being machined. This plug was stepped and sufficiently long that 4 in. extended into the tube and 2 in. remained beyond the end.

Each tube was then put back in the lathe and chucked by the 2-in. plug extension. It was aligned for minimum runout on the machined surface and the uncut portion of the outside surface was rough machined. The inside surface was rough machined for half its length, and the tube was again checked for ovality to make sure sufficient stock was available for final machining. The steady rest was put back on the lathe and locked on the outside surface of the tube, which was finished to a 26 1/4-in. length. The weld groove cutter was set up with weld groove 15 as a reference, and the remaining nine weld grooves and the last inspection groove were machined. The weld grooves and inspection grooves were reinspected at this point to assure that sufficient stock remained to finish the side plate. The final half of the inside surface was finish machined. Inspection Engineering made the final inspection on all inside dimensions as well as finish and ovality.

The steady rest was removed and a center plug was placed in the exposed end of the tube, the lathe tailstock center was inserted into the centering plug, and the tube was aligned for minimum runout. The outside surface was then finish machined and final inspected by Inspection Engineering. The tube was removed from the lathe and the centers were cleaned.

The tube with center in place, was then mounted in a No. 2 Cincinnati milling machine for slotting. The milling machine bed was equipped with a dividing head and tailstock. The tube was mounted between

centers, dogged to the dividing head, and adjusted for minimum runout. The cutter was mounted on the mill with an arbor support and centered over the tube. The mill bed was then moved to position the cutter in its proper x and y coordinates (as located from the engineering drawing in Appendix A) with the use of gage blocks. After the cutter was set up, its position was checked optically by Inspection Engineering. At this time the first cut was taken and inspected for parallelism, slot width, and x and y coordinates. After this final check, the tube was slotted (171 slots for side plate 1 and 369 slots for side plate 3) with the help of special indexing plates (Fig. 42). When slotting was completed but before the tube was removed from the milling machine, the tube was cleared of all chips and coolant to allow Inspection Engineering to 100% inspect the slots for width, parallelism, web thickness, and x and y coordinates. The tube was then removed from the mill and the plugs were removed. All final dimensions as inspected were recorded and were included

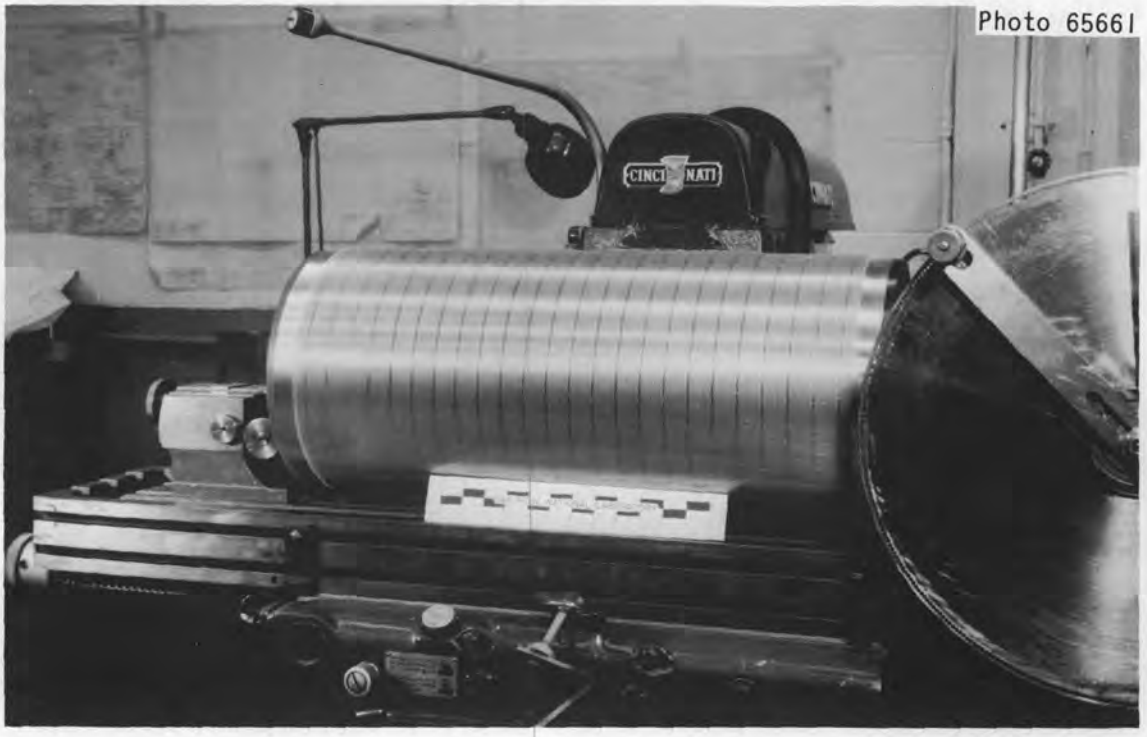

Fig. 42. Side Plate 3 Being Slotted. The large wheel on the right is the indexing plate used to align the cutter.

in an inspection report that was supplied with the finished tube. Appendix B contains a sample inspection report.

All machining operations were done with the use of Trim Mist coolant concentrate.[19] Boring and turning operations on the lathe were done at 117 rpm with an 0.007-in. feed for side plate 1 and 79 rpm with an 0.007-in. feed for side plate 3. All weld grooves were cut at 12 rpm with hand feed. To prevent dimensional instability caused by thermal expansion, the lathe was always run for 1 hr before any machining was started. The slotting was done with a 5-in.-diam cutter containing 36 tungsten carbide insert teeth; the cutter was 0.053 in. thick and was operated at 1500 rpm. The milling machine was warmed up for 8 hr before slotting was started. All slots were climb milled at a feed rate of 30 in./min, and the cutter was allowed to return to its starting position through each freshly cut slot. A 0.0001-in. dial indicator was attached to the arbor support and indicated any variability between the arbor support and the mill table. The optical inspection setup was maintained during the slotting operation to periodically verify that the x and y coordinates had not shifted.

The x and y coordinates, web width, and land width were inspected with a microalignment telescope. A dial indicator accurate to 0.0001 in. was used to inspect the sides and bottoms of slots for parallelism to the center line, all total indicator reading measurements, and weld groove spacing. Micrometers were used to inspect wall thickness between reference end surface and inside surface, weld-groove diameter, inspection groove diameters, and all inside- and outside-diameter dimensions. A scale was used to inspect the distance of the first weld groove from the end of the side plate and the spacing between the 1st and 24th weld grooves.

Side plate 2 differed from those previously discussed in that it had internal slots. It was rough machined initially in a manner similar to that used for side plates 1 and 3. After the outside surface had been

---

[19]Trim is a trademark of Master Chemical Corporation, P. O. Box 857, 13 N. Huron Street, Toledo, Ohio.

rough machined and the inside finish machined, the tube was mounted on plugs, with one plug in a four-jaw chuck and the other plug in the tailstock center. The tube was aligned for minimum runout and the outside surface was rough machined to a diameter of 10.870 in. At that time, the 24 weld grooves and 3 wall-assurance grooves were machined into the outside surface, as shown in Fig. 43.

The outside surface was then machined to size, and the weld grooves, wall-assurance grooves, and outside diameter were final inspected by Inspection Engineering. The tube was removed from the lathe and the end plugs were removed. Two Lucite or Plexiglas spacers were attached to the outside surface and the composite was inserted into a cast steel slotting fixture. The spacers were attached to the tube with set screws and to the slotting fixture with adjusting screws. The unit was then placed on a special cradle mounted on a Giddings Lewis horizontal boring

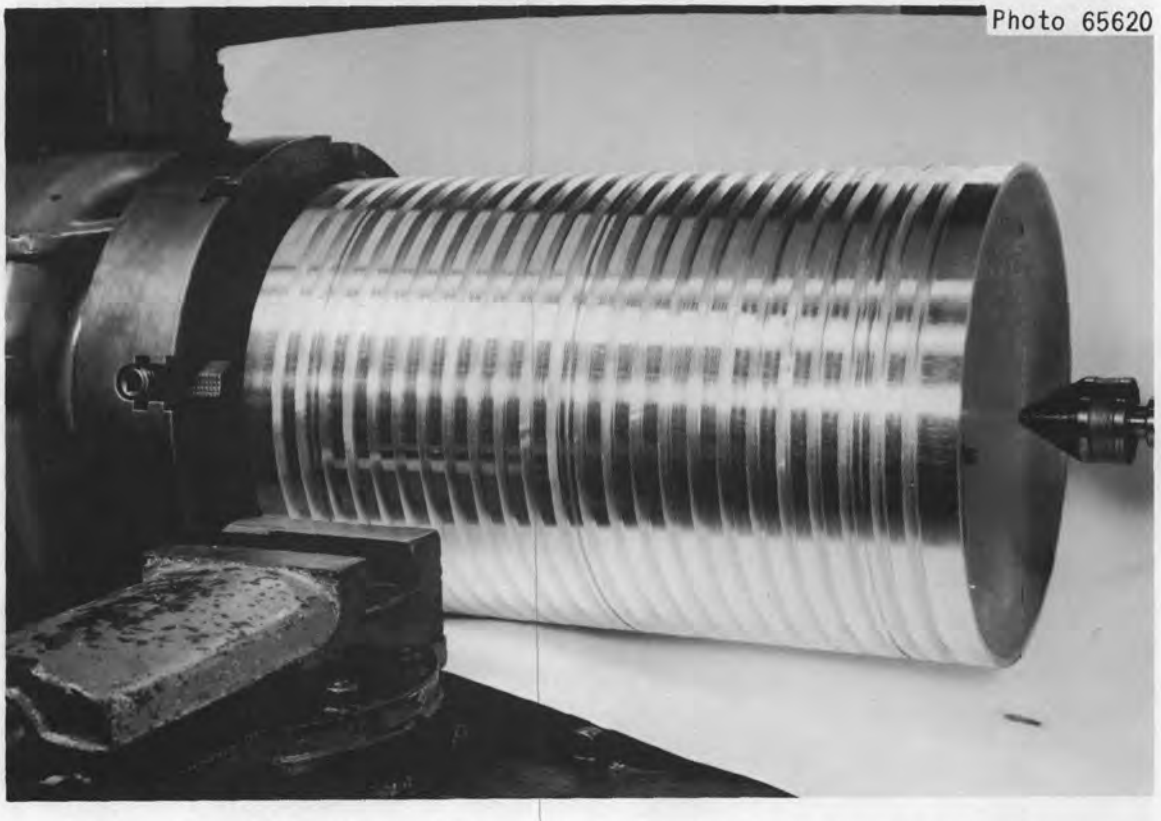

Fig. 43. Side Plate 2 Mounted for Machining of Weld and Wall-Assurance Grooves.

mill, as shown in Fig. 44 for the similar but larger side plate 4. The cradle and fixture were aligned for minimum runout, and then the inserted tube was aligned for minimum runout, which was not to exceed 0.002 in. TIR. A special cutter bar was now mounted inside the tube using the mill head as a center and the back support as a holding fixture. The drive-head of a Bridgeport milling machine was then coupled with the special cutter bar to drive the slotting saw. The bed of the mill was adjusted perpendicular to the tube center line for the x slotting coordinate. The mill head and back support were adjusted vertically for the y slotting coordinate. After the cutter was aligned mechanically and checked optically, the first slot was cut. It was inspected to make sure all adjustments were correct, and then the remainder of the 171 slots were machined. The indexing device used was similar to the larger one in Fig. 44. We bored 57 equally spaced holes in the end of the holding

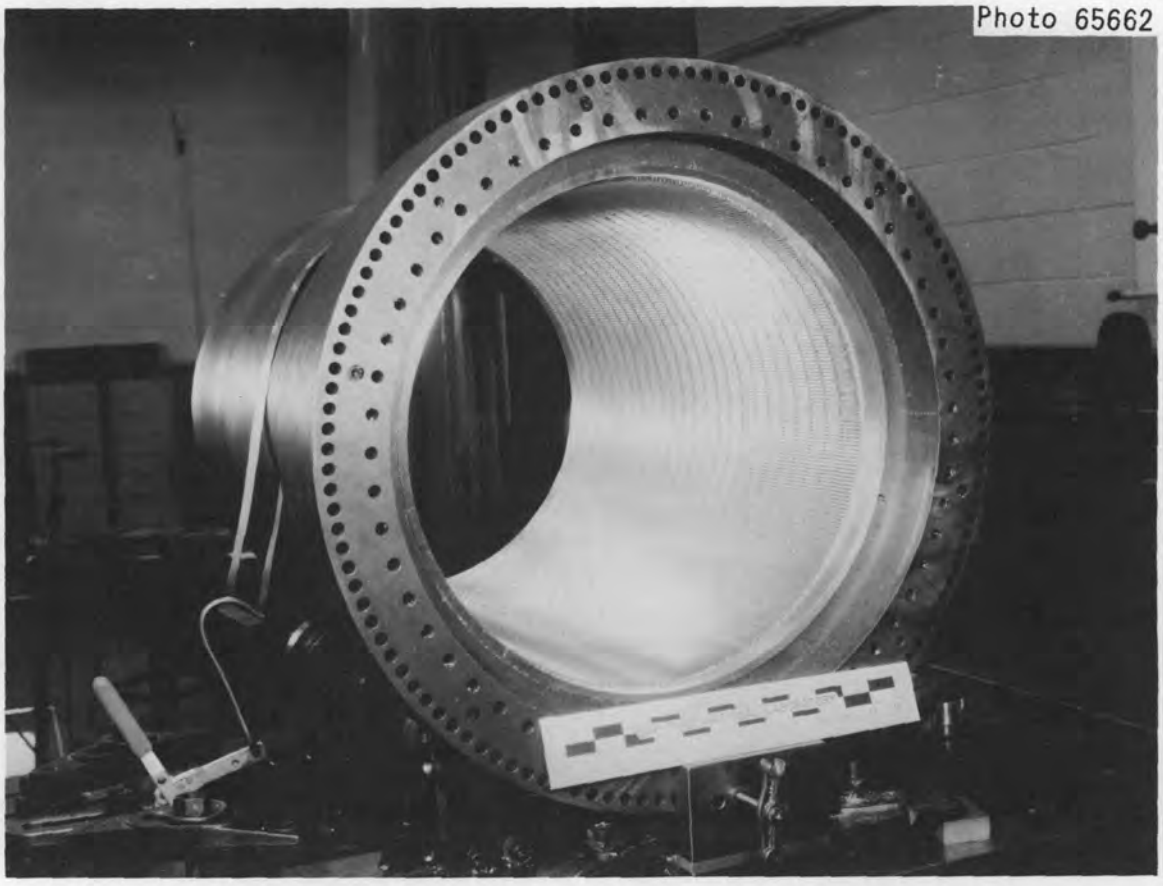

Fig. 44. Side Plate 4 Mounted on a Boring Mill for Slotting.

fixture and attached a three-hole lock plate to the cradle. Using the three holes consecutively and the 57 holes in the holding fixture consecutively, we cut 171 slots. The finished tube was then cleaned of cutting fluid and chips, and the slots were inspected 100% for spacing, width, parallelism, thickness of web, and x and y coordinates. The tube was then removed from the special fixture and was ready for deburring.

The slotting saw and its speed and feed were the same as for side plates 1 and 3. The weld grooves were cut at 28 rpm with hand feed. The tube was bored and turned at 41 rpm and 0.007 in. feed for roughing and 28 rpm and 0.003 in. for finish cuts. The Giddings Lewis horizontal mill was allowed to warm up for 1 hr before machining started.

The side plate 4 tube, which was the same as side plate 2 except for being larger, was rough machined on a vertical boring mill. This was necessary because of the weight and size of the raw stock. The tube was rough machined inside and outside for half its length, reversed, and machined over the other half to the same diameters. It was then removed from the boring mill and checked for sufficient stock for the remaining operations.

The tube was set up in a lathe on an adjustable spider and adjusted for minimum runout; then 24 weld grooves and 3 wall-inspection grooves were machined to size. The tube was again checked for ovality, and the outside surface was finished to final diameter. The weld grooves and outside diameter were final inspected by Inspection Engineering and the dimensions were recorded. The reference end surfaces of the inside were machined and inspected and the outside diameter reinspected. The tube was then removed from the lathe and the spider was removed.

At this time the outside diameter was 0.001 to 0.002 in. larger than the inside diameter of the special indexing fixture. The tube was packed in dry ice until it was approximately 0.015 in. less in diameter than the special fixture, and the two pieces were put together. The composite was now chucked in the lathe on one end and mounted on a steady rest at the opposite end. The composite was then adjusted for minimum runout by use of the reference end surfaces, and the inside was machined to finished diameter. The inside diameter was then final inspected by Inspection Engineering and the tube was ready for slotting.

For the slotting operation, the composite was set up on the Giddings Lewis horizontal mill (Fig. 44) similarly to side plate 2. The back plate was set up to align with the 123 holes bored in the indexing head of the restraining tube. The tube was then slotted similarly to side plate 2 except that 369 slots were cut. The finished tube was now cleaned of cutting fluid and chips, and the slots were inspected 100% for spacing, width, parallelism, thickness of web, and x and y coordinates. The composite was now removed from the boring mill and set up on a special separating fixture. This fixture contacted the lower lip of the side plate tube, forming a container, which was then filled with dry ice. The composite was now raised off the floor about 3 in. by a crane attached to the separating fixture. When the contraction of the side plate tube released the special indexing fixture, the fixture dropped to the floor and the crane was used to lift the tube the rest of the way out. The tube was now ready for deburring. Machining speeds and feeds, special cutters, and coolant were the same as those used for side plate 2.

During the machining of these tubes, one side plate 2 tube was lost due to human error. The machinist's foot slipped, cutting off the switch to the Bridgeport head, breaking the cutter and causing deep gouges in the side plate. Machining times for the side plates were as follows: side plate 1, 88 man-hours; side plate 2, 88 man-hours; side plate 3, 80 man-hours; and side plate 4, 140 man-hours.

Combs

Each HFIR fuel element has five combs, three on the outlet end and two on the inlet end. A typical comb design is shown in Fig. 45. These combs are shown as continuous circles; however, for manufacture and assembly it was desirable to make them as flat segments.

The comb segments were cut on a No. 2 Cincinnati milling machine with an arbor support. A mill vise with a rotary base was clamped to the mill bed. Two pieces of aluminum 1 3/4 × 2 × 15 in. were clamped in the vise, and the top surfaces were faced off. The faced surfaces were then set together, the pieces were again clamped in the vise, and

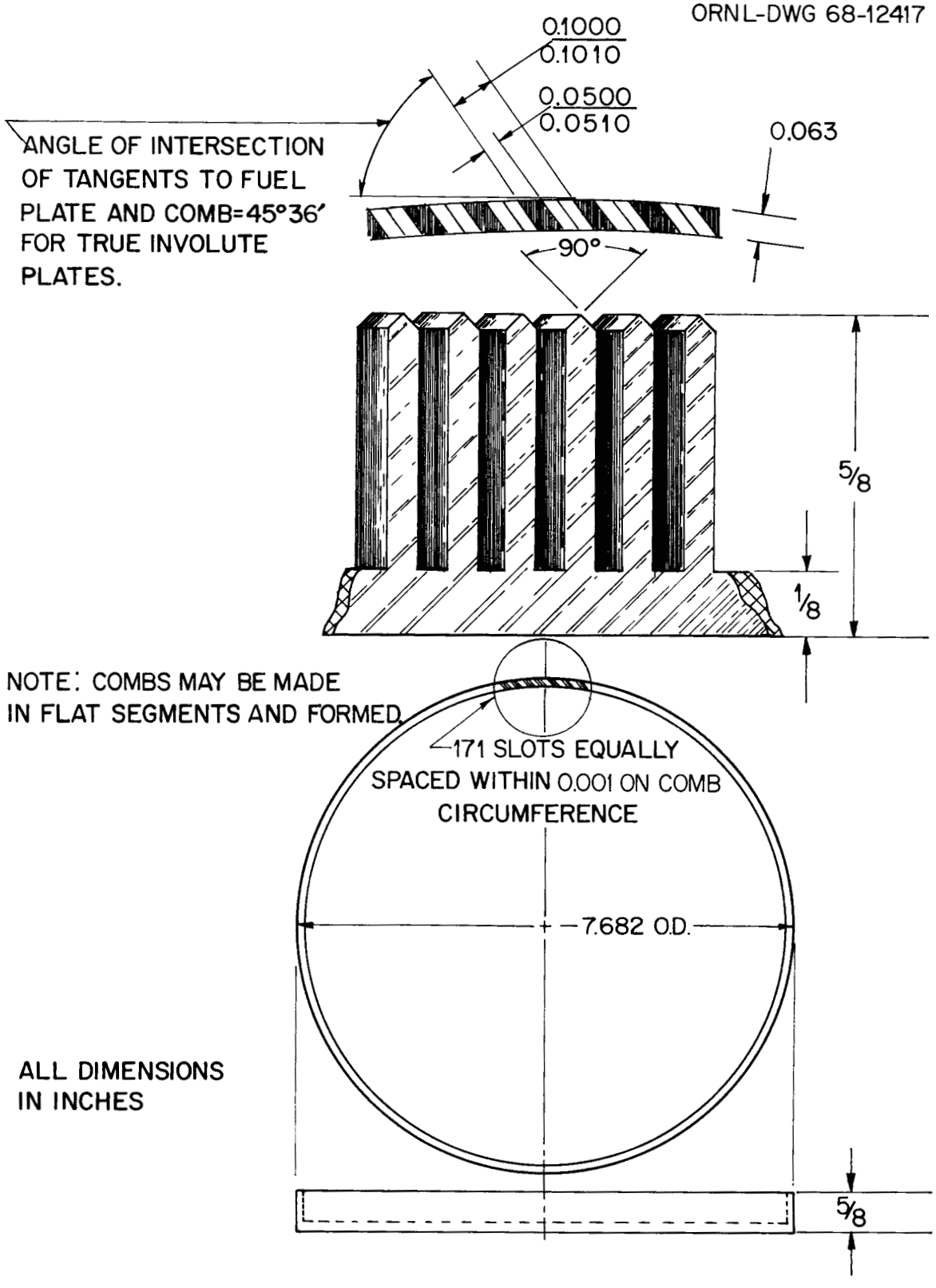

Fig. 45. Inner Fuel Element Bottom Middle Comb.

the new top surfaces were faced off. A recess 0.250 in. deep by approximately 1 1/2 in. wide by full length was cut into the pieces. The recess was cut so that approximately one-half of the total recess width was in each piece of aluminum. Then 30 type 6061-T6 aluminum strips were sheared to 17 × 3/8 × 0.063 in., stacked together, and clamped in the recess between the two machined aluminum pieces. The number of aluminum strips in the final stack was enough to fill the recess plus one to give a locking fit. This made it possible to clamp them firmly in the aluminum pieces and provided a bottom bearing surface for each aluminum strip. The vise was aligned so that the two aluminum clamp-piece tops were parallel to the mill bed and in the same plane. The aluminum strips were then faced off with a slab milling cutter until all of the surfaces exposed to the cutter were smooth and square. The ends of the stack of strips were next clamped together with a C clamp, and the stack was turned upside down but not end for end. Special care was taken to make sure that the machined surfaces of the stack were firmly supported by the recess in the aluminum clamp pieces. The surface exposed to the slab milling cutter was now machined until the stack was 0.250 in. thick. At this point, the slab milling cutter was removed and replaced with a 0.048-in.-thick slotting cutter mounted on an arbor with an arbor support. Once the cutter was set up, the vise was turned on its base until the comb blanks were at the proper angle for cutting, as determined with a sine bar. The bed of the mill was then adjusted to give the right depth of cut and the slotting was started. It should be noted that the cutter width was less than the final slot width; the sideways motion or whip of the cutter made up the 0.002 to 0.003-in. difference. All slots were climb milled, and the cutter was run back through the slot that it had cut. The number of teeth in the comb segments differed for each type of comb and was dependent upon the angle of the tooth.

Fuel Element Machining and Inspection

Weld Preparation

During welding, the HFIR fuel element side plates have a 1 in. extension beyond the fuel plate slots on each end. This extension was

helpful during assembly and welding, but three of them on each annulus have to be modified for the attachment of the end adapters. The top inner and outer extensions on both elements, the bottom outer extension on the outer annulus, and the bottom inner extension on the inner annulus, must be prepared. The configuration of these joints was shown in Fig. 39, page 75.

Both fuel elements were prepared for welding in the same manner. The fuel element was set on a mandrel in the lathe with one end of the mandrel held by a live tailstock center and the other end by a center at the lathe drive end. The mandrel was rotated with a dog. The fuel element was adjusted for minimum runout by adjusting feet attached to the mandrel and used to support the annulus. The three side plate extensions were now machined to a length of 0.450 in. from the side plate slots with a 30° bevel outward on the outer side plate and inward on the inner side plate to prepare for welding.

Final Machining and Dimensional Inspection

The HFIR fuel element as received for final machining was complete. All surfaces except the fuel plate ends and fuel plate slot ends were in a rough machined condition and required final machining. The fuel elements were machined according to the fuel element drawings in Appendix A. Final machining was a more arduous task than the side plate machining because less prior experience had been gained, the tolerances were tighter, and the machinists were subjected to considerably more pressure because of the financial investment involved. The procedures used for this final machining are shown on the flowsheet in Fig. 46.

The only preparation for machining was to mask the fuel plate ends. Doughnut-shaped pieces of plastic were cut to fit over the fuel plates and attached with masking tape. Care had to be taken to make sure the masking tape did not overlap areas to be machined. This masking was done to minimize entry of machining chips into the channels.

After masking, the fuel element was set up on the same mandrel used during weld preparation machining. The fuel element was set up for minimum runout on the top and bottom inner wall assurance grooves. The

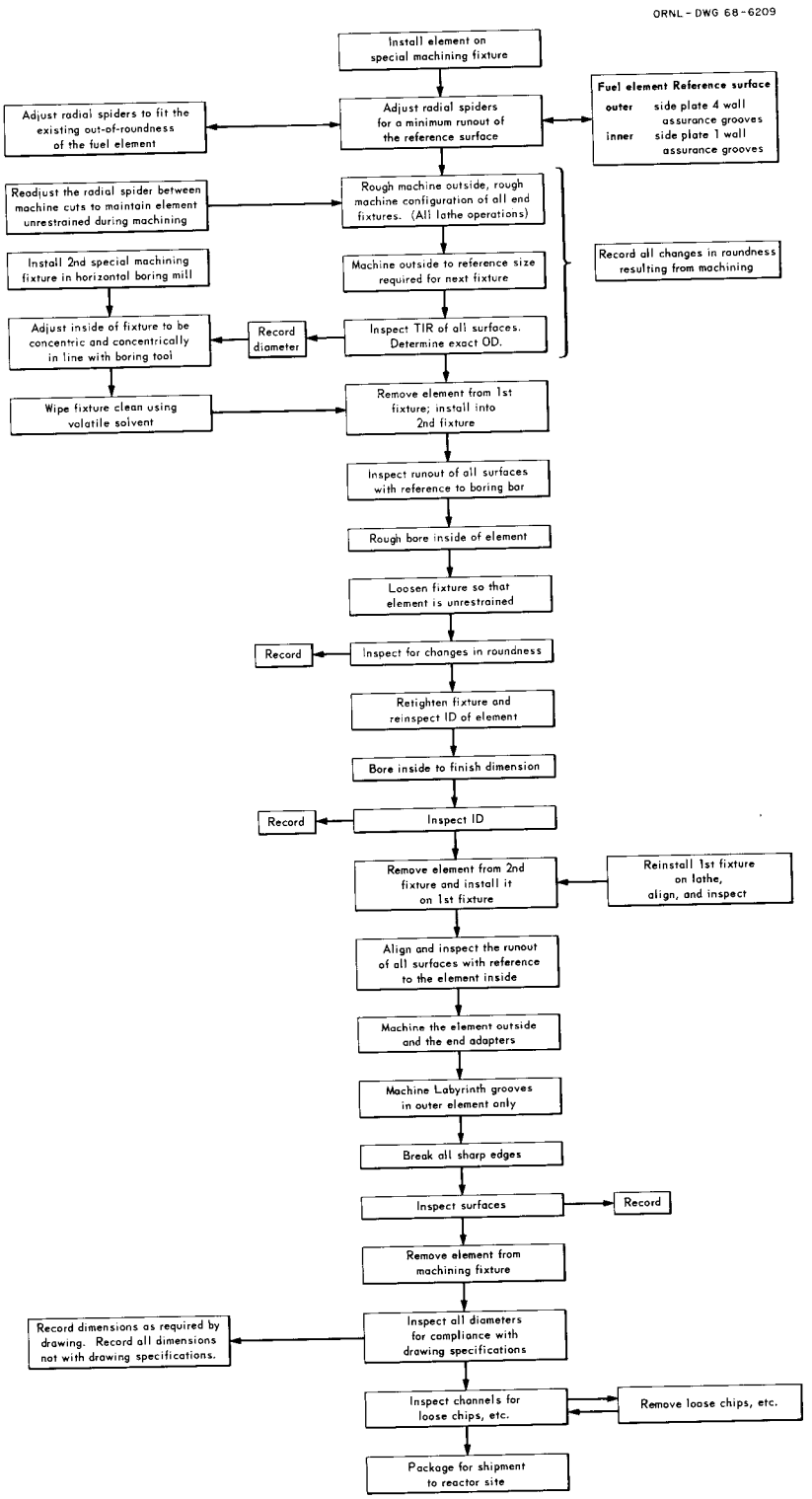

Fig. 46. Final Machining and Inspection of HFIR Elements.

top and bottom outer wall assurance grooves were then checked and the fuel element was readjusted to the best average center line. The outer annulus was turned to between 17.197 and 17.200 in. OD at a 130-rpm speed and a 0.006-in. feed. The inner annulus was similarly turned to 10.698 to 10.702 in. at 150 rpm. All machining was done dry or lubricated with alcohol. This was necessary since the finished fuel element could be cleaned with only alcohol or water and these liquids would not remove cutting fluids well enough to meet the rigid cleanliness requirements of the reactor.

At this stage, the fuel element was removed from the lathe and mounted on special cradles in a Giddings Lewis boring mill. The element was aligned by use of the top and bottom wall-assurance grooves to establish the best center line with the cutter bar. The inside was machined to between 11.240 and 11.250 in. in diameter for the outer annulus and 5.067 and 5.077 in. for the inner annulus; we used 97 rpm and 0.005-in. feed for the outer annulus and 110 rpm and 0.005-in. feed for the inner annulus. A maximum of 0.015 in. on a side was taken during the initial cuts, but after the wall became thin, it was necessary to reduce the cut to 0.005 in. to prevent taper and bell mouthing. The final cut was 0.0025 in. on a side and lubricated with alcohol. To ensure proper wall thickness, it was necessary to machine both the inner and outer annuli to minimum inside diameters. This condition arose from the shrinkage of the inside surfaces during welding. After the machining was completed, the fuel element was removed from the boring mill and set on its end until the inside diameter had stabilized. At this time the wall was so thin that the diameter could not be measured with the element horizontal. After the inside diameter was inspected, the wall thickness was calculated from the wall-assurance-groove diameter and the inside diameter.

The fuel element was next placed on a special expandable mandrel, shown in Fig. 47, which had been designed to hold the inside surface of the element round while the machining was completed. The center support is tapered steel. The flexible outer shell is 6061-T6 aluminum, its inside surface is machined with a taper matching the steel mandrel, and

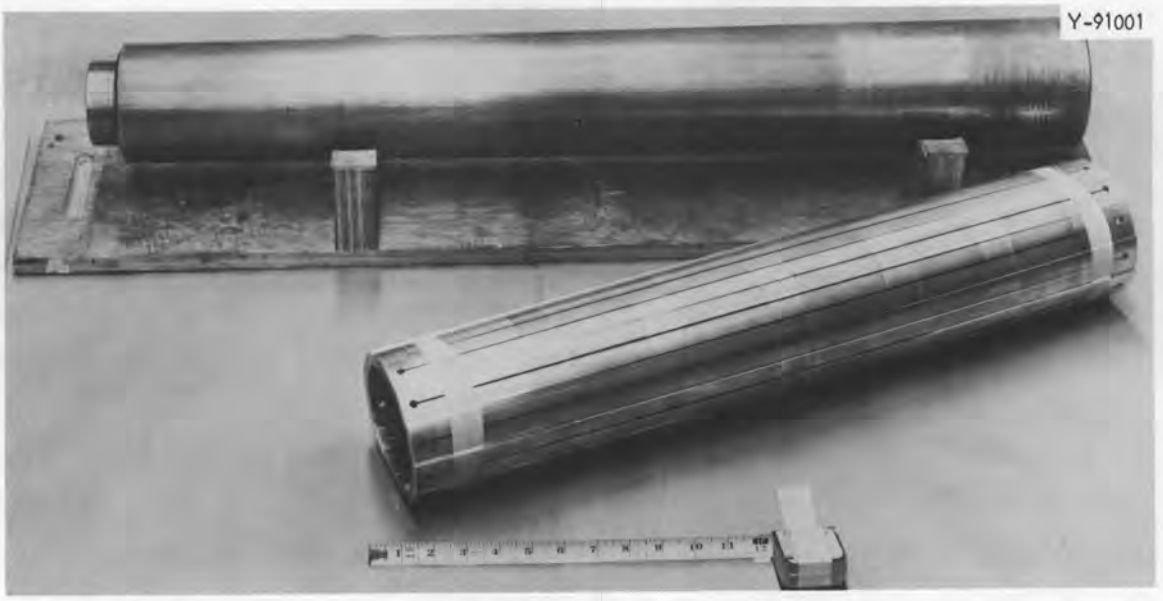

Fig. 47. Expandable Mandrel for Inner Annulus Machining.

its outside surface is machined to limit the amount of bearing support on the inside of the inner fuel element. The mandrel was mounted in a lathe with a four-jaw chuck at the drive end and a live center at the tailstock end. The mandrel was aligned so that the fuel element was centered on the bored inside surface. The finish machining was started on the tailstock end, finishing the noncritical dimensions first. All finish work was done at 110 rpm. If a surface could be machined so the lathe compound moved away from the work, 0.004-in. automatic feed was used; when the lathe compound moved toward the work, hand feed was used. After machining of the noncritical dimensions on the adapters was finished, a rough cut was taken on the outside surface; then the finish work was was done on the adapters on the tailstock end. The fuel element was then released from the lathe and, with the mandrel still in place, was rotated end for end, and the same procedure was followed on the opposite end adapters. The final operation was the finish cut on the outside surface. For all final cuts, alcohol was used as a lubricant. All cutting tools were tungsten carbide tipped. Several special cutters were used to get the reach required to complete the fuel plate sides of the adapters. On the inner annulus, a form cutter was used to make the end adapter radius on the top side of the outer side plate. This was done in two steps. The

cutter was first indexed in from the side until the face of the cutter was tangent with the outside surface of the adapter; then the cutter was indexed 90° and indexed into the end of the adapter until the face of the cutter was tangent with the previous cut. On the inner annulus, the final cut was taken on the 0.250-in. land on the outside surface; this land ensures fitup between inner and outer annuli.

On the outer annulus, the last cut was the mating surface to the inner-annulus final cut. This surface was machined after the outer annulus was removed from the lathe. A template was inserted over the inner adapter and locked in place. Grooves in the template matched a router support, which aligned a cutter in the router head and allowed the cutter to cut away only the required metal to finish to size, leaving the six lands untouched.

After final machining was completed, the two annuli were inspected 100% by the Inspection Engineering Department. All diametral dimensions were measured with the fuel element vertical.

ACCOMPLISHMENTS

The intent of this section is to present data showing what has been accomplished by the procedures outlined in this report. It is not intended as a complete presentation of the available data. When repetitive operations, more experience, and closer dimensioning of dies are used, as is the case in production, even better recoveries are expected. A sample inspection report on a completed fuel element is given in Appendix B.

Fuel Plate Recoveries

Table 9 lists data on flat fuel plates fabricated for the third critical experiment and for the first reactor core. With the exception of blistering, the rejection rates on fuel plates for the reactor element were significantly higher than for the critical test. As will be discussed, many of the values can be attributed to single occurrences and should not be indicative of a production operation.

Table 9. Summary of Fuel Plate Fabrication Data

	Inner Element		Outer Element	
	Critical	Reactor	Critical	Reactor
Number of plates required	187	171	385	369
Duplex powder metal compacts				
Number of compacts pressed	209	216	456	529
U_3O_8 in fuel region, wt %	30.16	30.16	41.44	41.44
B_4C in filler region, wt %	0.39	0.67	0	0
Dimensions of the fabricated plate, in.				
Width	3.562 ± 0.002	3.646 ± 0.002	3.235 ± 0.002	3.215 ± 0.002
Length	24.000 ± 0.010	24.000 ± 0.010	24.000 ± 0.010	24.000 ± 0.010
Thickness	0.050 ± 0.001	0.050 ± 0.0005	0.050 ± 0.001	0.050 ± 0.0005
Dimensions of the fuel region in the fabricated plate, in.				
Width	$3.054^{+0.023}_{-0.016}$	$3.060^{+0.014}_{-0.008}$	$2.773^{+0.013}_{-0.015}$	$2.753^{+0.010}_{-0.013}$
Length	$20.250^{+0.360}_{-0.281}$	$20.273^{+0.745}_{-0.352}$	$19.975^{+0.431}_{-0.412}$	$20.120^{+0.611}_{-0.245}$

Table 9. (Continued)

	Inner Element		Outer Element	
	Critical	Reactor	Critical	Reactor
Rejection percentage				
Duplex compacts				
Weight	0.5	1.4	0	0
Dimensions	0	0	0	0
Other	1.0	0	0	1.5
Fabricated plate				
Dimensions	0.5	12.7	0.4	8.4
Blisters	0	2.3	4.6	4.4
Nonbond	2.0	6.1	2.9	10.2
Fuel distribution	0	2.8	0	8.4
Surface	0	0.9	0.2	4.0

Dimensional rejects of inner plates resulted from trouble in early batches with excessive interference between fuel compacts and frames during billet assembly and inexperience during rolling with mill conditioning. These troubles were compounded by a decision to keep the core length on the high side of nominal. A single operator shearing error accounted for 80% of the outer plates rejected for dimensions. Airborne particles of iron oxide loosened from roof ventilators by a very heavy storm and picked up by plate surfaces during rolling produced the surface rejects. These inclusions did not become evident until the plates were etched before assembly.

During much of the period of fabrication of the outer-annulus reactor plates, difficulties were being encountered with the building ventilation system, resulting in very high humidities. On some days condensation occurred on the room walls. We believe that this excessive humidity was reflected in three areas: increased fuel inhomogeneity, spurious nonbonds, and an increase in blisters. The U_3O_8 and aluminum powders picked up moisture by both adsorption and condensation on the sides of the blending bottles. The damp powders clumped during blending and the clumps were not broken up during subsequent fabrication. The damp U_3O_8 also was more prone to stick to the sides of the pressing dies, resulting in increased concentrations at the edges of the compacts, which manifested themsleves as streaks of high U_3O_8 concentration at the plate ends.

While these concentration problems obviously caused high rejection rates for homogeneity, they also caused difficulty with the ultrasonic test for nonbond. With the recommended ultrasonic technique, a large clump of fuel that contains cracks or excessive porosity will cause a nonbond rejection signal. The nonbond indications occurred predominantly near the ends in areas shown by radiography to have high fuel concentrations. Several plates with these indications were destructively examined, and no true nonbond was found. A more elaborate ultrasonic technique, in which the amount of sound attenuation was measured, enabled us to recover some of the plates with these indications.

Data obtained on fuel plate curvature are presented in Tables 10 and 11. The standard deviations of 0.00252 and 0.00434 in. for the

Table 10. Forming Duplication of Fuel Plates

	Inner Annulus		Outer Annulus	
	Critical	Reactor	Critical	Reactor
Number of plates measured	186	171	393	369
Number of plates in statistical sample	20	171	50	369
Duplication of individual measuring points along the line,[a] in.				
Maximum range	0.006	0.009	0.024	0.017
Average standard deviation[b]	0.00282	0.00252	0.00728	0.00434
Range of all measurements,[a] in.	0.017	0.021	0.028	0.020
Standard deviation[b]	0.00764	0.01000	0.00924	0.00856
Curved width (chord), in.				
Top	3.308 ± 0.004	3.388 ± 0.006		3.122 ± 0.006
Center	3.314 ± 0.005	3.395 ± 0.007		3.128 ± 0.006
Bottom	3.307 ± 0.006	3.386 ± 0.009		3.121 ± 0.004

[a]Measurement down line taken at seven equidistant positions.

[b]95% confidence level.

reactor plates indicate that good forming reproducibility was obtained. The lower value for the inner plates is attributed to the larger amount of deformation required to produce the greater curvature. Differences between the standard deviations for the measuring points along a traverse and for those at a single point were caused by a saddle at the center of the plate. This saddle was also reflected in the greater chord width at the center position of the plates. These differences were caused by differences in springback between the fueled and unfueled areas of the

Table 11. Summary of Dimensional Measurements on Formed HFIR Fuel Plates

Element	Plate Type	Width Position[a]	Deviation of Average from Nominal[b] (in.)	Variance[c] (in.)	Total Range of Measurements[d] (in.)	Point Duplication[e] (in.)	Tangent-Chord Angles Base	Tangent-Chord Angles Tip
Flow test	Outer[f]	1	−0.001	0.0015	0.011	0.008	31° 26′ ±30′	19° 50′ ±15′
		2	−0.009	0.0024	0.013	0.001		
		3	−0.002	0.0016	0.012	0.010		
Third critical	Outer[g]	1	−0.0151	0.0019	0.010	0.007	31° 4′ ±35′	22° 58′ ±1° 0′
		2	−0.0166	0.0046	0.028	0.024		
		3	−0.0059	0.0073	0.016	0.016		
Reactor	Outer	1	−0.0066	0.0023	0.014	0.010	32° 13′ ±30′	18° 43′ ±20′
		2	−0.0066	0.0043	0.018	0.012		
		3	−0.0033	0.0027	0.014	0.012		
Flow test	Inner[h]	1	−0.001	0.0014	0.007	0.006	48° 24′ ±31′	29° 17′ ±23′
		2	−0.002	0.0031	0.014	0.011		
		3	−0.002	0.0016	0.006	0.006		
		4	+0.008	0.0025	0.012	0.01		
Third critical	Inner[i]	1	+0.0043	0.0019	0.008	0.005	49° 49′ ±45′	31° 4′ ±35′
		2	+0.0046	0.0038	0.017	0.007		
		3	+0.0015	0.0023	0.010	0.005		
		4	+0.0083	0.0028	0.011	0.005		
Reactor	Inner	1	+0.0019	0.0022	0.012	0.008	42° 00′ ±25′	28° 36′ ±18′
		2	−0.0000	0.0050	0.020	0.009		
		3	−0.0017	0.0027	0.014	0.007		
		4	+0.0115	0.0034	0.012	0.006		

[a]These are positions approximately equally spaced across the plate. For the outer annulus, positions 1, 2, and 3 correspond to points where the nominal radii of curvature are 2.460, 4.300, and 5.480 in., respectively. Similarly, at positions 1, 2, 3, and 4 across an inner-annulus plate, the nominal radii of curvature are 1.425, 2.731, 3.563, and 4.250 in., respectively.

[b]This is the deviation from the nominal section of the average measurement at all points at the same width coordinate on all plates of the sample.

[c]This is the quantity s given by $s^2 = [\Sigma x^2 - (\Sigma x)^2/N]/(N-1)$, where x represents each individually measured deviation and the sums are over all N measurements.

[d]This is the difference between the largest and the smallest values for all the measurements at the same width coordinate on all plates; it compares all values along a given scan.

[e]This is the greatest difference for the given width coordinate between the extreme values measured at corresponding points on all plates.

[f]This is a set of 354 plates made with depleted uranium to demonstrate an outer annulus fabricated by welding the fuel plates between concentric side plates.

[g]This is a group of 50 plates chosen by chance from a set of 421 made with enriched uranium for use in the outer annuli of the third HFIR critical experiment. This set varied more in shape than the usual plates, probably because of excessive handling between rolling and forming.

[h]Ten of the plates made with depleted uranium for the inner annulus of a demonstration element with plates welded between concentric side plates.

[i]This is a group of 20 plates chosen by chance from a set of 192 made with enriched uranium for use in the inner annulus of the third HFIR critical experiment.

plate and could have been eliminated by additional die modifications; however, since they did not interfere with assembly they were allowed to remain. On these tables the more significant columns are those presenting data on point duplication. If these differences are small as shown, good plate spacing in a completed element is much easier to achieve; however, considerable correction is provided with the present assembly technique.

The slightly larger differences in point duplication with the reactor outer element are thought to have been caused by variations in work hardening caused by fuel plate handling after the final anneal.

The data on the base and lip angles show how much the plates may deviate from ideal along the two edges. As explained previously, such deviations are not a problem as long as they are reproducible, since the side plates are grooved to fit.

Uranium Content and Distribution

As would be expected with a powder metallurgy product in which the fuel for each core is individually weighed, excellent control was maintained on total uranium content, as shown by data in Table 12 for plates for the third critical experiment. Obviously, no mechanisms are operating that lead to uranium losses.

Data on fuel plate losses from failure to comply with the distribution specifications are presented in Table 9, page 94, and were very low. This does not mean that all the accepted plates met the specifications as written. The homogeneity scanner rejected over 80% of the plates examined. The data from the plates were then examined by both a reactor designer and a materials man on the basis of the size and location of the defects and their relationship to surrounding areas. As a result of this more detailed examination, most plates were accepted for use. The homogeneity scanner worked very well and offers an excellent method for measuring fuel distribution. It has the capability of making as detailed an analysis of the data as is desired.

Table 12. Uranium and Boron Contents in Plates Made for Third Critical Experiment

Annulus	Constituent	Content, g	
		Specified	Found[a]
Inner	^{235}U	15.18 ± 0.15	15.27 ± 0.004
Outer	^{235}U	18.44 ± 0.18	$18.35\ ^{+0.07}_{-0.08}$
Inner	^{10}B	0.0124 ± 0.0012	$0.0123\ ^{+0.0008}_{-0.0010}$

[a]Values represent wet chemical data from ten dissolved fuel plates. Reported accuracy of uranium values 0.2% and boron 5% at 95% confidence level.

Boron Content and Distribution

The excellent control achieved over the total boron content in the inner fuel plates is shown by data in Table 12. The variations are well within the specifications.

Demonstrating that adequate boron distribution had been achieved was complicated by the very small quantities involved, especially in the thin area over the hump. It was necessary to modify and develop analytical techniques to obtain sufficient accuracy to show that the tolerances had been met.[20] The analytical accuracy was improved from over ±50% to ±6%.

[20]An unpublished ORNL procedure entitled "Determination of Boron in Punchings from HFIR Fuel Plates," dated December 11, 1963, by W. R. Laing and B. Philpot is used for the anlaysis. It is available from W. R. Laing, Analytical Chemistry Division, ORNL. Essentially, the punchings are dissolved in HNO_3-HCl solution, and the B_4C is separated by filtration and then solubilized by carbonate fusion. The boron is separated from interfering elements by ion exchange [F. M. Hill, "Ion Exchange Separation of Boron from Other Elements," Method No. 1 00701 (R. 5-16-63), ORNL Master Analytical Manual, TID-7015, Suppl. 7 (March 1965)] and determined by a potentiometric mannitol-sodium hydroxide titration [F. M. Hill, "Boron (Borate), Potentiometric Mannitol—Sodium Hydroxide Titration Method," Method Nos. 1 211220 and 9 00711220 (R. 5-15-63), ORNL Master Analytical Manual, TID-7015, Suppl. 7 (March 1965)].

To demonstrate that the specified boron distribution had been achieved five samples 1/2 in. in diameter were punched from each of three scans down the plate. During development, these were supplemented with additional random samples. Data obtained from inner fuel plates for the critical element are presented in Table 13. Even in Row 2, which is the thin portion over the hump, good control well within specifications was achieved.

These data were also fitted to a quadratic equation to permit extrapolation to other regions of the plate. From the data for the critical plates, the derived equation was:

$$Bc = 537.0 - 411.0W + 102.6W^2 + 0.17L^2, \qquad (1)$$

where Bc is the natural boron content of 0.5-in.-diam punchings in μg, W is the width coordinate ($0.60 \leq W \leq 2.85$ in.), and L is the length coordinate measured from the plate center ($-8.00 \leq L \leq +8.00$ in.). The 95% confidence interval for the predicted observation is ±23 μg for an individual value and ±4 μg for the average of six values.

Equation (1) shows that the length coordinate gives a small but significant contribution to the boron content of the punchings. It predicts a gradual increase in boron from the center to the ends of the central 16 in., reaching 9% at L = ±8 in.

The corresponding relationship derived for the inner plates of the first reactor core is

$$B = 1.724Bc, \qquad (2)$$

where B is the natural boron content in a 0.5-in.-diam punching and Bc is the similar content for the critical-experiment plate given by Eq. (1) for the corresponding location. The multiplier of Bc resulted from a 70.5% increase in boron content specified for these plates and reduction of the experimental error. Equation (2) predicted successfully the boron content in 20 punchings from one reactor plate. In the test, samples were taken randomly from within the coordinate limits $0.60 \leq W \leq 2.85$ in. and $L \leq 8.00$ in. and analyzed chemically for boron. The maximum differences between the analytical results and the predicted values were

Table 13. Statistical Analysis of Boron Distribution in Six Inner-Annulus Fuel Plates for Critical Element

Row No.	Coordinates of Punchings, Distance, in.		No. of Replicate Punchings	Boron Content[a] (μg)					Tolerance Limits[b] (%)
	From Reference Edge of Plate	From Center of Plate		Specified		Found			
				Min	Max	Min	Max	Av	
1	0.52	0, ±4	18	239	495	337	377	355	8
		±8	12	239	495	343	377	363	8
2	1.92	0, ±4	18	77	159	107	136	127	22
		±8	12	77	159	122	145	138	20
3	2.92	0, ±4	18	138	284	201	225	213	13
		±8	12	138	284	209	233	222	13

[a]Isotopic analysis of boron was 18.5 wt % ^{10}B.

[b]Tolerance limits calculated at the 95% confidence level to include at least 99% of the distribution for a sample of 76.

+5.4% and −4.3%; this excellent agreement attests to the validity of the derived equations. The distribution of boron in this plate appears to be fairly homogeneous within the coordinate limits that were examined. The largest deviations between the analytical results and the specified values were +11.1% and −4.8%.

We could not extend the usable limits of the boron equation to include values of L up to ±9 1/4 in. The boron contents of the 0.5-in.-diam punchings decreased significantly beyond L = ±8 in., while the equation predicts a slight increase. At L = ±9 1/4 in., the average boron content of the punchings was approximately 12% below the expected value. These samples, however, are well within the allowable boron variation of ±35%.

Water Channel Spacing

Maintaining the specified water channel spacing tolerances is one of the more critical specifications; however, it also was difficult to achieve during the development period. That the developed procedures have now accomplished this goal is illustrated by the data in Table 14. To demonstrate acceptability, 5,643 measurements were made on each inner and 12,117 from each outer element obtained from 3 radial and 11 axial positions in each channel. To present a broader picture data from the flow-test assembly are also included. Both annuli for this assembly were fabricated from fuel plates made with depleted uranium. Since the critical element contained loose plates, no channel spacing data were available from it. All four annuli are well within the required specification of ±0.010 in. for individual measurements and ±0.006 in. for the channel averages.

Weld Quality

The integrity of the welds joining the fuel plates to the side plates of the elements was demonstrated with quality control samples welded by procedures identical with those used in manufacturing the elements. Each quality control sample was then sectioned through the

Table 14. Summary of Plate Spacing on HFIR Fuel Assemblies

	Flow Assembly		First Reactor Fuel Assembly		Design Requirements
	Inner	Outer	Inner	Outer	
Number of measurements	5643	12,177	5643	12,177	
Number of channels measured	171	369	171	369	All
Maximum individual measurement, in.	0.057	0.055	0.056	0.052	0.060
Minimum individual measurement, in.	0.046	0.044	0.044	0.044	0.040
Average channel thickness, in.[a]	0.0510	0.0488	0.0499	0.0484	0.050
Maximum average channel cross section, in.	0.053	0.052	0.052	0.051	0.056
Minimum average channel cross section, in.	0.048	0.047	0.047	0.046	0.044

[a]The average thickness of the channels was calculated at each of the eleven axial measuring positions for every channel.

center line of the weld and prepared for metallographic examination. Typical sectioned samples are shown in Fig. 48 and illustrate the excellent attachment achieved. The sample noted as QC-1 was representative of side plates 1 and 3, QC-2 was representative of side plate 2, and QC-4 was representative of side plate 4. The 100-lb pullout strength required for the weld joints was demonstrated on mechanical property specimens obtained from a cylindrical side plate 1 sample with flat plates protruding radially from its outer surface. Pullout strengths in the 160- to 260-lb range were obtained.

Final Dimensions

The dimensional tolerances obtained in the final machining of the element were good but not as outstanding as the other accomplishments.

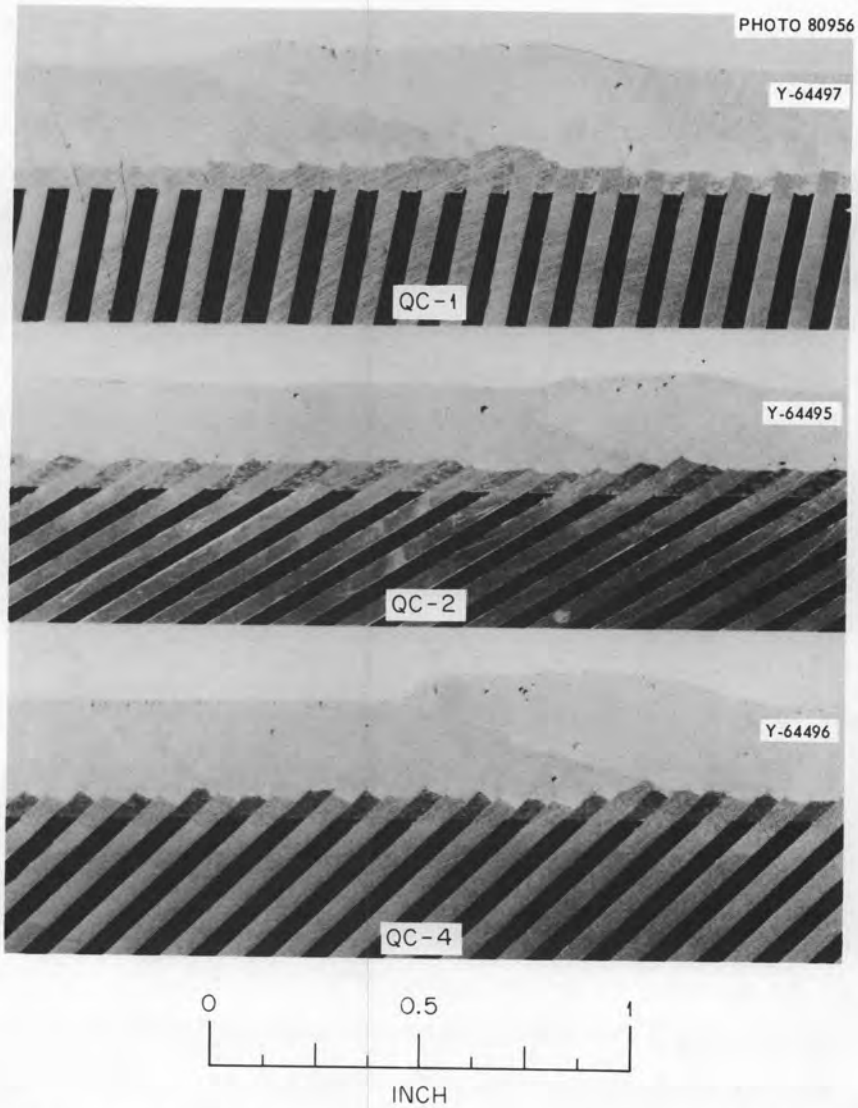

Fig. 48. Typical Quality Control Samples for Welds of Fuel Plates to the Support Tubes. See text for explanation of specimen numbers.

This was not surprising, since no elements had been available to develop the machining techniques. It was necessary to develop the procedures as these elements were machined. However, this limited development did demonstrate that, although the tolerances are very tight and the machining is difficult and requires constant attention, the tolerances can be met. While not all the values listed as tentative specifications were achieved, none appeared to be impossible. Until additional data on fuel element machining can be obtained, we decided to leave the specifications as written.

Data obtained on the final machined dimensions for the flow assembly and the reactor assembly are listed in Tables 15 and 16. Dimensions designated by Roman numerals affect the fit of the elements together and within the core. While many of these dimensions do not meet the tentative specifications, none are very far off. Most of the out-of-tolerance dimensions were found on the elements after removal from the machines. Removing the mandrels or backup sleeves had permitted them to deform. Changes in machining sequence and lighter cuts should minimize this problem. If not, a stress-relieving operation will be required; however, such a step will not be used unless necessary since it would greatly increase the possibility of the fuel plates warping.

Since these data were obtained, we have found that placing the element in a horizontal position on a surface plate during measurement will cause distortion. Therefore, the actual dimensions were probably closer than those reported here. The present technique requires all measuring with the element vertical.

CONCLUSIONS

A procedure has been presented and shown, on the basis of a single element, to be capable of producing a HFIR fuel assembly to the required and very tight specifications. While conventional equipment and operations are used, the operations must be more tightly controlled than is customary. Operators must be careful and continually alert to achieve acceptable recovery rates. On the basis of these results, fuel plate recovery rates of 90% appear to be possible. Sufficient data are not available to predict what recoveries of finished fuel assemblies will be likely.

ACKNOWLEDGMENT

The author would like to acknowledge the assistance of the following people and groups: the technicians who fabricated the elements making the process work and who offered many suggestions for improvements on the source of problems; the graphic arts and metallographic groups for

Table 15. Flow Test Assembly Dimensions

Dimensions[a]	Dimensions, in.			Concentricity, in.	
	Specified	On Machine	Unsupported	Specified	Measured
Outer element					
Overall dimensions					
Outer diameter: top	17.134 $^{+0.010}_{-0.000}$	17.136	17.142	0.0002	0.001
bottom		17.132	17.138	0.002	0.001
Inner diameter	11.250 ±0.010	11.243	11.246	0.005	0.007
Inner fit of bottom outer end fitting, VII	16.750 $^{+0.005}_{-0.000}$	16.750	16.762	0.002	0.001
Inner fit of top outer end fitting, VIII	16.471 $^{+0.005}_{-0.000}$	16.465	16.475	0.005	0.004
Top inner end fitting, inner diameter of pad, IX	10.922 ±0.001	10.925	10.930		
Inner diameter of top inner end fitting, X	10.962 ±0.005	10.960	10.971	0.005	0.001
Length between bearing surfaces, XI	29.625 ±0.005	29.627	29.629	0.002	0.002
Lower bearing surface to top of inner adapter, XII	28.750 ±0.005	28.759			
Inner element					
Overall dimensions					
Outer diameter: top	10.590 ±0.010	10.588	10.590	0.005	0.005
middle		10.589	10.590		
bottom		10.587	10.590	0.005	0.003
Inner diameter: top	5.067 $^{+0.010}_{-0.000}$	5.070	5.072		
middle		5.068	5.073		
bottom		5.068	5.071		
Inner diameter fit of lower inner end fitting, I	5.557 ±0.005	5.559	5.561	0.005	0.004
Outer diameter fit of top inner end fitting, II	5.312 ±0.005	5.313	5.314	0.005	0.004

Table 15. (Continued)

Dimensions[a]	Dimensions, in.			Concentricity, in.	
	Specified	On Machine	Unsupported	Specified	Measured
Inner diameter of top outer end fitting, III	10.872 ±0.005	10.873	10.874	0.005	0.004
Outer diameter of top outer end fitting, IV	10.915 ±0.001	10.916	10.917	0.002	0.0005
Length from lower bearing to top inner bearing, V	27.938 ±0.005	27.937			
Length from lower bearing to top outer support, VI	28.875 ±0.005	28.877			

[a]Roman numerals identify the dimension on the fuel element drawing in Appendix A.

Table 16. Reactor Assembly Dimensions

Dimensions[a]	Dimensions, in.				Concentricity, in.		
	Specified	On Machine	Measured Free		Specified	Measured Free	TIR[b] on Machine
Outer element							
Overall dimensions							
Outer diameter: top	17.134 ±0.010	17.142	17.143	17.146	0.002		0.0025
bottom		17.144	17.137	17.146			0.002
Inner diameter: top	11.250 ±0.010	11.248	11.245	11.256		0.006	
bottom		11.253	11.246	11.257	0.005		< 0.005
Inner fit of bottom outer end fitting, VII	16.750 +0.005 −0.000	16.752	16.741	16.754	0.002		0.0025
Inner fit of top outer end fitting, VIII	16.471 ±0.005	16.475	16.471	16.477	0.005	0.004	
Top inner end fitting, inner diameter of pad, IX	10.922 ±0.001	10.924	10.923	10.928			0.004
Inner diameter of top inner end fitting, X	10.962 ±0.005	10.959	10.955	10.960	0.005	0.003	< 0.005
	16.757 ±0.005	16.7575	16.750	16.757	0.005	0.005	< 0.005
Length between bearing surfaces, XI	29.625 ±0.005	29.622		29.623	Faces flat and parallel		< 0.002
Lower bearing surface to top of inner adapter, XII	28.750 ±0.005		28.748				
Inner element							
Overall dimensions							
Outer diameter: top	10.590 ±0.010	10.593	10.594	10.595	0.005		0.0025
middle		10.593					
bottom		10.593					
Inner diameter: top	5.067 +0.010 −0.000	5.071	5.067	5.071	0.005		0.0008
middle		5.071	5.067	5.072			
bottom		5.071	5.068	5.073			

Table 16. (Continued)

Dimensions[a]	Dimensions, in.			Concentricity, in.		
	Specified	On Machine	Measured Free	Specified	Measured Free	TIR[b] on Machine
Inner diameter fit of lower inner end fitting, I	5.5557 ±0.005	5.558		0.005		0.0017
Outer diameter fit of top inner end fitting, II	5.312 ±0.005	5.314		0.005		0.0015
Inner diameter of top outer end fitting, III	10.872 ±0.005	10.873	10.873 10.874	0.005		0.0025
Outer diameter fit of top outer end fitting, IV	10.915 ±0.001	10.9155	10.9155 10.9160	0.002		0.0002
Length from lower bearing to top inner bearing, V	27.938 ±0.005	27.934				
Length from lower bearing to top outer support, VI	28.874 ±0.005	28.872				

[a]Roman numerals identify the dimension on the fuel element drawings in Appendix A.

[b]Total indicated runout.

the many excellent illustrations; Sigfred Peterson and R. W. Knight for assistance in assembling and editing the report; R. D. Cheverton and J. R. McWherter for assistance in adapting the design to alleviate fabrication problems; A. L. Boch for overall project direction.

APPENDIX A

Engineering Drawings

ORNL-DWG 68-12426

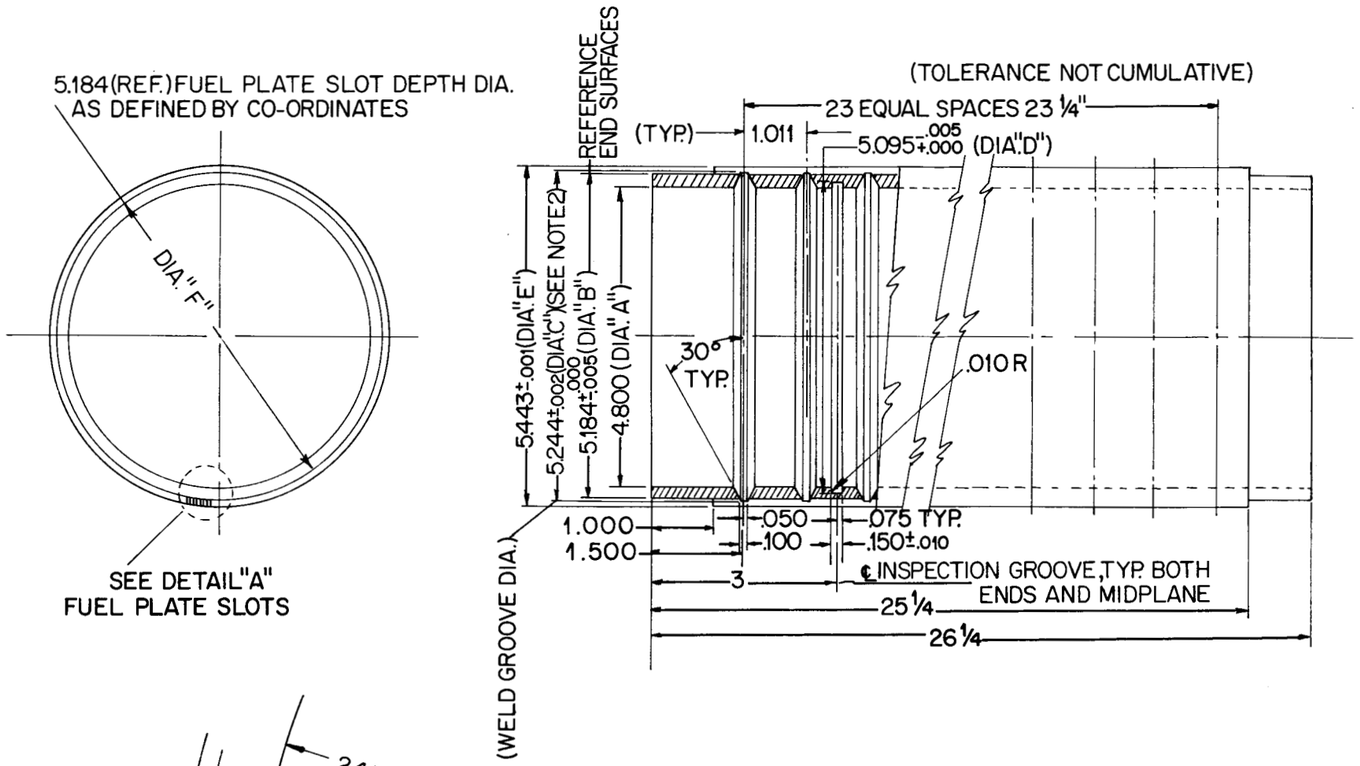

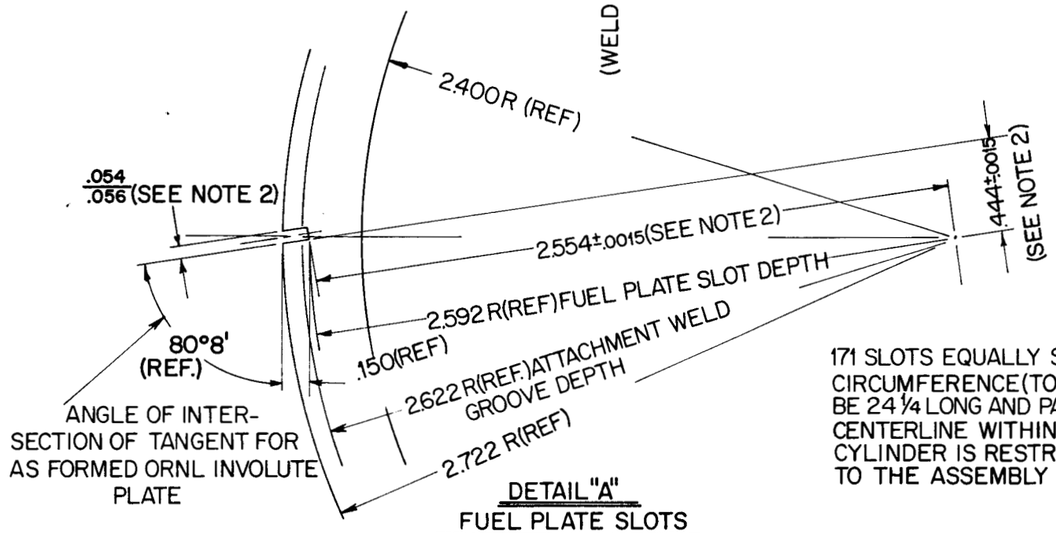

DETAIL "A"
FUEL PLATE SLOTS

171 SLOTS EQUALLY SPACED WITHIN .002 (SEE NOTE) CIRCUMFERENCE(TOLERANCE NOT CUMULATIVE) TO BE 24 1/4 LONG AND PARALLEL TO THE VERTICAL CENTERLINE WITHIN .002 (SEE NOTE 2) FIR WHILE CYLINDER IS RESTRAINED IN A FIXTURE COMPARABLE TO THE ASSEMBLY JIG.

NOTES

1. DIAMETERS "B", "C", "D", "E" & "F" SHALL BE CONCENTRIC TO DIA. "A" WITHIN .002 FIR.
2. TOLERANCES REFERING TO NOTE SHALL BE EVALUATED ON THE BASIS OF ORNL FABRICATION EXPERIENCE.
3. DETAILED PROCEDURES COVERING MACHINING & INSPECTION SHALL BE SUBMITTED ON COMPLETION OF FABRICATION.

HFIR FUEL ELEMENT
INNER ANNULUS, INNER SIDE PLATE 1

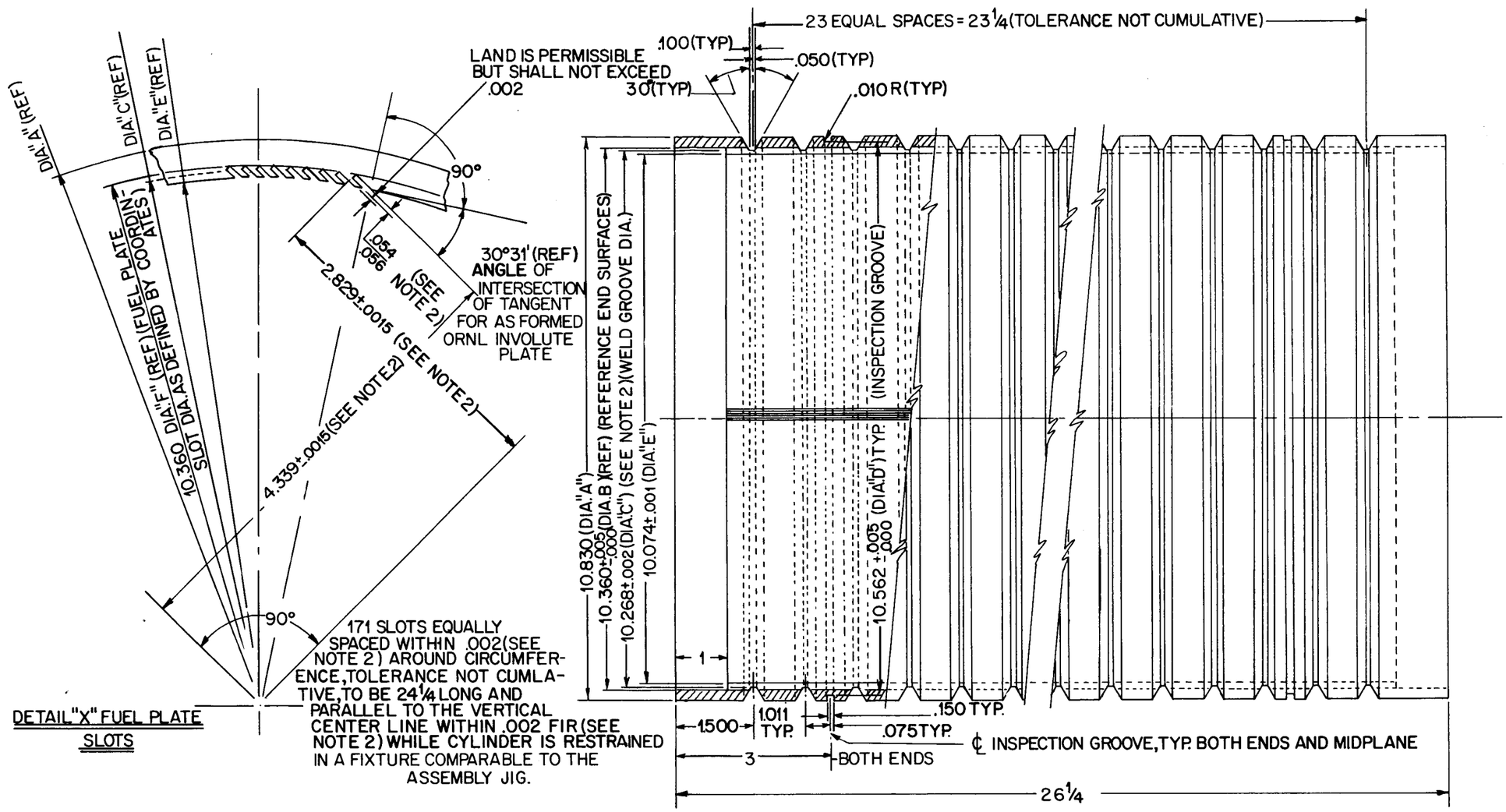

NOTES

1. DIAMETERS "B", "C", "D", "E" & "F" SHALL BE CONCENTRIC TO DIA. "A" WITHIN .002 FIR.
2. TOLERANCES REFERING TO NOTE 2 SHALL BE EVALUATED ON THE BASIS OF ORNL FABRICATION EXPERIENCE.
3. DETAILED PROCEDURES COVERING MACHINING AND INSPECTION SHALL BE SUBMITTED ON COMPLETION OF FABRICATION.

ORNL-DWG 68-12424

H.F.I.R. FUEL ELEMENT

INNER ANNULUS, OUTER SIDE PLATE 2

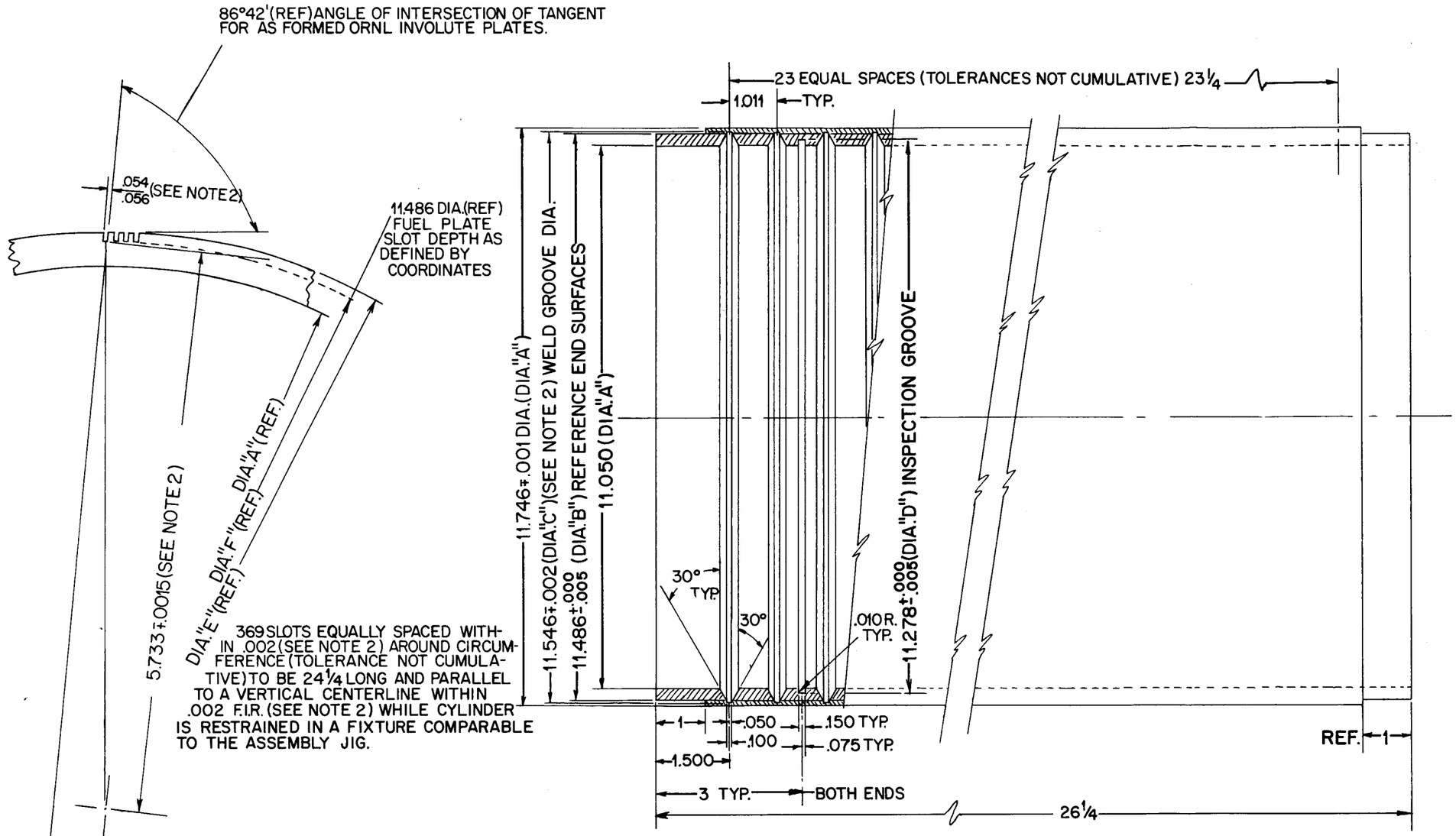

NOTES

1. DIAMETERS "A", "B", "C", "D", "E" & "F" SHALL BE CONCENTRIC WITHIN .002 F.I.R.
2. TOLERANCES REFERING TO NOTE 2 SHALL BE EVALUATED ON THE BASIS OF ORNL FABRICATION EXPERIENCE.
3. DETAILED PROCEDURES COVERING MACHINING AND INSPECTION SHALL BE SUBMITTED ON COMPLETION OF FABRICATION.

ORNL-DWG 68-12425

H.F.I.R. FUEL ELEMENT

OUTER ANNULUS, INNER SIDE PLATE 3

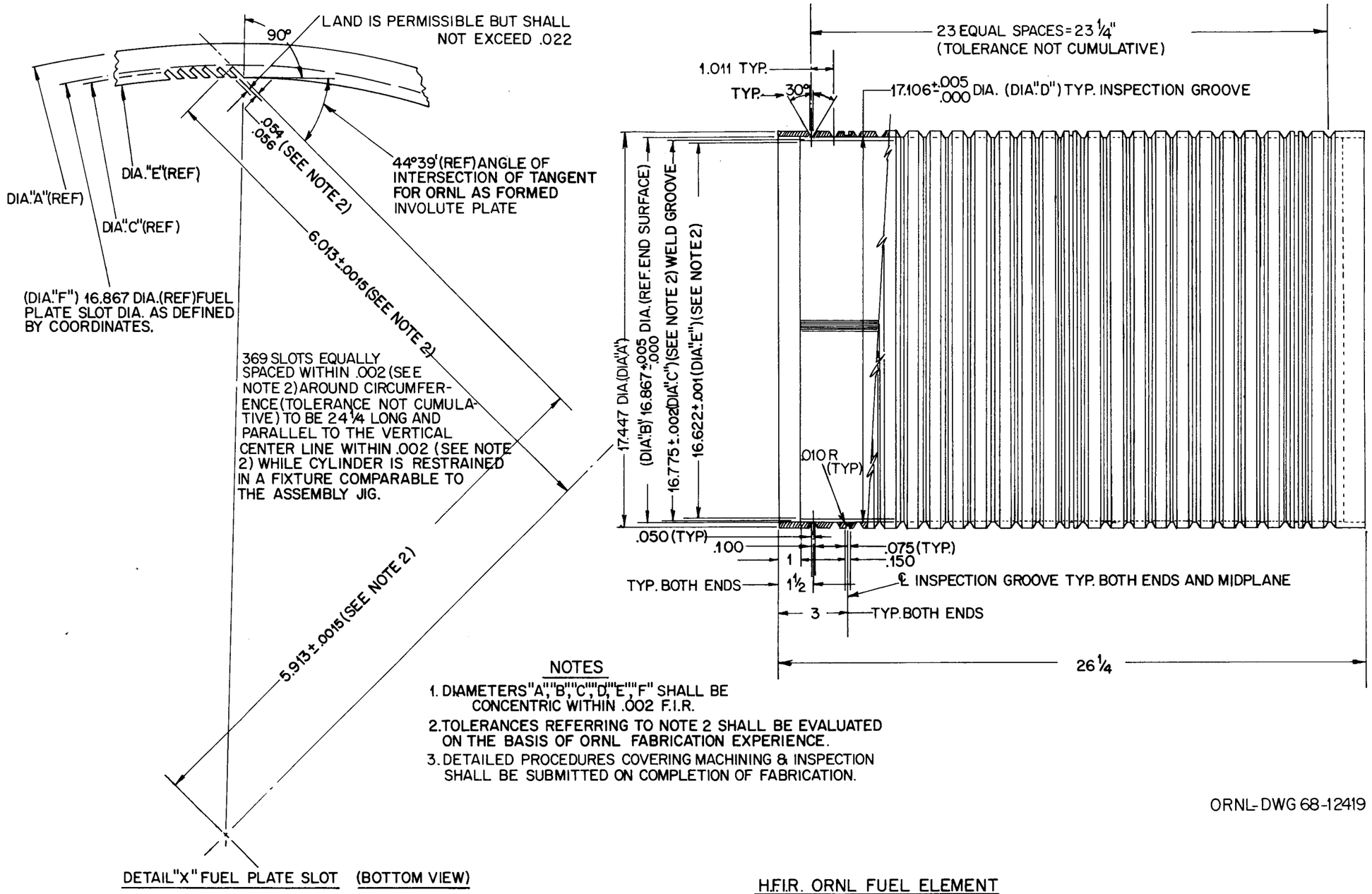

NOTES

1. DIAMETERS "A", "B", "C", "D", "E", "F" SHALL BE CONCENTRIC WITHIN .002 F.I.R.
2. TOLERANCES REFERRING TO NOTE 2 SHALL BE EVALUATED ON THE BASIS OF ORNL FABRICATION EXPERIENCE.
3. DETAILED PROCEDURES COVERING MACHINING & INSPECTION SHALL BE SUBMITTED ON COMPLETION OF FABRICATION.

ORNL-DWG 68-12419

H.F.I.R. ORNL FUEL ELEMENT
OUTER ANNULUS, OUTER SIDE PLATE 4

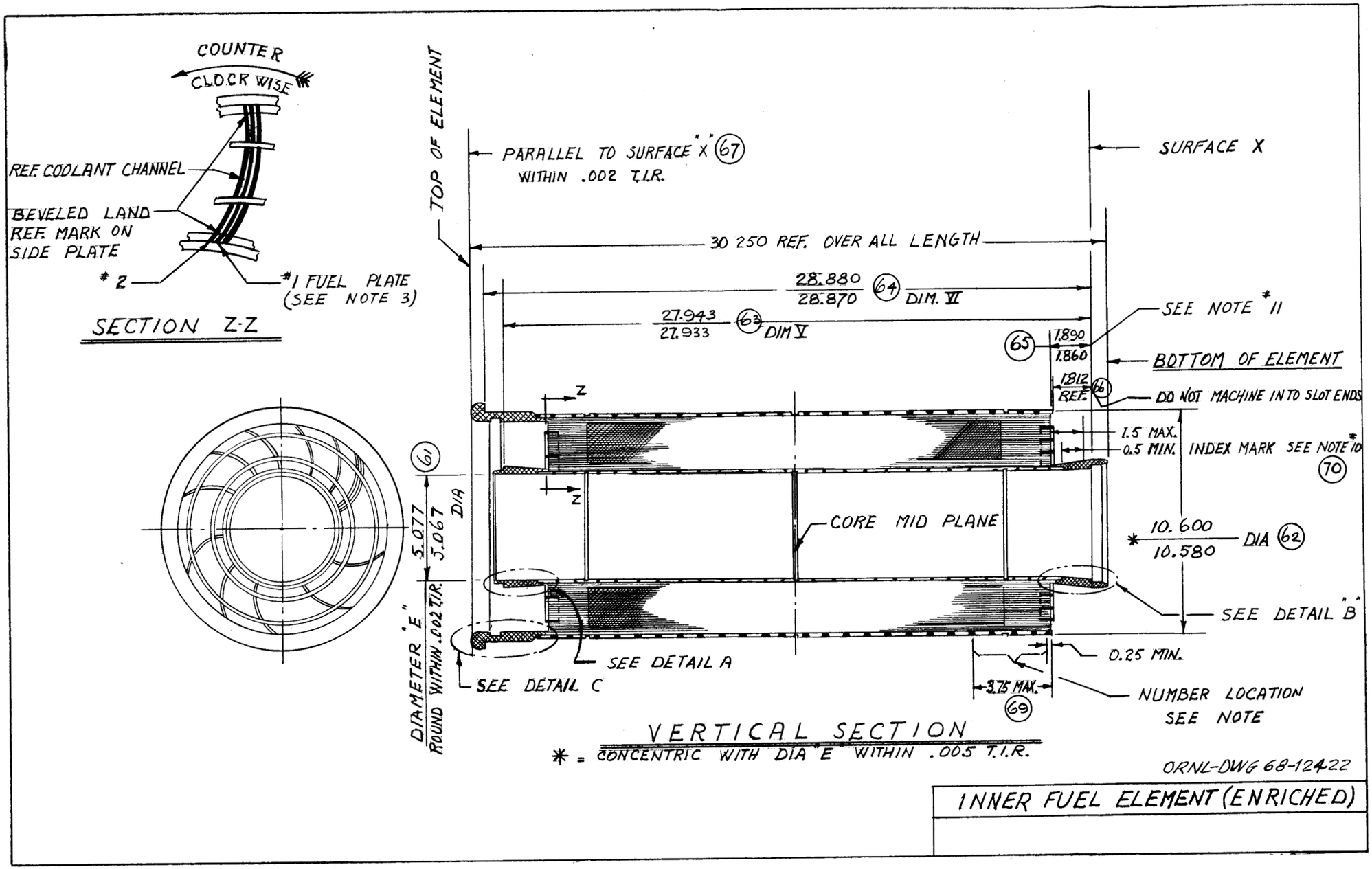
COUNTER CLOCK WISE
REF. COOLANT CHANNEL
BEVELED LAND REF. MARK ON SIDE PLATE
* 2
*1 FUEL PLATE (SEE NOTE 3)
SECTION Z-Z
TOP OF ELEMENT
PARALLEL TO SURFACE "X" (67) WITHIN .002 T.I.R.
SURFACE X
30 250 REF. OVER ALL LENGTH
28.880 / 28.870 (64) DIM. VI
27.943 / 27.933 (63) DIM V
SEE NOTE *11
(65) 1.890 / 1.860
BOTTOM OF ELEMENT
1.812 REF. (66)
DO NOT MACHINE INTO SLOT ENDS
1.5 MAX.
0.5 MIN.
INDEX MARK SEE NOTE *10 (70)
Z
(61)
5.077 / 5.067 DIA
DIAMETER "E" ROUND WITHIN .002 T.I.R.
CORE MID PLANE
* 10.600 / 10.580 DIA (62)
SEE DETAIL "B"
SEE DETAIL A
SEE DETAIL C
0.25 MIN.
3.75 MAX. (69)
NUMBER LOCATION SEE NOTE
VERTICAL SECTION
* = CONCENTRIC WITH DIA "E" WITHIN .005 T.I.R.
ORNL-DWG 68-12422
INNER FUEL ELEMENT (ENRICHED)

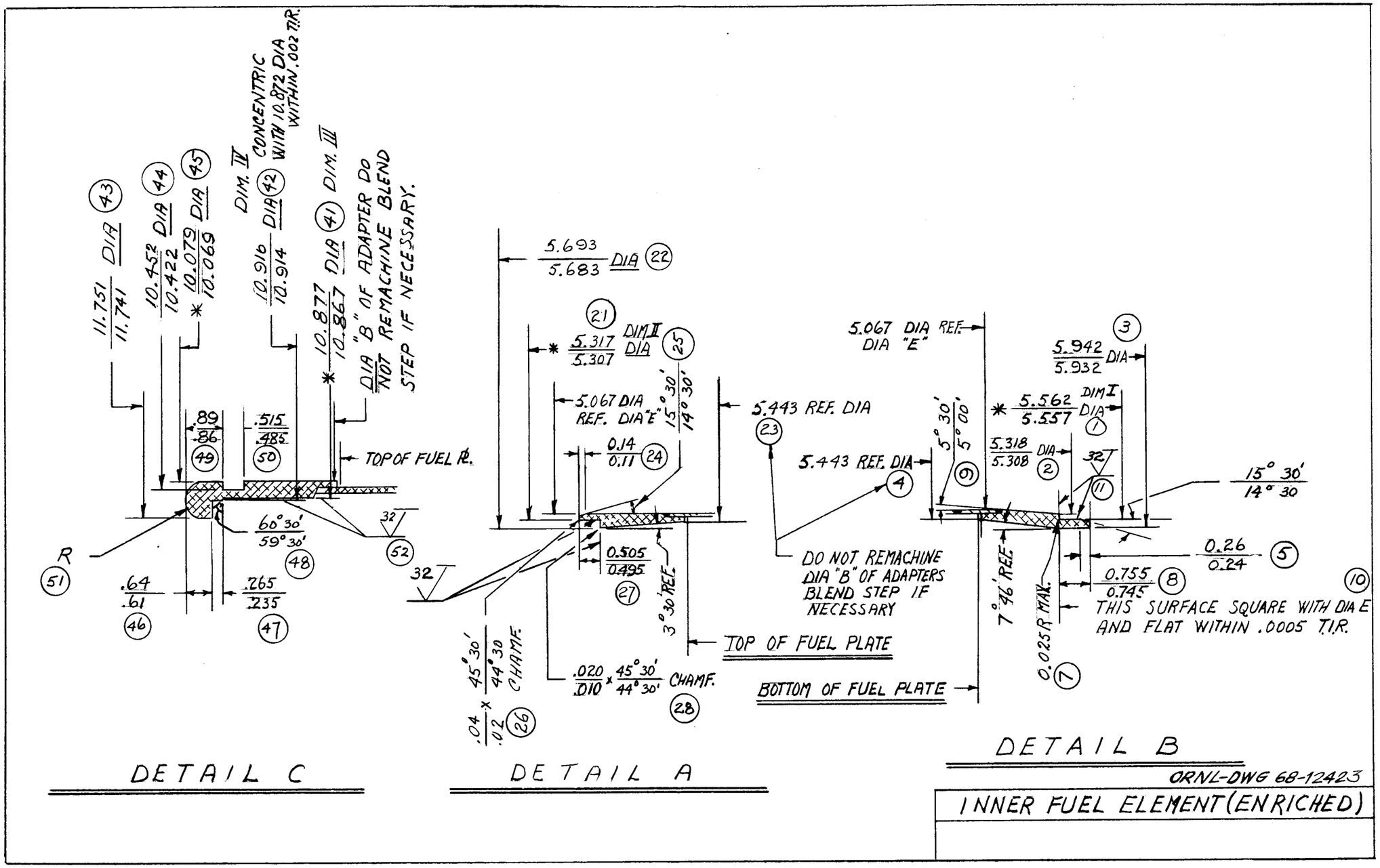
11.751 / 11.741 DIA (43)
10.452 / 10.422 DIA (44)
10.079 / 10.069 DIA (45)
DIM. IV
10.916 / 10.914 DIA (42) CONCENTRIC WITHIN 10.872 DIA WITHIN .002 T.I.R.
10.877 / 10.867 DIA (41) DIM. III
DIA "B" OF ADAPTER DO NOT REMACHINE BLEND STEP IF NECESSARY.
.89 / .86 (49)
.515 / .485 (50)
TOP OF FUEL PL.
60° 30' / 59° 30' (48)
32 (52)
R (51)
.64 / .61 (46)
.265 / .235 (47)
DETAIL C
5.693 / 5.683 DIA (22)
(21)
5.317 / 5.307 DIM II DIA (25)
5.067 DIA REF. DIA "E"
15° 30' / 14° 30'
0.14 / 0.11 (24)
0.505 / 0.495 (27)
3° 30' REF.
.020 / .010 × 45° 30' / 44° 30' CHAMF. (28)
45° 30' / 44° 30' CHAMF.
.04 / .02 × (26)
32
TOP OF FUEL PLATE
DETAIL A
5.067 DIA REF. DIA "E"
5.443 REF. DIA (23)
5.443 REF. DIA (4)
5° 30' / 5° 00' (9)
DO NOT REMACHINE DIA "B" OF ADAPTERS BLEND STEP IF NECESSARY
BOTTOM OF FUEL PLATE
7° 46' REF.
0.025 R MAX.
(7)
(3)
5.942 / 5.932 DIA
5.562 / 5.557 DIM I DIA (1)
5.318 / 5.308 DIA (2)
32 (11)
15° 30' / 14° 30
0.26 / 0.24 (5)
0.755 / 0.745 (8)
(10)
THIS SURFACE SQUARE WITH DIA E AND FLAT WITHIN .0005 T.I.R.
DETAIL B
ORNL-DWG 68-12423
INNER FUEL ELEMENT (ENRICHED)

Notes

1. (69) Identification numbers 2.5–3.0 in. high with individual digits 1.5–2.0 in. wide shall be engraved to a depth 0.010–0.015 in. on each fuel element in a circumferential direction in two locations in the same circumferential band but 180° apart. The top of the fuel element is to be the top of the numbers. The characters are to be formed by two 1/16 in. wide cuts spaced 0.125–0.175 in. outer edge to inner edge to produce a double-image character. Vibratool surface between double image. Do not touch bottom of wall-assurance groove. All digits to be uniform in appearance.
2. (60) The wall-assurance grooves shall be a minimum of 0.015 in. deep at final machining on both ends.
3. Fuel plate locations are numbered counterclockwise looking at the top end and the reference fuel plate location (number 1) is the location immediately adjacent to the bevel land in a counterclockwise direction (viewed from the top) the reference coolant channel is the channel that contains the beveled land.
4. Fuel plate to side plate attachment is to be by circumferential welds on 1 in. centers. If any meltthrough exists, it shall be limited to 0.01 in. measured across the width of the fuel plate from the top of the fuel plate slot.
5. Minimum finished side plate thickness shall be as follows:

   Inner fuel element, inner side plate – 0.048 in.
   Inner fuel element, outer side plate – 0.105 in.
6. The coolant channel thickness (separation distance between adjacent fuel plates) shall be 0.050 ± 0.010 in. measured perpendicular to the surface of the fuel plates.
7. The average coolant channel thickness at any elevation from the core midplane shall be 0.050 ± 0.006 in.
8. All fuel plates shall be oriented such that their respective ends are within ±0.015 in. of parallel planes which are 24 in. apart and normal to the fuel element longitudinal axis.
9. Each comb shall be welded to all fuel plates.
10. (70) An index mark 0.235–0.265 in. long, 0.015–0.025 in. deep and 0.030–0.050 in. wide shall be engraved on the bottom end adapter opposite the reference coolant channel on each fuel element. An arrow 0.360–0.390 in. long and with 0.030–0.050 in. wide swath shall be engraved perpendicular to the index mark to indicate the direction of channel numbering sequence. This arrow shall be pointing in a clockwise direction as viewed from the bottom end and shall be within 0.2–0.3 in. of the index mark.
11. Reference from average of high and low fuel plates.

INNER FUEL ELEMENT (ENRICHED)
8-7213-C

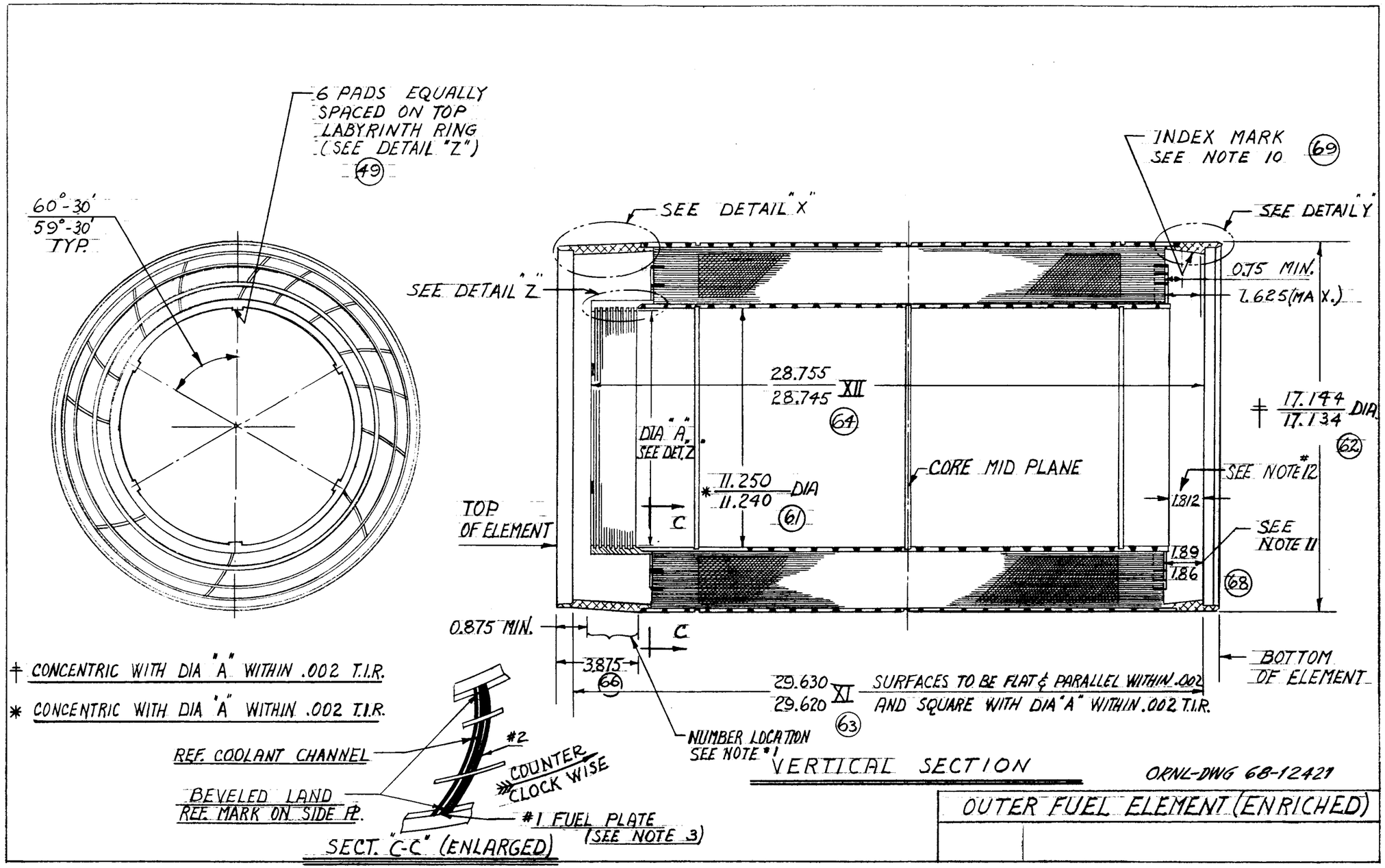
6 PADS EQUALLY SPACED ON TOP LABYRINTH RING (SEE DETAIL "Z")
49
60°-30'
59°-30'
TYP.
SEE DETAIL "X"
SEE DETAIL "Z"
INDEX MARK SEE NOTE 10
69
SEE DETAIL "Y"
0.75 MIN.
1.625 (MAX.)
28.755
28.745
XII
64
17.144
17.134
DIA
62
DIA "A" SEE DET. Z
11.250
11.240
DIA
61
CORE MID PLANE
SEE NOTE 12
1.812
TOP OF ELEMENT
C
SEE NOTE 11
1.89
1.86
68
0.875 MIN.
C
3.875
66
29.630
29.620
XI
63
SURFACES TO BE FLAT & PARALLEL WITHIN .002 AND SQUARE WITH DIA "A" WITHIN .002 T.I.R.
BOTTOM OF ELEMENT
NUMBER LOCATION SEE NOTE #1
VERTICAL SECTION
ORNL-DWG 68-12421
OUTER FUEL ELEMENT (ENRICHED)
CONCENTRIC WITH DIA "A" WITHIN .002 T.I.R.
CONCENTRIC WITH DIA "A" WITHIN .002 T.I.R.
REF. COOLANT CHANNEL
#2
COUNTER CLOCK WISE
BEVELED LAND REF. MARK ON SIDE P.
#1 FUEL PLATE (SEE NOTE 3)
SECT. "C-C" (ENLARGED)

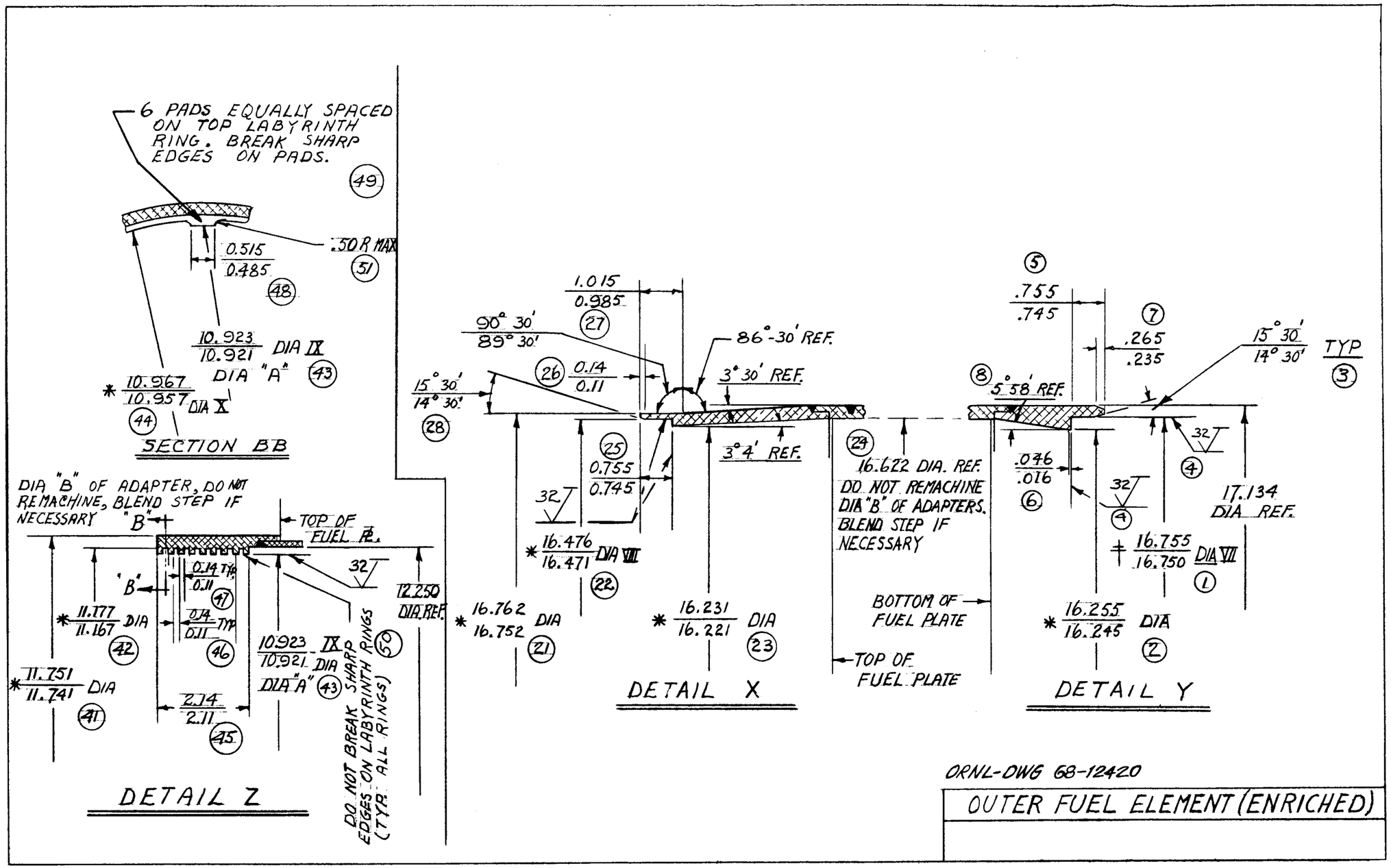
6 PADS EQUALLY SPACED ON TOP LABYRINTH RING. BREAK SHARP EDGES ON PADS.
49
.50 R MAX
51
0.515
0.485
48
10.923
10.921
DIA IX
DIA "A"
43
* 10.967
10.957
DIA X
44
SECTION BB
DIA "B" OF ADAPTER, DO NOT REMACHINE, BLEND STEP IF NECESSARY
"B"
TOP OF FUEL PL.
32
0.14 TYP
0.11
47
"B"
* 11.777
11.167
DIA
42
0.14 TYP
0.11
46
12.250 DIA REF.
10.923
10.921
IX
DIA
DIA "A"
43
DO NOT BREAK SHARP EDGES ON LABYRINTH RINGS (TYP. ALL RINGS)
50
* 11.751
11.741
DIA
41
2.14
2.11
45
DETAIL Z
1.015
0.985
27
90° 30'
89° 30'
86°-30' REF.
26
0.14
0.11
3° 30' REF.
15° 30'
14° 30'
28
25
0.755
0.745
3° 4' REF.
24
16.622 DIA. REF.
DO NOT REMACHINE DIA "B" OF ADAPTERS. BLEND STEP IF NECESSARY
32
* 16.476
16.471
DIA VIII
22
* 16.762
16.752
DIA
21
* 16.231
16.221
DIA
23
BOTTOM OF FUEL PLATE
TOP OF FUEL PLATE
DETAIL X
5
.755
.745
7
.265
.235
15° 30'
14° 30'
TYP
3
8
5° 58' REF.
32
4
.046
.016
6
32
9
17.134
DIA REF.
* 16.755
16.750
DIA VII
1
* 16.255
16.245
DIA
2
DETAIL Y
ORNL-DWG 68-12420
OUTER FUEL ELEMENT (ENRICHED)

Notes

1. (66) Identification numbers 2.5–3.0 in. high with individual digits 1.5–2.0 in. wide shall be engraved to a depth 0.010–0.015 in. on each fuel element in a circumferential direction in two locations in the same circumferential band but 180° apart. The top of the fuel element is to be the top of the numbers. The characters are to be formed by two 1/16 in. wide cuts spaced 0.125–0.175 in. outer edge to inner edge to produce a double image character. All digits to be uniform in appearance.
2. (65) The wall-assurance grooves shall be a minimum of 0.015 in. deep at final machining on both ID and OD.
3. Fuel plate locations are numbered counterclockwise looking at the top end and the reference fuel plate location (number 1) is the location immediately adjacent to the bevel land in a counterclockwise direction (viewed from the top) the reference coolant channel is the channel that contains the beveled land.
4. Fuel plate to side plate attachment is to be by circumferential welds on 1 in. centers if any melt-through exists it shall be limited to 0.01 in. measured across the width of the fuel plate from the top of the fuel plate slot.
5. Minimum finished side plate thickness shall be as follows:

   Outer fuel element, inner side plate – 0.108 in.
   Outer fuel element, outer side plate – 0.128 in.
6. The coolant channel thickness (separation distance between adjacent fuel plates) shall be 0.050 ± 0.010 in. measured perpendicular to the surface of the fuel plates.
7. The average coolant channel thickness at any elevation from the core midplane shall be 0.050 ± 0.006 in.
8. All fuel plates shall be oriented such that their respective ends are within ±0.015 in. of parallel planes which are 24 in. apart and normal to the fuel element longitudinal axis.
9. Each comb shall be welded to all fuel plates.
10. (69) An index mark 0.235–0.265 in. long, 0.015–0.025 in. deep and 0.030–0.050 in. wide shall be engraved on the ID of the bottom end adapter opposite the reference coolant channel on each fuel element. An arrow 0.360–0.390 in. long and with 0.030–0.050 in. wide swath shall be engraved perpendicular to the index mark to indicate the direction of channel numbering sequence. This arrow shall be pointing in a clockwise direction as viewed from the bottom end and shall be within 0.2–0.3 in. of the index mark.
11. Reference from average of high and low fuel plates.
12. Do not machine into slot ends.

OUTER FUEL ELEMENT (ENRICHED)

8-7214-C

APPENDIX B

Sample Inspection Reports

HFIR REACTOR ELEMENT DIMENSIONAL INSPECTION SUMMARY

OUTER Annulus — INNER Side Plate

Diameters

Dia."A" Nominal 11.050 ±.005 Max. 11.049 Min. 11.037

Dia. B Nominal 11.486 +.000 −.005 Max. 11.4802 Min. 11.473 Concentric to "A" .002 TIR

Dia. C Nominal 11.546 ±.002 Max. 11.553 Min. 11.540 Concentric to "A" .001 TIR

Dia. D Nominal 11.278 +.000 −.005 Max. 11.285 Min. 11.2732 Concentric to "A" .0015 TIR

Dia. E Nominal 11.746 ±.001 Max. 11.748 Min. 11.7388 Concentric to "A" .0017 TIR

Dia. F Nominal REF. DIM. Max. _____ Min. _____ Concentric to "A" .005 TIR

Remarks _____

Slot Details Every 90 Degrees

Width	Nominal .054/.056	0 .055	90 .055	180 .055	270 .055
Straightness	Nominal .002 TIR	0 .002	90 .0023	180 .0018	270 .0015
Coordinates*	Nominal .304 ±.0015	0 .304	90 .303	180 .303	270 .303
	Nominal 5.733 ±.0015	0 5.735	90 5.737	180 5.737	270 5.737
Slot penetration into weld groove	Nominal .030	0 .034	90 .034	180 .032	270 .032

Remarks MEASURED WHILE IN RESTRAINED CONDITION

Minimun Wall Thickness (Before final machining) **Surface "A" to Bottom of Slot**

Minimun .319

Remarks _____

General Condition Of Side Plate At Time Of Inspection

Remarks _____

ORIENTATION OF SIDE PLATE FOR
DIMENSIONAL INSPECTION

Top End:	As designated by Detail "A" of Drawing No. D-42128-A.
No. 1 Slot:	Identified by scribe line in bottom of top inspection groove with arrow indicating direction of numbering sequence of every thirty (30) slots to coincide with location of inspection groove depth measurements.
No. 1 Weld Groove:	First groove from top end of side plate middle groove is number twelve (12).

REACTOR ELEMENT

OUTER ANNULUS, INNER SIDE PLATE

Dia. "A" 11.050 ± .005 Dia. "B" 11.486 $^{+.000}_{-.005}$

Slot No.	Top	Middle	Bottom		Top	Middle	Bottom
1	11.0455	11.044	11.049		11.478		11.4802
30	11.0435	11.044	11.047		11.477		11.4788
60	11.0418	11.0435	11.044		11.475		11.4755
90	11.0415	11.037	11.0415		11.4745		11.4738
120	11.042	11.035	11.041		11.475		11.473
150	11.044	11.0385	11.044		11.477		11.475
180	11.045	11.0435	11.048		11.478		11.4795
210							
240							
270							
300							
330							
360							

Temp. 68°

REACTOR ELEMENT

OUTER ANNULUS, INNER SIDE PLATE

Dia. "C" 11.546 ±.002 Dia. "D" 11.278 +.000 −.005

Slot No.	Top	Middle	Bottom		Top	Middle	Bottom
1	11.551	11.5485	11.5525		11.285	11.2795	11.2795
30	11.5495	11.548	11.551		11.284	11.282	11.2795
60	11.5478	11.547	11.5485		11.281	11.280	11.2765
90	11.548	11.541	11.5455		11.2815	11.276	11.2735
120	11.549	11.540	11.546		11.280	11.2735	11.2732
150	11.551	11.5435	11.549		11.2815	11.276	11.2755
180	11.553	11.5475	11.552		11.285	11.281	11.2793
210							
240							
270							
300							
330							
360							

Temp. 68°

REACTOR ELEMENT

OUTER ANNULUS, INNER SIDE PLATE

Dia. "E" 11.746 ± .001 Dia.

Slot No.	Top	Middle	Bottom		Top	Middle	Bottom
1	11.743	11.7472	11.7445				
30	11.7418	11.748	11.744				
60	11.7403	11.7462	11.7405				
90	11.740	11.7435	11.7393				
120	11.7408	11.7438	11.7388				
150	11.742	11.7453	11.741				
180	11.7438	11.7478	11.7443				
210							
240							
270							
300							
330							
360							

Temp. 68°

REACTOR ELEMENT

OUTER ANNULUS, INNER SIDE PLATE

INSPECTION GROOVE DEPTH

Slot No.	Top	Middle	Bottom	
1	.1205	.118	.116	
30	.1205	.1185	.1155	
60	.1205	.1185	.1155	
90	.1205	.118	.1155	
120	.1205	.118	.116	
150	.1205	.118	.116	
180	.1205	.119	.1155	
210	.1205	.1185	.1145	
240	.1205	.1185	.115	
270	.1205	.118	.115	
300	.1195	.118	.116	
330	.1195	.1185	.1145	
360	.120	.119	.115	

WALL THICKNESS (REFERENCE ENDS)

Slot No.		TOP	BOTTOM	
1		.2178	.2158	
30		.2169	.216	
60		.217	.2162	
90		.2176	.2162	
120		.2177	.2163	
150		.2183	.2162	
180		.219	.2159	
210		.219	.2155	
240		.2188	.2153	
270		.2186	.2156	
300		.2183	.2157	
330		.2178	.2155	
360		.2175	.2157	

TEMP. 68

MINIMUM WALL THICKNESS

SLOT NO.

TEMP. 68°

Weld Groove No.	1	30	60	90	120	150	180	210	240	270	300	330	360
1	.220	.222	.220	.220	.219	.220	.222	.221	.221	.222	.222	.223	.221
2	.220	.222	220	220	219	220	222	221	222	223	223	224	222
3	221	222	221	220	221	223	223	223	223	224	225	225	224
4	221	222	221	221	221	223	225	223	223	224	225	225	224
5	222	223	221	222	222	223	224	223	223	224	225	225	224
6	222	223	221	221	222	223	224	223	223	224	225	225	224
7	221	223	221	222	223	223	224	223	224	225	225	225	224
8	221	222	221	222	223	223	225	223	224	225	225	225	224
9	222	222	221	222	223	224	224	223	224	224	225	226	224
10	221	222	222	222	224	224	224	223	223	224	225	226	224
11	222	222	221	223	224	225	224	223	223	225	225	226	224
12	222	222	221	223	225	224	224	223	223	225	225	226	224
13	222	222	220	222	223	223	224	222	223	224	224	226	224
14	221	222	220	222	223	223	223	222	223	223	223	225	223
15	222	223	221	223	223	223	223	222	222	223	223	224	223
16	222	223	222	223	223	222	223	222	222	222	223	224	223
17	222	223	222	223	223	223	223	222	222	223	222	224	222
18	222	223	222	223	223	223	223	222	222	222	223	223	222
19	221	223	222	223	223	223	223	222	221	222	223	223	222
20	221	223	222	222	224	223	223	222	221	222	222	223	221
21	221	222	222	222	222	222	223	221	221	221	221	223	221
22	220	222	223	222	222	221	221	220	220	221	221	223	221
23	220	222	222	221	221	221	221	219	220	221	220	221	220
24	219	222	222	221	221	222	222	219	220	220	220	220	220

SLOT PENETRATION INTO WELD GROOVE

SLOT NO.

NOMINAL = .030 TEMP 68°

Weld Groove No.	1	30	60	90	120	150	180	210	240	270	300	330	360
1	.034	.032	.034	.034	.035	.035	.032	.033	.033	.032	.032	.032	.033
2	.032	.030	.032	.032	.034	.033	.030	.031	.030	.029	.030	.028	.030
3	.031	.031	.032	.033	.032	.030	.029	.030	.030	.029	.028	.028	.028
4	.032	.031	.032	.033	.032	.031	.029	.031	.030	.030	.028	.029	.029
5	.031	.032	.032	.031	.031	.031	.029	.030	.030	.030	.028	.029	.029
6	.030	.030	.032	.032	.031	.030	.029	.030	.030	.029	.028	.028	.029
7	.031	.030	.032	.031	.030	.030	.029	.030	.029	.028	.028	.028	.029
8	.031	.031	.032	.031	.030	.030	.028	.030	.029	.028	.028	.028	.029
9	.031	.031	.032	.031	.030	.029	.029	.030	.029	.029	.028	.027	.029
10	.032	.031	.031	.031	.029	.029	.029	.030	.030	.029	.028	.027	.029
11	.031	.030	.032	.030	.029	.028	.029	.030	.030	.028	.028	.027	.029
12	.030	.031	.032	.030	.028	.029	.029	.030	.030	.028	.028	.027	.029
13	.030	.031	.032	.030	.028	.029	.028	.030	.030	.028	.028	.027	.029
14	.031	.030	.031	.029	.027	.027	.028	.029	.029	.028	.028	.027	.029
15	.030	.029	.030	.029	.029	.029	.028	.030	.030	.030	.029	.028	.029
16	.031	.031	.032	.031	.031	.033	.032	.033	.032	.032	.031	.030	.031
17	.028	.028	.029	.028	.028	.028	.028	.028	.028	.028	.028	.029	.029
18	.029	.028	.030	.028	.028	.027	.028	.029	.029	.028	.029	.028	.028
19	.030	.028	.029	.028	.027	.027	.028	.028	.028	.028	.028	.029	.028
20	.030	.029	.030	.029	.028	.028	.028	.029	.029	.029	.029	.029	.029
21	.029	.029	.029	.029	.029	.029	.028	.029	.030	.030	.030	.029	.029
22	.031	.029	.028	.030	.029	.030	.030	.031	.031	.030	.030	.029	.030
23	.032	.030	.029	.029	.029	.030	.030	.031	.030	.030	.031	.030	.031
24	.032	.029	.029	.029	.030	.029	.029	.031	.030	.031	.031	.030	.031

DIMENSIONS TAKEN DURING MACHINING

Temp. 85°

	NOMINAL	AS MEASURED
DIA. "B"	11.486 $^{+.005}_{-.000}$	11.482 TO 11.483
DIA. "E"	11.746 ±.005	11.746

NOTE: These were the only dimensions taken due to CONFLICTING work requirements.

SLOT STRAIGHTNESS

EVERY 90° TEMP 68°

SLOT NO.		STRAIGHT WITHIN							
1		.002							
90		.0023							
180		.0018							
270		.0015							

MACHINING COORDINATES

EVERY 90° TEMP. 70°

		NOMINAL .304 ± .0015			NOMINAL 5.733 ± .0015				
	0°	.304			5.735				
	90°	.303			5.737				
	180°	.303			5.737				
	270°	.303			5.737				

CONCENTRICITY

TEMP. 68°

			Top TIR	MIDDLE TIR	Bottom TIR
DIA. "A" DIA. "B"	(INSIDE DIAMETER) (REFERENCE ENDS)		.002		.001
DIA. "A" DIA. "C"	(WELD GROOVE)		.001	.001	.001
DIA. "A" DIA. "D"	(INSPECTION GROOVE)		.001	.001	.0015
DIA. "A" DIA. "E"	(OUTSIDE DIAMETER)		.0015		.0017
DIA. "A" DIA. "F"	(BOTTOM OF SLOT)		.004	.005	.003

Outer Annulus, Inner Side Plate

Slot Inspection

Temp. 68°

Slots 1 thru 175 and 179 thru 369 measure .054-.055

Slots 176, 177 and 178 measure .045 due to lands being damaged at bottom end. These slots would measure .055 throughout their length except for this.

NOTE: SLOT SPACING (WITHIN .002) WAS INSPECTED by machine shop inspector and verified by Inspection Engineering.

MISCELLANEOUS DIMENSIONS

OUTER INNER

	Nominal	Actual
Over All Length	$26\frac{1}{4} \pm \frac{1}{64}$	$26\frac{1}{4}$
Slotted Surface Length	$24\frac{1}{4} \pm \frac{1}{64}$	$24\frac{1}{4}$
Weld Groove Spacing	$1.011 \pm .005$	$1.008 - 1.015$
Weld Groove Bevel	$60°$ incl. $\pm 2°30'$	$60°$
Weld Groove Root Width.	$.100 \pm .005$	$.100 - 1.005$

INTRA-LABORATORY CORRESPONDENCE

OAK RIDGE NATIONAL LABORATORY

July 2, 1965

TO: G. M. Adamson

SUBJECT: Final Inspection of Outer HFIR Reactor Fuel Element

Attached are the data sheets showing the results of the dimensional inspection of the Outer HFIR Reactor Element No. 1. The final machining results were very good with only two diameters out of tolerance 0.001 inch before the element was removed from the machine. After removal from the machine the maximum out of tolerance was 0.009 inch.

The inspection grooves depths indicate a variation of 0.021 inch in the remaining wall thickness of the outer side plate. The inspection grooves in the inner side plate were completely removed in some areas and the remaining wall thickness cannot be determined.

Radiographs of the end extension welds are enclosed for your files. They show considerable fine porosity is present but the weld penetration is greatly improved in this element with essentially no lack of penetration.

INSPECTION ENGINEERING DEPARTMENT

K. K. Klindt

for E. C. Miller

KKK:pc

Attachments
Data Sheets
Radiographs

cc: A. L. Boch
G. A. Bowden
R. M. Fuller
K. K. Klindt
IR-4982

UCN-430
(3 5-61)

HFIR REACTOR ELEMENT, OUTER ANNULUS - Dwg. D-42126-Rev. D

	Dimension				Concentricity		
	Specified Dimension	Measured On Machine	Measured In Free Condition		Specified	Measured In Free Condition	TIR On Machine
			Vertical Section				
Dim. IX	10.922 ±.001 Dia.	10.924	10.923-10.928				.004
VII	16.750 ±.005/.000	16.752	16.741-16.754		.002		.0025
VIII	16.471 ±.005/.000	16.475	16.471-16.477		.005	.004	
	17.134 ±.010/.000	17.142-17.144	17.143-17.146 17.137-17.146	Top Bot.	.002	Not Taken	.0025 .002
	16.757 ±.005	16.7575	16.750-16.757		.005	.005	Within .005
	11.746 ±.005	11.740	11.734-11.743		.005	.004	Within .005
	11.250 ±.010	11.248-11.2485 11.252-11.2528	11.245-11.256 11.246-11.257	Top Bot.	.005	.006 Not Taken	Within .005
	11.172 ±.005	11.167-11.169	11.173-11.178		.005	.002	Within .005
XI	29.625 ±.005	29.622	29.623	Faces	Flat & Parallel		Within .002
	28.750 ±.005		28.748				
	1.875 ± .015		1.865-1.875				
	1.812	1.812	1.812				
			Detail "X"				
	16.226 ±.005	16.224	16.221-16.226		.005	.004	
	.750 ± .005	.751	.7505				
	1/8 ± 1/64	1/8	1/8				
	3°30'±0°30'	3°30'	3°30'				
	90°±0°30'	90°	90°				
	15°±0°30'	15°	15°				
	3°4'±0°30'	3°5'	3°5'				

	Dimension			Concentricity		
	Specified Dimension	Measured On Machine	Measured In Free Condition	Specified	Measured In Free Condition	TIR On Machine
			Detail "Y"			
	16.250 ±.005	16.251	16.244-16.254	.005	Not Taken	Within .005
	.750 ± .005	.7515	.751			
	1/4 ± 1/64	1/4	1/4			
	1/32 ± 1/64	1/32	1/32			
Ref.	5°58'±0°30'	6°	6°			
	15°±0°30'	15°	15°			
			Detail "Z"			
Dim. X	10.962 ±.005	10.959	10.955-10.960	.005	.003	Within .005
	2-1/8 ± 1/64	2-1/8	2-1/8			
	1/8 ± 1/64	1/8	1/8			

Inspection Groove Depth

	Outer	Inner
Top	.022 - .043	.000 - .012
Middle	.050 - .067	.000 - .015
Bottom	.024 - .045	.000 - .008

Note: All measurements taken in free condition are maximum and minimum.

INTRA-LABORATORY CORRESPONDENCE

OAK RIDGE NATIONAL LABORATORY

June 21, 1965

TO: G. M. Adamson

SUBJECT: Final Inspection of Inner HFIR Reactor Element

Attached are the data sheets showing the results of the dimensional inspection of the Inner HFIR Reactor Element. The final machining results were very good with no critical dimensions out of tolerance. The maximum out of tolerance was -0.0012 inch on a reference dimension.

Radiography of the end extension welds shows that lack of penetration was present around most of the circumference.

INSPECTION ENGINEERING DEPARTMENT

K. K. Klindt

for E. C. Miller

KKK:pc

Attachments

cc: A. L. Boch
G. A. Bowden
R. M. Fuller
K. K. Klindt
IR-4982

UCN-430
(3 5-61)

INNER HFIR REACTOR ELEMENT #1

	DIMENSION				CONCENTRICITY	
	Specified		Measured on Machine	Measured in Free Condition	Specified	Measured
	10.590 ± .010	Top	10.593	10.5935/10.5950	.005	.0025
		Middle	10.593	10.5935		
		Bottom	10.593	10.5935		
Ref.	11.746 ±.005		11.7398			
	5.067 $\pm^{.010}_{.000}$	Top	5.071	5.0665/ 5.0710	(Round within .0008 on machine.)	
		Middle		5.0668/ 5.0715		
		Bottom		5.0676/ 5.0728		
Ref.	30.250		30.240			
Dim. V	27.938 ±.005		27.934			
Dim. VI	28.875 ±.005		28.872			
	1.812 ±.005		1.806			

*Roundness specified within .002.

		Detail "A"			
	5.688 ±.005	5.688			
Dim. II	5.312 ±.005	5.3135		.005	.0015
	.500	.4995			
	.015 x 45°	.015 x 45°			
	1/32 x 45°	1/32 x 45°			
	1/8	1/8			
	15°	15°			
	3° - 30'	3° - 30'			
		Detail "B"			
	5.937 ±.005	5.9385			
Dim. I	5.557 ±.005	5.558		.005	.0017
	5.313 ±.005	5.313			
	.750 ±.005	.754			
	5°	5°			

INNER HFIR REACTOR ELEMENT #1

	DIMENSION			CONCENTRICITY	
	Specified	Measured on Machine	Measured in Free Condition	Specified	Measured
Surface "X" not a 32 finish (scored).					
Surface "X" not inspected for squareness to dia. "E" at this time.					
	15°	15°			
	1/4	1/4			
		Detail "C"			
Dim. IV	10.915 ±.001	10.9155	10.9155/10.9160	.002	.0002
Dim. III	10.872 ±.005	10.873	10.8730/10.8740	.005	.0025
	10.074 ±.005	10.074		.005	.0020
	10 7/16	10.434			
	7/8	.876			
	1/2	.502			
	5/8	5/8			
	1/4	1/4			
	60°	60°			

NOTE: All concentricity measurements were made on machine.

Inspection Groove Depths

	Outer	Inner
Top	.0015	.003 to .008
Middle	.008	.005 to .008
Bottom	.010	.006 to .008

ORNL-4342
UC-25 – Metals, Ceramics, and Materials
TID-4500

INTERNAL DISTRIBUTION

1–3. Central Research Library
4–5. ORNL – Y-12 Technical Library Document Reference Section
6–45. Laboratory Records
46. Laboratory Records, ORNL RC
47. ORNL Patent Office
48–52. G. M. Adamson, Jr.
53. R. J. Beaver
54. M. Bender
55. A. L. Boch
56. G. E. Boyd
57. W. D. Burch
58. T. E. Cole
59. C. W. Collins
60. G. L. Copeland
61. J. A. Cox
62. J. E. Cunningham
63. R. W. Derby
64. R. G. Donnelly
65. J. H. Erwin
66. D. E. Foster
67. J. H Frye, Jr.
68. D. A. Gardiner
69. G. M. Goodwin
70. J. P. Hammond
71–73. M. R. Hill
74. L. B. Holland
75. R. T. King
76. R. W. Knight
77. R. W. McClung
78. J. R. McWherter
79. M. M. Martin
80. T. M. Nilsson
81. S. Peterson
82. J. W. Reynolds
83. G. M. Slaughter
84. D. A. Sundberg
85. A. A. Walls
86. T. N. Washburn
87. C. M. Adams, Jr., (consultant)
88. Leo Brewer (consultant)
89. L. S. Darken (consultant)
90. J. A. Krumhansl (consultant)

EXTERNAL DISTRIBUTION

91–96. J. Binns, Metals and Controls Corporation, Attleboro, Mass.
97. D. F. Cope, RDT, SSR, AEC, Oak Ridge National Laboratory
98. W. Francis, Idaho Nuclear Corporation, P. O. Box 1845, Idaho Falls, Idaho, 83401
99. R. Jones, Research Materials Branch, AEC, Washington
100. E. E. Kintner, Reactor Engineering, AEC, Washington
101. V. Kolba, 9700 Cass Avenue, Argonne National Laboratory, Argonne, Illinois
102. D. Rausch, AEC, Washington
103. J. M. Simmons, Division of Reactor Development and Technology, AEC, Washington
104. E. E. Stansbury, the University of Tennessee
105. J. A. Swartout, Union Carbide Corporation, New York
106. W. W. Ward, AEC, Washington
107. Laboratory and University Division, AEC, Oak Ridge Operations
108–343. Given distribution as shown in TID-4500 under Metals, Ceramics and Materials category (25 copies – CFSTI)