OAK RIDGE NATIONAL LABORATORY LIBRARIES
3 4456 0570416 4

CENTRAL RESEARCH LIBRARY
DOCUMENT COLLECTION

OAK RIDGE NATIONAL LABORATORY
OPERATED BY
UNION CARBIDE CORPORATION
NUCLEAR DIVISION
POST OFFICE BOX X
OAK RIDGE, TENNESSEE 37830

**ORNL-MIT-** 86

DATE: June 4, 1969 COPY NO. 21

SUBJECT: Analytical Study of the Reentry Tube Boiler Concept

AUTHOR: S.F. Koch and Y.A. Butruille

Consultants: A.P. Fraas, R.E. Helms, R.E. MacPherson, and J.M. Baker

## ABSTRACT

The operation of a reentry tube boiler has been described mathematically by energy balance and transport equations for heat flow within the boiler. A digital computer program was written to solve the system of equations for successive small increments of the boiler over which the physical properties of the fluid could be considered constant. By this method the temperature profiles of the steam and water inside the boiler may be determined. No complete analyses have yet been performed. Recommendations for refinement of the computer program are made. These should allow prediction of the steady state boiler temperature profile to within the accuracy with which the heat transfer correlations are known.

OAK RIDGE NATIONAL LABORATORY
CENTRAL RESEARCH LIBRARY
DOCUMENT COLLECTION
LIBRARY LOAN COPY
DO NOT TRANSFER TO ANOTHER PERSON
If you wish someone else to see this document, send in name with document and the library will arrange a loan.

Oak Ridge Station
School of Chemical Engineering Practice
Massachusetts Institute of Technology

[redacted]

CONTENTS

Page

1. Summary ..... 4
2. Introduction ..... 4
3. Mathematical Procedure ..... 5
4. Heat Transfer Coefficients ..... 9
   4.1 Inside of Outer Tube ..... 10
   4.2 Outside of Inner Tube ..... 10
   4.3 Inside of Inner Tube ..... 11
5. Results ..... 12
6. Discussion of Results ..... 13
7. Conclusions ..... 14
8. Recommendations ..... 14
9. Acknowledgement ..... 15
10. Appendix ..... 16
   10.1 *CREEP* - A Clever Routine Emulating the Essence of the Process ..... 16
   10.2 *CREEP* Listing ..... 36
   10.3 Input Data for *CREEP* ..... 64
   10.4 Experimental Data for Simulation ..... 65
   10.5 Non-Experimental Simulation ..... 67
   10.6 Appendix to Mathematical Procedure ..... 68
   10.7 Nomenclature ..... 69
   10.8 Nomenclature for *CREEP* ..... 71
   10.9 Special Nomenclature for Subprograms ..... 73
   10.10 Location of Original Data ..... 74
   10.11 Literature References ..... 74

## 1. SUMMARY

The high melting point of fluoride salt in a molten salt reactor and the high temperatures of radioisotopic heat sources pose complex design problems for the associated steam boiler. The reentry tube boiler (3) is a new boiler concept in which water preheats, boils, and superheats slightly while flowing up an inner tube. The resulting superheated steam then flows down through an annular region around the inner tube. The steam in the annular region acts as a buffer zone between the high temperature heat source and the cold feed water, thereby reducing the temperature gradient and lessening the possibility of flow instabilities and thermal shock. This boiler has been found experimentally to virtually eliminate flow instabilities during hot startup and low load operating conditions (11).

It was desired to study operation of the reentry tube boiler at pressures higher than had been used in previous experimental work. The method of investigation selected was that of mathematical modeling of the system for solution on a digital computer.

Six energy balance and transport equations were written to describe the flow of heat within the boiler, and a computer program was written to solve these equations for successive incremental tube lengths over which the fluid physical properties could be considered constant.

Development of the program was not completed. The study did, however, yield useful information about operation of the program and the following conclusions were drawn:

1. The physical model is representative of actual reentry tube boiler operation.

2. When modifications are complete, the program will describe the boiler tube steady state operation as accurately as the available heat transfer correlations will allow.

The most important recommendations were that a better mathematical method for performing supporting calculations for the model be developed, and that the model's physical formulation be improved.

## 2. INTRODUCTION

The high melting point of the fluoride salt to be used as a heat transfer medium in a Molten Salt Reactor and the high operating temperature of radioisotope heat sources pose complex problems in designing a conventional once-through boiler. Startup of such a boiler is difficult because of the high temperature gradient between the molten salt and boiling water. This can cause thermal shock and flow instabilities the effects of which may range from annoyance to boiler damage.

To reduce these difficulties, a new concept in boiler tube design was proposed (3) in which the boiling water is surrounded by a buffer layer of superheated steam. Figure 1 shows a single tube of this reentry tube boiler. The water enters at the bottom through a central inner tube. Preheating, boiling, and some superheating occur as the water flows upward through the tube. The steam emerges from the top of the inner tube, reverses direction and flows downward in the annular space between the inner and outer tubes. The molten salt would enter at the bottom, and flow upward around the outer tube and out the top.

A small boiler tube was constructed and tested (11). Pressure and flow instabilities were found to be unimportant, and moderately superheated steam was produced under particular operating conditions. These results indicated that a large-scale boiler tube of the reentry tube type would work as anticipated.

As operating pressure is increased, the heat of vaporization of water decreases so that more superheat would be given the steam for a fixed heat input to the boiler tube. For this reason, it is expected that elevated pressure operation would yield the desired boiler performance. This must be verified, however.

The objective of this work was to develop a mathematical model to be used in a digital simulation, and to verify the simulation by reproducing experimental results. A program of this type could be used to predict high pressure operation and to optimize boiler design.

## 3. MATHEMATICAL PROCEDURE

The heat transfer problem was approached by a finite difference method. The tube was divided in elementary lengths on which heat transfer calculations were performed. The calculation was begun at the bottom of the boiler tube. The elementary length needed to be small enough so that the physical properties of the fluids and the heat transfer coefficients would not vary significantly along an element. Fluid properties and heat tranfer coefficients were evaluated at the wall and fluid temperature extrapolated from the two preceding elements in a one difference method (7).

Only steady state was simulated. No pressure drop along the tube has been taken into account. Experimental data taken at pressures as high as 200 psia indicated a total pressure drop along the tube less than 10 psia. At higher pressures, pressure drop should be accounted for in the calculation.

The nomenclature used in this report are those shown in Fig. 2 and Appendices 10.7, 10.8, and 10.9. For an elementary tube length, a total quantity of heat QS is added to the system. This heat is conducted through the external wall,

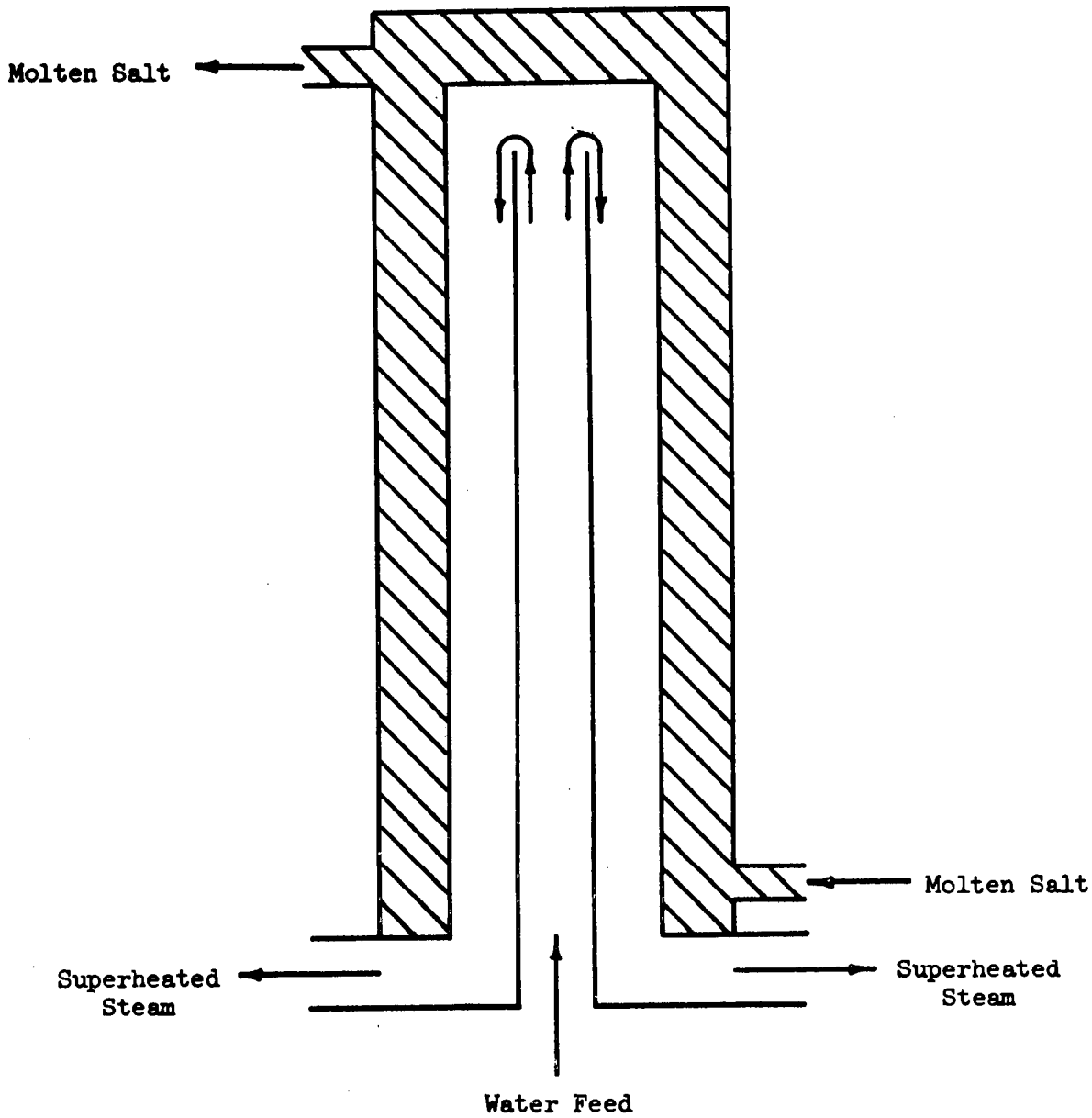


MASSACHUSETTS INSTITUTE OF TECHNOLOGY
SCHOOL OF CHEMICAL ENGINEERING PRACTICE
AT
OAK RIDGE NATIONAL LABORATORY

Reentry Tube Boiler (11)

| DATE | DRAWN BY | FILE NO. | FIG. |
|---|---|---|---|
| 5-7-68 | SFK | CEPS-X-82 | 1 |

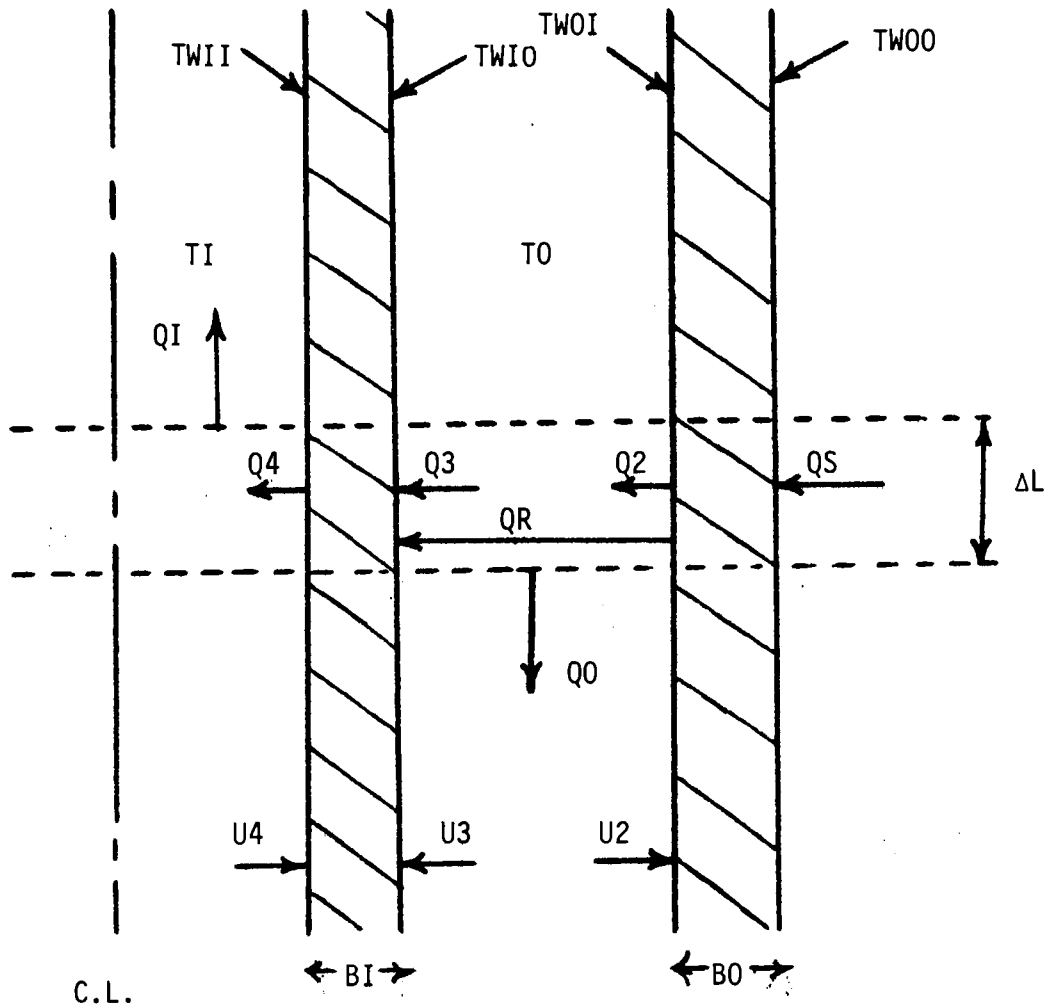


MASSACHUSETTS INSTITUTE OF TECHNOLOGY
SCHOOL OF CHEMICAL ENGINEERING PRACTICE
AT
OAK RIDGE NATIONAL LABORATORY

Notations for an Element

| DATE | DRAWN BY | FILE NO. | FIG. |
|---|---|---|---|
| 6-6-69 | YB | CEPS-X-86 | 2 |

$$QS = \frac{(KO)(AO)}{BO}(TWOO - TWOI) \tag{1}$$

At the inside surface of the outer wall, a part of QS is radiated to the inner wall. The remainder is convected to the steam. The heat radiated is given by (8)

$$QR = \frac{\sigma(A3)(TWOI^4 - TWIO^4)}{\frac{1}{\varepsilon_1} + \frac{A3}{A2}(\frac{1}{\varepsilon_o} - 1)} \tag{2}$$

where temperatures are in $^oR$.

The heat convected is

$$Q2 = U2(A2)(TWOI - TO) \tag{3}$$

Heat transfer from the steam to the inner wall (Q3) is by convection.

$$Q3 = U3(A3)(TO - TWIO) \tag{4}$$

The inner wall conducts Q3 + QR to the water inside the inner tube.

$$QR + Q3 = \frac{(KI)(AI)}{BI}(TWIO - TWII) \tag{5}$$

This heat flows across a water film resistance to the water in the inner tube.

$$Q4 = U4(A4)(TWII - TI) \tag{6}$$

The heat accepted by a lump of fluid inside the tube is,

$$QI = Q4 \tag{7}$$

This heat will be used to increase the temperature of the fluid (the increase is DELTI) or to increase the steam quality (X) in the boiling region. The heat accepted by the steam in the annulus,

$$QO = Q2 - Q3\,, \tag{8}$$

is used to heat up the steam (DELTO).

A system of equations can then be written eliminating Eqs. (7) and (8).

$$QS = QO + QI \tag{9}$$

$$QS = \frac{(KO)(AO)}{BO}(TWOO - TWOI)$$

$$QO = (U2)(A2)(TWOI - TO) - (U3)(A3)(TO - TWIO) \tag{10}$$

$$QI = \frac{(AI)(KI)}{BI}(TWIO - TWII) \tag{11}$$

$$QI = (U4)(A4)(TWII - TI) \tag{12}$$

$$QS - (U2)(A2)(TWOI - TO) = \frac{\sigma.(A3)}{\frac{1}{\varepsilon 1} + \frac{A3}{A2}(\frac{1}{\varepsilon_o} - 1)}(TWOI^4 - TWIO^4) \tag{13}$$

All the temperatures are in $^oR$. The heat fluxes QS, QO, QI and the temperatures TWII, TWIO, TWOI are unknown. The heat transfer coefficients are computed as explained in Sect. 4, and the values of TO and TI to be used in these equations are computed by extrapolation from the two preceding steps.

As boundary conditions, TWOO is given along the whole length of the tube. For starting conditions, TI and TO are known from experimental data; TWOO is known, TWIO is obtained by iteration over the first element. The temperature drop across the walls will be neglected for initialization conditions. The system of equations can be solved by substitution to give a fourth degree equation in TWIO (see Appendix 10.6). By back-substitution, TWOI, TWII, QO, QI, and QS are obtained. QO and QI are used to compute DELTI, DELTO, or DELX (change in the quality of the steam). The new values of TI and TO are then computed and used for the next step.

A more complete description of the program, the program listing, and the input information are given in Appendices 10.1, 10.2, and 10.3, respectively.

## 4. HEAT TRANSFER COEFFICIENTS

The determination of the temperature profile in the reentry tube boiler required local heat transfer coefficients. For an element of tube length the temperatures were independent of axial position so that the coefficients were functions only of the flow regime and physical state of the fluid. It

was further assumed that the water was completely vaporized before leaving the inner tube. (All coefficients are in units of Btu/hr-ft$^2$-$^o$F.)

### 4.1 Inside of Outer Tube

In laminar flow the Greatz equation {Ref. (12), p. 232} is used,

$$h = 1.75\left(\frac{k}{D_e}\right)\left(\frac{m\ C_p}{kL}\right)^{1/3}\left(\frac{\mu}{\mu_w}\right)^{0.14}$$

in which the fluid properties are evaluated at the mean film temperature, taken as the average of the wall and bulk temperature. When the Greatz number is less than twelve, the above form is modified {Ref. (12), p. 232} to read

$$h = \frac{2}{\pi}\left(\frac{k}{D_e}\right)\left(\frac{m\ C_p}{kL}\right)\left(\frac{\mu}{\mu_w}\right)^{0.14}$$

The annular equivalent diameter, $D_e$, is used in these formulae.

Transition regime coefficients are obtained from the Nusselt type equation

$$h = 0.116\left(\frac{k}{D_e}\right)\left[\left(\frac{D_eG}{\mu}\right)^{2/3} - 125\right]\left(\frac{C_p\mu}{k}\right)^{1/3}\left(\frac{\mu}{\mu_w}\right)^{0.14}\left[1 + \left(\frac{D_e}{L}\right)^{2/3}\right] \quad (14)$$

between Reynolds number of 2100 and 10,000, and the fluid properties are evaluated at the mean film temperature. The length, L, is the total length of the tube in which transition flow exists.

Turbulent heat transfer coefficients are obtained from the Dittus-Boelter relation (12),

$$h = 0.023\left(\frac{k}{D_e}\right)\left(\frac{D_eG}{\mu}\right)^{0.8}\left(\frac{C_p\mu}{k}\right)^{1/3}\left(\frac{\mu}{\mu_w}\right)^{0.14}$$

### 4.2 Outside of Inner Tube

This heat transfer coefficient is computed as above in the laminar and transition regimes, with the outside diameter of the inner tube used in place of the annular equivalent diameter.

Turbulent heat transfer coefficients are obtained from a modified Dittus-Boelter equation as recommended by Wiegand (10).

$$h = 0.023\left(\frac{k}{D_e}\right)\left(\frac{D_e G}{\mu}\right)^{0.8}\left(\frac{C_p \mu}{k}\right)^{0.4}\left(\frac{D_{out}}{D_{in}}\right)^{0.4}\left(\frac{\mu}{\mu_w}\right)^{0.14}$$

The fluid properties are to be evaluated at the bulk temperature of the steam.

When the wall temperature falls below the saturation temperature of the steam, film condensation will occur {Ref. (12), pp. 331-337}. The coefficient for this condition is

$$h = \left(\frac{\Delta T}{\Delta T'}\right) 1.13\left(\frac{k^3 \rho^2 g \lambda}{\mu L \Delta T}\right)^{0.25}$$

in which L is the length of tube on which condensation occurs, $\Delta T$ is the difference between the saturation and wall temperatures, and $\Delta T'$ is the difference between the steam and wall temperatures. The physical properties are to be evaluated at the film temperature. This relation will be valid only for laminar films. If the film happens to be turbulent, an alternate relation should be used.

## 4.3 Inside of Inner Tube

In the inner tube fluid may exist as a liquid, as steam, or as a mixture. For single phase flow the laminar, transition, and turbulent heat transfer relations presented above were used. No viscosity correction term was included for liquid water flow. Fluid properties were evaluated at the mean film temperature.

Three subdivisions of the boiling region were considered: subcooled boiling, nucleate boiling, and annular liquid-film boiling. The transition region between nucleate and annular liquid-film boiling was neglected.

Subcooled boiling occurred when the inner tube inside wall temperature reached saturation temperature. The following relation {Ref. (12), p. 393} applied:

$$h = (T_w - T_{sat})^3 \left[\frac{\exp(P/900)}{1.9}\right]^4$$

Nucleate boiling coefficients are expressed as the sum of a boiling and a convective term (1), each multiplied by a scaling factor. Up to a steam quality of about 0.95 the nucleate boiling equation is

$$h = 0.00122\left[\frac{k^{0.79} C_p^{0.45} \rho^{0.49} g_c^{0.25}}{\sigma^{0.5} \mu^{0.29} \lambda^{0.24} \rho_v^{0.24}}\right](t_{in} - t_{out})^{0.24}(\Delta P)^{0.75} S + h_{conv}\left(\frac{Re_{tp}}{Re_{liq}}\right)^{0.8}$$

in which the physical properties are those of the liquid and $\Delta P$ is the difference of the liquid vapor pressures at the wall and saturation temperatures. The parameter S accounts for the relative importance of the boiling term as the steam quality increases. S was determined experimentally (1) and is given in terms of the two phase Reynolds number by

$$S = 1.0 \qquad \text{for } Re_{tp} < 3000$$

$$S = 1.0 - \frac{0.16\ \ln(Re_{tp}/3000)}{\ln(17/3)} \qquad \text{for } 3000 < Re_{tp} < 17{,}000$$

$$S = 0.84 - \frac{0.72\ \ln(Re_{tp}/17{,}000)}{\ln(350/17)} \qquad \text{for } 17{,}000 < Re_{tp} < 350{,}000$$

$$S = 0.10 \qquad \text{for } Re_{tp} > 350{,}000$$

where $Re_{tp}$ is defined in Appendix 10.1.4.5.

The second term of the heat transfer coefficient expression contains the one phase liquid convection coefficient computed as outlined above.

Film coefficients in the stable liquid annular film boiling region are defined by the relation

$$h = 0.00136\left(\frac{k}{D}\right)\left(\frac{DG}{\mu}\right)^{0.853}\left(\frac{C_p\mu}{k}\right)^{1/3}\left(\frac{\rho_L}{\rho_v}\right)^{2/3}\left(\frac{X}{1 - X}\right)^{0.147} \qquad (15)$$

The physical properties are those of the liquid.

## 5. RESULTS

Thus far no complete predictions of reentry tube boiler steady state operating conditions have been obtained from the program. During program debugging, it was found that:

1. The logic of the program works properly.

2. The computed heat input (QS) profile to the boiler agrees with that measured experimentally over a 20 in. length beginning at the water inlet within about 5%. Beyond this point computed heat inputs were incorrect.

3. Inclusion of film type condensation on the outer surface of the inner tube is necessary for proper predictions with the model.

4. A mathematical instability is generated in the computation if the initial value of the outside surface temperature of the inner wall is not accurate. This condition may be rectified.

Minor successes up to this stage of work indicate that part of the physical model closely represents the boiler operation, and that computational difficulties can be eliminated.

## 6. DISCUSSION OF RESULTS

An attempt to match experimental data (Appendix 10.4) using our program yielded useful information even though error conditions terminated execution of the program. An encouraging observation made was that the computed net heat input to the lower third of the boiler tube was within 5% of the experimentally measured heat input. This implies that, in the bottom region of the boiler, the physical model was closely reproducing the operating characteristics of the boiler.

In the region near the bottom of the boiler tube (water inlet and steam outlet), the feedwater cools the inner tube wall below steam saturation temperature causing film condensation on the outside wall of the inner tube. This condensation occurs in a superheated environment where the bulk steam temperature remains above saturation. The liquid film is revaporized eventually so there is no net liquid present at the steam outlet. This condition is analogous to subcooled boiling in which there is no net vapor accumulation from the formation of steam bubbles.

It was necessary to take the effect of condensation into account in the program because heat transfer from the steam to the inner wall is greatly enhanced when condensation takes place.

A problem was encountered in the calculational procedure used to determine the tube wall temperatures in the first increment of the boiler tube. The procedure involved an iteration on wall temperature. We suspect that the divergence problem associated with this calculation can be eliminated by decreasing the size of the temperature increment used in the iteration.

Confirming the available experimental results (Appendix 10.4) was a very difficult problem because the flow conditions studied were in the transition region between turbulent and laminar flow. Turbulent flow heat transfer is better characterized than that in the transition region. Since

our program can predict these experimental results, no difficulty should be encountered in reproducing other boiler operating information.

## 7. CONCLUSIONS

Based on the preceding discussion, the following may be concluded:

1. The physical model is representative of actual reentry tube boiler operation.

2. A modified version of the program will predict the boiler tube performance characteristics to within the accuracy with which the heat transfer coefficients are known.

## 8. RECOMMENDATIONS

It is suggested that:

1. The iteration performed on the first increment of boiler length be done in double precision to decrease the possibility of mathematical instability caused by truncation errors.

2. A simple Euler method be used to extrapolate temperatures into the next element of boiler tube length, rather than the present method.

3. Pressure drop in the boiler be included in the model because its effect will be significant in high pressure simulation.

4. The tube wall emissivities be defined as functions of temperature to obtain greater accuracy in the radiative heat transfer expression.

5. A temperature-pressure dependent function, rather than a constant value be used for the liquid surface tension in the nucleate boiling coefficient.

6. The effect of radiative heat transfer to a liquid film be taken into account in the boiler segments in which steam condensation takes place.

7. Minor changes in the sequence of computations be made to eliminate redundancy in the program.

## 9. ACKNOWLEDGEMENT

We wish to express our gratitude to A.P. Fraas, R.E. Helms, and R.E. MacPherson for their assistance and encouragement throughout the project, and especially to J.M. Baker, who kept the experimental apparatus operable.

# 10. APPENDIX

## 10.1 *CREEP* - a Clever Routine Emulating the Essence of the Process

### 10.1.1 General Discussion

A detailed description of each program segment is presented below. Relevant equations are given where necessary.

The program may be partitioned into three categories: simulating routines, physical property subprograms, and service subprograms. Their contents are the following:

Simulating routines

| | |
|---|---|
| *CREEP* | simulates the boiler tube model |
| COEF | computes heat transfer coefficients |

Physical property subprograms

| | |
|---|---|
| RHOG | steam density |
| RHOL | saturated liquid density |
| VIS | steam viscosity |
| VISL | liquid viscosity |
| CP | steam heat capacity |
| CPL | liquid heat capacity |
| THC | steam thermal conductivity |
| TKL | liquid thermal conductivity |
| VP | liquid vapor pressure |

Service routines

| | |
|---|---|
| NSHLIZ | initializes quantities, computes experimental heat input to boiler |
| TWALL | computes boiler outside wall temperature |
| PRQY | finds root of fourth-power equation |
| XLGMN | logarithmic mean of two numbers |

| | |
|---|---|
| S | computes value of suppression function |
| PLIT | plots water, steam, inside and outside wall temperatures |
| QA | computes experimental heat input to boiler as function of position |

10.1.2 Simulating Routines

10.1.2.1 *CREEP*. - *CREEP* has three essential functions:

1. Apply numerically the mathematical procedure described in Sect. 3.

2. Select the applicable heat transfer modes and give this information to COEF to compute the corresponding heat transfer coefficients.

3. Find by iteration:

   a. The length of boiler tube in which pure convective heat transfer to the liquid water takes place, GLEN.

   b. The length of boiler tube in which condensation of superheated steam takes place, GLEN2.

   c. The initial temperature of the inner wall.

It is necessary to know the two tube lengths mentioned in 3a and 3b at the outset of the calculation so that all heat transfer coefficients can be evaluated. (Some heat transfer coefficients are in terms of the total length of tube in which a particular type of heat transfer exists.) Since these two lengths are not known at the outset of a calculation, an iteration must be performed to define them.

A complete flow chart of *CREEP* can be found in Fig. 3. After the characteristic data for the boiler has been read, the subroutine NSHLIZ is called to give all the initial values known or chosen to all the parameters used in the computation. The number of steps NN is then computed and a DO LOOP started over the whole length of the boiler; the functions TWALL and QH are called to give the experimental conditions at this stage. TWALL is directly used for the computation of the heat transfer. QA will be used for comparison with the computed value. COEF is called to calculate heat transfer coefficients. PRQY is called to solve the fourth degree equation in TWIO. Two of the iterations on TWIO and GLEN2 are performed at this point and then QO and QI are computed. DELTO is calculated from a heat balance.

For the inner tube a parameter SUPSIG has the value 1, 0, 2, or 3 depending on whether the heat transfer inside the tube is by convection to liquid, subcooled boiling, boiling, or convection to the steam. The iteration on GLEN is performed at this stage, and the new conditions of

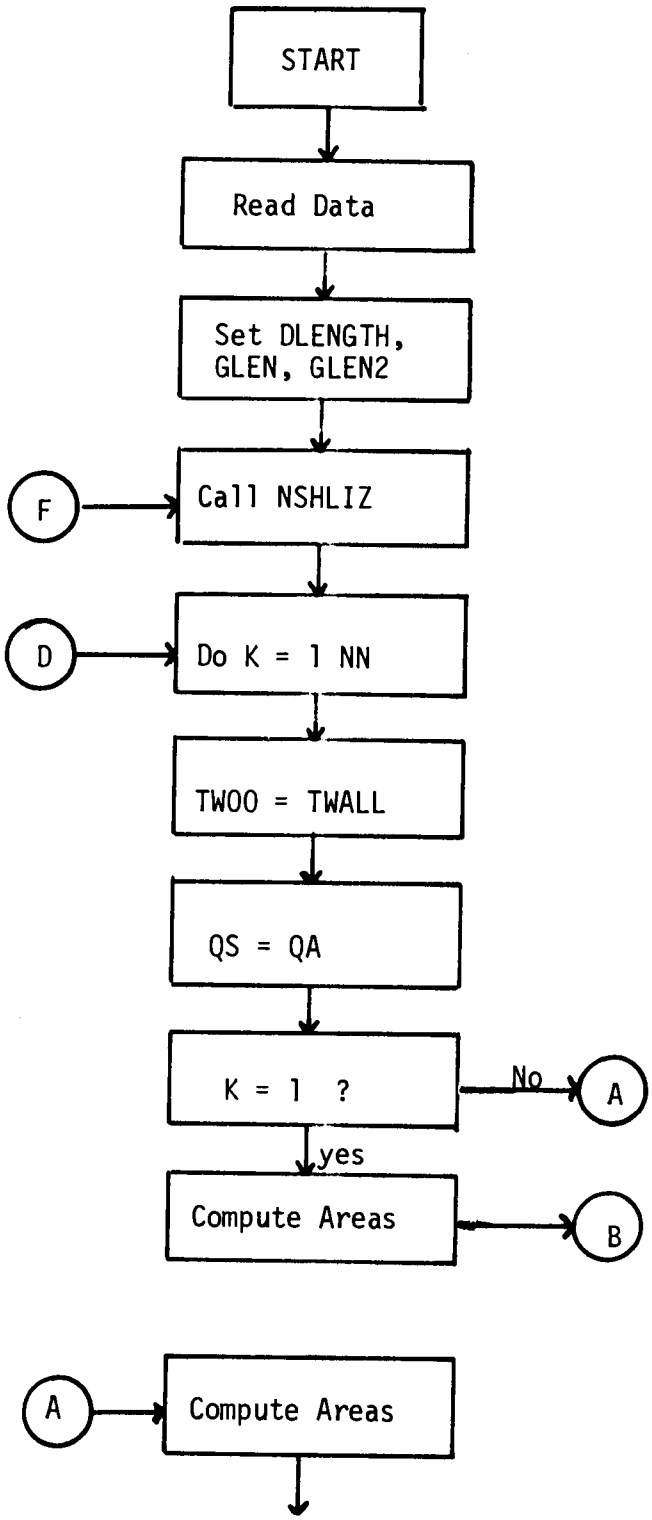


MASSACHUSETTS INSTITUTE OF TECHNOLOGY
SCHOOL OF CHEMICAL ENGINEERING PRACTICE
AT
OAK RIDGE NATIONAL LABORATORY

*CREEP* Flow Chart
(Page 1)

| DATE | DRAWN BY | FILE NO. | FIG. |
|---|---|---|---|
| 6-3-69 | YB | CEPS-X-86 | 3 |

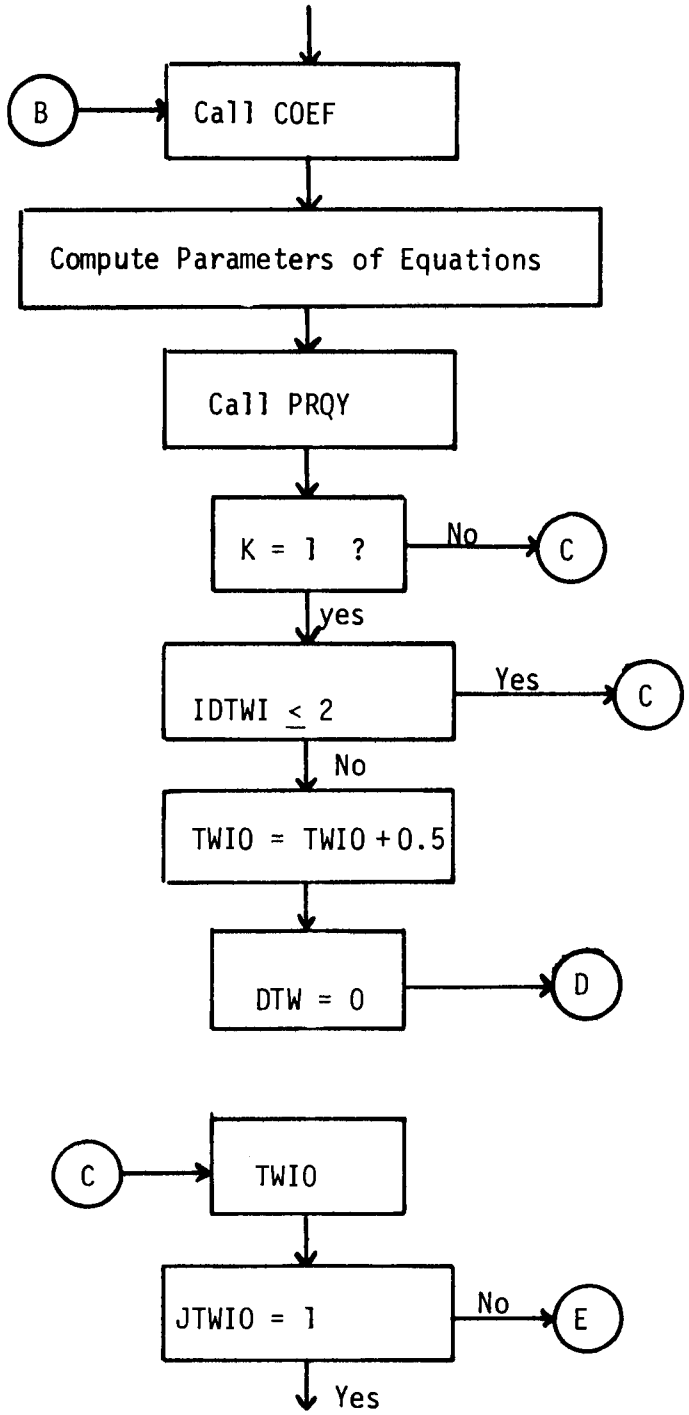


MASSACHUSETTS INSTITUTE OF TECHNOLOGY
SCHOOL OF CHEMICAL ENGINEERING PRACTICE
AT
OAK RIDGE NATIONAL LABORATORY

*CREEP* Flow Chart
(Page 2)

| DATE | DRAWN BY | FILE NO. | FIG. |
|---|---|---|---|
| 6-3-69 | YB | CEPS-X-86 | 3 |

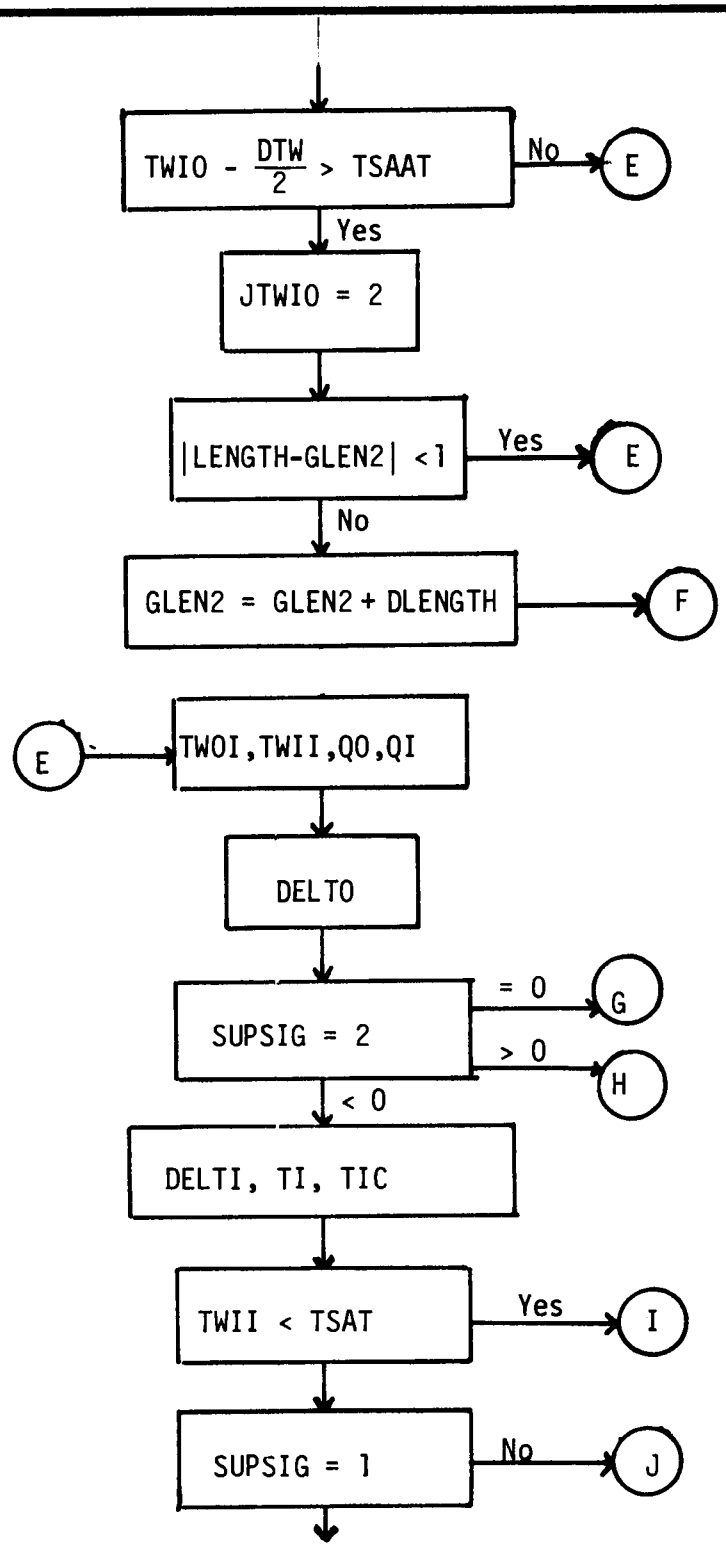


MASSACHUSETTS INSTITUTE OF TECHNOLOGY
SCHOOL OF CHEMICAL ENGINEERING PRACTICE
AT
OAK RIDGE NATIONAL LABORATORY

*CREEP* Flow Chart
(Page 3)

| DATE | DRAWN BY | FILE NO. | FIG. |
|---|---|---|---|
| 6-3-69 | YB | CEPS-X-86 | 3 |

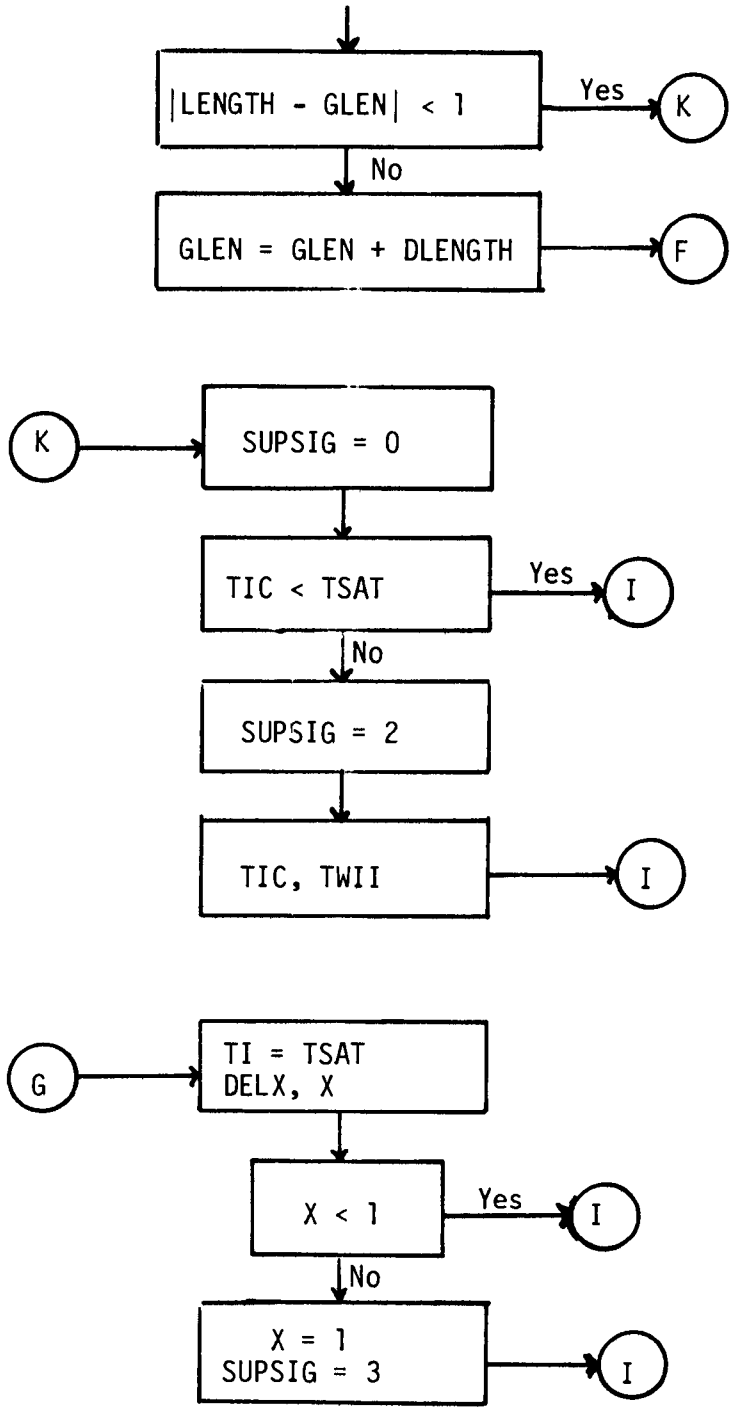


MASSACHUSETTS INSTITUTE OF TECHNOLOGY
SCHOOL OF CHEMICAL ENGINEERING PRACTICE
AT
OAK RIDGE NATIONAL LABORATORY

*CREEP* Flow Chart
(Page 4)

| DATE | DRAWN BY | FILE NO. | FIG. |
|---|---|---|---|
| 6-3-69 | YB | CEPS-X-86 | 3 |

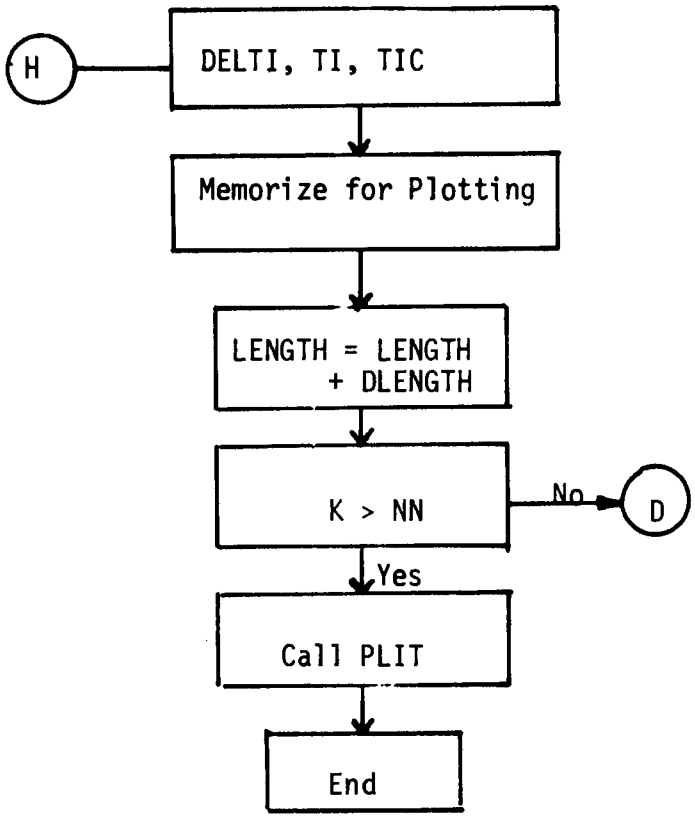


MASSACHUSETTS INSTITUTE OF TECHNOLOGY
SCHOOL OF CHEMICAL ENGINEERING PRACTICE
AT
OAK RIDGE NATIONAL LABORATORY

*CREEP* Flow Chart
(Page 5)

| DATE | DRAWN BY | FILE NO. | FIG. |
|---|---|---|---|
| 6-3-69 | YB | CEPS-X-86 | 3 |

the fluid inside the inner tube computed. The length is then increased by DLENGTH and the DO LOOP recycled. Figure 4 is a flow chart of the iteration procedure. The iteration is done on three parameters: (1) GLEN, the length of convection to liquid water, (2) GLEN2, the length of superheated steam condensation, and (3) TWIO, the initial temperature of the outside of the inner wall. Variations in GLEN and GLEN2 have small influence (1/3 or 1/4 power) compared to variations in TWIO, which can potentially bring instabilities into the computation. Therefore the convergence criterion is more strict for TWIO.

GLEN and GLEN2 are initialized as DLENGTH, and TWIO is initialized as TI taking a first length element very small to get the starting value of TWIO. Iteration is done until the computed value of TWIO falls close to the guessed value.

At each incremental step of length, whether or not condensation is taking place in the outer tube is checked. Condensation must stop before subcooled boiling can begin in the inner tube. If the computed tube length for condensation does not fall within a given interval around the set length, iteration is done on it. The same procedure is applied to GLEN.

10.1.2.2 Subroutine COEF (FLOW, SUPSIG, LENGTH, TI, P, TWII, TWIO, TWOI, TO, U2, U3, U4, GLEN, TSAT, X, GLEN2, HVAP). - Subroutine COEF computes the three film coefficients in the boiler tube. There are five conditions possible within the inner tube, i.e., convective liquid heating, subcooled boiling, nucleate boiling, liquid annular film boiling, and steam convective heating. The applicable condition is determined by checking SUPSIG and the steam quality. In the single phase regions the Reynolds number is computed and the proper heat transfer relation is used.

Heat transfer coefficients in the boiler annulus are categorized by Reynolds number as above. If the outside wall temperature of the inner tube is less than or equal to the steam saturation temperature, film condensation of the steam will occur. This condition is detected and accounted for.

Input to the subroutine through the parameter list is as shown in the title for this section. The definition and explanation of each symbol is found in Appendix 10.8. Output from the subroutine is the three heat transfer coefficients in units of Btu/hr-ft$^2$-$^o$F. Diameters of the two tubes are available from *CREEP* through common block /THREE/.

### 10.1.3 Physical Property Subprograms

10.1.3.1 Function RHOG(T,P). - Vapor density is obtainable from an expression for the specific volume of steam which correlates data to 3000 psia and 650$^o$F. Using temperature, T, as $^o$K and pressure, P, as atm, the specific volume in cm$^3$/g is:

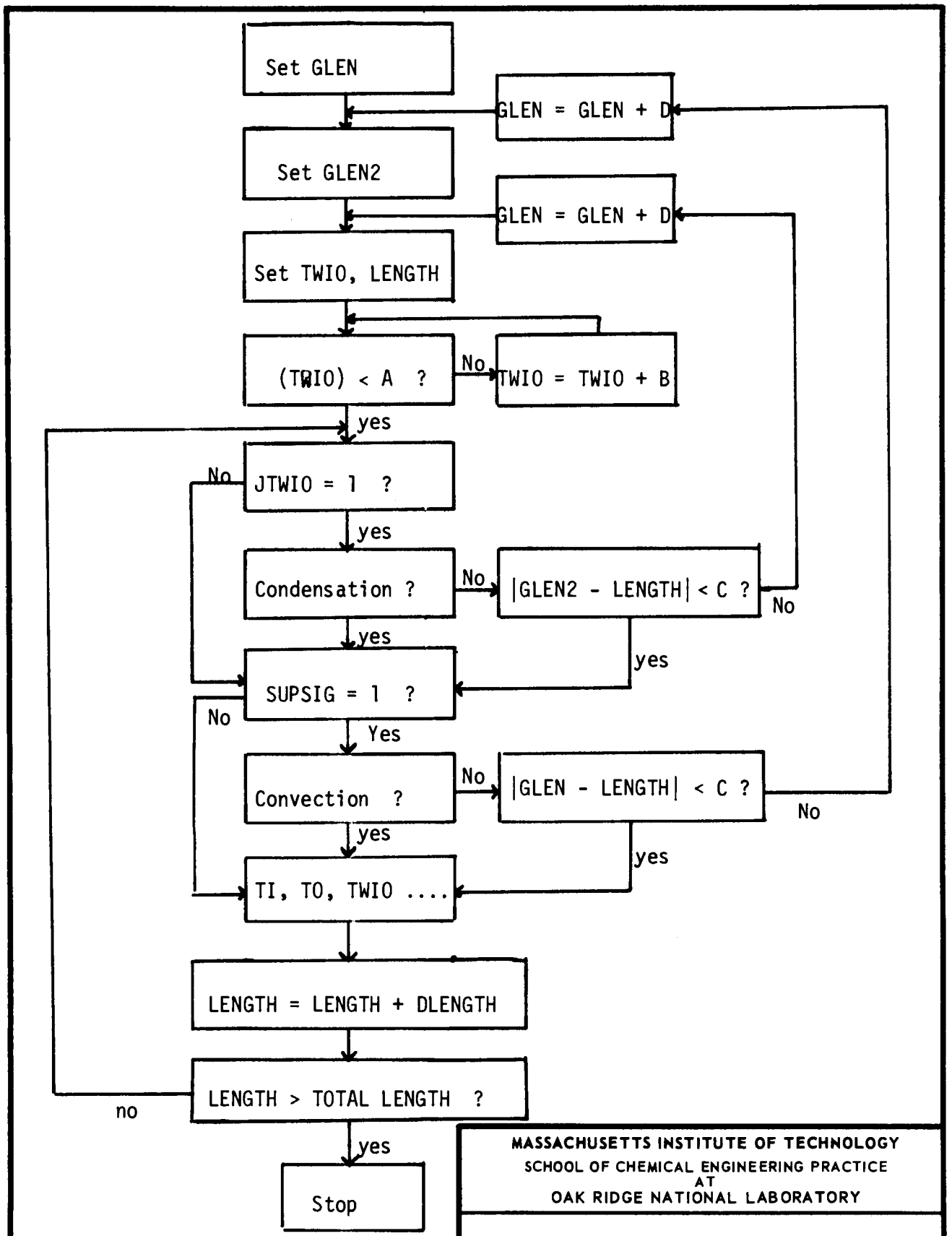


MASSACHUSETTS INSTITUTE OF TECHNOLOGY
SCHOOL OF CHEMICAL ENGINEERING PRACTICE
AT
OAK RIDGE NATIONAL LABORATORY

Iterations Procedures

| DATE | DRAWN BY | FILE NO. | FIG. |
|---|---|---|---|
| 6-3-69 | YB | CEPS-X-86 | 4 |

$$V = \frac{4.55504\ T}{P} + B$$

$$B = B_o + B_o^2\ g_1\ P/T + B_o^4\ g_2\ P^3/T^3 - B_o^{13}\ g_3\ P^{12}/T^{12}$$

$$B_o = 1.89 - 2641.62\ (10^{80870/T^2})/T$$

$$g_1 = 82.546/T - 1.6246 \times 10^5/T^2$$

$$g_2 = 0.21828 - 1.2697 \times 10^5/T^2$$

$$g_3 = 3.635 \times 10^{-4} - 6.768 \times 10^{64}/T^{24} \quad (\underline{9})$$

The steam density is therefore

$$\rho_G = \frac{28317}{454\ V}\ \mathrm{lb/ft^3}$$

Pressure input to RHOG is in psia and temperature is in $^oF$.

10.1.3.2 Function RHOL(T,P). - Density of saturated water as a function of temperature is obtained from an expression for its specific volume.

$$V = \frac{V_c + a(T_c - T)^{1/3} + b(T_c - T) + c(T_c - T)^4}{1 + d(T_c - T)^{1/3} + e(T_c - T)} \quad (\underline{9})$$

with T in $^oC$ to yield specific volume in $cm^3/g$. The constants of the equations are

$V_c$ = 3.1975 $cm^3/g$

$T_c$ = critical temperature, 374.11$^oC$

a = -0.3131548

b = $-1.203374 \times 10^{-3}$

c = $7.48908 \times 10^{-13}$

d = 0.1342489

e = $-3.946263 \times 10^{-3}$

Maximum usable temperature in this formula is 680°F. Conversion of the specific volume to density in English units gives:

$$\rho_L = \frac{28317}{454\ V}\ \text{lb/ft}^3$$

Temperature input to RHOL is in °F. Although the equation is valid for liquid at saturation pressure only, the operating pressure is included in the parameter list for consistency with other physical property subprogram.

10.1.3.3 Function VIS(T,P). - Steam viscosity was obtained as a function of temperature and pressure by use of the equation

$$\eta_o = \frac{2.3936 \times 10^{-8}\ T^{1/2}}{1 + 1039.63/T} + 1.4 \times 10^{-10}\ P$$

$$+ 1.9 \times 10^{-9}\{\exp(2.095 \times 10^{18}\ P^2/T^8) - 1\} \quad (9)$$

where temperature is in °K and pressure is in kg/cm$^2$. It should be noted that the recommended form presented in the reference is wrong. The correct equation is that shown above. Conversion of $\eta_o$ from g-sec/cm$^2$ to lb/ft-hr is

$$\eta = \frac{(9.29 \times 10^2)(3600)(32.2)}{454}\ \eta_o$$

This formula is valid for pressures to 3500 psia and temperatures to 1200°F.

Pressure input to VIS is in psia and temperature is in °F. The viscosity will be in lb/ft-hr.

10.1.3.4 Function VISL(T,P). - Liquid water viscosity is affected by change in temperature, but is practically independent of pressure (6). The viscosity at 3000 psia and 300°F is only 5.3% greater than that of the saturated liquid at this temperature. Variation at other temperatures are of similar magnitude.

Mathematical representation of liquid viscosity was accomplished by fitting a curve to data available at 2000 psia (2) to yield the relation

$$\mu = 311.1\ T^{-1.14129}$$

Viscosity will be in lb/ft-hr when temperature is in °F. This equation is valid to 620°F.

Pressure is included as input to the function only to maintain consistency with the input parameters of the other physical property subprograms.

10.1.3.5 Function CP(T,P). The heat capacity of steam was described by curves fitted to available data (5, 9) up to 2000 psia and 1000°F.

For pressures up to 200 psia the data were represented by series of straight line segments defining the heat capacity as a function of temperature at 200, 120, 60, and 30 psia. Steam heat capacity is not a strong function of pressure in this region, and these four curves were sufficient to approximate the data for all pressures.

When the data at a particular pressure merged with the data for heat capacity at zero pressure, the following form was used

$$C_{p_o} = 1.4720 + 7.5566 \times 10^{-4}\, T + 47.8365/T \qquad (9)$$

with temperature in °K and $C_{p_o}$ in joules/g-°C. Conversion to the units of Btu/lb-°F was done by the relation

$$C_p = \frac{(9.47799)(454)}{1800}\, C_{p_o}$$

Above 200 psia the parametric representation of Ref. (9), p. 80, was represented by linear functions of temperature at constant pressure dividing the graph in elementary pieces where this linear approximation was possible. Seven regions have been so chosen, defined by linear relations between temperature and pressure. In each one of these regions the general form $C_p = A(T - 600) + B$ was fitted with A and B functions of pressure varying with the region. As an example in region 4 (defined by $0.228\,P + 440 < T \leq 0.167\,P + 470$ and $P \leq 800$), A was graphically represented by $-\{0.0025 + (P - 400) \times 2.5 \times 10^{-6}\}$, and B by $0.4 + 0.000875(P - 400)$.

Input to the function is temperature in °F and pressure in psia. The heat capacity is returned in units of Btu/lb-°F.

10.1.3.6 Function CPL(T,P). - The function CPL gives the heat capacity of liquid water at a temperature T and a pressure P. The original data were taken from the steam tables (9), where the heat capacity of the liquid water is plotted as a function of the pressure with the temperature as a parameter. The curves at constant temperature were approximated by straight lines of the form A + BP for pressures less than 4000 psia. A is the value of CPL for a theoretical 0 pressure. It is a function of temperature obtained graphically by plotting CPL(T,0) as a function of T for temperatures ranging from 200°F to 640°F. The resulting form is $(660 - 0.9\,T)/(675 - T)$. B is the slope of a CPL vs pressure plot. It is a function of pressure graphically approximated by

$$\frac{-10^{\left(-T + \frac{11000}{459.69} + 9.90\right)}}{4000} \simeq B$$

The resulting expression of CPL is then

$$CPL(T,P) = \left(\frac{-0.9\ T - 660}{T - 675}\right) - 10^{-\frac{11000}{T + 459.69} + 9.90}\ \frac{P}{4000}$$

Input is temperature in $^{o}F$ and pressure in psia. The liquid heat capacity will be in units of Btu/lb-$^{o}F$.

10.1.3.7 Function THC(T,P). - Thermal conductivities of steam are correlated by the equation

$$k_o = 3.191 \times 10^{-6}\ T^{1/2}\{\exp(1.5234 \times 10^{-9}\ T^3)\}$$

$$+ 2.486 \times 10^{-5}\ \{\exp(1.773 \times 10^9\ P/T^4) - 1\} \qquad (9)$$

Temperature and pressure are $^{o}K$ and kg/cm$^2$, respectively. The resulting thermal conductivity will be in the units of cal/cm-sec-$^{o}C$, and conversion to Btu/ft-hr-$^{o}F$ is

$$k = \frac{(30.48)(3600)}{(252)(1.8)}\ k_o$$

This relation is valid to 2000 psia and 1000$^{o}F$.

Pressure input to THC is in psia and temperature in $^{o}F$. The thermal conductivity will be in units of Btu/hr-ft-$^{o}F$.

10.1.3.8 Function TKL(T,P). - The function TKL(T,P) gives the thermal conductivity of saturated liquid water (T and P being related by the saturation relation). The original data (9) were interpolated linearly between the different points in the range of 100 to 600$^{o}F$ and extrapolated linearly above 600$^{o}F$ in order to provide data to as high as a 2000 psia saturation pressure (corresponding to a saturation temperature of 640$^{o}F$).

Input to this function is temperature in $^{o}F$ of the saturated liquid. The thermal conductivity is not a function of pressure, but is included for consistency with other physical property subprograms. Liquid thermal conductivity will be computed as Btu/hr-ft-$^{o}F$.

10.1.3.9 Function VP(T,P). - Liquid water vapor pressure as a function of temperature up to the critical point is obtained from the equation

$$\log_{10} \frac{P_c}{P_L} = \frac{T_c - T}{T} \left(\frac{a + bx + cx^3 + ex^4}{1 + dx}\right) \qquad (9)$$

in which

$P_L$ = vapor pressure, atm

$T$ = temperature, $^oK$

$T_c$ = critical temperature, $647.27^oK$

$P_c$ = critical pressure, 218.167 atm

and

$a = 3.346313$

$b = 4.14113 \times 10^{-2}$

$c = 7.515484 \times 10^{-9}$

$d = 1.3794481 \times 10^{-2}$

$e = 6.56444 \times 10^{-11}$

Conversion of the vapor pressure, $P_L$, to English units is

$$P = (14.696)(144)\ P_L \quad lb/ft^2$$

Data input to VP is the water temperature in $^oF$. The above relation is not a function of pressure, but the parameter list includes it to remain consistent with the other physical property subprograms. A dummy value should be used.

10.1.4 Service Routines

10.1.4.1 Subroutine NSHLIZ (TWAT, TSTEAM, TO, TI, LENGTH, DLENGTH, SUPSIG, N, ISKIP, B, JTWIO, SIGM, X, TWOI2, TWIO, TWII, TWII2, TWOII, TWII1, EPSIN, EPSOUT. - The simulation is performed by calculating through the boiler, one length increment at a time, and it is necessary to use quantities computed in the previous increment for the current calculation. To begin the simulation, therefore, initial values must be specified. Input data to NSHLIZ, via the parameter list, are boiler feed water and exit steam

temperature, which are read as input data to *CREEP*. The initial values specified for the first length increment are

Temperatures

| | |
|---|---|
| TI | feed water temperature |
| TO | exit steam temperature |
| TWOI2 | outside wall of outer tube temperature |
| TWIO | feed water temperature |
| TWII | feed water temperature |
| TWII2 | feed water temperature |
| TWOI1 | outside wall of outer tube temperature |
| TWII1 | feed water temperature |

Indices and constants

| | |
|---|---|
| JTWIO | = 1 |
| SUPSIG | = 1 |
| DLENTH | increment of length, in. |
| EPSIN | emissivity of inner tube, outer wall |
| EPSOUT | emissivity of outer tube, inner wall |
| SIGM | $0.1713 \times 10^{-8}$ Btu/hr-ft$^2$-$^oR^4$ |
| LENGTH | DLENTH |

Feedwater condition

X = 0

Refer to Appendix 10.8 for definition and explanation of the symbols used above.

The second function performed by NSHLIZ is to compute the net heat input to the boiler at the locations along the tube where the appropriate measurements are made. The resulting net heat input and length coordinates are located in common block /ONE/ for use by QA.

Heat generated by the heaters on the apparatus may be obtained from their respective power inputs. Each heater section consists of two

semicircular sections enclosing a 12-in.-long segment of the boiler tube with a 1-in. gap between sections. For the experimental arrangement in which each pair of heaters was wired in series and powered by 230 VAC the heat produced by one section is

$$Q_{input} = \frac{3600}{1054.6}(115)\ EI\ \text{Btu/hr}$$

where E represents the dial setting of the controlling autotransformer as a fraction of full scale. To avoid mathematical discontinuities in the heat input function, each heater's output was averaged over 13 in. to include the 1-in. gap between sections. Each section is composed of two halves, and the heat production becomes

$$Q_{input} = 2\left(\frac{12}{13}\right)\left(\frac{3600}{1054.6}\right)(115)\ EI\ \ \text{Btu/hr}$$

For use in the simulation it was necessary to know the heat input per inch of the boiler tube. Heater production is then

$$Q_{input} = 2\left(\frac{12}{13}\right)\left(\frac{1}{13}\right)\left(\frac{3600}{1054.6}\right)(115)\ EI\ \text{Btu/hr per inch of boiler}$$

Different experimental wiring methods introduce their corresponding changes in the electrical power expression.

Heat lost to the surroundings is obtained by considering conduction through the insulation surrounding the heaters (11). Temperatures were measured at six points on the inside surface of the insulation and at two points on the outside surface. Linear variation between the inside measurements was assumed and interpolation performed when required. Outside surface temperatures measured approximately 1 ft from each end did not vary more than a few degrees and their arithmetic mean was used as constant along the entire outer insulation surface. Heat lost over a length of 1 in. will be

$$Q_{loss} = \frac{\Delta T\ k\ A}{X}$$

$$= \frac{(T_{inside} - T_{outside})k\{\pi(1)\ \text{logmean}(D_{inside}, D_{outside})/144\}}{(2/12)}$$

$$= \frac{(T_{inside} - T_{outside})(0.0533)\ \text{atan}(1)\ \text{logmean}\ (3.3, 7.3)}{6}$$

Btu/hr/in. of boiler

Temperatures are in $^{o}F$ and linear distances are in inches. The inside insulation temperature was averaged over the 1-in. length for which the computation was performed.

Finally, the net heat input to the boiler is

$$Q_{net} = Q_{input} - Q_{loss} \quad \text{Btu/hr/in. of boiler}$$

This computation was made at the locations of the ends of the heaters and the inside insulation surface thermocouples, whose placement is shown on Fig. 5.

Required electrical and insulation temperature data are read by NSHLIZ from unit records. When simulating other than experimental conditions for which heat input data are nonexistent, the net heat input mechanism may be disabled by specifying the variable ISKIP equal to 2. The mechanism is enabled when ISKIP equals 1. This assignment is made in *CREEP*.

10.1.4.2 Function TWALL (XL). - The temperature of the outer wall of the outside tube of the reentry boiler was experimentally measured by thermocouples located at eleven positions. The apparatus is now set up so that these temperatures are recorded from the bottom of the tube (water inlet and steam outlet) to the top by points two to twelve on the temperature recorder. Figure 5 shows their placement.

A linear temperature variation is assumed between the measured points. There is no wall thermocouple at the bottom of the boiler, so the temperature recorded at point two is extrapolated.

The purpose of TWALL is to interpolate between the measured temperatures. The length coordinates are established within TWALL and the temperature coordinates are read as input data by *CREEP* and transferred to TWALL via common block /TWO/.

The input parameter used when calling TWALL is a position along the boiler tube in inches measured from the water inlet-steam outlet, and the output will be the outside wall temperature of the outside tube in $^{o}F$ at that position.

10.1.4.3 Subroutine PRQY (C, TI, TO, POLYN, ROOT, IERROR). - The subroutine PRQY was written to solve the fourth degree equation resulting from the mathematical treatment of the problem. The root of interest in this equation is TWIO which physically represents the outside temperature of the inner wall. Because physically this temperature must be higher than the temperature of the fluid inside the inner tube, the search for the root is limited by a minimum of TI (absolute temperature). For the same reason the root has an upper bound of TO. The technique is then to divide this

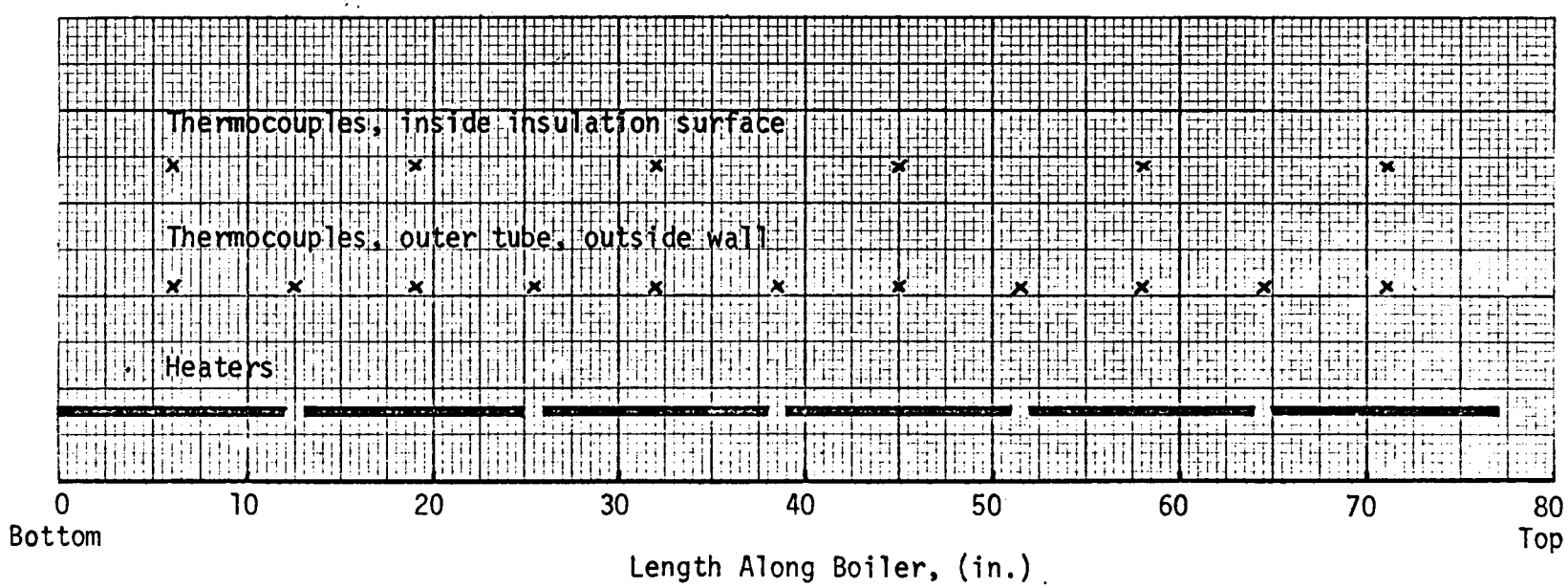


MASSACHUSETTS INSTITUTE OF TECHNOLOGY
SCHOOL OF CHEMICAL ENGINEERING PRACTICE
AT
OAK RIDGE NATIONAL LABORATORY

HEATER AND THERMOCOUPLE LOCATIONS

| DATE | DRAWN BY | FILE NO. | FIG. |
|---|---|---|---|
| 6-3-69 | SK | CEPS-X-86 | 5 |

interval (TI, TO) into ten equal parts, locate the part containing the root, divide this interval into ten smaller intervals, and continue the procedure. This iteration is done six times to yield a minimum accuracy in the calculated root of the order of $10^{-3}$ °R which, considering other approximations, can be considered as an exact value. The inputs to the subroutine are the five coefficients C of the fourth degree equation and the temperatures TI and TO in °F.

The outputs are the root, ROOT, which will be in °R, the value of the fourth degree polynomial, POLYN, for the root and an error message, IERROR, being 0 in usual cases and 1 when no root can be located in the initial interval.

10.1.4.4 Function XLGMN (A, B). - The logarithmic mean of A and B is defined as

$$M = \frac{A - B}{\ln \frac{A}{B}}$$

Input to XLGMN consists of two positive, real numbers. A may be larger, equal, or smaller than B.

10.1.4.5 Function S(RE). - The "suppression function" used in computation of the nucleate boiling heat transfer coefficient was determined experimentally for vertical, two-phase convective flow of water as a function of the two phase Reynolds number (1). It lies between zero and one, is unitless, and is represented by the expressions:

$$S = 1 \qquad \text{for } Re_{tp} < 3000$$

$$S = 1 - \frac{0.16 \ln (Re/3000)}{\ln (17/3)} \qquad \text{for } 3000 < Re_{tp} < 17{,}000$$

$$S = 0.84 - \frac{0.72 \ln (Re/17{,}000)}{\ln (350/17)} \qquad \text{for } 17{,}000 < Re_{tp} < 350{,}000$$

$$S = 0.10 \qquad \text{for } Re_{tp} > 350{,}000$$

The two-phase Reynolds number is of the usual form, using liquid density and viscosity, and an "effective" velocity of the boiling water. This is defined as

$$V_{TP} = (1 - X)\, V_W + XV_S$$

where $V_W$ and $V_S$ are the single phase velocities of the water and steam, respectively, and X the steam quality. The two-phase Reynolds number becomes

$$Re_{tp} = \frac{D\ V_{TP}\ \rho_L}{\mu_L}$$

This value is the input to S.

10.1.4.6 Subroutine PLIT (NO, B, N, M, NL, NS, KX, JX). For convenience in evaluating the computed results, the temperatures of the water in the inner tube of the boiler, the steam in the annulus, the outside wall of the outside tube, and the outside wall of the inner tube were plotted along the length of the boiler.

The purpose of PLIT is to prepare this chart by scaling the data to be plotted to the discrete physical characteristics of the line printer. Input parameters are:

| | |
|---|---|
| NO | chart number |
| B | matrix of data to be plotted |
| N | number of rows in matrix B |
| M | number of columns in matrix B |
| NL | number of lines in the plot |
| NS | a sorting code, equal to zero for this simulation |
| KX | first dimension of B matrix from dimension statement |
| JX | second dimension of B matrix from dimension statement |

This program from the IBM 360 Scientific Subroutine Package has been modified and corrected by the M.I.T. Research Laboratory of Electronics computation group and made concordant with the CDC 1604 monitor for use at ORNL.

10.1.4.7 Function QA(XL). - Subroutine NSHLIZ computes the net heat input to the experimental boiler at twelve positions along the tube and transmits these coordinate pairs to QA via common block /ONE/. Length along the boiler is measured in inches from zero at the tube bottom (water inlet-steam outlet).

Linear variation is assumed between the points, and the purpose of QA is to interpolate between the coordinates supplied to it.

Input to QA is a position on the tube measured in inches from the water inlet, and output will be net heat input to the boiler in Btu/hr/in. of tube length.

## 10.2 *CREEP* Listing

The following is a Fortran 63 listing of the program *CREEP*.

```
C
C                                   ***CREEP***
C
C          A CLEVER ROUTINE EMULATING THE ESSENCE OF THE PROCESS
C
C
C
      DIMENSION C(5)                                B(1000,   5),TC(12)
      TYPE REAL KI,KP,LENGTH,LENTH
      TYPE INTEGER SUPSIG
      COMMON /TWO/ TC  /THREE/ D1, D2, D3, D4, AIN, AOUT
C
C     READ  BOILER PROPERTIES
C
      READ (50, 102) D1, D2, D3, D4, KI, KO
      AIN = ATANF(1.)*D4*D4/144.
      AOUT = ATANF(1.)*(D2*D2 - D3*D3)/144.
C
C     READ FLUIDS PROPERTIES
C
      READ (50, 100) FLOW, TSTEAM, P, TWAT, TSAT, LENTH, HVAP
      READ (50, 101) (TC(I), I = 2, 12)
      TC(1) = TC(2)
      WRITE (51, 1021) FLOW, TSTEAM, P, TWAT, TSAT, LENTH, HVAP
      WRITE (51, 1022) (TC(I), I = 1, 12)
      ISKIP = 1
      FLOW = 60.*FLOW/454.
      RO=(D1-D2)/24.
      RI=(D3-D4)/24.
C
C     CHOOSES DLENTH  FOR THE WHOLE FINITE DIFFERENCE CALCULATIONS
C
      DLENTH = .2
      DLEN=DLENTH
      DLEN2=DLENTH
   24 CALL NSHLIZ (TWAT, TSTEAM, TO, TI, LENGTH, DLENTH, SUPSIG, N, ISKI
     1P, B, JTWIO  ,  SIGM, X, TWOI2, TWIO, TWII, TWII2, TWOII, TWIII,
     2EPSIN, EPSOUT)
       WRITE(51,500)
  500 FORMAT(2X,//)
      TIC=TI
      TOC=TO
C
C     COMPUTES NUMBER OF STEPS
C
```

```
      NN = XFIXF(LENTH/DLENTH)    +1
   53 DTW=0.
C
C     BEGINS CALCULATION  PROCEDURES
C
      DO 1 K = 1, NN
      CIRC=3.14159/144.
      IF(K.EQ.1)  60,61
   60   CIRC=CIRC*LENGTH
        GO TO 62
   61 IF(K.GT.2)   63,64
   63 CIRC=CIRC*DLENTH
   62 A1=D1*CIRC
      A2=D2*CIRC
      A3=D3*CIRC
      A4=D4*CIRC
      A0=XLGMN(A1,A2)
      A1=XLGMN(A3,A4)
      Y6=SIGM*A3/(1./EPSIN+D3*(1./EPSOUT-1.)/D2)
   64 TWC01=TWALL(LENGTH)
      QS=QA(LENGTH)
      QS=QS*DLENTH
      CALL CORE (FLOW,SUPSIG, LENTH,TIC,P,      TWII            ,TWI0-DTW/2
     1.,(3.*TWOI2-TWOII)/2.,TOC,U2,U3,U4,GLEN,TSAT, X,GLEN2,HVAP)
      TWC0=TWOI1
      Y1=U4*A4/(U4*A4+KI*AI/BI)
      Y2=KI*AI/(BI*(U4*A4+KI*AI/BI))
      Y3=U2*A2+K0*A0/B0
      Y4=-(U3*A3+AI*KI*Y1/BI)/Y3
      Y5=((U2*A2+U3*A3)*(TOC+459.69)+K0*A0*(TW00+459.69)/B0+Y1*KI*AI*(TI
     1C+459.69)/BI)/Y3
      C(5)=(Y4**4-1.)*Y6
      C(4)=4.*Y6*Y5*(Y4      )**3
      C(3)=6.*Y6*(      Y4*Y5)**2
      C(2)=(4.*Y6*Y4*Y5**3-U3*A3-Y1*KI*AI/BI)
      C(1)=Y6*Y5**4+U3*A3*(TOC+459.69)+Y1*KI*AI*(TIC+459.69)/BI
      CALL PROY(C,TI,TO,POLYN,ROOT,IERROR)
      IF(IERROR.EQ.1) 33,15
   15 DTW=TWI0+459.69-ROOT
C
C     ITERATION ON TWIO STARTS
C
      IF(K.EQ.1) 50,51
C
C     TEST ON DTW FOR SMALL LENGTH ELEMENT
C
   50 IF(ABSF(DTW).LE. .7) 51,52
C
C     IF TEST NOW SATISFACTORY, TWIO IS INCREMENTED AND THE PROCESS D
C     DONE AGAIN
C
   52 TWI0=TWI0+0.2
      IF(TWI0.GT.TO) 33,53
C
C       TAKES AGAIN REGULAR CALCULATION PROCEDURE FOR K.GT.1
C
```

```
   51 TWIO=TWIO-DTW
C
C     CHECK ON CONDENSATION
C
      IF(JTWIO.EQ.1) 40,42
C
C       IF CONDENSATION IS GOING TO STOP NEXT STEP, THE CHOSEN LENGTH
C      GLEN2 IS CHECKED
C
   40 IF(TWIO-DTW/2..GT.TSAT) 41,42
   41 JTWIO=2
      IF(ABSF(LENGTH-GLEN2).LE.1.) 42,43
C
C       IF THE RESULT IS NOT SATISFACTORY,  GLEN2 IS INCREMENTED
C      AND THE PROCESS BEGUN AGAIN
C
   43 GLEN2=GLEN2+DLENTH
      GO TO 24
   42 TWII1=TWII2
      TWII2=Y4*(TWIO+459.69)+Y5-459.69
      IF(K.EQ.1)  70,71
   71 TWII1=TWII2
   70 TWII2=Y1*TIC+Y2*TWIO
      IF(K.EQ.1)  72,73
   72 TWII1=TWII2
   73 TWII=(3.*TWII2-TWII1)/2.
      QO=U2*A2*(TWII2-TOC)+U3*A3*(TWIO-TOC)
      QI=KI*AI/BI*(TWIO-TWII2)
      QSC=QO+QI
C
C      NEW CONDITIONS IN THE ANNULUS
C
      DELTO=QO/(CP(TOC,P)*FLOW)
      TO=TO-DELTO
      TOC=TO-DELTO/2.
C
C       TEST  FOR CONDITIONS OF THE INSIDE FLUID
C
      IF(SUPSIG-2)10,11,12
   10 DELTI=QI/(FLOW*CPL(TIC,P))
      TI=TI+DELTI
      TIC=TI+DELTI/2.
C
C      TEST FOR SUBCOOLED BOILING AT THE NEXT STEP
C
      IF(TWII2.LT.TSAT) 20,13
   13 IF(SUPSIG.EQ.1) 16,19
C
C      CHECK FOR RIGHT VALUE OF GLEN
C
   16 IF(ABSF(LENGTH-GLEN).LE.1.) 18,6
C       IF TEST NOT SATISFACTORY,  GLEN IS INCREMENTED AND THE WHOLE
C     PROCESS  RESTARTED WITH THIS NEW VALUE
C
    6 GLEN=  GLEN+DLENTH
      GO TO 24
```

```
   18 SUPSIG=0
C
C     TEST FOR BOILI NG AT NEXT STEP
C
   19 IF(TIC.LT.TSAT) 20,17
C
C      CONDITIONS SET IN CASE OF FUTURE BOILING
C
   17 SUPSIG=2
      TIC=TSAT
      TWII=TWII-(TIC-TSAT)
      GO TO 20
C
C      BOILING  CALCULATIONS
C
   11 TI=TSAT
      DELTI=0.
      DELX=QI/(FLOW*HVAP)
      X=X+DELX
C
C      TEST FOR END OF BOILING AT NEXT STEP
C
      IF(X.LT.1.)20,14
C
C     SETTING CONDITIONS FOR SUPERHEATING OF THE STEAM
C
   14 SUPSIG=3
      GLEN = LENTH - LENGTH
      X=1.
      GO TO 20
C
C      CALCULATIONS IN CASE OF SUPERHEATING
C
   12 DELTI=QI/(FLOW*CP(TIC,P))
      TI=DELTI+TI
      TIC=TI+DELTI/2.
   20 WRITE (51, 200) ROOT, U2, U3, U4, TWOO, TWIO, TO, TI, X, QSC, QS,
     1LENGTH
C
C      STORAGE OF RESULTS FOR FINAL PLOTTING
C
      N = N + 1
      B(N, 1) = LENGTH
      B(N, 2) = TI
      B(N, 3) = TO
      B(N, 4) = TWALL(LENGTH)
      B(N,5)=TWIO
    1 LENGTH=LENGTH+DLENTH
C
C      END OF THE DO LOOP
C
      NO = NO + 1
C
C       PLOTTING RESULTS
C
   22 CALL PLIT (NO, B, N, 5, N + 25, 0, 1000, 5)
```

```
   33 CALL EXIT
  100 FORMAT (2X, F4.1, 2X, F5.0, 3(2X, F4.0), 2X, F4.0, 1X, F6.1)
  101 FORMAT (11(2X, F5.0))
  102 FORMAT (4(2X, F5.3), 2(2X, F5.2))
 1021 FORMAT (10E12.3)
 1022 FORMAT (10E12.3)
  200 FORMAT (12E10.3)
      END CHRE2
```

```
      SUBROUTINE COEF (FLOW, SUPSIG,  LENTH, TI, P, TWII, TWIO, TWOI, TO
     1, L2, U3, U4, GLEN,TSAT, X,GLEN2,HVAP)
      TYPE REAL LENTH
      TYPE INTEGER SUPSIG
      COMMON /THREE/ D1, D2, D3, D4, AIN, AOUT
C
C     TESTS SUPSIG TO DETERMINE STATE OF WATER IN THE INNER TUBE
C           SUPSIG = 1 MEANS WATER
C           SUPSIG = 2 MEANS BOILING
C           SUPSIG = 3 MEANS STEAM
      IF (SUPSIG - 2) 1, 2, 3
C
C     WATER IN THE INNER TUBE
C
C
C
C     TESTS FOR SUBCOOLED BOILING
C
    1 IF (TWII .GT. TSAT) 27, 28
   27 U4 = ((TWII - TSAT)**3.)*((EXPF(P/900.)/1.9)**4.)
      GO TO 10
   28 RE = D4*FLOW/(12.*AIN*VISL(TI, P))
C
C     CHECKS THE REYNOLDS NUMBER FOR FLOW REGIME
C
      IF (RE .LE. 2100.) 4, 5
    5 IF (RE .GE. 10000.) 6, 7
C
C     LAMINAR FLOW
    4 GRZ = 12.*FLOW*CPL(TI,P)/(TKL(TI, P)*GLEN)
      IF (GRZ .LE. 12.) 8, 9
    8 U4 = 24.*TKL(TI, P)*GRZ/(D4*4.*ATANF(1.))
      GO TO 10
    9 U4 = 1.75*12.*TKL(TI, P)*CUBERTF(GRZ)/D4
      GO TO 10
C
C     TURBULENT FLOW
    6 U4 = .023*TKL(.5*(TI + TWII), P)*12.*(D4*FLOW/(12.*AIN*VISL(.5*(TI
     1+ TWII), P)))**(.8)*(CPL(.5*(TI + TWII), P)*VISL(.5*(TI + TWII),P)
     2/TKL(.5*(TI + TWII), P))**(1./3.)/D4
      GO TO 10
C
C
C     TRANSITION FLOW
C
    7 U4 = .115*((RE)**(2./3.) - 125.)*((CPL(TI,P)*VISL(TI, P)/TKL(TI, P
     1))**(1./3.))*(1. + (D4/GLEN)**(2./3.))*TKL(TI, P)/D4
      GO TO 10
C
C     BOILING IN INNER TUBE
C
C
C     TESTS FOR NUCLEATE OR FILM BOILING
C
    2 IF (X .LE..95) 29, 30
C
```

```
C       NUCLEATE BOILING
C
   29 RE = D4*FLOW*((1. - X)/RHOG(TSAT, P) + X/RHOL(TSAT, P))*RHOL(TSAT
     1, P)/(12.*AIN*VISL(TSAT, P))
      U4 = .00122*(TKL(TSAT, P)**(.79))*(CPL(TSAT, P)**(.45))*(RHOL(TSAT
     1, P)**(.49))*((4.17E+08)**(.25))*((TWII - TSAT)**(.24))*((VP(TWII,
     2P) - VP(TSAT, P))**(.75))*S(RE)/((SQRTF(.0031))*(VISL(TSAT, P)**(.
     329))*(HVAP**(.24))*(RHOG(TSAT, P)**(.24)))
      REL = D4*FLOW/(12.*AIN*VISL(TSAT, P))
      U4 = U4 + 12.*.023*(REL**(.8))*((CPL(TSAT, P)*VISL(TSAT, P)/TKL(TS
     1AT, P))**(.4))*(TKL(TSAT, P)/D4)*((RE/RE_D**(.8))
      GO TO 10
C
C
C       FILM BOILING
C
   30 U4 = .00136*TKL(TSAT, P)*(D4*FLOW/(12.*AIN*VISL(TSAT, P))**(.853))
     1*((RHOL(TSAT, P)/RHOG(TSAT, P))**(2./3.))*((CPL(TSAT, P)*VISL(TSAT
     2, P)/TKL(TSAT, P))**(1./3.))*((X/(1. - X))**(.147))
      GO TO 10
C
C       STEAM IN INNER TUBE
C
    3 RE = D4*FLOW/(12.*AIN*VIS(TI, P))
C
C       CHECKS REYNOLDS NUMBER FOR FLOW REGIME
C
      IF (RE .LE. 2100.) 11, 12
   12 IF (RE .GE. 10000.) 13, 14
C
C       LAMINAR FLOW
C
   11 GRZ = 12.*FLOW*CP(TI,P)/(THC(TI,P)*GLEN)
      IF (GRZ .LE. 12.) 16, 15
   15 U4 = 1.75*12.*THC(TI,P)*CUBERTF(GRZ)*(VIS(TI, P)/VIS(TWII, P))**(.
     114)/D4
      GO TO 10
   16 U4 = 24.*THC(TI,P)*GRZ/(D4*4.*ATANF(1.))
      GO TO 10
C
C       TURBULENT FLOW
C
   13 U4=.023*12.*THC(.5*(TI+TWII),P)*(D4*FLOW/(12.*AIN*VIS(.5*(TI+TWII)
     1,P)))**(.8)*(CP(.5*(TI+TWII),P)*VIS(.5*(TI+TWII),P)/THC(.5*(TI+T
     2WII),P))**(1./3.)*(VIS(TI,P)/VIS(TWII,P))**(.14)/D4
      GO TO 10
C
C       TRANSITION FLOW
C
   14 U4 = .116*((RE)**(2./3.) - 125.)*((CP(TWII, P)*VIS(TWII, P)/THC(TW
     1II, P))**(1./3.))*((VIS(TI, P)/VIS(TWII, P))**(.14))*(1. + (D4/GLE
     2N)**(2./3.))*THC(.5*(TI + TWII), P)/D4
C
C       STEAM IN THE ANNULUS
C
   10 RE = (D2 - D3)*FLOW/(12.*AOUT*VIS(TO, P))
```

```
C
C     CHECKS REYNOLDS NUMBER FOR FLOW REGIME
C
      IF (RE .LE. 2100.) 17, 18
   18 IF (RE .GE. 10000.) 19, 20
C
C     LAMINAR FLOW
   17 GRZ = 12.*FLOW*CP(.5*(T0 + TWI0), P)/(THC(.5*(T0 + TWI0), P)* LENT
     1H)
      IF (GRZ .LE. 12.) 21, 22
   21 U3 = 24.*THC(.5*(T0 + TWI0), P)*GRZ/(D3*4.*ATANF(1.))*(VIS(T0, P)/
     1VIS(TWI0, P))**(.14)
      GO TO 23
   22 U3 = 1.75*12.*THC(.5*(T0 + TWI0), P)*CUBERTF(GRZ)*(VIS(T0, P)/VIS(
     1TWI0, P))**(.14)/D3
   23 GRZ = 12.*FLOW*CP(.5*(T0 + TWOI), P)/(THC(.5*(T0 + TWOI), P)* LENT
     1H)
      IF (GRZ .LE. 12.) 24, 25
   24 U2 = 24.*THC(.5*(T0 + TWOI), P)*GRZ/(D2*4.*ATANF(1.))*(VIS(T0, P)/
     1VIS(TWOI, P))**(.14)
      GO TO 50
   25 U2 = 1.75*12.*THC(.5*(T0 + TWOI), P)*CUBERTF(GRZ)*(VIS(T0, P)/VIS(
     1TWOI, P))**(.14)/D2
      GO TO 50
C
C     TURBULENT FLOW
C
   19 U3 = .023*12.*(RE)**(.8)*(CP(T0, P)*VIS(T0, P)/THC(T0, P))**(.4)*(
     1D2/D3)**(.45)*THC(T0, P)/(D2 - D3)
      U2 = .023*12.*THC(.5*(T0 + TWOI), P)*((D2 - D3)*FLOW/(12.*ABOUT*VIS
     1(.5*(T0 + TWOI), P)))**(.8)*(CP(.5*(T0 + TWOI), P)*VIS(.5*(T0 + TW
     2OI), P)/THC(.5*(T0 + TWOI), P))**(1./3.)*(VIS(T0, P)/VIS(          T
     3WOI , P))**(.14)/(D2 - D3)
   20 GO TO 50
C
C     TRANSITION FLOW
C
   20 U3 = .116*((RE)**(2./3.) - 125.)*((CP(TWI0, P)*VIS(TWI0, P)/THC(TW
     1I0, P))**(1./3.))*(VIS(T0, P)/VIS(TWI0, P))**(.14)*(1. + (D3/LENTH
     2)**(2./3.))*THC(TWI0, P)/D3
      U2 = .116*((RE)**(2./3.) - 125.)*((CP(TWOI, P)*VIS(TWOI, P)/THC(TW
     2OI, P))**(1./3.))*(VIS(T0, P)/VIS(TWOI, P))**(.14)*(1. + ((D2 - D3
     3)/LENTH)**(2./3.))*THC(TWOI, P)/(D2 - D3)
C
C     STEAM CONDENSING ON OUTER WALL OF INNER TUBE
C
   50 IF(TWI0.LE.TSAT) 51,52
   51 DELT=TSAT-TWI0
      TF=(TSAT+TWI0)/2.
      H=1.1*(TKL(TF,P))**(.75)*(RHOL(TF,P)*3600.)**(.5)*(HVAP*32.174/(VI
     1SL(TF,P)*DELT*GLEN2)*12.)**(.25)
      U3=H*DELT/(T0-TWI0)
   52 RETURN
      END
```

```
      FUNCTION RHOG(T, P)
C
C     TEMPERATURE IN DEG F, PRESSURE IN PSIA, STEAM DENSITY WILL BE IN
C     LB/FT3.  GOOD UP TO 650 DEG F, 3000 PSIA
C
      A = 1.8/(T + 459.69)
      D = P/14.696
      G1 = 62.546*A - 1.6246E+05*A*A
      G2 = .21828 - 1.2697E+05*A*A
      G3 = 5.635E-04 - 6.768E-08*((1000.*A)**24)
      B0 = 1.89 - 2041.62*A*(10.**(80870.*A*A))
      B = B0 + 50*D*G1*A*D + (B9**4)*G2*A*A*A*D*D*D - B0*G3*((A*D*B0)**
     1 12)
      V = 4.55564/(A*D) + B
      RHOG = 28317./(454.*V)
      RETURN
      END
```

```
      FUNCTION RHOL(T, P)
C
C     TEMPERATURE MUST BE IN DEG F, PRESSURE NOT NEEDED BUT IS INCLUDED
C     FOR CONSISTANCY WITH OTHER PHYSICAL PROPERTY SUBROUTINES, DENSITY
C     OF SATURATED LIQUID IN LB/FT3
C
      TE = 374.11 - ((T + 459.69)/1.8 - 273.16)
      RHOL = 28317.*(1. + .1342489*CUBERTF(TE) - 3.946263E-03*TE)/(454.*
     1(3.1975 - .3151546*CUBERTF(TE) - 1.203374E-03*TE + 7.48908E-13*TE*
     2*4))
      RETURN
      END
```

```
      FUNCTION VIS(T, P)
C
C     TEMPERATURE MUST BE IN DEGREES F, PRESSURE IN PSIA, VISCOSITY WILL
C     BE IN LB/FT HR
C
      PE = P/14.2233
      TE = (T + 460.)/1.8
      VIS = 2.3936E-08*SQRTF(TE)/(1. + 1039.63/TE) + 1.4E-10*PE+ 1.9E-09
     1*(EXPF(2.095E+18*PE*PE/(TE**8)) - 1.)
      VIS = 929.*3600.*32.2*VIS/454.
      RETURN
      END
```

```
      FUNCTION VISL(T, P)
C
C     TEMPERATURE MUST BE IN DEG F, PRESSURE IS NOT NECESSARY BUT IS
C     INCLUDED FOR CONSISTANCY WITH OTHER PHYSICAL PROPERTY SUBROUTINES,
C     LIQUID WATER VISCOSITY WILL BE IN LB/FT HR, RANGE OF TEMPERATURES
C     FROM 60 TO 600 DEG F
C
      VISL = EXPF(-1.1429*LOGF(T) + 2.302585*2.49290)
      RETURN
      END
```

```
      FUNCTION CP(T, P)
C
C     TEMPERATURE MUST BE IN DEGREES F, PRESSURE IN PSIA, AND HEAT
C     CAPACITY WILL BE IN BTU/LB DEG F
C
      IF(P.GT.200.) 26,29
   29 IF (P .GT. 160.)1, 12
   12 IF (P .GT. 90.) 2, 13
   13 IF (P .GT. 45.) 3, 14
C
C     CONSTANTS FOR 30 PSIA STEAM
C
   14 IF (T .GT. 400.) 4, 15
   15 X1 = 200
      X2 = 400
      Y1 = .51
      Y2 = .47
      GO TO 5
C
C     CONSTANTS FOR 60 PSIA STEAM
C
    3 IF (T .GT. 550.) 4, 16
   16 IF (T .GT. 350.) 5, 17
   17 X1 = 250
      X2 = 350
      Y1 = .55
      Y2 = .50
      GO TO 5
    6 X1 = 350
      X2 = 550
      Y1 = .50
      Y2 = .49
      GO TO 5
C
C     CONSTANTS FOR 120 PSIA STEAM
    2 IF (T .GT. 750.) 4, 18
   18 IF (T .GT. 600.) 7, 19
   19 IF (T .GT. 500.) 8, 20
   20 X1 = 300
      X2 = 500
      Y1 = .57
      Y2 = .52
      GO TO 5
    8 X1 = 500
      X2 = 600
      Y1 = .52
      Y2 = .50
      GO TO 5
    7 X1 = 600
      X2 = 750
      Y1 = .50
      Y2 = .50
      GO TO 5
C
C     CONSTANTS FOR 200 PSIA STEAM
C
```

```
    1 IF (T .GT. 1150.) 4, 21
   21 IF (T .GT. 750.) 9, 22
   22 IF (T .GT. 550.) 10, 23
   23 IF (T .GT. 450.) 11, 24
   24 X1 = 350
      X2 = 450
      Y1 = .72
      Y2 = .58
      GO TO 5
   11 X1 = 450
      X2 = 550
      Y1 = .58
      Y2 = .54
      GO TO 5
   10 X1 = 550
      X2 = 750
      Y1 = .54
      Y2 = .51
      GO TO 5
    9 X1 = 750
      X2 = 1150
      Y1 = .51
      Y2 = .54
    5 CP = (Y2 - Y1)*(T - X1)/(X2 - X1) + Y1
      RETURN
    4 TE = (T + 460.)/1.8
      CP7 = 1.4720 + 7.5566E-04*TE + 47.8365/TE1
      CP = 9.47799*454.*CP7/1.8E+04
      RETURN
   28 TI=T
      IF(T.LE.(0.116*P+330.)) 30,31
   30 C=((P-1000.)/1000.)**2
      A=-0.010*(1.+5.*C)
      B=0.7+4.5*C
      GO TO 42
   31 IF(T.LE.(0.15*P+350.)) 32,33
   32 A=-0.009
      B=0.75+0.00135*(P-1000.)
      GO TO 42
   33 IF(T.LE.(0.167*P+470.)) 34,37
   34 IF(P.GT.800.) 35,36
   35 A=-0.004
      B=0.75+0.00075*(P-800.)
      GO TO 42
   36 A=-(0.0025+(P-400.)*2.5E-06)
      B=0.4+0.00075*(P-400.)
      GO TO 42
   37 IF(T.LE.(0.228*P+440.)) 38,39
   38 A=-0.0012
      B=0.202*LOGF(P)-1.1
      GO TO 42
   39 IF(TI.LE.(0.222*P+555.)) 40,41
   40 A=-0.00045
      B=0.156*LOGF(P)-0.37
      GO TO 42
   41 TI=0.222*P+555.
```

```
      GO TO 39
   42 CP=A*(TI-600.)+B
      RETURN
      END
```

```
      FUNCTION CPL(T,P)
C
C     TEMPERATURE IN DEG F , PRESSURE IN PSIA , HEAT CAPACITY IN
C     BTU/(LB*DEG F)          TEMPERATURE LESS THAN 650 F , PRESSURE LESS
C     THAN 4000. PSIA
C
      A=(.9*T-660.)/(T-675.)
      B=-(10.**(-11000./(T+459.69)+9.90)/4000.)
      CPL=A+B*P
      RETURN
      END
```

```
      FUNCTION THC(T, P)
C
C     TEMPERATURE IN DEGREE F, PRESSURE IN PSIA, THERMAL CONDUCTIVITY
C     WILL BE IN BTU/FT HR DEG F
C
      PE = P/14.2233
      TE = (T + 460.)/1.8
      THC = 3.191E-06*SQRT(TE)*EXP(1.5234E-09*(TE**3)) + 2.486E-05*(EX
     1P(1.773E+09*PE/(TE**4)) - 1.)
      THC = THC*3600.*48*3600./(252.*1.8)
      RETURN
      END
```

```
      FUNCTION TKL(T, P)
C      TEMPERATURE IS IN DEG F.,  THERMAL CONDUCTIVITY IS IN BTU/HR*FT*D
C     DEG F  ,   RELATION VALID FOR  SATURATED LIQUID, INDEPENDENT OF
C     PRESSURE
      IF(T.LT.200.) 1,2
    1 TKL=0.333+0.0013*T
      RETURN
    2 IF(T.LT.300.) 3,4
    3 TKL=0.395
      RETURN
    4 IF(T.LT.400.) 5,6
    5 TKL=0.434-0.00013*T
      RETURN
    6 IF(T.LT.500.) 7,8
    7 TKL=0.5-0.0003*T
      RETURN
    8 IF(T.LT.600.) 9,10
    9 TKL=0.35-0.00055*(T-500.)
      RETURN
   10 TKL=0.29-0.0007*(T-600.)
      RETURN
      END
```

```
      FUNCTION VP(T, P)
C
C     TEMPERATURE IN DEG F, WATER VAPOR PRESSURE WILL BE IN LB/FT2.
C     GOOD FOR 120 TO 700 DEG F.  PRESSURE NOT NECESSARY, BUT IS INCLUDE
C     FOR CONSISTANCY WITH OTHER PHYSICAL PROPERTY SUBROUTINES
C
      A = 3.346313
      B = 4.141138E-02
      C = 7.515484E-09
      D = 1.379446E-02
      E = 6.56444E-11
      TE = (T + 459.69)/1.8
      X = 647.27 - TE
      VP = 2115.224*210.167*(10.**(-X*(A + B*X + C*X*X*X + E*X**4)/(TE*(
     11. + D*X))))
      RETURN
      END
```

```
      SUBROUTINE NSHL17 (TWAT, TSTEAM, T0, TI, LENGTH, DLENTH, SUPSIG, N
     1, ISKIP, B, JTWIG,     SIGM, X, TW0I2, TWI0, TWII, TWII2, TW0II, TW
     2III, EPSIN, EPSOUT)
C
C     THIS SUBROUTINE ASSIGNS INITIAL VALUES TO SOME OF THE PARAMETERS I
C     N THE COMPUTATION.
C
C
      DIMENSION B(1000, 5),VOLTS(6), AMPS(6), T(7), DQ(12), LQ(12), LT(7
     1)
      TYPE INTEGER SUPSIG
      TYPE REAL LQ, LT, LENGTH
      COMMON /SNE/ LQ, WO
      DATA ((LQ(I), I = 1, 12) = 0., 6., 13., 19., 26., 32., 39., 45.,
     152., 58., 65., 71.), ((LT(J), J = 1, 7) = 0., 6., 19., 32., 45.,
     256., 71.)
      JTWIG=1
      SUPSIG=1
      TI = TWAT
      T0 = TSTEAM
       EPSOUT=.7
      EPSIN = .7
      SIGM = .1713E-08
      LENGTH = .2
      TW0I2 = TWALL(DLENTH)
      TWIG=T1
      TWII = TWI0
      TWII2 = TWII
      TW0II=TW0I2
      TWIII=TWII2
      N = 1
      B(N, 1) = 0.
      B(N, 2) = TI
      B(N, 3) = T0
      B(N, 4) = TWALL(0.)
      B(N,5)=TWI0
      X=0.
      IF (ISKIP .EQ. 1) 26, 27
C     COMPUTES THE NET HEAT INPUT TO THE EXPERIMENTAL BOILER
C     APPARATUS AS A FUNCTION OF LENGTH.  THIS COMPUTATION MAY BE
C     PERFORMED AT WILL BY SETTING
C           ISKIP = 1 TO PERFORM COMPUTATION
C           ISKIP = 2 TO BYPASS COMPUTATION
   26 READ (50, 100) (VOLTS(I), I = 1, 6), (AMPS(I), I = 1, 6), (T(I), I
     1= 2, 7), TIMS
      T(1) = T(2)
      DO 1 I = 2, 12
      IF (LQ(I) .LE. 65.) 4, 5
    4 IF (LQ(I) .LE. 52.) 6, 7
    6 IF (LQ(I) .LE. 39.) 8, 9
    8 IF (LQ(I) .LE. 26.) 10, 11
   10 IF (LQ(I) .LE. 13.) 12, 13
   12 J = 1
      GO TO 2
    5 J = 6
      GO TO 2
```

```
    7 J = 5
      GO TO 2
    9 J = 4
      GO TO 2
   11 J = 3
      GO TO 2
   13 J = 2
    2 IF (LQ(I) .LE. 55.) 14, 15
   14 IF (LQ(I) .LE. 45.) 16, 17
   16 IF (LQ(I) .LE. 32.) 18, 19
   18 IF (LQ(I) .LE. 19.) 20, 21
   20 IF (LQ(I) .LE. 0.) 22, 23
   22 K = 1
      GO TO 3
   15 K = 6
      GO TO 3
   17 K = 5
      GO TO 3
   19 K = 4
      GO TO 3
   21 K = 3
      GO TO 3
   23 K = 2
    3 OINPUT = 2.*12.*SQRT(0.)*VOLTS(J)*AMPS(J)*115./(1054.6*169.)
      TH1 = (T(K + 1) - T(K))*(LQ(I) - LT(K))/(LT(K + 1) - LT(K)) + T(K)
      TH2 = (T(K + 1) - T(K))*(LQ(I - 1) - LT(K))/(LT(K + 1) - LT(K)) +
     1T(K)
      CLOSS = (.5*(TH1 + TH2) - TINS)*.0533*ATANF(1.)*XLGMN(3.3, 7.
     13)/6.
      QO(I) = OINPUT - CLOSS
      QL(I) = QO(2)
      ISXIF = 2
   27 RETURN
  100 FORMAT (6(2X,F4.3),/,6(2X,F3.1),/,6(2X,F5.0),/,2X,F4.0)
      END
```

```
      FUNCTION TWALL(XL)
C
C
C     OUTSIDE WALL TEMPERATURE OF THE OUTSIDE TUBE, READ AS INPUT DATA I
C     N THE MAIN PROGRAM
      DIMENSION TC(12), L(12)
      COMMON /TW0/ TC
      TYPE REAL L
      DATA ((L(I), I = 1, 12) = 0., 6., 12.5, 19., 25.5, 32., 38.5, 45.,
     1 51.5, 58., 64.5, 71.)
      IF (XL .LT. 64.5) 1, 2
    1 IF (XL .LT. 58.) 3, 4
    3 IF (XL .LT. 51.5) 5, 6
    5 IF (XL .LT. 45.) 7, 8
    7 IF (XL .LT. 38.5) 9, 10
    9 IF (XL .LT. 32.) 11, 12
   11 IF (XL .LT. 25.5) 13, 14
   13 IF (XL .LT. 19.) 15, 16
   15 IF (XL .LT. 12.5) 17, 18
   17 IF (XL .LT. 6.) 19, 20
   19 N = 2
      GO TO 30
    2 N = 12
      GO TO 30
    4 N = 11
      GO TO 30
    6 N = 10
      GO TO 30
    8 N = 9
      GO TO 30
   10 N = 8
      GO TO 30
   12 N = 7
      GO TO 30
   14 N = 6
      GO TO 30
   16 N = 5
      GO TO 30
   18 N = 4
      GO TO 30
   20 N = 3
   30 TWALL = (TC(N) - TC(N - 1))*(XL - L(N - 1))/(L(N) - L(N - 1)) + TC
     1(N - 1)
      RETURN
      END
```

```
      SUBROUTINE FROY(C,TI,TO,POLYN,ROOT,IERROR)
C
C     THIS SUBROUTINE LOCATES THE ROOT OF THE FOURTH DEGREE EQUATION
      DIMENSION C(5)
      IERROR=0
      X1=TI+459.69
      X2=TO+459.69
      DO 10 I=1,6
      XINT=(X2-X1)/10.
      X=X1-XINT
      DO 7 J=1,11
      X=X+XINT
      PX=C(5)*X**4+C(4)*X**3+C(3)*X**2+C(2)*X+C(1)
      IF(J.EQ.1) 1,2
    1 P1=PX
      GO TO 7
    2 IF(P1*PX) 4,3,6
    3 ROOT=X
      POLYN=0.
      RETURN
    4 GO TO 8
    6 IF(J.EQ.11) 12,7
    7 CONTINUE
    8 IF(I.LT.5) 9,11
    9 X2=X
   10 X1=X-XINT
   11 ROOT=(2.*X-XINT)/2.
      POLYN=C(5)*ROOT**4+C(4)*ROOT**3+C(3)*ROOT**2+C(2)*ROOT+C(1)
      RETURN
   12 IERROR=1
      RETURN
      END
```

```
      FUNCTION XLGMN (A, B)
C
C
C     LOGARITHMIC MEAN OF ANY TWO POSITIVE NUMBERS.  ORDER OF SUBMISSION
C     TO THE FUNCTION IS IRREVELANT
      IF (A .EQ. B) 2, 4
    4 IF (A .GT. B) 5, 7
    5 C = A
      D = B
      GO TO 1
    7 C = B
      D = A
    1 XLGMN = (C - D)/LOGF(C/D)
      GO TO 3
    2 XLGMN = A
    3 RETURN
      END
```

```
      FUNCTION S(RE)
C
C     THIS COMPUTES THE SUPPRESSION FACTOR AS DEFINED BY JOHN CHEN, FOR
C     USE IN THE NUCLEATE BOILING COEFFICIENT.
C
      IF (RE .LT. 3000.) 1, 2
    1 S = 1.0
      RETURN
    2 IF (RE .LT. 17000.) 3, 4
    3 S = 1. - .16*LOGF(RE/3000.)/LOGF(17./3.)
      RETURN
    4 IF (RE .LT. 350000.) 5, 3
    5 S = .04 - .72*LOGF(RE/17000.)/LOGF(350./17.)
      RETURN
    6 S = .1
      RETURN
      END
```

```
      SUBROUTINE PLIT(NG,B,N,M,NL,NS,KX,JX)
      DIMENSION OUT(101),YPR(11),IANG(9),A(1000),B(KX,JX)
      DATA (IDJM =1H1), ((IANG(I), I = 1, 9) =1H.,1H*,1H+,1H-,1HA,1HB,
     1 1HC, 1HD, 1HE)
      TYPE INTEGER OUT
      I=1
      DO 39 J=1,M
      DO 39 K=1,N
      A(I)=B(K,J)
      I=I+1
39    CONTINUE
    1 FORMAT(1H1,60X,7H CHART ,I3,//)                                  PLOT 03
    2 FORMAT(1H ,F11.4,5X,10(A1))                                      PLOT 04
    3 FORMAT(1H )                                                      PLOT 04
    7 FORMAT(1H ,16X,10(1H.                    .          .          .  PLOT 04
     1                    .          .          .          .          .) PLOT 04
    8 FORMAT(1H0,9X,11F10.4)                                           PLOT 04
      NLL=0L                                                           PLOT 05
      IF(NS) 16, 16, 10                                                PLOT 05
   10 DO 15 I=1,N                                                      PLOT 05
      DO 14 J=I,N                                                      PLOT 05
      IF(A(I)-A(J)) 14, 14, 11                                         PLOT 05
   11 L=I-1                                                            PLOT 05
      LL=J-1                                                           PLOT 06
      DO 12 K=1,M                                                      PLOT 06
      L=L+N                                                            PLOT 06
      LL=LL+N                                                          PLOT 06
      F=A(L)                                                           PLOT 06
      A(L)=A(LL)                                                       PLOT 06
   12 A(LL)=F                                                          PLOT 06
   14 CONTINUE                                                         PLOT 06
   15 CONTINUE                                                         PLOT 06
   16 IF(NLL) 20, 18, 20                                               PLOT 07
   18 NLL=50                                                           PLOT 07
   20 WRITE(6,1)NO                                                     PLOT 07
      BLANK=0                                                          PLOT 08
      XSCAL=(A(N)-A(1))/(FLOATF(NLL-1))                                PLOT 09
      YMIN=1.0E75                                                      PLOT 09
      YMAX=-1.0E75                                                     PLOT 09
      M1=N+1                                                           PLOT 09
      M2=N*M                                                           PLOT 09
      DO 40 J=M1,M2                                                    PLOT 09
      IF(A(J)-YMIN) 26,26,20                                           PLOT 09
   20 IF(A(J)-YMAX) 40,40,30                                           PLOT 09
   26 YMIN=A(J)                                                        PLOT 10
      GO TO 40                                                         PLOT 10
   30 YMAX=A(J)                                                        PLOT 10
   40 CONTINUE                                                         PLOT 10
      YSCAL=(YMAX-YMIN)/100.0                                          PLOT 10
      XB=A(1)                                                          PLOT 10
      L=1                                                              PLOT 10
      MY=M+1                                                           PLOT 11
      DO 60 I=1,NLL                                                    PLOT 11
      F=I-1                                                            PLOT 11
      XPR=XB+F*XSCAL                                                   PLOT 11
      IF(A(L)-XPR) 50,50,70                                            PLOT 11
```

```
 50 DO 55 IX=1,101                                                      PLOT 11
 55 OUT(IX)=BLANK                                                       PLOT 11
    DO 60 J=1,MY                                                        PLOT 12
    LL=L+J*N                                                            PLOT 12
    JP=((A(LL)-YMIN)/YSCAL)+1.0                                         PLOT 12
    OUT(JP)=IANG(J)
 60 CONTINUE                                                            PLOT 12
    WRITE(6,2)XPR,(OUT(IZ),IZ=1,101)                                    PLOT 12
    L=L+1                                                               PLOT 12
    GO TO 80                                                            PLOT 13
 70 WRITE(6,3)                                                          PLOT 13
 80 CONTINUE                                                            PLOT 13
    WRITE (6, 3)
    WRITE (6, 3)
    WRITE(6,7)                                                          PLOT 13
    YPR(1)=YMIN                                                         PLOT 13
    DO 90 KN=1,9                                                        PLOT 13
 90 YPR(KN+1)=YPR(KN)+YSCAL*10.0                                        PLOT 13
    YPR(11)=YMAX                                                        PLOT 14
    WRITE(6,8)(YPR(IP),IP=1,11)                                         PLOT 14
    RETURN                                                              PLOT 14
    END                                                                 PLOT 14
```

```
      FUNCTION QA(XL)
C
C
C     THE Q FUNCTION, NET HEAT INPUT TO BOILER TUBE AS A FUNCTION OF LE-
C     NGTH. FOR THE EXPERIMENTAL APPARATUS THE FUNCTION IS DEFINED
C     IN SUBROUTINE NSHLIZ
      COMMON /ONE/ LQ, QQ
      DIMENSION LQ(12), QQ(12)
      TYPE REAL LQ
      IF (XL .LT. LQ(11)) 1, 2
    1 IF (XL .LT. LQ(10)) 3, 4
    3 IF (XL .LT. LQ( 9)) 5, 6
    5 IF (XL .LT. LQ( 8)) 7, 8
    7 IF (XL .LT. LQ( 7)) 9, 10
    9 IF (XL .LT. LQ( 6)) 11, 12
   11 IF (XL .LT. LQ( 5)) 13, 14
   13 IF (XL .LT. LQ( 4)) 15, 16
   15 IF (XL .LT. LQ( 3)) 17, 18
   17 IF (XL .LT. LQ( 2)) 19, 20
   19 K=2
      GO TO 23
    2 K = 12
      GO TO 23
    4 K = 11
      GO TO 23
    6 K = 10
      GO TO 23
    8 K = 9
      GO TO 23
   10 K = 8
      GO TO 23
   12 K = 7
      GO TO 23
   14 K = 6
      GO TO 23
   16 K = 5
      GO TO 23
   18 K = 4
      GO TO 23
   20 K = 3
   23 QA=(QQ(K)-QQ(K-1))*(XL-LQ(K-1))/(LQ(K)-LQ(K-1))+QQ(K-1)
      RETURN
      END
```

## 10.3 Input Data for *CREEP*

### 10.3.1 First Record

This record contains the four tube diameters associated with the boiler being simulated. These are expressed in inches and ordered from largest (outside diameter of outer tube) to smallest (inside diameter of inner tube), the inner tube wall thermal conductivity and the outer tube wall thermal conductivity, both in Btu/hr-ft-$^{o}$F. The format, beginning in column 1, is

--D.DDD--D.DDD--D.DDD--D.DDD--KK.KK--KK.KK

where the dashes represent blank columns.

### 10.3.2 Second Record

Water flow rate in cm$^3$/min, outlet steam temperature in $^{o}$F, system operating pressure in psia, feed water temperature in $^{o}$F, saturation temperature at operating pressure in $^{o}$F, length of boiler tube in inches, and the latent heat of vaporization of water at operating pressure in Btu/lb are included on the second record. The format is

--FF.F--TTTT.--PPP.--TTT.--TTT.--LLL.-HHHH.H

### 10.3.3 Third Record

The eleven measured temperatures, in $^{o}$F, of the outside wall of the outer tube go in this record, ordered from the bottom of the boiler (water inlet) to the top. These are printed by the temperature recorder as points two through twelve and are put on the data card in that order, thus:

--TTTT. (repeat eleven times)

### 10.3.4 Fourth and Fifth Records

Autotransformer dial settings for the six heater sections as a fraction between zero and one are on the fourth record and current drawn, in amperes, on the fifth. These data are ordered from the bottom of the boiler to the top.

--.DDD (repeat six times)

--A.A (repeat six times)

### 10.3.5 Sixth Record

This contains the inside insulation surface temperatures in $^{o}F$ from the bottom to the top of the boiler. They are printed by the temperature recorder as points twenty through fifteen and must be on the data card in this order.

--TTTT. (repeat six times)

### 10.3.6 Seventh Record

The seventh record contains the outside insulation surface temperatures in $^{o}F$. It is the average of the temperatures measured by thermocouples twenty-one and twenty-two.

--TTT.

Emissivities of the inner tube, outer wall, and the outer tube, inner wall are assigned to NSHLIZ. These quantities, if considered as input data, should be reestablished in this subprogram.

## 10.4 Experimental Data for Simulation

The following data (2 runs) were obtained from the experimental re-entry boiler tube and may be used for simulations. The numbers are in the order of their appearance on the data cards.

| | | |
|---|---|---|
| FLOW, $cm^3$/min | 23.0 | 33.0 |
| TSTEAM, $^{o}F$ | 260 | 417 |
| P, psia | 15 | 205 |
| TWAT, $^{o}F$ | 88 | 355 |
| TSAT, $^{o}F$ | 212 | 384 |
| LENGTH, in. | 68 | 68 |
| HVAP, Btu/lb | 970.3 | 841.1 |
| Outer Wall Temperatures, $^{o}F$ | | |
| 2 | 1078 | 1075 |
| 3 | 943 | 973 |
| 4 | 1043 | 1068 |

| | | |
|---|---|---|
| 5 | 925 | 1100 |
| 6 | 1063 | 1080 |
| 7 | 983 | 1013 |
| 8 | 1105 | 1081 |
| 9 | 1075 | 1053 |
| 10 | 1095 | 1080 |
| 11 | 1050 | 1012 |
| 12 | 1085 | 1080 |
| Tube Physical properties | | |
| D1, in. | 0.675 | 0.675 |
| D2, in. | 0.493 | 0.493 |
| D3, in. | 0.250 | 0.250 |
| D4, in. | 0.194 | 0.194 |
| KI, Btu/hr-ft-$^{o}$F | 9.4 | 9.4 |
| KO, Btu/hr-ft-$^{o}$F | 9.4 | 9.4 |
| Autotransformer Power Input, amp | | |
| 1 | 3.5 | 7.1 |
| 2 | 3.0 | 8.8 |
| 3 | 2.8 | 6.77 |
| 4 | 2.8 | 6.12 |
| 5 | 2.8 | 5.33 |
| 6 | 2.8 | 5.60 |
| Autotransformer Power Input, scale setting | | |
| 1 | 0.470 | 0.240 |
| 2 | 0.450 | 0.260 |
| 3 | 0.380 | 0.260 |

| | | |
|---|---|---|
| 4 | 0.400 | 0.210 |
| 5 | 0.330 | 0.185 |
| 6 | 0.320 | 0.170 |
| Inner Insulation Temperature, $^{o}F$ | | |
| 1 | 1187 | 1195 |
| 2 | 1122 | 1238 |
| 3 | 1112 | 1213 |
| 4 | 1125 | 1140 |
| 5 | 1102 | 1121 |
| 6 | 1110 | 1117 |
| Outer Insulation temperature, $^{o}F$ | | |
| | 305 heaters wired in series | 348 heaters wired in parallel |

## 10.5 Non-Experimental Simulation

*CREEP* is written to simulate the experimental appratus described in Ref. (11). Simulation of non-experimental reentry tube boilers is possible if the following modifications are made in *CREEP*:

1. Disable the net heat input generating mechanism by setting ISKIP = 2.

2. Disable the statements QS = QA(LENGTH) and QS = QS*DLENGTH located four statements after 53 by removing them or putting a C in Column 1.

3. Change the last characters of statement 20: QS. Format statement No. 200 need not be altered.

Required input data are those contained on Records 1 through 3.

Maximum temperature and pressure for subcritical operation are 650$^{o}$F and 2000 psia. Higher pressure operation may be achieved by extending the validity of the physical property subprograms above their present limits.

## 10.6 Appendix to Mathematical Procedure

The system of six equations

$$QS = QO + QI$$

$$QS = \frac{(KO)(AO)}{BO}(TWOO - TWOI)$$

$$QO = (U2)(A2)(TWOI - TO) - U3(A3)(TO - TWIO)$$

$$QI = (U4)(A4)(TWII - TI)$$

$$QI = \frac{(AI)(KI)}{BI}(TWIO - TWII)$$

$$QS - (TWOI - TO)(U2)(A2) = \frac{\sigma(A3)}{\frac{1}{\varepsilon_1} + \frac{A3}{A2}(\frac{1}{\varepsilon_o} - 1)}(TWOI^4 - TWIO^4)$$

with temperatures in $^oR$ can be rearranged to get:

$$C(5)(TWIO)^4 + C(4)(TWIO)^3 + C(3)(TWIO)^2 + C(2)(TWIO) + C(1) = 0$$

$$TWOI = Y4(TWIO) + Y5$$

$$TWII = Y1(TI) + Y2(TWIO)$$

$$QO = U2(A2)(TWOI - TO) + (U3)(A3)(TWIO - TO)$$

$$QI = \frac{(KI)(AI)}{BI}(TWIO - TWII)$$

$$QS = QO + QI$$

This system of six sequential equations can be solved if the solution to the fourth degree equation can be found. A subroutine has been written for this purpose. The coefficients Y1, Y2, Y3, Y4, Y5, Y6, C(1), C(2), C(3), C(4), and C(5) are listed below:

$$Y1 = \frac{U4(A4)}{(U4)(A4) + \frac{KI(AI)}{BI}}$$

$$Y2 = \frac{KI(AI)}{BI\left[(U4)(A4) + \frac{KI(AI)}{BI}\right]}$$

$$Y3 = U2(A2) + \frac{KO(AO)}{BO}$$

$$Y4 = -\left(U3\ (A3) + \frac{(AI)(KI)(Y1)}{BI}\right)\frac{1}{Y3}$$

$$Y5 = \left[(U2)(A2) + (U3)(A3)\right](TO) + \frac{(KO)(AO)}{BO}(TWOO) + \frac{(Y1)(KI)(AI)(TI)}{BI}\frac{1}{Y3}$$

$$Y6 = \frac{\sigma(A3)}{\frac{1}{\varepsilon_1} + \frac{A3}{A2}(\frac{1}{\varepsilon_o} - 1)}$$

$$C(1) = Y6(Y5)^4 + U3(A3)(TO) + \frac{(Y1)(KI)(AI)(TI)}{BI}$$

$$C(2) = (4)(Y6)(Y5)^3(Y4) - (U3)(A3) - \frac{(Y1)(KI)(AI)}{BI}$$

$$C(3) = (6)(46)(Y4 \times Y5)^2$$

$$C(4) = (4)(Y5)(Y6)(Y4)^3$$

$$C(5) = (Y4^4 - 1)(Y6)$$

## 10.7 Nomenclature

| | |
|---|---|
| $A_I$ | logarithmic mean surface area of inner tube, $ft^2$ |
| $A_o$ | logarithmic mean surface area of outer tube, $ft^2$ |
| $A_2$ | surface area along length $\Delta L$, outside of inner tube, $ft^2$ |
| $A_3$ | surface area along length $\Delta L$, inside of outer tube, $ft^2$ |
| $A_4$ | surface area along length $\Delta L$, inside of inner tube, $ft^2$ |
| $B_I$ | wall thickness of inner tube, ft |
| $B_o$ | wall thickness of outer tube, ft |
| $C_p$ | steam heat capacity, Btu/lb-$^oF$ |
| $C_{po}$ | steam heat capacity at zero pressure, joules/g-$^oC$ |
| E | autotransformer setting, unitless |

| | |
|---|---|
| I | current in amperes |
| k | thermal conductivity of steam, Btu/hr-ft-$^{o}$F |
| $k_I$ | thermal conductivity of inner tube, Btu/hr-ft-$^{o}$F |
| $k_o$ | thermal conductivity of outer tube, Btu/hr-ft-$^{o}$F |
| M | mean of two numbers |
| P | pressure |
| $P_L$ | vapor pressure of water, atm |
| $Q_{input}$ | heat produced by heaters, Btu/hr/in. of boiler |
| $Q_{loss}$ | heat lost from boiler to ambient, Btu/hr/in. of boiler |
| $Q_{net}$ | net heat put into boiler, Btu/hr/in. of boiler |
| $Q_R$ | heat transferred between tubes by radiation |
| $Q_S$ | total heat input to boiler in length $\Delta L$, Btu/hr/in. of boiler |
| $Q_2$ | heat transferred across steam film, inside of outer tube, Btu/hr-ft$^2$-$^{o}$F |
| $Q_3$ | heat transferred across steam film, particle of inner tube, Btu/hr |
| Re | Reynolds number |
| S | suppression function, unitless |
| T | temperature |
| TI | fluid temperature in inner tube, $^{o}$F |
| TO | annular steam temperature, $^{o}$F |
| TWII | temperature of inside wall of inner tube, $^{o}$F |
| TWIO | temperature of outside wall of inner tube, $^{o}$F |
| TWOI | temperature of inside wall of outer tube, $^{o}$F |
| TWOO | temperature of outside wall of outer tube, $^{o}$F |
| U2 | film coefficient inside of outer tube, Btu/hr-ft$^2$-$^{o}$F |
| U3 | film coefficient outside of inner tube, Btu/hr-ft$^2$-$^{o}$F |
| V | specific volume, cm$^3$/g |

$V_S$ one phase steam velocity, ft/hr

$V_{TP}$ two phase fluid velocity, ft/hr

$V_W$ one phase water velocity, ft/hr

X steam quality, unitless

Greek Symbols

$\varepsilon_I$ emissivity of inner tube

$\varepsilon_O$ emissivity of outer tube

$\eta$ steam viscosity, lb/ft-hr

$\eta_O$ steam viscosity, g-sec/cm$^2$

$\lambda$ latent heat of vaporization, Btu/lb

$\mu$ liquid viscosity, lb/ft-hr

$\rho_G$ steam density, lb/ft$^3$

$\rho_L$ water density, lb/ft$^3$

$\sigma$ surface tension, lb/ft, also Stefan-Boltzmann constant, Btu/hr-ft$^2$-$^oR^4$

## 10.8 Nomenclature for *CREEP*

A1, A2, A3, A4 elementary areas for heat transfer respectively of outside of outer tube, inside of outer tube, outside of inner tube, and inside of inner tube

AI, AO areas for conductive heat transfer (logarithmic mean)

AIN, AOUT cross section of inside and outside pipes

B array for storing values to be plotted

BI, BO thickness of inside and outside walls (see Fig. 2)

C array of coefficients for fourth degree equation (see Appendix 10.6)

CIRC computation parameter

D1, D2, D3, D4 diameters (same order as A)

DLENGTH elementary length (chosen small enough to have stable calculations)

DELTI, DELTO variation of inner and outer tubes fluids temperatures during a step DLENGTH

DELX variation of the steam quality during a step DLENGTH

DTW variation of TWIO during a step DLENGTH

EPSIN, EPSOUT emissivity of inner and outer walls of the annulus

FLOW flow rate of fluid through the boiler

GLEN length of convective heat transfer to the water

GLEN2 length of condensation heat transfer

HVAP heat of vaporization

IERROR error average (given by PRQY)

ISKIP parameter to enable or disable reading of QQ in NSHLIZ

JTWIO parameter to determine the model of heat transfer in the annulus

K DO loop parameter

KI, KO thermal conductivities of inner and outer walls (see Fig. 2)

LENGTH length up the boiler where the computation is performed

LENTH total length of the boiler

N current parameter for plotting

NN number of steps in computation procedure

NO graph number

P pressure

POLYN output of PRQY

QI, QO quantities of heat absorbed by fluids in inner tube and annulus

QS quantity of heat given to an elementary length computed from experimental data

QSC same variable computed by the finite difference method

ROOT root of fourth degree equation (output of PRQY)

SIGM Boltzmann's constant

| | |
|---|---|
| SUPSIG | parameter to determine the mode of heat transfer in the inner tube |
| TC | temperature on the outside wall of outer tube |
| TI, TO | temperature of the fluids in inner tube and annulus at the end of an element |
| TIC,TOC | extrapolated (first order) temperature for the calculation of the next step |
| TSAT | boiling point |
| TSTEAM | temperature of the steam at the exit of the boiler (input) |
| TWAT | temperature of the water at the inlet of the boiler (input) |
| TWII2 | temperature of the inside of the inner wall after a step DLENGTH |
| TWII1 | same temperature before this step |
| TWII | extrapolated temperature for next step calculation |
| TWIO | outside of inner wall temperature |
| TWOI1 | same as TWII1 for inside of outer tube |
| TWOI2 | same as TWII2 for inside of outer tube |
| TWOO | temperature of the outside of the outer tube |
| TWOO1 | same one |
| U2,U3,U4 | heat transfer coefficients (see Fig. 2) |
| X | steam quality |
| Y1,Y2,Y3,Y4,Y5,Y6 | parameters for equations (see Appendix 10.6) |

## 10.9 Special Nomenclature for Subprograms

Subroutine COEF

| | |
|---|---|
| GRZ | Greatz numbers |
| H | condensation heat transfer coefficient |
| RE | steam Reynolds number |
| REL | liquid Reynolds number |
| TF | film temperature for computation of H |

Subroutine NSHLIZ

| | |
|---|---|
| AMPS | amps read for the different heater elements |
| LQ | location of LT and ends of the heaters |
| LT | location of thermocouples on the inside surface of the insulation around the heaters |
| QINPUT | heat given to the system by the heaters |
| ALOSS | heat lost by the system |
| QQ | heat input to the boiler for a given length |
| TH1, TH2 | temperature at beginning and end of interval in which net heat input is computed |
| TINS | outside insulation surface temperature of experimental apparatus |
| VOLTS | volts read for different heater elements |

Subroutine PRQ4

| | |
|---|---|
| P1 | value of the polynome for X1 |
| PX | value of the polynome for X |
| XINT | elementary interval used for location of the root |
| X1 | inferior limit of total interval |
| X2 | superior limit of total interval |

Function TWALL

| | |
|---|---|
| L | location of the thermocouples 2 through 12 |

## 10.10 Location of Original Data

The calculations file for this work is in the custody of the M.I.T. School of Chemical Engineering Practice, Bldg. 1000, ORNL.

## 10.11 Literature References

1. Chen, J.S., "Correlations for Boiling Heat Transfer to Saturated Fluids in Convective Flow," Ind. Eng. Chem. Proc. Design and Devel., 5, 322-329 (1966).

2. Etherington, H., ed., "Nuclear Engineering Handbook," McGraw-Hill, New York (1958).

3. Fraas, A.P., "A New Approach to the Design of Steam Generators for Molten Salt Reactor Power Plants," unpublished data, July 15, 1968.

4. Fraas, A.P., and M.N. Ozisik, "Heat Exchange Design," John Wiley & Sons, New York (1965).

5. "Handbook of Chemistry and Physics," Chemical Rubber Publishing Company, 47th ed., p. D-91 (1966).

6. Hatschek, Emil, "The Viscosity of Liquids," G. Bell & Sons, Ltd., London, p. 80 and 88 (1928).

7. Hildebrand, F.B., "Introduction to Numerical Analysis," p. 198, McGraw-Hill, New York (1956).

8. Hottel, H.C., and A.F. Sarofim, "Radiative Transfer," p. 79, McGraw-Hill, New York (1967).

9. Keenan, J.H., and F.G. Keyes, "Thermodynamic Properties of Steam," John Wiley & Sons, New York (1936).

10. Knudson, J.G., and D.L. Katz, "Fluid Dynamics and Heat Transfer," p. 403, McGraw-Hill, New York (1958).

11. Konishi, T., and S.F. Koch, "Experimental Testing of the Reentry Tube Boiler Concept," ORNL-MIT-82, M.I.T. School of Chemical Engineering Practice, ORNL (May 8, 1969).

12. McAdams, W.H., "Heat Transmission," McGraw-Hill, New York (1954).

13. McCabe, W.L., and J.C. Smith, "Unit Operations of Chemical Engineering," McGraw-Hill, New York (1956).

14. Perry, J.H., editor, "Chemical Engineers' Handbook," 4th edition, p. 10-14, McGraw-Hill, New York (1963).

15. Polomik, E.E., S. Levy, and S.G. Sawochka, "Film Boiling of Steam-Water Mixtures in Annular Flow at 800, 1100, and 1400 psi," J. Heat Transfer, 86C, 81-88, Also ASME 62-WA-136 (1964).

ORNL-MIT-86

## INTERNAL DISTRIBUTION

1. J.M. Baker
2. S.E. Beall
3-8. A.P. Fraas
9. R.E. Helms
10. M.E. Lackey
11. M.E. LaVerne
12. R.E. MacPherson, Jr.
13. H.A. McLain
14. Lewis Nelson
15. R.A. Robinson
16. M.W. Rosenthal
17. G. Samuels
18. Dunlap Scott, Jr.
19. R.C. McWhirter
20. Oak Ridge Engineering Practice School
21-22. Central Research Library
23. Document Reference Section
24-26. Laboratory Records
27. Laboratory Records, ORNL R.C.
28. ORNL Patent Office
29-43. M.I.T. Station Files

## EXTERNAL DISTRIBUTION

44. Manson Benedict, MIT
45. M.J. Driscoll, MIT
46. L.B. Evans, MIT
47. S.M. Fleming, MIT
48. E.A. Mason, MIT
49. R.C. Reid, MIT
50. A.S. Sarofim, MIT
51. C.W. Selvidge, MIT
52. T.K. Sherwood, MIT