LOCKHEED MARTIN ENERGY RESEARCH LIBRARIES
3 4456 0514146 9

CENTRAL RESEARCH LIBRARY
DOCUMENT COLLECTION

42

OAK RIDGE NATIONAL LABORATORY
operated by
UNION CARBIDE CORPORATION
for the
U. S. ATOMIC ENERGY COMMISSION

ORNL - TM - 2993

RADIOISOTOPE PROGRAM (8000) PROGRESS REPORT FOR APRIL 1970

A. F. Rupp

OAK RIDGE NATIONAL LABORATORY
CENTRAL RESEARCH LIBRARY
DOCUMENT COLLECTION
LIBRARY LOAN COPY
DO NOT TRANSFER TO ANOTHER PERSON
If you wish someone else to see this document, send in name with document and the library will arrange a loan.

NOTICE This document contains information of a preliminary nature and was prepared primarily for internal use at the Oak Ridge National Laboratory. It is subject to revision or correction and therefore does not represent a final report.

LEGAL NOTICE

This report was prepared as an account of Government sponsored work. Neither the United States, nor the Commission, nor any person acting on behalf of the Commission:

A. Makes any warranty or representation, expressed or implied, with respect to the accuracy, completeness, or usefulness of the information contained in this report, or that the use of any information, apparatus, method, or process disclosed in this report may not infringe privately owned rights; or

B. Assumes any liabilities with respect to the use of, or for damages resulting from the use of any information, apparatus, method, or process disclosed in this report.

As used in the above, "person acting on behalf of the Commission" includes any employee or contractor of the Commission, or employee of such contractor, to the extent that such employee or contractor of the Commission, or employee of such contractor prepares, disseminates, or provides access to, any information pursuant to his employment or contract with the Commission, or his employment with such contractor.

ORNL-TM-2993

Contract No. W-7405-eng-26

Isotopes Development Center

RADIOISOTOPE PROGRAM (8000) PROGRESS REPORT FOR APRIL 1970

A. F. Rupp

Work Sponsored by
AEC Division of Isotopes Development

JUNE 1970

OAK RIDGE NATIONAL LABORATORY
Oak Ridge, Tennessee
operated by
UNION CARBIDE CORPORATION
for the
U.S. ATOMIC ENERGY COMMISSION

LOCKHEED MARTIN ENERGY RESEARCH LIBRARIES

3 4456 0514146 9

CONTENTS

Page

RADIOISOTOPE PRODUCTION AND MATERIALS DEVELOPMENT 1

NEUTRON PRODUCTS - 08-01-01 1

A. Biomedical Radioisotopes 1

1. Thulium-171 1
2. Phosphorus-33 1
3. Potassium-43 1
4. Ruthenium-97 3

B. Research Radioisotopes 3

1. Lanthanum-137 3

C. Isotopic Power 3

1. Thulium-170 3

D. Miscellaneous 4

1. HFIR Target Testing 4

E. Supporting Technology 4

1. Radioisotope Characterization 4
2. Radioisotope Special Analysis and Quality Control 4

CYCLOTRON PRODUCTS - 08-01-02 5

A. Biomedical Radioisotopes 5

1. Rubidium-83 5
2. Rubidium-84 5
3. Indium-111 5
4. Gallium-67 6
5. Neodymium-140 7

FISSION PRODUCTS - 08-01-03 7

A. Krypton-85 Enrichment 7

B. Cesium-137 Process and Product Technology 8

1. Fission Product Process Study 8
2. Cesium Chloride Slab Sources 10

C. Iodine-132 11

Page

RADIATION SOURCE DEVELOPMENT - 08-01-04 13

A. Strontium-90 Silicate Sources 13

1. Matrix Studies 13
2. Encapsulation 13
3. Characterization 13

B. Fabrication of Carbon-14 and Technetium-99 Radiographic Sources 14

C. Alpha Source Fabrication Development 14

D. Americium-241 Source 14

E. Strontium-90 Source 15

F. Use of Iron-55 for Determination of Calcium in Ground Meat . . 15

RADIOISOTOPE SOURCE SAFETY TESTING - 08-01-04 17

A. Special Form Prototype Testing 17

B. Testing Sources with Manufactured Leaks 17

C. Surveillance of Regulations and Cask Evaluations 17

D. Source Leak Test Guide 17

E. Sealed Source Testing 17

F. Unsealed Source Testing 17

TECHNOLOGY UTILIZATION - 08-01-05 18

A. Information Center 18

B. Isotopes and Radiation Technology 19

C. Translation 19

RADIOISOTOPE APPLICATIONS DEVELOPMENT 19

BASIC TECHNOLOGY DEVELOPMENT - 08-03-01 19

A. Liquid Scintillation Development 19

1. Alpha Radiation Damage in Phosphors 19

B. Cerenkov Counting 19

Page

SYSTEMS ENGINEERING APPLICATIONS - 08-03-02 19

A. Oceanographic Systems Study 19

B. National Security 22

RADIATION PROCESSING APPLICATIONS DEVELOPMENT 22

ORGANIC SYNTHESIS WITH ISOTOPIC SOURCES - 08-04-01 22

A. Straight Chain Fatty Acids 22

RADIOISOTOPE SALES 23

RADIOISOTOPE PRODUCTION 25

CESIUM-137 PROCESSING 25

STRONTIUM-90 PROCESSING 25

GENERAL OPERATIONS 25

A. Decontamination 25

B. Solid Waste Disposal 26

C. Miscellaneous Operation 26

MAINTENANCE 27

SOURCE FABRICATION 27

A. Cesium-137 27

B. Strontium-90 28

C. Miscellaneous Sources 28

OPERATIONAL SUMMARY 28

PROCESS STATUS 28

MISCELLANEOUS RADIOISOTOPE PROCESSING 28

ADMINISTRATIVE SECTION 29

RADIOISOTOPE PROGRAM (8000) PROGRESS REPORT FOR APRIL 1970

A. F. Rupp

RADIOISOTOPE PRODUCTION AND MATERIALS DEVELOPMENT

NEUTRON PRODUCTS - 08-01-01

A. Biomedical Radioisotopes

1. Thulium-171

Nothing to report.

2. Phosphorus-33

Nothing to report.

3. Potassium-43

The objectives of this project are: to prepare potassium-43 by the $^{43}Ca(n,p)^{43}K$ reaction, using isotopically enriched ^{43}CaO targets, in quantities sufficient for medical and biological experiments; to define a method for separating potassium-43 from the target in a purity suitable for medical use; and to establish cooperative programs with medical institutions interested in evaluating its usefulness.

Potassium-42 has been used, primarily in animals, to locate tumors, to tag red blood cells, and to study blood flow, but it has very limited use in humans because of its high beta energy (3.53 MeV), its high-energy (1.52 MeV) gamma ray, and its relatively short half-life (12.4 hr). Potassium-43, with a half-life of 22.4 hr and gamma-ray emissions of 0.373 and 0.617 MeV, is more suitable for metabolic and clinical studies, because the lower dose rate would permit multiple doses. It has been suggested as a possible tool for studying blood flow through the heart and for diagnosing myocardial infarctions or immune rejection of transplanted organs. It has also proved capable of diffusing through a kidney with greatly reduced renal function, providing a good image of this organ.

A target of 89.3 mg of enriched (approximately 62%) ^{43}CaO was irradiated for 65 hr in a fast neutron flux of approximately 10^{15} n/cm^2.sec. The potassium-43 product consisted of 9.7 mCi, which was shipped to Johns Hopkins and University of Mississippi under medical cooperative programs. The ion exchange was carried out at approximately 80°C using Bio-Rad AG 50W-X8 resin (200-400 mesh) with pneumatic pressure providing a flow rate of approximately 3 ml/min or 8 ml/min.cm^2. Elution was accomplished with 100 ml of 0.2 N HCl, followed by 0.5 N HCl. The eluate was collected in fractions to study the behavior of the column. Much better banding of the potassium-43 was observed with the 200-400 mesh resin than with the 50-100 mesh resin, with 90% of potassium-43 eluting between 175 and 190 ml (56-61 column volumes).

A sample of the target dissolver solution was assayed and the observed activities produced in the target (corrected to discharge) are shown in Table 1.

Table 1. Activities Observed in Calcium-43 Target at Discharge

Isotope	Activity (mCi)	Half-Life	Isotope	Activity (mCi)	Half-Life
Potassium-43	21.3	22.4 h	Platinum-197	2.55	20 h
Potassium-42	4.9	12.4 h	Platinum-195m	0.23	4.1 d
Sodium-24	1.7	15 h	Gold-199	1.39	3.15 d
Iridium-192	2.3	74 d	Manganese-56	13.3	2.58 h
Iridium-194	48	19.4 h	Lanthanum-140	0.81	40.3 h
Scandium-46	3.6	84 d	Strontium-87m	24.6	2.8 h
Calcium-47	0.29	4.54 d			

For an assumed thermal neutron flux of approximately 2×10^{15} n/cm^2.sec, the observed activities imply the following target contaminants:

Contaminant	Amount (wt %)
Iridium	0.005
Platinum	0.12
Strontium	0.8
Manganese	0.003

The platinum, gold, and iridium activities arise from platinum introduced into the target when it is calcined at 1000°C in a platinum crucible. The iridium is selectively leached, as indicated by its greater abundance relative to platinum in the CaO than in the 99.9% platinum crucible. Other contaminant levels are consistent with a previous spark-source mass-spectrographic analysis of a sample of recovered calcium target. All of these contaminating elements are completely separated from the potassium by the ion-exchange process, with the exception of traces of iridium (containing iridium-192) that behave apparently as a colloid in the ion-exchange process. The yield of potassium-43 indicates greater than 90% process recovery, after making allowance for decay and an estimated 25% loss due to sampling.

Work in May will continue on analysis of the beta spectrum and decay characteristics of potassium-43 and on efforts to increase the size of the target processed.

4. Ruthenium-97

Ruthenium-97 (2.9 days) decays by electron capture and emits principal gamma rays of 215 keV (91%) and 325 keV (11%) and higher energy gammas of less than 1% abundance to technetium-97 (2.6×10^6 years). The gamma transitions have low conversion coefficients, and their energy and abundance, coupled with the convenient half-life, make this radionuclide promising for scanning applications.

The purposes of this study are to develop the methods for preparing and processing ruthenium-97, derive the production parameters required to establish costs, and characterize the product. An adjunct to these objectives is the establishment of a cooperative program with the Upstate Medical Center of the State University of New York in which the material produced is supplied for evaluation of the biological applications.

Ruthenium-97 can be prepared by the $^{96}Ru(n,\gamma)^{97}Ru$ reaction. A 4.9-mg target of enriched ruthenium-96 (94.88%) metal was irradiated about 12 days in a thermal neutron flux of approximately 2×10^{15} n/cm^2.sec. The metal target was dissolved in basic NaOCl, the solution was then acidified, and RuO_4 was extracted into CCl_4 leaving the technetium-96 produced by the (n,p) reaction in the aqueous phase. The organic phase was separated from the aqueous phase, and the ruthenium was reduced and precipitated as the dioxide by adding alcohol. The precipitate was centrifuged and the CCl_4 was removed; then the RuO_2 was dissolved in HCl. The final product was free of technetium-96 and had much less solids and acid concentration than the previous product.[1] The only radiocontaminant observed was 39.5-day ruthenium-103, which was approximately 3% of the activity. A sample of approximately 22 mCi was shipped to the Upstate Medical Center of the State University of New York under our medical cooperative program. A paper reporting preliminary medical evaluations of ruthenium-97 has been accepted for presentation at the Washington national meeting of the Society of Nuclear Medicine in July.

B. Research Radioisotopes

1. Lanthanum-137

Nothing to report.

C. Isotopic Power

1. Thulium-170

Nothing to report.

---

[1]A. F. Rupp, Radioisotope Program (8000) Progress Report for February 1970, ORNL-TM-2910, Oak Ridge National Laboratory.

D. Miscellaneous

1. HFIR Target Testing

Three hydraulic tube rabbits were tested in April and none were rejected. Since Alcoa is no longer able to supply finned tubing for rabbits and irradiation capsules for the removable beryllium reflector position, a delay was experienced in finding bidders to supply this extruded tubing; however, an order has now been placed to replenish our supply.

E. Supporting Technology

1. Radioisotope Characterization

Values of nuclear parameters such as half-lives and radiation energies and intensities are important in most applications of radioisotopes. In interviews about needs for standard materials (below), the need for standard information often becomes apparent. The lack of a single national authority with competently evaluated and up-to-date data is a handicap and requires that people needing such data constantly survey the frequently appearing compilations as well as the research papers. Most radioisotope users don't have time to do this nor do many have the specialized knowledge to interpret what they find. The Isotope User's Guide is welcomed by substantial numbers of these workers, when they learn of its existence. They report that it contains most of the information they need, and in a form they can understand.

2. Radioisotope Special Analysis and Quality Control

Personal interviews with producers and users of radioactivity standards have continued, in accordance with the plan for the survey of such standards being conducted for the National Research Council. Recent contacts included state health departments in the Carolinas and Georgia, Savannah River Laboratory and Plant, North Carolina State University, University of Georgia, Georgia Institute of Technology, and Emory University. The interviews usually result in exchange of information of mutual benefit. Many users of standards express surprise that there are no controls over their production - no agency tests or certifies them - (except those standards produced by the National Bureau of Standards itself). Essentially, each supplier has his own "microcurie"; the situtation is analogous to that which would exist if each grocery had its own "pound" unit, or each service station its "gallon."

In the local quality control program, standards are frequently obtained from reputable suppliers and submitted as "unknowns" to the control laboratory and the results compared with the suppliers' certifications. The purpose is triple: to confirm local calibrations, to evaluate suppliers' calibrations, and to anticipate users' inquiries about assay, which may involve standards obtained from the same suppliers. Two standards (krypton-85 and chlorine-36) were received from the National Bureau of Standards (NBS); our value on krypton-85 was 1.7% higher than the NBS value, which was certified to 6%. On chlorine-36 our value was 0.8% higher than

the NBS one, which was certified to 2%. Standards of sulfur-35 were obtained from three commercial suppliers. The efficiencies for the liquid-scintillation technique were 62.0, 66.3, and 69.2%, compared with our established value of 62.6%. Although not particularly satisfactory, the results agree with the average value within the suppliers' stated accuracies of 5 to 10%.

CYCLOTRON PRODUCTS - 08-01-02

A. Biomedical Radioisotopes

1. Rubidium-83

Nothing to report.

2. Rubidium-84

Nothing to report.

3. Indium-111

The objectives of this program are twofold: (1) to elucidate, define and optimize pertinent production parameters (cyclotron target material, cyclotron beam energy and current conditions, adverse side reactions leading to undesirable isotopic impurities, target processing and product purification procedures, and target recovery, if necessary) and (2) to make sufficient material available to cooperative participants for their evaluation of indium-111 as a diagnostic radionuclide in medicine. Such applications would include spinal-cerebral cisternography, aerosol lung studies, delayed brain scanning, visualization of the lymphatic system, metabolic studies of indium-labeled macroaggregates and colloids, and possible applications for tumor localizations. Indium-111 has both a favorable decay scheme [gamma emissions of 173 keV (89%) and 247 keV (94%)] ideally suited for external detection and an optimal half-life (2.81 days) for labeling and distribution studies which must be carried out over 24 hr or longer. The use of indium in such lengthy studies is currently impossible with the indium-113m (1.73 hr) isotope now in general use.

Three indium-111 development runs were processed and shipped to gain additional operating experience on the HBr-isopropyl ether purification procedure[2] and to make available sufficient quantities of this isotope to our medical cooperative participants for their application and evaluation. Nine shipments, totaling approximately 405 mCi at time of shipment, were supplied to cooperative participants. All pertinent production and processing parameters {e.g., thick target production rate, cyclotron yield, chemical purity [Cd(II) and Fe(III) contamination] and target recovery} were consistent with previous operating experience. No new target design work was pursued during April.

---

[2]A. F. Rupp, Radioisotope Program (8000) Progress Report for March 1970, ORNL-TM-2965, Oak Ridge National Laboratory, p. 7.

The major effort on this project for the next few months will be to accumulate additional operating experience and to petition the USAEC for permission to routinely produce this radionuclide as an experimental product for development and evaluation. All of the cooperative participants who have used this isotope are very enthusiastic about its performance as a diagnostic agent and must be assured a dependable supply to justify more extensive clinical research. Since the cyclotron production and chemical processing development for the production of indium-111 via the $^{111}Cd(p,n)^{111}In$ reaction are rapidly drawing to a conclusion, and since the development of other possible production paths [e.g., $^{112}Cd(p,2n)^{111}In$ and $^{112}Sn(p,2n)^{111}Sb \xrightarrow{\beta^+,\ EC} {}^{111}Sn \xrightarrow{\beta^+,\ EC} {}^{111}In$] cannot guarantee to meet the apparent growing needs of the nuclear medical community (as exemplified by interest expressed at recent technical meetings), production of this radionuclide as an experimental product concurrent with additional development work on alternative production paths would seem to be the optimal solution. Development work on alternative production paths will be deferred until adequate operating experience is accumulated on the present production method. Preparation of a topical report on production via the $^{111}Cd(p,n)^{111}In$ reaction is currently planned to begin in either late May or early June.

4. Gallium-67

The objectives of this program are to determine the optimal target configuration for gallium-67 (78 hr) production in acceptable purity and quantity and to provide gallium-67 for clinical applications research and development. Interest in this isotope has been spurred by evidence, obtained by the Medical Division of Oak Ridge Associated Universities (ORAU), of a high uptake of carrier-free gallium-67 by lymphoid tumors in both animals and humans. This interesting discovery was made during the evaluation of gallium-67 as a bone-scanning agent for a patient with Hodgkin's disease and has since been successfully extended to a clinical study of several types of malignant neoplasms. Additional animal studies have been performed by the ORAU group indicating that it is the viable rather than necrotic tumor cells in mice and rats that are mainly responsible for uptake of gallium-67. Autoradiographic studies of rat tumors indicate it is chiefly located in tumor cytoplasm. Their results suggest that gallium-67, with its remarkable ability to concentrate in living malignant cells, may be useful for both clinical diagnosis and in studies of the nature of malignant change.

Gallium-67 decays by electron capture with the emission of four main gamma rays of 93, 184, 296, and 388 keV with intensities of 40, 23, 20, and 8%, respectively. Carrier-free gallium-67 is produced by the $^{68}Zn(p,2n)^{67}Ga$ reaction by bombarding natural, high purity zinc tubing targets (0.375-in. OD by 0.020-in. wall thickness) with 22-MeV protons in the ORNL 86-Inch Cyclotron. Numerous irradiations using this target configuration have been performed and analyzed to yield the following production parameters: thick target production rate = 450 ± 32 mCi/mA-hr, average beam current ≈ 315 μA, and average cyclotron yield ≈ 140 mCi/hr. This target configuration has been irradiated at a beam current as high as 325 μA for approximately 1.3 hr without failure, but is routinely irradiated at 315 μA for extended irradiations (≥3 hr) without difficulty. Irradiation of natural zinc also produces appreciable amounts of gallium-66 (9.5 hr) that must be allowed to decay before human use.

Two gallium-67 preparations were made and shipped to ORAU during this period, and three smaller orders were filled for clinicians interested in evaluating the potential of this radionuclide.

In order to improve the gallium-67 product chemical purity and reduce chemical processing time, a new chemical separation and purification procedure has been devised and is currently being tested. The new procedure, similar in chemistry to the process used for indium-111 purification, is based on an HCl-isopropyl ether extraction. Isopropyl ether is a highly specific extractant for both Ga(III) and In(III) from the appropriate mineral acid solution. The specificity of isopropyl ether for Ga(III) precludes the need for the anion exchange chromatography used to increase the decontamination factor for zinc in the previous methylisobutyl ketone procedure.[3] Titanous chloride solution must be used to reduce Fe(III) to the Fe(II) state or Fe(III) will follow the Ga(III) chemistry and contaminate the product extensively. This new procedure is rapid, requiring ≤ 4 hr from time of target dissolution to final filtration of product compared with approximately 12 hr required for the methylisobutyl ketone procedure, and yields a superior product. Chemical spot tests for Zn(II) and Fe(III) indicate less than 20 and 5 μg/ml, respectively. Feedback from ORAU indicated that they could detect no physiological difference between this product and that prepared by the methylisobutyl ketone process. This process will be tested further during May.

5. Neodymium-140

Nothing to report.

FISSION PRODUCTS - 08-01-03

A. Krypton-85 Enrichment

Depleted ends were removed from columns A, AB, and B (Fig. 1), and the end sections were refilled with normal feed to increase the curie loading of these units. The present status of the six cascades is shown below. The count rate indicates the level of enrichment.

Unit	Activity in Unit (Ci)	Time Since Last Product Removal (days)	Count Rate in Product Section (counts/min) March 1970	April 1970
A	1070	155	4300	4200
AB	994	35	3600	6500
B	849	35	2750	5000
C	1044	125	3900	6000
CD	1613	36	5550	7500
D	1186	73	7300	8500

[3] H. B. Hupf and J. E. Beaver, Cyclotron Production of Carrier-Free Gallium-67, Intern. J. Appl. Radiation Isotopes 21: 75 (1970).

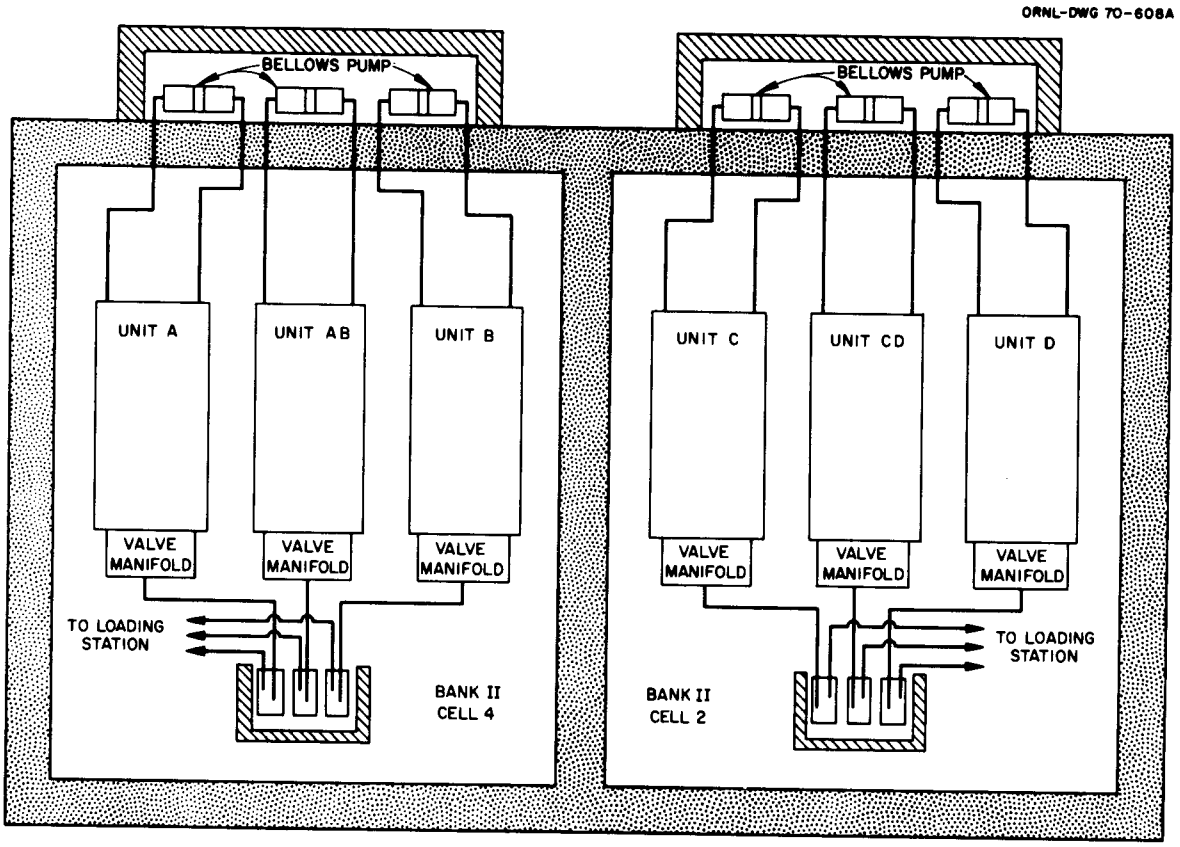

Fig. 1. Schematic Arrangement of Krypton-85 Columns.

Column A still does not appear to be operating properly. The bellows pump and all available parts of the system have been checked and appear to be operating properly. There might be an obstruction in one of the intercolumn lines, and to check this it will be necessary to remove all krypton from unit A.

B. Cesium-137 Process and Product Technology

1. Fission Product Process Study

The purpose of this task is to develop and improve ^{137}Cs source forms and to characterize the source forms for operational and safety requirements.

The objective of the current study is to find a means of eliminating the solid-solid phase transition which occurs at 469°C with an accompanying volume increase.

Samples of various CsCl-KCl mixtures (5, 50, and 95 mole % KCl) have been analyzed by the method of flame photometry. According to the results, mixtures blended for 5 and 10 min are fairly homogeneous (see ref. 4 for the mixing technique used). The deviation of the compositions of individual samples from the mean value ranged from 0 to 3.5% (based on the cesium analysis), which compares favorably with an estimated experimental error of approximately 2%.

Additional differential thermal analysis (DTA) thermograms were obtained for two CsCl-KCl mixtures having very low concentrations of KCl (0.49 wt % and 0.50 wt % KCl). Characteristic transition temperatures determined from the thermograms are summarized in Table 2.

Table 2. Characteristics of DTA Thermograms for CsCl-KCl Mixtures[a] with Very Low KCl Content

KCl Content (wt %)	Transition Peak Temperature[b] (°C)		
	Solid-Solid Transition[c]	Melting	Freezing
0[d]	469	640	636
0.49	465	643	639
0.50	463	640	633

[a]Mixtures that have been previously molten.
[b]Average value.
[c]On heating.
[d]From thermogram for pure CsCl.

As illustrated in Table 2, the solid phase transformation is observed for both mixtures; however, the peak area for the 0.50 wt % KCl-CsCl mixture was much smaller than that for the 0.49 wt % KCl-CsCl mixture. Since the peak area is closely related to the heat of transformation, this phenomenon implies that the solid phase transformation for the former mixture is much less "energetic" than the latter. An estimate from the peak area indicates that the solid phase transformation would probably begin to disappear when the KCl content is increased slightly above 0.5 wt %.

Some difficulties have been experienced with the DTA apparatus in the high temperature range (greater than 700°C) when the intermediate temperature DTA cell (rated at ambient to 850°C) was used. In this temperature range, the instrument noise becomes quite noticeable and the rate of increase in the sample temperature slows down considerably. We are correcting this situation.

Studies on the phase behavior of the CsCl-KCl system will continue. Major efforts will be directed toward correction of the difficulties with the DTA unit in the high temperature range. Further refinement in the DTA thermograms will be made for the CsCl-KCl mixtures including those of intermediate compositions.

A survey of the current ^{137}CsCl market has been initiated as a part of the process economics studies to update and analyze the market data. The period of survey covered FY 1964 through FY 1969. Pertinent data were obtained from the following sources at ORNL:

---

[4]A. F. Rupp, ORNL-TM-2965, p. 11.

(a) Lists of AEC Radioisotope Customers - Isotopes Information Center

(b) Lists of distribution to individual customers (computer printout) - SS Accountability

(c) Cost schedule and methods of shipping - FPDL and Traffic Department

Preliminary results of calculations listed in Table 3 show that approximately 93% of the $^{137}CsCl$ products has been distributed to the eastern United States (including those shipped to the export points) over the past 6 years. About 5% of the total distribution accounts for the customers in the western section of the country, while less than 2% has been shipped to Canada and Mexico.

The $^{137}CsCl$ market study will continue with an emphasis on the calculation and comparison of the transportation costs from different originating points.

Table 3. Distribution of $^{137}CsCl$ Products, FY 1964 through FY 1969

Location	Number of Customers	Cumulative Amount Shipped (Ci)	% of Total Shipments
	Domestic[a]		
East	33	1,449,541	58.60
West	9	126,171	5.10
	Foreign		
Eastern Export Points[b]	16	854,938	34.56
Canada	2	40,964	1.66
Mexico	2	2,051	0.08
Total	62	2,473,665	100.00

[a]With Mississippi River as the dividing line.
[b]Includes shipments to Japanese agents in New York.

2. Cesium Chloride Slab Sources

Nothing to report.

C. Iodine-132

Because the uptake of iodine by the thyroid gland reaches half of its maximum value in 6 hr - a period during which 80% of the administered iodine-132 would have decayed - iodine-132 has only a diagnostic value in nuclear medicine. Indeed because of the short half-life (2.38 hr), iodine-132 is often substituted for 8.05-day iodine-131 in diagnostic tests, thus reducing the radiation dose by a factor of 10 to 100.

Despite the fact that iodine-132 has been known almost as long as nuclear fission has been known, it was not until Brookhaven National Laboratory made available large amounts of high-purity, high-specific activity iodine-132 through the utilization of a ^{132}Te-^{132}I generator system that its potential was realized and exploited. Work on the decay scheme since that time cleared up a number of uncertainties and established a decay scheme with 35 gamma rays placed.

With the development of high resolution lithium-drifted germanium detectors [Ge(Li)], a reinvestigation of the iodine-132 decay scheme was in order. A cooperative program with Vanderbilt University, Aerospace Research Laboratories at Wright-Patterson Air Force Base, Louisiana State University, and Furman University was established for this purpose. The gamma-ray spectrum from the decay of iodine-132 was measured with small- and large-volume high resolution Ge(Li) detectors. Selected regions of the conversion electron spectrum were measured with an iron double-focusing spectrometer. Two-parameter, 4096 x 4096 gamma-gamma coincidence measurements were carried out to establish the energy levels. The number of gamma rays observed increased from the 35 observed in 1965 to 116. As a result a more complete decay, as shown in Fig. 2, was proposed. In addition new conversion-electron and gamma-ray intensities were established. The results of this work were published in April in two articles[5,6] in The Physical Review.

Earlier work in this program includes the preparation and study of the decay of 6.58-day cesium-132 produced in the ORNL 86-Inch Cyclotron. Iodine-132 decays by β^- to xenon-132, but cesium-132 decays predominantly by β^+ and electron capture to xenon-132. The work in the cesium-132 study was used to corroborate the existence of certain high-energy levels in xenon-132. The details of the work were reported earlier[7] and have been published.[8] In addition a review of the properties, uses, and methods of preparation of iodine-132 has been prepared[9] as part of the Isotopes Information Center series of reviews.

---

[5]H. K. Carter, J. H. Hamilton, J. C. Manthuruthil, S. R. Amtey, J. J. Pinajian, and E. F. Zganjar, High-Resolution Electron and Gamma-Ray Studies and Conversion-Coefficient Measurements in ^{132}Xe, Phys. Rev. C1: 649-65 (1970).

[6]J. H. Hamilton, H. K. Carter, and J. J. Pinajian, Gamma-Gamma Coincidence Measurements and the Level Structure of ^{132}Xe, Phys. Rev. C1: 666-83 (1970).

[7]A. F. Rupp, IDC Newsletter for July 1968, ORNL CF-68-8-14, Oak Ridge National Laboratory.

[8]H. K. Carter, J. H. Hamilton, and J. J. Pinajian, Properties of Levels in ^{132}Ba and ^{132}Xe Populated by ^{132}Cs, Nucl. Phys. A115: 417-20 (1968).

[9]Martha Gerrard, John J. Pinajian, and P. S. Baker, Iodine-132: Review of Properties, Uses, and Methods of Preparation, ORNL-IIC-4 (January 1969).

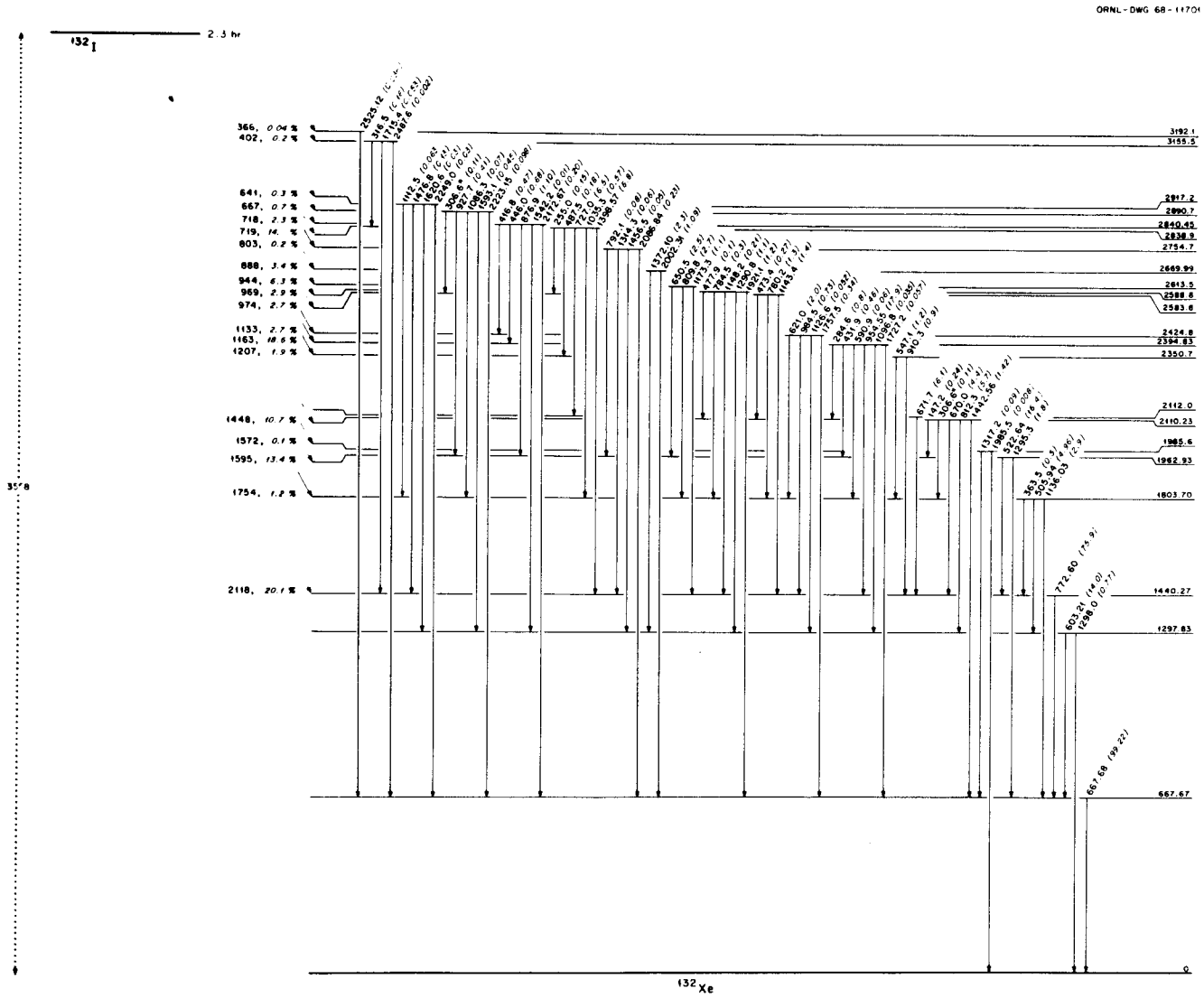

Fig. 2. Iodine-132 Decay Scheme.

Although the decay scheme work appears to be complete, additional study of the intensities of the high-energy gamma rays is required to resolve a conflict between recent French work[10,11] and this work and that of Henck.[12]

RADIATION SOURCE DEVELOPMENT - 08-01-04

A. Strontium-90 Silicate Sources

1. Matrix Studies

2. Encapsulation

Nothing to report.

3. Characterization

Procedures for an experimental program have been written for the characterization studies of strontium silicate. These include the solubility of the strontium silicate minibeads and matrix in various acids and bases, the compatibility of molten aluminum and minibeads, thermal conductivity of matrix material and strontium silicate, and minibead attrition in gases and liquids in motion.

Development plans include the substitution of graphic carbon for aluminum as a matrix in the source capsule. The advantage of increased resistance to chemical attack and high-temperature corrosion of the capsule interior and reduced self-absorption of the beta particles make this possibility quite attractive. Two promising methods are coating the minibeads with pyrolytic carbon and producing the desired source form in a die using a resilient graphite which has recently become commercially available.

Six inactive sources were tested for heat damage. The sources were prepared by encapsulating inactive strontium silicate minibeads in molten aluminum. Two sources were loaded with minibeads coated with graphitic carbon. Three sources, including the two sources with carbon-coated beads, were held at 600°C for approximately 24 hr in a helium atmosphere. The other three sources were heated to 700°C, 800°C, and 900°C for 24 hr. Visual inspection revealed little damage. Completion of this work will require the samples to be polished, etched, and photographed under high magnification. To complete this work active sources using full strength strontium-90 silicate minibeads must be fabricated and tested.

---

[10] G. Ardisson and F. X. Petit, Compt. Rend. 263 C: 1408 (1966).

[11] C. Ythier, G. Ardisson, and M. Lefort, Compt. Rend. 264 B: 84-6 (1967); see ORNL-tr-1779, Study of the ^{132}I High-Energy Gamma Radiation with a Pair Spectrometer, translated by John J. Pinajian and Martha Gerrard.

[12] R. Henck, L. Stab, P. Siffert, and A. Cocke, Nucl. Phys. A93: 597-608 (1967); see ORNL-tr-1683, Experimental Study of the Excited Levels of ^{132}Xe, translated by Martha Gerrard and John J. Pinajian.

B. Fabrication of Carbon-14 and Technetium-99 Radiographic Sources

Because of the low-energy beta emitted by carbon-14, this radionuclide is useful in the measurement of gas density. The development of an aircraft altimeter requires a high output carbon-14 source with a minimum of bremsstrahlung activity.

Several sources were fabricated by reacting molybdenum metal with elemental carbon-14 to form molybdenum carbide. Development work to obtain a highly stable high-output carbon-14 source was carried out. Attempts to produce an adherent carbon coating on a substrate by reacting elemental carbon-14 with molybdenum at a temperature of 1800°C was made. Although 10 mCi of carbon-14 was used in each source fabrication, the output was less than 0.2 mCi, which is about 20% of the output required for an altimeter device. The high temperature required for the reaction also resulted in diffusion of the carbide formed on the surface throughout the thickness of the molybdenum disk. This diffusion into the disk resulted in self-absorption and reduced the output; therefore, this fabrication technique was abandoned and a technique of encapsulating the elemental carbon with a 0.1-mil nickel foil window was utilized. The carbon was mixed with a bonding agent (1% urethane by weight) and pressed onto a 1-mil aluminum foil at a pressure of approximately 10,000 psi. The carbon wafer produced was placed onto a 1/8-in.-thick aluminum disk and covered with a 0.1-mil-thick nickel foil. This assembly was then pressed to bond the window to the carbon and the carbon to the aluminum disk. The output was approximately 1 mCi. This source provides sufficient beta output for demonstration of an altimeter. Additional development is needed to prepare highly stable carbide sources that have outputs equal to the source described above.

C. Alpha Source Fabrication Development

Nothing to report.

D. Americium-241 Source

The 30- and 60-keV gammas produced by americium-241 are useful in exciting secondary X rays in various elements. Development of a device to identify titanium scrap from scrap mixed with aluminum and magnesium required special source geometry, output, and radiation spectra quality. A special source was fabricated to meet these requirements.

The arrangement of a source for production of secondary X rays in samples to be bombarded by the radiation from the source places severe restrictions on the geometry and materials used in the fabrication of these sources. A source was designed using an aluminum capsule in which 30 mCi of americium-241 was placed in a 1/8-in. by 1/8-in. channel formed in a 2-in.-dia by 20-mil-thick aluminum disk with a 1/2-in. hole in the center. The americium was distributed in the groove as a nearly neutral chloride solution and dried at 400°C; then it was covered with colloidal graphite to increase the adherence of the deposit in the channel. A cover disk was placed over the disk containing americium-241 and the edges welded to form a sealed source.

The source was positioned between the detector and samples to be examined in such a manner that the secondary X ray produced in the sample passed through the center hole of the source into the germanium detector. The device is now in commercial operation.

E. Strontium-90 Source

The Health Physics Division at ORNL needs two beta sources containing strontium-90. One source would contain 12 Ci of strontium and the other would contain 1.2 Ci of strontium. Such sources should emit mostly beta radiation and produce a homogeneous beta flux at distances of approximately 4 in. away from the surface. They will be used to study the effects of beta radiation on insects and plants.

To reduce the energy of the bremsstrahlung radiation, the strontium-90 is to be absorbed as a dilute acid solution into the matrix of a 14-in.-dia by 1/16-in.-thick graphite disk. Evaporation of the water and acid leaves the strontium nitrate or chloride inside the graphite. The outer surface pores of the graphite were sealed by painting a solution of organic ammonium silicate solution over the surface and heating to decompose and leave SiO_2.

The graphite source fits inside the flat 1/4-in.-thick circular aluminum source holder. The source holder window, which is 0.005-in. aluminum welded to an aluminum ring, covers the graphite piece and is press-fitted around the 1/4-in.-thick circular plate, which contains the graphite and strontium-90. The window is epoxy sealed during the press-fitting assembly at points that are shielded with at least 1/4 in. of aluminum.

The techniques for handling such a source in the hot cell are being checked by fabricating a source containing no radioactivity. Fabrication of the source will be completed during May.

F. Use of Iron-55 for Determination of Calcium in Ground Meat

The amount of calcium normally contained in meat varies from 2 to 20 mg per g of meat. Meat products can contain a certain amount of ground bone, but too much ground bone in such meat products as chicken, beef, or pork is considered not good for human consumption. This is particularly true for baby food. An accurate quick method to determine calcium or bone content in such meat products is needed.

The method used to measure the calcium content of ground meat is absorption of the radiation from iron-55 (5.9-keV Mn X ray) in the meat sample to produce the characteristic 3.7-keV X ray of calcium. The primary radiation is collimated and directed upward toward the meat sample. A portion of the calcium X ray, which is emitted downward from the sample, is measured by the gamma spectrometer. A lithium-drifted silicon detector with high resolution (full width at 1/2 maximum) of approximately 300 eV and a 400-channel gamma spectrometer are used for the measurement of this low-energy X ray.

To determine the sensitivity of this analytical technique, egg shells were ground into a very fine powder, mixed with ground chicken meat, and blended well. Samples of the meat, which presented the same area to the iron-55 radiation, were placed in the sample holder. The thickness of the sample exceeded the saturation thickness for the characteristic calcium X ray and in this manner the sample size was fixed.

The results of the study are shown in Fig. 3. The quantity of calcium X ray produced should vary linearly with the quantity of calcium contained in the sample. The effect of the matrix through which the calcium X ray must penetrate is minimized because the X ray from iron-55 and the X ray from calcium penetrate only thin layers of the sample.

This graph (Fig. 3) will be standardized with meat samples that have been analyzed gravimetrically for calcium content. The Department of Agriculture, Beltsville, Maryland, will supply the samples.

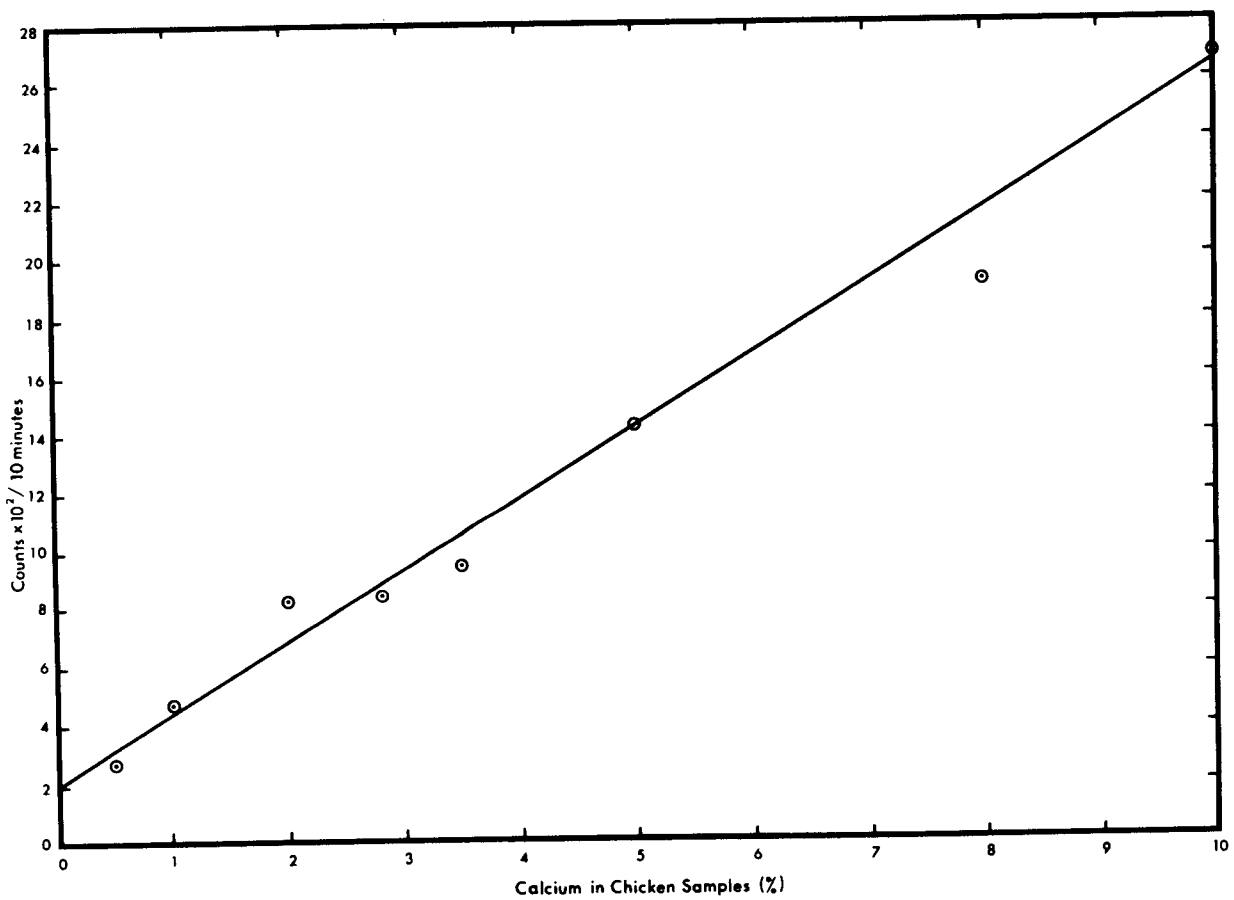

Fig. 3. Excitation of the 3.69-keV $K_{\alpha 1}$ X Ray in Calcium with Iron-55 5.9-keV Mn X Ray to Determine Calcium Content of Chicken Meat Samples.

RADIOISOTOPE SOURCE SAFETY TESTING - 08-01-04

A. Special Form Prototype Testing

A 400-Ci $^{137}CsCl$ source, doubly encapsulated in type 316L stainless steel, was judged to meet the requirements for USAEC "special form" material on the basis of tests performed on sources of similar design. The source had overall dimensions of 5.25 in. long by 0.625 in. dia. Both inner and outer capsules had 0.035-in.-thick walls and 0.25-in.-thick end caps. The inner capsule contained a stainless steel spacer designed to position the CsCl pellets in the desired locations. The internal volume of the source capsule is 6.9 cm^3 and it contains 16.6 g of $^{137}CsCl$.

B. Testing Sources with Manufactured Leaks

Nothing to report.

C. Surveillance of Regulations and Cask Evaluations

Nothing to report.

D. Source Leak Test Guide

Nothing to report.

E. Sealed Source Testing

Nothing to report.

F. Unsealed Source Testing

Testing of commercial tritium foils used as targets was completed. Tritium losses during a 2-hr period were determined for the nominal 1-Ci/in.^{2} foils at elevated temperatures in a flowing argon atmosphere. The losses are shown below:

Temperature (°C)	% of Initial Activity
100	0.020
150	0.056
200	1.14
300	12.8
400	50.8

Equipment for the evaluation of tritium foils used in gas chromatographs and ^{241}Am foils developed by Battelle Northwest has been assembled. Photometers and thermocouples have been calibrated and test runs are being made.

TECHNOLOGY UTILIZATION - 08-01-05

A. Information Center

The Isotopes Information Center now has 18,500 accessioned items. There is no backlog and the accession rate of 500 per month is expected to continue. Most of the holdings can be retrieved by either computer or Termatrex search, whichever is cheaper for specific cases. During April, 160 IIC publications and reprints were sent out in answer to queries, and 87 requests that required specific answers were filled. Three letters were translated for Isotopes Sales and a document for DID. Editing of a machine translation of a Russian book on radiation-induced mutations, undertaken at the request of the Division of Biology and Medicine, was about half completed. A list of reviews in progress (for answering future queries) is given below:

Title	Author(s)	Status, % Complete
Cement-Polymer Combinations	V. I. Solomatov, translated from Russian and edited by Martha Gerrard, P. S. Baker, and R. E. Greene	At printers
DID Research and Developments - 1969	Isotopes Information Center Staff	90
Indium-113m: Preparation and Uses	Martha Gerrard	10
Flow Measurement	R. H. Lafferty, Jr.	15
Iodine-125	P. S. Baker and Martha Gerrard	25
Isotopic Methods of Examination and Authentication in Art and Archaeology	F. J. Miller, E. V. Sayre, and B. Keisch	95
Oceanography[a]	Isotopes Information Center Staff	90
Patent Review - Process Radiation Development	R. E. Greene, P. S. Baker and Helen Warren	87.5
Potato Sprout Inhibition by Radiation, Part I	F. E. McKinney	75
Radiation vs Glass[b]	D. N. Hess	20
Radioisotopes in the Pharmaceutical Industry	P. S. Baker and Martha Gerrard	5
Radioisotopes in the Steel Industry[c]	Republic Steel Corporation	10
Radioisotopes in X-Ray Fluorescence Analysis	R. H. Lafferty, Jr.	5
Selected Abstracts of World Literature on Production and Industrial Uses of Radioisotopes	Martha Gerrard and P. S. Baker	15
Self-Diffusion in Liquids	F. J. Miller	75
Strontium-90	Roberta Shor, R. H. Lafferty, Jr., and P. S. Baker	90
Technetium-99m: Preparation and Uses	Martha Gerrard and P. S. Baker	30
Radioisotopes in the Textile Industry	F. J. Miller	90
Use of Radioisotopes in Sedimentology	V. Romanovsky, translated and edited by Martha Gerrard	10
Wheat Disinfestation - A Worldwide Review	F. E. McKinney	5
Wood Plastics	R. E. Greene	75
Yttrium-90	Martha Gerrard	10
Permuted Isotopes and Radiation Technology Indexes	Helen Raaen	20
Presowing Irradiation of Seeds	Machine translation of Russian book, edited by Martha Gerrard and P. S. Baker	50

[a]Draft completed; being held at DID.
[b]Indefinite.
[c]Will be in sections; first section now in hand.

B. Isotopes and Radiation Technology

An outline for Isotopes and Radiation Technology 8(2), an issue to be devoted to isotope applications in environmental problems, was submitted to DID for approval.

C. Translation

ORNL-tr-2307 (Russian), Yu. I. Shillinger, V. G. Kachkova, and Z. M. Kamal'denova, Effect of Foods Pasteurized by Gamma Radiation on White Rats, Voprosy Petaniya 26(3): 7208 (1967) (translated by Martha Gerrard).

RADIOISOTOPE APPLICATIONS DEVELOPMENT

BASIC TECHNOLOGY DEVELOPMENT - 08-03-01

A. Liquid Scintillation Development

1. Alpha Radiation Damage in Phosphors

Nothing to report.

B. Cerenkov Counting

Nothing to report.

SYSTEMS ENGINEERING APPLICATIONS - 08-03-02

A. Oceanographic Systems Study

The Radioisotopic Sand Tracing Study (RIST) is a cooperative program involving several government agencies. Its objectives are to develop methods and equipment for measuring the transport of sediment in water as a function of the various forces acting on solid materials in dynamic aqueous systems and to obtain data that can be used in the solution of engineering problems related to maintaining coasts, harbors, and waterways and to controlling pollution.

Data obtained at Point Mugu, California, have been processed and samples of the results are shown in Figs. 4 and 5. Figure 4 is a display of the distribution of gold-198-199-tagged sand from a line injection extending from the beach to a point on the ocean floor approximately 26 ft below. Missing data between track lines were generated by performing a linear interpolation along the x axis (parallel to the shore). The figure shows a definite high rate of transport in the breaker zone area compared with the transport rate at greater water depths. The apparent transport in the area between the breaker zone and dry beach may not be definitive because burial in this area may obscure the distribution of radioactive material. Experiments planned for the next Point Mugu test may provide additional information about this area.

ORNL DWG. 70-4472

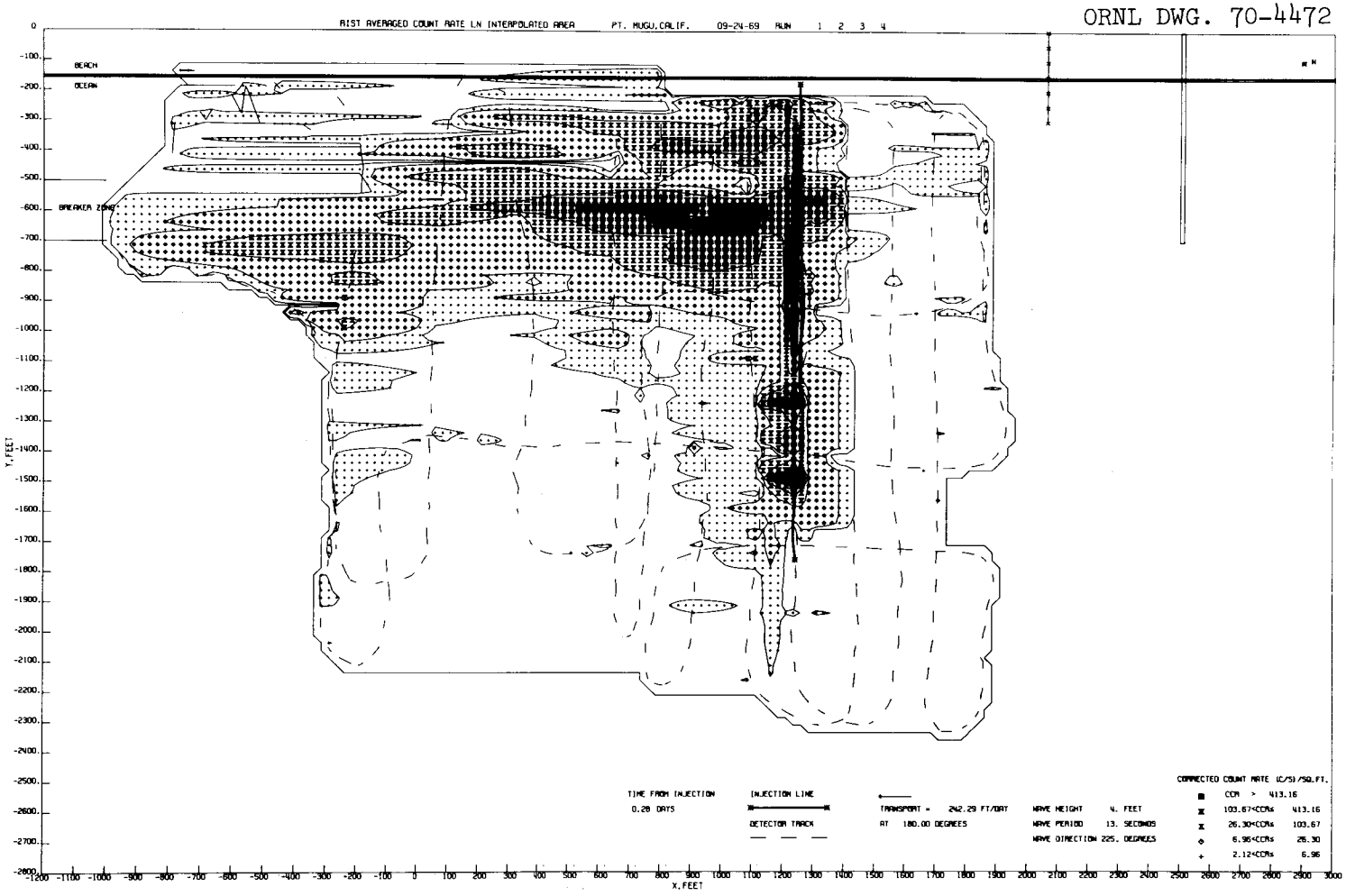

Fig. 4. Distribution of Gold-198-199 Tagged Sand From Line Injection.

ORNL DWG. 70-4471

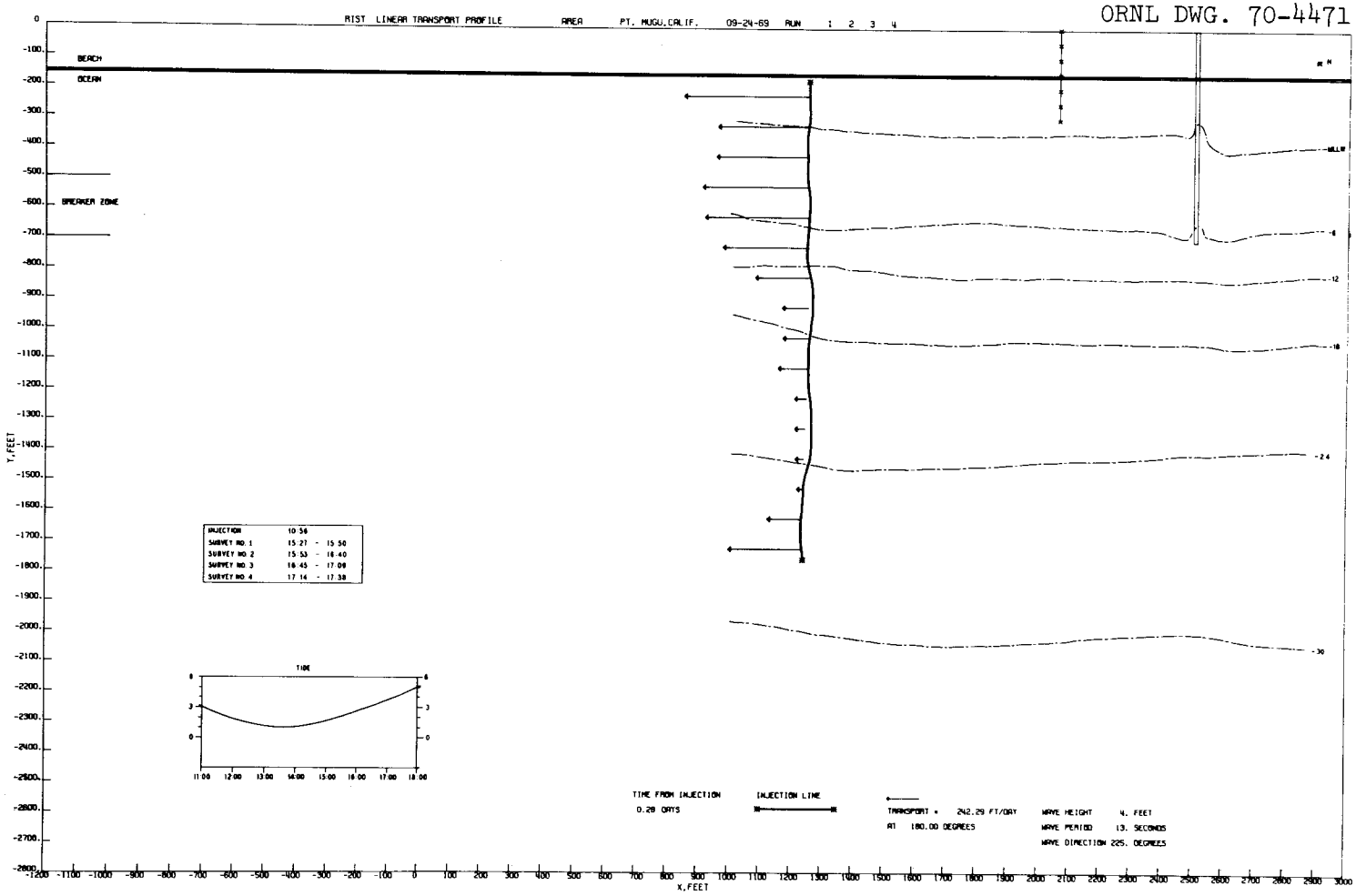

Fig. 5. Linear Transport Rate Parallel to the Beach.

Figure 5 shows the magnitude of the linear transport rate parallel to the beach. Each arrow shown in the figure represents the average rate over a 100-ft section of the ocean bottom in the seaward direction. The tide cycle and the time of each survey is shown because the distribution of tagged material appears to be influenced on a day-to-day basis by the tide. The tide level changes the bottom elevation very rapidly, which results in scouring or buildup of sand. The experimental groin is in the upper righthand corner and is south of the injection line. During the experiment, ocean conditions changed and caused a southward movement toward the groin.

An electromechanical cable has been purchased for the backup detector assembly and is being installed. Initial planning of the experiments to be conducted at Point Mugu in June is nearly complete.

B. National Security

Nothing to report.

RADIATION PROCESSING APPLICATIONS DEVELOPMENT

ORGANIC SYNTHESIS WITH ISOTOPIC SOURCES - 08-04-01

A. Straight Chain Fatty Acids

The gamma radiolytic high pressure oxidation of 2-hexene was completed. Attack of 2-hexene occurred at the double bond as indicated by major products of acetaldehyde, acetic acid, butyraldehyde, and butyric acid; 2-methylpentanal, which appeared in significant amounts, was probably formed by recombination and/or rearrangement of radical fragments. The oxidation products were identified by retention times on gas-liquid chromatography and confirmed by infrared and mass spectroscopy. The yields (wt %) of the oxidation products were calculated from the chromatogram. The G values (molecules formed per 100 eV of energy absorbed in the system) were calculated from these yields.

$$G = (9.64 \times 10^3\ C)/MR$$

where

C = concentration of product in wt % or % conversion

M = molecular weight of product

R = dose in megarads (10^6 rads)

R was calculated from the absorbed dose per unit exposure dose of 2-hexene (0.99 rad/roentgen x time in hours x roentgen/hr). Two-milliliter samples of 2-hexene were pressurized with oxygen to 1500 psi and then exposed to a gamma field (cobalt-60) of 6.8×10^6 roentgens/hr for 1, 2, and 3 hr. Each time exposure of 2-hexene was carried out three times. Table 4 shows the results.

Table 4. Results of Exposure of 2-Hexene Samples to 6.8×10^6 R/hr for 1, 2, and 3 hr

Product Formed	Amount (wt %)[a]			G Value		
	1 hr	2 hr	3 hr	1 hr	2 hr	3 hr
Acetaldehyde	5.7	11.0	15.1	187	180	164
Acetic Acid	1.4	3.4	5.4	33	40	43
Butyraldehyde	6.5	8.4	17.3	127	84	115
Butyric Acid	3.0	5.8	6.3	49	47	34
2-Methylpentanal	1.4	3.4	4.3	19	24	20

[a]Represents the average of three runs.

Smaller amounts of oxidation fragments were present; however, we were unable to confirm their identities other than by comparison of retention on a gas-liquid chromatograph.

The radiolytic oxidation of 2-hexene was undertaken to determine if the double bonds could be oxidized. This work was done in conjunction with our work on the oxidation of tall oil.

RADIOISOTOPE SALES

An order was received from the U. S. Atomic Energy Commission, Las Vegas, for 366,000 Ci of strontium-90 to be fabricated into three heat sources. An inquiry was received from Schwartz Bio-Research for 10 Ci of phosphorus-33. A cancellation of their order for 200,000 Ci of cesium-137 was received from Industrial Reactor Laboratory. Notable shipments made during April include 3,200 Ci of cesium-137 to Atomic Energy of Canada Limited; 1,000 mCi of carbon-14 to Catholic University; 213,100 Ci of cesium-137 to U. S. Army Natick Laboratories; 15,000 Ci of tritium to Radiochemical Centre; and 50,000 Ci of promethium-147 to McDonnell Douglas Astronautics Company (shipment made from Richland, Washington). Other shipments made were 672 μCi of argon-37, 1,445 Ci of carbon-14, 5 mCi of argon-39, 151.564 Ci of xenon-133, 752 Ci of krypton-85, 6,520 Ci of tritium, 40 Ci of enriched krypton-85 (23.47%), and approximately 45 Ci of methyl iodine-131.

A list of outstanding large orders is shown below:

Isotope	Amount, Ci	Customer
Cesium-137	~203,000	Brookhaven National Laboratory
Cesium-137	~174,300	American Nuclear Corporation[a]
Cesium-137	~77,000	Lockheed Georgia Company[a]
Cesium-137	120,000	Radiation Machinery Corporation[a]
Cesium-137	~186,800	Atomic Energy of Canada Limited
Cesium-137	40,000	Radiation Resources, Inc.[a]
Cesium-137	20,000	Radiochemical Centre, England
Cesium-137	200,001	CEA, France
Cesium-137	200,001	Radiation Resources, Inc.
Cesium-137	3,000	Miscellaneous orders
TOTAL	1,224,102	
Strontium-90	~532,000	Isotopes, Inc.[a]
Strontium-90	~105,000	Isotopes, Inc.
Strontium-90	~41,000	Brookhaven National Laboratory
Strontium-90	~556,982	U. S. Navy
Strontium-90	366,000	U. S. Atomic Energy Commission, Las Vegas
Strontium-90	3,000	Miscellaneous orders
TOTAL	1,603,982	
Promethium-147	5,100	Reactor Centrum Nederland
Promethium-147	5,001	Mitsubishi Corporation (Japan)
Promethium-147	100,001	McDonnell Douglas Astronautics Company[b]
TOTAL	110,101	
Tritium	15,000	Radiochemical Centre, England
Cobalt-60	6,200	Puerto Rico Nuclear Center

[a]Activity has been billed in previous fiscal years. Material is now being fabricated into sources or has already been fabricated into sources and is stored for future requests for shipments.

[b]Material is to be shipped from Richland, Washington.

The radioisotope sales proceeds and shipments for the first nine months of FY 1969 and FY 1970 are given in Table 5.

Table 5. Radioisotope Sales and Shipments

Item	7-1-68 thru 3-31-69	7-1-69 thru 3-31-70
Inventory items	$ 622,744	$ 478,828
Major products	71,968	83,570
Radioisotope services	185,710	238,329
Cyclotron irradiations	121,464	99,957
Miscellaneous processed materials	57,995	59,529
Packing and shipping	63,443	56,600
Total Radioisotope Sales	$1,123,324	$1,016,813
Total Radioisotope Shipments	2,099	1,925

Table 6 gives the April 1970 cyclotron irradiations and runs for ORNL and non-ORNL customers.

Table 6. Cyclotron Irradiations and Runs for April 1970

Product	No. of Runs	Time, hr:min Beam	Misc.	Total	Total Charges
ORNL Research Programs					
Cobalt-61	2	3:00	2:00	5:00	$ 485.00
Gallium-67	2	3:15	2:15	5:30	563.12
Indium-111	4	6:35	3:55	10:30	1,070.30
Technetium-99m	1	2:00	:45	2:45	261.25
Total		14:50	8:55	23:45	$ 2,379.67
Non-ORNL Research Programs					
Bismuth-205	1	1:00	1:15	2:15	$ 335.50
Cobalt-57	2	98:00	2:30	100:30	17,487.28[a]
Yttrium-87	3	7:00	3:45	10:45	1,760.30
Total		106.00	7:30	113:30	$19,583.08

[a]Purchased but not shipped.

RADIOISOTOPE PRODUCTION

CESIUM-137 PROCESSING

No processing of cesium-137 was done during April. All completed cesium-137 products were transferred to the source encapsulation facilities.

STRONTIUM-90 PROCESSING

No strontium-90 was processed during April.

GENERAL OPERATIONS

A. Decontamination

The strontium-90 fuel handling cell was stripped of all removable fixtures such as hot-press service lines and decontamination was continued. This cell has been decontaminated enough that shielded entry is possible, but some high radiation areas remain.

Decontamination of the $^{137}CsCl$ processing cell was started by disassembling the calcination furnace. All removable materials, including

the fire-brick insulation, was transferred out of the cell. Furnace components too large for airlock transfer will be decontaminated remotely before the cell is opened.

B. Solid Waste Disposal

The drum waste carrier continued to give excellent results. Of particular note are the lower radiation doses experienced by operating personnel handling this carrier. These doses amount to less than 10% of those received during the handling of equivalent loads of solid waste with the previously used shielded stainless dumpster. Contamination problems with the new carrier have been insignificant.

Studies of compaction of wastes similar to the contaminated solid wastes generated by FPDL operations continued. Two compaction techniques are being used in these tests. In one case the materials are compacted in an open-topped 12-in.-dia by 12-in.-high cylindrical steel container. An 11-in.-dia plunger driven by a hydraulic ram is used to provide the compaction. The second method utilizes a standard 55-gal steel drum and a plunger with a disk-shaped baseplate 1 in. smaller than the inside diameter of the drum. Various weights are attached to the plunger, and the assembly is raised or lowered by a 20-ton crane. This second method could be adapted to FPDL in-cell operations quite readily.

Tests have been made on two types of waste. In Test No. 1, wet cellulose wipes were placed in plastic bags, as during decontamination operations; then the bags were placed in the test container for compaction. Test No. 2 was done with an assortment of waste material that included manipulator boots, reagent bottles, and similar items generated during normal operations. These materials were placed in plastic bags prior to compaction.

The results of the two tests are shown in Fig. 6, which gives compaction ratio (original volume/final volume) versus applied pressure. Two effects shown by these data should be noted:

1. The wet wipes, which are more-or-less homogeneous, demonstrate a lower compaction ratio than the mixed waste which includes considerable free space such as bottles. The compaction ratio would vary with the amount present of such air-containing items.

2. For both types of waste the incremental compaction increase with increasing pressure appears to nearly level off around 20 psi. There is probably no really significant advantage to be gained at pressures between this relatively low value and the point at which true densification of the materials results.

C. Miscellaneous Operations

One shipment of 454 g of $^{244}CmO_2$ in four cans was received. The cans were unloaded and stored in the curium-244 storage well.

High-temperature compatibility tests with strontium-90 and curium-244 fuels continued.

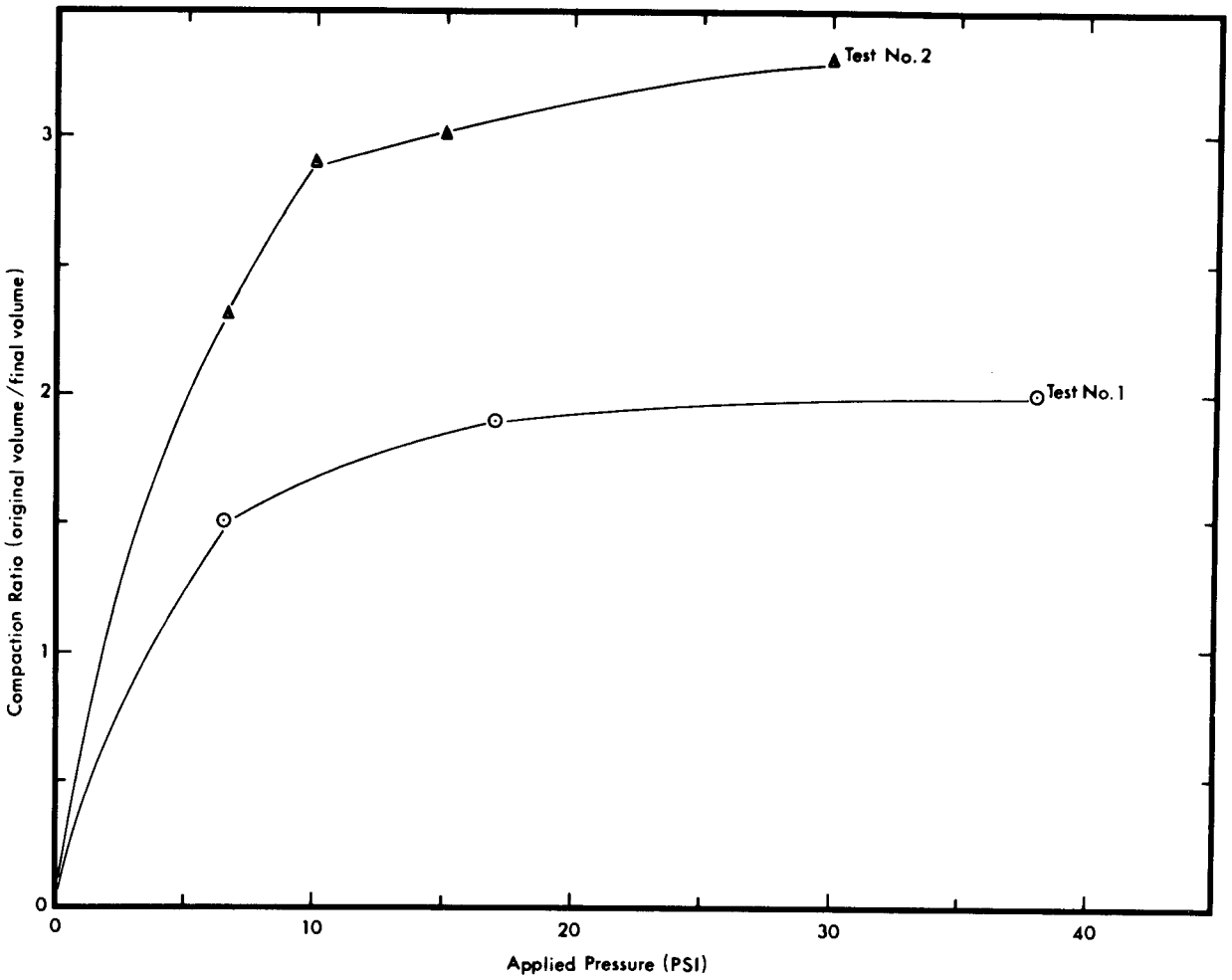

Fig. 6. Compaction Ratio Versus Applied Pressure for Two Compaction Tests.

MAINTENANCE

Installation of the hot off-gas dehumidifier system was completed. New piping and recirculation pumps were installed in the hot off-gas scrubber. The facility hot off-gas system is now in operation via a bypass around the dehumidifier, pending checkout of this new system.

SOURCE FABRICATION

A. Cesium-137

Fabrication of miscellaneous $^{137}CsCl$ sources continued. Of the 39 sources on order, nine were completed to the point of final decontamination; the liners for 14 additional sources were completed; and the fuel pellets for all remaining sources were pressed. A shipment of 213,100 Ci of cesium-137 in 46 sources was made to Lockheed-Georgia. These sources will be loaded into an irradiator for the U. S. Army Natick Laboratories. Bulk $^{137}CsCl$ powder for two large orders was transferred to the source encapsulation facility for canning.

Nothing to report.

C. Miscellaneous Sources

Sources fabricated and shipped during April 1970 include two 9-μCi scandium-46 sources and 154 strontium-90 sources containing a total of 36,000 Ci.

OPERATIONAL SUMMARY

	April 1970		FY 1970	
	Number	Amount (Ci)	Number	Amount (Ci)
Cesium-137				
HAPO shipments received	0	0	0	0
Product batches prepared	0	0	0	0
Sources fabricated	9	8,300	313	361,200
Special form containers	0	0	25	7,700
Strontium-90				
HAPO shipments received	0	0	0	0
Product batches prepared	0	0	16	646,000
Sources fabricated	0	0	0	0
Special form containers	0	0	40	332,900

PROCESS STATUS

Physical Inventory

Item	Cesium-137 (Ci)	Strontium-90 (Ci)
In-process materials[a]	174,000	1,390,000[b]
Products in storage[c]	117,000	1,139,000
Sources in fabrication	279,900	0
Completed sources	167,500	428,100
Total	738,400	2,957,100

[a]Adjusted for expected process yields.
[b]Includes 580,000 Ci of reserved material (SNAP-23).
[c]Includes material in welded shipping cans.

MISCELLANEOUS RADIOISOTOPE PROCESSING

Short-Lived Fission Products		Processed Units		Service Irradiations	
Radioisotope	Total (Ci)	Radioisotope	Total (mCi)	Type	Number
Xenon-133	400	Calcium-47	10.5	Platinum-196	2
Iodine-131	45	Copper-67	19.3	Cr_2O_3	1
Barium-140	0.3			Germanium	1
				Y_2O_3	1
				Uranium-236	1
				Tungsten	1
				Vanadium	1
Total	445.3		29.8		8

In addition to the above, one sample of zinc-67m and one sample of argon-37 were processed for use in development work by other IDC groups.

ADMINISTRATIVE SECTION

Travel by IDC personnel and visitors to the IDC are given in Tables 7 and 8, respectively.

Table 7. Visitors to IDC

Visitor's Affiliation	Purpose of Visit
Committee on Scientific and Technical Information	Making study of U. S. information centers
Science Applications, Inc. La Jolla, California	To learn of Isotopes Information Center services
Smith, Korach, Hayet, Lippack, Haynie, and Associates Miami Beach, Florida	Tour ORNL 86-Inch Cyclotron and discuss air conditioning, ventilation, and cooling water system of cyclotron
Vanderbilt University Nashville, Tennessee	Discuss establishment of a "Users' Group" and the mechanism of funding an on-line mass separator for use on ORIC
Vanderbilt University Nashville, Tennessee	Discuss preparation and correction of final draft of a paper
Furman University Greenville, South Carolina	Discuss and formulate plans for additional experiments in the investigation of the decay of ^{132}I and other short-lived activities

Table 8. Travel by IDC Personnel

Site Visited	Purpose of Visit
Miamisburg, Ohio	Inspect source impact facilities at Mound Laboratory and discuss cobalt-60 sources
Pittsburgh, Pennsylvania	Discuss SNAP-23 with Westinghouse
Smithville, Tennessee	Accompany SNAP generator display
College Park, Maryland	Attend a meeting on Problems of Science in Developing Countries
Washington, D. C.	Attend lectures on problems of physics in developing countries
Atlanta, Georgia	Give talk at Fernbank Science Center

INTERNAL DISTRIBUTION

1. A. L. Allen
2. M. A. Baker
3. P. S. Baker
4. E. E. Beauchamp
5. G. E. Boyd
6-8. T. A. Butler
9. F. N. Case
10. J. A. Cox
11. F. L. Culler
12. W. C. Davis
13. J. S. Drury
14. J. H. Gillette
15. H. R. Gwinn
16. R. F. Hibbs
17. K. E. Jamison
18. Lynda Kern
19. E. H. Kobisk
20. E. Lamb
21. R. E. Leuze
22. J. L. Liverman
23. L. O. Love
24. W. S. Lyon
25. R. E. McHenry
26. F. M. O'Hara
27. W. W. Parkinson
28. J. J. Pinajian
29. M. E. Ramsey
30. S. A. Reynolds
31-32. R. A. Robinson
33. D. A. Ross
34. A. F. Rupp
35. R. W. Schaich
36. K. A. Spainhour
37. M. R. Skidmore
38-39. H. F. Stringfield
40. A. M. Weinberg
41. J. C. White
42-43. Central Research Library
44. Document Reference Section
45-49. Laboratory Records Department
50. Laboratory Records - RC

EXTERNAL DISTRIBUTION

51. G. A. Andrews, ORAU, Medical Division, Oak Ridge, Tennessee
52. Hal Atkins, Brookhaven National Laboratory, Upton, New York
53. D. S. Ballantine, AEC, Washington, D. C.
54-57. R. F. Barker, AEC, Washington, D. C.
58. N. F. Barr, AEC, Washington, D. C.
59. O. M. Bizzell, AEC, Washington, D. C.
60. C. R. Buchanan, AEC, Washington, D. C.
61. R. L. Butenhoff, AEC, Washington, D. C.
62. T. D. Chikalla, PNL, Richland, Washington
63. D. F. Cope, AEC Site Representative, ORNL
64. D. C. Davis, AEC, Oak Ridge, Tennessee
65. J. C. Dempsey, AEC, Washington, D. C.
66. W. K. Eister, AEC, Washington, D. C.
67. E. E. Fowler, AEC, Washington, D. C.
68. J. D. Goldstein, AEC, Washington, D. C.
69. A. Gottschalk, Argonne Cancer Research Hospital, Chicago, Illinois
70. F. D. Haines, AEC, Washington, D. C.
71. J. W. Irvine, MIT (Consultant)
72. J. Lawrence, Lawrence Radiation Laboratory, Berkeley, California
73. J. E. Machurek, AEC, Washington, D. C.
74. J. N. Maddox, AEC, Washington, D. C.
75. J. C. Malaro, AEC, Washington, D. C.
76. W. E. Mott, AEC, Washington, D. C.
77. J. A. Powers, AEC, Washington, D. C.
78. G. J. Rotariu, AEC, Washington, D. C.
79. B. A. Ryan, AEC, Richland, Washington

80. W. D. Sandberg, AEC, Aiken, South Carolina
81. S. J. Seiken, AEC, Washington, D. C.
82-84. J. E. Hansen, PNL, Richland, Washington
85. R. W. Shivers, AEC, Washington, D. C.
86. P. E. Smith, ARHCO, Richland, Washington
87. L. G. Stang, Jr., BNL, New York
88. G. Taplin, University of California, Los Angeles, California
89-94. D. H. Turno, SRL, Aiken, South Carolina
95. A. R. Van Dyken, AEC, Washington, D. C.
96. Laboratory and University Division
97-111. Division of Technical Information Extension