LOCKHEED MARTIN ENERGY RESEARCH LIBRARIES
3 4456 0514206 6

CENTRAL RESEARCH LIBRARY
DOCUMENT COLLECTION

OAK RIDGE NATIONAL LABORATORY
operated by
UNION CARBIDE CORPORATION
NUCLEAR DIVISION
for the
U.S. ATOMIC ENERGY COMMISSION

ORNL-TM-3020

44

RADIOISOTOPE PROGRAM (8000) PROGRESS REPORT FOR MAY 1970

A. F. Rupp

LIBRARY
REFERENCE COPY

NOTICE This document contains information of a preliminary nature and was prepared primarily for internal use at the Oak Ridge National Laboratory. It is subject to revision or correction and therefore does not represent a final report.

LEGAL NOTICE

This report was prepared as an account of Government sponsored work. Neither the United States, nor the Commission, nor any person acting on behalf of the Commission:

A. Makes any warranty or representation, expressed or implied, with respect to the accuracy, completeness, or usefulness of the information contained in this report, or that the use of any information, apparatus, method, or process disclosed in this report may not infringe privately owned rights; or

B. Assumes any liabilities with respect to the use of, or for damages resulting from the use of any information, apparatus, method, or process disclosed in this report.

As used in the above, "person acting on behalf of the Commission" includes any employee or contractor of the Commission, or employee of such contractor, to the extent that such employee or contractor of the Commission, or employee of such contractor prepares, disseminates, or provides access to, any information pursuant to his employment or contract with the Commission, or his employment with such contractor.

ORNL-TM-3020

Contract No. W-7405-eng-26

Isotopes Development Center

RADIOISOTOPE PROGRAM (8000) PROGRESS REPORT FOR MAY 1970

A. F. Rupp

Work Sponsored by
AEC Division of Isotopes Development

JUNE 1970

OAK RIDGE NATIONAL LABORATORY
Oak Ridge, Tennessee
operated by
UNION CARBIDE CORPORATION
for the
U.S. ATOMIC ENERGY COMMISSION

LOCKHEED MARTIN ENERGY RESEARCH LIBRARIES

3 4456 0514206 6

CONTENTS

Page

RADIOISOTOPE PRODUCTION AND MATERIALS DEVELOPMENT 1

NEUTRON PRODUCTS - 08-01-01 1

A. Biomedical Radioisotopes 1

1. Thulium-171 1
2. Phosphorus-33 2
3. Potassium-43 2
4. Ruthenium-97 2

B. Research Radioisotopes 2

1. Lanthanum-137 2

C. Isotopic Power 3

1. Thulium-170 3

D. Miscellaneous 3

1. HFIR Target Testing 3

E. Supporting Technology 3

1. Radioisotope Characterization 3
2. Radioisotope Special Analysis and Quality Control 4

CYCLOTRON PRODUCTS - 08-01-02 4

A. Biomedical Radioisotopes 4

1. Rubidium-83 4
2. Rubidium-84 4
3. Indium-111 5
4. Gallium-67 6
5. Neodymium-140 7

B. Miscellaneous 7

1. Barium-131 7

FISSION PRODUCTS - 08-01-03 8

A. Krypton-85 Enrichment 8

B. Cesium-137 Process and Product Technology 9

Page

1. Cesium-137 Process Study 9
2. Cesium-137 Product Technology 9
3. Cesium Source Testing 11

RADIATION SOURCE DEVELOPMENT - 08-01-04 12

A. Strontium-90 Silicate Sources 12

1. Matrix Studies 12
2. Encapsulation 12
3. Characterization 12

B. Fabrication of Carbon-14 and Technetium-99 Radiographic Sources 12

C. Alpha Source Fabrication Development 12

D. Strontium-90 Beta Sources 12

E. Determination of the Concentration of Arsenic in Soils . . . 12

RADIOISOTOPE SOURCE SAFETY TESTING - 08-01-04 13

A. Special Form Prototype Testing 13

B. Testing Sources with Manufactured Leaks 13

C. Surveillance of Regulations and Cask Evaluations 13

D. Source Leak Test Guide 13

E. Sealed Source Testing 13

F. Unsealed Source Testing 13

TECHNOLOGY UTILIZATION - 08-01-05 15

A. Information Center 15

B. Isotopes and Radiation Technology 15

C. Publications 15

RADIOISOTOPE APPLICATIONS DEVELOPMENT 17

BASIC TECHNOLOGY DEVELOPMENT 17

A. Liquid Scintillation Development 17

Page

1. Alpha Radiation Damage in Phosphors 17
2. Cerenkov Counting 17
3. Information Storage on Phosphor Screens 17

SYSTEMS ENGINEERING APPLICATIONS - 08-03-02 18

A. Oceanographic Systems Study 18

RADIATION PROCESSING APPLICATIONS DEVELOPMENT 18

ORGANIC SYNTHESIS WITH ISOTOPIC SOURCES - 08-04-01 18

A. Straight Chain Fatty Acids 18

RADIOISOTOPE SALES 19

RADIOISOTOPE PRODUCTION 21

CESIUM-137 PROCESSING 21

STRONTIUM-90 PROCESSING 21

GENERAL OPERATIONS 21

MAINTENANCE 21

SOURCE FABRICATION 21

A. Cesium-137 21

B. Strontium-90 21

C. Miscellaneous Sources 21

OPERATIONAL SUMMARY 22

PROCESS STATUS 22

MISCELLANEOUS RADIOISOTOPE PROCESSING 22

ADMINISTRATIVE SECTION 23

RADIOISOTOPE PROGRAM (8000) PROGRESS REPORT FOR MAY 1970

A. F. Rupp

RADIOISOTOPE PRODUCTION AND MATERIALS DEVELOPMENT

NEUTRON PRODUCTS - 08-01-01

A. Biomedical Radioisotopes

1. Thulium-171

Thulium-171 is a 1.9-year beta emitter with a maximum beta energy of 0.097 MeV; it is potentially useful as a tracer in biology and biomedical experiments. It can be made carrier-free by irradiating enriched erbium-170 and the product will be practically free of the more energetic thulium-170.

A cooperative study involving the ORNL Biology and Health Physics Divisions has been initiated to study the relation of air pollutants to lung carcinomas. Carcinogens enter the respiratory tract either as particulates or bound to particulates. A study of the alteration of deposition of particles in the lung and their elimination from the lung following respiratory infection is therefore of great importance in understanding the possible role of respiratory infection in the development of lung cancer. A radioactive dust is used in the first stage of these experiments to study particulate deposition and removal rates; a carcinogen will be used in later experiments. This study will be made using inbred mice with and without induced viral and/or bacterial pneumonitis.

For the initial stages of this project, a highly insoluble Cr_2O_3 dust with known particle size distribution typical of certain types of industrial air pollutants was activated to form $^{51}Cr_2O_3$. The activated dust was made into gelatin-stabilized suspensions for intravenous and intratracheal administration, and aqueous suspensions were aerosolized for administration by inhalation. Whole-body gamma counting was used to follow elimination of the $^{51}Cr_2O_3$.

Initial experiments revealed that administration intravenously results in a large uptake of $^{51}Cr_2O_3$ in the liver and spleen. This result eliminates further consideration of the intravenous technique because dissection would be required in order to follow the respiratory function alone. The inhalation technique duplicates natural exposure, but the large accumulations in the fur and nares of the experimental animals prevent using whole body counting to follow the respiratory function for the first 2 to 3 days. The intratracheal administration is not complicated by the deposition of activity at other sites and allows following the activity in the respiratory tract immediately. The early stages after inhalation exposure can be compared with the course of the intratracheal exposures by dissection and counting of lungs alone at various times after exposure.

The initial experiments give promise of a convenient technique for studying the short-term respiratory behavior with activated dust. Future work will entail tagging thulium-171 on a suitable aerosol carrier of known particle size distribution as a tracer to study long-term effects.

2. Phosphorus-33

Nothing to report.

3. Potassium-43

Nothing to report.

4. Ruthenium-97

Nothing to report.

B. Research Radioisotopes

1. Lanthanum-137

Lanthanum-137 has a half-life of 6 x 10^4 years. It possesses an excited state at 0.010 MeV with an 89-nsec lifetime, which makes this nuclide suitable for the resonant absorption applications of the Mössbauer technique. The objective of this study is to determine the production parameters and separation procedures for making carrier-free lanthanum-137 available in significant quantities.

A cooperative program was initiated with Hebrew University of Jerusalem to produce approximately 150 μg of lanthanum-137. A target containing 61 mg of enriched $^{136}CeO_2$ (22%) was irradiated for one 23-day cycle in a flux of 2 x 10^{15} n/cm^2.sec. After a period of decay to allow short-lived activities to subside, the target was dissolved in nitric acid and the cerium was oxidized with $NaBrO_3$ and extracted with di(2-ethylhexyl)phosphoric acid using the procedure described by M. Deschuyter *et al.*[1]

The preliminary analysis by a spark source mass spectrometer indicated a yield of approximately 250 μg of lanthanum-137, but the product was contaminated with europium activities from impurities in the enriched target material. After 6 months' decay the europium-156 which had been the principal radioactivity had decayed and europium-154, europium-155, and terbium-160 were identified as the principal activities, with traces of cerium-139 and cerium-141 from incomplete separation from the target. The product was purified by anion exchange on AG Dowex 1-X8 (100-200 mesh) by using 0.0125 *M* alpha-hydroxyisobutyric acid in a 25% water-75% ethanol solution. This anion exchange system reported by Farris[2] has the advantage of eluting the lighter rare earths first, which in this case is the lanthanum product. There is a sharp onset in the elution of the lanthanum

---

[1]M. Deschuyter, D. L. Massart, A. Speecke, and J. Hoste, Radiochemica Acta 10: 11-14 (1968).

[2]J. P. Farris, J. Chromatog. 26: 232 (1967).

at approximately 4 column volumes and 90% of the lanthanum is eluted within about the next 4 column volumes. Because the lanthanum-137 has no gamma emissions, it can only be detected by the barium X rays. A silicon detector with a 5-mil beryllium window was used to follow the column separation. Spectra of the fractions were also taken with a Ge(Li) detector to study the behavior of the cerium, europium, and terbium contaminants.

The product will be recovered and analyzed by mass spectrometry. The cerium target will then be recovered for re-use. It should now be free of the europium and terbium contaminants.

C. Isotopic Power

1. Thulium-170

The purpose of this project is the determination of the rate of evaporation and vapor pressure at temperatures up to 2300°C for nonradioactive mixtures of Tm_2O_3-Yb_2O_3 by means of a Knudsen cell in a thermogravimetric analysis (TGA) apparatus. The current objectives are: (1) to continue the work to assemble the TGA apparatus including necessary repairs and adjustments and (2) to complete fabrication of the Knudsen cells.

Fabrication of Knudsen cells of two different capacities have been completed. Installation of automatic shut-off devices in both the vacuum and cooling-water systems of the TGA unit has been delayed.

D. Miscellaneous

1. HFIR Target Testing

Eighteen hydraulic tube rabbits were tested in May and seven were rejected.

E. Supporting Technology

1. Radioisotope Characterization

Evaluations of half-lives and decay-scheme information continue as needed in analysis and handling of routine or developmental products. A survey of the literature was made for half-life values for silicon-32; those reported ranged from 280 to 710 years. It was recommended that 500 years be used, pending availability of material suitable for experimental measurement by mass spectrometry and assay of the daughter, phosphorus-32. The Medical Internal Radiation Dose (MIRD) Committee of the Society of Nuclear Medicine has published its Pamphlet No. 6, another tabulation of decay schemes, containing information for 30 common radionuclides.

A paper reporting dubious evidence for variation of half-life of cobalt-60 with chemical state was reviewed for a journal. Rejection was recommended because all values reported were longer than the well established one of 5.26 years, probability of instrument nonlinearity was indicated, and the test sources were in the same laboratory as a source 10^8 times stronger.

2. Radioisotope Special Analysis and Quality Control

Interviews and correspondence with producers and users of radioactivity standards continued. Interviews were conducted recently in the Washington-New York-Boston and Southwestern and Los Angeles areas. A small majority of users are in the life sciences; radiopharmaceuticals are a major item. Attempts have been made to establish exchange of information with technical groups whose interests include standards, and contact has been effected with several, including the Subcommittee on Radiopharmaceuticals of the Atomic Industrial Forum, and the Nuclear Medicine Standards Subcommittee of the College of American Pathologists. The chairman of the MIRD Committee has expressed concern about standards. Several such groups have been formed recently, perhaps in part as a result of our survey directing attention to the problems. Sam Reynolds has been asked to organize a one-day session on standards for the Spring ACS meeting in Los Angeles, and initial response of potential contributors has been favorable.

CYCLOTRON PRODUCTS - 08-01-02

A. Biomedical Radioisotopes

1. Rubidium-83

Nothing to report.

2. Rubidium-84

The objectives of this program are to improve the technology for the production of higher purity rubidium-84. The activity of the rubidium product obtained from proton bombardment of natural krypton in the ORNL 86-Inch Cyclotron is comprised of 9.7% rubidium-83 (83 days), 68% rubidium-84 (33 days), and 22% rubidium-86 (18.7 days) at end of bombardment. The longer half-life of rubidium-83 reduces the $^{84}Rb/^{83}Rb$ ratio even further with time. Appreciable amounts of rubidium-83 are undesirable for positron scintigraphy, because its principal gamma emissions [521 keV (46%), 530 keV (31%), and 553 keV (16%)] are similar enough in energy to the 511-keV annihilation radiation of rubidium-84 (intensity = 42%) to prevent energy resolution by the positron camera, thereby leading to increased background and loss of spatial resolution. Interest in using rubidium-84 for myocardial scanning with a positron camera has prompted the search for a higher purity product.

Two rubidium-84 production runs with a secondary, less highly enriched krypton-84 target were performed during May and the product was substituted, with customer consent, for our regular product for their evaluation. The target and product compositions for the three targets irradiated are shown in Table 1. The observed product compositions for both the best and second-best krypton-84 targets agree well with the calculated values extrapolated from the natural krypton results, assuming equal cross sections. The rubidium-83 would seem to be slightly higher than expected and may be due to (p,2n) reactions on krypton-84. This rationalization will be investigated by increasing the thickness

Table 1. Production of Rubidium-84 from Krypton-84

Target Material	Target Composition (at. %)			Product Composition[a] (%)		
	^{83}Kr	^{84}Kr	^{86}Kr	^{83}Rb	^{84}Rb	^{86}Rb
Natural krypton	11.5	57.0	17.3	9.7	68	22
Best ^{84}Kr target	1.5	96.0	2.4	1.4	96	2.8
Second-best ^{84}Kr target	4.2	88.6	6.9	5.4	87	7.7

[a]End of bombardment.

of the aluminum window to degrade the proton beam energy further before striking the target, thereby suppressing the more energetic (p,2n) reaction.

The product obtained with the second-best target is still superior to the regular product, but as can be seen in Table 1 the primary krypton-84 target offers a superior product. Production rates and cyclotron yields are very similar for both enriched targets, approximately 120 mCi/mA-hr and approximately 3.6 mCi/hr, respectively, for the target configuration employed.[3]

3. Indium-111

The objectives of this program are twofold: (1) to elucidate, define and optimize pertinent production parameters (cyclotron target material, cyclotron beam energy and current conditions, adverse side reactions leading to undesirable isotopic impurities, target processing and product purification procedures, and target recovery, if necessary) and (2) to make sufficient material available to cooperative participants for their evaluation of indium-111 as a diagnostic radionuclide in medicine. Such applications would include spinal-cerebral cisternography, aerosol lung studies, delayed brain scanning, visualization of the lymphatic system, metabolic studies of indium-labeled macroaggregates and colloids, and possible applications for tumor localizations. Indium-111 has both a favorable decay scheme [gamma emissions of 173 keV (89%) and 247 keV (94%)] ideally suited for external detection and an optimal half-life (2.81 days) for labeling and distribution studies which must be carried out over 24 hr or longer. The use of indium in such lengthy studies is currently impossible with the indium-113m (1.73 hr) isotope now in general use.

Additional operating experience on the HBr-isopropyl ether extraction process for indium-111 purification was obtained during May. Three indium-111 development runs were performed and a total of approximately 270 mCi was supplied to our medical cooperative participants for their application and evaluation. Additional information was gathered on the extent of indium-114m (50 days) contamination of the product.[4] The

[3]A. F. Rupp, Radioisotope Program (8000) Progress Report for February 1970, ORNL-TM-2910, Oak Ridge National Laboratory, p. 6.
[4]A. F. Rupp, ORNL-TM-2910, p. 8.

extent of indium-114m contamination of five samples that had decayed at least 30 days was found to be holding at 0.012% of the indium-111 activity (all data corrected to end of bombardment). The effect of product decay time on the indium-114m determination was also investigated, and it has been demonstrated that a 30-day decay period (the $^{111}In:^{114m}In$ activity ratio is still ≈10:1 after this period) is sufficient to adequately and accurately resolve the 190-keV indium-114m photon from the adjacent 173- and 245-keV indium-111 photons using a Ge(Li) detector. If a much shorter decay period is used, the 190-keV photon is lost in the low-energy Compton continuum from the 245-keV photon and accurate quantification of the indium-114m impurity level for a sample cannot be obtained. Elaborate and expensive coincidence counting procedures could be performed to determine the amount of indium-114m contamination sooner (e.g., Compton suppression using plastic scintillation detectors in anticoincidence to increase the peak-to-Compton ratios), but as long as the cadmium-111 target material continues to maintain the expected low impurity level, this would not seem warranted. It is desirable to make random checks of the products for indium-114m contamination to insure that the target has not been contaminated with natural cadmium and that the product quality remains high. No target development was performed during May nor is any planned during June.

4. Gallium-67

The objectives of this program are to determine the optimal target configuration for gallium-67 (78 hr) production in acceptable purity and quantity and to provide gallium-67 for clinical applications research and development. Interest in this isotope has been spurred by evidence, obtained by the Medical Division of Oak Ridge Associated Universities (ORAU), of a high uptake of carrier-free gallium-67 by lymphoid tumors in both animals and humans. This interesting discovery was made during the evaluation of gallium-67 as a bone-scanning agent for a patient with Hodgkin's disease and has since been successfully extended to a clinical study of several types of malignant neoplasms. Additional animal studies have been performed by the ORAU group indicating that it is the viable rather than necrotic tumor cells in mice and rats that are mainly responsible for uptake of gallium-67. Autoradiographic studies of rat tumors indicate it is chiefly located in tumor cytoplasm. Their results suggest that gallium-67, with its remarkable ability to concentrate in living malignant cells, may be useful for both clinical diagnosis and in studies of the nature of malignant change.

Gallium-67 decays by electron capture with the emission of four main gamma rays of 93, 184, 296, and 388 keV with intensities of 40, 23, 20, and 8%, respectively. Carrier-free gallium-67 is produced by the $^{68}Zn(p,2n)^{67}Ga$ reaction by bombarding natural, high purity zinc tubing targets (0.375-in. OD by 0.020-in. wall thickness) with 22-MeV protons in the ORNL 86-Inch Cyclotron. Irradiation of natural zinc also produces appreciable amounts of gallium-66 (9.5 hr) that must be allowed to decay before human use.

Two gallium-67 preparations were made and shipped to ORAU during May, and four smaller portions were sent to clinicians interested in using this radionuclide.

Additional operating experience on the HCl-isopropyl ether extraction process for gallium-67 purification was obtained. All pertinent production and processing parameters were consistent with those reported in April.[5] Users who have received this improved ether-processed product expressed the opinion that it is superior to the earlier methylisobutyl ketone processed product with respect to Zn(II) and Fe(III) impurities (determined by chemical spot tests) and to solid content (determined by evaporation of an aliquot to dryness). No physiological differences between these products have been detected. The ether process will be tested further during June.

5. Neodymium-140

Nothing to report.

B. Miscellaneous

As part of a continuing effort to assist cooperative participants and prospective users in meeting their specialized requirements for specific radionuclides not usually available, short-term tasks are occasionally undertaken. The demand or potential usefulness of these radionuclides is not considered adequate to justify extensive effort or a continuing development program, but the services performed are valuable to meet program objectives.

1. Barium-131

High-specific activity barium-131 (11.7 days) was requested for use in medical studies. We regularly produce it by irradiating natural barium oxide in the ORR until a specific activity of approximately 30 mCi/g is obtained, but due to the high chemical toxicity of barium this product was not acceptable for the customer's use. In order to meet the requirements, 48.8% enriched barium-130 was selected as the target material; this enriched target was expected to (and did) yield a product of approximately 500 times higher specific activity than a natural barium target under similar irradiation conditions. Since this 48.8% enriched barium-130 had not been used previously for production purposes, a test irradiation and product analysis was needed to determine whether only dissolution of the target was needed before shipment or whether additional processing would be required to remove unexpected radionuclidic impurities.

A 1-mg target of 48.8% enriched barium-130 was irradiated for three days in the hydraulic tube position of the ORR and then dissolved in 1 M HCl. A gamma-ray spectrum was obtained from an aliquot of the dissolver solution using a Ge(Li) detector connected to a 4096-channel pulse height analyzer. Computer analysis of this spectrum indicated that this product was of greater than 99.5% radionuclidic purity [exclusive of barium-131 daughter activities, i.e., cesium-131 (9.7 days), and other barium activities]. Less than 0.1% cesium-132 was detected in the product, along with a low-intensity, unidentified photon at 956 keV. A check of standard listings of abundant reactor-produced photons arranged by increasing energy yielded no likely radioisotopes for this photon. It is felt that

[5]A. F. Rupp, Radioisotope Program (8000) Progress Report for April 1970, ORNL-TM-2993, Oak Ridge National Laboratory, p. 6.

this gamma ray may be a very low abundance barium-131 transition, or some type of sum peak. The counting sample will be counted after decay of the barium-131 to determine if there are any long-lived activities present that might have been masked by the barium-131 activity.

FISSION PRODUCTS - 08-01-03

A. Krypton-85 Enrichment

The system was shut down for two days during May while the cooling tower was cleaned.

The krypton-85 peaks were centered in columns C, CD, and D (see Fig. 1) and the depleted ends removed. The depleted gas was replaced with 3.3% feed material. Column A, which has not been operating properly, was emptied of krypton and the gas put into columns AB and B to replace depleted ends. The intercolumn tubing was checked for blockage, but nothing was found. The bellows pump was removed and during a careful inspection the drive motor was found to have a partially stripped gear in the speed reducer. The motor and reducer were replaced. Since the column system

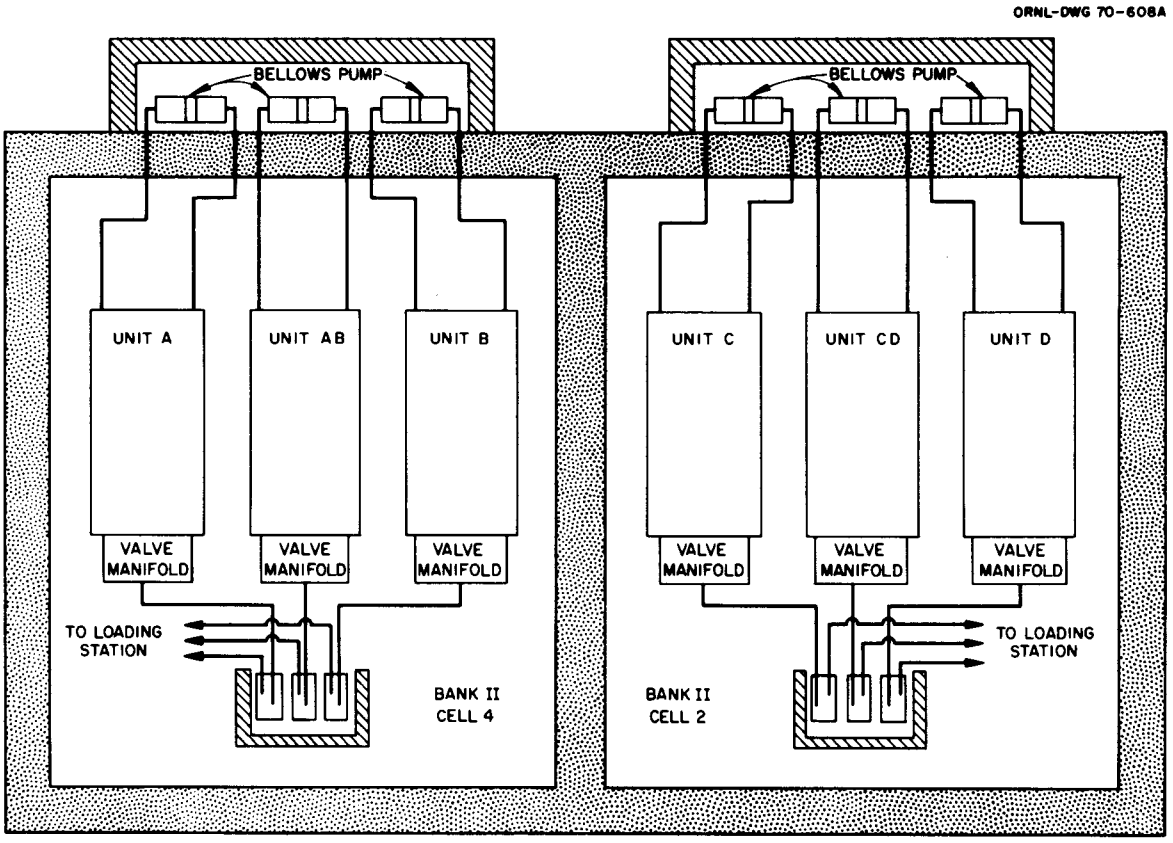

Fig. 1. Schematic Arrangement of Krypton-85 Columns.

was empty of fission krypton, it was filled with stable krypton to test the operation of the system and to renew the supply of enriched krypton-84 used as a cyclotron target to produce rubidium-84. Samples were taken of the gas at each end of the system and the samples were analyzed by mass spectrometry. Results of these analyses showed the mass 86 peak to be enriched at the heavy end and depleted at the light end, so column A appears to be operating properly now. The present status of the six cascades is shown below. The count rate indicates the level of enrichment.

Unit	Activity in Unit (Ci)	Time Since Last Product Removal (days)	Count Rate in Product Section (counts/min)	
			May 1970	April 1970
A	--	14	--	--
AB	1345	63	7550	6500
B	1224	63	6300	5000
C	1145	153	6000	6000
CD	1757	64	7950	7500
D	1273	101	7150	8500

Four lots of aluminum foil impregnated with highly enriched krypton-85 in the calutron were stored for retention tests. A method of releasing the krypton by dissolving the foils to recover the radioisotope as a gas is under investigation.

B. Cesium-137 Process and Product Technology

1. Cesium-137 Process Study

Nothing to report.

2. Cesium-137 Product Technology

The purpose of this task is to develop and improve cesium-137 source forms and to characterize the source forms for operational and safety requirements.

The objective of the current study is to find a means of eliminating the solid-solid phase transition which occurs at 469°C with an accompanying volume increase.

Differential thermal analysis (DTA) thermograms with more consistent experimental conditions (heating rate, amount of sample and method of compaction, location of thermocouple, etc.) than before have been obtained for CsCl-KCl mixtures having low KCl contents (1 to 20 mole % or 0.445-9.97 wt % KCl). The results summarized in Table 2 indicate that the solid-solid transition peaks for the two mixtures containing 0.445 and 0.67 wt % KCl, respectively, are so faint that they are barely identifiable. Interpolation of the data shows that heating would probably cause the solid-solid transition peak to disappear completely for a mixture with approximately 0.8 wt % KCl. Also seen in Table 2 is the trend for both melting and freezing peak temperatures to be depressed with increasing KCl content up to 20 mole % (melting point of KCl is 776°C, which is higher than that of CsCl).

Table 2. Phase Transition Characteristics of CsCl-KCl Mixtures[a] with Low KCl Content

KCl Content		Transition Peak Temperature[b] (°C)		
Mole %	Wt %	Solid-Solid Transition[c]	Melting[d]	Freezing
0	0	469	640	636
1	0.445	461	637	634
1.5	0.67	462[e]	638	633
1.75	0.785	462[e]	639	633
2.0	0.895	--	637	632
3.0	1.35	--	633	629
4.0	1.815	--	630	624
5.0	2.28	--	630	626
7.0	3.23	--	627	623
10.0	4.69	--	624	618
15.0	7.25	--	616	613
20.0	9.97	--	610	604

[a]Mixtures that have been previously molten.
[b]Average value.
[c]On heating.
[d]Melting point of KCl is 776°C.
[e]Barely identifiable.

The disappearance of the solid phase transition peak does not seem to be a metastable equilibrium phenomenon. This supposition is based on an isothermal DTA run in which the freshly molten 3 mole % KCl-CsCl mixture was slowly cooled to approximately 460°C, and this temperature maintained for 24 hr. The "heat-treated" mixture was then allowed to cool gradually to room temperature. No solid phase transition was observed either during the "annealing" process or upon reheating to the melting point.

Thermograms for the mixtures containing 0.895 to 4.69 wt % (2 to 10 mole %) KCl showed one or more short peaks ("blips") of varying sizes on cooling to about 100-240°C. A rather pronounced peak appeared in the temperature range of 220 to 240°C for the 2- to 3-mole % KCl-CsCl mixtures. This type of blips generally diminished with repeated heating (through melting point) and cooling of the mixture, eventually disappearing after three to four such heat treatments. In all cases, no corresponding peak was observed when the mixture was heated to the melting point.

In an attempt to investigate how the crystal structure of CsCl has been modified by addition of KCl, the CsCl-KCl mixtures of three selected compositions (1-, 2-, and 50-mole % KCl) were subjected to various heat treatments in a muffle furnace. Samples corresponding to structures before and after the solid phase transition point of pure CsCl were taken by quenching the mixtures in air at room temperature. Samples at approximately 400°C (below the transition point) were obtained after the mixtures had been left in the furnace at that temperature for 24 hr.

According to the X-ray diffraction patterns of the samples mentioned above, there has been no change in the lattice parameters (body-centered cubic, low-temperature form) of CsCl in the presence of KCl. That is, the diffraction pattern of the mixture was simply a superimposition of patterns for pure CsCl and KCl. (The diffraction pattern of KCl for the 1 mole % KCl-CsCl mixture was only faintly visible.) This may imply that both salts are present in the mixture as mixed crystals. At present, it is not clear as to how effective the method of air quenching was in freezing the high temperature structures, even though the amounts of mixtures used were small (about 4 g each) and large surface areas had been exposed to the cold air.

It may be inferred from the DTA thermogram and the X-ray diffraction pattern for the 2 mole % KCl-CsCl that the fairly distinct peak (or blip) in the DTA thermogram on cooling to 220-240°C is attributable to a partial separation of solid solution from the pure CsCl phase. This assumption is based on a recent paper reporting a similar behavior for the CsCl-RbCl system.

Further work, including the high temperature X-ray diffraction as well as additional DTA runs, will be required to clarify the complete phase behavior and structural transformation of the CsCl-KCl system.

The study on the equilibrium phase behavior of the CsCl-KCl system will be extended to the mixtures with intermediate to high KCl contents. Both the DTA and X-ray techniques will be used in the study.

3. Cesium Source Testing

To fulfill the obligation to test cesium sources (BNL strip type) for the U. S. Army Natick Irradiator, test equipment was constructed to thermally cycle sources between -80 and 120°C. The equipment consists of a small motor-driven cable that slowly lowers the source into a -80°C dry ice-trichloroethylene bath for 10 min and then raises the source into an electric tube heater at 300°C for 7 min.

Tests of the equipment using a source with thermocouples, one on the outside and one at the center, showed that after heating for 7 min an outside temperature of 167°C and an inside temperature of 120°C were obtained. The cooling cycle produced an outside temperature of -80°C and an inside temperature of -75°C.

Four sources were fabricated with inactive CsCl pellets by the normal fabrication procedure. Source F-67 was cycled for 757 times, which is comparable to more than 2 years of cycling in the Natick Irradiator. No leaks or swelling were detected. Source F-69 has been cycled 452 times with no leaks or swelling. This source will be cycled a total of 2000 times.

RADIATION SOURCE DEVELOPMENT - 08-01-04

A. Strontium-90 Silicate Sources

1. Matrix Studies

Nothing to report.

2. Encapsulation

Nothing to report.

3. Characterization

Nothing to report.

B. Fabrication of Carbon-14 and Technetium-99 Radiographic Sources

Nothing to report.

C. Alpha Source Fabrication Development

Nothing to report.

D. Strontium-90 Beta Sources

Two beta sources, one containing 1.2 Ci of strontium-90 and the other 12 Ci, were fabricated and delivered to the Health Physics Division of ORNL for use in ecology radiation studies.

A nitrate solution containing strontium-90 was absorbed in a graphite matrix that was 14 in. in diameter and 1/16 in. thick. This disk was encapsulated in an aluminum source holder having a 0.005-in. aluminum window. A homogeneous beta radiation field of approximately 50,000 R/hr at a distance of 4 in. is desired.

E. Determination of the Concentration of Arsenic in Soils

The amount of arsenic contained in the soils of some orchards has been increasing over the past 50 years because the sprays used to control insects contain arsenic. The concentration of available arsenic in the soil should not exceed 50 ppm or the production of the fruit will be reduced.

To be able to accurately measure by fluorescent X-ray analysis the total arsenic concentration in the soil sample when the sample contains other elements in greater concentration than the arsenic would be advantageous in that this method would shorten the time now necessary to survey the soil in an orchard. If the arsenic concentration is drastically high, it has been suggested that such soil be plowed under to a depth of 3 ft or greater, even if this is only a temporary solution.

The molybdenum X ray which is produced by absorbing the gamma radiation from americium-241 in a molybdenum target is used to fluoresce the arsenic in the soil sample to produce the characteristic X ray. This X ray is detected by the lithium-drifted silicon detector.

Soil samples that have been analyzed for arsenic concentration have been obtained from the Tree Fruit Research Center of Washington State University, located at Wenatchee, Washington. At the present time, fluorescent X-ray analyses are being made to determine total arsenic concentration. Of greater importance is the available arsenic concentration, the arsenic which is in a form available to the growing tree. It has been proposed by Dr. Nels Benson of the Tree Fruit Research Center that the available arsenic be extracted from the soil matrix and analyzed by fluorescent X-ray techniques. This may prove to be a more sensitive method for measurement, since the solution can be added to a standard matrix material and the same method applied.

Samples of soil containing as little as 16 ppm of arsenic have been analyzed and the X-ray photopeak of arsenic detected and measured. Further analyses of the results should determine how well the measurements correlate with other methods of analyses.

RADIOISOTOPE SOURCE SAFETY TESTING - 08-01-04

A. Special Form Prototype Testing

Nothing to report.

B. Testing Sources with Manufactured Leaks

Nothing to report.

C. Surveillance of Regulations and Cask Evaluations

Nothing to report.

D. Source Leak Test Guide

Nothing to report.

E. Sealed Source Testing

Nothing to report.

F. Unsealed Source Testing

Unsealed sources are tested to evaluate their ability to contain the radioactive material under normal and abnormal conditions.

Five $^{241}AmO_2$ gamma foils developed by Battelle Northwest are being evaluated. These sources have a 0.5-in.-diam by 25-μm-thick active layer of Cu-$^{241}AmO_2$. The backing is a 0.625- x 0.625- x 0.030-in. copper strip. The active surface is covered by a 24-μm layer of copper, and the entire source is covered by a 5-μm layer of stainless steel. All layers were deposited by radiofrequency sputtering. Each source is thought to contain approximately 2 mCi of americium-241. Initial smears of the sources

ranged from 54 to 600 dis/min alpha. Microscopic viewing of these sources revealed that each source had several small depressions in the surfaces, some of which were copper colored, and several bumps or ridges that appeared to be stainless steel.

Some of the sources were subjected to the tests for Class I-A of the ORNL Source Capsule Classification System using smear tests and microscopic examination to detect failures. The activities reported in each case are in dis/min alpha. The maximum temperature resistance test was not made since it will be combined with a standard 1-hr fire test to be made in the future. The tests performed were:

Operating Temperature - The source was heated for 24 hr at 212°F and then cooled and held at 32°F for 24 hr. The source smear was less than 30 dis/min, and no visible damage was found.

Thermal Shock Test - The source was heated at 212°F for 1 hr; then it was plunged into a bath of ice water (32°F) and finally placed in a container of dry ice (-70°F) for 15 min. The smear was less than 30 dis/min, and no visible damage occurred.

External Pressure Test - The source was placed in a pressure vessel and held for 15 min at 30 psig. The smear was less than 30 dis/min, and no visible damage occurred.

Puncture Resistance Test - The active surface of the source was placed on a 1/8-in.-diam pin and a 2-g weight was dropped from a height of 3 ft striking the opposite side of the source. The source smeared 60 dis/min. The pin made a slight indentation in the active surface, but no visible break in the metal surface was found.

Crushing Force Test - The source was placed between two smooth metal plates and a force of 200 lb was applied for 15 min. The source smeared 48 dis/min. No visible damage occurred.

Shear Strength Test - The source was placed in the shear blocks and a force of 40 lb was applied for 30 min. The source smeared 60 dis/min. The shear test left a mark on the source, but no break in the metal was observed.

Impact Force Test - The source was placed on a steel pad and a 5-lb weight was dropped from a height of 4 ft. The source smeared less than 30 dis/min. This test did not result in any visible loss of containment; however, the source was flattened out somewhat and some of the metal at the edge of the source (inactive area) was broken away.

In addition to the ORNL Class I-A tests, a temperature-humidity test and a hot water leach test were started. The temperature-humidity test is programmed for 8 hr at 136°F and 90% relative humidity and 8 hr at 36°F and 50% relative humidity. A period of 4 hr is provided for making the change from the high temperature conditions to the low temperature conditions and vice versa, thus giving one complete cycle every 24 hr. The

source smeared 621 and 570 dis/min on the third and sixth days, respectively. On the tenth day the source smeared 55,000 dis/min and appeared to have been wetted with water. It was found that condensate from an uninsulated spot was dripping onto the source. The pH of this water was checked and found to be neutral. A shield was placed over the source to prevent additional water from falling onto it. After 13 days the source smeared 36,000 dis/min. This test will probably be repeated with a fresh source.

After 6 days of leaching one of the sources in boiling water, the total activity in the water was approximately 400 dis/min. When solids were noticed in the leach water, the source was removed for examination. It was found that part of the stainless steel layer on the back of the source (inactive side) was flaking off. This test will be continued since the activity loss from the source is still low.

TECHNOLOGY UTILIZATION - 08-01-05

A. Information Center

The number of accessions in the Isotopes Information Center has continued to increase at a rate of 500 per month; 19 thousand items are now retrievable on computer tape and 75% (soon to be 100%) of these are also retrievable by Termatrex searching. During May, 154 IIC publications and reprints were sent out in answer to queries and 90 requests that required specific answers were filled. Seven letters were translated for Isotopes Sales, and a journal article was translated.

Editing of a machine translation of a Russian book on radiation-induced mutations, undertaken at the request of the Division of Biology and Medicine, was completed and soon will be sent for composition and printing. Some assistance was given to NASA and to DTIE on machine translations of Russian work related to Isotopes Information Center work, and at the request of DTIE the isotope-related volumes of the "Understanding the Atom" series were recorded on tape for blind students' use. A list of reviews in process (for answering future queries) is given on page 16.

B. Isotopes and Radiation Technology

Galley proofing for Isotopes and Radiation Technology 8(1) was about half completed, and manuscript writing and editing for 8(2) was started.

C. Publications

ORNL-tr-2268, K. Schoenemann, Chemical Reactor Design: Principles Proved by Practice, Genie Chimique 91(6): 161-76 (June 1964) (French, translated by Martha Gerrard).

Martha Gerrard and P. S. Baker, Selected Abstracts of World Literature on Production and Industrial Uses of Radioisotopes, ORNL-IIC-22, Pt. 4 (March 1970).

Title	Author(s)	Status, % Complete
Cement-Polymer Combinations	V. I. Solomatov, translated from Russian and edited by Martha Gerrard, P. S. Baker, and R. E. Greene	At printers
DID Research and Developments - 1969	Isotopes Information Center Staff	At printers
Indium-113m: Preparation and Uses	Martha Gerrard	10
Flow Measurement	R. H. Lafferty, Jr.	15
Iodine-125	P. S. Baker and Martha Gerrard	25
Isotopic Methods of Examination and Authentication in Art and Archaeology	F. J. Miller, E. V. Sayre, and B. Keisch	At reproduction
Oceanography[a]	Isotopes Information Center Staff	90
Patent Review - Process Radiation Development	R. E. Greene, P. S. Baker and Helen Warren	90
Potato Sprout Inhibition by Radiation	F. E. McKinney	40
Radiation vs Glass[b]	D. N. Hess	20
Radioisotopes in the Pharmaceutical Industry	P. S. Baker and Martha Gerrard	5
Radioisotopes in the Steel Industry[c]	Republic Steel Corporation	10
Radioisotopes in X-Ray Fluorescence Analysis	R. H. Lafferty, Jr.	5
Selected Abstracts of World Literature on Production and Industrial Uses of Radioisotopes	Martha Gerrard and P. S. Baker	20
Self-Diffusion in Liquids	F. J. Miller	75
Strontium-90	Roberta Shor, R. H. Lafferty, Jr., and P. S. Baker	100[d]
Technetium-99m: Preparation and Uses	Martha Gerrard and P. S. Baker	30
Radioisotopes in the Textile Industry	F. J. Miller	90
Use of Radioisotopes in Sedimentology	V. Romanovsky, translated and edited by Martha Gerrard	10
Wheat Disinfestation - A Worldwide Review	F. E. McKinney	8
Wood Plastics	R. E. Greene	75
Yttrium-90	Martha Gerrard	10
Permuted Isotopes and Radiation Technology Indexes	Helen Raaen	25
Presowing Irradiation of Seeds	Machine translation of Russian book, edited by Martha Gerrard and P. S. Baker	1st draft complete

[a]Draft completed; being held at DID.
[b]Indefinite.
[c]Will be in sections; first section now in hand.
[d]Draft completed; DID reviewing.

RADIOISOTOPE APPLICATIONS DEVELOPMENT

BASIC TECHNOLOGY DEVELOPMENT - 08-03-01

A. Liquid Scintillation Development

1. Alpha Radiation Damage in Phosphors

Nothing to report.

2. Cerenkov Counting

Nothing to report.

3. Information Storage on Phosphor Screens

Our investigation of phosphors has been extended to the development of special phosphor screens designed for short-term information storage. The basic concept involves the utilization of phosphors that have long decay constants (0.005 to 20 sec). The phosphors are used in the form of some type of screen where the phosphor particles are uniformly distributed throughout the screen material matrix (i.e., lucite, etc.). When radiant energy (X- and gamma-rays or UV or visible light) hits the screen, the screen glows in a manner similar to a fluoroscope screen. However, in this case, the screen will continue to glow when the source of radiant energy is removed.

The preliminary studies were concerned with a general screening program designed to evaluate the phosphorescent properties of several inorganic phosphor materials. These tests were somewhat subjective, since the human eye was used as the detector. Samples of the phosphors were exposed to a source of radiant energy at different wavelengths. The induced activation (glow) was measured by timing the decay of the visible light. The variables investigated included the time of decay, the effect of exposure period, and the wavelength of the excitation source. We have found several materials that appear suitable for information storage screens.

We have completed several tests on the fabrication of phosphor screens. Phosphors were selected on the basis of our initial exploratory program. The first experiments indicated that the distribution of the phosphor in the plastic film was not homogeneous, and the films tended to exhibit several pinholes. The physical characteristics of the film were good, however. In the second series of experiments, a thixotropic agent (finely divided silica) was used to disperse the phosphor evenly throughout the film. Here the uniformity of distribution was essentially perfect, but some small pinholes were still evident. We are planning to continue our work on the plastic-phosphor films and also to test some commercially available materials.

We have recently set up a cathode ray tube on which a steady, intensity-modulated pattern can be produced. The phosphor used in this tube is of the P4 type. This assembly will be used as the excitation source for tests of storage capability on our films.

SYSTEMS ENGINEERING APPLICATIONS - 08-03-02

A. Oceanographic Systems Study

Radionuclides appear to be useful tools to study sand transport phenomena and, although many experiments have been conducted to demonstrate their effectiveness as tracers, little is known concerning whether or not the dynamic systems in which they are used can be tagged well enough to achieve quantitative data leading to an understanding of basic mechanisms. The Radioisotope Sand Tracing (RIST) Study has progressed through equipment development to the point where important system tagging parameters can be studied.

Maintenance on the survey equipment in preparation for the June experiment at Point Mugu, California, is nearly complete. The spare detector assembly has been equipped with an electromechanical cable. The cable assembly is a duplicate of the one tested at Oceanside, California, with the exception of the cable splices which utilize a flexible potting material that equalizes water pressure. This pressure equalization prevents water from leaking along the teflon-coated wires into the housing that contains the detectors.

Present plans for the Point Mugu experiment include seven gold-198-199 injections, three point surface injections for investigation of the effect of particle size on transport, three plug injections for a study of activity concentration distribution as a function of depth, and one line injection for determining the zone of maximum transport. All of these experiments are planned to yield information that is applicable to volume transport.

A series of papers on the RIST program was presented at the Annual General Meeting of the American Geophysical Union recently held in Washington, D. C. ORNL personnel presented two papers titled "An Underwater Survey System for Radionuclide-Tagged Sediment Tracing" and "Processing and Analysis of Radioisotopic Sand Tracer (RIST) Study Data."

RADIATION PROCESSING APPLICATIONS

ORGANIC SYNTHESIS WITH ISOTOPIC SOURCES - 08-04-01

A. Straight Chain Fatty Acids

The chemical oxidation of oleic acid, a component of tall oil, yields pelargonic acid and azelaic acid, an important intermediate for alkyds. Ozone is used to produce these materials commercially.

$$\underset{\text{Oleic Acid}}{CH_3(CH_2)_7CH{=}CH(CH_2)_7CO_2H} \xrightarrow{O_x\cdot} \underset{\text{Pelargonic Acid}}{CH_3(CH_2)_7CO_2H} + \underset{\text{Azelaic Acid}}{HO_2C(CH_2)_7CO_2H}$$

The radiolytic oxidation of oleic acid was carried out under 1500 psi oxygen in a gamma flux (cobalt-60) of 6.8×10^6 R/hr for 4 hr. Four

milliliters of 50% oleic acid in acetic acid was used. The irradiated samples could not be analyzed on the gas-liquid chromatograph until oxidation products were converted to more volatile derivatives. This was accomplished by silylation to trimethylsilane ethers or esters. Thus far our irradiations under the conditions mentioned above show that we have only approximately 10% of the oleic acid remaining and the rest are oxidation products. By retention time on the gas-liquid chromatograph, it appears that we may have some pelargonic and azelaic acid. It will be necessary to separate sufficient amounts of material for infrared and mass spectral analyses for confirmation of the compound. Also we will be conducting additional radiations using different solvent systems in order to improve the oxidation yield.

RADIOISOTOPE SALES

A request for quotation was received from Radiochemical Centre, England, for kilocurie quantities of strontium-90. Shipments made during May include 34,506 Ci of tritium, 261,000 mCi of krypton-85, 182,500 mCi of xenon-133, 25 mg of elemental iodine-129, 15 mCi of methyl iodide, a 3.119-g cerium rod, and one carbon-14 target.

Table 3 gives the May 1970 cyclotron irradiations and runs for ORNL and non-ORNL customers.

Table 3. Cyclotron Irradiations and Runs for May 1970

Product	No. of Runs	Time (hr:min) Beam	Misc.	Total	Total Charges
ORNL Research Programs					
Gallium-67	2	3:00	2:30	5:30	$ 602.70
Indium-111	2	3:15	2:05	5:20	569.47
Technetium-95m	1	5:00	1:15	6:15	606.15
Total		11:15	5:50	17:05	$1,778.32
Non-ORNL Research Programs					
Bismuth-207	1	8:00	1:15	9:15	$1,498.68
Cobalt-56	1	3:00	1:15	4:15	680.10[a]
Germanium-68	1	8:00	1:15	9:15	1,532.59
Rubidium-84	2	14:30	2:55	17:25	3,820.87
Yttrium-87	2	5:00	2:30	7:30	1,220.20
Total		38:30	9:10	47:40	$8,752.44

[a]Purchased but not shipped.

The radioisotope sales proceeds and shipments for the first ten months of FY 1969 and 1970 are given in Table 4.

Table 4. Radioisotope Sales and Shipments

Item	7-1-68 thru 4-30-69	7-1-69 thru 4-30-70
Inventory items	$ 696,590	$ 521,782
Major products	80,620	92,634
Radioisotope services	200,236	289,367
Cyclotron irradiations	138,875	111,842
Miscellaneous processed materials	61,540	63,032
Packing and shipping	71,293	62,965
Total Radioisotope Sales	$1,249,154	$1,141,622
Total Radioisotope Shipments	2,342	2,142

A listing of outstanding large orders is shown below.

Isotope	Amount (Ci)	Customer
Cesium-137	~203,000	Brookhaven National Laboratory
Cesium-137	~174,300	American Nuclear Corporation[a]
Cesium-137	~77,000	Lockheed Georgia Company[a]
Cesium-137	120,000	Radiation Machinery Corporation[a]
Cesium-137	~186,800	Atomic Energy of Canada Limited
Cesium-137	40,000	Radiation Resources, Inc.[a]
Cesium-137	20,000	Radiochemical Centre, England
Cesium-137	200,001	CEA, France
Cesium-137	200,001	Radiation Resources, Inc.
Cesium-137	3,000	Miscellaneous orders
TOTAL	1,224,102	
Strontium-90	~532,000	Isotopes, Inc.
Strontium-90	~105,000	Isotopes, Inc.[a]
Strontium-90	~41,000	Brookhaven National Laboratory
Strontium-90	~556,982	U. S. Navy
Strontium-90	366,000	U. S. Atomic Energy Commission, Las Vegas
Strontium-90	3,000	Miscellaneous orders
TOTAL	1,603,982	
Promethium-147	5,100	Reactor Centrum Nederland
Promethium-147	5,001	Mitsubishi Corporation (Japan)
Promethium-147	100,001	McDonnell Douglas Astronautics Company[b]
TOTAL	110,101	
Tritium	15,000	Radiochemical Centre, England
Cobalt-60	6,200	Puerto Rico Nuclear Center

[a]Activity has been billed in previous fiscal years. Material is now being fabricated into sources or has already been fabricated into sources and is stored for future requests for shipments.
[b]Material is to be shipped from Richland, Washington.

RADIOISOTOPE PRODUCTION

CESIUM-137 PROCESSING

Nothing to report.

STRONTIUM-90 PROCESSING

Nothing to report.

GENERAL OPERATIONS

Nothing to report.

MAINTENANCE

Nothing to report.

SOURCE FABRICATION

A. Cesium-137

Four test sources loaded with inert CsCl were prepared. These sources were identical to the BNL-strip Type I sources and will be used for thermal cycling tests.

During fabrication of some high-density, thin-walled $^{137}CsCl$ sources[6] leaks were detected in five units after furnace testing at 400°C. In all five instances there were several small leaks detected in the welded zone. The source having the most leak points was defueled, and the welded area was sectioned for inspection. A total of 12 sections were taken in the general area of the leak points. Metallurgical inspection of these showed good quality and penetration in all cases; no unusual effects were seen. Although this type of inspection will not necessarily detect very small leaks, the indication is that there was no gross effect on the welded area.

B. Strontium-90

Nothing to report.

C. Miscellaneous Sources

Sources fabricated and shipped during May include a 330-mg carbon-14 target, an iridium-192 source containing approximately 50 Ci, and an approximately 6-Ci Y_2O_3 pellet.

---

[6]A. F. Rupp, Radioisotope Program (8000) Progress Report for March 1970, ORNL-TM-2965, Oak Ridge National Laboratory.

OPERATIONAL SUMMARY

	May 1970		FY 1970	
	Number	Amount (Ci)	Number	Amount (Ci)
Cesium-137				
HAPO shipments received	0	0	0	0
Product batches prepared	0	0	0	0
Sources fabricated	0	0	313	361,200
Special form containers	0	0	25	7,700
Strontium-90				
HAPO shipments received	0	0	0	0
Product batches prepared	0	0	16	646,000
Sources fabricated	0	0	0	0
Special form containers	0	0	40	332,900

PROCESS STATUS

Physical Inventory[a]

Item	Cesium-137 (Ci)	Strontium-90 (Ci)
In-process materials[b]	173,000	1,390,000
Products in storage	124,600	918,600
Sources in fabrication	296,400	0
Completed sources	162,000	422,900
Total	756,000	2,731,500

[a]Adjusted based on annual physical inventory May 1.
[b]Adjusted for expected process yields.

MISCELLANEOUS RADIOISOTOPE PROCESSING

Short-Lived Fission Products		Processed Units		Service Irradiations	
Radioisotope	Total (Ci)	Radioisotope	Total (mCi)	Type	Number
Xenon-133	800	Gallium-72	730	Antimony metal	1
Iodine-131	39	Bismuth-210	35	Antimony-123	1
		Calcium-47	30	Platinum-190	
		Rubidium-86	6552	Platinum-196	1
		Palladium-109	990	Y_2O_3	1
				Cesium-134	1
				Tungsten	1
				Fe-Ni	1
Total	839		8337		8

A special yttrium-91 run has been completed, but analysis is incomplete.

ADMINISTRATIVE SECTION

Travel by IDC personnel and visitors to the IDC are given in Tables 5 and 6.

Table 5. Travel by IDC Personnel

Site Visited	Purpose of Visit
Washington, D. C.	Participate in Study of Environmental Quality Information Programs
Richland, Washington	Discuss strontium and cesium shipments with Atlantic Richfield
Upton, New York	Attend meeting at BNL on cesium
Knoxville, Tennessee	Attend training session for MTST at IBM
Nassau Bay, Texas	Attend NASA conference on nonflammable materials at Manned Spacecraft Center
Gatlinburg, Tennessee	Attend annual meeting of Institute of Nuclear Materials Management
Dayton, Ohio	Join personnel from UCRL and Vanderbilt at Wright-Patterson Air Force Base to write paper on bismuth-206

Table 6. Visitors to IDC

Visitor's Affiliation	Subject Discussed
The Johns Hopkins Medical Institutions	Production of high specific activity barium-131, barium-133m, and barium-135m; production of gallium-67, indium-111, neodymium-140, and others; and tour cyclotron facilities
Institute V. Kernphysisch Amsterdam, The Netherlands	Yttrium-84, bromine-76, bromine-78, and nickel-61

INTERNAL DISTRIBUTION

1. A. L. Allen
2. M. A. Baker
3. P. S. Baker
4. E. E. Beauchamp
5. G. E. Boyd
6-8. T. A. Butler
9. F. N. Case
10. J. A. Cox
11. F. L. Culler
12. W. C. Davis
13. J. S. Drury
14. J. H. Gillette
15. H. R. Gwinn
16. R. F. Hibbs
17. K. E. Jamison
18. Lynda Kern
19. E. H. Kobisk
20. E. Lamb
21. R. E. Leuze
22. J. L. Liverman
23. L. O. Love
24. W. S. Lyon
25. R. E. McHenry
26. F. M. O'Hara
27. W. W. Parkinson
28. J. J. Pinajian
29. M. E. Ramsey
30. S. A. Reynolds
31-32. R. A. Robinson
33. D. A. Ross
34. A. F. Rupp
35. R. W. Schaich
36. A. H. Snell
37. K. A. Spainhour
38. M. R. Skidmore
39-40. H. F. Stringfield
41. A. M. Weinberg
42. J. C. White
43-44. Central Research Library
45. Document Reference Section
46-50. Laboratory Records Department
51. Laboratory Records - RC

EXTERNAL DISTRIBUTION

52. G. A. Andrews, ORAU, Medical Division, Oak Ridge, Tennessee
53. Hal Atkins, Brookhaven National Laboratory, Upton, New York
54. D. S. Ballantine, AEC, Washington, D. C.
55-58. R. F. Barker, AEC, Washington, D. C.
59. N. F. Barr, AEC, Washington, D. C.
60. O. M. Bizzell, AEC, Washington, D. C.
61. C. R. Buchanan, AEC, Washington, D. C.
62. R. L. Butenhoff, AEC, Washington, D. C.
63. T. D. Chikalla, PNL, Richland, Washington
64. D. F. Cope, AEC Site Representative, ORNL
65. D. C. Davis, AEC, Oak Ridge, Tennessee
66. J. C. Dempsey, AEC, Washington, D. C.
67. W. K. Eister, AEC, Washington, D. C.
68. E. E. Fowler, AEC, Washington, D. C.
69. J. D. Goldstein, AEC, Washington, D. C.
70. A. Gottschalk, Argonne Cancer Research Hospital, Chicago, Illinois
71. F. D. Haines, AEC, Washington, D. C.
72-74. J. E. Hansen, PNL, Richland, Washington
75. J. W. Irvine, MIT (Consultant)
76. J. Lawrence, Lawrence Radiation Laboratory, Berkeley, California
77. J. E. Machurek, AEC, Washington, D. C.
78. J. N. Maddox, AEC, Washington, D. C.
79. J. C. Malaro, AEC, Washington, D. C.
80. W. E. Mott, AEC, Washington, D. C.
81. J. A. Powers, AEC, Washington, D. C.
82. G. J. Rotariu, AEC, Washington, D. C.

83. B. A. Ryan, AEC, Richland, Washington
84. W. D. Sandberg, AEC, Aiken, South Carolina
85. S. J. Seiken, AEC, Washington, D. C.
86. R. W. Shivers, AEC, Washington, D. C.
87. P. E. Smith, ARHCO, Richland, Washington
88. L. G. Stang, Jr., BNL, New York
89. G. Taplin, University of California, Los Angeles, California
90-95. D. H. Turno, SRL, Aiken, South Carolina
96. A. R. Van Dyken, AEC, Washington, D. C.
97. Laboratory and University Division
98-112. Division of Technical Information Extension