CENTRAL RESEARCH LIBRARY
DOCUMENT COLLECTION

OAK RIDGE NATIONAL LABORATORY
operated by
UNION CARBIDE CORPORATION
NUCLEAR DIVISION
for the
U.S. ATOMIC ENERGY COMMISSION

LOCKHEED MARTIN ENERGY RESEARCH LIBRARIES
3 4456 0514223 5

ORNL-TM-3080

43

RADIOISOTOPE PROGRAM (8000) PROGRESS REPORT FOR JUNE 1970

A. F. Rupp

OAK RIDGE NATIONAL LABORATORY
CENTRAL RESEARCH LIBRARY
DOCUMENT COLLECTION
LIBRARY LOAN COPY
DO NOT TRANSFER TO ANOTHER PERSON
If you wish someone else to see this document, send in name with document and the library will arrange a loan.
UCN-7959
(3 - 3-67)

NOTICE This document contains information of a preliminary nature and was prepared primarily for internal use at the Oak Ridge National Laboratory. It is subject to revision or correction and therefore does not represent a final report.

LEGAL NOTICE

This report was prepared as an account of Government sponsored work. Neither the United States, nor the Commission, nor any person acting on behalf of the Commission:

A. Makes any warranty or representation, expressed or implied, with respect to the accuracy, completeness, or usefulness of the information contained in this report, or that the use of any information, apparatus, method, or process disclosed in this report may not infringe privately owned rights; or

B. Assumes any liabilities with respect to the use of, or for damages resulting from the use of any information, apparatus, method, or process disclosed in this report.

As used in the above, "person acting on behalf of the Commission" includes any employee or contractor of the Commission, or employee of such contractor, to the extent that such employee or contractor of the Commission, or employee of such contractor prepares, disseminates, or provides access to, any information pursuant to his employment or contract with the Commission, or his employment with such contractor.

ORNL-TM-3080

Contract No. W-7405-eng-26

Isotopes Development Center

RADIOISOTOPE PROGRAM (8000) PROGRESS REPORT FOR JUNE 1970

A. F. Rupp

Work Sponsored by
AEC Division of Isotopes Development

AUGUST 1970

OAK RIDGE NATIONAL LABORATORY
Oak Ridge, Tennessee
operated by
UNION CARBIDE CORPORATION
for the
U.S. ATOMIC ENERGY COMMISSION

LOCKHEED MARTIN ENERGY RESEARCH LIBRARIES

3 4456 0514223 5

CONTENTS

Page

RADIOISOTOPE PRODUCTION AND MATERIALS DEVELOPMENT 1

NEUTRON PRODUCTS - 08-01-01 1

A. Biomedical Radioisotopes 1

1. Thulium-171 1
2. Phosphorus-33 1
3. Potassium-43 2
4. Ruthenium-97 2

B. Research Radioisotopes 3

1. Lanthanum-137 3

C. Isotopic Power 3

1. Thulium-170 3

D. Supporting Technology 4

1. Radioisotope Characterization 4
2. Radioisotope Special Analysis and Quality Control 4

E. Neutron Products Pilot Production 5

CYCLOTRON PRODUCTS - 08-01-02 5

A. Biomedical Radioisotopes 5

1. Rubidium-83 5
2. Rudibium-84 5
3. Indium-111 6
4. Gallium-67 7
5. Neodymium-140 8

B. Miscellaneous 8

1. Technetium-95m 8

C. Cyclotron Pilot Production 9

FISSION PRODUCTS - 08-01-03 9

A. Krypton-85 Enrichment 9

B. Cesium-137 Process and Product Technology 10

1. Cesium-137 Process Study 10
2. Cesium-137 Product Study 10
3. Cesium Source Testing 13

Page

C. Cesium-137 Pilot Production 14

1. Processing and Process Status 14
2. Operational Summary 14
3. Outstanding Large Orders 14
4. Source Fabrication 14

D. Strontium-90 Pilot Production 15

1. Processing and Process Status 15
2. Operational Summary 15
3. Outstanding Large Orders 15
4. Source Fabrication 15

E. Short-Lived Fission Products Pilot Production 15

RADIATION SOURCE DEVELOPMENT - 08-01-04 16

A. Strontium-90 Silicate Sources 16

1. Matrix Studies 16
2. Encapsulation 16
3. Characterization 16

B. Fabrication of Carbon-14 and Technetium-99 Radiographic Sources 16

C. Alpha Source Fabrication Development 16

D. Miscellaneous Source Fabrication 16

E. Determination of Thickness of Erbium Metal Coatings on Molybdenum 16

F. Gadolinium-153 18

RADIOISOTOPE SOURCE SAFETY TESTING - 08-01-04 18

A. Special Form Prototype Testing 18

B. Testing Sources with Manufactured Leaks 18

C. Surveillance of Regulations and Cask Evaluations 18

D. Source Leak Test Guide 18

E. Sealed Source Testing 18

F. Unsealed Source Testing 18

Page

TECHNOLOGY UTILIZATION - 08-01-05 24

A. Information Center 24

B. Isotopes and Radiation Technology 24

C. Publications 24

RADIOISOTOPE APPLICATIONS DEVELOPMENT 26

BASIC TECHNOLOGY DEVELOPMENT - 08-03-01 26

A. Liquid Scintillation Development 26

1. Alpha Radiation Damage in Phosphors 26
2. Cerenkov Counting 26
3. Information Storage on Phosphor Screens 26

SYSTEMS ENGINEERING APPLICATIONS - 08-03-02 26

A. Oceanographic Systems Study 26

B. National Security 27

RADIATION PROCESSING APPLICATIONS 27

ORGANIC SYNTHESIS WITH ISOTOPIC SOURCES - 08-04-01 27

A. Straight Chain Fatty Acids 27

RADIOISOTOPE SALES 27

ADMINISTRATIVE SECTION 28

RADIOISOTOPE PROGRAM (8000) PROGRESS REPORT FOR JUNE 1970

A. F. Rupp

RADIOISOTOPE PRODUCTION AND MATERIALS DEVELOPMENT

NEUTRON PRODUCTS - 08-01-01

A. Biomedical Radioisotopes

1. Thulium-171

Nothing to report.

2. Phosphorus-33

The purpose of this project is to develop methods of preparing hundred-millicurie quantities of carrier-free phosphorus-33 containing $\leq 5\%$ phosphorus-32. This radioisotope of phosphorus has a lower energy beta and a longer half-life than phosphorus-32, making it useful for autoradiography work in biochemistry, agriculture, and metallurgy.

Two methods of preparing phosphorus-33 are being evaluated. One method is the irradiation of sulfur-33 enriched to greater than 92% sulfur-33 in a fast neutron flux to prepare the radioisotope by the $^{33}S(n,p)^{33}P$ reaction. The other method of preparation is the fast neutron irradiation of chlorine-36 to prepare phosphorus-33 by the $^{36}Cl(n,\alpha)^{33}P$ reaction. Highly enriched targets are necessary to reduce the phosphorus-32 content of the phosphorus-33 produced from either of the targets. The progress on each method of production is discussed below.

An 873-mg $K_2{}^{33}SO_4$ target[1] (enriched to 92.0% sulfur-33 and depleted to 7.53% sulfur-32) was removed from the reactor and the phosphorus-33 separated to fill orders. This target was irradiated to an integrated fast flux of $\simeq 1.6 \times 10^{21}$ n/cm^2 and contained approximately 715 mCi of phosphorus-33 with ≤ 40 mCi of phosphorus-32 at end of bombardment based on analysis of the original dissolver solution. A total of 500 mCi of phosphorus-33 was transferred to the Sales Department after decay and chemical separation (chemical yield = 97.4%). A total of 827 mg of target material was recovered in its original form, $K_2{}^{33}SO_4$, and re-encapsulated for re-irradiation. It is believed that most of the 46 mg difference is associated with recovery process waste solutions which will be saved and combined in future recovery processes.

---

[1]A. F. Rupp, Radioisotope Program (8000) Progress Report for February 1970, ORNL-TM-2910, Oak Ridge National Laboratory, p. 2.

3. Potassium-43

The objectives of this project are: to prepare potassium-43 by the $^{43}Ca(n,p)^{43}K$ reaction, using isotopically enriched ^{43}CaO targets, in quantities sufficient for medical and biological experiments; to define a method for separating potassium-43 from the target in a purity suitable for medical use; and to establish cooperative programs with medical institutions interested in evaluating its usefulness.

Potassium-42 has been used, primarily in animals, to locate tumors, to tag red blood cells, and to study blood flow, but it has very limited use in humans because of its high beta energy (3.53 MeV), its high-energy (1.52 MeV) gamma ray, and its relatively short half-life (12.4 hr). Potassium-43, with a half-life of 22.4 hr and gamma-ray emissions of 0.373 and 0.617 MeV, is more suitable for metabolic and clinical studies, because the lower dose rate would permit multiple doses. It has been suggested as a possible tool for studying blood flow through the heart and for diagnosing myocardial infarctions or immune rejection of transplanted organs. It has also proved capable of diffusing through a kidney with greatly reduced renal function, providing a good image of this organ.

A target of 89.9 mg of enriched (approximately 63%) ^{43}CaO was irradiated for 65 hr providing 9.5 mCi of potassium-43 at time of shipment. Shipments were made to Johns Hopkins and University of Mississippi Medical Center under our cooperative programs. The ion-exchange system was identical to that used previously, but the potassium-43 eluted more sharply than in previous runs, which may indicate the HCl was of slightly higher normality than the usual 0.5 N. It was eluted in 48 to 52 column volumes (150-160 ml).

A recovery was made of four targets processed previously. The oxalate precipitation gave a yield of greater than 90% of the enriched target material. There was some uncertainty as to the exact mass balance because of unweighed samples withdrawn from the targets and the 90% recovery yield is probably the lower bound on the measured recovery.

4. Ruthenium-97

Ruthenium-97 (2.9 days) decays by electron capture and emits principal gamma rays of 215 keV (91%) and 325 keV (11%) and higher energy gammas of less than 1% abundance to technetium-97 (2.6×10^6 years). The gamma transitions have low conversion coefficients, and their energy and abundance, coupled with the convenient half-life, make this radionuclide promising for scanning applications.

The purposes of this study are to develop the methods for preparing and processing ruthenium-97, derive the production parameters required to establish costs, and characterize the product. An adjunct to these objectives is the establishment of a cooperative program with the Upstate Medical Center of the State University of New York in which the material produced is supplied for evaluation of the biological applications.

In an attempt to shorten the target dissolution time, isotopically enriched (94%) ruthenium-96 metal was converted to the $^{96}RuO_2$ form by the same extraction process used for the previous product.[2] Ruthenium dioxide is soluble in concentrated HCl provided it is not fired above approximately 250°C. A target consisting of 4.0 mg of $^{96}RuO_2$ was irradiated seven days in a thermal flux of approximately 2×10^{15} n/cm^2.sec to make ruthenium-97. The RuO_2 target would not dissolve completely in HCl and alkaline hypochlorite had to be used. The dioxide dissolves in hypochlorite considerably faster than the metal does, so that the dioxide target does reduce cell processing time.

Difficulty was encountered in the processing because of a manipulator failure just at the point of the solvent extraction of RuO_4 into the CCl_4. The solution had been acidified with HNO_3 and by the time the manipulator was repaired the following day the RuO_4 would no longer extract, presumably due to formation of inextractable nitrosyl compounds. The ruthenium-97 was then recovered by distilling the tetroxide from an acid permanganate solution using an ethanol-HCl mixture to trap the ruthenium-97. Despite the loss of one half-life because of processing difficulties, 47 mCi of ruthenium-97 was shipped to Upstate Medical Center of the State University of New York under a cooperative program. The product activity was observed with a Ge(Li) detector and the only other activity seen was ruthenium-103 equaling 2% of the ruthenium-97 activity at the time of shipment. The ruthenium-103 activity is high enough to make the product unacceptable for human use. It appears that reduction of ruthenium-102 in the enriched target by a factor of approximately 5 would provide a product suitable for human use. The target material presently available contains 1.2% ruthenium-102.

B. Research Radioisotopes

1. Lanthanum-137

Nothing to report.

C. Isotopic Power

1. Thulium-170

The objectives of this research are to provide sufficient data on thulium-170, which has been proposed as an isotopic power source for short-duration missions, to permit reasonable assessment of its potential application, and to permit preliminary engineering design of power sources. The economics for reactor production of thulium-170 (128.5 day; $E_{\beta^-_{av}} = 0.32$ MeV) from natural thulium-169 are favorable and the sesquioxide offers a promising fuel compound, having a practical specific power of approximately 2 W/g and a power density of approximately 16 W/cm^3. The study will include measurements of thermal conductivity and thermal diffusivity, leach rates for safety analysis, high-temperature compatibility with suitable containment metals, vapor pressure, and fuel form densification.

[1]A. F. Rupp, Radioisotope Program (8000) Progress Report for April 1970, ORNL-TM-2993, Oak Ridge National Laboratory, p. 3.

Work on the thulium compatibility specimens was delayed by the strike. The four slugs containing $^{170}Tm_2O_3$ irradiated at Savannah River to approximately 3 W/g were received. The first irradiation slug containing Tm_2O_3 wafers prepared by Sanders Nuclear Corporation's (SNC) proprietary process was opened and more than half the wafers were found in broken condition. The wafers do not appear to be especially fragile and the breaking is most likely due to thermal shock rather than mechanical shock. Savannah River had expressed concern over the stratified appearance of the SNC proprietary wafers and their ability to withstand the thermal shock of several hundred degrees centigrade when shutdown occurs. The wafers appeared to crack along transverse strata so that in several cases two half-thickness wafers resulted which were otherwise not broken. The wafers also tended to swell unevenly in thickness. Pictures have been taken to document the condition of the wafers. Revision in the planned compatibility study will be necessary, and it is doubtful that there is much value in studying compatibility of these specimens since they do not survive irradiation.

The remaining irradiation slugs will be opened in July and compatibility couples will be assembled.

D. Supporting Technology

1. Radioisotope Characterization

Nothing to report.

2. Radioisotope Special Analysis and Quality Control

The survey has been completed for the Ad Hoc Panel on National Uses and Needs for Standard Radioactive Materials of the National Research Council. A draft of the Panel's report has been sent to the members for their final revisions. The summary of the present version follows.

This report contains information on uses for standard radioactive materials in various fields and the present status of such materials in the United States. There are many suppliers, and their calibrations are in most cases unrelated; there is no regulation of this activity. The report is largely concerned with the results of a survey to determine present and future needs. Several hundred people actively engaged in work requiring standards were queried by questionnaire and personal interview. Major attention was given the biomedical and environmental sciences. The panel members are specialists in a variety of disciplines, who also have knowledge of radioactivity measurements and standards. The National Bureau of Standards (NBS), as the statutory source of calibrations for the nation, is the focal point of these considerations. It is recommended that NBS exercise leadership in improving the quality of standards and calibrations through extension of its "Pilot" program to radionuclides. Because of the small volume of sales of radioactivity standards, it is not feasible for commercial suppliers, competent as they are, to do unaided the extensive research and tedious measurements required for primary standardization. Since interest is growing among professional

societies and other organizations, it is recommended that an office be set up at NBS or another appropriate site to gather information and coordinate activities. Fourteen nuclides, including xenon-133, technetium-99m, and selenium-75, were found to be of immediate importance, and NBS is requested to give priority to preparation of standards of those materials. All suppliers are urged to intensify quality-control efforts and to supply complete information about their products to permit intelligent use.

E. Neutron Products Pilot Production (Production and Inventory Accounts)

Processed Units		Service Irradiations	
Radioisotope	Total (mCi)	Type	Number
Palladium-109	894	Platinum-196	3
Tantalum-182	493	Y_2O_3	2
Barium-131	26	Tungsten	1
Copper-67	12	Gold	2
Calcium-47	5	Chromium seeds	1
		Copper bar	1
	1430		10

CYCLOTRON PRODUCTS - 08-01-02

A. Biomedical Radioisotopes

1. Rubidium-83

Nothing to report.

2. Rubidium-84

The objectives of this program are to improve the technology for the production of higher purity rubidium-84. Rubidium-84 is regularly produced by the ORNL Isotopes Division by proton bombardment of natural krypton targets, but this product is unsuitable for positron camera scanning due to appreciable amounts of rubidium-84 produced simultaneously. The activity of the rubidium product obtained from proton bombardment of natural krypton in the ORNL 86-Inch Cyclotron is comprised of 9.7% rubidium-83 (83 days), 68% rubidium-84 (33 days), and 22% rubidium-86 (18.7 days) at end of bombardment. The longer half-life of rubidium-83 reduces the $^{84}Rb/^{83}Rb$ ratio even further with time. Appreciable amounts of rubidium-83 are undesirable for positron scintigraphy, because its principal gamma emissions [521 keV (46%), 530 keV (31%), and 553 keV (16%)] are similar enough in energy to the 511-keV annihilation radiation of rubidium-84 (intensity = 42%) to prevent energy resolution by the positron camera, thereby leading to increased background and loss of spatial resolution. Interest in using rubidium-84 for myocardial scanning with a positron camera has prompted the search for a higher purity product.

Another rubidium-84 production run with the enriched krypton-84 target described last month[3] was performed during June. The product composition and production parameters for this latest production run were comparable to those reported earlier. Some difficulty was encountered during the hot-water leach procedure[4] used to recover the rubidium-84 from the aluminum target holder. The major portion of the activity subsequently had to be removed using a hot dilute acid (0.1 M HCl) leach. Acid leaching is undesirable for it not only chemically attacks the target holder but also contaminates the product with appreciable amounts of aluminum. An attempt was made to determine whether the formation of an oil film, possibly originating from the vacuum system used to transfer the krypton gas, on the surface of the target holder might be causing the difficulty, but the results were inconclusive. The identification and rectification of the causes for this random behavior (the rubidium product in only one of the last four production runs would not hot-water leach) are unknown at present, but they will be investigated further if this behavior is encountered again.

3. Indium-111

The objectives of this program are twofold: (1) to elucidate, define and optimize pertinent production parameters (cyclotron target material, cyclotron beam energy and current conditions, adverse side reactions leading to undesirable isotopic impurities, target processing and product purification procedures, and target recovery, if necessary) and (2) to make sufficient material available to cooperative participants for their evaluation of indium-111 as a diagnostic radionuclide in medicine. Such applications would include spinal-cerebral cisternography, aerosol lung studies, delayed brain scanning, visualization of the lymphatic system, metabolic studies of indium-labeled macroaggregates and colloids, and possible applications for tumor localizations. Indium-111 has both a favorable decay scheme [gamma emissions of 173 keV (89%) and 247 keV (94%)] ideally suited for external detection and an optimal half-life (2.81 days) for labeling and distribution studies which must be carried out over 24 hr or longer. The use of indium in such lengthy studies is currently impossible with the indium-113m (1.73 hr) isotope now in general use.

Additional operating experience on the HBr-isopropyl ether extraction process for indium-111 purification was obtained during June. Only one indium-111 development run was performed with approximately 115 mCi being supplied to medical cooperative participants for their application and evaluation.

The USAEC was petitioned during June for permission to routinely produce and sell this radionuclide as an experimental product for development and evaluation. The establishment of an interim price of $18/mCi was suggested on the basis that orders to be accumulated until the sale of a minimum-size batch of approximately 65 mCi is assured. The effect of

---

[3]A. F. Rupp, Radioisotope Program (8000) Progress Report for May 1970, ORNL-TM-3020, Oak Ridge National Laboratory, p. 4.
[4]A. F. Rupp, ORNL-TM-2910, p. 7.

such a limited production policy on prospective clinical users - who must be assured of a dependable supply of frequent, small-to-moderate sized deliveries in order to justify extensive clinical research - is uncertain at present and must be considered in the overall market development of this radionuclide. The total indium-111 production and distribution to medical cooperative participants for the last half of FY 1970 will be tabulated and reported in July.

4. Gallium-67

The objectives of this program are to determine the optimal target configuration for gallium-67 (78 hr) production in acceptable purity and quantity and to provide gallium-67 for clinical applications research and development. Interest in this isotope has been spurred by evidence, obtained by the Medical Division of Oak Ridge Associated Universities (ORAU), of a high uptake of carrier-free gallium-67 by lymphoid tumors in both animals and humans. This interesting discovery was made during the evaluation of gallium-67 as a bone-scanning agent for a patient with Hodgkin's disease and has since been successfully extended to a clinical study of several types of malignant neoplasms. Additional animal studies have been performed by the ORAU group indicating that it is the viable rather than necrotic tumor cells in mice and rats that are mainly responsible for uptake of gallium-67. Autoradiographic studies of rat tumors indicate it is chiefly located in tumor cytoplasm. Their results suggest that gallium-67, with its remarkable ability to concentrate in living malignant cells, may be useful for both clinical diagnosis and in studies of the nature of malignant change.

Gallium-67 decays by electron capture with the emission of four main gamma rays of 93, 184, 296, and 388 keV with intensities of 40, 23, 20, and 8%, respectively. Carrier-free gallium-67 is produced by the $^{68}Zn(p,2n)^{67}Ga$ reaction by bombarding natural, high purity zinc tubing targets (0.375-in. OD by 0.020-in. wall thickness) with 22-MeV protons in the ORNL 86-Inch Cyclotron. Irradiation of natural zinc also produces appreciable amounts of gallium-66 (9.5 hr) that must be allowed to decay before human use.

Three gallium-67 preparations were made and shipped to ORAU during this period, and nine smaller orders were filled for clinicians interested in the application of this radionuclide in their studies. The total gallium-67 production for the second quarter of 1970 is shown in Table 1.

Table 1. Experimental Gallium-67 Preparations Made During the Quarter Ending June 30, 1970

Month	Number of Process Runs	Number of Shipments	Amount[a] of ^{67}Ga Shipped (mCi)
April	2	5	215
May	2	6	251
June	3	12	315
Total	7	23	781

[a]Data calculated as of 8:00 AM on the day following shipment to be consistent with the ORNL decay allowance policy.

Additional operating experience on the HCl-isopropyl ether extraction process for gallium-67 purification was obtained. All pertinent production and processing parameters were similar to those reported in May.[5] The use of this product in humans makes product characterization and quality control very important and necessary items. In an attempt to completely characterize the chemical composition of the product being produced by this ether extraction process, an aliquot of a typical final product has been submitted for spark-source mass spectrometric analysis. The results of this analysis will be reported as soon as it is completed.

5. Neodymium-140

Nothing to report.

B. Miscellaneous

As part of a continuing effort to assist cooperative participants and customers to fill specialized requirements for specific radionuclides not usually available, miscellaneous short-term tasks are occasionally undertaken. The demand or potential usefulness of these radionuclides is not considered adequate to justify extensive effort or a continuing development program, but the services performed are valuable to meet program objectives.

1. Technetium-95m

Considerable interest was expressed by two medical cooperative participants in obtaining a few millicuries of a long-lived, carrier-free technetium isotope (e.g., technetium-95m, 61 days) to study (1) the basic chemistry involved in the tagging of organic molecules with pertechnetate ions and (2) the long-term metabolism in animals of several specific technetium-tagged compounds. Technetium-99m (6.0 hr) is currently the only technetium radionuclide commercially available, but it is too short-lived for extended biological and chemical tagging studies.

Carrier-free technetium-95m was produced by bombarding a 1/4- by 6-in. natural molybdenum tube with 22-MeV protons (average beam current $\simeq$ 315 μA) in the ORNL 86-Inch Cyclotron. Using this target configuration, technetium-95m was produced by both the $^{95}Mo(p,n)^{95m}Tc$ and $^{96}Mo(p,2n)^{95m}Tc$ nuclear reactions, along with appreciable amounts of other technetium radionuclides [e.g., technetium-96 (4.3 days) and technetium-97m (90 days)] formed by (p,xn) reactions on other naturally occurring molybdenum isotopes. Since the product was not destined for *in vivo* human use, the presence of other technetium radionuclides was not considered troublesome. A thick-target production rate and cyclotron yield for technetium-95m of approximately 13 mCi/mA-hr and approximately 4.1 mCi/hr, respectively, were determined for this target configuration.

---

[5]A. F. Rupp, ORNL-TM-3020, p. 6.

The molybdenum tube target was dissolved in 30% H_2O_2, and the carrier-free technetium activities extracted from the aqueous phase (previously adjusted to 2 M NaOH) with 2,4-dimethyl pyridine (lutidine). The technetium activities were back-extracted into water by adding benzene to the organic phase. The product was evaporated to approximately 20% its original volume in order to steam-distill any traces of organic contaminants.

C. Cyclotron Pilot Production (Production and Inventory Accounts)

Table 2 gives the June 1970 cyclotron irradiations and runs for ORNL and non-ORNL customers.

Table 2. Cyclotron Irradiations and Runs for June 1970

Product	No. of Runs	Time, hr:min Beam	Misc.	Total	Total Charges
		ORNL Research Programs			
Bismuth-205	1	4:00	1:00	5:00	$ 482.00
Cobalt-61	1	1:30	1:10	2:40	263.33
Gallium-67	4	11:55	5:00	16:55	1,425.00
Indium-111	1	2:00	1:15	3:15	340.15
Total		19:25	8:25	27:50	$2,510.48
		Non-ORNL Research Programs			
Iron-55	1	15:00	1:15	16:15	$2,468.22[a]
Rubidium-84	1	6:50	1:15	8:05	1,724.99
Yttrium-87	3	6:00	3:45	9:45	1,620.30
Total		27:50	6:15	34:05	$5,813.51

[a]Purchased but not shipped.

FISSION PRODUCTS - 08-01-03

A. Krypton-85 Enrichment

No transfers of krypton either between units or into or out of a unit were made this month.

There appears to be a very small leak at the extreme end of column C (see Fig. 1), probably in the tubing fittings at the bellows pump. This has caused a decrease of pressure by venting off depleted ends, but the total activity seems to be holding. The product of this column will be withdrawn and the leak repaired. The present status of the six cascades is shown on page 10. The count rate indicates the level of enrichment.

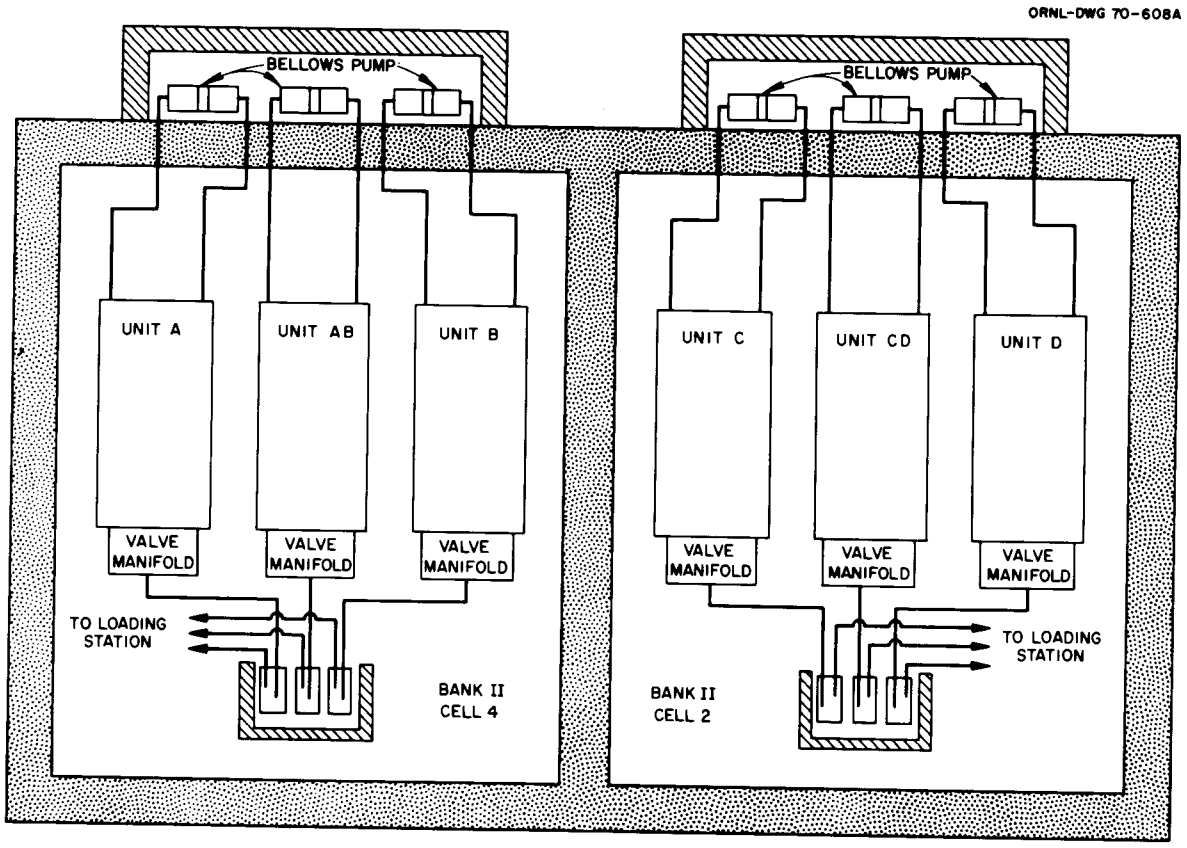

Fig. 1. Schematic Arrangement of Krypton-85 Columns.

Unit	Activity in Unit (Ci)	Time Since Last Product Removal (days)	Count Rate in Product Section (counts/min) May 1970	June 1970
A	--	44	--	--
AB	1345	93	7550	7700
B	1224	93	6300	6550
C	1145	183	6000	5950
CD	1757	94	7950	7900
D	1273	131	7150	8900

B. Cesium-137 Process and Product Technology

1. Cesium-137 Process Study

The purpose of this task is the study and development of economical processes for recovery, purification, and conversion of cesium-137.

In view of the high purity feed material (approximately 98 wt % Cs) that is expected to arrive in the near future from ARHCO, a study is underway to develop a workable and economic process which can make use of as much of the present FPDL facilities as possible. To begin with, a number of

important factors were defined in the preliminary selection of eluants and process designs. Reactions involved in various process steps were considered next. This was followed by an investigation of the characteristics of chemical compounds (eluant, intermediate products, etc.) associated with different processes. Tentative process flowsheets are being prepared, and an experimental program is being drafted to evaluate the technical feasibility of the selected processes.

The factors used in the selection of eluants and process designs include (a) the elution efficiency, (b) corrosion of the process equipment, (c) ease of separation of the final product, and (d) the overall recovery of cesium-137. Among the eluants considered were NH_4Cl, $(NH_4)_2CO_3$-NH_4OH, and $(NH_4)_2SO_4$. Although the elution characteristics of NH_4Cl have not been evaluated as yet, it appears most attractive in consideration of the simple process that can be developed, consisting of only two major process steps (i.e., elution and fractional crystallization with evaporation to dryness). The process based on the eluant $(NH_4)_2CO_3$-NH_4OH and its economic advantage have been presented in earlier reports. Ammonium sulfate is known to be thermally and radiochemically more stable than other ammonium salts, and the process using this eluant would be essentially the same as the present FPDL process. However, this may mean that the process would be economically less attractive because of the number of steps required.

2. Cesium-137 Product Study

The purpose of this task is to develop and improve cesium-137 source forms and to characterize the source forms for operational and safety requirements.

The objective of the current study is to find a means of eliminating the solid-solid phase transition which occurs at 469°C with an accompanying volume increase.

The experimental work to determine differential thermal analysis (DTA) thermograms for the CsCl-KCl system covering the range from 0-100% KCl has been completed. Important phase transition characteristics for the mixtures having 0-20 mole % KCl contents were presented earlier.[6] Table 3 summarizes the same type of information for mixtures containing 25 to 100 mole % KCl.

It is to be noted in Table 3 that no apparent solid-solid transition was observed on the DTA thermograms for the mixtures listed. However, this statement may not be applicable to mixtures with 60-80 mole % KCl as discussed later. The melting point is seen to decline continuously with increasing KCl content until it reaches a minimum of 600°C at approximately 35 mole % KCl. Above this concentration, the melting point increases rather rapidly to 752°C when the KCl content reaches 95 mole %.

[6]A. F. Rupp, ORNL-TM-3020, p. 10.

Table 3. Phase Transition Characteristics of CsCl-KCl Mixtures[a] with Intermediate to High KCl Content

KCl Content		Solid-Liquid Transition Peak Temperature[b] (°C)		
Mole %	Wt %	Melting	Freezing	Width of Hysteresis
25	12.9	607	602	5
30	16.0	605	597	8
35	19.3	600	595	5
40	22.8	602	590	12
45	26.6	605	591	14
50	30.7	606	596	10
60	39.9	608	623 598	
70	50.8	c	652 601	
80	63.9	696	692 606	
90	80.0	734	713	21
95	89.4	752	741	11
100	100.0	766	759	7

[a]Mixtures that have been previously molten.
[b]Average value.
[c]Melting peak is not clearly defined.

The melting peak for the 70 mole % KCl-CsCl is not clearly defined. The broad transition area exhibited on the thermogram for this mixture in the temperature range 600-700°C suggests the possibility that a simultaneous melting and endothermic reaction of some type may be taking place.

The freezing point of the CsCl-KCl system follows a trend similar to that of the melting point although the minimum (590°C) occurs at a somewhat higher KCl content (approximately 40 mole % KCl). On the other hand, the width of hysteresis (the difference in temperature between the melting and freezing points) appears to have a tendency of tapering off toward both extremes of the composition. The twin peaks that appear between 600 and 700°C on cooling the mixtures with 60-80 mole % KCl may represent either fractional crystallization and freezing of two different phases or freezing of the melt followed by a solid-phase transition.

The complex behavior displayed by the CsCl-KCl system on the DTA thermogram has never been reported in the open literature. Since the thermogram reveals no specific crystal structure of a substance in phase transition, the DTA result must be supplemented by the structure data from other techniques (such as the X-ray diffraction method) to understand the complex phase behavior of the CsCl-KCl system.

An experimental program to obtain such structure data was initiated in May[7] by subjecting CsCl-KCl mixtures of three selected compositions (1, 2, and 50 mole % KCl) to various "heat treatments" in a muffle furnace. The samples were subsequently quenched by air at room temperature and their crystal structues determined by the ordinary (room temperature) X-ray method. The same type of experiment continued this month by using pure CsCl as the sample with ice water and liquid nitrogen as the quenching agents to "freeze" the high temperature structure.

However, the diffraction patterns of all the samples indicate that whatever structure that existed at high temperatures appeared to have reverted to a structure at room temperature. Consequently, disappearance of the solid-solid transition peak on DTA thermograms for the CsCl-KCl mixtures could not be confirmed. This situation is probably attributable either to the ineffectiveness of the quenching techniques or to the "aging" of the samples from the time of quenching to the time of the X-ray analysis (approximately 24 hr or longer). This implies that the only effective way under the circumstances to confirm the structural transformation of the present system is to examine the mixture directly in a controlled environment over the temperature range of interest. Thus, two mixtures, 2 mole % KCl-CsCl and 70 mole % KCl-CsCl, have been selected for examination by the high-temperature X-ray technique. The results are not yet available.

A detailed analysis of the DTA thermograms for the CsCl-KCl system will be made, and a preliminary phase diagram for the system will be drafted.

3. Cesium Source Testing

To fulfill the obligation to test cesium sources (BNL strip type) for the U. S. Army Natick Irradiator, test equipment was constructed to thermally cycle sources between -80 and 120°C. The equipment consists of a small motor-driven cable that slowly lowers the source into a -80°C dry ice-trichloroethylene bath for 10 min and then raises the source into an electric tube heater at 300°C for 7 min.

Thermal cycle testing of the cesium sources (BNL strip type) was continued. The testing of source F-69 was completed without any indication of leaking after cycling 1991 times, which is equivalent to 5.5 years cycling in the Natick Irradiator.

Source F-66 was installed and has been cycled 1276 times or the equivalent of 3.5 years with no leaking.

---

[7]A. F. Rupp, ORNL-TM-3020, p. 10.

C. Cesium-137 Pilot Production (Production and Inventory Accounts)

1. Processing and Process Status

Item	Cesium-137 (Ci)
In-process materials[a]	173,000
Products in storage	124,600
Sources in fabrication	296,400
Completed sources	162,000
Total	756,000

[a]Adjusted for expected process yields.

2. Operational Summary

Cesium-137	June 1970		FY 1970	
	Number	Amount (Ci)	Number	Amount (Ci)
HAPO shipments received	0	0	0	0
Product batches prepared	0	0	0	0
Sources fabricated	0	0	313	361,200
Special form containers	0	0	25	7,700

3. Outstanding Large Orders

A list of outstanding large orders for cesium-137 is shown below:

Isotope	Amount (Ci)	Customer
Cesium-137	~203,000	Brookhaven National Laboratory
Cesium-137	~174,300	American Nuclear Corporation[a]
Cesium-137	~77,000	Lockheed Georgia Company[a]
Cesium-137	120,000	Radiation Machinery Corporation[a]
Cesium-137	~186,800	Atomic Energy of Canada Limited
Cesium-137	40,000	Radiation Resources, Inc.[a]
Cesium-137	20,000	Radiochemical Centre, England
Cesium-137	200,001	CEA, France
Cesium-137	200,001	Radiation Resources, Inc.
Cesium-137	3,000	Miscellaneous orders
TOTAL	1,224,102	

[a]Activity has been billed in previous fiscal years. Material is now being fabricated into sources or has already been fabricated into sources and is stored for future requests for shipments.

4. Source Fabrication

One 10-Ci cesium-137 source was fabricated during June.

D. Strontium-90 Pilot Production (Production and Inventory Accounts)

1. Processing and Process Status

Item	Strontium-90 (Ci)
In-process materials[a]	1,390,000
Products in storage	918,600
Sources in fabrication	0
Completed sources	422,900
Total	2,731,500

[a]Adjusted for expected process yields.

2. Operational Summary

Strontium-90	June 1970 Number	June 1970 Amount (Ci)	FY 1970 Number	FY 1970 Amount (Ci)
HAPO shipments received	0	0	0	0
Product batches prepared	0	0	16	646,000
Sources fabricated	0	0	0	0
Special form containers	0	0	40	332,900

3. Outstanding Large Orders

Isotope	Amount (Ci)	Customer
Strontium-90	150,001	Isotopes, Inc.
Strontium-90	~105,000	Isotopes, Inc.[a]
Strontium-90	~556,982	U. S. Navy
Strontium-90	366,000	U. S. Atomic Energy Commission, Las Vegas
Strontium-90	3,000	Miscellaneous orders
TOTAL	1,180,983	

[a]Activity has been billed in previous fiscal years. Material is now being fabricated into sources or has already been fabricated into sources and is stored for future requests for shipments.

4. Source Fabrication

Strontium sources fabricated during June included a 12-Ci strontium-90 source and a 1.2-Ci strontium-90 source.

E. Short-Lived Fission Products Pilot Production (Production and Inventory Accounts)

Eight-hundred curies of xenon-133 and 26 Ci of iodine-131 were processed during June.

RADIATION SOURCE DEVELOPMENT - 08-01-04

A. Strontium-90 Silicate Sources

1. Matrix Studies

Nothing to report.

2. Encapsulation

Nothing to report.

3. Characterization

Nothing to report.

B. Fabrication of Carbon-14 and Technetium-99 Radiographic Sources

Nothing to report.

C. Alpha Source Fabrication Development

Nothing to report.

D. Miscellaneous Source Fabrication

Two carbon-14 targets containing a total of 20 mCi were fabricated.

E. Determination of Thickness of Erbium Metal Coatings on Molybdenum

In response to a customer inquiry we are developing a technique of measuring by nondestructive analytical methods the thickness of erbium metal evaporated onto molybdenum with an error of less than ±2%. The molybdenum metal is of uniform thickness, but the coating of erbium ranges in thickness from 1.0 to 10 microns. Two approaches to the solution of the problem, both involving the use of low-energy X-ray sources, have been considered. The technique to be used is described in a paper.[8]

One approach is to measure the erbium L X ray which is produced by the absorption of the cadmium X ray in the erbium coating. Calculations indicate that the saturation thickness for this low-energy X ray (7.0 keV) is less than 10 microns; therefore, a thickness of erbium greater than approximately 7 microns cannot be measured by using this technique.

The method which is applicable to greater thicknesses of erbium (up to approximately 40 microns) utilizes the attenuation of the characteristic X ray of molybdenum in the erbium as a measure of the thickness of the

---

[8]R. S. Pressly, Design and Use of Low-Energy Gamma and X-Ray Sources, presented at Third Symposium on Low Energy X- and Gamma-Ray Sources and Applications, Boston College, Chesnut Hill, Massachusetts, June 10-12, 1970.

deposit. The molybdenum K_α X ray is excited by the interaction of cadmium K X rays with atoms in the molybdenum substrate. In our experimental evaluation of this method, the gamma radiation from 300 mCi of americium-241 is absorbed in cadmium to produce the characteristic K_α X ray of cadmium. The geometry of the source-to-target assembly is designed so that a collimated beam of cadmium X rays is directed toward the erbium-coated molybdenum where it will penetrate the coating and be absorbed in the molybdenum metal substrate. The thickness of the erbium deposit influences the observed count rate of the molybdenum X ray in two ways: the amount of cadmium X-ray beam striking the molybdenum is reduced as the thickness of the erbium coating increases and the amount of molybdenum X ray that is reflected is also reduced as this thickness increases.

The feasibility of measuring the thickness of the erbium coating with excellent resolution by the molybdenum K_α X-ray technique is indicated by the theoretical erbium absorption curve in Fig. 2. The count rate at zero thickness of erbium was obtained by the experimental determination of the molybdenum K_α X-ray peak intensity with the americium source, cadmium target, and molybdenum substrate in the precise geometrical relationship used in subsequent erbium thickness measurements. Points on the curve at 1-micron intervals were calculated by utilizing the absorption coefficient of the incident cadmium X ray and of the excited molybdenum K_α X ray in erbium. The slope of the curve indicates that 1 micron of erbium will result in a difference of 2000 counts accumulated for 4 min at the peak intensity; in practice, larger accumulation of counts and summation of counts under the peak will be done.

Samples of erbium-coated molybdenum have been analyzed by measuring the absorption of the excited molybdenum X ray transmitted back through the erbium coating with a lithium-drifted silicon crystal and analyzer having a 0.3-keV resolution of the 5.9-keV manganese X ray. These data have been recorded on punched tape to be analyzed by computer methods. The samples will be dissolved and the erbium content determined by gravimetric analyses. The calculated results, the gravimetric analyses results, and the computer-analyzed fluorescent X-ray results will be compared.

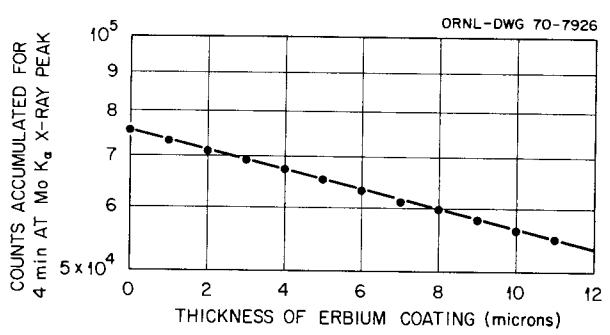

Fig. 2. Calculated Thickness of Erbium Coating as a Function of Molybdenum K_α X-Ray Peak Intensity.

F. Gadolinium-153

Separation of europium and gadolinium from spent HFIR control plates is continuing. The first pass separation is completed in which greater than 98% of the europium has been separated by electrolysis from the rare-earth mixture. Concentration of the gadolinum solution prior to precipitation as gadolinium oxalate is in progress. Traces of europium will be separated from the gadolinium to achieve greater than 99.9% radiochemical purity of gadolinium-153.

Gadolinium-153 sources will be fabricated for cooperative studies with Vanderbilt University, Oak Ridge Associated Universities, and the University of Wisconsin; each is involved with various external radiation beam techniques for medical applications: bone density determination, heart scans, and lung scans.

RADIOISOTOPE SOURCE SAFETY TESTING - 08-01-04

A. Special Form Prototype Testing

Nothing to report.

B. Testing Sources with Manufactured Leaks

Nothing to report.

C. Surveillance of Regulations and Cask Evaluations

Nothing to report.

D. Source Leak Test Guide

Nothing to report.

E. Sealed Source Testing

Nothing to report.

F. Unsealed Source Testing

Unsealed sources are tested to evaluate their ability to contain radioactive material under specified test conditions.

The evaluation of five $^{241}AmO_2$ sources received from PNL has been completed and is summarized in this report.

These sources have a 0.5-in.-diam by 25-μm-thick active layer of Cu-$^{241}AmO_2$. The backing is a copper strip, 0.625 x 0.625 x 0.030 in. The active surface is covered by a 24-μm layer of copper and the entire source is covered by a 5-μm layer of stainless steel. All layers were deposited by radiofrequency sputtering. Each source contains approximately 2 mCi of ^{241}Am.

Each source was smeared for removable contamination as it was taken from the shipping package and the results are shown below. The sources were cleaned further by light wiping and re-smeared giving the results shown in the last column. These values are the smear levels at the start of testing. The sources were then examined under a stereomicroscope and were seen to have numerous small surface pits, some of which exposed the underlying copper layer, and spattered material in the form of beads and ridges on the surface of the stainless steel later. Typical examples of these defects are shown in Figs. 3 through 5.

Source No.	Smear Results (dis/min) As Received	At Start of Testing
S-Am-250A	54	<30
S-Am-250B	114	<30
S-Am-250C	87	<30
S-Am-250D	267	60
S-Am-250E	600	<30

Two of the sources (S-Am-250D and S-Am-250E) were subjected to the tests for the least stringent classification in the ORNL Source Classification System (Class I-A). The tests and results are described in Section 1 below. The remaining three sources were subjected to tests that are not required as part of the Class I-A requirements but which were deemed desirable as a result of conversations between ORNL, PNL, and DID. These tests and results are described in Sections 2, 3, and 4. All of the sources were then subjected to the 24-hr leach test required by federal regulations (10 CFR 32) for calibration sources containing ^{241}Am; the results are given in Section 5.

Fig. 3. Surface Defect in Plated Source S-Am-250A (~177X).

1. ORNL Source Capsule Classification Tests

a. Class A Operating Temperature Test

Source S-Am-250E was heated in air for 24 hr at 212°F and then cooled to room temperature. The source smeared less than 30 dis/min and no visible damage was found. The source was then sealed in a bottle and immersed in an ice bath (32°F) for 24 hr. The smear was less than 30 dis/min and no visible damage was found.

Fig. 4. S-Am-250C After Elevated Temperature Test.

b. Class A Thermal Shock Test

Source S-Am-250E was heated to 212°F, then plunged into a bath of ice water (32°F), removed after one minute, and placed in a container of dry ice (-70°F) for 15 min. The smear was less than 30 dis/min and no visible damage was found.

c. Class A Maximum Temperature Test

Source S-Am-205E was heated in air at 400°F for 1 hr, then cooled to room temperature. The smear was less than 30 dis/min and no visible damage was found.

d. Class I Puncture Test

Source S-Am-250D was placed with the active surface on the 1/8-in.-diam pin and a 2-g weight was dropped from a height of 3 ft, striking the opposite side of the source. The source smeared 60 dis/min. The pin made a slight indentation in the active surface, but no visible break in the metal was found.

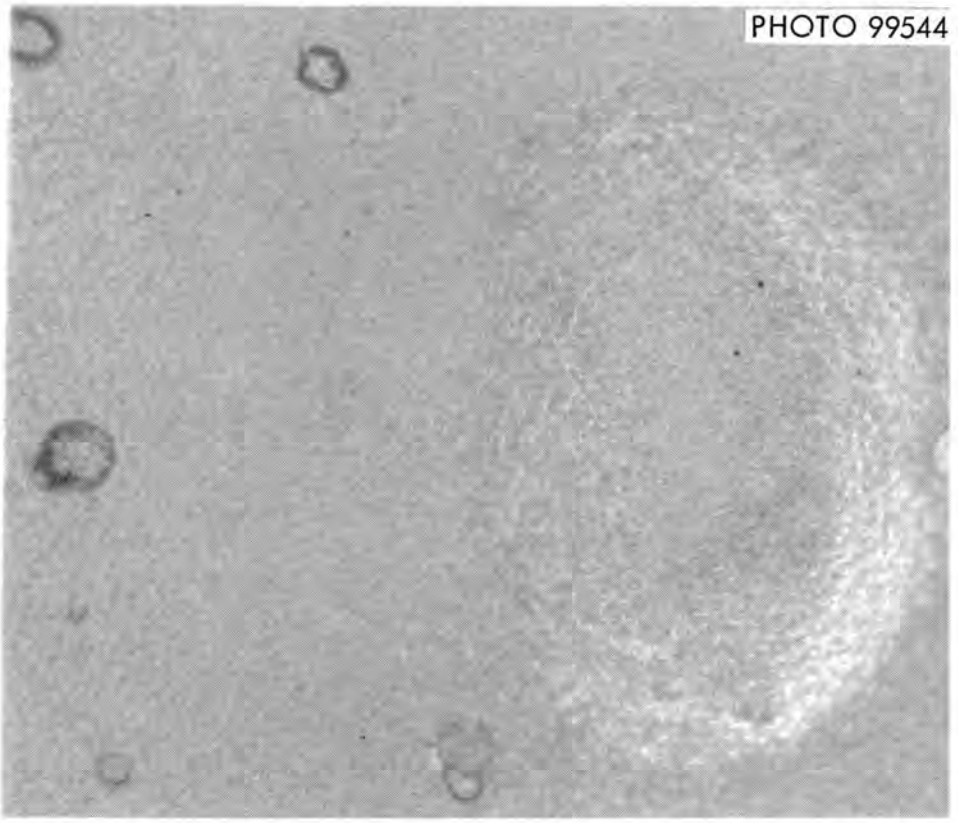

Fig. 5. S-Am-250D After Class I Puncture Test.

e. Class I Shear Strength Test

Source S-Am-250D was placed in the shear blocks and a force of 40 lb was applied for 30 min. The shear test left an indentation on the source, but no break in the metal was observed. The source smeared 60 dis/min.

f. Class I Crushing Force Test

Source S-Am-250D was placed between two smooth steel plates and a force of 200 lb was applied for 15 min. The source smeared 48 dis/min. No visible damage was found. This smear result is less than the count at the end of the previous test, indicating that the repeated smears are decontaminating the source.

g. Class I Impact Test

Source S-Am-250D was placed on a steel pad and a 5-lb weight was dropped from a height of 4 ft, striking the source on the active side. This test did not cause any visible break in the metal covering the active area of the source; however, the source was flattened out somewhat and some of the metal at the outside edges of the source (inactive area) was broken away. The source smeared less than 30 dis/min.

h. Class I External Pressure Test

Source S-Am-250C was placed in a pressure vessel and held for 15 min at 30 psig. The smear was less than 30 dis/min and no visible damage occurred.

2. Boiling Water Leach Test

Source S-Am-250A was subjected to a 27-day boiling water leach test. In this test the source was immersed in 50 ml of distilled water which was maintained at the boiling point. A total reflux condenser was used to prevent evaporative losses, and the water removed for analysis was replaced with equal amounts of fresh distilled water.

Shortly after starting the leach test it was noticed that white solids were forming in the leach water, giving it a "milky" appearance. Also, the stainless steel layer on the back of the source (inactive side) was flaking off. By the end of the test, mush of this layer had flaked off leaving what appeared to be a second stainless steel layer which completely covered the copper backing. Considerable blistering had occurred along the edge of the source, accompanied by rust-colored areas.

At the end of the test, the leach water was filtered and counted. The activity in the samples plus that remaining in the leach water totaled 429 dis/min. The activity on the dried filter paper was 855 dis/min, and the activity on a smear of the source was 249 dis/min, giving a total of 1533 dis/min (0.00069 μCi) lost from the source during the 27-day test.

3. Temperature-Humidity Test

This test was performed by placing the source in an environmental chamber programmed for 8 hr at 131°F and 90% relative humidity and 8 hr at 36°F and 50% relative humidity. A period of 4 hr was provided for making the change from the high temperature conditions to the low temperature conditions, and another 4 hr was provided for making the change from the low to the high temperature conditions, thus giving one complete cycle every 24 hr. The source (S-Am-250B) smeared 621 dis/min on the third day of the test. On the tenth day, the source smeared 55,000 dis/min (0.025 μCi) and appeared to have been wetted with water. It was found that condensate from an uninsulated spot had fallen on the source. The pH of this water was checked and found to be neutral. A shield was placed over the source to prevent additional water from falling on it. On the thirteenth day, the source smeared 36,000 dis/min. The test was terminated on the seventeenth day, at which time the source smeared 10,000 dis/min. At this time, two rust-colored, blistered areas were visible along the inactive edges of the source.

The temperature-humidity test was repeated using source S-Am-250E which had previously been used in the Class A temperature tests. Smears of the source taken at 3, 6, 9, and 13 days were 81, 9, 156,

and 66 dis/min, respectively. The test was ended on the thirteenth day. During the test, several rust-colored areas appeared on the surface of the source. As the test progressed these areas grew larger.

4. Elevated-Temperature Test

Source S-Am-250C which had previously been used for the external pressure test was used for this test. The source was heated according to the time-temperature curve of the Underwriter's Laboratory 1-hr fire test. The furnace was preheated to 500°F in order to meet the requirement of 1000°F at 5 min. A dry air flow of 240 ml/min (0.8 cm/sec velocity at the source) was passed over the source to sweep out any activity which might become airborne. The air stream was then passed through a 1.2-μm Millipore filter in order to collect any activity for counting. Two identical filtering systems were used alternately so that the filters could be changed without interrupting the flow during filter changes. The temperatures were monitored by a calibrated thermocouple located immediately above the active surface of the source.

The filter was changed every 15 min during the first hour of the test. During this time the source temperature increased from 78 to 1700°F. During the remainder of the test, the temperature was maintained at 1700°F. The filters were changed every half-hour for the next 3 hr and then every hour for the next 3 hr, making a total test time of 7 hr. No activity was found on any of the 13 filters. At the end of the test, the internal surfaces of the quartz furnace tube were smeared. None of these smears exceeded 15 dis/min. A moistened cotton swab smear of the active surface of the source gave approximately 100 dis/min. The edges of the source were damaged slightly during removal because the source stuck to the quartz furnace tube. The source surfaces were heavily oxidized during the test and it appeared that one or more large blisters had formed on the active surface of the source leaving small ridges that enclosed part of the blistered area. In attempting to re-smear the active surface, one of these ridges broke open. The resulting smear was 20,706 dis/min (0.009 μCi).

5. Water Leach Test

After completion of all of the testing, each of the sources was subjected to a standard room temperature, 24-hr water leach test as specified in 10 CFR 32, Paragraph 32.102. The activity found in the leach waters is shown below:

Source No.	24-hr Water Leach Test Activity (dis/min)*	Tests Performed Prior to 24-hr Water Leach Test
S-Am-250A	10	Boilding water leach test
S-Am-250B	2,100	Temperature-humidity test
S-Am-250C	13,100	External pressure and elevated temperature tests
S-Am-250D	20	Class I structural tests
S-Am-250E	10	Class A temperature tests and temperature-humidity tests

*The maximum allowable loss in this test is 0.005 μCi (11,100 dis/min).

During the water leach test, rust-colored areas, which appeared to be oxidation products, formed on various surface areas of the sources. In many cases, these areas had the appearance of blisters, particularly along the edges of the sources.

TECHNOLOGY UTILIZATION - 08-01-05

A. Information Center

The rate of accessioning in the Isotopes Information Center has slowed down with only 200 documents entered into the system last month, for a total of 19,200. Documents are now being accessioned generally within 30 days of receipt in the Center, and there is essentially no backlog in any phase of document processing.

During June, 106 IIC documents were sent out in answer to requests, and 37 requests requiring individual answers were filled. Nine letters were translated, and assistance was given to NASA on a machine translation of Russian work related to IIC work. The IIC has granted the Japan Atomic Industrial Forum permission to translate the Isotope User's Guide (ORNL-IIC-19) into Japanese. In his request for permission, Dr. Suetsuna stated that they have found the Guide valuable in their research work, especially as a textbook in training their students and also in public relations activities with affiliate members. A list of reviews in process (for answering future queries) is shown on page 25.

B. Isotopes and Radiation Technology

Galley proofing for Vol. 8(1) and manuscript writing and editing for 8(2) were completed.

C. Publications

Martha Gerrard and P. S. Baker, Selected Abstracts of World Literature on Production and Industrial Uses of Radioisotopes, ORNL-IIC-30 (Part 1) (June 1970).

Title	Author(s)	Status, % Complete
Cement-Polymer Combinations	V. I. Solomatov, translated from Russian and edited by Martha Gerrard, P. S. Baker, and R. E. Greene	At printers
DID Research and Developments - 1969	Isotopes Information Center Staff	At printers
Indium-113m: Preparation and Uses	Martha Gerrard	10
Flow Measurement	R. H. Lafferty, Jr.	20
Iodine-125	P. S. Baker and Martha Gerrard	25
Isotopic Methods of Examination and Authentication in Art and Archaeology	F. J. Miller, E. V. Sayre, and B. Keisch	At reproduction
Oceanography[a]	Isotopes Information Center Staff	90
Patent Review - Process Radiation Development	R. E. Greene, P. S. Baker and Helen Warren	95
Potato Sprout Inhibition by Radiation	F. E. McKinney	40
Radiation vs Glass[b]	D. N. Hess	20
Radioisotopes in the Pharmaceutical Industry	P. S. Baker and Martha Gerrard	5
Radioisotopes in the Steel Industry[c]	Republic Steel Corporation	10
Radioisotopes in X-Ray Fluorescence Analysis	R. H. Lafferty, Jr.	5
Selected Abstracts of World Literature on Production and Industrial Uses of Radioisotopes	Martha Gerrard and P. S. Baker	25
Self-Diffusion in Liquids	F. J. Miller	75
Strontium-90	Roberta Shor, R. H. Lafferty, Jr., and P. S. Baker	100[d]
Technetium-99m: Preparation and Uses	Martha Gerrard and P. S. Baker	30
Radioisotopes in the Textile Industry	F. J. Miller	90
Use of Radioisotopes in Sedimentology	V. Romanovsky, translated and edited by Martha Gerrard	10
Grain Disinfestation - A Worldwide Review	F. E. McKinney	15
Wood Plastics	R. E. Greene	75
Yttrium-90	Martha Gerrard	10
Permuted Isotopes and Radiation Technology Indexes	Helen Raaen	25
Presowing Irradiation of Seeds	Machine translation of Russian book, edited by Martha Gerrard and P. S. Baker	1st draft complete

[a] Draft completed; being held at DID.
[b] Indefinite.
[c] Will be in sections; first section now in hand.
[d] Draft completed; DID reviewing.

RADIOISOTOPE APPLICATIONS DEVELOPMENT

BASIC TECHNOLOGY DEVELOPMENT - 08-03-01

A. Liquid Scintillation Development

1. Alpha Radiation Damage in Phosphors

Nothing to report.

2. Cerenkov Counting

Nothing to report.

3. Information Storage on Phosphor Screens

Nothing to report.

SYSTEMS ENGINEERING APPLICATIONS - 08-03-02

A. Oceanographic Systems Study

Radionuclides appear to be useful tools to study sand transport phenomena and, although many experiments have been conducted to demonstrate their effectiveness as tracers, little is known concerning whether or not the dynamic systems in which they are used can be tagged well enough to achieve quantitative data leading to an understanding of basic mechanisms. The Radioisotope Sand Tracing Study (RIST) has progressed through equipment development to the point where important system tagging parameters can be studied.

The last of FY 1970 RIST field tests was started at Point Mugu, California, on June 22, 1970.

A new electromechanical cable has been installed on the second detector ball, and both detector assemblies are now equipped with a signal mixer. The plug injector will be used for a series of injections into the ocean bottom, which will further define problems associated with this type of insertion system and the monitoring of high count rates at the injection site with a stationary monitor. These experiments are basic to our plans for the study of transport rate measurements. Surface point injections will also be made using our shielded insertion device that has been in service for the past several field tests.

A report covering the data processing and experimental procedures used on the last Point Mugu field test is in preparation. The data and data treatment shown in this report are the most complete to date and will serve as a format for future field test reports.

Detailed plans for the future RIST experiments were prepared and submitted through a revised proposal to DID from the U. S. Army Corps of Engineers.

B. National Security

Nothing to report.

RADIATION PROCESSING APPLICATIONS

ORGANIC SYNTHESIS WITH ISOTOPIC SOURCES - 08-04-01

A. Straight Chain Fatty Acids

Nothing to report.

RADIOISOTOPE SALES

Isotopes, Inc. reduced their purchase order for strontium-90 from 532,000 Ci to 150,00 Ci. Requests for quotations were received from Aerojet-General Corporation and Isotopes, Inc. for strontium-90 sources.

Notable shipments made during June include approximately 35,000 Ci of strontium-90 to Brookhaven National Laboratory, 15,000 Ci of tritium to Radiochemical Centre (England), 5,100 Ci of promethium-147 to Reactor Centrum (Netherlands), 5,001 Ci of promethium-147 to Mitsubishi Corporation (Japan), and 60,000 Ci of promethium-147 to McDonnell Douglas Astronautics Company (shipment made from Pacific Northwest Laboratory, Richland, Washington). Other shipments made were 16,600 Ci of tritium, 936 Ci of krypton-85, 132 Ci of enriched (26.14%) krypton-85, 40 Ci of enriched (22%) krypton-85, 60 mCi of methyl iodide, 32-38 mCi of cobalt-56, and 183 Ci of xenon-133.

Two outstanding large orders are 40,000 Ci of promethium-147 for McDonnell Douglas Astronautics Company and 6,200 Ci of cobalt-60 for Puerto Rico Nuclear Center.

The radioisotope sales proceeds and shipments for the first eleven months of FY 1969 and FY 1970 are given in Table 4.

Table 4. Radioisotope Sales and Shipments

Item	7-1-68 thru 5-31-69	7-1-69 thru 5-31-70
Inventory items	$ 793,331	$ 524,589
Major products	86,943	102,764
Radioisotope services	212,787	292,542
Cyclotron irradiations	161,646	128,152
Miscellaneous processed materials	66,607	72,201
Packing and shipping	77,374	67,565
Total Radioisotope Sales	$1,398,688	$1,187,813
Total Radioisotope Shipments	2,545	2,317

ADMINISTRATIVE SECTION

Visitors to the IDC and travel by IDC personnel are given in Tables 5 and 6, respectively.

Table 5. Visitors to IDC

Visitor's Affiliation	Subject Discussed
AEC, Richland	Source fabrication facilities
Vitro Corporation, Hanford	Source fabrication facilities
ARHCO, Hanford	Source fabrication facilities
Battelle Northwest, Richland	Safety testing of $^{241}AmO_2$ sources
U. S. Radium Corporation	Tritium foils
Japan Atomic Energy Research Institute, Tokyo	Operations research of Isotopes Division
Atomic Energy of Canada, Ltd.	Radioisotope processing techniques
Sloan-Kettering Institute for Cancer Research	Cyclotron production of radioisotopes

Table 6. Travel of IDC Personnel

Site Visited	Purpose of Visit
Johns Hopkins, Baltimore	Discuss nuclear medicine oriented training at Johns Hopkins
Materials Research Corporation	Inspect sputtering equipment for purchase
Veeco	Inspect sputtering equipment for purchase
Bendix	Inspect sputtering equipment for purchase
Research Triangle Institute	Discuss TPR article
AEC-DID	Discuss IIC holdings
Boston	Attend Low-Energy Symposium
Boston College	Present paper at Third Symposium on Low Energy X- and Gamma-Ray Sources and Applications
Oxnard, California	Conduct studies on RIST program
General Electric, Florida	Discuss high pressure equipment

INTERNAL DISTRIBUTION

1. A. L. Allen
2. M. A. Baker
3. P. S. Baker
4. E. E. Beauchamp
5. G. E. Boyd
6-8. T. A. Butler
9. F. N. Case
10. J. A. Cox
11. F. L. Culler
12. W. C. Davis
13. J. S. Drury
14. J. H. Gillette
15. H. R. Gwinn
16. R. F. Hibbs
17. K. E. Jamison
18. Lynda Kern
19. E. H. Kobisk
20. E. Lamb
21. R. E. Leuze
22. J. L. Liverman
23. L. O. Love
24. W. S. Lyon
25. R. E. McHenry
26. F. M. O'Hara
27. W. W. Parkinson
28. J. J. Pinajian
29. M. E. Ramsey
30. S. A. Reynolds
31-32. R. A. Robinson
33. D. A. Ross
34. A. F. Rupp
35. R. W. Schaich
36. A. H. Snell
37. K. A. Spainhour
38. M. R. Skidmore
39-40. H. F. Stringfield
41. A. M. Weinberg
42. J. C. White
43-44. Central Research Library
45. Document Reference Section
46-50. Laboratory Records Department
51. Laboratory Records - RC

EXTERNAL DISTRIBUTION

52. G. A. Andrews, ORAU, Medical Division, Oak Ridge, Tennessee
53. Hal Atkins, Brookhaven National Laboratory, Upton, New York
54. D. S. Ballantine, AEC, Washington, D. C.
55-58. R. F. Barker, AEC, Washington, D. C.
59. N. F. Barr, AEC, Washington, D. C.
60. O. M. Bizzell, AEC, Washington, D. C.
61. C. R. Buchanan, AEC, Washington, D. C.
62. R. L. Butenhoff, AEC, Washington, D. C.
63. T. D. Chikalla, PNL, Richland, Washington
64. D. F. Cope, AEC Site Representative, ORNL
65. D. C. Davis, AEC, Oak Ridge, Tennessee
66. J. C. Dempsey, AEC, Washington, D. C.
67. W. K. Eister, AEC, Washington, D. C.
68. E. E. Fowler, AEC, Washington, D. C.
69. J. D. Goldstein, AEC, Washington, D. C.
70. A. Gottschalk, Argonne Cancer Research Hospital, Chicago, Illinois
71. F. D. Haines, AEC, Washington, D. C.
72-74. J. E. Hansen, PNL, Richland, Washington
75. J. W. Irvine, MIT (Consultant)
76. J. Lawrence, Lawrence Radiation Laboratory, Berkeley, California
77. J. E. Machurek, AEC, Washington, D. C.
78. J. N. Maddox, AEC, Washington, D. C.
79. J. C. Malaro, AEC, Washington, D. C.
80. W. E. Mott, AEC, Washington, D. C.
81. J. A. Powers, AEC, Washington, D. C.
82. G. J. Rotariu, AEC, Washington, D. C.

83. B. A. Ryan, AEC, Richland, Washington
84. W. D. Sandberg, AEC, Aiken, South Carolina
85. S. J. Seiken, AEC, Washington, D. C.
86. R. W. Shivers, AEC, Washington, D. C.
87. P. E. Smith, ARHCO, Richland, Washington
88. L. G. Stang, Jr., BNL, New York
89. G. Taplin, University of California, Los Angeles, California
90-95. D. H. Turno, SRL, Aiken, South Carolina
96. A. R. Van Dyken, AEC, Washington, D. C.
97. Laboratory and University Division
98-112. Division of Technical Information Extension