CENTRAL RESEARCH LIBRARY
DOCUMENT COLLECTION

OAK RIDGE NATIONAL LABORATORY
operated by
UNION CARBIDE CORPORATION
for the
U. S. ATOMIC ENERGY COMMISSION

LOCKHEED MARTIN ENERGY RESEARCH LIBRARIES
3 4456 0514240 4

ORNL-TM-3133

43

RADIOISOTOPE PROGRAM (8000) PROGRESS REPORT FOR AUGUST 1970

A. F. Rupp

OAK RIDGE NATIONAL LABORATORY
CENTRAL RESEARCH LIBRARY
DOCUMENT COLLECTION
LIBRARY LOAN COPY
DO NOT TRANSFER TO ANOTHER PERSON
If you wish someone else to see this document, send in name with document and the library will arrange a loan.
UCN-7969
(3 3-67)

NOTICE This document contains information of a preliminary nature and was prepared primarily for internal use at the Oak Ridge National Laboratory. It is subject to revision or correction and therefore does not represent a final report.

LEGAL NOTICE

This report was prepared as an account of Government sponsored work. Neither the United States, nor the Commission, nor any person acting on behalf of the Commission:

A. Makes any warranty or representation, expressed or implied, with respect to the accuracy, completeness, or usefulness of the information contained in this report, or that the use of any information, apparatus, method, or process disclosed in this report may not infringe privately owned rights; or

B. Assumes any liabilities with respect to the use of, or for damages resulting from the use of any information, apparatus, method, or process disclosed in this report.

As used in the above, "person acting on behalf of the Commission" includes any employee or contractor of the Commission, or employee of such contractor, to the extent that such employee or contractor of the Commission, or employee of such contractor prepares, disseminates, or provides access to, any information pursuant to his employment or contract with the Commission, or his employment with such contractor.

ORNL-TM-3133

Contract No. W-7405-eng-26

Isotopes Development Center

RADIOISOTOPE PROGRAM (8000) PROGRESS REPORT FOR AUGUST 1970

A. F. Rupp

Work Sponsored by

AEC Division of Isotopes Development

SEPTEMBER 1970

OAK RIDGE NATIONAL LABORATORY
Oak Ridge, Tennessee
operated by
UNION CARBIDE CORPORATION
for the
U.S. ATOMIC ENERGY COMMISSION

LOCKHEED MARTIN ENERGY RESEARCH LIBRARIES

3 4456 0514240 4

CONTENTS

Page

RADIOISOTOPE PRODUCTION AND MATERIALS DEVELOPMENT 1

REACTOR-PRODUCED ISOTOPES - 08-01-01 1

A. Biomedical Radioisotopes 1

1. Phosphorus-33 1
2. Potassium-43 3

B. Exploratory Development of Products and Techniques 4

1. Ruthenium-97 4
2. Barium-135m 4
3. Gadolinium-153 4

C. Isotopic Power 5

1. Thulium-170 5

D. Reactor Products Pilot Production 5

E. Source Fabrication 6

1. Nickel-63 6

F. Miscellaneous 6

1. HFIR Target Testing 6

ACCELERATOR-PRODUCED ISOTOPES - 08-01-02 6

A. Biomedical Radioisotopes 6

1. Rubidium-83 6
2. Indium-111 7
3. Gallium-67 8

B. Exploratory Development of Products and Techniques 8

1. Rubidium-84 8

C. Accelerator Pilot Production 9

FISSION PRODUCTS - 08-01-03 10

A. Krypton-85 Enrichment 10

Page

B. Production and Materials Studies 11

1. Fission Products Development Laboratory Process Solution 11
2. Hot Press Modifications 11
3. Strontium-90 Fuel Form Compatibility 11

C. Cesium-137 Gamma Source Development 11

1. Cesium Source Form Development 11
2. Cesium-137 Source Form Characterization 13
3. Cesium Source Testing 14

D. Cesium-137 Pilot Production 15

1. Processing and Process Status 15
2. Operational Summary 15
3. Current Orders 16

E. Strontium-90 Pilot Production 16

1. Processing and Process Status 16
2. Operational Summary 16
3. Current Orders 17

F. Short-Lived Fission Products Pilot Production 17

G. Strontium-90 Silicate Beta Sources 18

1. Matrix Studies 18
2. Encapsulation 18
3. Characterization 18

APPLICATIONS AND TECHNOLOGY SUPPORT - 08-01-04 18

A. Low-Energy Gamma and Secondary X-Ray Sources 18

B. Radioisotope Characterization, Quality Control, and Standards 18

1. Radioisotope Characterization 18
2. Radioisotope Special Analysis and Quality Control . . . 18

C. Radioisotope Safety 18

1. Special Form Prototype Testing 18
2. Surveillance of Regulations and Cask Evaluations 18
3. Source Leak Test Guide 19
4. Unsealed Source Testing 19
5. Tests of Luminous Light Sources 19

Page

TECHNOLOGY UTILIZATION - 08-01-05 20

A. Information Center 20

B. Isotopes and Radiation Technology 20

C. Publications 20

RADIOISOTOPE APPLICATIONS DEVELOPMENT 22

BASIC TECHNOLOGY DEVELOPMENT - 08-03-01 22

A. Analytical Applications of Cerenkov Radiation 22

B. Stability Tests for Components Used in Miniature Power System 22

C. Development of Phosphor Screens for Information Storage . . 22

SYSTEMS ENGINEERING APPLICATIONS - 08-03-02 22

A. Oceanographic Systems Study 22

RADIOISOTOPE SALES 23

ADMINISTRATIVE SECTION 24

PUBLICATIONS 25

REPORTS 25

PAPERS PRESENTED AT SCIENTIFIC MEETINGS 25

PATENT 25

RADIOISOTOPE PROGRAM (8000) PROGRESS REPORT FOR AUGUST 1970

A. F. Rupp

RADIOISOTOPE PRODUCTION AND MATERIALS DEVELOPMENT

REACTOR-PRODUCED ISOTOPES - 08-01-01

A. Biomedical Radioisotopes

1. Phosphorus-33

The purpose of this project is to develop methods of preparing hundred-millicurie quantities of carrier-free phosphorus-33 containing ≤5% phosphorus-32. Phosphorus-33 (25.2 days; 0.248-MeV β^-_{max}) has both a longer half-life and a lower energy beta than phosphorus-32 (14.3 days; 1.709-MeV β^-_{max}), which makes it advantageous for autoradiography, long-term ecological and agricultural studies, synthesis of tagged complex organophosphorus compounds, and double labeling experiments.

Two methods of producing phosphorus-33 are being evaluated. Both methods are based on the irradiation of highly enriched targets, either sulfur-33 (>92 at. %) or chlorine-36 (approximately 63 at. %), in a fast neutron flux to produce phosphorus-33 by either the $^{33}S(n,p)^{33}P$ or $^{36}Cl(n,\alpha)^{33}P$ reaction, respectively. Highly enriched targets are required in order to reduce the phosphorus-32 content of the product and to meet the product specification of ≤5% phosphorus-32.

An improved analytical method is being developed for the precise determination of small amounts of phosphorus-32 in the presence of much larger amounts of phosphorus-33. Liquid scintillation counting does not have sufficient sensitivity to accurately characterize products which approach the ≤5% phosphorus-32 limit specified. A sensitive and accurate assay method for phosphorus-32 will permit more accurate calculation of the earliest shipping data and thereby minimize decay loss of phosphorus-33.

The use of Cerenkov radiation counting for the determination of phosphorus-32 in the presence of phosphorus-33 has been reported by Robinson[1] and Kisieleski,[2] both of whom endorse it as a direct and accurate method for the determination of phosphorus-32 in the presence of phosphorus-33. Cerenkov radiation is produced when a charged particle (e.g., beta particle) passes through a transparent medium at a velocity greater than the

---

[1]J. R. Robinson, ^{33}P, A Superior Radiotracer for Phosphorus, Intern. J. Appl. Radiation Isotopes 20: 531-540 (1969).

[2]W. E. Kisieleski, Cerenkov Radiation and Liquid Scintillation Counting, ANL-7635, Argonne National Laboratory (1969), pp. 152-53.

speed of light in the same medium. The lower energy limit or threshold for the stimulation of Cerenkov radiation in water by beta particles has been shown by Ross[3] theoretically to be 263 keV. Phosphorus-33 ($E_{\beta^-_{max}}$ = 248 keV), which lies below the Cerenkov energy threshold, should not induce measurable Cerenkov emission; whereas phosphorus-32 ($E_{\beta^-_{max}}$ = 1.709 MeV) lies well above this threshold and will induce Cerenkov radiation. Therefore, any Cerenkov radiation produced in a sample containing phosphorus-32 and phosphorus-33 theoretically should be due only to phosphorus-32, with no contribution from the phosphorus-33 present. However, Kisieleski stated in his work that phosphorus-33 exhibited a Cerenkov counting efficiency of 0.53%, which is contrary to theory and would introduce approximately 20% error in the phosphorus-32 assay of samples containing 90 to 95% phosphorus-33. For this reason, experiments to determine the Cerenkov counting efficiency of phosphorus-33 betas were performed.

Two different approaches were taken to determine the Cerenkov counting efficiency of phosphorus-33. The first approach was to follow the Cerenkov decay of duplicate aliquots of a phosphorus-33 product which had been found by liquid scintillation counting to contain $\leq 4\%$ phosphorus-32 and $\geq 96\%$ phosphorus-33. Decay curves were followed for more than two phosphorus-32 half-lives (>30 days) and were found to exhibit a single component of 14.3-day half-life. The second approach was to determine the Cerenkov counting efficiency for samples containing known amounts of calcium-45 standard. Calcium-45 (163 days) provides a convenient, long-lived substitute standard for phosphorus-33 with a literally identical beta spectrum.[4] No statistical difference could be detected between the calcium-45 standards and water blanks using Cerenkov counting. An upper limit of $\leq 0.01\%$ for the counting efficiency of calcium-45, and consequently phosphorus-33, can be set from this work, with the true efficiency probably zero, as theory would predict.

A liquid scintillation counting method for phosphorus-33 products has been investigated and found reproducible. The liquid scintillation solution is a toluene-based solution containing 33% Triton X-100 recommended by Packard Instrument Company, Inc., for counting aqueous samples. To prevent adsorption of carrier-free phosphorus-33 on the walls of the glass counting vials, 4 g of Cab-O-Sil 5M per 100 ml of final solution was added to the liquid scintillator solution. Serious errors in liquid scintillation counting of carrier-free concentrations of radionuclides have been reported in the literature[5,6] due to surface adsorption on the

---

[3]H. H. Ross, Measurement of β-Emitting Nuclides Using Cerenkov Radiation, Anal. Chem. 41: 1260-65 (1969).

[4]O. H. Hogan et al., Beta Spectra, USNRDL-TR-802 (1964), pp. B-13, B-20.

[5]F. A. Blanchard and I. T. Takahashi, Use of Submicron Silica to Prevent Count Loss by Wall Adsorption in Liquid Scintillation Counting, Anal. Chem. 33: 975-76 (1961).

[6]C. P. Petroff, P. P. Nair, and D. A. Turner, The Use of Siliconized Glass Vials in Preventing Wall Adsorption of Some Inorganic Radioactive Compounds in Liquid Scintillation Counting, Intern. J. Appl. Radiation Isotopes 15: 491-94 (1964).

glass walls of counting vials. Liquid scintillation samples prepared without the Cab-O-Sil showed marked decreases in apparent activity during the first three days after preparation. This behavior is indicative of the change in counting geometry that occurs as the carrier-free phosphorus adsorbs and changes from a 4π geometry (i.e., homogeneous distribution) to an approximate 2π geometry (i.e., adsorption on the glass surfaces). The effect of added Cab-O-Sil, which remains suspended, is to maintain the 4π geometry by adsorbing the carrier-free radionuclide on its vastly larger surface area and keeping the activity uniformly distributed. Carrier-free phosphorus-32 samples counted using this liquid scintillator solution exhibited a 14.3-day half-life, indicating that there was no change in geometry due to surface effects and that the liquid scintillator system experienced no unknown effects that might affect its performance. Determinations of the counting efficiencies for phosphorus-32 in both the Cerenkov and the liquid scintillation systems and of the liquid scintillation counting efficiency of phosphorus-33 will be continued next month.

2. Potassium-43

The objectives of this project are: to prepare potassium-43 by the $^{43}Ca(n,p)^{43}K$ reaction, using isotopically enriched ^{43}CaO targets, in quantities sufficient for medical and biological experiments; to define a method for separating potassium-43 from the target in a purity suitable for medical use; and to establish cooperative programs with medical institutions interested in evaluating its usefulness.

Potassium-42 has been used, primarily in animals, to locate tumors, to tag red blood cells, and to study blood flow, but it has very limited use in humans because of its high beta energy (3.53 MeV), its high-energy (1.52 MeV) gamma ray, and its relatively short half-life (12.4 hr). Potassium-43, with a half-life of 22.4 hr and gamma-ray emissions of 0.373 and 0.617 MeV, is more suitable for metabolic and clinical studies because the lower dose rate would permit multiple doses. It has been suggested as a possible tool for studying blood flow through the heart and for diagnosing myocardial infarctions or immune rejection of transplanted organs. It has also proved capable of diffusing through a kidney with greatly reduced renal function, providing a good image of this organ.

Two targets totaling 180 mg enriched (approximately 63%) ^{43}CaO were irradiated simultaneously for 65 hr and processed as a single unit as reported last month. The product was collected in the fractions eluting between 162-182 ml (52-59 column volumes) and the total product was 20.1 mCi at time of shipment. Shipments were made to Johns Hopkins, University of Mississippi Medical Center, and University Hospitals of Cleveland under our cooperative programs.

In the process run reported here we performed a chromatographic elution of the target calcium using 1 M HCl instead of merely washing it off the

column with 5 M HCl. The eluate was collected in 5-ml fractions and the fractions were scanned for activities. The calcium was followed by observing the trace of calcium-47 activity contained therein. Calcium began to elute at about 50 ml and decreased slowly to about 150 ml at which point 5 M HCl was used to remove the remaining calcium within the next 20 ml. The main objective was to separate the scandium-46 which grows into the calcium-43 target after successive irradiations and this objective was achieved. The scandium-46 is the main source of dose in handling the radioactive target during recovery. Four targets were combined and the calcium-43 was recovered.

B. Exploratory Development of Products and Techniques

1. Ruthenium-97

2. Barium-135m

3. Gadolinium-153

Future requirements for gadolinium-153 can be met by irradiation of gadolinium-152 recovered from the HFIR control plate. Sections from a high burnup plate have been recovered. Approximately 400 g of natural europium are contained in the portions isolated for recovery of the gadolinium-152.

Gadolinium-152 is produced by the following reaction:

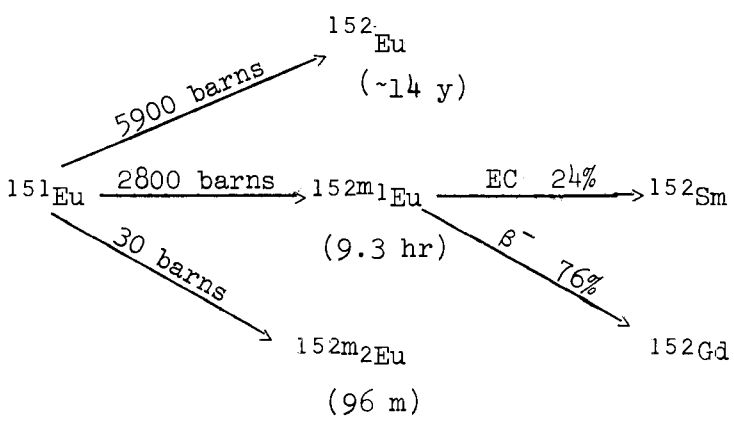

Separation of the gadolinium from other rare-earth fractions is accomplished by the method described in an earlier report.[7]

To reduce the cell time required for the rare-earth separation, we have designed a continuous system for electrolysis of the europium into a mixture of mercury and lithium mercury amalgam. Tracer runs using the new system indicate we can double the europium concentration in the exchange cell without seriously affecting the purity of gadolinium products. The processing rate with the new cell should be approximately 1.5 g of europium and 60 mg of 95% gadolinium-152 per hour.

---

[7]F. N. Case, E. H. Acree, and N. H. Cutshall, Production Study of Gadolinium-153, ORNL-TM-2632, Oak Ridge National Laboratory (August 1969).

The gadolinium-152 will be irradiated to produce gadolinium-153 as required for research and development and source development and to fill ordinary sales requirements.

$$^{152}Gd \xrightarrow[(n,\gamma)]{700\ \text{barns}} {}^{153}Gd \xrightarrow[(n,\gamma)]{27{,}000\ \text{barns}} {}^{154}Gd$$

The second reaction $^{153}Gd \rightarrow {}^{154}Gd$ makes it necessary to limit the irradiation time for a target of gadolinium-152 since the specific activity of gadolinium-153 reaches a maximum of approximately 70 Ci/g at a flux of 2×10^{14} n/cm^2.sec. This occurs in approximately 14 days in the ORR.

C. Isotopic Power

1. Thulium-170

The objectives of this research are to provide sufficient data on thulium-170, which has been proposed as an isotopic power source for short-duration missions, to permit reasonable assessment of its potential application, and to permit preliminary engineering design of power sources. The economics for reactor production of thulium-170 (128.5 day; E_{β^-av} = 0.32 MeV) from natural thulium-169 are favorable and the sesquioxide offers a promising fuel compound, having a practical specific power of approximately 2 W/g and a power density of approximately 16 W/cm^3. The study will include measurements of thermal conductivity and thermal diffusivity, leach rates for safety analysis, high-temperature compatibility with suitable containment metals, vapor pressure, and fuel form densification.

Equipment is being prepared for the determination of the rate of evaporation and vapor pressure at temperatures up to 2300°C for nonradioactive mixtures of Tm_2O_3-Yb_2O_3 by means of a Knudsen cell in a thermogravimetric analysis (TGA) apparatus. Installation of automatic shut-off devices in both the vacuum and cooling water systems of the TGA unit has been completed. In progress are adjustments of the key components in the apparatus and calibration of the balance.

D. Reactor Products Pilot Production (Production and Inventory Accounts)

Processed Units		Service Irradiations	
Radioisotope	Total (mCi)	Type	Number
Osmium-191	13,206	Cerium-141	1
Hafnium-181	6,350	Platinum-196	2
Copper-67	25	Thallium	1
Calcium-47	13	Yttrium oxide	1
Barium-131	18	Gold	1
Palladium-109	1,095	Silicon	1
Potassium-43	20	Stainless steel	1
		Neodymium-aluminum	1
		Vanadium samples	1
		Argon-37	1
Total	20,727		11

E. Source Fabrication

1. Nickel-63

Laboratory techniques are being developed to provide a nickel-63 sample that can be incorporated in stainless steel welding rod. The purpose of the project is to develop a means for assessing defects in welds made on capsules containing chemical munitions using a radioactive tracer. It is anticipated that other isotopes in addition to nickel-63 will be used.

An additional sample of nickel-63 has been prepared for use in stainless steel alloy preparations. The procedure involved electrolytically plating nickel-63 from a saturated ammonium oxalate solution onto a 12-in. length of stainless steel wire at a current of 0.1 A for 1 hr followed by plating an inactive coating of nickel from a bath containing 65% by volume concentrated ammonium hydroxide and 35% molar ammonium sulfate at a current of 0.015 A for 1 hr. Final sample weight measurements indicated that 61.38 mCi of nickel-63 were plated onto the wire, 4.5 mCi were held up in the solids, and 3.9 mCi were held in the liquid portion of the bath. Only 4.0×10^{-4} mCi was lost in the second plating bath when the inactive nickel coating was added.

F. Miscellaneous

1. HFIR Target Testing

Five hydraulic tube rabbits were tested in August; none were rejected.

ACCELERATOR-PRODUCED ISOTOPES - 08-01-02

A. Biomedical Radioisotopes

1. Rubidium-83

The chief objectives of this work are twofold in nature: (1) to elucidate, define, and optimize pertinent production parameters for preparing a high purity product acceptable for human use and (2) to make sufficient material available to cooperative participants on an "excess material" basis for their medical and research applications and evaluation. Rubidium-83 is prepared by cyclotron bombardment of strontium-84 by the following reactions:

$$^{84}Sr(p,2n)^{83}Y \xrightarrow{EC,\ \beta^+} {}^{83}Sr \xrightarrow{EC,\ \beta^+} {}^{83}Rb \ ,$$

$$^{84}Sr(p,pn)^{83}Sr \xrightarrow{EC,\ \beta^+} {}^{83}Rb \ ,$$

$$^{84}Sr(p,2p)^{83}Rb \ .$$

Rubidium-83 has a half-life of 83 days and principal gamma emissions of 0.521 (46%), 0.530 (31%), and 0.553 (16%) MeV.

A request was received from our cooperative participant at the University of Utah for rubidium-83 to be used in muscular dystrophy studies. A 178-mg sample of 75.6% isotopically enriched $^{84}SrCO_3$ was irradiated in the ORNL 86-Inch Cyclotron for 2 hr at an average beam current of 82.7 μA. The irradiated sample was set aside 20 days to allow decay of strontium-83 (32.4 hr) to rubidium-83 before processing.

No preliminary separation of strontium-84 target material from the carrier-free rubidium-83 was performed on this sample in contrast to an earlier[8] separation procedure. The target was dissolved directly in dilute HCl, loaded on a cation-exchange column, and separated as described earlier. The elution behavior, product purity, and production parameters of rubidium-84 were all comparable to earlier results. No bismuth contamination was encountered this time. Strontium-84 recovery has not been completed at this time, but would seem to pose no difficulties.

The experimental phase of this development program is effectively complete and the production technology of rubidium-83 via this reaction path is adequate for compilation of a final report. Such a report will be undertaken within the next few months. As a result this item will be deleted from future monthly reports unless additional experimental work is found necessary.

2. Indium-111

The objectives of this program are twofold: (1) to elucidate, define and optimize pertinent production parameters (cyclotron target material, cyclotron beam energy and current conditions, adverse side reactions leading to undesirable isotopic impurities, target processing and product purification procedures, and target recovery, if necessary) and (2) to make sufficient material available to cooperative participants for their evaluation of indium-111 as a diagnostic radionuclide in medicine. Such applications would include spinal-cerebral cisternography, aerosol lung studies, delayed brain scanning, visualization of the lymphatic system, metabolic studies of indium-labeled macroaggregates and colloids, and possible applications for tumor localizations. Indium-111 has both a favorable decay scheme [gamma emissions of 173 keV (89%) and 247 keV (94%)] ideally suited for external detection and an optimal half-life (2.81 days) for labeling and distribution studies which must be carried out over 24 hr or longer. The use of indium in such lengthy studies is currently impossible with the indium-113m (1.73 hr) isotope now in general use.

Additional data have been obtained confirming the amount of indium-114m (50 day) produced simultaneously with indium-111 by the $^{114}Cd(p,n)^{114m}In$ reaction on isotopic impurities in the target material.[9] Analyses of

---

[8]A. F. Rupp, Radioisotope Program (8000) Progress Report for January 1970, ORNL-TM-2876, Oak Ridge National Laboratory, pp. 5-7.
[9]A. F. Rupp, Radioisotope Program (8000) Progress Report for December 1969, ORNL-TM-2828, Oak Ridge National Laboratory, p. 9.

gamma-ray spectra obtained from ten "aged" counting samples from previous development runs have shown an indium-114m radionuclidic impurity level of 0.0122 ± 0.0010% at end of bombardment to be characteristic of the 96.5% isotopically enriched cadmium-111 target material in current use.

3. Gallium-67

The objectives of this program are to determine the optimal target configuration for gallium-67 (78 hr) production in acceptable purity and quantity and to provide gallium-67 for clinical applications research and development. Interest in this isotope has been spurred by evidence, obtained by the Medical Division of Oak Ridge Associated Universities (ORAU), of a high uptake of carrier-free gallium-67 by lymphoid tumors in both animals and humans.

Gallium-67 decays by electron capture with the emission of four main gamma rays of 93, 184, 296, and 388 keV with intensities of 40, 23, 20, and 8%, respectively. Carrier-free gallium-67 is produced by the $^{68}Zn(p,2n)^{67}Ga$ reaction by bombarding natural, high purity zinc tubing targets (0.375-in. OD by 0.020-in. wall thickness) with 22-MeV protons in the ORNL 86-Inch Cyclotron. Irradiation of natural zinc also produces appreciable amounts of gallium-66 (9.5 hr) that must be allowed to decay before human use.

Three gallium-67 preparations were prepared and shipped to ORAU during this period, and seven smaller orders were filled for clinicians interested in the application of this radionuclide in their studies. No further target or process development is planned on the product at this time. When the beam extraction efficiency of the ORNL 86-Inch Cyclotron is improved so 100 μA or greater extracted beams are available, further work on an enriched zinc-68 target for external irradiations will be undertaken.

B. Exploratory Development of Products and Techniques

1. Rubidium-84

The objectives of this program are to improve the technology for the production of higher purity rubidium-84. Rubidium-84 is regularly produced by the ORNL Isotopes Division by proton bombardment of natural krypton targets, but this product is unsuitable for positron camera scanning due to appreciable amounts of rubidium-83 produced simultaneously. The activity of the rubidium product obtained from proton bombardment of natural krypton in the ORNL 86-Inch Cyclotron is comprised of 9.7% rubidium-83 (83 days), 68% rubidium-84 (33 days), and 22% rubidium-86 (18.7 days) at end of bombardment. The longer half-life of rubidium-83 reduces the $^{84}Rb/^{83}Rb$ ratio even further with time. Appreciable amounts of rubidium-83 are undesirable for positron scintigraphy, because its principal gamma emissions [521 keV (46%), 530 keV (31%), and 553 keV

(16%)] are similar enough in energy to the 511-keV annihilation radiation of rubidium-84 (intensity = 42%) to prevent energy resolution by the positron camera, thereby leading to increased background and loss of spatial resolution. Interest in using rubidium-84 for myocardial scanning with a positron camera has increased the demand for a higher purity product which is being made from an enriched krypton-85 target.

Two rubidium-84 production runs with an enriched krypton-84 target (4.2 at. % krypton-83, 88.6 at. % krypton-84, and 6.9 at. % krypton-86) were performed during August and the product was supplied to customers. Production rates and cyclotron yields were similar to earlier production experience. No difficulties were encountered during either production run with the hot water leaching of the rubidium product from the target holder. One earlier process[10] required dilute HCl to remove the rubidium-84. The cause of this random behavior is still unknown.

C. Accelerator Pilot Production (Production and Inventory Accounts)

Table 1 gives the August 1970 accelerator irradiations and runs for ORNL and non-ORNL customers.

Table 1. Cyclotron Irradiations and Runs for August 1970

Product	No. of Runs	Time (hr:min) Beam	Misc.	Total	Total Charges
		ORNL Research Programs			
Carbon-11	1	0:30	0:55	1:25	$ 165.96
Cobalt-61	4	6:30	3:25	9:55	982.08
Europium-149	1	7:30	1:05	8:35	828.29
Gallium-67	2	4:15	2:05	6:20	565.20
Total		18:45	7:30	26:15	$ 2,541.53
		Non-ORNL Research Programs			
Cobalt-57	1	44:25	1:15	45:40	$ 7,912.97
Rubidium-84	2	10:30	2:20	12:50	2,458.31
Yttrium-87	2	5:00	2:30	7:30	1,220.20
Total		59:55	6:05	66:00	$11,591.48

[10] A. F. Rupp, Radioisotope Program (8000) Progress Report for June 1970, ORNL-TM-3080, Oak Ridge National Laboratory, p. 5.

FISSION PRODUCTS - 08-01-03

A. Krypton-85 Enrichment

No transfers of krypton gas were made into or out of the units this month. A feed cylinder containing 62 liters of krypton gas with a total activity of 2,790 Ci was received. The present status of the six cascades (see Fig. 1) is shown below. The count rates indicate the relative levels of enrichment.

Unit	Activity in Unit (Ci)	Time Since Last Product Removal (days)	Count Rate in Product Section (counts/min) July 1970	August 1970
A	-	104	-	-
AB	1454	153	12,200	13,250
B	1333	153	9,800	10,600
C	1436	243	6,350	7,000
CD	1757	153	7,250	7,600
D	1263	191	9,100	9,450

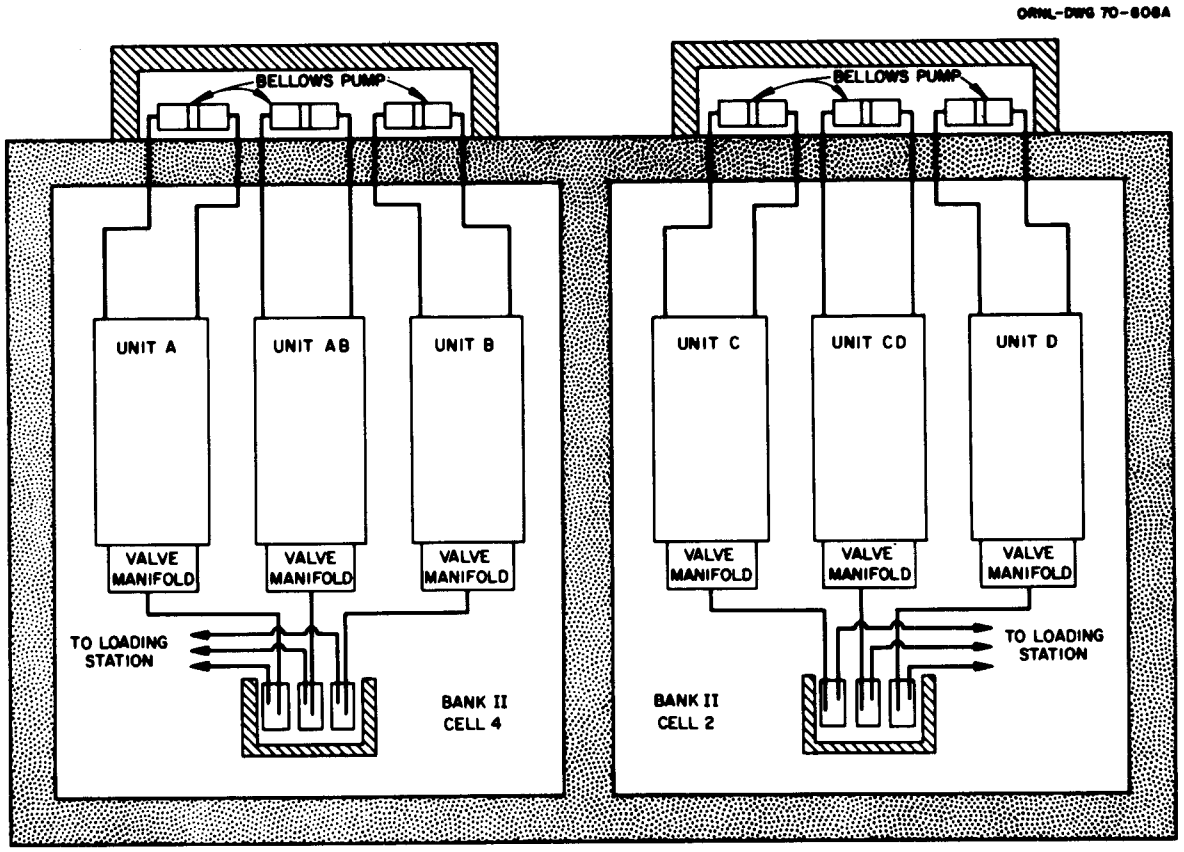

Fig. 1. Schematic Arrangement of Krypton-85 Columns.

B. Production and Materials Studies

1. Fission Products Development Laboratory Process Solution

A corrosion test loop is being assembled to examine the effects of FPDL process solutions on various materials in the radiation field of a cesium-137 source. The loop consists of a circulating pump, specimen container, irradiator, reservoir, and associated tubing and piping for fluid circulation. The first tests will examine the effects of NH_4Cl, $(NH_4)_2CO_3$, and NH_4NO_3 solutions at 80°C on 304L and 347 stainless steels. These are representative fluids and materials which may be utilized in $^{137}CsCl$ process modifications at FPDL. Two loops will be run simultaneously.

2. Hot Press Modifications

A design is being prepared to modify the existing hot press by the addition of a hydraulic ram to tilt the hinged top portion of the press through an angle of 90° and back to a vertical position.

3. Strontium-90 Fuel Form Compatibility

The run for one $^{90}SrTiO_3$ (K_2CO_3 process)-Hastelloy C compatibility couple at 900°C was terminated at the end of 3696 hr of exposure and the couple removed from the furnace for metallographic examination. The result revealed no significant attack of $^{90}SrTiO_3$ on the Hastelloy C test specimen; therefore, approval for the use of the K_2CO_3 process to prepare $^{90}SrTiO_3$ products in the FPDL has been given. The other two $^{90}SrTiO_3$ couples at 1100°C have accumulated 4420 hr of exposure time as of August 27, 1970.

The evaluation of the nonradioactive $SrTiO_3$-Hastelloy C couple exposed at 1100°C for 1000 hr is in progress. Visual inspection of the test specimen shows no appreciable attack. The weight gain of the test specimen and weight losses of the $SrTiO_3$ pellets were slight.

Evaluation of the exposed nonradioactive SrO-Hastelloy C couples is being continued by means of the chemical analysis, but no definite conclusion can be drawn at present. The ^{90}SrO pellets to be used in the compatibility study are not yet available due to priority of other projects at FPDL.

C. Cesium-137 Gamma Source Development

1. Cesium Source Form Development

Cesium-137 chloride has been the compound of choice for radiation sources in applications of moderate temperature conditions. In many respects cesium chloride is the ideal compound; the cesium weight per unit volume is the highest known, the radiation resistance of the CsCl is excellent, the compatibility with stainless steel at ambient temperatures is excellent, and its preparation is straightforward. However, the projected conditions of use of cesium-137 gamma sources are increasingly severe with respect to temperature, and some applications indicate the need for a cesium source material which has low

solubility. In view of these projected conditions of use, the testing of $^{137}CsCl$ at elevated temperatures is being done and the development of a low solubility, temperature resistant source form of cesium is being studied.

A literature survey has been made to investigate potential compounds that may satisfy the requirements of temperature resistance and low solubility. Preliminary studies on such compounds have been carried out by ORNL[11] as well as by other organizations.[12] These studies tentatively concluded that the promising compounds appear to be of the types $Cs_2O \cdot Al_2O_3 \cdot SiO_2$, $CsNbO_3$, $CsTaO_3$, and Cs_2SeO_4. The present literature survey included several other types of compounds in addition to those already covered. Of these, phosphate compounds of the type Li_2NaPO_4 seem attractive. The equivalent cesium compound may be either CsK_2PO_4 or Cs_2KPO_4. Existence of such compounds has not yet been confirmed, and the method of preparation has not been determined.

Two methods of preparation are under consideration for $CsNbO_3$ and $CsTaO_3$.

METHOD 1: This method involves a reaction of molten CsOH (mp = 272°C) with Nb_2O_5 or Ta_2O_5.

$$2CsOH(melt) + Nb_2O_5(s) \rightarrow 2CsNbO_3(s) + H_2O(g)\uparrow$$

The same reaction scheme is applicable to Ta_2O_5. The reaction appears feasible and simple.

METHOD 2 (ref. 11): A simultaneous solvent extraction-chemical reaction is the basis for this method. Either $NbCl_5$ or $TaCl_5$ dissolved in CCl_4 is extracted by an aqueous solution of CsOH. Niobic or tantalic acid produced through hydrolysis of the chloride salt may react with CsOH to form $CsNbO_3$ or $CsTaO_3$.

$$2CsOH(aq) + H_2Nb_2O_6(aq) \rightarrow 2CsNbO_3(s)\downarrow + 2H_2O(l)$$

Method 1 would probably have to be conducted in a dry atmosphere with a continuous purge system because of the hygroscopic nature of CsOH solid. Possible difficulties associated with Method 2 are the low solubilities of both $NbCl_5$ and $TaCl_5$ in CCl_4 (~1% for $TaCl_5$) and the probable complex behavior of niobium and tantalum compounds in an aqueous system.

Preparation for exploratory experimental work is underway to investigate feasibility of producing $CsNbO_3$ and $CsTaO_3$ by Methods 1 and 2 discussed above. Also in progress is the study on possible applications of such cesium compounds.

The feasibility of preparing Cs_2SeO_4 was demonstrated by reacting cesium carbonate and selenium dioxide at elevated temperatures. The cesium carbonate was prepared by reacting oxalic acid with cesium nitrate and calcining, and the selenium dioxide was prepared by heating powdered

---

[11] R. E. McHenry, private communication (December 1969).
[12] Martin Marietta Corporation, The Development of Cesium Compounds for Use as Radioisotope Heat Sources, MND-P-3099 (Oct. 29, 1963).

metallic selenium in air. It will be necessary to measure some of the more important physical properties of this compound, since very little information is available in the literature. The important properties we are concerned with are: melting point, density, solubility, and hygroscopicity.

2. Cesium-137 Source Form Characterization

The purpose of this task is to characterize cesium-137 source forms for operational and safety requirements. The objective of the current study is to find a means of eliminating the solid-solid phase transition which occurs at 469°C with an accompanying volume increase.

The preliminary result of the high temperature X-ray diffraction study has revealed that the structural transformation of CsCl (at ~460°C) seems to be slowed down considerably in the presence of KCl in an amount as small as 2 mole % (or ~0.9 wt %). This observation is based on the X-ray diffraction patterns of a 2 mole % KCl-CsCl mixture taken at 390°C and at room temperature, respectively, after the initial melting. The former pattern showed a mixed structure (~50% each of the CsCl and rock salt structures) even though the temperature of the sample had been reduced to and maintained at 390°C for approximately 24 hr. Likewise, the diffraction pattern at room temperature still retained a considerably higher proportion of the rock salt structure (high temperature CsCl) than could be accounted for by the amount of KCl in the mixture.

In view of the slowness of the structural transformation, it was thought possible to "freeze" the high temperature structure of the 2 mole % KCl-CsCl mixture by quenching the sample with liquid nitrogen. The crystal structure of the quenched sample could then be determined by means of the ordinary (room temperature) X-ray diffraction method. This procedure was necessary because of the difficulties with the high temperature X-ray unit at present. A number of samples with the composition 2 mole % KCl-CsCl were prepared and were subjected to four melting-cooling cycles in a muffle furnace. Samples were taken and quenched with liquid nitrogen at various stages of the heat treatment.

The diffraction patterns of the above samples (obtained by the room-temperature X-ray unit) showed only the low temperature structure of CsCl, indicating that whatever structure was present at high temperatures had reverted to that at low temperature. The method of heat treatment in the muffle furnace for these samples duplicated the procedure in the high temperature X-ray unit. Therefore, one reason for the discrepancy in the diffraction pattern between the results from the high temperature and the room temperature X-ray units may be traced back to the following: All the samples for the room temperature unit have been pulverized prior to the X-ray exposure. In the process of grinding, the heat generated as well as the mechanical stress introduced may have accelerated the structural transformation from a high temperature form to a low temperature one.

The inference from the result of X-ray studies thus far seems to indicate that addition of a small amount of KCl (e.g., ~2 mole %) does not eliminate the structural transformation of CsCl, but would tend to retard the transformation considerably in the process of cooling. Such behavior may be related to some experimental evidence from the literature that in the $Cs_{1-y}K_yCl$ type crystals, the major current carriers are the potassium cations. This is in contrast with the pure CsCl crystals in which the chlorine anion is the major current carrier. From the ionic conductivity data, it is estimated that the net effect of potassium cation on CsCl is for the activation energy of transformation to decrease drastically on heating but to increase on cooling. This phenomenon may explain why the solid phase transformation peak on the DTA thermogram for the 2 mole % KCl-CsCl disappears in the heating process, but on cooling a peak appears in the 200-250°C range.

3. Cesium Source Testing

To fulfill the obligation to test cesium sources (BNL strip type) for the U. S. Army Natick Irradiator, test equipment was constructed to thermally cycle sources between -80 and 120°C. The equipment consists of a small motor-driven cable that slowly lowers the source into a -80°C dry ice-trichloroethylene bath for 10 min and then raises the source into an electric tube heater at 300°C for 7 min.

Four CsCl sources (BNL strip type) have been thermal cycle tested with no detectable leaking or swelling found. The four sources, containing non-radioactive CsCl, were fabricated using the same procedures that are used for active sources. This included furnace testing both the inner and outer capsules at 400°C after loading. The thickness of both the inner and outer capsules were measured before and after the furnace tests and the outer capsules were measured again after the thermal cycle tests. Vacuum leak tests were made before and after the cycling tests.

The four sources were tested one at a time during a 3-month period. The dimensional measurements and cycle data are given in Table 2. The sources were cycled from a minimum of 757 times to a maximum of 2457. This is equivalent to 2.1 to 6.7 years of operational cycling based on 1 cycle per day for the Natick Irradiator. The sources were examined and leak tested during the cycling at random times and no leaks nor significant swelling were found.

Table 2. Thermal Cycle Test Data

Source Number	Max. Inner Capsule Thickness (in.)		Max. Outer Capsule Thickness (in.)			Thermal Cycles	Comparable Usage Natick Irradiator (yr)
	Before Furnace Test	After Furnace Test	Before Furnace Test	After Furnace Test	After Thermal Cycling Test		
F-66	0.317	0.330	0.383	0.383	0.387	2457	6.7
F-67	0.318	0.318	0.380	0.379	0.382	757	2.1
F-69	0.315	0.335	0.380	0.391	0.387	1991	5.5
F-70	0.318	0.315	0.380	0.382	0.384	2010	5.0

D. Cesium-137 Pilot Production (Production and Inventory Accounts)

1. Processing and Process Status

Decontamination and checkout of the cell used for unloading casks containing strontium-90 and cesium-137 feed continued. The piping revisions necessary to adapt this cell to the new cesium-137 feed cask shipping technique have been completed. Minor adjustments will be required to prepare this cell for receipt of cesium-137. The first cesium-137 shipment in the revised cask is expected in early October. A test loading/elution cycle will be made at Hanford during September. It is planned for an ORNL representative to observe this operation.

Item	Cesium-137 (Ci)
In-process material	173,000
Cesium-137 chloride products	103,000
Sources in fabrication	0
Completed sources awaiting shipment	47,000

2. Operational Summary

Cesium-137	August 1970		FY 1971	
	Number	Amount (Ci)	Number	Amount (Ci)
HAPO shipments received	0	0	0	0
Product batches prepared	0	0	0	0
Sources fabricated	32	2,100	39	9,100
Special form cans loaded	0	0	7	77,000
Sources shipped to customers	254	122,100	260	129,100
Special form cans shipped to customers	0	0	7	77,000

The following cesium-137 orders were shipped during August 1970.

Customer	Number of Sources	Amount (Ci)
J. L. Shepherd	4	1,390
AECL, Chalk River	1	50
Gamma Industries	1	8
CNEN (Mexico)	3	15
International Chemical & Nuclear	22	620
U. S. Navy	1	8
Radiation Machinery Corporation	222	120,000
Total	254	122,091

3. Current Orders

A list of current orders for cesium-137 source fabrication or powder shipments is shown below:

Customer	Amount (Ci)	Estimated Shipping Date
Brookhaven National Laboratory	~203,000	March 1971
Atomic Energy of Canada	20,000	October 1970
Radiochemical Centre, England	20,000	April 1971
C.E.A., France	200,001	April 1971
Radiation Resources, Inc.	200,001	To be scheduled
Miscellaneous orders	~1,000	October 1970

Commitments for bulk powder awaiting source fabrication or shipment orders include American Nuclear Corporation, 174,300 Ci; Atomic Energy of Canada, 160,000 Ci; and Radiation Resources, Inc., 40,000 Ci.

E. Strontium-90 Pilot Production (Production and Inventory Accounts)

1. Processing and Process Status

Item	Strontium-90 (Ci)
In-process material	1,390,000
Strontium-90 titanate products	919,000
Sources in fabrication	220,000
Completed sources awaiting shipment	103,000
Returned SNAP sources	325,000
Total	2,957,000

2. Operational Summary

An experimental model resistance-heated hot press was installed on a temporary basis in order to check out the operation of this type of device and at the same time to begin preparation of strontium-90 titanate pellets. This press was a prototype and some drawbacks noted during work with inert

materials had already been incorporated in an improved model, which is scheduled for insertion into the strontium-90 pelletization cell. Many difficulties were experienced during the startup of this press. Most of these were related to the control of temperature and inert gas blanket. Since the hot press has no forced cooling, the increase of cell air temperature is of concern. Techniques were devised for replacing heating elements and other parts of the press, and some modifications to the procedures were made. Four 2.82-in.-diam pellets, two at 250 W each and two at 125 W each, were prepared. The power densities of the first three pellets were marginal (0.70, 0.76, and 0.73 W/cm^3), but they can be used in some sources. The fourth pellet was much better, with a power density of 0.87 W/cm^3 (physical density 4.7 g/cm^3).

Maintenance and minor revisions of the strontium-90 pelletization cell were started on a priority basis. It is planned to install the improved model hot press in this cell by September 1, 1970. Both hot presses will then be used to fabricate strontium-90 pellets for current orders.

De-canning, assays, and blending of strontium-90 titanate stored products for use in fuel pellet fabrications continued. To date, approximately one-half of the required amount of powder for current orders has been prepared.

Sixteen 6-mCi strontium-yttrium sources and sixteen 30-mCi strontium-yttrium sources were prepared.

3. Current Orders

A list of current orders for strontium-90 source fabrication or powder is shown below:

Customer	Amount (Ci)	Estimated Shipping Date
Isotopes, Inc.	153,000	October 1971
U. S. Navy	557,000	September 1971
U. S. Navy	104,000	To be scheduled
Sanders Associates, Inc.	30,000	October 1971
Mitsubishi International Corp.	10,000	October 1971
Miscellaneous orders	~1,000	October 1971

A strontium-90 source containing 105,000 Ci is on hand awaiting shipping instructions from Isotopes, Inc.

F. Short-Lived Fission Products Pilot Production (Production and Inventory Accounts)

Isotope	Number of Batches	Amount (Ci)
Xenon-133	3	~1,400
Iodine-131	1	55
Neodymium-147	1	4
Niobium-95	1	3
Total		1,462

G. Strontium-90 Silicate Beta Sources

1. Matrix Studies

2. Encapsulation

3. Characterization

APPLICATIONS AND TECHNOLOGY SUPPORT - 08-01-04

A. Low-Energy Gamma and Secondary X-Ray Sources

B. Radioisotope Characterization, Quality Control, and Standards

1. Radioisotope Characterization

Recent careful determinations of the half-life of molybdenum-99 have resulted in values ranging from 66.0 to 66.7 hr. The half-life is quite important since products are often used, for example in nuclear medicine, for a week or more. Therefore, the value is being redetermined using portions of a doubly purified product. Measurements of half-lives of other longer lived nuclides are continuing. The literature is continually surveyed for reports of properties of radionuclides of local interest, in order to have the best information for analysis and application, and to answer inquiries.

2. Radioisotope Special Analysis and Quality Control

To determine chlorine in elemental carbon-14, thermal-neutron activation analysis was recommended, because the technique is adequately sensitive, simple, and nondestructive. Alpha counting was recommended for determination of small quantities of curium-244 in water, and attention was called to the need for preserving the samples against hydrolytic deposition, preferably by adding acid. A section of a new book by I. M. Korenman[13] was cited for a general description of the phenomenon.

C. Radioisotope Safety

1. Special Form Prototype Testing

No special form prototypes were received for testing.

2. Surveillance of Regulations and Cask Evaluations

a. Review of Regulations

The "second draft" of the proposed revisions to the IAEA Regulations for the Safe Transport of Radioactive Materials is being reviewed, and comments are being prepared at the request of the Oak Ridge Operations Office.

[13] I. M. Korenman, Analytical Chemistry of Low Concentrations, (Israel Program for Scientific Translations, Jerusalen, 1968).

This proposed regulatory effort will have a tremendous impact on the packaging and transport fields, primarily due to the requirements for demonstration of activity release rates, which result in a range of volumetric leak rates varying from 1/2 cm^3/sec to 10^{-16} cm^3/sec. In addition, the many proposed changes in activity limits in packages will require a new indoctrination of affected personnel. A meeting of a subcommittee of Committee N-14 of the American National Standards Institute was attended at Wilmington, Delaware. This meeting was called to consider the problems associated with the leak test requirements proposed in the revision of the IAEA Regulations.

b. Cask Testing

The filling of the Lithium-Shielded Curium Cask with lithium hydroxide monohydrate was completed and the cask was loaded with a 115-g $^{244}Cm_2O_3$ heat source. An outdoor test of the heat dissipation and neutron shielding capabilities of the cask is in progress to demonstrate compliance with regulatory requirements for shipping containers. Since the shielding material was hand-loaded and hand-tamped, a density gradient exists. This gradient is being mapped by noting differences in surface temperature and surface radiation measurements, so that a uniform compaction of the shielding material may be carried out.

At the present time the surface temperature of the cask is 15°F above the ambient air temperature at an hour past sunrise. At 2:00 PM the surface temperature on the south side of the cask rises to 30°F above ambient air temperature, while the north side remains at the differential of 15°F. This confirms the original design goal of 15°F differential in the shade in quiet air.

Dose rates of fast neutrons vary from 150 mR/hr to 400 mR/hr at the side surfaces of the cask, because of the known density gradient of the shielding. Gamma dose rates vary from 40 mR/hr to 70 mR/hr at the same points. The shielding capability of the 13-in. shield appears to be equivalent to water. At the present time the combined radiation dose rates are above those permitted in general transport, but they are well within the limits permitted for "sole-use" shipments.

Additional water will be added to raise the free moisture content of the shielding to about 10%, and compaction will be performed to reduce the density gradient and improve the shielding capability.

3. Source Leak Test Guide

4. Unsealed Source Testing

5. Tests of Luminous Light Sources

In order to assist manufacturers in establishing compliance with regulations involving dose rates, a number of measurements are being made on both krypton-85 and promethium-147 light sources. The radiation output of these sources will be measured at various distances from the sources using

a lithium-drifted germanium detector and compared with the response of various types of common survey instruments. Radiation readings will also be made using promethium-147, krypton-85, and cobalt-60 standards in order to compare instrument response with the dose rates of the known standards at various distances. The krypton-85 light sources have been received from the vendor and the initial series of measurements is in progress. The promethium-147 sources were ordered in July and are expected early in September.

In a related task, the U. S. Army asked us to evaluate the response of certain of their survey instruments to the radiation given off by small promethium-147 light sources being considered for use in gun sights. The data are being correlated and will be reported next month.

TECHNOLOGY UTILIZATION - 08-01-05

A. Information Center

The number of accessions in the Isotopes Information Center has reached 19,700 with more than 9000 now available for computer searching. In August a total of 275 answers to queries were sent; 200 were IIC-prepared documents, 5 were computer searches, and 70 were general information.

In reply to a query sent in June to recipients of the bibliography of worldwide uses of isotopes, 80 persons have already requested to remain on the distribution list. A number of these requested multiple copies to speed up circulation in their companies.

Five sales letters and a paper were translated. The machine translation work for NASA is almost completed. A list of reviews in progress (for answering future queries) is shown on page 21.

B. Isotopes and Radiation Technology

Permuted indexes for Vols. 1-5 of Isotopes and Radiation Technology are now available.

Writing and editing of Isotopes and Radiation Technology 8(3) were about 75% completed, and galley proofing for 8(2) is being completed.

C. Publications

William Freundlich and Monique Pagès, Ternary Oxides of Np(IV) and Am(III) with Mo or W: NpM_2O_8, $Am_2M_3O_{12}$ (M = Mo, W), Compt. Rend. Acad. Sci. Paris, Ser. C, 269: 392-4 (Aug. 4, 1969), ORNL-tr-2363, Martha Gerrard (translator).

V. I. Solomatov, Polymer-Cement Concretes and Polymer-Concretes, AEC-tr-7147, Computer Translation of Russian book, Martha Gerrard, Ralph E. Greene, and P. S. Baker (eds.), August 1970.

P. S. Baker, A. F. Rupp, and Associates, Isotopes and Radiation Technology 8(1) (Fall 1970).

Title	Author(s)	Status, % Complete
Cement-Polymer Combinations	V. I. Solomatov, translated from Russian and edited by Martha Gerrard, P. S. Baker, and R. E. Greene	In reproduction
Indium-113m: Preparation and Uses	Martha Gerrard	10
Flow Measurement	R. H. Lafferty, Jr.	40
Iodine-125	P. S. Baker and Martha Gerrard	25
Isotopic Methods of Examination and Authentication in Art and Archaeology	F. J. Miller, E. V. Sayre, and B. Keisch	In reproduction
List of AEC Radioisotope Customers with Summary of Radioisotope Shipments, FY 1970	Ruth Curl, compiler	25
Oceanography	Isotopes Information Center Staff	a
Patent Review - Process Radiation Development	R. E. Greene, P. S. Baker and Helen Warren	98
Potato Sprout Inhibition by Radiation	F. E. McKinney	40
Radiation vs Glass[b]	D. N. Hess	20
Radioisotopes in the Pharmaceutical Industry	P. S. Baker and Martha Gerrard	5
Radioisotopes in the Steel Industry	Republic Steel Corporation	20
Radioisotopes in X-Ray Fluorescence Analysis	R. H. Lafferty, Jr.	5
Selected Abstracts of World Literature on Production and Industrial Uses of Radioisotopes (ORNL-IIC-30, Part 2)	Martha Gerrard and P. S. Baker	In reproduction
Self-Diffusion in Liquids	F. J. Miller	75
Strontium-90	Roberta Shor, R. H. Lafferty, Jr., and P. S. Baker	c
Technetium-99m: Preparation and Uses	Martha Gerrard and P. S. Baker	30
Radioisotopes in the Textile Industry	F. J. Miller	90
Use of Radioisotopes in Sedimentology	V. Romanovsky, translated and edited by Martha Gerrard	10
Grain Disinfestation - A Worldwide Review	F. E. McKinney	20
Wood Plastics	R. E. Greene	95
Yttrium-90	Martha Gerrard	10
Permuted Isotopes and Radiation Technology Indexes	Helen Raaen	80
Presowing Irradiation of Seeds	Machine translation of Russian book, edited by Martha Gerrard and P. S. Baker	1st draft complete

[a]Draft completed; being held at DID.

[b]Indefinite.

[c]Being held at DID.

RADIOISOTOPE APPLICATIONS DEVELOPMENT

BASIC TECHNOLOGY DEVELOPMENT - 08-03-01

A. Analytical Application of Cerenkov Radiation

Our program on Cerenkov radiation is being continued with the design of a practical monitoring device for lakes, streams, and other aquatic environments. The design is being directed toward the detection of radionuclides that could be released by power reactor sites (fission products). Parameters that will be investigated include sensitivity, stability, and optimization of signal/noise characteristics.

B. Stability Tests for Components Used in Isotope Miniature Power System

The Isotope Miniature Power System (IMPS) is a small device designed to provide electrical energy derived from the conversion of radioisotope decay heat by a thermoelectric module. A problem of stability (electrical) has been observed with several of the prototype IMPS and we have been asked to look into the problem. Tests have been started on samples of the insulation and thermoelectric modules that have been supplied. These tests are designed to detect breakdown of the components at preparation or operating temperatures.

C. Development of Phosphor Screens for Information Storage

The initial evaluation phase of this program has been completed. Phosphor films prepared from a phosphorescent form of ZnS:Cu (U. S. Radium) appear suitable for the proposed application. The film is prepared by coating a TiO_2 loaded plastic sheet with the phosphor and then covering the phosphor with a clear plastic coating. Information has been stored on the film for over 4 hr when activated by light at 540 nm. The TiO_2 acts as an efficient reflector but also reduces the resolution of the film somewhat. Samples of the film have been supplied for additional testing under the conditions of the actual application.

SYSTEMS ENGINEERING APPLICATIONS - 08-03-02

A. Oceanographic Systems Study

Radionuclides appear to be useful tools to study sand transport phenomena and, although many experiments have been conducted to demonstrate their effectiveness as tracers, little is known concerning whether or not the dynamic systems in which they are used can be tagged well enough to achieve quantitative data leading to an understanding of basic mechanisms. The Radioisotope Sand Tracing (RIST) study has progressed through equipment development to the point where important system tagging parameters can be studied.

The survey equipment used during the Point Mugu experiment (June-July 1970) has been returned for maintenance and preparation for the next field experiment. Some trouble was experienced with the water seals on one of the detector balls and moisture was observed in the sealed chamber used to house the cesium iodide crystals and preamplifier electronics.

Data obtained by sampling cores of tagged sand that were placed on the ocean floor in approximately 20 ft of water are being processed. The use of the data to calculate a volume rate of transport indicates that the volume rate increases with time. This is in error due to insufficient data to obtain a relationship of tagged sand distribution in the plug with the concentration at the surface of the plug (water/sand interface).

Because the surface concentration was derived by extrapolation rather than direct measurement and the cross section of the tagged plug may be increasing with time, we are planning experiments that will overcome this problem.

The general purpose computer, PDP-8/I, has been received and is being checked to verify that specifications were met. The accessory components (scope and magnetic tape printout) are also being connected to the basic computer.

RADIOISOTOPE SALES

Requests for quotations for 100,000 Ci of tritium were received from Saunders-Roe Development Labs, England, and Centre d'Etude de L'Energie Nucleaire, Mol-Donk, Belgium. Requests for quotations for approximately 1.2 MCi of strontium-90 as heat sources were received from Sanders Nuclear Corporation and General Electric Company. A request for quotation was received from Isotopes, Inc., for 300,000-500,000 Ci strontium-90 as heat sources.

An order for 100,000 Ci of promethium-147 received from McDonnell Douglas Astronautics Company is to be shipped from Richland, Washington.

Shipments made during August include 219,730 mCi of xenon-133, 167 Ci of krypton-85, 4,321 Ci of tritium, 100 Ci of a 10:1 tritium-helium mixture, approximately 38 Ci of strontium-90 silicate spheres, 2 μCi of plutonium-236, and 60 mCi of nickel-63 on a 1-ft wire.

The radioisotope sales proceeds and shipments for July 1969 and 1970 are given in Table 3.

Table 3. Radioisotope Sales and Shipments

Item	July 1969	July 1970
Inventory items	$ 51,491	$ 41,311
Major products	6,661	9,110
Radioisotope services	36,320	12,096
Cyclotron irradiations	3,647	10,326
Miscellaneous processed material	4,157	2,623
Packing and shipping	6,000	6,480
Total	$108,276	$ 81,946
Total Radioisotope Shipments	197	241

ADMINISTRATIVE SECTION

Travel by IDC personnel and visitors to the IDC are given in Tables 4 and 5, respectively.

Table 4. Travel of IDC Personnel

Site Visited	Purpose of Visit
Marine Products Development Laboratory Gloucester, Massachusetts	Tour the facility
Furman University Greenville, South Carolina	Analyze data concerning gallium-67 experiment
Vanderbilt University Nashville, Tennessee	Discuss cooperative experiments
Mississippi State University Starkville, Mississippi	Present lecture and seminar to NSF Institute
Lawrence Radiation Laboratory Livermore, California	Discuss fabrication problems

Table 5. IDC Visitors

Visitors (affiliation)	Purpose of Visit
Walters State Community College Morristown, Tennessee	Discuss experiments
Foote Mineral Company Knoxville, Tennessee	Tour ORNL 86-Inch Cyclotron
Atlantic-Richfield Hanford Corp.	Discuss cesium-137 and strontium-90 encapsulation procedures and techniques
Appareils Gamma Siar Levallois, France	Obtain information on isotope applications

PUBLICATIONS

REPORTS

E. E. Ketchen, Thermal Conductivities of Tm_2O_3, Yb_2O_3, and a Tm_2O_3-Yb_2O_3 Mixture, ORNL-TM-3066, Oak Ridge National Laboratory (August 1970).

N. C. Bradley and C. L. Ottinger, Investigation of Deformation in Rectangular Cesium-137 Sources, ORNL-TM-3069, Oak Ridge National Laboratory (August 1970).

A. F. Rupp, Radioisotope Program (8000) Progress Report for June 1970, ORNL-TM-3080, Oak Ridge National Laboratory.

J. H. Gillette, Isotopes Program (5000) Progress Report for Quarter Ending June 30, 1970, ORNL-TM-3089, Oak Ridge National Laboratory.

A. F. Rupp, Radioisotope Program (8000) Progress Report for July 1970, ORNL-TM-3111, Oak Ridge National Laboratory.

E. Lamb, IPF Monthly Status Report for July 1970, ORNL CF-70-8-22, Oak Ridge National Laboratory.

PAPERS PRESENTED AT SCIENTIFIC MEETINGS

A. V. Ramayya, J. H. Hamilton, P. E. Little, E. Collins, and J. J. Pinajian, "Tables and Graphs for the Analysis of (1-3) γ-γ Directional Correlations," presented at International Conference on Angular Correlations in Nuclear Disintegration, Eindhoven, The Netherlands, August 17-21, 1970.

PATENT

Elmer C. Hurst and Homer B. Hupf, Method for Separating Molybdenum from Technetium, U. S. Patent No. 3,519,385 (July 7, 1970).

INTERNAL DISTRIBUTION

1. A. L. Allen
2. M. A. Baker
3. P. S. Baker
4. E. E. Beauchamp
5. G. E. Boyd
6-8. T. A. Butler
9. F. N. Case
10. J. A. Cox
11. F. L. Culler
12. W. C. Davis
13. J. S. Drury
14. J. H. Gillette
15. H. R. Gwinn
16. R. F. Hibbs
17. K. E. Jamison
18. Lynda Kern
19. E. H. Kobisk
20. E. Lamb
21. R. E. Leuze
22. J. L. Liverman
23. L. O. Love
24. W. S. Lyon
25. R. E. McHenry
26. F. M. O'Hara
27. W. W. Parkinson
28. J. J. Pinajian
29. M. E. Ramsey
30. S. A. Reynolds
31-32. R. A. Robinson
33. D. A. Ross
34. A. F. Rupp
35. R. W. Schaich
36. A. H. Snell
37. K. A. Spainhour
38. M. R. Skidmore
39-40. H. F. Stringfield
41. A. M. Weinberg
42. J. C. White
43-44. Central Research Library
45. Document Reference Section
46-50. Laboratory Records Department
51. Laboratory Records - RC

EXTERNAL DISTRIBUTION

52. G. A. Andrews, ORAU, Medical Division, Oak Ridge, Tennessee
53. Hal Atkins, Brookhaven National Laboratory, Upton, New York
54. D. S. Ballantine, AEC, Washington, D. C.
55-58. R. F. Barker, AEC, Washington, D. C.
59. N. F. Barr, AEC, Washington, D. C.
60. O. M. Bizzell, AEC, Washington, D. C.
61. C. R. Buchanan, AEC, Washington, D. C.
62. R. L. Butenhoff, AEC, Washington, D. C.
63. T. D. Chikalla, PNL, Richland, Washington
64. D. F. Cope, AEC Site Representative, ORNL
65. D. C. Davis, AEC, Oak Ridge, Tennessee
66. J. C. Dempsey, AEC, Washington, D. C.
67. W. K. Eister, AEC, Washington, D. C.
68. E. E. Fowler, AEC, Washington, D. C.
69. J. D. Goldstein, AEC, Washington, D. C.
70. A. Gottschalk, Argonne Cancer Research Hospital, Chicago, Illinois
71. F. D. Haines, AEC, Washington, D. C.
72-74. J. E. Hansen, PNL, Richland, Washington
75. J. W. Irvine, MIT (Consultant)
76. J. Lawrence, Lawrence Radiation Laboratory, Berkeley, California
77. J. E. Machurek, AEC, Washington, D. C.
78. J. N. Maddox, AEC, Washington, D. C.
79. J. C. Malaro, AEC, Washington, D. C.
80. W. E. Mott, AEC, Washington, D. C.
81. J. A. Powers, AEC, Washington, D. C.
82. G. J. Rotariu, AEC, Washington, D. C.

83. B. A. Ryan, AEC, Richland, Washington
84. W. D. Sandberg, AEC, Aiken, South Carolina
85. S. J. Seiken, AEC, Washington, D. C.
86. R. W. Shivers, AEC, Washington, D. C.
87. P. E. Smith, ARHCO, Richland, Washington
88. L. G. Stang, Jr., BNL, New York
89. G. Taplin, University of California, Los Angeles, California
90-95. D. H. Turno, SRL, Aiken, South Carolina
96. A. R. Van Dyken, AEC, Washington, D. C.
97. Laboratory and University Division
98-112. Division of Technical Information Extension