CENTRAL RESEARCH LIBRARY
DOCUMENT COLLECTION 43

**OAK RIDGE NATIONAL LABORATORY**
operated by
UNION CARBIDE CORPORATION
for the
U. S. ATOMIC ENERGY COMMISSION

ORNL-TM-3183

LOCKHEED MARTIN ENERGY RESEARCH LIBRARIES
3 4456 0514296 7

# RADIOISOTOPE PROGRAM (8000) PROGRESS REPORT FOR SEPTEMBER 1970

A. F. Rupp

OAK RIDGE NATIONAL LABORATORY
CENTRAL RESEARCH LIBRARY
DOCUMENT COLLECTION
**LIBRARY LOAN COPY**
DO NOT TRANSFER TO ANOTHER PERSON
If you wish someone else to see this document, send in name with document and the library will arrange a loan.
UCN-7969
(3 3-67)

**NOTICE** This document contains information of a preliminary nature and was prepared primarily for internal use at the Oak Ridge National Laboratory. It is subject to revision or correction and therefore does not represent a final report.

LEGAL NOTICE

This report was prepared as an account of Government sponsored work. Neither the United States, nor the Commission, nor any person acting on behalf of the Commission:

A. Makes any warranty or representation, expressed or implied, with respect to the accuracy, completeness, or usefulness of the information contained in this report, or that the use of any information, apparatus, method, or process disclosed in this report may not infringe privately owned rights; or

B. Assumes any liabilities with respect to the use of, or for damages resulting from the use of any information, apparatus, method, or process disclosed in this report.

As used in the above, "person acting on behalf of the Commission" includes any employee or contractor of the Commission, or employee of such contractor, to the extent that such employee or contractor of the Commission, or employee of such contractor prepares, disseminates, or provides access to, any information pursuant to his employment or contract with the Commission, or his employment with such contractor.

ORNL-TM-3183

Contract No. W-7405-eng-26

Isotopes Development Center

# RADIOISOTOPE PROGRAM (8000) PROGRESS REPORT FOR SEPTEMBER 1970

A. F. Rupp

Work Sponsored by

AEC Division of Isotopes Development

OCTOBER 1970

LOCKHEED MARTIN ENERGY RESEARCH LIBRARIES

3 4456 0514296 7

OAK RIDGE NATIONAL LABORATORY
Oak Ridge, Tennessee
operated by
UNION CARBIDE CORPORATION
for the
U.S. ATOMIC ENERGY COMMISSION

CONTENTS

Page

RADIOISOTOPE PRODUCTION AND MATERIALS DEVELOPMENT . . . . . 1

REACTOR-PRODUCED ISOTOPES - 08-01-01 . . . . . 1

A. Biomedical Radioisotopes . . . . . 1

1. Phosphorus-33 . . . . . 1
2. Potassium-43 . . . . . 2

B. Exploratory Development of Products and Techniques . . . . 3

1. Lanthanum-137 . . . . . 3

C. Isotopic Power . . . . . 4

1. Thulium-170 . . . . . 4

D. Reactor Products Pilot Production . . . . . 5

E. Source Fabrication . . . . . 5

1. Nickel-63 . . . . . 5

F. Miscellaneous . . . . . 6

1. HFIR Target Testing . . . . . 6

ACCELERATOR-PRODUCED ISOTOPES - 08-01-02 . . . . . 6

A. Biomedical Radioisotopes . . . . . 6

1. Indium-111 . . . . . 6
2. Gallium-67 . . . . . 9

B. Exploratory Development of Products and Techniques . . . . 11

1. Rubidium-84 . . . . . 11
2. Cesium-129 . . . . . 12
3. Carbon-11 . . . . . 14

C. Accelerator Pilot Production . . . . . 15

FISSION PRODUCTS - 08-01-03 . . . . . 16

A. Krypton-85 Enrichment . . . . . 16

B. Separation and Purification of Krypton-85 and Fission Xenon . . . . . 17

Page

C. Production and Materials Studies . . . . . 17

1. New Strontium Die Design . . . . . 17
2. Strontium-90 Fuel Form Compatibility . . . . . 18

D. Cesium-137 Gamma Source Development . . . . . 19

1. Cesium Source Form Development . . . . . 19
2. Cesium-137 Source Form Characterization . . . . . 22

E. Cesium-137 Pilot Production . . . . . 22

1. Processing and Process Status . . . . . 22
2. Operational Summary . . . . . 23
3. Current Orders . . . . . 23

F. Strontium-90 Pilot Production . . . . . 23

1. Processing and Process Status . . . . . 23
2. Operational Summary . . . . . 26
3. Current Orders . . . . . 26
4. Source Fabrication . . . . . 26

G. Short-Lived Fission Products Pilot Production . . . . . 27

H. Strontium-90 Silicate Beta Sources . . . . . 27

1. Matrix Studies . . . . . 27

APPLICATIONS AND TECHNOLOGY SUPPORT - 08-01-04 . . . . . 27

A. Low-Energy Gamma and Secondary X-Ray Sources . . . . . 27

1. Literature Survey on Americium-241 . . . . . 27
2. Samarium-151 . . . . . 27

B. Radioisotope Characterization, Quality Control, and Standards . . . . . 28

1. Radioisotope Characterization . . . . . 28
2. Radioisotope Special Analysis and Quality Control . . 30

C. Radioisotope Safety . . . . . 30

1. Surveillance of Regulations and Cask Evaluations . . . 30
2. Tests of Luminous Light Sources . . . . . 31

Page

TECHNOLOGY UTILIZATION - 08-01-05 . . . . . 34

A. Information Center . . . . . 34

B. Isotopes and Radiation Technology . . . . . 34

C. Publications . . . . . 34

RADIOISOTOPE APPLICATIONS DEVELOPMENT . . . . . 36

BASIC TECHNOLOGY DEVELOPMENT - 08-03-01 . . . . . 36

A. Analytical Application of Cerenkov Radiation . . . . . 36

B. Stability Tests for Components Used in Isotope Miniature Power System . . . . . 36

C. Development of Phosphor Screens for Information Storage . 36

SYSTEMS ENGINEERING APPLICATIONS - 08-03-02 . . . . . 37

A. Oceanographic Systems Study . . . . . 37

RADIOISOTOPE SALES . . . . . 37

ADMINISTRATIVE SECTION . . . . . 38

PUBLICATIONS . . . . . 39

REPORTS . . . . . 39

PAPERS PRESENTED AT SCIENTIFIC MEETINGS . . . . . 39

TRANSLATIONS . . . . . 40

# RADIOISOTOPE PROGRAM (8000) PROGRESS REPORT FOR SEPTEMBER 1970

A. F. Rupp

## RADIOISOTOPE PRODUCTION AND MATERIALS DEVELOPMENT

### REACTOR-PRODUCED ISOTOPES - 08-01-01

### A. Biomedical Radioisotopes

#### 1. Phosphorus-33

The purpose of this project is to develop methods of preparing hundred-millicurie quantities of carrier-free phosphorus-33 containing $\leq 5\%$ phosphorus-32. Phosphorus-33 (25.2 days; 0.248-MeV $\beta^-_{max}$) has both a longer half-life and a lower energy beta than phosphorus-32 (14.3 days; 1.709-MeV $\beta^-_{max}$), which makes it advantageous for autoradiography, long-term ecological and agricultural studies, synthesis of tagged complex organophosphorus compounds, and double labeling experiments.

Two methods of producing phosphorus-33 are being evaluated. Both methods are based on the irradiation of highly enriched targets, either sulfur-33 (>92 at. %) or chlorine-36 (approximately 63 at. %) in a fast neutron flux to produce phosphorus-33 by either the $^{33}S(n,p)^{33}P$ or $^{36}Cl(n,\alpha)^{33}P$ reaction, respectively. Highly enriched targets are required in order to reduce the phosphorus-32 content of the product and to meet the product specification of $\leq 5\%$ phosphorus-32.

A target containing 2.36 g of enriched $K^{36}Cl$ was irradiated in the HFIR from January 28 to August 22, 1970, and was processed for phosphorus-33 in September. The product contained 175 mCi compared to an expected yield of approximately 1 Ci. The remainder of the activity adhered to the broken quartz ampule, and a subsequent acid leach produced a solution containing about five times more low-energy beta activity than the product. The analysis of the product showed the phosphorus-32 activity was less than 2%. A check for gamma activities showed 0.024% antimony-124 and approximately 0.001% cobalt-60 as the only detected impurities. Two more targets were discharged on the same date and will be processed.

Counting efficiencies determined to date for phosphorus-32 and phosphorus-33 in both Cerenkov and liquid scintillation systems[1] are reported in Table 1.

[1]A. F. Rupp, Radioisotope Program (8000) Progress Report for August 1970, ORNL-TM-3133, Oak Ridge National Laboratory, pp. 1-3.

These counting efficiencies are higher than reported by other workers, presumably due to the higher sensitivity to the near ultraviolet spectral region of the quartz-faced, bialkali photomultipliers installed in the liquid scintillation spectrometer used for this work. A draft of a final report on this method of analysis has been prepared. Additional work on the determination and refinement of the phosphorus-32 and phosphorus-33 counting efficiencies must be completed before either the report or the analytical method can be completed.

Table 1. Counting Efficiencies for Phosphorus-32 and Phosphorus-33 Based on Current Data

| Radionuclide | Cerenkov Efficiency (%) | Liquid Scintillation Efficiency (%) |
|---|---|---|
| Phosphorus-32 | 43.8 ± 1.6 | 99.6 ± 3.5 |
| Phosphorus-33 | 0 | 91.2 ± 0.5 |

## 2. Potassium-43

The objectives of this project are: to prepare potassium-43 by the $^{43}Ca(n,p)^{43}K$ reaction, using isotopically enriched $^{43}CaO$ targets, in quantities sufficient for medical and biological experiments; to define a method for separating potassium-43 from the target in a purity suitable for medical use; and to establish cooperative programs with medical institutions interested in evaluating its usefulness.

Potassium-42 has been used, primarily in animals, to locate tumors, to tag red blood cells, and to study blood flow, but it has very limited use in humans because of its high beta energy (3.53 MeV), its high-energy (1.52 MeV) gamma ray, and its relatively short half-life (12.4 hr). Potassium-43, with a half-life of 22.4 hr and gamma-ray emissions of 0.373 and 0.617 MeV, is more suitable for metabolic and clinical studies because the lower dose rate would permit multiple doses. It has been suggested as a possible tool for studying blood flow through the heart and for diagnosing myocardial infarctions or immune rejection of transplanted organs. It has also proved capable of diffusing through a kidney with greatly reduced renal function, providing a good image of this organ.

Two targets totaling 180-mg enriched $^{43}CaO$ were irradiated simultaneously for 65 hr and processed as a single unit. The product, collected in the fractions eluting between 160-175 ml (52-56 column volumes), contained 20 mCi of potassium-43 at time of shipment. Shipments were made to Johns Hopkins and the University of Mississippi Medical Center under our cooperative programs.

The calcium target recovery last month yielded 428 mg of $^{43}CaO$, which was calculated to be 94% of the total for the irradiated targets. The calcination of the $CaC_2O_4$ precipitate was accomplished at 800°C under vacuum. A quartz container was used instead of the platinum crucible used in previous recoveries. This change to quartz eliminated all trace of the gold-199 and iridium-192 activities which were previously prominent in the target dissolver samples. The potassium-43 target processed this month was the first one in which these contaminants have been eliminated. This method of calcination will be adopted for all future target recoveries.

The calcium target from the product processed was again eluted from the column chromatographically to remove scandium-46. The procedure followed that described last month and the calcium eluted from 50-180 ml with 1 M HCl. The remainder was eluted in 20 ml using 2.5 M HCl. A portion of the eluate was submitted for mass spectrographic analysis. The results obtained are compared with the mass analysis for the usual 61% enrichment:

| | At. % in Target | |
|---|---|---|
| | Original | Recovered |
| Calcium-40 | 12.67 | 24.2 |
| Calcium-41 | — | <0.03 |
| Calcium-42 | 9.38 | 8.2 |
| Calcium-43 | 61.63 | 49.0 |
| Calcium-44 | 16.32 | 18.4 |
| Calcium-45 | — | 0.02 |
| Calcium-46 | <0.10 | 0.001 |
| Calcium-48 | <0.10 | 0.06 |

It is difficult to draw any direct conclusions from these results because of the uncertain history of the recovered target material. Not all of the targets were of the identical enrichment and batch reported above, and there were probably others mixed in, although the low result for calcium-43 was not expected. On the basis of the calcium-40 alone, one might be led to conclude the target has become contaminated with natural calcium to the extent of approximately 10-15%.

## B. Exploratory Development of Products and Techniques

### 1. Lanthanum-137

Lanthanum-137 has a half-life of $6 \times 10^4$ years. It possesses an excited state at 0.010 MeV with an 89-nsec lifetime, which makes this nuclide suitable for the resonant absorption applications of the Mössbauer technique. The objective of this study is to determine the production parameters and separation procedures for making carrier-free lanthanum-137 available in significant quantities.

A cooperative program was initiated with Hebrew University of Jerusalem to produce approximately 150 μg of lanthanum-137. A target containing 61 mg of enriched $^{136}CeO_2$ (22%) was irradiated for one 23-day cycle in

a flux of 2 x $10^{15}$ n/cm$^2$.sec. After a period of decay to allow short-lived activities to subside, the target was dissolved in nitric acid and the cerium was oxidized with $NaBrO_3$ and extracted with di(2-ethylhexyl)-phosphoric acid using the procedure described by M. Deschuyter et al.[2] The cerium was recovered by oxalate precipitation and 40.2 mg of $^{136}CeO_2$ was recovered and reencapsulated for further irradiation.

## C. Isotopic Power

### 1. Thulium-170

The objectives of this research are to provide sufficient data on thulium-170, which has been proposed as an isotopic power source for short-duration missions, to permit reasonable assessment of its potential application, and to permit preliminary engineering design of power sources. The economics for reactor production of thulium-170 (128.5 day; $E_{\beta^-}$ = 0.32 MeV) from natural thulium-169 are favorable and the sesquioxide offers a promising fuel compound, having a practical specific power of approximately 2 W/g and a power density of approximately 16 W/cm$^3$. The study will include measurements of thermal conductivity and thermal diffusivity, leach rates for safety analysis, high-temperature compatibility with suitable containment metals, vapor pressure, and fuel form densification.

Selection of eighteen $^{170}Tm_2O_3$ pellets for the compatibility study has been completed. They represent two different types of material, one prepared by the Sanders Nuclear proprietary process and the other by the SRL process. After double encapsulation, these $^{170}Tm_2O_3$ pellets will be loaded in a high-temperature vacuum furnace under the conditions outlined in Table 2. Decontamination of a cell is required prior to introduction of a pressure-vacuum welder for encapsulation of the $^{170}Tm_2O_3$ pellets.

Table 2. Experimental Program for $^{170}Tm_2O_3$-Refractory Metal Compatibility Studies

| Sample Number[a] | Inner Capsule[b] and Test Disk Material | Exposure Conditions | |
|---|---|---|---|
| | | Temp (°C) | Time (hr) |
| S-1 | TZM | 1600 | 2500 |
| S-2 | Ta-10% W | 1600 | 2500 |
| S-6 | T-111 | 1600 | 2500 |
| S-7 | Tungsten | 1600 | 2500 |
| S-3 | Ta-10% W | 1600 | 5000 |
| S-4 | TZM | 1600 | 5000 |
| S-5 | T-111 | 1600 | 5000 |
| S-8 | Tungsten | 1600 | 5000 |
| S-9 | Tungsten | 2000 | 500 |

[2]M. Deschuyter, D. L. Massart, A. Speecke, and J. Hoste, Radiochemica Acta 10: 11-14 (1968).

Table 2. continued

| Sample Number[a] | Inner Capsule[b] and Test Disk Material | Exposure Conditions Temp (°C) | Time (hr) |
|---|---|---|---|
| A-1 | TZM | 1600 | 2500 |
| A-3 | Tungsten | 1600 | 2500 |
| A-6 | Ta-10% W | 1600 | 2500 |
| A-8 | T-111 | 1600 | 2500 |
| A-2 | TZM | 1600 | 5000 |
| A-4 | Tungsten | 1600 | 5000 |
| A-7 | Ta-10% W | 1600 | 5000 |
| A-9 | T-111 | 1600 | 5000 |
| A-5 | Tungsten | 2000 | 500 |

[a]Letter S represents samples prepared by Sanders Nuclear proprietary process, while letter A designates those prepared by Savannah River Laboratory process.

[b]All outer capsules are Ta-10% W.

## D. Reactor Products Pilot Production (Production and Inventory Accounts)

| Processed Units | | Service Irradiations | |
|---|---|---|---|
| Radioisotope | Total (mCi) | Type | Number |
| Calcium-47 | 17 | Chromium | 1 |
| Silver-111 | 320 | Vanadium | 2 |
| Copper-67 | 17 | Ytterbium Oxide | 1 |
| | | Yttrium Oxide | 1 |
| | | Gold | 1 |
| Total | 354 | Total | 6 |

## E. Source Fabrication

### 1. Nickel-63

Laboratory techniques are being developed to provide a nickel-63 sample that can be incorporated in stainless steel welding rod. The purpose of the project is to develop a means for assessing defects in welds made on capsules containing chemical munitions using a radioactive tracer. It is anticipated that other isotopes in addition to nickel-63 will be used.

The sample of stainless steel wire plated with nickel-63 has been transferred to the customer for evaluation. This project is completed unless additional work is requested by the customer.

## F. Miscellaneous

### 1. HFIR Target Testing

One hydraulic tube rabbit was tested and found to meet specifications. Approximately 1000 ft of finned aluminum tubing used to fabricate removable beryllium irradiation stringers and hydraulic tube rabbits was received.

# ACCELERATOR-PRODUCED ISOTOPES - 08-01-02

## A. Biomedical Radioisotopes

### 1. Indium-111

The objectives of this program are twofold: (1) to elucidate, define and optimize pertinent production parameters (cyclotron target material, cyclotron beam energy and current conditions, adverse side reactions leading to undesirable isotopic impurities, target processing and product purification procedures, and target recovery, if necessary) and (2) to make sufficient material available to cooperative participants for their evaluation of indium-111 as a diagnostic radionuclide in medicine. Such applications would include spinal-cerebral cisternography, aerosol lung studies, delayed brain scanning, visualization of the lymphatic system, metabolic studies of indium-labeled macroaggregates and colloids, and possible applications for tumor localizations. Indium-111 has both a favorable decay scheme [gamma emissions of 173 keV (89%) and 247 keV (94%)] ideally suited for external detection and an optimal half-life (2.81 days) for labeling and distribution studies which must be carried out over 24 hr or longer. The use of indium in such lengthy studies is currently impossible with the indium-113m (1.66 hr) isotope now in general use.

A summary of the accumulated production experience obtained during the initial stages of the production development of this radionuclide is shown in Table 3. Indium-111 was produced in this initial development effort by the $^{111}Cd(p,n)^{111}In$ nuclear reaction. The $^{111}CdO$ target (96.5% isotopically enriched) was contained in a 0.060- by 1.25-in. plugged capsule void and irradiated with 22-MeV protons as described earlier.[3] The proton energy at the surface of the target material was estimated to be 16 MeV. All processing was performed using the isopropyl ether–6 M HBr extraction system described previously.[4] Data for the first three development runs (i.e., In-111-1, -2, and -3) are not shown in Table 3, since

---

[3]A. F. Rupp, Radioisotope Program (8000) Progress Report for February 1970, ORNL-TM-2910, Oak Ridge National Laboratory, pp. 7-9.
[4]A. F. Rupp, Radioisotope Program (8000) Progress Report for March 1970, ORNL-TM-2965, Oak Ridge National Laboratory, pp. 7-8.

Table 3. ORNL $^{111}Cd(p,n)^{111}In$ Production Experience for the Second Half of FY 1970

| Run Number | Target Weight[a] (mg) | Average Beam Current (μA) | Innage (hr) | Integrated Beam (μA-hr) | $^{111}In$ Cyclotron Yield[b] (mCi) | $^{111}In$ Production Rate[b] (mCi/mA-hr) | Quantity Shipped[c] (mCi) | $^{114m}In$ Contamination[b] (%) | Chemical Yield (%) |
|---|---|---|---|---|---|---|---|---|---|
| In-111-4 | 457 | 185 | 2 | 370 | 157 | 423 | 94 | 0.012 | 98 |
| In-111-5 | 383 | 182 | 2 | 363 | 177 | 488 | 99 | 0.012 | 96 |
| In-111-6 | 404 | 190 | 2 | 379 | 200 | 527 | 90 | 0.016 | 96 |
| In-111-7 | 377 | 188 | 2 | 376 | 161 | 428 | 78[d] | 0.012 | 83[d] |
| In-111-8 | 534 | 188 | 1.33 | 251 | 127 | 505 | 77 | e | 100 |
| In-111-9 | 526 | 183 | 2 | 367 | 230 | 627 | 133 | 0.011 | 99 |
| In-111-10 | 522 | 185 | 2 | 370 | 225 | 607 | 135 | 0.013 | 100 |
| In-111-11 | 436 | 187 | 1.25 | 234 | 119 | 510 | 53[f] | 0.013 | 74[f] |
| In-111-12 | 475 | 186 | 2 | 372 | 216 | 580 | 123 | 0.011 | 96 |
| In-111-13 | 381 | 185 | 1.42 | 262 | 120 | 456 | 76 | 0.014 | e |
| In-111-14 | 400 | 186 | 2 | 372 | 186 | 500 | 109 | e | 98 |
| In-111-15 | 422 | 185 | 2 | 371 | 199 | 537 | 117 | 0.011 | 99 |

[a]Target material consisted of 96.5% isotopically enriched $^{111}CdO$.
[b]Values calculated as of end of bombardment.
[c]Time reference: 8:00 AM on day after shipment.
[d]Handling losses during process, value omitted from data analysis.
[e]Not available.
[f]Yield unexpectedly low, no known losses to explain discrepancy, assay value suspected, value omitted from data analysis.

these runs were processed using an acetylacetone extraction procedure, which was subsequently discontinued due to unacceptably low chemical yields,[5] and are not considered relevant to the data shown. In Table 3 the average beam current, indium-111 thick-target production rate, indium-114m contamination, and chemical yield are characteristic of either the target, its composition and irradiation configuration, or the chemical processing employed and represent the pertinent factors most critical to this thick-target method of production. Results of the analysis of the data in Table 3 are shown in Table 4. The target recovery shown in Table 4 does not affect the production of indium-111 directly, but rather affects the economics of the production. A 5% target loss per irradiation would amount to only approximately a $15 loss for a 450-mg $^{111}$CdO target. The production rate data for In-111-4 was omitted from the data analysis due to the fact that a slightly different capsule target holder configuration was employed for this run.

Table 4. Indium-111 Production Parameters

| | |
|---|---|
| Indium-111 half-life | 2.82 days |
| Production method | $^{111}$Cd(p,n)$^{111}$In |
| Target configuration | ~450 mg 96.5% enriched $^{111}$CdO in a 0.060- by 1.25-in. plugged-cavity capsule |
| Irradiation conditions | 16-MeV protons at surface of target; average beam = 186 ± 2 μA on capsule assembly |
| Thick-target production rate | 525 ± 60 mCi/mA-hr |
| Cyclotron yield | 98 ± 11 mCi/hr |
| Indium-114m contamination at end of bombardment | 0.012 ± 0.002% |
| Chemical yield | 98 ± 2% |
| Target recovery | ≥95% |

The 1184 mCi of indium-111 produced during the development runs shown in Table 3 was supplied to cooperative participants for their applications research and evaluation. A list of the cooperative participants, their locations, and proposed uses for the indium-111 distributed is shown in Table 5.

[5]A. F. Rupp, Radioisotope Program (8000) Progress Report for November 1969, ORNL-TM-2807, Oak Ridge National Laboratory, pp. 11-12.

Table 5. Indium-111 Cooperative Participants

| Institution | Proposed Use |
|---|---|
| Palo Alto V.A. Hospital<br>Palo Alto, California | Lymph system visualization |
| Ohio State University<br>Columbus, Ohio | Tumor localization in animals and humans |
| New York State University<br>Syracuse, New York | Tumor uptake in animals |
| University of California<br>Los Angeles, California | Evaluation for diagnosis of lesions of the spinal column and the cerebrospinal fluid |
| Jackson Memorial Hospital<br>Miami, Florida | Albumin tagging experiments for application in cisternography |
| Oak Ridge Associated Universities<br>Oak Ridge, Tennessee | Comparison of tumor uptake in animals with that of gallium-67 |

Indium-111 production by the $^{112}Cd(p,2n)^{111}In$ nuclear reaction should offer great potential due to the higher cross sections for this reaction. Additional development work will be undertaken during the next quarter on this production path.

## 2. Gallium-67

The objectives of this program are to determine the optimal target configuration for gallium-67 (78 hr) production in acceptable purity and quantity and to provide gallium-67 for clinical applications research and development. Interest in this isotope has been spurred by evidence, obtained by the Medical Division of Oak Ridge Associated Universities (ORAU), of a high uptake of carrier-free gallium-67 by lymphoid tumors in both animals and humans.

Gallium-67 decays by electron capture with the emission of four main gamma rays of 93, 184, 296, and 388 keV with intensities of 40, 23, 20, and 8%, respectively. Carrier-free gallium-67 is produced by the $^{68}Zn(p,2n)^{67}Ga$ reaction by bombarding natural, high-purity zinc tubing targets (0.375-in. OD by 0.020-in. wall thickness) with 22-MeV protons in the ORNL 86-Inch Cyclotron. Irradiation of natural zinc also produces appreciable amounts of gallium-66 (9.5 hr) that must be allowed to decay before human use.

Table 6. ORNL Accumulated $^{67}Ga$ Production Experience for the 2nd, 3rd, and 4th Quarters of FY 1970

| Run Number | Average Beam Current (μA) | Innage (hr) | Integrated Beam (μA-hr) | $^{67}Ga$ Cyclotron Yield[a] (mCi) | $^{67}Ga$ Production Rate[a] (mCi/mA-hr) | Quantity Shipped[b] (mCi) | $^{66}Ga$ Contamination[a] (%) | Chemical Yield (%) |
|---|---|---|---|---|---|---|---|---|
| Ga-67-33[c] | 300 | 3.50 | 1050 | d | d | 233 | 10.7 | d |
| Ga-67-34[c] | 325 | 1.33 | 433 | d | d | 75 | 2.3 | d |
| Ga-67-35[c] | 315 | 2.17 | 684 | d | d | 139 | 12.3 | d |
| Ga-67-36[c] | 311 | 1.25 | 388 | 181 | 466 | 73 | 12.7 | 76[e] |
| Ga-67-37[c] | 317 | 2.42 | 767 | 311 | 405 | 142 | 9.9 | 88 |
| Ga-67-39[c] | 325 | 1.33 | 433 | 205 | 474 | 95 | 9.2 | 89 |
| Ga-67-40[c] | 328 | 2.00 | 656 | 302 | 460 | 80 | 10.2 | 103 |
| Ga-67-41[c] | 319 | 2.00 | 638 | 287 | 449 | 77 | 0.5 | 95 |
| Ga-67-42[c] | 322 | 2.90 | 935 | 468 | 501 | 235 | 9.8 | 94 |
| Ga-67-44[f] | 320 | 1.50 | 480 | 274 | 571 | 139 | 8.4 | 97 |
| Ga-67-45[f] | 305 | 1.92 | 584 | 275 | 471 | 98 | 0.8 | 100 |
| Ga-67-46[f] | 306 | 1.50 | 459 | 258 | 563 | 117 | 9.0 | 88 |
| Ga-67-47[f] | 311 | 1.50 | 467 | 254 | 545 | 132 | 9.0 | 101 |
| Ga-67-48[f] | 315 | 1.50 | 473 | 227 | 480 | 119 | 11.9 | 99 |
| Ga-67-49[f] | 323 | 2.25 | 727 | 401 | 552 | 104 | <0.2 | 95 |
| Ga-67-50[f] | 315 | 1.33 | 420 | 237 | 564 | 117 | 10.1 | 94 |
| Ga-67-51[f] | 306 | 4.33 | 1326 | 584 | 440 | 94 | <0.2 | 87 |

[a]Values calculated as of end of bombardment.
[b]Time reference: 8:00 AM on day after shipment.
[c]Gallium-67 separated using methyl isobutyl ketone extraction process [ref: H. B. Hupf and J. E. Beaver, Intern. J. Appl. Radiation Isotopes 21: 75 (1970)].
[d]Not available.
[e]Handling losses during processing.
[f]Gallium-67 separated using isopropyl ether extraction process (ref: A. F. Rupp, ORNL-TM-2993, p. 6).

Three gallium-67 preparations were prepared and shipped to ORAU, and fifteen smaller orders were filled for clinicians interested in the application of this radionuclide in their studies. A summary of the accumulated production experience for the last three quarters of FY 1970 is shown in Table 6. All data, unless otherwise footnoted, are for 0.375-in. OD by 0.020-in. wall thickness high-purity natural isotopic abundance zinc tube targets bombarded with 22-MeV protons. The pertinent production parameters obtained from these data are shown in Table 7. No further target or process development is planned on this radionuclide at present.

Table 7. Gallium-67 Production Parameters

| | |
|---|---|
| Gallium-67 half-life | 78.2 hr |
| Production method | $^{68}Zn(p,2n)^{67}Ga$ |
| Target configuration | 0.375-in. OD by 0.020-in. wall thickness, high-purity zinc tube, flattened |
| Irradiation conditions | 22-MeV protons<br>Av beam current = 316 ± 8 μA |
| Thick-target production rate | 495 ± 55 mCi/mA-hr |
| Cyclotron yield | 156 ± 18 mCi/hr |
| $^{66}Ga$:$^{67}Ga$ activity ratio one half-life after end of bombardment | 0.065 |
| Chemical yield | 95 ± 5% |
| Target recovery | Unnecessary, natural zinc target |

## B. Exploratory Development of Products and Techniques

### 1. Rubidium-84

The objectives of this program are to improve the technology for the production of higher purity rubidium-84. Rubidium-84 is regularly produced by the ORNL Isotopes Division by proton bombardment of natural krypton targets, but this product is unsuitable for positron camera scanning due to appreciable amounts of rubidium-83 produced simultaneously. The activity of the rubidium product obtained from proton bombardment of natural krypton in the ORNL 86-Inch Cyclotron is comprised of 9.7% rubidium-83 (83 days), 68% rubidium-84 (33 days), and

22% rubidium-86 (18.7 days) at end of bombardment. The longer half-life of rubidium-83 reduces the $^{84}Rb/^{83}Rb$ ratio even further with time. Appreciable amounts of rubidium-83 are undesirable for positron scintigraphy, because its principal gamma emissions [521 keV (46%), 530 keV (31%), and 553 keV (16%)] are similar enough in energy to the 511-keV annihilation radiation of rubidium-84 (intensity = 42%) to prevent energy resolution by the positron camera, thereby leading to increased background and loss of spatial resolution. Interest in using rubidium-84 for myocardial scanning with a positron camera has increased the demand for a higher purity product which is being made from an enriched krypton-84 target.

One rubidium-84 production run with an enriched krypton-84 target (4.2 at. % krypton-83, 88.6 at. % krypton-84, and 6.9 at. % krypton-86) was made and the product was supplied to customers. Data from the six runs performed using this material have been analyzed and the results are shown in Table 8. Cyclotron irradiations and product recoveries were performed as described previously.[6] This product is shipped as an unprocessed product without further purification.

Table 8. Rubidium-84 Production from Enriched Krypton-84[a]

| Run Number | Production Rate (mCi/mA-hr) | Product Composition (% Activity) | | | $^{83}Rb/^{84}Rb$ Activity Ratio |
|---|---|---|---|---|---|
| | | $^{83}Rb$ | $^{84}Rb$ | $^{86}Rb$ | |
| Rb-84-2 | 131 | 5.37 | 87.0 | 7.67 | 0.0617 |
| Rb-84-3 | 104[b] | 5.03 | 87.4 | 7.58 | 0.0576 |
| Rb-84-4 | 115 | 4.49 | 87.9 | 7.63 | 0.0571 |
| Rb-84-5 | 129 | 4.65 | 88.2 | 7.18 | 0.0527 |
| Rb-84-6 | 118 | 4.75 | 88.0 | 7.26 | 0.0540 |
| Rb-84-7 | 113 | 4.57 | 88.3 | 7.13 | 0.0578 |
| average | 121 ± 8 | 4.81 ± 0.33 | 87.8 ± 0.5 | 7.41 ± 0.24 | 0.0548 ± 0.0041 |

[a]Target composition: 4.2 at. % $^{83}Kr$, 88.6 at. % $^{84}Kr$, and 6.9 at. % $^{86}Kr$.
[b]Activity not all leached from target holder, omit value from average.

## 2. Cesium-129

The heavier alkali metals (i.e., potassium, rubidium, and cesium) diffuse into the myocardium relatively rapidly and can be used for heart blood flow or myocardium infarction studies. Radioisotopes of potassium [potassium-43 and rubidium (rubidium-83 and rubidium-84)] are currently under development at the ORNL Isotopes Development Center and are progressing well. To date, little has been done on the large-scale, economical production of a short-lived, low-dose radioisotope of cesium acceptable

[6]A. F. Rupp, ORNL-TM-2910, pp. 6-7.

for nuclear medical diagnostic studies. Cesium-129 (32.3 hr) which decays solely by electron capture to stable xenon-129 with accompanying 372-keV (48%), 411-keV (25%), and 548-keV (5%) gamma-ray emissions would seem to offer an acceptable half-life for production and shipment, moderate energy photons that can be either scanned or imaged, and low patient dose. Radiocesium has also been reported to be useful for pancreatic and tumor imaging.

The cyclotron production of cesium-129 has been reported by a number of workers[7,8] using approximately 36-MeV helium-4 beams to bombard iodine-127, but the production rate decreases rapidly with decreased particle energy. The excitation function maximum at approximately 36 MeV and the beam energy limitations of the new compact cyclotrons currently being installed at several locations in the United States make the $^{127}I(^{4}He,2n)^{129}Cs$ production path impractical to even the most advanced machines which are presently limited to 24-MeV helium-4 particles. This method of production does offer the advantage of a naturally abundant iodine target (iodine-127 is mononuclidic in nature), but the costs of building and operating a research cyclotron capable of producing high-energy (40 MeV) but low-current helium-4 beams are quite high compared to the costs of a compact machine.

O'Brien and Hupf[9] have prepared cesium-129 by approximately 20-MeV proton bombardment of barium-130 to form cesium-129 by a combination of the following reactions:

$$^{130}Ba(p,2n)^{129}La \xrightarrow{\beta^+,\ EC} {}^{129}Ba \xrightarrow{\beta^+,\ EC} {}^{129}Cs,$$

$$^{130}Ba(p,pn)^{129}Ba \xrightarrow{\beta^+,\ EC} {}^{129}Cs\ ,$$

$$^{130}Ba(p,2p)^{129}Cs\ .$$

The high cost of the target material ($22/mg for 20-35% enriched material) and low production rate (approximately 8 mCi/hr per 100 mg of barium-130) for this method of production work against it for the economical production of this radionuclide. If no other more practical method of production other than the $^{127}I(^{4}He,2n)^{129}Cs$ or the $^{130}Ba(p,xpyn)^{129}Cs$ is developed, cesium-129 will remain a laboratory curiosity with little or no evaluation of its nuclear medical potential.

Cesium-129 can also be produced by the $^{129}Xe(p,n)^{129}Cs$ nuclear reaction using approximately 14- to 16-MeV protons — particle energies well within the range of most cyclotrons and available at high currents for high production rates. Irradiation of natural xenon is not acceptable due to the

---

[7]V. J. Sodd, J. W. Blue, K. L. Scholz, and R. T. Anger, Cyclotron Production of $^{129}Cs$ — A Promising Radiopharmaceutical, J. Nucl. Med. 11: 362 (1970).
[8]Y. Yano, D. Van Dyke, T. Budinger, and H. O. Anger, Coronary Blood-Flow Studies with $^{129}Cs$ and the Scintillation Camera, J. Nucl. Med. 11: 378 (1970).
[9]H. A. O'Brien and H. B. Hupf, The Preparation of Carrier-Free $^{129}Cs$, $^{132}Cs$, and $^{136}Cs$, Intern. J. Appl. Radiation Isotopes (in press).

simultaneous production of appreciable amounts of longer lived, higher dose cesium radioisotopes, such as cesium-132 (6.58 days) and cesium-136 (13 days). Samples of xenon enriched in xenon-129 will be obtained for test irradiations.

Two cyclotron irradiations using natural xenon were made. If the results from these experiments are extrapolated to a product obtained from an enriched xenon-129 target, the estimated production parameters shown in Table 9 would seem feasible. Further work will be aimed at improving the production rate by reducing the gas target holder size and increasing the xenon concentrated in the proton beam.

Table 9. Estimated Cesium-129 Production Parameters

| | |
|---|---|
| Cesium-129 half-life | 32.3 hr |
| Method of production | $^{129}Xe(p,n)^{129}Cs$ |
| Target configuration | Aluminum gas target holder, 60-mil aluminum end window, ~40 psig |
| Irradiation conditions | 22-MeV protons on front of 60-mil aluminum window, ~14 MeV at back of window, extracted beam current ≈35 μA |
| Production rate | ≈780 μCi/μA-hr |
| Cyclotron yield | ≈25 mCi/hr |
| Radionuclidic composition | Cesium-129 ≥99.9%<br>Cesium-132 ≈0.05%<br>Cesium-134 <0.01%<br>Cesium-136 ≈0.01% |

## 3. Carbon-11

Carbon-11 (20.4 min) decays by positron emission ($E_{\beta^+_{max}}$ = 0.97 MeV) and is potentially useful for <u>in vivo</u> distribution and metabolic studies of labeled organic compounds. The short half-life and low dose of carbon-11 make it the only safe and practical radionuclide for such studies of this physiologically important element.

A simple experiment was performed to determine the amount of carbon-11 that could be produced on the ORNL 86-Inch Cyclotron. Three principal proton reactions can be used to produce carbon-11: $^{11}B(p,n)^{11}C$, $^{10}B(p,\gamma)^{11}C$, and $^{14}N(p,\alpha)^{11}C$. The $^{11}B(p,n)^{11}C$ reaction was selected for this experiment. A standard aluminum capsule target holder was filled with natural $B_2O_3$

target material (80.2 at. % boron-11) and welded to produce a "totally contained" capsule target. The capsule was bombarded in the ORNL 86-Inch Cyclotron for one-half hour at an average beam current of 100 μA. Thirty minutes after end of bombardment, the irradiated capsule was transferred to a cell for chemical processing.

The irradiated capsule was placed in a 2-liter, 3-neck flask. The system was closed and evacuated to a slight negative pressure. Seven hundred milliliters of 4 N HCl were slowly added to dissolve the target. After the initial reaction subsided, the mixture was stirred to complete the dissolution.

The solution was sparged with helium gas to transfer the $CO_2$ present to one of two separate traps (in series) containing 50 ml each of 1 N NaOH to trap the $CO_2$ as carbonate. After approximately 30 min, sparging was stopped. Two 100-λ samples were taken from the distillation flask and from each of the two NaOH traps.

The six samples were analyzed and their radioactivity determined by the method described by Heath[10] using a 10.0-cm source distance and a calibrated 3- by 3-in. NaI(Tl) crystal detector coupled with a 512 multichannel analyzer.

Based on the analysis, approximately 6 Ci of activity was present at end of bombardment. Results from this initial experiment indicated that approximately 12 Ci/hr of carbon-11 can be produced by bombarding $B_2O_3$ contained in a standard aluminum capsule with the ORNL 86-Inch Cyclotron 100-μA proton beam.

## C. Accelerator Pilot Production (Production and Inventory Accounts)

Table 10 gives the September 1970 accelerator irradiations and runs for ORNL and non-ORNL customers.

Table 10. Cyclotron Irradiations and Runs for September 1970

| Product | No. of Runs | Time (hr:min) Beam | Misc. | Total | Total Charges |
|---|---|---|---|---|---|
| | | ORNL Research Programs | | | |
| Barium-133m | 1 | 0:30 | 1:00 | 1:30 | $ 174.05 |
| Bismuth-205 | 1 | 7:00 | 1:00 | 8:00 | 775.00 |
| Cesium-129 | 2 | 2:00 | 2:30 | 4:30 | 441.50 |
| Europium-149 | 1 | 7:45 | 1:00 | 8:45 | 844.12 |
| Gallium-67 | 2 | 6:39 | 3:45 | 10:24 | 707.70 |
| Total | | 23:54 | 9:15 | 33:09 | $ 2,942.37 |

[10] R. L. Heath, Scintillation Spectrometry, 2nd Ed., Vol. I, IDO-16880-1 (1962).

Table 10. Continued

| Product | No. of Runs | Time (hr:min) Beam | Misc. | Total | Total Charges |
|---|---|---|---|---|---|
| | | Non-ORNL Research Programs | | | |
| Gold-195 | 1 | 4:00 | 1:15 | 5:15 | $ 1,306.77 |
| Cobalt-57 | 1 | 48:00 | 1:15 | 49:15 | 8,414.64[a] |
| Rubidium-84 | 1 | 7:00 | 1:15 | 8:15 | 2,022.33 |
| Yttrium-87 | 2 | 5:15 | 2:30 | 7:45 | 1,255.20 |
| Total | | 64:15 | 6:15 | 70:30 | $12,998.94 |

[a]Purchased but not shipped.

## FISSION PRODUCTS - 08-01-03

### A. Krypton-85 Enrichment

The 195 Ci of product enriched to 15.97% krypton-85 was removed from unit AB (see Fig. 1) and transferred to the Sales Department. In addition, 205 Ci of 18.71% krypton-85 was removed from unit B, 148 Ci at 12.08% was removed from unit C, and 181 Ci at 16.53% was removed from unit D and temporarily stored.

The depleted material in the end sections of units AB, B, C, CD, and D was removed. Units AB, B, C, and D were reloaded with normal fission product krypton for first pass runs, and unit CD was reloaded with the product noted above from units B, C, and D for a high-level run. The present status of all units is shown below. The count rates indicate the relative levels of enrichment.

| Unit | Activity in Unit (Ci) | Time Since Last Product Removal (days) | Count Rate in Product Section (counts/min) Aug 1970 | Sept 1970 |
|---|---|---|---|---|
| A | - | 134 | - | - |
| AB | 1537 | 10 | 13,250 | 10,000 |
| B | 1406 | 10 | 10,600 | 7,850 |
| C | 1566 | 10 | 7,000 | 7,600 |
| CD | 2281 | 183 | 7,600 | 9,650 |
| D | 1360 | 10 | 9,450 | 5,900 |

The cooling tower and enrichment units were cleaned by circulating Calgon tower cleaner in the water. This routine cleaning of the system will be done every three months.

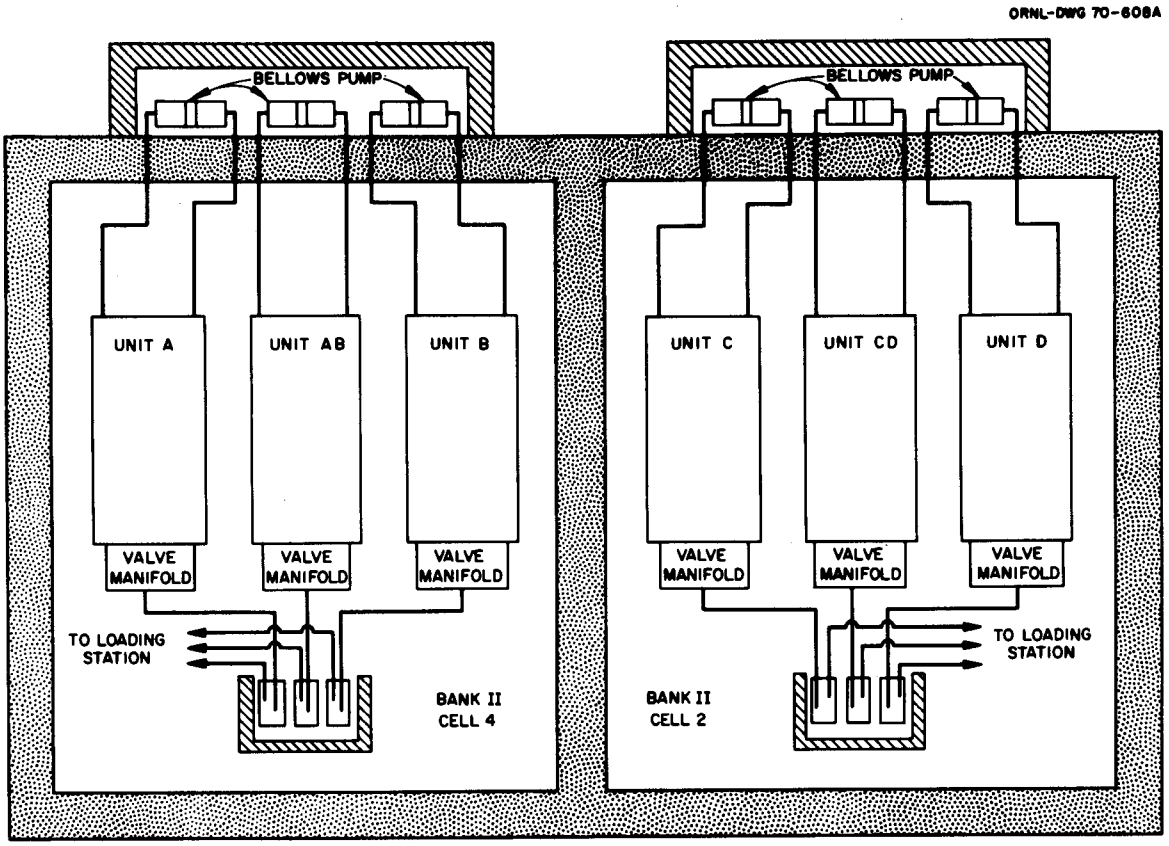


Fig. 1. Schematic Arrangement of Krypton-85 Columns.

## B. Separation and Purification of Krypton-85 and Fission Xenon

A program to purify 1000 liters of fission xenon to a krypton-85 contamination level of less than 15 μCi/liter at STP has been started and is progressing. The existing krypton-85 purification system is being used for this program. We now have on hand approximately 100 liters of xenon containing 13 μCi of krypton-85 per liter of xenon. An additional 250 liters of xenon has been decontaminated to a level of 28 μCi of kyrpton-85 per liter. One recycle of this gas should remove the krypton-85 to the acceptable limit. This material will be provided to Battelle Northwest Laboratory.

## C. Production and Materials Studies

### 1. New Strontium Die Design

Calculations were made for an experimental 3-in.-diam strontium pellet die to be made of TZM. The die would be operated at 1300°C with a pressure loading of 3000 psi. The yield point of TZM is 33,000 psi at 1300°C. Using the formula for stress in a thick-walled cylinder and limiting the maximum stress in the wall to 50% of the yield point, we calculated the required wall thickness to be 0.3 in.

A die consisting of an ATJ graphite liner with a TZM structural member was also examined. Of major concern was the differential expansion which would be experienced. The coefficient of thermal expansion is $5.3 \times 10^{-6}/°C$ for the TZM and $2.69 \times 10^{-6}/°C$ (parallel to grain) and $4.92 \times 10^{-6}/°C$ (perpendicular to grain) for ATJ graphite.

If we assume an ATJ graphite liner 0.25 in. thick and fitted into the TZM cylinder with no clearance at 20°C:

$$ATJ_{OD \text{ at } 1300°C} \text{ (with grain)} = 3.5 + (3.5)(2.69 \times 10^{-6})(1280) = 3.512 \text{ in.}$$

$$ATJ_{OD \text{ at } 1300°C} \text{ (perpendicular to grain)} = 3.5 + (3.5)(4.92 \times 10^{-6})(1280) = 3.522 \text{ in.}$$

$$TZM_{ID \text{ at } 1300°C} = 3.5 + (3.5)(5.3 \times 10^{-6})(1280) = 3.524 \text{ in.}$$

If we assume no elasticity in the graphite a crack 0.006 in. wide can develop in the die body as a result of the pressure exerted by the ram:

$$\Delta C = \pi(TZM_{ID} - ATJ_{OD})$$

$$\Delta C = \pi(3.524 - 3.522)$$

$$\Delta C = 0.006 \text{ in.}$$

The die would probably withstand a 0.002-in. discrepancy in diametrical clearance since the graphite would have some small amount of ductility at 1300°C. However, to obtain the grain orientation to limit the mismatch to 0.002 in. would be difficult and the parts would have to be shrink-fitted together.

## 2. Strontium-90 Fuel Form Compatibility

Two $^{90}SrTiO_3$-Hastelloy C compatibility couples, being exposed in a muffle furnace at 1100°C, have accumulated 5160 hr of exposure time as of September 27, 1970.

Metallographic examination of a nonradioactive $SrTiO_3$-Hastelloy C couple exposed at 1100°C for 1000 hr is in progress. Initial observation revealed that the extent of attack on the test specimen was slight, although somewhat more than the one exposed at 1100°C for 500 hr.

An attempt is being made to identify the secondary phase precipitated in Hastelloy C, which had been in contact with nonradioactive SrO at 1100°C for 1000 hr. The secondary phase has been separated from the alloy by dissolving away the metal and will be analyzed by chemical analysis and/or X-ray diffraction. The result may reveal roles played in the corrosion of Hastelloy C by the residual potassium in SrO and silicon and other minor elements in the alloy.

A separate experiment has been carried out in the jacketing of nonradioactive SrO with foils (approximately 5 mils) of Hastelloy C and

Inconel in a hot press during the pellet pressing process. The purpose of the experiment was to investigate whether the hygroscopic SrO pellet can be protected prior to encapsulation (in a Hastelloy C container) by this jacketing technique. An alloy that is the same as or similar to the capsule material was used as a jacket to avoid or minimize attacks caused by the presence of dissimilar materials. The result indicates that the hot-pressed jacket-pellet combination remained sound for approximately 1 week in air before it started to rupture around the edges of the top end surface.

## D. Cesium-137 Gamma Source Development

### 1. Cesium Source Form Development

Cesium-137 chloride has been the compound of choice for radiation sources in applications of moderate temperature conditions. In many respects cesium chloride is the ideal compound; the cesium weight per unit volume is high, the radiation resistance of the CsCl is excellent, the compatibility with stainless steel at ambient temperatures is excellent, and its preparation is straightforward. However, the projected conditions of use of cesium-137 gamma sources are increasingly severe with respect to temperature, and some applications indicate the need for a cesium source material which has low solubility. In view of these projected conditions of use, the testing of $^{137}CsCl$ at elevated temperatures is being done and the development of a low solubility, temperature resistant source form of cesium is being studied.

#### a. Cesium Niobate

The exploratory experimental work on feasibility of producing cesium niobate, a compound with low solubility and good thermal stability has begun. The major activity this month covered the preparation of cesium niobate by Method 2 outlined in the previous report[11] which involves a simultaneous solvent extraction-chemical reaction. Some work on Method 1 (molten $CsOH$-$Nb_2O_5$ reaction) was also carried out. Since one of the reactants, CsOH, was not available at that time, it was prepared from CsCl by the anion exchange method. The result of chemical analysis for the CsOH material produced in this way is not yet available.

In the investigation of Method 1, high-purity CsOH and $Nb_2O_5$ in a Pyrex glass reaction vessel were gradually heated to slightly above the melting point of CsOH (approximately 270°C) and were allowed to react. The initially fluid melt at this temperature eventually became a pasty mass. During this process, some bubbling phenomenon was observed, probably indicating that the reaction was proceeding according to:

$$2CsOH(melt) + Nb_2O_5(s) \rightarrow 2CsNbO_3(s) + H_2O(g)\uparrow \qquad (1)$$

[11] A. F. Rupp, ORNL-TM-3133, p. 12.

Upon further increase in temperature (up to 500°C) and reaction time, the reaction mixture turned into a hard mass.

In the investigation of Method 2, niobium pentachloride of 99+% purity was first dissolved into the cp reagent grade $CCl_4$ under agitation. From the chemical analysis, the solubility of $NbCl_5$ in $CCl_4$ was estimated to be 0.5-0.6 wt %. However, the solution seemed very unstable in air, producing white gelatinous suspensions within a few minutes that would remain stable for several hours. The quantity of suspensions increased with time, eventually exhausting the amount of $NbCl_5$ originally dissolved in $CCl_4$ in approximately 24 hr. The suspensions appear to be hydrous pentoxides, $Nb_2O_5 \cdot xH_2O$, which probably formed through the following reaction mechanism in the $CCl_4$ solution:

$$2NbCl_5 + \underset{\text{(air)}}{O_2} \rightarrow 2NbOCl_3 + 2Cl_2\uparrow \qquad (2)$$

$$2NbOCl_3 + \underset{\text{(moisture)}}{(3 + x)H_2O} \rightarrow Nb_2O_5 \cdot xH_2O\downarrow + 6HCl \qquad (3)$$

$$3NbCl_5 + \underset{\text{(moisture)}}{(6 + x)H_2O} \rightarrow Nb_2O_5 \cdot xH_2O\downarrow + 12HCl + NbOCl_3 \qquad (4)$$

Because of the instability of $NbCl_5$ in $CCl_4$ in the presence of air and moisture, the solution was prepared in a glove box that had been previously purged with dry argon gas. The $NbCl_5$ solution was then brought into contact with a 6% CsOH solution in a separatory funnel by the scheme of batchwise cocurrent multiple contact. This operation was carried out by contacting the CsOH solution with an equal volume of fresh saturated $NbCl_5$ solution five times at room temperature. In this way, $NbCl_5$ transferred to the aqueous CsOH phase would be hydrolyzed to produce $Nb_2O_5 \cdot xH_2O$ according to Eqs. (3) and (4) which in turn probably reacts with CsOH to form $CsNbO_3$ as follows:

$$Nb_2O_5 \cdot xH_2O \rightarrow H_2Nb_2O_6 \cdot (x - 1)H_2O \qquad (5)$$

$$H_2Nb_2O_6 \cdot (x - 1)H_2O + 2CsOH \rightarrow 2CsNbO_3\downarrow + (x + 1)H_2O \qquad (6)$$

The white precipitates in the aqueous layer were then slowly heated to 700°C in a muffle furnace, and the temperature maintained for approximately 2 hr. No sign of melting was noted at this temperature. After samples were taken the material was calcined at 1375°C for approximately 1 hr. Melting of the material appeared to have taken place at approximately 1350°C.

The products resulting from Method 2, heated at both 700°C and 1375°C had the compositions shown in Table 11. No analytical data are available at present for products from Method 1. The X-ray diffraction pattern of sample 129-3C did not match any of the patterns for the starting and intermediate compounds (i.e., $NbCl_5$, $NbOCl_3$, $Nb_2O_5$, and CsCl), indicating

that some new compound or compounds formed. According to Table 11, the niobium content declined somewhat after heating at 1375°C (as compared with that at 700°C), while the cesium content remained almost unchanged. The amount of chlorine is extremely low. Although the atomic ratio of various elements does not correspond to any of the simple compounds known, both the chemical and X-ray analyses indicate that cesium is in combination with a portion of niobium atoms in some compound form (possibly $CsNbO_3$).

Table 11. Composition of Cesium-Niobium Compounds

| Constituent | Sample 129-3[a] | | Sample 129-3C[b] | |
|---|---|---|---|---|
| | wt % | g-atom / 100-g mixture | wt % | g-atom / 100-g mixture |
| Niobium | 60.1 | 0.65 | 50.2 | 0.54 |
| Cesium | 14.0 | 0.11 | 14.0 | 0.11 |
| Chlorine | 0.9 | 0.03 | 0.03 | 0.00 |
| Balance[c] (including oxygen) | 25.0 | 1.56[d] | 35.8 | 2.44[d] |

[a]Heated at 700°C.
[b]Heated at 1375°C.
[c]Calculated by the difference.
[d]Assume the balance is all oxygen.

The solubility of sample 129-3C was investigated in concentrated and 3 N $HNO_3$, concentrated and 3 N HCl, and NaOH solutions. Visual observation showed no apparent chemical or physical interaction between the sample and the solvents listed above.

### b. Cesium Selenate

A thorough literature search was made to determine the physical properties of cesium selenate, but this information is apparently not available. Therefore, cesium selenate was prepared in the laboratory and rough measurements were made of the physical properties.

Selenium dioxide was heated with cesium carbonate at approximately 350°C. The reaction produced a white solid which melted at approximately 1010°C. This method was deemed the most desirable of several tried. Although the reactants are mixed as dry powders, selenium dioxide melts producing a liquid-solid reaction. The physical properties of both compounds are shown below:

| Property | CsCl | $Cs_2SeO_4$ |
|---|---|---|
| Melting point, °C | 646 | ~1010 |
| Density, g/cm$^3$ | 3.97 | ~3.8 |
| Solubility at 20°C, g/100 ml of $H_2O$ | 185.7 | 225 |
| Molecular weight | 168.37 | 408.78 |
| Cesium atoms/cm$^3$ | $1.41 \times 10^{22}$ | $1.11 \times 10^{22}$ |

A comparison of the properties of the two compounds indicates that very little, if any, advantage would be gained by substituting the selenate compound for the chloride. A higher melting point in the selenate is offset by the drop in the activity per unit weight and volume produced by the combination of lower density and higher molecular weight of the selenate. Cesium selenate is hygroscopic and both compounds are rather soluble in water.

### 2. Cesium-137 Source Form Characterization

The purpose of this task is to characterize cesium-137 source forms for operational and safety requirements. The objective of the current study is to find a means of eliminating the solid-solid phase transition which occurs at 469°C with an accompanying volume increase.

When a mixture of CsCl-KCl is subjected to a number of melting-cooling cycles, there is a possibility that the composition of the mixture may shift appreciably due to the fact that CsCl is somewhat more volatile than KCl. This situation would cause changes in the DTA results as well as the high temperature X-ray diffraction results.

To investigate this type of problem, individual batches of 2 mole % KCl-CsCl contained in loosely capped quartz vials were subjected to heat treatments following a scheme similar to that used in the DTA and high-temperature X-ray diffraction experiments (four melting-cooling cycles). Three batches of mixtures were left in a furnace for extended periods of time (one at 500°C for more than 24 hr, the second one at 400°C for more than 24 hr, and the third one at 400°C for approximately 1 week). The result of chemical analysis has revealed no definite trend in the variation of the KCl content (up to ±6% change) with time and temperature. The major factor for such variation could be attributable to experimental errors especially in view of the very low KCl content involved.

A new heating stage has been acquired recently for an existing X-ray unit, and preparation is under way to resume the high-temperature X-ray diffraction study for selected CsCl-KCl mixtures. Also in progress is the calibration of a dilatometer that will be used in obtaining thermal expansion data for the CsCl-KCl system. This type of data will be useful not only in the design of cesium-137 source forms but also as a supplement to the X-ray and DTA results to characterize the source compounds.

## E. Cesium-137 Pilot Production (Production and Inventory Accounts)

### 1. Processing and Process Status

| Item | Cesium-137 (Ci) |
|---|---|
| In-process material | 173,000 |
| Cesium-137 chloride products | 103,000 |
| Sources in fabrication | 0 |
| Completed sources awaiting shipment | 47,000 |

### 2. Operational Summary

| Cesium-137 | September 1970 Number | September 1970 Amount (Ci) | FY 1971 Number | FY 1971 Amount (Ci) |
|---|---|---|---|---|
| HAPO shipments received | 0 | 0 | 0 | 0 |
| Product batches prepared | 0 | 0 | 0 | 0 |
| Sources fabricated | 0 | 0 | 39 | 9,100 |
| Special form cans loaded | 0 | 0 | 7 | 77,000 |
| Sources shipped to customers | 0 | 0 | 260 | 129,000 |
| Special form cans shipped to customers | 0 | 0 | 7 | 77,000 |

### 3. Current Orders

A list of current orders for cesium-137 source fabrication or powder is shown below:

| Customer | Amount (Ci) | Estimated Shipping Date |
|---|---|---|
| Brookhaven National Laboratory | ~203,000 | March 1971 |
| Atomic Energy of Canada | 20,000 | November 1970 |
| Radiochemical Centre, England | 20,000 | April 1971 |
| C.E.A., France | 200,001 | April 1971 |
| Radiation Resources, Inc. | 200,001 | To be scheduled |
| Miscellaneous orders | ~1,000 | November 1970 |

Commitments for bulk powder awaiting source fabrication or shipment include American Nuclear Corporation, 174,300 Ci; Atomic Energy of Canada, 160,000 Ci; and Radiation Resources, Inc., 40,000 Ci.

## F. Strontium-90 Pilot Production (Production and Inventory Accounts)

### 1. Processing and Process Status

Maintenance and revisions in the strontium-90 pelletization cell were completed. Although a complete decontamination was not effected, entry was gained by the use of temporary shielding, and no personnel exposure problems were encountered. Work accomplished included:

a. Installation of new electrical services, both normal service and supply for the resistance-heated hot press.

b. Removal of out-of-service equipment and sealing of penetrations to the cell.

c. Provision of inert gas supply lines both to the cell proper and to the several fittings on the hot press.

d. Installation of the equipment required for cell atmosphere control. This included a standpipe on one cell ventilation outlet and a removable blank plate on the other outlet, a removable seal plug

for the cell floor drain, improved design air locks, and a control system which supplies inert gas (or air) on a demand basis to maintain a pre-selected draft in the cell.

e. Installation of new hydraulic lines.

f. Installation of a cell air cooling system consisting of a chilled water coil and a recirculating fan.

g. General repairs to services such as cell lighting, thermocouple lines, and water supplies.

Checkout of the cell was accomplished; then an improved model resistance-heated hot press was installed along with its associated equipment. The cell atmosphere control system worked well. An argon flow of approximately 5 $ft^3$/min will maintain a draft of -1 in. w.g. in the cell and provide a low-oxygen atmosphere for hot-pressing operations. Although some changes in plans for cell modifications had to be made due to the necessity for getting the cell into service quickly, the essential repairs and revisions were made. Completion of the work in the pelletization cell also provides for strontium-90 processing, since the hot press will be used for calcination of strontium-90 fuel materials. Thus, the need for replacement of the calcining furnace in the strontium-90 processing cell was eliminated. Replacement of the calcining furnace would be an undertaking requiring weeks of decontamination and considerable expense for new equipment.

The new hot press installed in the strontium-90 pelletization cell was similar in design to the experimental model which had been installed in another cell on a temporary basis.[12] However, it had some significent improvements. In addition to the improved insulation and different element mountings which had been indicated by test work with the original model, this press incorporated some changes which were the result of operational experience. These seemingly minor adjustments were of considerable benefit in improving the in-cell handling aspects of the unit. They included different methods of introducing argon to the furnace interior, a flowing argon cooler for the hydraulic ram, and a method for manipulating the furnace doors by means of cables and winches operated by manipulators.

Experience with the new hot press has been good. Exclusive of test runs with nonradioactive material, 11 runs have been made. The average density of the nine pellets (all 2.82 in. in diameter) which have been pressed to date is 4.4 g/$cm^3$, with the average power density being 0.85 W/$cm^3$. The operating cycle (loading-heating-pressing-cooling-unloading) is about 12 hr. This can probably be improved by taking advantage of the low-oxygen cell atmosphere and opening the furnace at higher temperatures.

---

[12]A. F. Rupp, ORNL-TM-3133.

The $^{90}SrTiO_3$ pellets currently on hand are given below:

| Pellet No. | Power (W) | Powder Density ($W/cm^3$) | Density ($g/cm^3$) |
|---|---|---|---|
| 1R | 251 | 0.717 | 3.8 |
| 2 | 248 | 0.759 | 4.1 |
| 3 | 125 | 0.722 | 4.0 |
| 4 | 124 | 0.854 | 4.7 |
| 5 | 308 | 0.695 | 3.6 |
| 6 | 153 | 0.792 | 4.1 |
| 7 | 178 | 0.901 | 4.2 |
| 8 | 154 | 0.868 | 4.5 |
| 9 | 154 | 0.831 | 4.3 |
| 10 | 154 | 0.814 | 4.2 |
| 11R | 248 | 0.854 | 4.6 |
| 12 | 150 | 0.886 | 4.7 |
| 13 | 150 | 0.846 | 4.5 |
| 14 | 177 | 0.864 | 4.5 |
| | 2,574 | | |

Pellets 1R through 5 were made on the experimental press. The others were made on the new hot press and should be representative of pellets of this type. In order to utilize old $^{90}SrTiO_3$ from storage for the large orders now on hand (five 750-W and three 300-W Sentinel sources), pellet densities will need to average about 4.3 $g/cm^3$ and indications are that this average can be realized. All the pellets listed except 7 were made from $^{90}SrTiO_3$, representative of the stored material, with power concentrations ranging from 0.190 to 0.195 W/g. Pellet 7 was made from new material with a power concentration of 0.216 W/g.

Fabrication of the 2.82-in.-diam pellets was stopped temporarily due to troubles encountered in the welding of test pieces for the Sentinel sources in which the pellets are to be used. Decanning, assay, and blending of stored $^{90}SrTiO_3$ products continued. This program is approximately 75% complete; all of the $^{90}SrTiO_3$ which was produced at the Quehanna facility except for some Hastelloy C encapsulated sources has now been removed from storage for use in source fabrication.

The current strontium-90 process status is as follows:

| Item | Strontium-90 (Ci) |
|---|---|
| In-process material | 1,390,000 |
| Strontium-90 titanate products | 639,000 |
| Sources in fabrication | 500,000 |
| Completed sources awaiting shipment | 103,000 |
| Returned SNAP sources | 325,000 |
| Total | 2,957,000 |

## 2. Operational Summary

| Strontium-90 | September 1970 Number | September 1970 Amount (Ci) | FY 1971 Number | FY 1971 Amount (Ci) |
|---|---|---|---|---|
| HAPO shipments received | 0 | 0 | 0 | 0 |
| Product batches prepared | 0 | 0 | 0 | 0 |
| Sources complete | 0 | 0 | 0 | 0 |
| Special form cans loaded | 0 | 0 | 0 | 0 |
| Shipments to customers | 1 | 100 | 1 | 100 |

## 3. Current Orders

A list of current orders for strontium-90 source fabrication or powder is shown below:

| Customer | Amount (Ci) | Estimated Shipping Date |
|---|---|---|
| Isotopes, Inc. | 153,000 | November 1970 |
| U. S. Navy | 557,000 | October 1970 |
| U. S. Navy | 208,000 | To be scheduled |
| Sanders Associates, Inc. | 30,000 | October 1970 |
| Mitsubishi International Corp. | 10,000 | October 1970 |
| Miscellaneous orders | ~1,000 | November 1970 |

A strontium-90 source containing approximately 105,000 Ci is on hand awaiting shipping instructions from Isotopes, Inc.

## 4. Source Fabrication

Two cells were cleaned to low contamination levels and set up for encapsulation of Sentinel strontium-90 sources. A test weld was made on a Sentinel test piece preparatory to starting the fueling of these sources. Inspection of the test piece showed a crack in the finishing area of the weld. The closure for the Sentinel-type source is a threaded cap, which is seal welded. The test weld samples which were to be used in this run differed from samples used in previous runs in that the threaded area was shorter. However, the shorter cap is about seven times thicker than the specified weld depth. It was also noted that the clearance between the cap threads and the matching housing threads was larger than it had been on similar samples welded in the past. This led to an inspection of the threads on all of the Sentinel encapsulation pieces — both capsules and test weld samples — which had been supplied by the customer. In all cases the housing (internal) threads were larger than the specified thread, although in some cases the pieces matched within tolerance due to the cap (external) threads also being large. Four more test welds were made. Two of these were on thick-cap test pieces left over from previous work, one of which had a clearance between threads which was at the upper limit of the allowable range. In both cases a good weld resulted. The other two welds were made on short-cap pieces selected so that one represented a clearance near the midpoint of the range and the other a clearance at the high point. The former weld was good, but the latter cracked. All encapsulation materials were returned to the customer for reworking.

G. Short-Lived Fission Products Pilot Production (Production and Inventory Accounts)

| Isotope | Number of Batches | Amount (Ci) |
|---|---|---|
| Xenon-133 | 2 | ~800 |
| Iodine-131 | 1 | 25 |
| Mixed fission products | 1 | 3 |
| Total | | 828 |

H. Strontium-90 Silicate Beta Sources

1. Matrix Studies

Graphite flour and organic binders were procured, and preliminary experiments were performed in connection with graphite matrix studies for the strontium-90 silicate beta sources. It will be necessary to procure dies and set up a curing furnace before further progress can be made.

An extrapolation chamber has been borrowed from the Radiation Dosimetry Research Group for the measurement of beta source output. It will be necessary to procure the electronic components since theirs were still in use.

APPLICATIONS AND TECHNOLOGY SUPPORT - 08-01-04

A. Low-Energy Gamma and Secondary X-Ray Sources

1. Literature Survey on Americium-241

A great amount of interest has been expressed in low-energy X-ray and gamma sources. A literature survey is being made to determine the availability, uses, and methods of fabrication of the sources. Americium-241 decays to yield predominantly photons of approximately 60, 26, and 33 keV. Americium-241 source calibration is needed infrequently because of the long half-life (433 years). Americium is becoming more available, and the price has recently been reduced to $150/g.

2. Samarium-151

Radioactive sources of low-energy (0-30 keV) should prove very useful as thickness gages, in fluorescent X-ray analyses and for many other uses. Such sources are being investigated to see if the radiation output can be improved.

Samarium-151 as $Sm_2O_3$ containing 2287 mCi was fabricated as a thin circular plaque source in an effort to obtain the maximum output of the 21.6-keV photon. Ninety milligrams of samarium (95% samarium-151) as $Sm_2O_3$ was mixed with urethane and pressed between two pieces of ~2-mil

aluminum foil. The top aluminum foil was removed and the pressed pellet was placed into the source holder. Ten drops of diluted urethane were added to the cavity in the source capsule. A 0.0001-in. nickel window was placed over the source pellet and bonded to the edges of the source holder with epoxy resin.

Samarium-151 decays with a half-life of approximately 90 years, emitting low-energy beta radiation and approximately 0.06% of 21.6-keV gamma radiation. The gamma radiation is largely converted in the L shell, yielding L X rays of europium.

The radiation from the source was measured by placing it 18.8 cm from a Si(Li) detector connected to a 400-channel analyzer. In Fig. 2 is shown the spectrum of bremsstrahlung, L X rays, and the 21.6-keV photons.

Integrating the 21.6-keV photopeak (Fig. 2) and removing background and bremsstrahlung radiation, it was computed that 471.8 photons/sec were detected by the Si(Li) crystal at a distance of 18.8 cm.

Correcting the counts/sec for distance and efficiency of the detector for 21.6-keV energy, the total photon emission rate in the $4\pi$ direction is calculated to be $4.2 \times 10^6$/sec. The radioactive source has a diameter of 0.8 in. and an area of 3.203 $cm^2$. The photons/$cm^2$.sec from the source is calculated to be $1.31 \times 10^6$. There is absorption of the 21.6-keV photon within the source and in the air between the source and the detector. The 0.005-in. beryllium window over the Si(Li) crystal also absorbs a portion of this low-energy gamma. The calculated total absorption of the 21.6-keV gamma by air and the beryllium window is <1.5%, but self-absorption within the source is large.

The L X rays of europium and samarium are also shown in Fig. 2. Conversion of the 21.6-keV gamma as it passes through the electron shell of the europium-151 atom produces the L X ray of europium, and interaction with the source material ($Sm_2O_3$) produces L X rays of samarium.

## B. Radioisotope Characterization, Quality Control, and Standards

### 1. Radioisotope Characterization

Our program continues on half-lifes and decay characteristics of useful radionuclides. The final value for cesium-137 was 30.18 ± 0.10 years, made by direct measurement of gamma decay as a function of time. L. A. Dietz of Knolls Atomic Power Laboratory has just sent a letter indicating that his current value by mass spectrometry is 30.27 ± 0.05 years, and the weighted mean by several methods reported by Harbottle[13] was 30.13 years. Our recommendation of values for the half-lives of tritium and plutonium-238, 12.31 ± 0.05 and 87.6 ± 0.2 years, respectively, made in January 1967, are insignificantly different from those of Sher[14] of

[13] G. Harbottle, Radiochim. Acta 13: 132 (1970).
[14] R. Sher, Half-Lives of $H^3$ and $Pu^{238}$, BNL-50233, Brookhaven National Laboratory (April 1970).

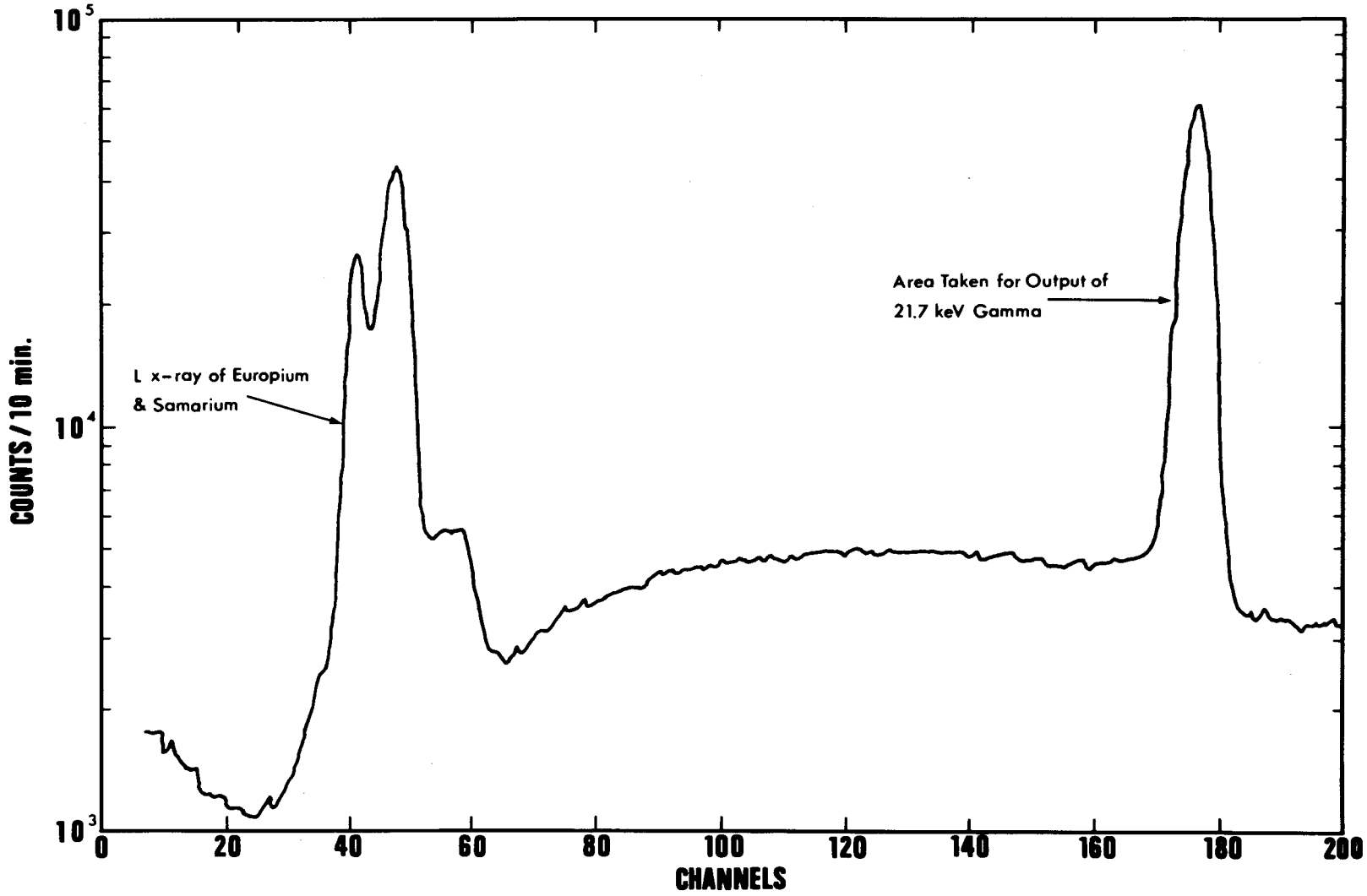


Fig. 2. Radiation from Samarium-151 Source.

Brookhaven National Laboratory, 12.30 ± 0.04 and 87.7 ± 0.1 years, respectively, though our error estimates are somewhat more conservative. In answer to inquiries, sources of information on X-ray and gamma energies and intensities were suggested.

### 2. Radioisotope Special Analysis and Quality Control

Standard radioactive materials continue to be of major interest in quality control. There are occasional opportunities to compare the products of different manufacturers of standards with our own calibrations and with each other. Thus, as reported earlier, two calcium-45 standards and three sulfur-35 standards were compared, with disappointing results. Currently, standards of silver-110m are on order from three suppliers, and our preliminary value on the one which has arrived is 14% different from that of the manufacturer. The National Bureau of Standards has prepared a set of ampules of solution of a medically important nuclide for a "round robin" by the College of American Pathologists, and we shall receive one of the ampules. Our measurement will be compared with those of NBS and the round robin participants, who are medical-research and hospital personnel using radioisotopes in patients. A useful and authoritative report on standards has just been published.[15]

Recommendations of analytical methods for special projects are often required. For analysis of metals for nitrogen, oxygen, and hydrogen, conventional vacuum fusion was suggested, and spark source mass spectrometry was indicated for other components. Normal mass spectrometry was recommended for gaseous mixtures containing tritium. Radiochemical analysis was suggested for transuranic nuclides in salt; nondestructive techniques did not appear practical. An AEC request for information on measurement of gamma activity was fulfilled by forwarding a copy of an ASTM method, with appropriate comment.

## C. Radioisotope Safety

### 1. Surveillance of Regulations and Cask Evaluations

The abstract of a paper entitled "Containers for Shipment of Radioactive Material" has been submitted to the University of Virginia. The paper will be delivered at the Second Annual Conference on Transportation of Radioactive Material at Charlottesville, October 25-27, 1970.

An abstract of a paper entitled "The Design and Testing of a Lithium Hydroxide Shielded Case for the Transportation of Fast Neutron-Emitting Heat Sources" has been submitted for consideration to the Program Committee of the Third International Symposium on the Packaging and Transportation of Radioactive Materials. This meeting is to be held at Richland, Washington, August 16-21, 1971.

---

[15] W. B. Mann and S. B. Garfinkel, Radioactivity Calibration Standards, NBS Spec. Publication 331 (August 1970).

### a. Review of Regulations

Comments are being assembled for submission to the Oak Ridge Operations Office on the Proposed Revisions to the IAEA Regulations for the Safe Transport of Radioactive Materials.

### b. Cask Testing

The outdoor test of the heat dissipation and neutron shielding capabilties of the Lithium Hydroxide Shielded Curium Cask is continuing. A visual inspection of the shielding material revealed the formation of fissures at locations corresponding to higher radiation readings. The hydroxide appeared to be partially dehydrated, undoubtedly due to the original loading of the casks in a controlled low-humidity area. A total of 12 gal of distilled water was added to the hydroxide periodically during the month, and the diffusion of the water throughout the cask was mapped by taking surface radiation measurements. As the moisture content of the hydroxide is increased, crystal growth has been noted, accompanied by the closing of the fissures. Crystals orginally having the consistency of superfine granulated sugar are now the size of ice cream salt.

Combined radiation dose rates, including fast, intermediate, and thermal neutrons and gamma, are now well below those permitted in general transport. When the diffusion of the water is completed, the final tamping of the hydroxide will be initiated.

Radiochemical analyses of the hydroxide after one month of exposure to the neutron dose of $1 \times 10^9$ n/sec indicate a possible buildup of tritium of a few counts above background. No other activation products were detected.

## 2. Tests of Luminous Light Sources

### a. Promethium-147 Self Luminous Light Sources

An evaluation of certain problems associated with the use of promethium-147 luminous paint in rifle sights was made for the Safety Office of Aberdeen Proving Ground, Maryland.

The hazard to the eye of a person using a rifle equipped with this type of sight was considered to be small. The source material, promethium-147 (average beta energy = 0.067 MeV) ceramic microspheres mixed with ZnS phosphor and plastic, would have a density comparable with that of aluminum. Even the most energetic betas (0.23 MeV) are stopped by approximately 0.008 in. of aluminum,[16] and it was considered unlikely that promethium-147 betas would escape from the source material in quantities sufficient to be a hazard to the eye at a distance of 5 cm from the source.

---

[16]U. S. Department of Health, Education, and Welfare, Radiological Health Handbook, PB 121784R (September 1960), p. 155.

Several radiation survey instruments were tested to determine their ability to detect small amounts of promethium-147 contamination on hands, clothing, and smears. The detector responses to six promethium-147 sources, ranging from 0.45 to 0.0045 μCi, were determined at source-to-detector-window distances of 1.8, 3.4, and 5.1 cm. These sources were made by evaporating measured volumes of a standard promethium-147-HCl solution on mylar films. The active surfaces of the sources were approximately 1 $cm^2$. The response of the detectors (Table 12) was nearly proportional to the amounts of activity in the sources. The variations were caused by small errors in measuring distances, source geometry, and counting geometry.

Table 12. Response of Detectors to Radiation from Promethium-147 Sources at Various Distances

| Distance (cm) | Amount of Promethium-147 in Source (μCi) | | | | | |
|---|---|---|---|---|---|---|
| | 0.45 | 0.09 | 0.045 | 0.023 | 0.013 | 0.0045 |
| ORNL 1.4-mg/$cm^2$ G-M Tube and Scaler (counts/min) | | | | | | |
| 1.8 | 19,675 | 4,454 | 2,472 | 1,226 | 973 | 280 |
| 3.4 | 7,551 | 1,594 | 873 | 411 | 348 | 100 |
| 5.1 | 3,437 | 747 | 405 | 181 | 139 | 35 |
| ORNL 2-mg/$cm^2$ G-M Tube Survey Meter (counts/min) | | | | | | |
| 1.8 | 4,100 | 750 | 450 | 225 | 140 | 0 |
| 3.4 | 1,350 | 350 | 150 | 90 | 50 | 0 |
| 5.1 | 660 | 150 | 70 | 50 | 0 | 0 |
| Commercial Instrument 1.2-mg/$cm^2$ G-M Tube Survey Meter (counts/min) | | | | | | |
| 1.8 | 3,840 | 840 | 440 | 240 | 140 | 0 |
| 3.4 | 1,340 | 340 | 140 | 100 | 20 | 0 |
| 5.1 | 640 | 140 | 60 | 20 | 0 | 0 |
| U. S. Army Survey Meter (mR/hr) | | | | | | |
| 1.8 | 1.74 | 0.19 | 0.11 | 0.06 | 0.03 | 0.01 |
| 3.4 | 0.69 | 0.07 | 0.04 | 0.02 | 0 | 0 |
| 5.1 | 0.14 | 0.03 | 0.01 | 0 | 0 | 0 |
| Commercial Instrument 1-mg/$cm^2$ 3.5-in.-diam Air Ionization Chamber (mR/hr) | | | | | | |
| 1.8 | 4.6 | 0.6 | 0.2 | 0.1 | 0 | 0 |
| 3.4 | 2.4 | 0.3 | 0.1 | 0 | 0 | 0 |
| 5.1 | 0.8 | 0.1 | 0 | 0 | 0 | 0 |

Since three of the detectors gave no response to the smallest source (0.0045 μCi) at a distance of 1.8 cm, an additional reading was made at the shortest possible source-to-detector-window distance for each of the

detectors except the ORNL detector having a 1.4-mg/cm$^2$ G-M tube. The 0.0045-μCi source is significant, because it closely corresponds to the USAEC value of 0.005 μCi as evidence of a leaking source. The results of these measurements are:

1. ORNL 1.4-mg/cm$^2$ G-M Tube and Scaler

   The source was readily detected at distances up to and including 5.1 cm (35 counts/min above background at 5.1 cm).

2. ORNL 2-mg/cm$^2$ G-M Tube Survey Meter

   The response of this detector at contact with the source was zero (0.31 cm).

3. Commerical Instrument 1.2-mg/cm$^2$ G-M Tube Survey Meter

   This instrument read 250 counts/min above background while in contact with the source (0.31 cm) and readily detected the source at contact.

4. U. S. Army Survey Meter (two instruments tested)

   This instrument detected the source at contact (0.62 cm). Readings were 0.02 and 0.04 mR/hr for the two instruments. This detector has the disadvantage of a very small movement of the dial indicator in this dose range, making it difficult to decide whether or not activity is actually present.

### b. Tests of Krypton-85 Luminous Light Sources

The radiation output through the light window of eight commercial krypton-85 self-luminous light sources is being measured with a number of radiation survey instruments. The response of these instruments to radiation at various distances from the source light window will be compared later with their response to known standards. The response of an ORNL cutie-pie detector (mR/hr) is given in Table 13 for the eight light sources.

Table 13. Response of a Cutie-Pie Detector to Radiation from Light Sources

| Distance (cm) | Cutie-Pie Reading (mR/hr) from 0.5-in.-diam Source | | | | Cutie-Pie Reading (mR/hr) from 0.23-in.-diam Source | | | |
|---|---|---|---|---|---|---|---|---|
| | 200 mCi | 28 mCi | 2 mCi | 1 mCi | 60 mCi | 14 mCi | 1 mCi | 0.3 mCi |
| 0 | 330 | 60 | 3 | 2 | 69 | 19 | 2 | 0 |
| 1 | 220 | 35 | 2 | 1 | 45 | 13 | 1 | 0 |
| 2 | 150 | 23 | 1 | 0 | 33 | 9 | 1 | 0 |
| 3 | 110 | 17 | 0 | 0 | 24 | 6 | 1 | 0 |
| 4 | 80 | 13 | 0 | 0 | 19 | 5 | 0 | 0 |

Table 13. Continued

| Distance (cm) | Cutie-Pie Reading (mR/hr) from 0.5-in.-diam Source | | | | Cutie-Pie Reading (mR/hr) from 0.23-in.-diam Source | | | |
|---|---|---|---|---|---|---|---|---|
| | 200 mCi | 28 mCi | 2 mCi | 1 mCi | 60 mCi | 14 mCi | 1 mCi | 0.3 mCi |
| 5 | 64 | 10 | 0 | 0 | 15 | 4 | 0 | 0 |
| 6 | 50 | 8 | 0 | 0 | 13 | 3 | 0 | 0 |
| 7 | 41 | 7 | 0 | 0 | 11 | - | 0 | 0 |
| 8 | 35 | 6 | 0 | 0 | 9 | 2 | 0 | 0 |
| 9 | 29 | 5 | 0 | 0 | 8 | - | 0 | 0 |
| 10 | 25 | 4 | 0 | 0 | 7 | 1 | 0 | 0 |
| 15 | 14 | 3 | 0 | 0 | 5 | 1 | 0 | 0 |
| 20 | 9 | 2 | 0 | 0 | 4 | 0 | 0 | 0 |
| 25 | 6 | 1 | 0 | 0 | 3 | 0 | 0 | 0 |

## TECHNOLOGY UTILIZATION - 08-01-05

### A. Information Center

There are now 19,800 accessions in the Isotopes Information Center, more than 10,000 being available for computer searching. In September, a total of 120 answers to queries were sent out, 61 of which were IIC-prepared documents, six were computer searches, and 53 were general information. Another ten requests were received from persons wishing to remain on distribution for the "Worldwide" bibliography, making a total of 90.

Four Sales letters were translated. A list of reviews in progress is shown on page 35.

### B. Isotopes and Radiation Technology

Permuted indexes for Isotopes and Radiation Technology Vols. 1-7 are now completed.

Writing and editing of Isotopes and Radiation Technology 8(3) and galley proofing of 8(2) were completed, and work on 8(4) manuscript was started.

### C. Publications

L. M. Makarochkina, A. K. Mikhailov, A. I. Gershenovich, D. I. Danilin, R. V. Dzhagatspanyan, and M. T. Filippov, Purification of Industrial Wastewaters with High-energy Radiation, Khim. Prom. 45: 905-09 (1969), ORNL-tr-2389, Martha Gerrard (translator).

| Title | Author(s) | Status, % Complete |
|---|---|---|
| Indium-113m: Preparation and Uses | Martha Gerrard | 10 |
| Flow Measurement | R. H. Lafferty, Jr. | 90 |
| Iodine-125 | P. S. Baker and Martha Gerrard | 25 |
| Isotopic Methods of Examination and Authentication in Art and Archaeology | F. J. Miller, E. V. Sayre, and B. Keisch | In reproduction |
| List of AEC Radioisotope Customers with Summary of Radioisotope Shipments, FY 1970 | Ruth Curl, compiler | 25 |
| Oceanography | Isotopes Information Center Staff | a |
| Patent Review - Process Radiation Development | R. E. Greene, P. S. Baker and Helen Warren | 99 |
| Potato Sprout Inhibition by Radiation | F. E. McKinney | 40 |
| Radiation vs Glass | D. N. Hess | 20 |
| Radioisotopes in the Pharmaceutical Industry | P. S. Baker and Martha Gerrard | 5 |
| Radioisotopes in the Steel Industry | Republic Steel Corporation | 20 |
| Radioisotopes in X-Ray Fluorescence Analysis | R. H. Lafferty, Jr. | 5 |
| Selected Abstracts of World Literature on Production and Industrial Uses of Radioisotopes (ORNL-IIC-30, Part 3) | Martha Gerrard and P. S. Baker | 30 |
| Self-Diffusion in Liquids | F. J. Miller | 75 |
| Strontium-90 | Roberta Shor, R. H. Lafferty, Jr., and P. S. Baker | 90 |
| Technetium-99m: Preparation and Uses | Martha Gerrard and P. S. Baker | 30 |
| Radioisotopes in the Textile Industry | F. J. Miller | 90 |
| Use of Radioisotopes in Sedimentology | V. Romanovsky, translated and edited by Martha Gerrard | 10 |
| Grain Disinfestation - A Worldwide Review | F. E. McKinney | 20 |
| Wood Plastics | R. E. Greene | 98 |
| Yttrium-90 | Martha Gerrard | 10 |
| Permuted Isotopes and Radiation Technology Indexes | Helen Raaen | 90 |
| Presowing Irradiation of Seeds | Machine translation of Russian book, edited by Martha Gerrard and P. S. Baker | 1st draft complete |

[a]Draft completed; being held at DID.

Robert Beraud, Istvan Berkes, Joannes Daniere, Michele Levy, Gilbert Marest, and Robert Rougny, Decay of $^{59}Fe$ and Excited Levels of $^{59}Co$, Compt. Rend. 265B: 1354-6 (1967), ORNL-tr-2338 (French), Martha Gerrard and J. J. Pinajian (translators).

Gerard Ardisson, Josette Dalmasso, and Christian Ythier, Observation of New High Energy Gammas of Iodine-132, Compt. Rend. 268B: 96-9 (1969), ORNL-tr-2263 (French), Martha Gerrard and J. J. Pinajian (translators).

# RADIOISOTOPE APPLICATIONS DEVELOPMENT

## BASIC TECHNOLOGY DEVELOPMENT - 08-03-01

### A. Analytical Application of Cerenkov Radiation

The objective of this project is to develop and evaluate new applications of Cerenkov radiation. Areas of study will be drawn from problems in fission-product analysis, environmental radioactivity, biomedical assay, and special Cerenkov counting systems.

The problem of environmental monitoring of radionuclides is usually complicated by the presence of many different nuclides. For a monitor application, chemical separation procedures must be avoided. We have initiated a study of the parameters that determine the Cerenkov response to mixtures of beta emitters and the application of pulse-height analysis techniques to isotope resolution. This work will also have important biomedical applications for dual-isotope experiments.

We have also looked at a number of special problems using Cerenkov techniques. Among these were radioisotope purity measurements and neutron flux monitoring by analysis of sulfur targets.

### B. Stability Tests for Components Used in Isotope Miniature Power System

Progress in this program has been reported to the customer who is awaiting results from other laboratories prior to requesting additional work at ORNL.

### C. Development of Phosphor Screens for Information Storage

Progress in this program has been reported to the customer who is awaiting results from other laboratoreis prior to requesting additional work at ORNL.

## SYSTEMS ENGINEERING APPLICATIONS - 08-03-02

### A. Oceanographic Systems Study

Radionuclides appear to be useful tools to study sand transport phenomena and, although many experiments have been conducted to demonstrate their effectiveness as tracers, little is known concerning whether or not the dynamic systems in which they are used can be tagged well enough to achieve quantitative data leading to an understanding of basic mechanisms. The Radioisotope Sand Tracing (RIST) study has progressed through equipment development to the point where important system tagging parameters can be studied.

Preparations for the October experiment at Point Mugu are progressing. The experiment will have a dual purpose:

1. to monitor transport of sand around the completed groin

2. to gather additional data to aid in measuring volume transport.

The research and development aspect of the experiment will center on the plug injections. Four plug injections will be placed seaward of the breaker zone. The behavior of the injections will be studied and an attempt will be made to correlate transport through the injections with transport from a line surface injection. If this correlation does exist, the overall problem of determining longshore transport will be greatly simplified because it will not be necessary to work directly in the breaker zone with plug injections.

The PDP-8/I computer and its associated hardware have been assembled and final software packages are being developed.

A series of four papers on the RIST program were presented at the Twelfth International Conference on Coastal Engineering recently held in Washington, D. C. Oak Ridge National Laboratory personnel presented two of these papers titled "A System for Tracing Radionuclide-Tagged Sand" and "Analysis of Radioisotopic Sand Tracer Study Data."

## RADIOISOTOPE SALES

An order was received from the U. S. Navy for 104,000 Ci of strontium-90 to be encapsulated into sources as requested by Aerojet Nuclear Systems Company. U. S. Navy advised that they also would be ordering an additional 450,000 Ci of strontium-90 to be encapsulated into sources. An order for 100,000 Ci of promethium-147 received from McDonnell Douglas Astronautics Company is to be shipped from Richland, Washington.

Shipments made during September include 192 Ci of xenon-133, 255 Ci of krypton-85, 5922 Ci of tritium, 6 mCi of argon-37, 259 Ci of tritium-helium mixture (20% tritium), 90 mg of samarium-151 as $SmO_2$, 187 Ci of promethium-147, and 100 Ci of strontium-90.

The radioisotope sales proceeds and shipments for the first two months of FY 1970 and FY 1971 are given in Table 14.

Table 14. Radioisotope Sales and Shipments

| Item | July thru August 1969 | July thru August 1970 |
|---|---|---|
| Inventory items | $ 99,747 | $ 49,799 |
| Major products | 24,948 | 19,895 |
| Radioisotope services | 48,030 | 34,010 |
| Cyclotron irradiations | 29,742 | 22,761 |
| Miscellaneous processed material | 21,270 | 6,432 |
| Packing and shipping | 12,480 | 13,405 |
| Total | $236,217 | $146,302 |
| Total Radioisotope Shipments | 416 | 512 |

## ADMINISTRATIVE SECTION

Travel by IDC personnel and visitors to the IDC are given in Tables 15 and 16, respectively.

Table 15. Travel of IDC Personnel

| Site Visited | Purpose of Visit |
|---|---|
| Chicago, Illinois | Present paper at 160th National American Chemical Society meeting |
| Washington, D. C. | Present paper at Twelfth International Conference of the Coastal Engineering Council |
| Nashville, Tennessee | Cooperative program with Vanderbilt University |
| Los Alamos, New Mexico | Discuss aerospace nuclear safety with AEC |

Table 16. Visitors to the IDC

| Visitors (affiliation) | Purpose of Visit |
|---|---|
| NSF Environmental Workshop State University of New York Buffalo, New York | Obtain information on IIC services |
| IAEA participants of Argentina, Brazil, Ecuador, Guatemala, India, Mexico, Pakistan, Peru, Philippines, Singapore, Republic of China, Thailand, Uruguay, and Vietnam | IAEA-sponsored tour of United States and Canada |
| DTIE-Oak Ridge | Tour IIC |
| DuPont, Wilmington, Delaware | Tour IIC |
| Vanderbilt University Hospital | Discuss xenon-133, gadolinium-153, and americium-241 |
| General Nuclear | Discuss strontium-90 bead sources and americium-241 |

## PUBLICATIONS

### REPORTS

A. F. Rupp, Radioisotope Program (8000) Progress Report for August 1970, ORNL-TM-3133, Oak Ridge National Laboratory.

J. H. Gillette, Isotope Program (5000) Progress Report for Quarter Ending June 30, 1970, ORNL-TM-3089, Oak Ridge National Laboratory.

Eugene Lamb, ORNL Isotopic Power Fuels Quarterly Report for Period Ending June 30, 1970, ORNL-4597, Oak Ridge National Laboratory.

Eugene Lamb, IPF Monthly Status Report for August 1970, ORNL CF-70-9-21, Oak Ridge National Laboratory.

### PAPERS PRESENTED AT SCIENTIFIC MEETINGS

L. C. Brown and J. K. Poggenburg, The Development of New Radionuclides for Medical and Biological Research, presented at the 160th National ACS Meeting, Chicago, Illinois, Sept. 13-18, 1970.

L. C. Brown, Large-Scale Cyclotron Production of Indium-111 for Medical Applications, presented at the 160th National ACS Meeting, Chicago, Illinois, Sept. 13-18, 1970.

L. C. Brown and J. K. Poggenburg, Radioisotope Production at the Oak Ridge National Laboratory, presented at the ORAU Medical Division Seminar, Oak Ridge, Tennessee, Sept. 29, 1970.

## TRANSLATIONS

V. I. Baranov and L. V. Gorbusina, Quantitative Determination of the Content of the Radioisotopes of Lead and Bismuth in Mine Atmosphere, Kernenergie 4: 154-55 (1961), ORNL-tr-2385, Lynda Kern (translator).

J. Blachot, J. Herment, and A. Moussa, A $^{188}$Re Generator Using $^{188}$W, Intern. J. Appl. Rad. Isotopes 20: 467-70 (1969), ORNL-tr-2293, J. J. Pinajian and Lynda Kern (translators).

Andree Capgras, Preparation of $^{198}$Au, Free of $^{199}$Au, Rpt. CEA-R-3239 (May 1967), ORNL-tr-2311, J. J. Pinajian and Lynda Kern (translators).

## INTERNAL DISTRIBUTION

1. A. L. Allen
2. M. A. Baker
3. P. S. Baker
4. E. E. Beauchamp
5. G. E. Boyd
6-8. T. A. Butler
9. F. N. Case
10. J. A. Cox
11. F. L. Culler
12. W. C. Davis
13. J. S. Drury
14. J. H. Gillette
15. H. R. Gwinn
16. R. F. Hibbs
17. K. E. Jamison
18. Lynda Kern
19. E. H. Kobisk
20. E. Lamb
21. R. E. Leuze
22. J. L. Liverman
23. L. O. Love
24. W. S. Lyon
25. R. E. McHenry
26. F. M. O'Hara
27. W. W. Parkinson
28. J. J. Pinajian
29. M. E. Ramsey
30. S. A. Reynolds
31-32. R. A. Robinson
33. D. A. Ross
34. A. F. Rupp
35. R. W. Schaich
36. A. H. Snell
37. K. A. Spainhour
38. M. R. Skidmore
39-40. H. F. Stringfield
41. A. M. Weinberg
42. J. C. White
43-44. Central Research Library
45. Document Reference Section
46-50. Laboratory Records Department
51. Laboratory Records - RC

## EXTERNAL DISTRIBUTION

52. G. A. Andrews, ORAU, Medical Division, Oak Ridge, Tennessee
53. Hal Atkins, Brookhaven National Laboratory, Upton, New York
54. D. S. Ballantine, AEC, Washington, D. C.
55-58. R. F. Barker, AEC, Washington, D. C.
59. N. F. Barr, AEC, Washington, D. C.
60. O. M. Bizzell, AEC, Washington, D. C.
61. C. R. Buchanan, AEC, Washington, D. C.
62. R. L. Butenhoff, AEC, Washington, D. C.
63. T. D. Chikalla, PNL, Richland, Washington
64. D. F. Cope, AEC Site Representative, ORNL
65. D. C. Davis, AEC, Oak Ridge, Tennessee
66. J. C. Dempsey, AEC, Washington, D. C.
67. W. K. Eister, AEC, Washington, D. C.
68. E. E. Fowler, AEC, Washington, D. C.
69. J. D. Goldstein, AEC, Washington, D. C.
70. A. Gottschalk, Argonne Cancer Research Hospital, Chicago, Illinois
71. F. D. Haines, AEC, Washington, D. C.
72-74. J. E. Hansen, PNL, Richland, Washington
75. J. W. Irvine, MIT (Consultant)
76. J. Lawrence, Lawrence Radiation Laboratory, Berkeley, California
77. J. E. Machurek, AEC, Washington, D. C.
78. J. N. Maddox, AEC, Washington, D. C.
79. J. C. Malaro, AEC, Washington, D. C.
80. W. E. Mott, AEC, Washington, D. C.
81. J. A. Powers, AEC, Washington, D. C.
82. G. J. Rotariu, AEC, Washington, D. C.

83. B. A. Ryan, AEC, Richland, Washington
84. W. D. Sandberg, AEC, Aiken, South Carolina
85. S. J. Seiken, AEC, Washington, D. C.
86. R. W. Shivers, AEC, Washington, D. C.
87. P. E. Smith, ARHCO, Richland, Washington
88. L. G. Stang, Jr., BNL, New York
89. G. Taplin, University of California, Los Angeles, California
90-95. D. H. Turno, SRL, Aiken, South Carolina
96. A. R. Van Dyken, AEC, Washington, D. C.
97. Laboratory and University Division
98-112. Division of Technical Information Extension