LOCKHEED MARTIN ENERGY RESEARCH LIBRARIES
3 4456 0514342 1

43

OAK RIDGE NATIONAL LABORATORY

operated by

UNION CARBIDE CORPORATION

for the

U. S. ATOMIC ENERGY COMMISSION

ORNL-TM-3111

CENTRAL RESEARCH LIBRARY
DOCUMENT COLLECTION

RADIOISOTOPE PROGRAM (8000) PROGRESS REPORT FOR JULY 1970

A. F. Rupp

OAK RIDGE NATIONAL LABORATORY
CENTRAL RESEARCH LIBRARY
DOCUMENT COLLECTION
LIBRARY LOAN COPY
DO NOT TRANSFER TO ANOTHER PERSON
If you wish someone else to see this document, send in name with document and the library will arrange a loan.
UCN-7969
(3 3-67)

NOTICE This document contains information of a preliminary nature and was prepared primarily for internal use at the Oak Ridge National Laboratory. It is subject to revision or correction and therefore does not represent a final report.

LEGAL NOTICE

This report was prepared as an account of Government sponsored work. Neither the United States, nor the Commission, nor any person acting on behalf of the Commission:

A. Makes any warranty or representation, expressed or implied, with respect to the accuracy, completeness, or usefulness of the information contained in this report, or that the use of any information, apparatus, method, or process disclosed in this report may not infringe privately owned rights; or

B. Assumes any liabilities with respect to the use of, or for damages resulting from the use of any information, apparatus, method, or process disclosed in this report.

As used in the above, "person acting on behalf of the Commission" includes any employee or contractor of the Commission, or employee of such contractor, to the extent that such employee or contractor of the Commission, or employee of such contractor prepares, disseminates, or provides access to, any information pursuant to his employment or contract with the Commission, or his employment with such contractor.

ORNL-TM-3111

Contract No. W-7405-eng-26

Isotopes Development Center

RADIOISOTOPE PROGRAM (8000) PROGRESS REPORT FOR JULY 1970

A. F. Rupp

Work Sponsored by
AEC Division of Isotopes Development

AUGUST 1970

OAK RIDGE NATIONAL LABORATORY
Oak Ridge, Tennessee
operated by
UNION CARBIDE CORPORATION
for the
U.S. ATOMIC ENERGY COMMISSION

LOCKHEED MARTIN ENERGY RESEARCH LIBRARIES

3 4456 0514342 1

CONTENTS

Page

RADIOISOTOPE PRODUCTION AND MATERIALS DEVELOPMENT 1

REACTOR-PRODUCED ISOTOPES 1

A. Biomedical Radioisotopes 1

1. Phosphorus-33 1
2. Potassium-43 1
3. Ruthenium-97 3
4. Barium-135m 3

B. Exploratory Development 3

C. Isotopic Power 3

1. Thulium-170 3

D. Reactor Products Pilot Production 5

E. Source Fabrication 6

1. Nickel-63 6
2. Miscellaneous Sources 6

F. Miscellaneous 6

1. HFIR Target Testing 6

ACCELERATOR PRODUCTS 7

A. Biomedical Radioisotopes 7

1. Rubidium-83 7
2. Indium-111 7
3. Gallium-67 9
4. Rubidium-84 9

B. Accelerator Pilot Production 9

FISSION PRODUCTS 10

A. Krypton-85 Enrichment 10

B. Stable Krypton Enrichment 11

C. Separation and Purification of Krypton-85 and Fission Xenon . 12

D. Cesium-137 Process and Product Study 12

Page

1. Cesium-137 Process Study 12
2. Cesium-137 Product Technology 17
3. Cesium Source Testing 17

E. Cesium-137 Pilot Production 18

1. Processing and Process Status 18
2. Operational Summary 18
3. Current Orders 18

F. Strontium-90 Pilot Production 19

1. Processing and Process Status 19
2. Operational Summary 19
3. Current Orders 19

G. Short-Lived Fission Products Pilot Production 19

H. Strontium-90 Silicate Sources 20

1. Matrix Studies 20
2. Encapsulation 20
3. Characterization 20

I. Strontium-90 Beta Sources 22

APPLICATIONS AND TECHNOLOGY SUPPORT 22

A. Low-Energy Gamma and Secondary X-Ray Sources 22

1. Determination of Thickness of Erbium Metal Coatings on Molybdenum 22

B. Radioisotope Characterization, Quality Control, and Standards 24

1. Radioisotope Characterization 24
2. Radioisotope Special Analysis and Quality Control 25

C. Radioisotope Safety 25

1. Special Form Prototype Testing 25
2. Surveillance of Regulations and Cask Evaluations 25
3. Source Leak Test Guide 25
4. Unsealed Source Testing 25

TECHNOLOGY UTILIZATION 30

A. Information Center 30

B. Isotopes and Radiation Technology 31

Page

RADIOISOTOPE APPLICATIONS DEVELOPMENT 32

BASIC TECHNOLOGY DEVELOPMENT 32

A. Liquid Scintillation Development 32

1. Cerenkov Counting 32

SYSTEMS ENGINEERING APPLICATIONS 32

A. Oceanographic Systems Study 32

RADIOISOTOPE SALES 33

GENERAL OPERATIONS 35

DECONTAMINATION AND MAINTENANCE 35

MISCELLANEOUS 35

ADMINISTRATIVE 36

RADIOISOTOPE PROGRAM (8000) PROGRESS REPORT FOR JULY 1970

A. F. Rupp

RADIOISOTOPE PRODUCTION AND MATERIALS DEVELOPMENT

REACTOR-PRODUCED ISOTOPES - 08-01-01

A. Biomedical Radioisotopes

1. Phosphorus-33

The purpose of this project is to develop methods of preparing hundred-millicurie quantities of carrier-free phosphorus-33 containing $\leq 5\%$ phosphorus-32. This radioisotope of phosphorus has a lower energy beta and a longer half-life than phosphorus-32, making it useful for autoradiography work in biochemistry, agriculture, and metallurgy.

Two methods of producing phosphorus-33 are being evaluated. One method is the irradiation of sulfur-33 enriched to greater than 92% sulfur-33 in a fast neutron flux to produce the radioisotope by the $^{33}S(n,p)^{33}P$ reaction. The other method is the fast neutron irradiation of chlorine-36 to produce phosphorus-33 by the $^{36}Cl(n,\alpha)^{33}P$ reaction. Highly enriched targets are necessary to reduce the phosphorus-32 content of the phosphorus-33 produced from either of the targets. The progress on each method of production is discussed below.

An evaluation was made of the two methods for preparing carrier-free phosphorus-33 in batch quantities of 500-1000 mCi by reviewing the yield data, product quality, availability of target material, and economic factors. The product yield and quality are similar for the $^{33}S(n,p)^{33}P$ and $^{36}Cl(n,\alpha)^{33}P$ methods and are not principal reasons for making a choice of one method over the other. It was decided to concentrate our attention on the $^{36}Cl(n,\alpha)^{33}P$ method now because of a more abundant supply of less costly enriched chlorine-36 target.

2. Potassium-43

The objectives of this project are: to prepare potassium-43 by the $^{43}Ca(n,p)^{43}K$ reaction, using isotopically enriched ^{43}CaO targets, in quantities sufficient for medical and biological experiments; to define a method for separating potassium-43 from the target in a purity suitable for medical use; and to establish cooperative programs with medical institutions interested in evaluating its usefulness.

Potassium-42 has been used, primarily in animals, to locate tumors, to tag red blood cells, and to study blood flow, but it has very limited use in humans because of its high beta energy (3.53 MeV), its high-energy (1.52 MeV) gamma ray, and its relatively short half-life (12.4 hr). Potassium-43, with a half-life of 22.4 hr and gamma-ray emissions of

0.373 and 0.617 MeV, is more suitable for metabolic and clinical studies, because the lower dose rate would permit multiple doses. It has been suggested as a possible tool for studying blood flow through the heart and for diagnosing myocardial infarctions or immune rejection of transplanted organs. It has also proved capable of diffusing through a kidney with greatly reduced renal function, providing a good image of this organ.

Two targets totaling 178 mg of enriched (approximately 63%) ^{43}CaO were irradiated simultaneously for 65 hr to test the function of the ion-exchange procedure under conditions of increased calcium target loading. The ion-exchange separation was identical to the procedure described earlier,[1] and the product amounted to 16.8 mCi at time of shipment. Shipments were made to Johns Hopkins, University of Mississippi Medical Center, and University Hospitals of Cleveland under our cooperative programs.

The separation column behaved similarly to those with lesser loading with the potassium-43 eluting in 160-175 ml (52-56 column volumes). The sodium-24 was found in the 50-ml fraction eluted from 100-150 ml and was completely separated from the potassium-43. Analysis of a sample of the dissolver solution indicated that the potassium-43 content was 21.8 mCi. A check was made later to find why the product contained only 16.8 mCi; it was found that the 5-ml fraction at 170-175 ml contained 4.2 mCi and that there was an additional 0.9 mCi in the fraction 155-160 ml. An in-cell gamma probe is used to determine which fractions are combined to form the product and an unusually high background due to activity in an adjacent cell caused these fractions to be overlooked. The product fractions are taken completely to dryness in a beaker and the beaker is observed for absence of visible mass which would indicate malfunction of the column. The product solution is then made up by pouring the desired volume of sterile saline solution in the beaker, swirling briefly, and then transferring to a Millipore syringe without further rinsing. In attempting to find the missing potassium-43, the beaker was checked and found to retain less than 0.1 mCi. Adding the activity of the two missed fractions to the product activity gives a total of 21.9 mCi which agrees well with the dissolver sample.

The potassium-43 has been shown to make possible visualization of the myocardium, with the ability to delineate the inferior wall, an accomplishment difficult by other techniques. Visualization of infarcts has been accomplished and Johns Hopkins is attempting to develop a clinical procedure for its use. This work was reported in July at the National Meeting of the Society of Nuclear Medicine.[2]

Future work will be done to increase the size of individual targets and to eliminate use of platinum crucibles in the recovery which is the source of the platinum and iridium contaminants in the targets.

---

[1] A. F. Rupp, Radioisotope Program (8000) Progress Report for April 1970, ORNL-TM-2993, Oak Ridge National Laboratory.

[2] M. Cooper, P. Hurley, K. Poggenburg, R. Reba, and Henry N. Wagner, Jr., ^{43}K as a Myocardial Scanning Agent, J. Nucl. Med. 11(6): 310 (1970), (abstract).

3. Ruthenium-97

Nothing to report.

4. Barium-135m

Barium radioisotopes have been used as bone-scanning agents. Due to the high toxicity of barium, the radioisotope must have a high specific activity. Barium-135m (28.7 hr) has a single prominent gamma ray of suitable energy (268 keV) for scanning.[3] It can be produced at specific activities of 30-35 mCi/mg of barium using enriched barium-134 targets irradiated three days at 2 x 10^{15} n/cm^2.sec.

Shipments of barium-135m were made to Johns Hopkins and Upstate Medical Center State University of New York in April and June. The target form is ^{134}BaO made by decomposing $^{134}Ba(NO_3)_2$ in a quartz ampule and sealing. The target is irradiated and dissolved in HCl and shipped with no further separation. The activities observed at the end of a 3-day irradiation of enriched (84%) barium-134 at approximately 2 x 10^{15} n/cm^2.sec were:

Nuclide	Half-life	Specific Activity	Nuclide	Half-life	Specific Activity
^{135m}Ba	28.7 hr	21.7 mCi/mg	^{140}La	40.2 hr	20 μCi/mg
^{139}Ba	83 min	12.3 mCi/mg	^{87m}Sr	2.83 hr	54 μCi/mg
^{133m}Ba	38.9 hr	80.4 μCi/mg	^{24}Na	15 hr	5.3 μCi/mg
^{131}Ba	11.7 days	76.1 μCi/mg			

B. Exploratory Development

Nothing to report.

C. Isotopic Power

1. Thulium-170

The objectives of this research are to provide sufficient data on thulium-170, which has been proposed as an isotopic power source for short-duration missions, to permit reasonable assessment of its potential application, and to permit preliminary engineering design of power sources. The economics for reactor production of thulium-170 (128.5 day; E_{β^-} = 0.32 MeV) from natural thulium-169 are favorable and the sesquioxide offers a promising fuel compound, having a practical specific power of approximately 2 W/g and a power density of approximately 16 W/cm^3. The study will include measurements of thermal conductivity and thermal diffusivity, leach rates for safety analysis, high-temperature compatibility with suitable containment metals, vapor pressure, and fuel form densification.

---

[3] F. Hosain, I. B. Syed, H. N. Wagner, and R. E. Lewis, Ionic ^{135m}Ba for Bone Scanning, J. Nucl. Med. 11(6): 328 (1970), (abstract).

Opening of all irradiation cans containing the $^{170}Tm_2O_3$ has been completed. The condition of the pellets is very poor. In general, the sintered wafers made by the Savannah River Laboratory technique appear best. The Sanders Nuclear Corporation (SNC) proprietary process shows severe laminar cracking and distortion. The ORNL vacuum hot-pressed wafers show severe cracking also. Figure 1 is a picture of the slug containing the SNC wafers just after opening. The opposing faces of the aluminum D-bars from the same slug show thermal etching of the aluminum in contact with the wafers. Evidence that cracks occurred during the irradiation can be seen in the images. Figure 2 shows the laminar fracturing of the SNC proprietary wafers. All the SNC proprietary wafers were fractured. Figure 3 shows details of a few of the wafers made by the SRL technique by SNC. A few of these were intact. Some evidence of laminar cracking can be seen here also. Vacuum hot-pressed wafers produced at ORNL have multiple cracks and tend to form fines. None of the larger fragments were particularly fragile in handling.

X rays were taken after the wafers were canned which show that they were not cracked before insertion into the reactor. The nature and appearance of the fractures point strongly towards breakage due to thermal shock. The estimated power density of the wafers is 3 W/g. For an assumed 2-mil gap between wafer and aluminum, the calculated center line temperature of the wafers is 1230°C with a surface temperature of 700°C. The aluminum is estimated to be at 230°C opposite the wafers. The temperature is estimated to drop to less than 100°C within 15 sec after reactor shutdown. The first 3 sec of this interval results in a drop of 600°C. This process was repeated for several shutdowns during the irradiation.

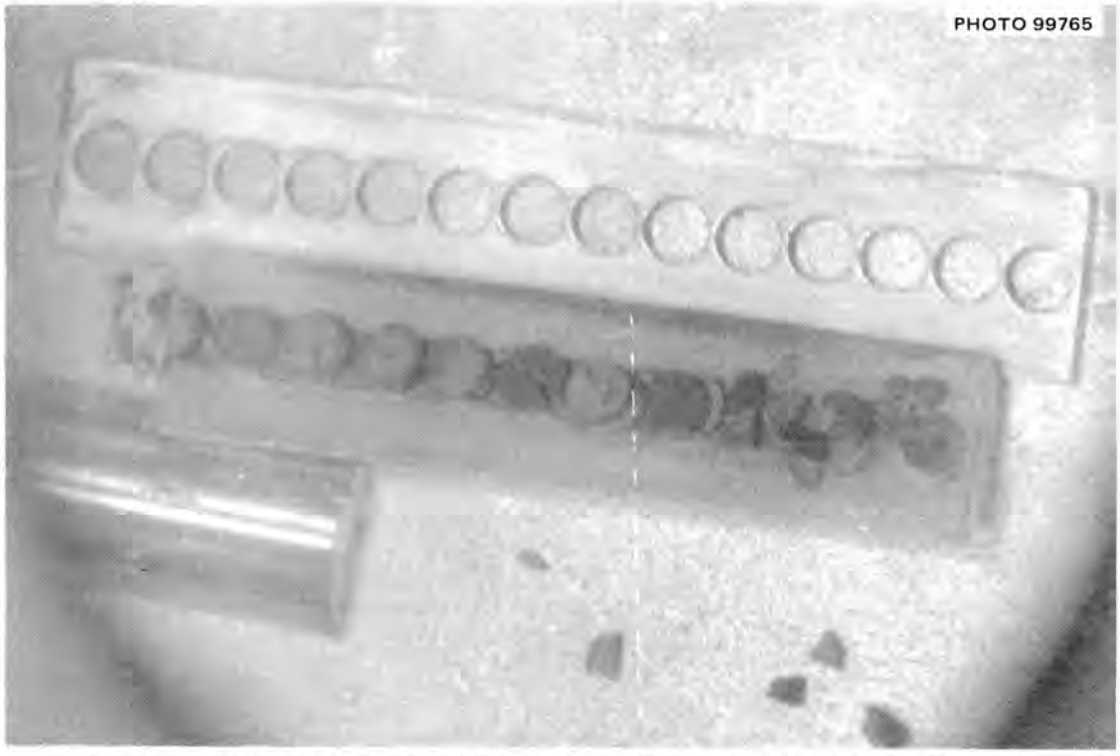

Fig. 1. Slug Containing SNC Wafers Immediately After Opening.

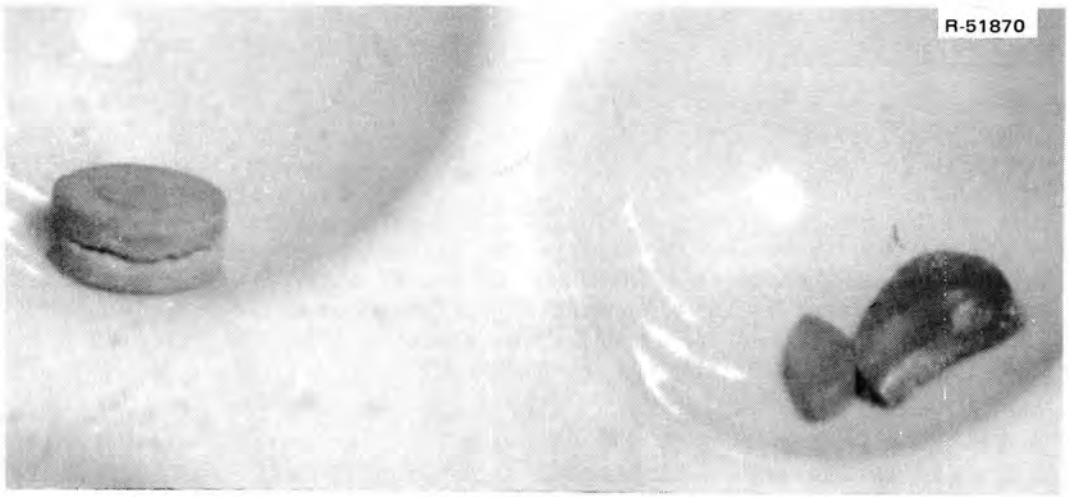

Fig. 2. Laminar Fracturing of SNC Proprietary Wafers.

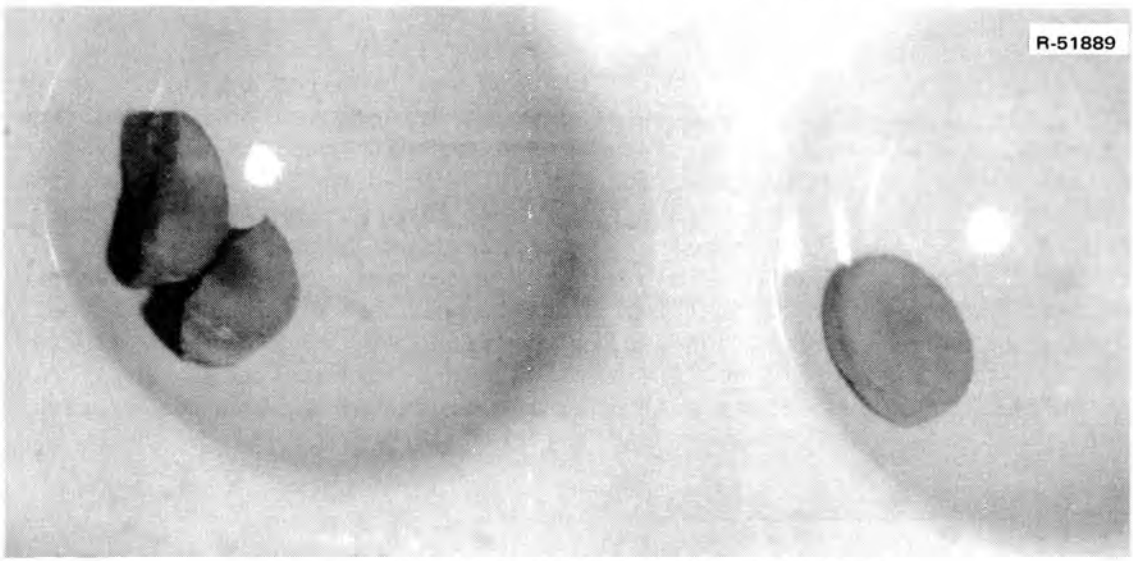

Fig. 3. SNC Wafer Made by SRL Technique.

Samples of the different wafers will be examined metallographically and an effort will be made to salvage some wafers for compatibility specimens.

D. Reactor Products Pilot Production (Production and Inventory Accounts)

Processed Units		Service Irradiations	
Radioisotope	Total (mCi)	Type	Number
Calcium-47	11	Platinum-196	3
Antimony-122	1800	U_3O_8	1
Copper-67	10	Antimony-124	1
		Y_2O_3	1
		Vanadium	1
		Molybdenum	1
Total	1821		8

E. Source Fabrication

1. Nickel-63

Laboratory techniques are being developed to provide a nickel-63 sample that can be incorporated in stainless steel welding rod. The purpose of the project is to develop a means for assessing defects in welds made on capsules containing chemical munitions using a radioactive tracer. This work is being carried out by the Metals and Ceramics Division under contract to the Edgewood Arsenal. It is anticipated that other isotopes in addition to nickel-63 will be used.

One sample has been prepared and delivered to the Metals and Ceramics Division for evaluation. Successful incorporation of 20 mCi of nickel-63 in a stainless steel alloy which will be formed into welding rod was achieved, and requests for additional samples have been made.

The sample was prepared by electrolytically plating nickel-63 from a saturated ammonium oxalate bath. The bath was prepared by carefully evaporating the nickel-63 stock solution down to dryness and then dissolving the resulting solids in 5 ml of saturated ammonium oxalate solution. The nickel-63 was plated on 12 in. of 0.025-in.-diam 308 stainless steel wire using a current flow of 0.1 Amp for 45 min. This sample was then reduced for 2 hr with hydrogen gas at approximately 900°C. A uniform distribution of the isotope in stainless steel was achieved by the Metals and Ceramics personnel by melting short lengths of 308 stainless steel welding rod in a crucible containing the nickel-63 coated wire. It is possible that an improvement in handling can be accomplished by covering the initial nickel-63 plate with inactive nickel in a separate plating step.

2. Miscellaneous Sources

One cobalt-60 source containing 6,206 Ci was fabricated for Atomic Energy of Canada Ltd. for Puerto Rico Nuclear Center. One hundred fifty-five 10-μCi sources of scandium-46 were fabricated and shipped.

F. Miscellaneous

1. HFIR Target Testing

Two hydraulic tube rabbits were tested in July, and one unit was returned to the experimenter because of a leak in the weld.

ACCELERATOR PRODUCTS - 08-01-02

A. Biomedical Radioisotopes

1. Rubidium-83

The chief objectives of this work are twofold in nature: (1) to elucidate, define, and optimize pertinent production parameters for preparing a high purity product acceptable for human use and (2) to make sufficient material available to cooperative participants on an "excess material" basis for their medical and research applications and evaluation. Rubidium-83 is prepared by cyclotron bombardment of strontium-84 by the following reactions:

$$^{84}Sr(p,2n)^{83}Y \xrightarrow{EC,\ \beta^+} {}^{83}Sr \xrightarrow{EC,\ \beta^+} {}^{83}Rb\ ,$$

$$^{84}Sr(p,pn)^{83}Sr \xrightarrow{EC,\ \beta^+} {}^{83}Rb\ ,$$

$$^{84}Sr(p,2p)^{83}Rb\ .$$

Rubidium-83 has a half-life of 83 days and principal gamma emissions of 0.521 (100%), 0.530 (66%), and 0.553 (36% MeV).

A request was received from our cooperative participant at the University of Utah for rubidium-83 to be used in muscular dystrophy studies. A 178-mg sample of 75.6% isotopically enriched $^{84}SrCO_3$ was irradiated in the ORNL 86-Inch Cyclotron and has been set aside to allow decay of the strontium-83 to rubidium-83 before processing. The actual processing and analysis of this development run will be performed and reported in August.

In order to justify the participation of the Isotopes Development Center in such cooperative programs, both objectives must be met. The data obtained to date on the development of rubidium-83 would seem sufficient to meet our first goal of defining and optimizing the production technology of this radionuclide from a strontium-84 target. As a result it is felt that the distribution of this radionuclide on an "excess material" basis will have to be terminated in the near future. In order to avoid disrupting the research of our cooperative participant by discontinuing distribution without adequate notice, we will make this last shipment on an "excess material" basis as part of our cooperative program. If additional material is required after this final "excess material" shipment, it can be supplied as a special experimental product.

2. Indium-111

The objectives of this program are twofold: (1) to elucidate, define and optimize pertinent production parameters (cyclotron target material, cyclotron beam energy and current conditions, adverse side reactions leading to undesirable isotopic impurities, target processing and product purification procedures, and target recovery, if necessary) and (2) to make sufficient material available to cooperative participants for their evaluation of indium-111 as a diagnostic radionuclide in

medicine. Such applications would include spinal-cerebral cisternography, aerosol lung studies, delayed brain scanning, visualization of the lymphatic system, metabolic studies of indium-labeled macroaggregates and colloids, and possible applications for tumor localizations. Indium-111 has both a favorable decay scheme [gamma emissions of 173 keV (89%) and 247 keV (94%)] ideally suited for external detection and an optimal half-life (2.81 days) for labeling and distribution studies which must be carried out over 24 hr or longer. The use of indium in such lengthy studies is currently impossible with the indium-113m (1.73 hr) isotope now in general use.

Additional operating experience on the HBr-isopropyl ether extraction process for indium-111 purification was obtained this month. Only one indium-111 development run was made with a total of approximately 120 mCi being supplied to medical cooperative participants for their application and evaluation. The total indium-111 production and distribution for the last half of FY 1970 is shown in Table 1.

Table 1. Experimental Indium-111 Preparations Made During the Last Two Quarters of FY 1970

Month	Number of Process Runs	Number of Shipments	Amount[a] of ^{111}In Shipped (mCi)
January	2	8	189
February	—	—	—
March	3	9	289
April	2	5	189
May	2	6	198
June	2	10	226
Total	11	38	1091

[a]Data calculated as of 8:00 AM on the day following shipment to be consistent with the ORNL decay allowance policy.

A decision is currently being awaited from the USAEC on an Isotopes Division's petition to process and sell this radionuclide as an experimental product for development and evaluation. Considerable interest was aroused in this radionuclide by the four papers presented by our cooperative participants at the 17th Annual Meeting of the Society of Nuclear Medicine, July 6-12, 1970, Washington, D. C. Numerous requests have been received from clinicians and researchers in nuclear medicine for information regarding the availability and purchase of this product.

3. Gallium-67

The objectives of this program are to determine the optimal target configuration for gallium-67 (78 hr) production in acceptable purity and quantity and to provide gallium-67 for clinical applications research and development. Interest in this isotope has been spurred by evidence, obtained by the Medical Division of Oak Ridge Associated Universities (ORAU), of a high uptake of carrier-free gallium-67 by lymphoid tumors in both animals and humans. This interesting discovery was made during the evaluation of gallium-67 as a bone-scanning agent for a patient with Hodgkin's disease and has since been successfully extended to a clinical study of several types of malignant neoplasms. Additional animal studies have been performed by the ORAU group indicating that it is the viable rather than necrotic tumor cells in mice and rats that are mainly responsible for uptake of gallium-67. Autoradiographic studies of rat tumors indicate it is chiefly located in tumor cytoplasm. Their results suggest that gallium-67, with its remarkable ability to concentrate in living malignant cells, may be useful for both clinical diagnosis and in studies of the nature of malignant change.

Gallium-67 decays by electron capture with the emission of four main gamma rays of 93, 184, 296, and 388 keV with intensities of 40, 23, 20, and 8%, respectively. Carrier-free gallium-67 is produced by the $^{68}Zn(p,2n)^{67}Ga$ reaction by bombarding natural, high purity zinc tubing targets (0.375-in. OD by 0.020-in. wall thickness) with 22-MeV protons in the ORNL 86-Inch Cyclotron. Irradiation of natural zinc also produces appreciable amounts of gallium-66 (9.5 hr) that must be allowed to decay before human use.

Only one gallium-67 preparation was sent to ORAU during this period, and two smaller orders were filled for clinicians interested in the application of this radionuclide in their studies. This reduced production schedule reflects the widespread attendance within the nuclear medical community of the 17th Annual Meeting of the Society of Nuclear Medicine. Production has now returned to the routine every-other-week basis employed during FY 1970.

4. Rubidium-84

Nothing to report.

B. Accelerator Pilot Production (Production and Inventory Accounts)

Table 2 gives the July 1970 cyclotron irradiations and runs for ORNL and non-ORNL customers.

Table 2. Cyclotron Irradiations and Runs for July 1970

Product	No. of Runs	Time (hr:min) Beam	Misc.	Total	Total Charges
ORNL Research Programs					
Cobalt-61	Stock	2:32	0:25	2:57	$ 392.36
Cobalt-61	1	1:30	1:15	2:45	271.25
Cesium-129	1	2:00	1:00	3:00	297.87
Gallium-67	1	2:20	1:15	3:35	306.35
Indium-111	1	2:00	1:15	3:15	340.15
Promethium-148	1	7:30	1:00	8:30	820.37
Rubidium-83	1	2:00	1:15	3:15	321.62
Total		19:52	7:25	27:17	$ 2,749.97
Non-ORNL Research Programs					
Cobalt-56	1	2:00	1:15	3:15	$ 646.40[a]
Germanium-68	1	8:00	1:15	9:15	1,532.59[a]
Radiation Damage	1	25:55	10:30	36:25	5,123.33
Rhodium-99	1	4:00	1:15	5:15	820.10
Yttrium-87	2	4:15	2:30	6:45	1,115.20
Yttrium-88	1	8:00	1:15	9:15	1,380.25
Total		52:10	18:00	70:10	$10,617.87

[a]Purchased but not shipped.

FISSION PRODUCTS - 08-01-03

A. Krypton-85 Enrichment

Unit CD (see Fig. 4) was found to have a stripped gear in the bellows pump drive system. This was repaired by replacing the motor and gear reducer assembly, with no down time on the system. Unit C developed a leak in the bellows pump. This was repaired by replacing the bellows pump assembly. There was no loss of product, and the pump change was completed in one day.

The depleted ends were transferred to storage, the krypton-85 peak was centered, and the ends were replaced with normal feed in units AB, B, and C. The present status of the six cascades is shown in Table 3. The count rates indicate the relative levels of enrichment.

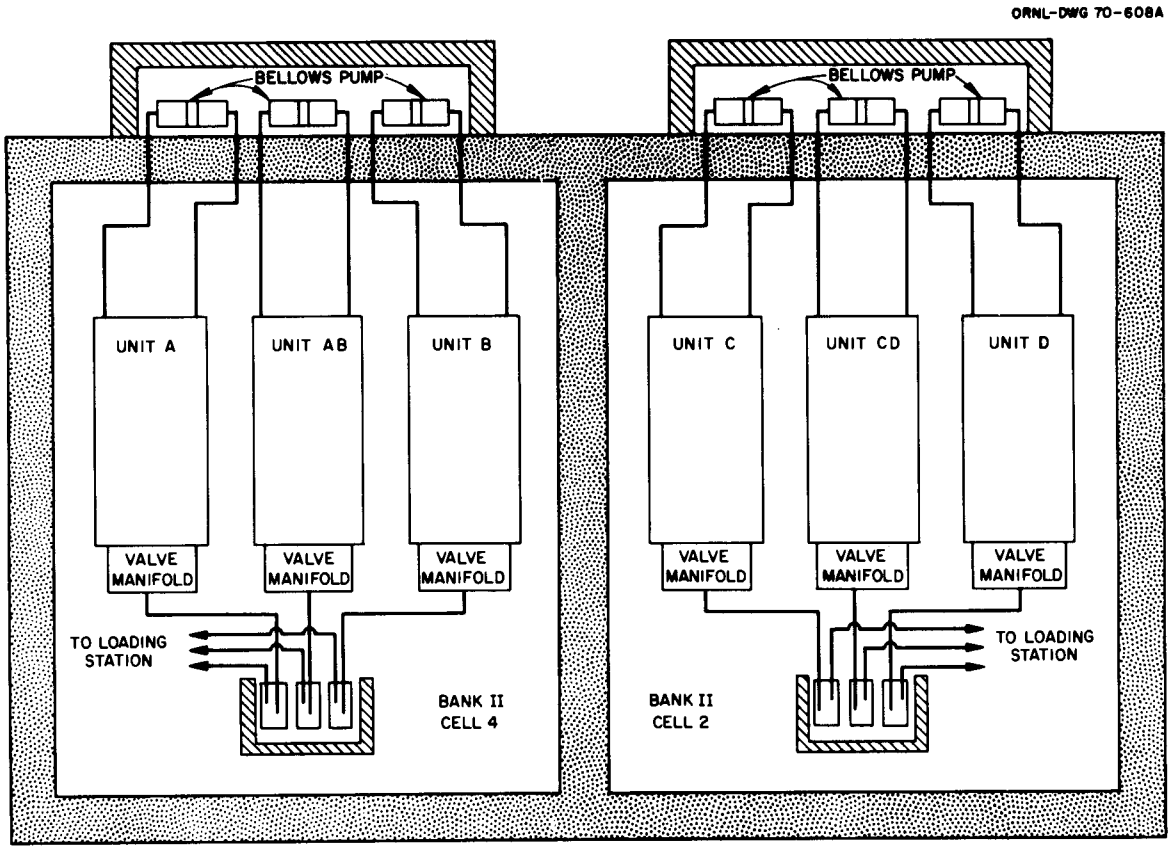

Fig. 4. Schematic Arrangement of Krypton-85 Columns.

Table 3. Thermal Diffusion Columns — Operational Status

Unit	Activity in Unit (Ci)	Time Since Last Product Removal (days)	Count Rate in Product Section (counts/min) July 1970	June 1970
A	Stable	74	—	—
AB	1454	123	12,200	7,700
B	1333	123	9,800	6,550
C	1436	213	6,350	5,950
CD	1757	123	7,250	7,900
D	1263	161	9,100	8,900

B. Stable Krypton Enrichment

Four batches of stable krypton for use as cyclotron target material were withdrawn from column A in the following amounts and assays:

Volume (liters)	Krypton-83 (%)	Krypton-84 (%)	Krypton-85 (%)
1.31	13.1	81.7	3.9
1.01	5.04	92.94	1.66
0.813	3.39	92.41	4.09
0.735	2.28	85.42	12.22

Preparations are in progress to reload column A with xenon to enrich stable xenon-134.

C. Separation and Purification of Krypton-85 and Fission Xenon

A krypton-85-xenon fractionation on our cryogenic charcoal columns was made to separate krypton-85 from fission-product gas received from Idaho Falls. Approximately 8000 Ci of krypton was recovered during this run and placed in inventory. A second cylinder of feed gas containing approximately 5000 Ci of krypton-85 remains to be processed.

Fission-product xenon was separated and recovered from the krypton/xenon gas mixture. The xenon was processed through a second stage to reduce the krypton-85 content to less than 10 μCi/liter of xenon; however, because of the residual krypton-85 in our purification equipment, the krypton-85 content was reduced to only 100 μCi/liter. A special cleanup of the equipment will be required before another attempt is made to achieve the less than 10 μCi of krypton-85 per liter of xenon product to meet PNL specifications. This will be done following the processing of krypton-85.

A special batch of fission-product gas from Idaho that contains principally stable fission-product xenon will be used for preparation of high purity fission-product xenon for PNL. Shipment is delayed until shipping containers that now contain krypton-85 feed can be processed and returned to Idaho.

D. Cesium-137 Process and Product Study

1. Cesium-137 Process Study

The purpose of this task is the study and development of economical processes for recovery, purification, and conversion of cesium-137.

The manuscript of a report entitled "Modified ^{137}CsCl Process for FPDL — Preliminary Study" was completed. This report has been prepared to outline suggested methods of approach to the elution and conversion of the high purity cesium-137 feed material (approximately 98 wt % Cs cation) loaded on an ion-exchanger shipping cask that is to arrive from ARHCO in the near future. The highlights of the report are presented below.

a. Potential Eluants and Reactions Involved in Overall Process

Three different eluants considered were NH_4Cl (or NH_4Cl-NH_4OH), $(NH_4)_2CO_3$-NH_4OH, and $(NH_4)_2SO_4$. To evaluate desirability of the eluant and the process, probable reactions taking place at various process steps have been postulated, and feasibility of the reactions examined based on thermodynamic calculations. In all cases, $^{137}CsCl$ was considered to be the final product.

b. Properties of Eluants and Intermediate Compounds

Studies have been made of important properties of the eluants and intermediate compounds to characterize the individual processes. The properties investigated include (1) thermal stability, (2) solubility in water and hydrogen ion concentration, (3) elution efficiency, and (4) corrosion behavior.

The cesium elution characteristics of the Zeolite ion exchanger (e.g., AW-500) are expected to be influenced primarily by the NH_4 ion concentration which, in turn, is governed by the solubility of the eluant salt. The elution efficiency is favored by the high NH_4 ion concentration in the case using the $(NH_4)_2CO_3$-NH_4OH eluant. If this trend should hold true among the eluants of different ammonium salts, the $(NH_4)_2CO_3$ solution would be considerably more efficient than either NH_4Cl or $(NH_4)_2SO_4$. This assumption is based on the fact that the NH_4 ion concentration of the $(NH_4)_2CO_3$ solution is twice as high as the other two salts at saturation.

According to the corrosion data from the literature, the extent of attack on the stainless steel 316 in the concentration and temperature (25-100°C) ranges of interest is approximately the same for all three eluants (less than 0.02 in./year). The rate of corrosion of such magnitude is considered satisfactory for the ordinary industrial applications. The corrosion resistance of stainless steel 316 toward other compounds involved in various process steps appears to be equal to or better than that toward the eluant solutions. An exception is wet or aqueous HCl which is known to attack stainless steel 316 quite severely. This problem can be overcome by the use of tantalum, special alloys, or plastic-lined vessels.

c. Conceptual Process Flow Sheet

Figures 5-7 show the conceptual cesium-137 recovery process flow sheets using three different eluants. Although major process steps are represented by separate units of equipment, some of these steps may be carried out in single-process equipment. Such arrangement is especially desirable from the economics standpoint for a small-scale production.

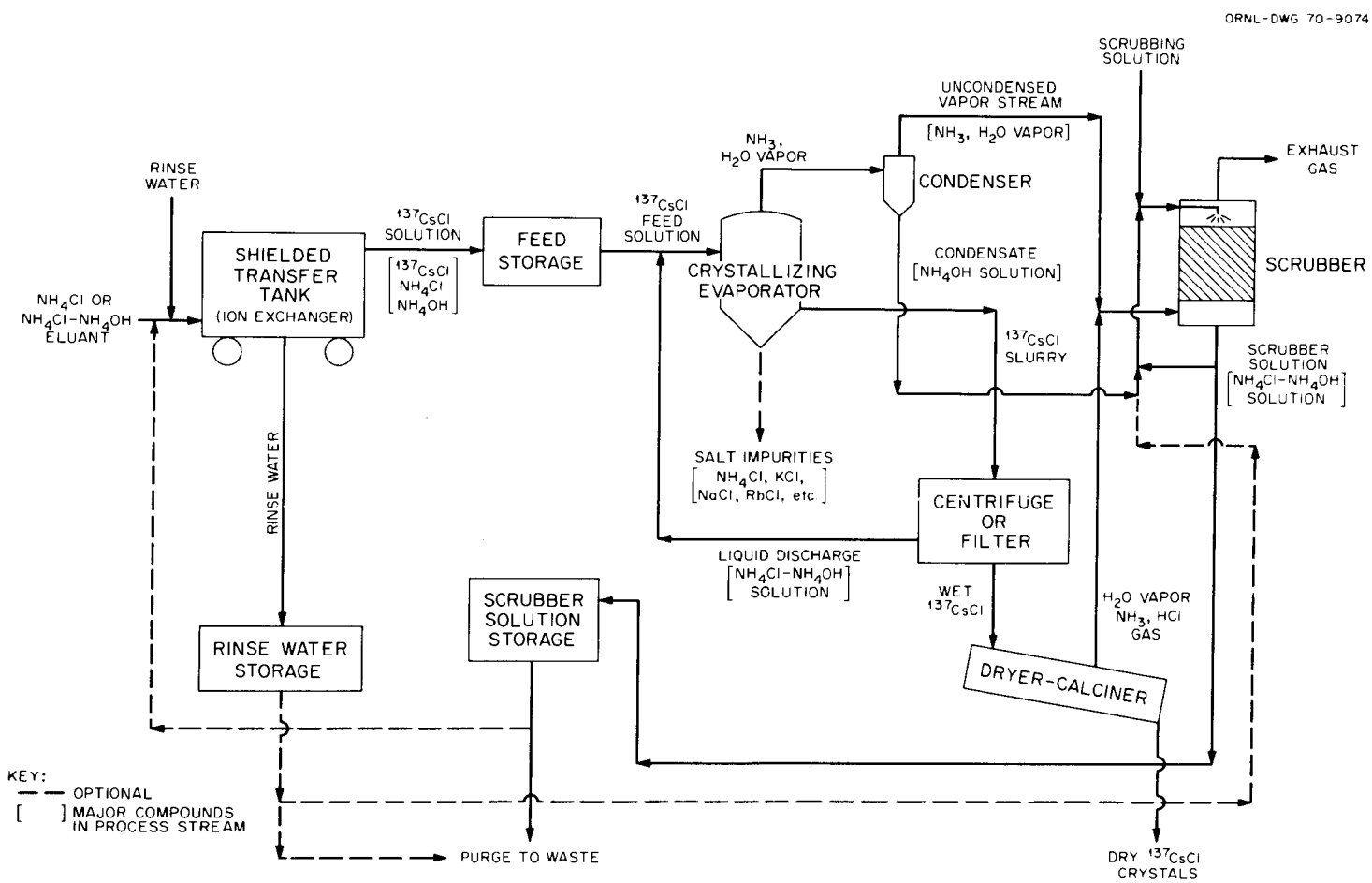

Fig. 5. Conceptual Cesium-137 Recovery Process Flow Sheet Using NH_4Cl or NH_4Cl-NH_4OH as Eluant.

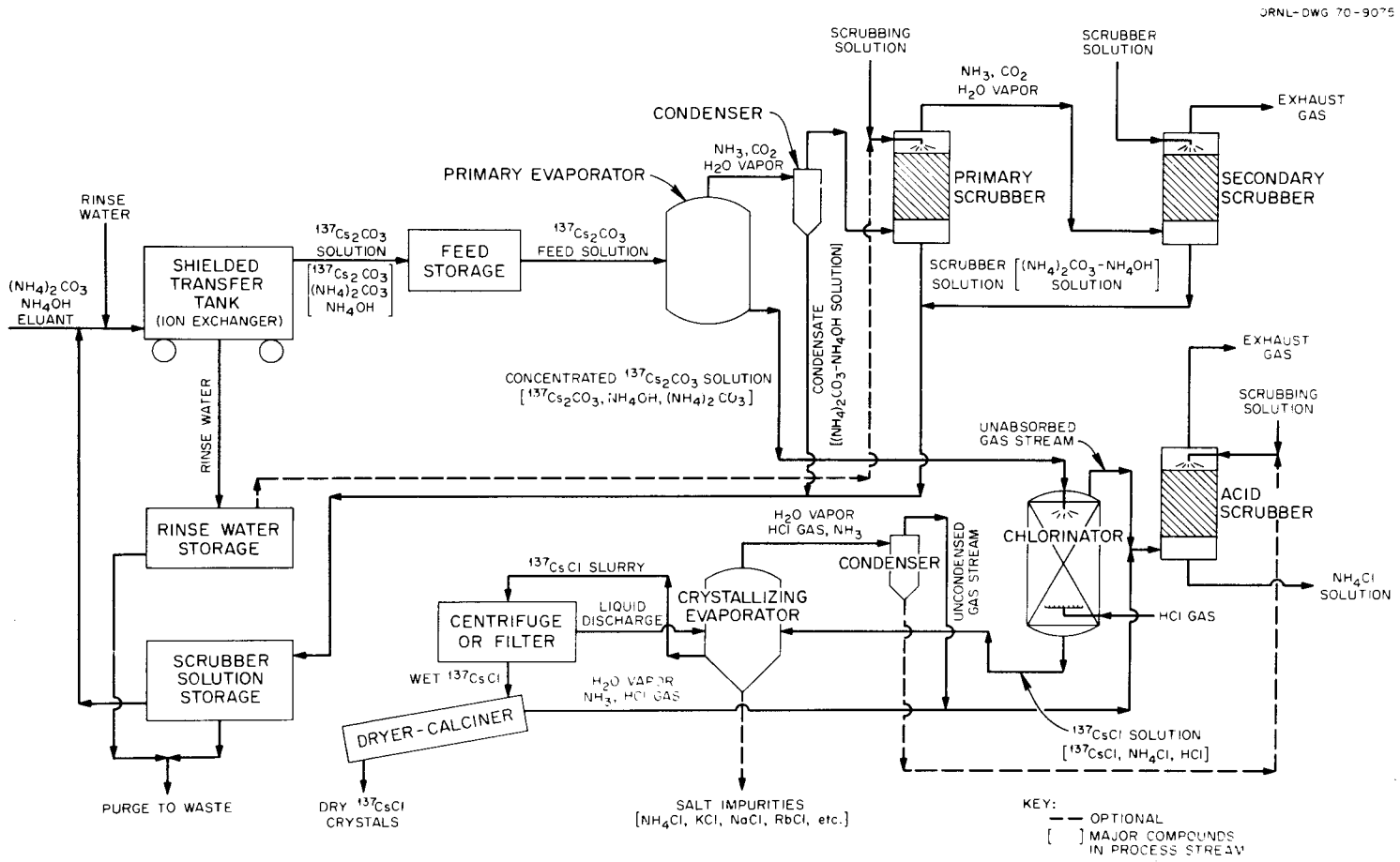

Fig. 6. Conceptual Cesium-137 Recovery Process Flow Sheet $(NH_4)_2CO_3$-NH_4OH as Eluant.

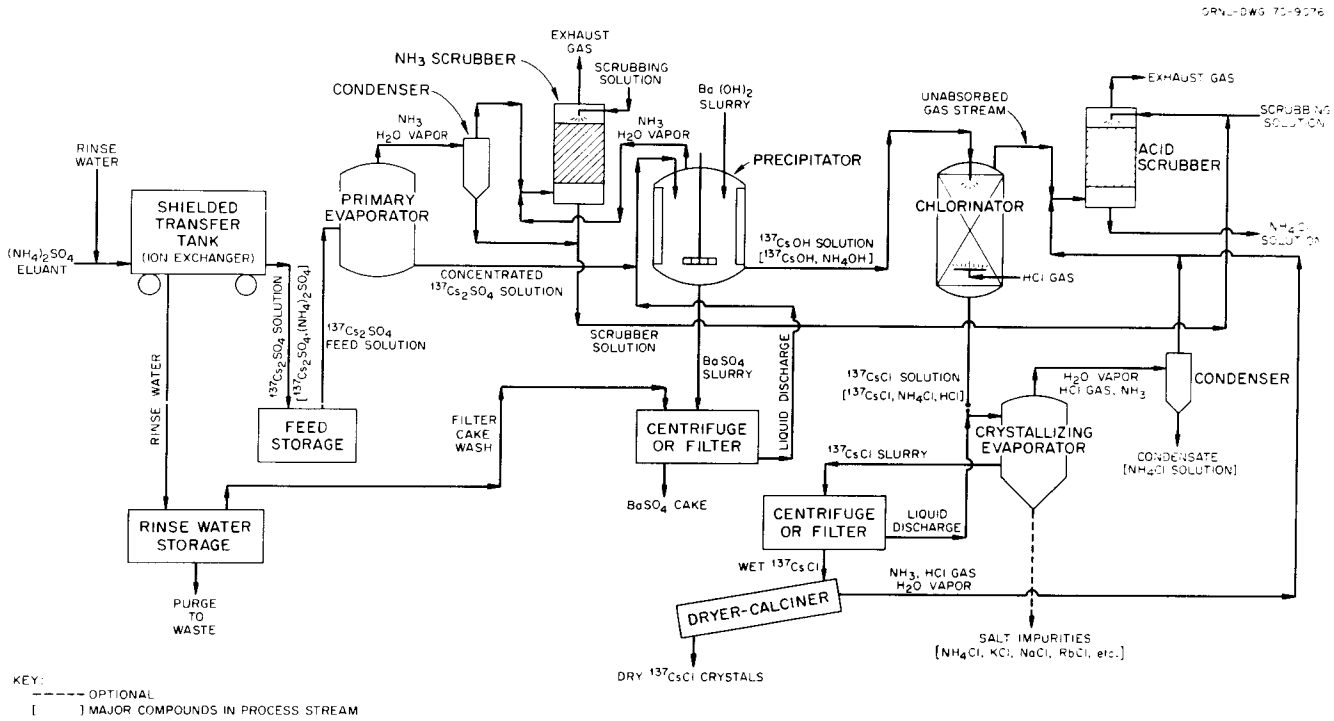

Fig. 7. Conceptual Cesium-137 Recovery Process Flow Sheet Using $(NH_4)_2SO_4$ as Eluant.

d. Conclusion and Recommendation

The report concluded with the listing of major problems that should be investigated to confirm technical feasibility of the three processes suggested. A recommendation was made that a bench-scale experimental program be initiated to first study the problems associated with the NH_4Cl process.

In the cesium-137 process study, the emphasis on the development of commercial-scale processes will be resumed.

2. Cesium-137 Product Technology

The purpose of this task is to develop and improve cesium-137 source forms and to characterize the source forms for operational and safety requirements.

The objective of the current study is to find a means of eliminating the solid-solid phase transition which occurs at 469°C with an accompanying volume increase.

A high-temperature X-ray diffraction study has been made using a 2 mole % KCl-CsCl mixture to obtain structural data to help explain the complex behavior of the mixture demonstrated on the differential thermal analysis (DTA) thermogram. The preliminary result indicates that the disappearance of the solid-phase transition peak (approximately 460°C) after the initial melting-cooling cycle probably does not represent the absence of the change in the crystal structure. This statement is based on the diffraction patterns which show a high-temperature structure of CsCl at 500°C while a mixed structure (approximately 50% each of the high- and the low-temperature structures) appears on cooling to approximately 390°C. The diffraction patterns were obtained after temperatures of the mixture were maintained at 500 and 390°C for approximately 24 hr. When the mixture was cooled to room temperature, an appreciable portion of the high-temperature structure remained.

An attempt has been made to obtain the X-ray data to clarify the DTA transition peak that appears upon cooling to approximately 250°C but diminishes with repeated (3-4 times) melting-cooling cycles. This work had to be suspended due to development of difficulties in the high-temperature X-ray unit.

Study of the DTA thermograms for the KCl-CsCl system will continue with assistance of the X-ray technique.

3. Cesium Source Testing

To fulfill the obligation to test cesium sources (BNL strip type) for the U. S. Army Natick Irradiator, test equipment was constructed to thermally cycle sources between -80 and 120°C. The equipment consists of a small motor-driven cable that slowly lowers the source into a -80°C dry ice-trichloroethylene bath for 10 min and then raises the source into an electric tube heater at 300°C for 7 min.

Thermal cycle testing of the cesium sources (BNL strip type) was continued. The testing of source F-66 was completed and no leak was detected following 2457 cycles, which is equivalent to 6.7 years' cycling in the Natick Irradiator.

The fourth and final source, F-70, was installed for testing on July 8, 1970, and has been cycled 1300 times with no leak detected.

E. Cesium-137 Pilot Production (Production and Inventory Accounts)

1. Processing and Process Status

Item	Cesium-137 (Ci)
In-process materials	173,000
$^{137}CsCl$ product	117,000
Sources in fabrication	660
Completed sources awaiting shipment	168,890
Total	459,550

2. Operational Summary

Cesium-137	July 1970		FY 1971	
	Number	Amount (Ci)	Number	Amount (Ci)
HAPO shipments received	0	0	0	0
Product batches prepared	0	0	0	0
Sources fabricated	7	7,000	7	7,000
Special form containers	7	77,000	7	77,000

One 20-Ci cesium-137 source was fabricated for American Nuclear Corporation. Six sources containing a total of 7000 Ci were fabricated for Atomic Energy of Canada, Ltd., and seven special form containers containing a total of 77,025 Ci were fabricated for Lockheed Georgia.

3. Current Orders

A list of current orders for cesium-137 source fabrication or powder shipments is shown below:

Customer	Amount (Ci)	Estimated Shipping Date
Brookhaven National Laboratory	203,000	March 1, 1971
Atomic Energy of Canada Limited	20,000	October 1, 1970
Radiochemical Centre, England	20,000	April 1, 1971
CEA, France	200,001	April 1, 1971
Radiation Resources, Inc.	200,001	
Miscellaneous orders	3,000	
Total	646,002	

Commitments for bulk powder awaiting source fabrication or shipment orders include American Nuclear Corporation, 174,300 Ci, and AECL, 160,000 Ci.

F. Strontium-90 Pilot Production (Production and Inventory Accounts)

1. Processing and Process Status

Item	Strontium-90 (Ci)
In-process materials	1,390,000
$^{90}SrTiO_3$ product	1,139,000
Sources in fabrication	0
Completed sources awaiting shipment	103,000
Returned SNAP sources	325,100
Total	2,957,100

2. Operational Summary

Nothing to report.

3. Current Orders

A list of current orders for strontium-90 is shown below:

Customer	Amount (Ci)
Isotopes, Inc.	153,000
U. S. Navy	661,000
Sanders Associates, Inc.	30,000
Mitsubishi International Corporation	10,000
Miscellaneous orders	3,000
Total	857,000

G. Short-Lived Fission Products Pilot Production (Production and Inventory Accounts)

Isotope	Number of Batches	Amount (Ci)
Xenon-133	2	1400
Iodine-131	1	38
Molybdenum-99	1	19
Ruthenium-103	1	32
Total		1489

H. Strontium-90 Silicate Sources

1. Matrix Studies

Matrix-type strontium-90 sources (strontium-90 bead in aluminum) were fabricated to meet sales requirements. Strontium-90 silicate beads that had been produced approximately 16 months ago were used in these fabrications. The long storage of fully loaded strontium-90 silicate beads did not appear to have caused any observable deterioration of the beads.

An approximately 4-in.-diam plaque was fabricated as well as a number of 10-in.-long cylinders 1/8 in. in diameter. The method used was vacuum impregnation as described in earlier reports. The 10-in.-long cylinders were cut into 1/4-in. lengths for encapsulation in 3/8-in.-long stainless steel capsules to be used as implant sources for the study of long-term, low-level radiation dose in animals.

2. Encapsulation

Capsules of the type used for matrix encapsulation (1/16-in.-diam hole in plug) were sent to a manufacturer of specialized welding equipment for demonstration of a dot welding process which involved projecting a drop of molten metal into the hole to be closed. This technique will be evaluated for use as a rapid welding method.

3. Characterization

The thermal conductivity of $^{90}SrSiO_3$ material used in the preparation of beta sources was determined. The $^{90}SrSiO_3$ source material contains approximately 12 mole % additives to alter the properties of the $^{90}SrSiO_3$. The additives, Li_2O, Al_2O_3, K_2O, and V_2O_5, are present in concentrations of approximately 1 to 5 mole %.[4]

A 1-in.-diam, 24.74-g pellet was prepared by hot pressing 100-mesh powder at 825°C and 4000 psi to a density of 3.02 g/cm^3. The thermal power of the pellet measured with a boiling water calorimeter was 4.68 W.

The thermal conductivity of the pellet was measured in an absolute thermal conductivity apparatus using the heat generated by the beta decay of strontium-90 and yttrium-90 as a known heat source for the measurements. The method and apparatus have been described previously.[5,6] The thermal conductivity values at various temperatures are shown in Table 4. The data from Table 4 have been fitted by the method of least squares to the equation:

---

[4]T. S. Mackey and F. N. Case, Preparation of Strontium-90 Silicate Beta Sources, ORNL-4340, Oak Ridge National Laboratory (February 1969).
[5]E. E. Ketchen, Thermal Conductivity of $^{90}SrTiO_3$ Heat Source Material, presented at the Nuclear Division Fall Meeting of the American Ceramic Society, Pittsburgh, October 8, 1968.
[6]E. E. Ketchen, Thermal Conductivity of Cm_2O_3, ORNL-TM-2915, Oak Ridge National Laboratory (April 1970).

$$1/k = 0.07075T - 0.772 \qquad (1)$$

where T is in °K and k is in $\frac{W \cdot cm}{cm^2 \cdot °C}$.

Table 4. Thermal Conductivity of a $^{90}SrSiO_3$ Specimen

Temperature (°C)	Thermal Conductivity ($W \cdot cm/cm^2 \cdot °C$)
447	0.01883
570	0.01697
707	0.01447
785	0.01426
906	0.01174

The 95% confidence band was calculated from Table 4 and Eq. (1). The plot of Eq. (1) [thermal resistivity (1/k) versus temperature] and the 95% confidence band are shown in Fig. 8. The thermal conductivity of $^{90}SrSiO_3$ from Eq. (1) and thermal conductivity of $^{90}SrTiO_3$ (ref. 7) are shown in Fig. 9 as a function of temperature. The slope of the thermal conductivity with temperature for $^{90}SrSiO_3$ is greater than the slope for $^{90}SrTiO_3$. The thermal conductivity of $SrSiO_3$ is about one-third that of $SrTiO_3$ over the temperature range 600-900°C. The thermal conductivity of $^{90}SrSiO_3$ material at 700°K is 0.0205 ($W \cdot cm/cm^2 \cdot °C$) compared with the thermal conductivity of pyrex glass which is 0.0165 ($W \cdot cm/cm^2 \cdot °C$) at 700°K.

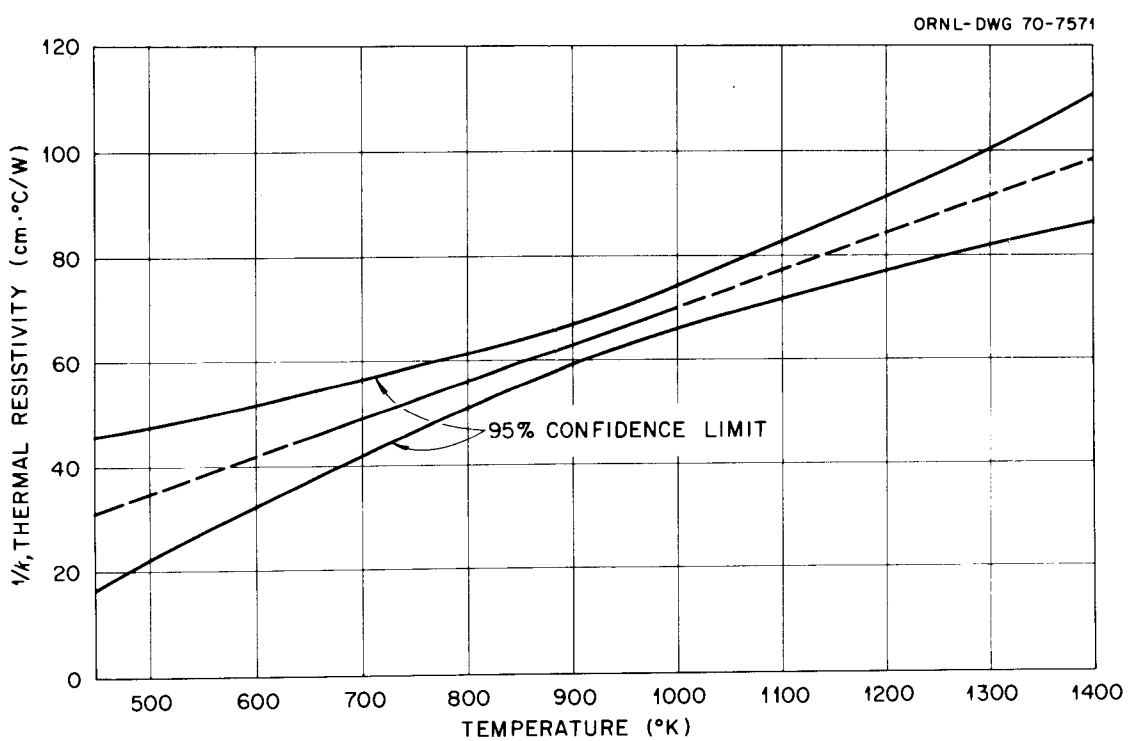

Fig. 8. Correlation of Thermal Conductivity Data for $^{90}SrSiO_3$.

[7]E. E. Ketchen, Thermal Conductivity of $^{90}SrTiO_3$ Heat Source Material, presented at the Nuclear Division Fall Meeting of the American Ceramic Society, Pittsburgh, October 8, 1968.

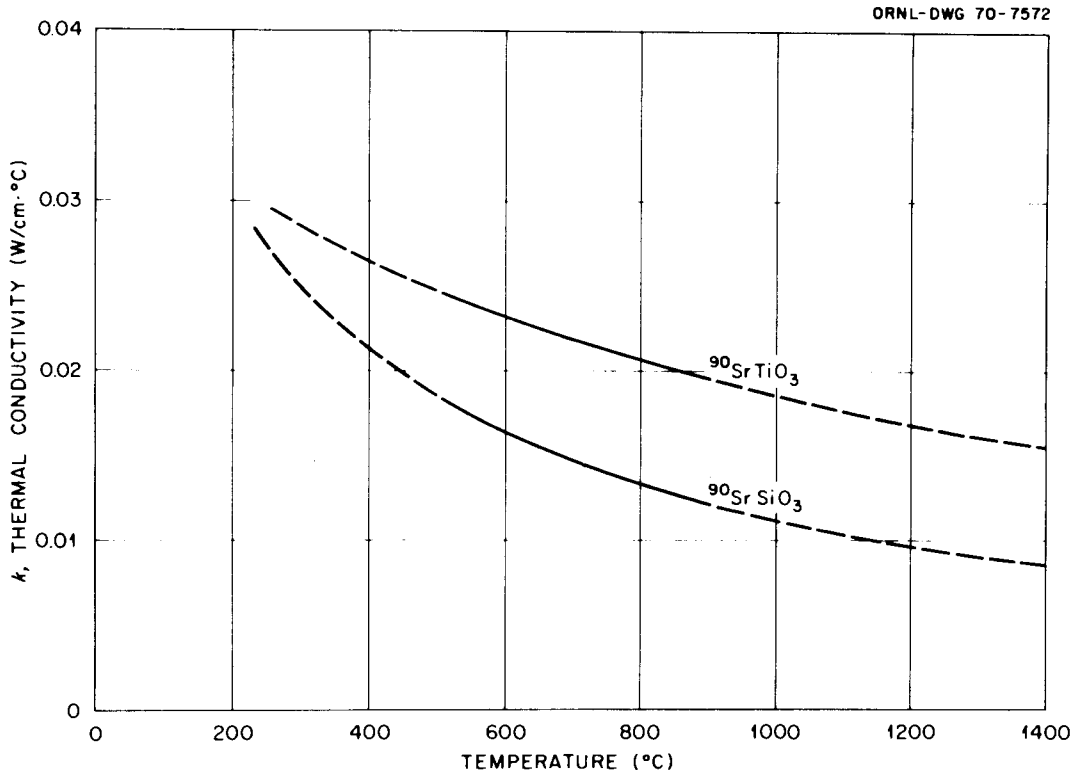

Fig. 9. Comparison of Thermal Conductivity of $^{90}SrSiO_3$ with $^{90}SrTiO_3$.

I. Strontium-90 Beta Sources

A matrix-type source containing 38 Ci of strontium-90 was prepared for use in a gaging instrument. This source consisted of an 0.118-in.-thick by 0.593-in.-diam disk of strontium-90 silicate beads in aluminum encapsulated in stainless steel with a 10-mil-thick stainless steel window.

A second source having the same dimensions was prepared for use in making output measurement studies in our source development program.

APPLICATIONS AND TECHNOLOGY SUPPORT - 08-01-04

A. Low-Energy Gamma and Secondary X-Ray Sources

1. Determination of Thickness of Erbium Metal Coatings on Molybdenum

In response to a customer inquiry we are developing a technique of measuring by nondestructive analytical methods the thickness of erbium metal evaporated onto molybdenum with an error of less than ±2%. The molybdenum metal is of uniform thickness, but the coating of erbium ranges in thickness from 1.0 to 10 μm. It is intended to measure thicknesses to 1 μm ±2% in 400 sec.

Measurement of the erbium layer thickness by the fluorescent X-ray technique utilizes the attenuation of the characteristic X ray of molybdenum in the erbium as a measure of the thickness of the deposit. The gamma radiation from 300 mCi of americium-241 is absorbed in cadmium to produce the characteristic X rays of cadmium, which are collimated to strike the erbium-coated molybdenum and produce molybdenum X rays. The portion of the molybdenum X ray which penetrates the erbium coating is measured by a Si(Li) detector. The detector system provides excellent resolution of the molybdenum K_α X ray (approximately 17.5 keV) with respect to the K_β X ray energy (20 keV). By utilizing a single photon emission of well defined energy, the K_α X ray, the sensitivity of measurement is enhanced.

A preliminary investigation to determine the feasibility of the method was made and reported.[8] Data obtained by using samples of uncoated molybdenum and fluorescing the molybdenum X ray were analyzed. The quantity of molybdenum K alpha radiation at the energy peak was the basis for the calculation of the absorption of molybdenum K alpha by erbium. This preliminary investigation indicated that approximately 2% of the incident molybdenum X ray would be absorbed by 1-μm thickness of erbium.

Molybdenum samples of uniform thickness and area which had been coated with different thicknesses of erbium were examined by the above described technique. Data obtained from the gamma spectrometer were recorded on punched paper tape, transferred to magnetic tape, and computer analyzed to correct errors introduced by the spectrometer analyzer. The corrected information was programmed into the computer. The energy peaks were recognized, refined, fitted to Gaussian curves, plotted, and the areas under the peaks were measured.

With this information concerning the molybdenum K alpha X ray, the ratio between the area under the energy peak and the peak height was calculated for all erbium-coated samples which were analyzed. These area-to-peak-height ratios were subjected to the method of least squares analysis to obtain a standard deviation of approximately 2% from the average ratio of 4.39. With the ratio between the peak height and the area under the curve as established within two standard deviations, the calculated curve as shown in Fig. 11 could be drawn by referring to Fig. 10 and multiplying the values on the curve by the established ratio of 4.39.

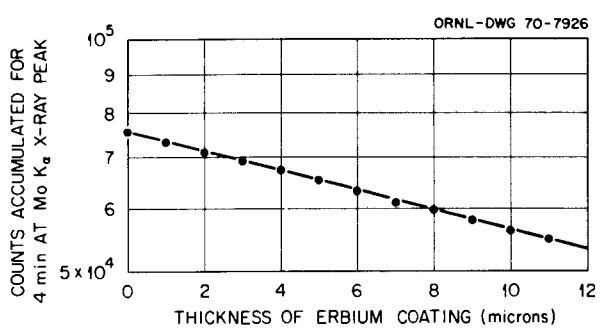

Fig. 10. Calculated Thickness of Erbium Coating as a Function of Molybdenum K_α X-Ray Peak Intensity.

[8]A. F. Rupp, Radioisotope Program (8000) Progress Report for June 1970, ORNL-TM-3080, Oak Ridge National Laboratory.

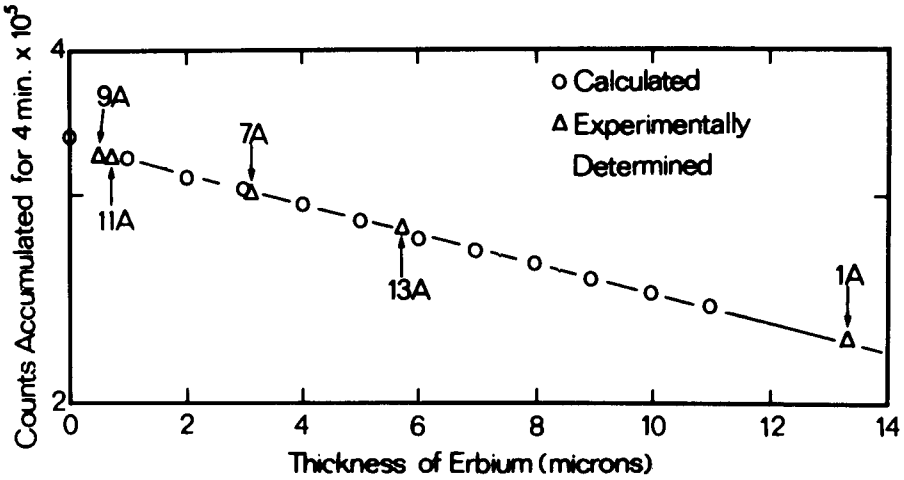

Fig. 11. Thickness of Erbium Coating as a Function of Molybdenum K_α X-Ray Peak Intensity.

The values obtained by computer analyses count rate of the molybdenum K alpha peaks for the various samples 1A, 7A, 13A, 11A, etc. can be fitted to the curve to establish the approximate thickness of the erbium on the molybdenum sample (see Fig. 11).

One may conclude at this time, with the available information, that the erbium coating on most of the samples is less than 10 μm thick. A more accurate curve can be drawn when the samples which have been analyzed by this method of X-ray fluorescence are also analyzed by gravimetric analyses to determine the amount of erbium on each molybdenum sample.

The slope of the curve in Fig. 11 is such that a difference of 8000 counts per 4 min represents a difference of 1-μm thickness of the erbium layer. The standard deviation of ±2% associated with our count-rate data thus far represents a limit of error of ±6700 counts per 4 min in the determination of the count rate associated with a 1-μm layer of erbium. Thus, a 1-μm layer of erbium could be determined to ±85% accuracy. The standard deviation in the count-rate data can probably be reduced to ±1%, but achieving an accuracy of ±2% on the measurement of a 1-μm thickness using this technique does not appear to be feasible. The technique does show promise in the measurement of layers applied to a backing with an accuracy of ±5% if the layer is about 10 μm thick.

B. Radioisotope Characterization, Quality Control, and Standards

1. Radioisotope Characterization

Because of interest in using induced silver-110m as a measure of thermal and resonance neutron fluxes (in combination with cobalt), our review of its properties was updated. On the decay scheme, the averages of gamma intensities from four investigations were confirmed by new work. The recommended percentage for the 658-keV gamma is 95 ± 1 and that for the

885-keV is 75 ± 2. This decay scheme is now well known. Our previous estimate of the half-life was updated with new values. The weighted and unweighted average of eight competent determinations is 252 days, and a plausible uncertainty is ±2. The average may be slightly high because of possible effects of approximately 127-year silver-108m.

The half-life of yttrium-88 was estimated by remeasuring the activity of an IAEA standard approximately 2-1/2 years after the original local measurement. Ascribing an error of 3% to the ratio of the two measurements, the half-life was calculated to be 106.1 ± 0.4 days, in essential agreement with values of 106.5 and 106.6 from the National Bureau of Standards. The sample will be retested periodically to provide more data.

2. Radioisotope Special Analysis and Quality Control

It is desirable to ascertain the quality of available standards for silver-110m. Preparations are therefore being ordered from Amersham/Searle Corporation (importers from the British Radiochemical Centre), Capintec Nuclear (importers from Saclay), and New England Nuclear Corporation, a leading United States supplier. Such standards are not available from the National Bureau of Standards or IAEA.

Measurements were made of a set of IAEA standards in two facilities of the local Radioisotopes-Radiochemistry Group. Agreement with the IAEA calibrations was satisfactory.

C. Radioisotope Safety

1. Special Form Prototype Testing

No special form prototypes were received for testing.

2. Surveillance of Regulations and Cask Evaluations

A request was submitted to DOT to modify the permit for the 10-ton californium cask to allow replacement of ball valves with shield plugs for certain types of shipments.

3. Source Leak Test Guide

Drafts have been returned from reviewers for revisions.

4. Unsealed Source Testing

Unsealed sources are tested to evaluate their ability to contain radioactive material under specified test conditions.

Six Cu-$^{241}AmO_2$ sources received from Pacific Northwest Laboratory were evaluated.

These sources have a 0.5-in.-diam by 13-μm-thick active layer of Cu-$^{241}AmO_2$. The backing is a copper strip, 0.625 x 0.625 x 0.030 in. The active layer

is covered by a 4-μm layer of copper and the entire source is covered by a 4-μm layer of stainless steel. All layers were deposited by radio-frequency sputtering, with each source containing approximately 3 mCi of americium-241. The sources are of the same construction as the previously tested[9,10] photon sources except for the much thinner surface layers of copper and stainless steel.

Each source was smeared for transferable contamination as it was removed from the shipping package. The results are shown in Table 5.

Table 5. Transferable Contamination - Americium-241 Sources

Source Number	Activity (dis/min alpha) Front Surface	Back Surface
S-Am-251A	1,200	18
S-Am-251B	3,426	24
S-Am-251C	588	15
S-Am-251D	1,242	30
S-Am-251E	2,109	30
S-Am-251F	11,556[a]	1,275

[a]Since this smear was relatively high, the front surface was cleaned with a wet cotton swab, dried and resmeared. The second smear was 11,664 dis/min (~0.0053 μCi).

In order to determine any decontamination effect due to repeated smear tests, the front (window) surfaces of two of the sources were each smear tested ten times. The results are given in Table 6. A definite decontaminating action was noted for source S-Am-251F which was highly contaminated initially. The comparatively high values obtained on smears 4, 6, and 10 on S-Am-251A may be attributed to individual particles stuck to the surface which were not readily dislodged.

Table 6. Consecutive Smear Results

Smear Number	S-Am-251A (dis/min alpha)	S-Am-251F (dis/min alpha)
1	888	37,149
2	528	30,186
3	189	6,408
4	1,611	6,303
5	216	4,869
6	2,859	8,073
7	600	6,780
8	246	6,309
9	348	2,106
10	2,130	3,045

The sources were then examined under a stereomicroscope which showed that, although the surfaces were relatively smooth, there were many small depressions and pits, many of which exposed the underlying copper layer. The sources were then subjected to a standard room temperature, 24-hr water leach test as specified in 10 CFR 32, Paragraph 32.102. The activity found in the leach water is given in Table 7. Several rust spots appeared on the edges of the sources during the 24-hr water leach test.

Table 7. Initial 24-hr Water Leach Test Results

Source Number	Activity[a] in Leach Water (dis/min alpha)	(μCi)
S-Am-251A	134	0.00006
S-Am-251B	509,000	0.229
S-Am-251C	18,240	0.008
S-Am-251D	102,700	0.046
S-Am-251E	26,500	0.012
S-Am-251F	125,800	0.057

[a]The maximum allowable loss in this test is 0.005 μCi (11,100 dis/min).

[9]A. F. Rupp, Radioisotope Program (8000) Progress Report for May 1970, ORNL-TM-3020, Oak Ridge National Laboratory.
[10]A. F. Rupp, ORNL-TM-3080.

Two of the sources (S-Am-251E and S-Am-251D) were subjected to the tests for the least stringent classification in the ORNL Source Capsule Classification System (Class I-A). The tests and results are described in section a below. The remaining four sources were subjected to tests which are not required as a part of the Class I-A requirements but which were deemed desirable as a result of conversations among ORNL, PNL, and DID. These tests and results are described in sections b, c, d, e, and f below. All of the sources were then subjected to a final 24-hr leach test using the same procedure as was used for the initial 24-hr leach test.

a. ORNL Source Capsule Classification Tests

(1) Class A Operating Temperature Test

Source S-Am-251E was sealed in a bottle and immersed in an ice bath (32°F) for 24 hr. It was then placed in a furnace and heated in air to 212°F for 24 hr. The source smeared 57,594 dis/min before the test and 21,003 dis/min after the test. No visible damage was found.

(2) Class A Thermal Shock Test

Source S-Am-251E was heated to 212°F, then plunged into a bath of ice water (32°F), removed after one minute, and placed in a container of dry ice (-70°F) for 15 min. The source smeared 17,355 dis/min before the test and 11,324 dis/min after the test. No damage was found in visual examination.

(3) Class A Maximum Temperature Test

Source S-Am-251E was heated in air at 400°F for 1 hr, then cooled to room temperature. The source smeared 11,324 dis/min before the test and 3825 dis/min after the test. The only visible change was a slight darkening of the color of the source.

(4) Class I External Pressure Test

Source S-Am-251D was placed in a pressure vessel and held for 15 min at 30 psig. The source smeared 35,343 dis/min before the test and 14,796 dis/min after the test. No damage was visible.

(5) Class I Shear Strength Test

Source S-Am-251D was placed in the shear blocks and a force of 40 lb was applied for 30 min. The source smeared 14,121 dis/min before the test and 4,821 dis/min after the test. The test left an indentation on the source, but no break in the metal was observed.

(6) Class I Puncture Test

Source S-Am-251D was placed with the active surface on the 1/8-in.-diam pin and a 2-g weight was dropped from a height of 3 ft, striking the opposite side of the source. The source smeared 4,821 dis/min before the test and 12,909 dis/min after the test. The pin made a slight indentation in the active surface, but no visible break in the metal surface was found.

(7) Class I Crushing Force Test

Source S-Am-251D was placed between two smooth plates and a force of 200 lb was applied for 15 min. The source smeared 12,909 dis/min before the test and 16,656 dis/min after the test. No damage was visible during the test.

(8) Class I Impact Force Test

Source S-Am-251D was placed between two smooth steel plates and a 5-lb weight was dropped from a height of 4 ft, striking the top plate. The source smeared 16,656 dis/min before the test and 6,543 dis/min after the test. The impact test flattened the metal somewhat, but no breaks were visible in the surface.

b. Boiling Water Leach Test

Source S-Am-251B was subjected to a 19-day boiling water leach test. In this test the source was immersed in 50 ml of distilled water which was maintained at the boiling point. A total reflux condenser was used to prevent evaporative losses, and the water removed for analysis was replaced with equal amounts of fresh distilled water.

On the eighth day of the test the leach water took on a slightly "milky" appearance. The discoloration was not as prominent as that observed in previous testing[11,12] of the $^{241}AmO_2$ photon sources. At the end of the test, the activity in the analysis samples plus that remaining in the leach water totaled 304,219 dis/min (0.137 μCi). Several rust-colored areas were observed, some of the edges and depressions acquired a brown-black appearance, and some of the stainless steel was missing from the edges of the source. The source was not smeared before the test. After the test it smeared 11,604 dis/min.

c. Temperature-Humidity Test

This test was performed by placing the source in an environmental chamber programmed for 8 hr at 131°F and 90% relative humidity and 8 hr at 36°F and 50% relative humidity. A period of 4 hr was provided for making the

[11]A. F. Rupp, ORNL-TM-3020.
[12]A. F. Rupp, ORNL-TM-3080.

change from the high temperature conditions to the low temperature conditions and another 4 hr was provided for making the change from the low to the high temperature conditions, thus giving one complete cycle every 24 hr. A shield was placed over the source to make certain that condensate could not inadvertently fall on it. The source (S-Am-251C) smeared 2688 dis/min before the test and 132 dis/min after the test. Additional smear tests were made at approximately 4-day intervals during the 30-day test period. The activity on the smears gradually decreased from the initial value of 2688 dis/min to 132 dis/min at the end of the test, indicating that the smear tests were gradually decontaminating the surface of the source. During the test, several patches of heavy corrosion (rust colored) appeared on the source, and those areas which were corroded during the initial 24-hr leach test continued to corrode.

d. Elevated Temperature Test

Source S-Am-251A was placed in a quartz tube and heated according to the time-temperature curve of the Underwriters' Laboratory 1-hr fire test. The furnace was preheated to 500°F in order to meet the requirement of 1000°F at 5 min. A dry air flow of 720 ml/min (2.4 cm/sec velocity at the test source) was passed over the source to sweep out any activity which might become airborne. The air stream was then passed through either a 1.2-μm or an 0.45-μm Millipore filter in order to collect any activity for counting. Two identical filtering systems (except for pore size) were used alternately so that the filters could be changed without interrupting the flow during filter changes. The temperature was monitored by a calibrated thermocouple located immediately above the active surface of the source.

The filter was changed every 15 min during the first hour of the test. During this time the source temperature increased from 78 to 1700°F. During the remainder of the test, the temperature was maintained at 1700°F. The filters were changed every half-hour for the next 3 hr and then every hour for the next 3 hr, making a total test time of 7 hr. Essentially no activity (<21 dis/min) was found on any of the 13 filters. At the end of the test, the internal surfaces of the quartz furnace tube were smeared. These smears were all background except for one which smeared 30 dis/min. The edges of the source were damaged slightly during removal because the source stuck to the quartz furnace tube. The surfaces of the source were heavily oxidized during the test, but there was no indication of blister formation as in the case of the photon source previously tested. The source smeared 384 dis/min before the test and 11,324 dis/min after the test.

e. Ultrasonic Cleaning Test

Source S-Am-251F was subjected to a 24-hr ultrasonic cleaning test using distilled water as the immersion fluid. During the test, the water temperature increased from room temperature to 60°C during the first 3 hr and remained at approximately 60°C during the remainder of the test. The cleaner was a small 100-W laboratory type. Due to an equipment failure the ultrasonic cleaner lost approximately half its power about half-way

through the test. Before the test, the source smeared 8,940 dis/min and after the test the source smeared 37,779 dis/min. The results from periodic samples of the immersion water are given in Table 8.

At the end of the test most of the stainless steel layer was gone on the edges of the source and some was missing from the active surface of the source, exposing the undercoating of copper.

Table 8. Total Activity in the Liquid

Time	Amount of Activity (dis/min alpha)	(μCi)
After 15 min	70,656	0.032
After 1 hr	89,664	0.040
After 2 hr	218,880	0.099
After 24 hr	6,156,480	2.773

f. Final 24-hr Water Leach Test

After completion of the above tests the sources were given a final 24-hr water leach test. Smear tests were made before and after this test. During the test, new rust spots occurred and old ones continued to corrode. The results are given in Table 9.

Table 9. Final 24-hr Water Leach Test Results

Source Number	Smear Test (dis/min alpha) Before	After	Activity in Leachwater (μCi)
S-Am-251A	11,324	286,575	3.935
S-Am-251B	11,604	55,622	0.046
S-Am-251C	132	6,222	0.013
S-Am-251D	6,543	a	0.014
S-Am-251E	3,825	44,000	0.023
S-Am-251F	33,342	66,000	0.009

[a]Blocked counter.

TECHNOLOGY UTILIZATION - 08-01-05

A. Information Center

In the Isotopes Information Center, the rate of accessioning increased; 255 documents were accessioned, bringing the total to 19,455. Eighty-nine hundred of these are on computer, and printouts of searches of this group are being sent in answer to inquiries. Some 155 documents of various types were mailed in reply to 46 requests.

The number of reports and reprints mailed from the Center during FY 1970 in answer to requests for information is shown below:

Isotopes and Radiation Technology reprints	559
ORNL-IIC reports	2743
Understanding the Atom Series	309
Miscellaneous reprints and reports	218
Total	3829

Permuted indexes (bibliographic, personal author, corporate author, and keyword) to volume 1 of Isotopes and Radiation Technology are now available. These will be followed regularly by indexes to subsequent volumes until the indexes to all volumes have been prepared. A list of reviews in progress (for answering future queries) is shown below:

Title	Author(s)	Status, % Complete
Cement-Polymer Combinations	V. I. Solomatov, translated from Russian and edited by Martha Gerrard, P. S. Baker, and R. E. Greene	At printers
DID Research and Developments - 1969	Isotopes Information Center Staff	At printers
Indium-113m: Preparation and Uses	Martha Gerrard	10
Flow Measurement	R. H. Lafferty, Jr.	30
Iodine-125	P. S. Baker and Martha Gerrard	25
Isotopic Methods of Examination and Authentication in Art and Archaeology	F. J. Miller, E. V. Sayre, and B. Keisch	Galley proofing nearly complete
List of AEC Radioisotope Customers with Summary of Radioisotope Shipments, FY 1970	Ruth Curl, compiler	10
Oceanography[a]	Isotopes Information Center Staff	90
Patent Review - Process Radiation Development	R. E. Greene, P. S. Baker and Helen Warren	97
Potato Sprout Inhibition by Radiation	F. E. McKinney	40
Radiation vs Glass[b]	D. N. Hess	20
Radioisotopes in the Pharmaceutical Industry	P. S. Baker and Martha Gerrard	5
Radioisotopes in the Steel Industry[c]	Republic Steel Corporation	10
Radioisotopes in X-Ray Fluorescence Analysis	R. H. Lafferty, Jr.	5
Selected Abstracts of World Literature on Production and Industrial Uses of Radioisotopes	Martha Gerrard and P. S. Baker	50
Self-Diffusion in Liquids	F. J. Miller	75
Strontium-90	Roberta Shor, R. H. Lafferty, Jr., and P. S. Baker	100[d]
Technetium-99m: Preparation and Uses	Martha Gerrard and P. S. Baker	30
Radioisotopes in the Textile Industry	F. J. Miller	90
Use of Radioisotopes in Sedimentology	V. Romanovsky, translated and edited by Martha Gerrard	10
Grain Disinfestation - A Worldwide Review	F. E. McKinney	20
Wood Plastics	R. E. Greene	85
Yttrium-90	Martha Gerrard	10
Permuted Isotopes and Radiation Technology Indexes	Helen Raaen	30
Presowing Irradiation of Seeds	Machine translation of Russian book, edited by Martha Gerrard and P. S. Baker	1st draft complete

[a] Draft completed; being held at DID.
[b] Indefinite.
[c] Will be in sections; first section now in hand.
[d] Draft completed; DID reviewing.

B. Isotopes and Radiation Technology

Writing and editing are under way for Isotopes and Radiation Technology 8(3), and articles are being collected for the Environmental Issue.

RADIOISOTOPE APPLICATIONS DEVELOPMENT

BASIC TECHNOLOGY DEVELOPMENT - 08-03-01

A. Liquid Scintillation Development

1. Cerenkov Counting

Nothing to report.

SYSTEMS ENGINEERING APPLICATIONS - 08-03-02

A. Oceanographic Systems Study

Radionuclides appear to be useful tools to study sand transport phenomena and, although many experiments have been conducted to demonstrate their effectiveness as tracers, little is known concerning whether or not the dynamic systems in which they are used can be tagged well enough to achieve quantitative data leading to an understanding of basic mechanisms. The Radioisotope Sand Tracing (RIST) study has progressed through equipment development to the point where important system tagging parameters can be studied.

A field experiment was conducted at Point Mugu, California. Operations began June 22 and terminated July 2, 1970. Four plug injections, four point injections, and one line injection were inserted during the experiment.

Two plug injections were at -15 ft and two were at +3 ft. Very good data were obtained from the -15 ft plugs; however, the +3 ft plugs were buried by approximately 6 in. of fill soon after injection, and data from these two injections are questionable at this time. In-depth studies of the +3 ft data may reveal useful information. Data from the -15 ft plugs will be used to generate the first model formulas necessary to calculate volume transport.

Three point injections were made at -15 ft. Sand of a particular grain size - coarse, medium, or fine - was used in each injection. The injections were surveyed and a definite correlation between particle size and sand transport was established.

A fourth point injection was made in the zone of fast transport, just seaward of the breaker zone. This test confirms data from previous tests which have indicated high sand transport rates from this zone.

A line source was injected north of the groin to observe sand transport patterns through the experimental groin. The groin panels will be installed in September and the next experiment will trace the impoundment of sand. This will provide a comparison of the behavior of sand before and after the installation of a groin.

Observations by personnel at the test site indicate a successful experiment.

Final processing of the Oceanside data is progressing. Figure 12 shows a sample contour obtained by computer drawing. This plot is of particular interest to radionuclide tracing because it shows very excellent contour maps of sediment transport obtained with radionuclides in a location where the use of fluorescent tracing methods previously used to conduct sediment transport surveys provided essentially no data. Also shown is the use of line, point, and plug injection methods.

The line injection of tagged sand was made on February 5, 1970, and the point injections on February 10, 1970. Figure 12 shows the distribution of tagged sand on February 12, 1970. The sand from the line injection moved through an ocean cycle that transported it south for several days and then reversed. As a consequence, the net movement is north.

RADIOISOTOPE SALES

An order was received from the U. S. Navy for 104,000 Ci of strontium-90 to be fabricated into sources as directed by Aerojet Nuclear Systems Company. An order was received from Mitsubishi International Corporation (Japan) for a 10,000-Ci strontium-90 source and from Sanders Associates, Inc. for a 30,000-Ci strontium-90 source.

Notable shipments made during July include 7,005 Ci of cesium-137 to Atomic Energy of Canada, 10,000 Ci of tritium to Radium-Chemie A. Zeller and Company, 6,206 Ci of cobalt-60 to Puerto Rico Nuclear Center, and 77,025 Ci of cesium-137 to Lockheed Georgia Company. Other shipments include 500 Ci of promethium-147, 45 g of plutonium-238, approximately 175,986 mCi of xenon-133, 645 Ci of krypton-85, 22,260 Ci of tritium, 500 mCi of enriched (22%) krypton-85, and 100 Ci of tritium-helium mixture. One ^{132}Te-^{132}I generator was loaded and shipped.

One outstanding large order is 100,000 Ci of promethium-147 to be shipped from Richland, Washington, to McDonnell Douglas Astronautics Company.

The radioisotope sales proceeds and shipments for FY 1969 and 1970 are given in Table 10.

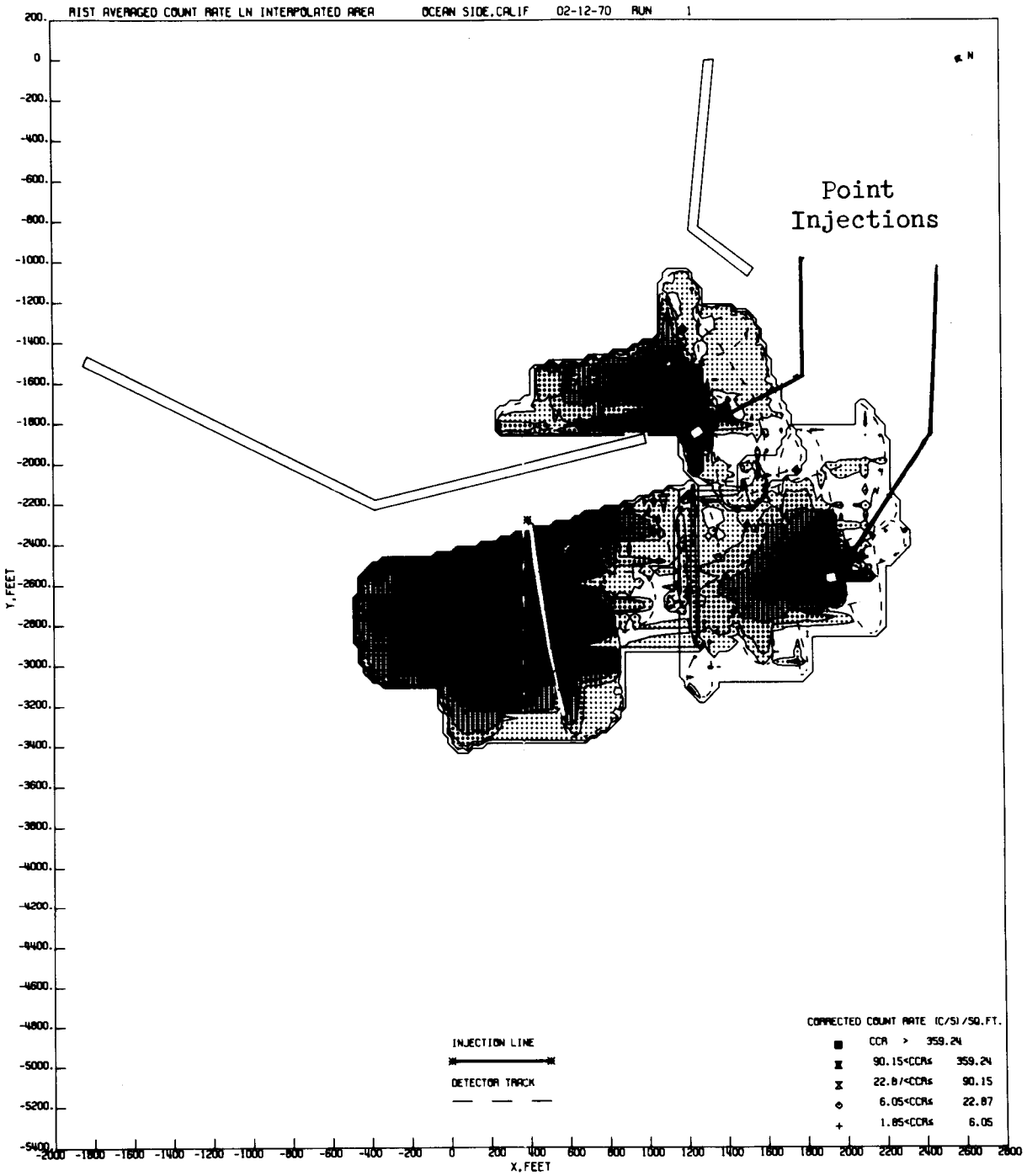

Fig. 12. Sample Contour by Computer Drawing.

Table 10. Radioisotope Sales and Shipments

Item	FY 1969	FY 1970
Inventory items	$ 917,898	$ 671,452
Major products	94,962	114,494
Radioisotope services	225,828	319,246
Cyclotron irradiations	170,037	134,046
Miscellaneous processed materials	72,821	80,893
Packing and shipping	85,339	77,657
Total Radioisotope Sales	$1,566,885	$1,397,788
Total Radioisotope Shipments	2,791	2,677

GENERAL OPERATIONS

DECONTAMINATION AND MAINTENANCE

A change in the schedule for decontamination and repairs in the manipulator cells was made due to a requirement for September deliveries of some large strontium-90 sources. In order to meet these commitments it was necessary to install a hot press temporarily in one of the source fabrication cells rather than waiting until the strontium-90 pelletization cell could be decontaminated and repaired. Powder handling, assaying, and preparation of loads for the hot press will be done in the cells normally used for ^{137}CsCl preparation. These cells were also scheduled for decontamination and repair. Sufficient decontamination was done in all of the cells involved in the temporary strontium-90 source fabrication system to permit installation of the necessary equipment by semi-remote means. The equipment is being checked out.

The main effect of the revised schedule will be to delay the refurbishing of the cesium-137 product preparation cells, since these cells will be occupied with strontium-90 powder handling. It is planned to continue maintenance work in the strontium-90 pelletization cell by isolating this cell from the rest of the system.

Installation of the new dehumidifier section of the hot-off-gas treatment system was completed. This section was installed between the existing scrubbers and final filters; it consists of a stainless steel prefilter, a chiller, and humidity monitoring instrumentation.

MISCELLANEOUS

Routine replacement of the absolute filters in the cell ventilation system was made. Compatibility testing of strontium-90 and curium-244 fuels at high temperatures was continued. For the first time in many months, disposal of solid contaminated waste is on a current basis.

A delay of one week was necessary in order to have an AECL representative present for the loading of a cobalt-60 source for the Puerto Rico Nuclear Center.

ADMINISTRATIVE SECTION

Travel by IDC personnel and visitors to the IDC are given in Tables 11 and 12, respectively.

Table 11. Travel of IDC Personnel

Site Visited	Purpose of Visit
Washington, D. C.	Assist DID in writing a historical report
	Attend 17th Annual Meeting of the Society of Nuclear Medicine
	Meet with Division of Biology and Medicine on Gallium-67 Program
	Discuss Kilowatt Program with AEC
Vanderbilt University	Discuss samarium-151 experiment
Wilmington, Delaware	Attend ANSI N-14 Committee meeting

Table 12. IDC Visitors

Visitors (affiliation)	Purpose of Visit
NASA Langley Field, Hampton, Va.	To experiment on ORNL 86-Inch Cyclotron
Radioisotope School, JAERI Tokyo, Japan	To obtain information on industrial applications of radioisotopes
Rigaku Denki Company Tokyo, Japan	To obtain information on industrial applications of radioisotopes
Japan Atomic Energy Research Institute, Tokyo, Japan	To discuss radioisotope production
Tokai Research Establishment Tokaimura, Japan	To discuss radioisotope production
University of Miami, School of Medicine, Miami, Florida	To discuss biomedical radioisotopes

INTERNAL DISTRIBUTION

1. A. L. Allen
2. M. A. Baker
3. P. S. Baker
4. E. E. Beauchamp
5. G. E. Boyd
6-8. T. A. Butler
9. F. N. Case
10. J. A. Cox
11. F. L. Culler
12. W. C. Davis
13. J. S. Drury
14. J. H. Gillette
15. H. R. Gwinn
16. R. F. Hibbs
17. K. E. Jamison
18. Lynda Kern
19. E. H. Kobisk
20. E. Lamb
21. R. E. Leuze
22. J. L. Liverman
23. L. O. Love
24. W. S. Lyon
25. R. E. McHenry
26. F. M. O'Hara
27. W. W. Parkinson
28. J. J. Pinajian
29. M. E. Ramsey
30. S. A. Reynolds
31-32. R. A. Robinson
33. D. A. Ross
34. A. F. Rupp
35. R. W. Schaich
36. A. H. Snell
37. K. A. Spainhour
38. M. R. Skidmore
39-40. H. F. Stringfield
41. A. M. Weinberg
42. J. C. White
43-44. Central Research Library
45. Document Reference Section
46-50. Laboratory Records Department
51. Laboratory Records - RC

EXTERNAL DISTRIBUTION

52. G. A. Andrews, ORAU, Medical Division, Oak Ridge, Tennessee
53. Hal Atkins, Brookhaven National Laboratory, Upton, New York
54. D. S. Ballantine, AEC, Washington, D. C.
55-58. R. F. Barker, AEC, Washington, D. C.
59. N. F. Barr, AEC, Washington, D. C.
60. O. M. Bizzell, AEC, Washington, D. C.
61. C. R. Buchanan, AEC, Washington, D. C.
62. R. L. Butenhoff, AEC, Washington, D. C.
63. T. D. Chikalla, PNL, Richland, Washington
64. D. F. Cope, AEC Site Representative, ORNL
65. D. C. Davis, AEC, Oak Ridge, Tennessee
66. J. C. Dempsey, AEC, Washington, D. C.
67. W. K. Eister, AEC, Washington, D. C.
68. E. E. Fowler, AEC, Washington, D. C.
69. J. D. Goldstein, AEC, Washington, D. C.
70. A. Gottschalk, Argonne Cancer Research Hospital, Chicago, Illinois
71. F. D. Haines, AEC, Washington, D. C.
72-74. J. E. Hansen, PNL, Richland, Washington
75. J. W. Irvine, MIT (Consultant)
76. J. Lawrence, Lawrence Radiation Laboratory, Berkeley, California
77. J. E. Machurek, AEC, Washington, D. C.
78. J. N. Maddox, AEC, Washington, D. C.
79. J. C. Malaro, AEC, Washington, D. C.
80. W. E. Mott, AEC, Washington, D. C.
81. J. A. Powers, AEC, Washington, D. C.
82. G. J. Rotariu, AEC, Washington, D. C.

83. B. A. Ryan, AEC, Richland, Washington
84. W. D. Sandberg, AEC, Aiken, South Carolina
85. S. J. Seiken, AEC, Washington, D. C.
86. R. W. Shivers, AEC, Washington, D. C.
87. P. E. Smith, ARHCO, Richland, Washington
88. L. G. Stang, Jr., BNL, New York
89. G. Taplin, University of California, Los Angeles, California
90-95. D. H. Turno, SRL, Aiken, South Carolina
96. A. R. Van Dyken, AEC, Washington, D. C.
97. Laboratory and University Division
98-112. Division of Technical Information Extension