LOCKHEED MARTIN ENERGY RESEARCH LIBRARIES
3 4456 0514374 2

CENTRAL RESEARCH LIBRARY
DOCUMENT COLLECTION

OAK RIDGE NATIONAL LABORATORY
operated by
UNION CARBIDE CORPORATION
for the
U. S. ATOMIC ENERGY COMMISSION

ORNL-TM-3254

Cy. 44

RADIOISOTOPE PROGRAM (8000) PROGRESS REPORT FOR NOVEMBER 1970

A. F. Rupp

OAK RIDGE NATIONAL LABORATORY
CENTRAL RESEARCH LIBRARY
DOCUMENT COLLECTION
LIBRARY LOAN COPY
DO NOT TRANSFER TO ANOTHER PERSON
If you wish someone else to see this document, send in name with document and the library will arrange a loan.
UCN-7969
(3 3-67)

NOTICE This document contains information of a preliminary nature and was prepared primarily for internal use at the Oak Ridge National Laboratory. It is subject to revision or correction and therefore does not represent a final report.

This report was prepared as an account of work sponsored by the United States Government. Neither the United States nor the United States Atomic Energy Commission, nor any of their employees, nor any of their contractors, subcontractors, or their employees, makes any warranty, express or implied, or assumes any legal liability or responsibility for the accuracy, completeness or usefulness of any information, apparatus, product or process disclosed, or represents that its use would not infringe privately owned rights.

ORNL-TM-3254

Contract No. W-7405-eng-26

Isotopes Development Center

RADIOISOTOPE PROGRAM (8000) PROGRESS REPORT FOR NOVEMBER 1970

A. F. Rupp

Work Sponsored by

AEC Division of Isotopes Development

DECEMBER 1970

OAK RIDGE NATIONAL LABORATORY
Oak Ridge, Tennessee
operated by
UNION CARBIDE CORPORATION
for the
U.S. ATOMIC ENERGY COMMISSION

LOCKHEED MARTIN ENERGY RESEARCH LIBRARIES

3 4456 0514374 2

CONTENTS

Page

RADIOISOTOPE PRODUCTION AND MATERIALS DEVELOPMENT 1

REACTOR-PRODUCED ISOTOPES - 08-01-01 1

A. Biomedical Radioisotopes 1

1. Phosphorus-33 1
2. Potassium-43 2

B. Exploratory Development of Products and Techniques 4

1. Gadolinium-153 4

C. Isotopic Power 4

1. Thulium-170 4

D. Reactor Products Pilot Production 5

E. Miscellaneous 5

1. HFIR Target Testing 5
2. Krypton-85 Light Sources 5

ACCELERATOR PRODUCTS - 08-01-02 6

A. Biomedical Radioisotopes 6

1. Gallium-67 6
2. Indium-111 7

B. Miscellaneous 7

1. Iodine-123 7

C. Accelerator Pilot Production 8

FISSION PRODUCTS - 08-01-03 8

A. Krypton-85 Enrichment 8

B. Cesium-137 Gamma Source Development 9

1. Cesium Source Form Development 9
2. Cesium-137 Source Form Characterization 11

C. Cesium-137 Pilot Production 12

1. Processing and Process Status 12
2. Operational Summary 14

Page

3. Current Orders 14
4. Source Fabrication and Special Form Containers 14

D. Strontium-90 Pilot Production 15

1. Processing and Process Status 15
2. Operational Summary 16
3. Current Orders 16
4. Source Fabrication and Special Form Containers 16

E. Short-Lived Fission Products Pilot Production 17

F. Strontium-90 Silicate Beta Sources 17

1. Matrix Studies 17
2. Strontium Silicate Compatibility Studies and Physical Properties 18
3. Source Output Measurements 18

G. Promethium-147 Source Fabrication, Powder Shipments, and Current Orders 18

APPLICATIONS AND TECHNOLOGY SUPPORT - 08-01-04 19

A. Low-Energy Gamma and Secondary X-Ray Sources 19

1. Literature Survey on the Design of Americium-241 Sources 19
2. Americium-241 Annular Source for Vanderbilt University Hospital 19
3. Plutonium-238 Source Evaluation 20

B. Radioisotope Characterization, Quality Control, and Standards 20

1. Radioisotope Characterization 20
2. Radioisotope Special Analysis and Quality Control . . . 21

C. Radioisotope Safety 21

1. Surveillance of Regulations and Cask Evaluations 21
2. Dose-Rate Measurements of Self-Luminous Light Sources . 22
3. Tritium Foil Studies 23

TECHNOLOGY UTILIZATION - 08-01-05 24

A. Information Center 24

B. Isotopes and Radiation Technology 25

C. Publication 25

Page

RADIOISOTOPE APPLICATIONS DEVELOPMENT 25

SYSTEMS ENGINEERING APPLICATIONS - 08-03-02 25

A. Oceanographic Systems Study 25

RADIOISOTOPE SALES 26

ADMINISTRATIVE 27

PUBLICATIONS 28

JOURNALS 28

REPORTS 28

PAPERS PRESENTED AT SCIENTIFIC MEETINGS 28

RADIOISOTOPE PROGRAM (8000) PROGRESS REPORT FOR NOVEMBER 1970

A. F. Rupp

RADIOISOTOPE PRODUCTION AND MATERIALS DEVELOPMENT

REACTOR-PRODUCED ISOTOPES - 08-01-01

A. Biomedical Radioisotopes

1. Phosphorus-33

The purpose of this project is to develop methods of preparing hundred-millicurie quantities of carrier-free phosphorus-33 containing ≤5% phosphorus-32. Phosphorus-33 (25.2 days; 0.248-MeV β^-_{max}) has both a longer half-life and a lower energy beta than phosphorus-32 (14.3 days; 1.709-MeV β^-_{max}), which makes it advantageous for autoradiography, long-term ecological and agricultural studies, synthesis of tagged complex organophosphorus compounds, and double labeling experiments.

Two methods of producing phosphorus-33 are being evaluated. Both methods are based on the irradiation of highly enriched targets, either sulfur-33 (>92 at. %) or chlorine-36 (approximately 63 at. %), in a fast neutron flux to produce phosphorus-33 by either the $^{33}S(n,p)^{33}P$ or $^{36}Cl(n,\alpha)^{33}P$ reaction, respectively. Highly enriched targets are required in order to reduce the phosphorus-32 content of the product and to meet the product specification of ≤5% phosphorus-32.

Preliminary work was begun on the separation of carrier-free phosphorus from macro amounts of KCl by chromatographic adsorption from aqueous solution on an activated charcoal column. If this separation procedure works, it will offer a simple, rapid, direct method for separating carrier-free phosphorus-33 from the $K^{36}Cl$ target without the addition of unwanted cations or anions. Such a separation procedure should also offer shorter target turn-around times (i.e., the time from removal of the target from the reactor, through its chemical separation, reprocessing, and recovery, and until it is reinserted for a new production run) and improved target purity and performance. The initial experiments on this separation procedure were very encouraging and will be continued during December. Initial results indicate that greater than 85% of the carrier-free phosphorus can be separated from approximately 1.5 g of KCl contained in a synthetic dissolver solution similar to a phosphorus-33 process dissolver solution. The remaining phosphorus, less than 15%, was eluted from the column with the KCl fraction. Future work will be aimed at characterization of carrier-free phosphorus behavior on such a column and on the recoveries of both the KCl target material and the phosphorus product.

2. Potassium-43

The objectives of this project are: to prepare potassium-43 by the $^{43}Ca(n,p)^{43}K$ reaction, using isotopically enriched ^{43}CaO targets, in quantities sufficient for medical and biological experiments; to define a method for separating potassium-43 from the target in a purity suitable for medical use; and to establish cooperative programs with medical institutions interested in evaluating its usefulness.

Potassium-42 has been used, primarily in animals, to locate tumors, to tag red blood cells, and to study blood flow, but it has very limited use in humans because of its high beta energy (3.53 MeV), its high-energy (1.52 MeV) gamma ray, and its relatively short half-life (12.4 hr). Potassium-43, with a half-life of 22.4 hr and gamma-ray emissions of 0.373 and 0.617 MeV, is more suitable for metabolic and clinical studies because the lower dose rate would permit multiple doses. It has been suggested as a possible tool for studying blood flow through the heart and for diagnosing myocardial infarctions or immune rejection of transplanted organs. It has also proved capable of diffusing through a kidney with greatly reduced renal function, providing a good image of this organ.

A target containing 151.7 mg of enriched ^{43}CaO was processed. Several changes in conditions occurred during this run. The single target was made larger by omitting the aluminum bead packing from the capsule, which allowed the use of a larger quartz ampule. The reactor shut down prematurely after 45 hr, and the unopened rabbit was reinserted at a later date. The second irradiation was for 83.5 hr instead of the usual 65 hr. When the rabbit was opened, it was discovered that the quartz ampule was cracked and a small amount of target had leaked out. The ampule was not washed as usual; it was broken and the target was dissolved in HCl. The solution was transferred to a hood for ion-exchange processing; the calcium was taken up on the column and washed with 50 ml of 0.2 N HCl instead of the usual 100 ml. Good separation between sodium and potassium was obtained and the process time was decreased. Simple equipment and shielding were shown to be adequate for this process.

The calcium-43 used for the target was recovered from previously used material. The radionuclides (as determined from gamma scans) found in the dissolver sample are shown in Table 1.

Comparison of this target with the irradiation of a similar target material yields some interesting observations. The specific activity of potassium-42 was that expected from the saturation, but the 65-hr irradiation produced 158 μCi of potassium-43 per mg; thus, the $^{43}K/^{42}K$ ratio improves with longer irradiation because potassium-43 was not at saturation. The sodium-24 should also be saturated in both targets, but it was only 10 μCi/mg in the previous target, giving evidence for sodium-24 contamination from the $^{27}Al(n,\alpha)^{24}Na$ reaction as a result of not washing the

Table 1. Radionuclides Found in Dissolver Sample by Gamma Scanning

Radionuclide	Half-life	Activity at Discharge[a] (mCi)	Specific Activity at Discharge (μCi per mg of target)
Potassium-43	22.4 h	26.5	175
Potassium-42	12.4 h	6.0	39
Sodium-24	15.0 h	4.5	30
Manganese-56	2.58 h	14.3	94
Strontium-87m	2.83 h	32.6	215
Calcium-47	4.53 d	0.46	3.0
Scandium-46	83.8 d	7.4	49
Scandium-47	3.35 d	0.76	5.0
Lanthanum-140	40.2 h	0.65	4.3
Samarium-153	46.8 h	4.1	27
Europium-154	7.8 y	0.06	0.4
Europium-156	15.2 d	5.4	36
Bromine-82	35.4 h	0.12	0.8

[a]Total target.

cracked ampule. The scandium-46 activity was only 17 μCi/mg, showing both the effect of the longer irradiation and the additional time for the calcium-45 in the target to decay to scandium-45 from time of recovery to target irradiation.

The total amount of potassium-43 produced, corrected to discharge time, was 25.6 mCi, for a recovery of 97%; this had decayed to 11.1 mCi at 8:00 AM on the day of delivery. Portions were shipped under medical cooperative programs to Johns Hopkins Medical Institution, University Hospitals of Cleveland, University of Mississippi Medical Center, and V. A. Hospital, Durham, North Carolina.

A sample of potassium-43 was gamma scanned for longer lived activities before it was shipped in October. The radionuclides detected were:

Hafnium-181	0.3 nCi/ml
Cerium-141	0.7 nCi/ml
Zirconium-95-Niobium-95	1 nCi/ml

B. Exploratory Development of Products and Techniques

1. Gadolinium-153

Gadolinium-153 (241 days) is an important radionuclide because it decays by electron capture yielding predominantly 100-keV photons. This energy range is useful in backscatter and transmission gaging, as well as having applications in fluorescent X-ray production; medical applications for bone-density gages and narrow-beam transmission for body scanning to supplement stethoscopic findings appear to be of importance also. An especially important part of our work is the preparation of highly enriched synthetic gadolinium-152 by extracting it chemically from exhausted europium control plates from HFIR. The greater than 90% enriched gadolinium-152 is not available from calutron separations, and in any case, it would be prohibitively expensive if it could not be obtained as a by-product.

An approximately 1-in. x 3-in. x 1/4-in. sample from a HFIR control rod containing 21 g of europium has been dissolved and processed for gadolinium removal.[1] Although chemical analysis has not been completed, approximations based on radiation readings indicate 98% removal of the europium from the product gadolinium. Additional processing to remove 99.99% of the remaining europium will be carried out. Since most of the europium has been removed, the second processing phase can be carried out in a lower level processing cell. The actual gadolinium yield from the sample will be available for the next report.

C. Isotopic Power

1. Thulium-170

The objectives of this research are to provide sufficient data on thulium-170, which has been proposed as an isotopic power source for short-duration missions, to permit reasonable assessment of its potential application, and to permit preliminary engineering design of power sources. The economics for reactor production of thulium-170 (128.5 day; $E_{\beta^-_{av}}$ = 0.32 MeV) from natural thulium-169 are favorable and the sesquioxide offers a promising fuel compound, having a practical specific power of approximately 2 W/g and a power density of approximately 16 W/cm^3. The study will include measurements of thermal conductivity and thermal diffusivity, leach rates for safety analysis, high-temperature compatibility with suitable containment metals, vapor pressure, and fuel form densification.

Double encapsulation of the eighteen $^{170}Tm_2O_3$-refractory metal compatibility couples was completed, including examination for any welding

---

[1] F. N. Case, E. H. Acree, and N. H. Cutshall, Production Study of Gadolinium-153, ORNL-TM-2632, Oak Ridge National Laboratory (August 1969).

defects. Loading of the compatibility couples into the furnace has been made to begin the exposure runs as outlined in Table 2 of the September report.[2]

D. Reactor Products Pilot Production (Production and Inventory Accounts)

Processed Units		Service Irradiations	
Radioisotope	Total (mCi)	Type	Number
Copper-67	11	U_3O_8	1
Calcium-47	10	Platinum-196	3
Rubidium-86	5,772	Y_2O_3	1
Tungsten-185	2,155	Niobium wire	1
		Molybdenum	2
Total	7,948		8

E. Miscellaneous

1. HFIR Target Testing

Six hydraulic tube rabbits passed leak and pressure tests. Four of these units were calcium-43 and zinc-67 targets that contained some radioactivity from previous irradiations.

2. Krypton-85 Light Sources

The self absorption of krypton-85 beta radiation in aluminum foils impregnated with krypton by the calutron was determined. The available foils are 0.005 in. thick. Expressed mathematically the activity measured through (n) foils is I, the source strength is I_o, and $I/I_o = e^{-kn}$. The constant k was found to have a value of 0.48.

If foils loaded to the same surface activity with krypton-85 are stacked, the addition of a fourth foil will increase the surface activity by about 10% and the incremental gain due to adding additional foils will progressively become smaller. The maximum practical surface radiation obtained by stacking impregnated foils is about 2.5 times the strength of a single foil. This factor might be increased if thinner foils with the same radioactivity content can be obtained.

---

[2]A. F. Rupp, Radioisotope Program (8000) Progress Report for September 1970, ORNL-TM-3183, Oak Ridge National Laboratory.

ACCELERATOR PRODUCTS - 08-01-02

A. Biomedical Radioisotopes

1. Gallium-67

The objectives of this program are to determine the optimal target configuration for gallium-67 (78 hr) production in acceptable purity and quantity and to provide gallium-67 for clinical applications research and development. Interest in this isotope has been spurred by evidence, obtained by the Medical Division of Oak Ridge Associated Universities (ORAU), of a high uptake of carrier-free gallium-67 by lymphoid tumors in both animals and humans.

Gallium-67 decays by electron capture with the emission of four main gamma rays of 93, 184, 296, and 388 keV with intensities of 40, 23, 20, and 8%, respectively. Carrier-free gallium-67 is produced by the $^{68}Zn(p,2n)^{67}Ga$ reaction by bombarding natural, high-purity zinc tubing targets (0.375-in. OD by 0.020-in. wall thickness) with 22-MeV protons in the ORNL 86-Inch Cyclotron. Irradiation of natural zinc also produces appreciable amounts of gallium-66 (9.5 hr) that must be allowed to decay before human use.

Two gallium-67 preparations totalling 325 mCi were shipped to ORAU during November, and 13 smaller orders were filled for clinicians interested in the application of this radionuclide. Additional target development was undertaken in an attempt to optimize the current natural zinc tube target design between (1) sufficient wall thickness to resist deformation by the cooling water pressure (approximately 140 psi) and to degrade the energy of the cyclotron beam sufficiently to yield large production rates for the $^{68}Zn(p,2n)^{67}Ga$ nuclear reaction and (2) wall thickness thin enough to allow rapid heat removal with a reduction of extreme localized heating which leads to premature target failure. High-purity zinc tubes, 3/8-in. OD by 0.030-in. wall thickness, were fabricated and tested with the results shown in Table 2. The performance of this new target design was so poor with respect to the regular 0.020-in. wall thickness target that additional testing on this target design will be deferred, and future effort will be directed towards the development of an enriched zinc-68 target to increase production capacity.

Table 2. Zinc Tube Target Operating Characteristics

	Tube Size	
	0.020-in. wall by 3/8-in. OD	0.030-in. wall by 3/8-in. OD
Average beam current	~315 μA	~280 μA
Integrated beam to failure	~1.2 mA-hr	~0.56 mA-hr
Thick-target production rate	~450 mCi/μA-hr	~470 mCi/μA-hr
Maximum production limit	~550 mCi	~260 mCi
^{66}Ga:^{67}Ga activity ratio at end of bombardment	~10	~14

2. Indium-111

The objectives of this program are twofold: (1) to elucidate, define and optimize pertinent production parameters (cyclotron target material, cyclotron beam energy and current conditions, adverse side reactions leading to undesirable isotopic impurities, target processing and product purification procedures, and target recovery, if necessary) and (2) to make sufficient material available to cooperative participants for their evaluation of indium-111 as a diagnostic radionuclide in medicine. Such applications would include spinal-cerebral cisternography, aerosol lung studies, delayed brain scanning, visualization of the lymphatic system, metabolic studies of indium-labeled macroaggregates and colloids, and possible applications for tumor localizations. Indium-111 has both a favorable decay scheme [gamma emissions of 173 keV (89%) and 247 keV (94%)] ideally suited for external detection and an optimal half-life (2.81 days) for labeling and distribution studies which must be carried out over 24 hr or longer. The use of indium in such lengthy studies is currently impossible with the indium-113m (1.66 hr) isotope now in general use.

One batch of indium-111 was prepared and portions of this batch were supplied to interested clinicians as a special research material on the basis of full-cost recovery. Commitments have been received from these clinicians, who are interested in testing the potential of this chemical analog of gallium as a radiotracer for tumor detection. Their tests will require indium-111 production over a period of 3-6 months.

B. Miscellaneous

As part of a continuing effort to assist cooperative participants and customers to fill specialized requirements for specific radionuclides not usually available, miscellaneous short-term tasks are occasionally undertaken. The demand or potential usefulness of these radionuclides is not considered adequate to justify extensive effort or a continuing development program, but the services performed are valuable to meet program objectives.

1. Iodine-123

One batch of iodine-123 was prepared and supplied to a clinician. Iodine-123 is a very useful radionuclide in medical diagnostic procedures because of its short half-life (13 hr), low-energy (0.159 MeV) gamma ray, and absence of beta radiation. The radiation dose to a patient from iodine-123 is only 0.03 that from an equivalent quantity of iodine-131 and 0.1 that from an equivalent quantity of iodine-125. Since this was the first batch of iodine-123 produced in more than a year, the radionuclidic purity of the product was thoroughly characterized to ensure that the highly enriched tellurium-123 target had not been inadvertently contaminated. The product composition was comparable to that cited by

Hupf et al.[3] as were the production and chemical yields. No future work is planned on this isotope until additional orders are received.

C. Accelerator Pilot Production (Production and Inventory Accounts)

Table 3 gives the November 1970 accelerator irradiations for ORNL and non-ORNL customers.

Table 3. Accelerator Irradiations for November 1970

Product	No. of Runs	Time (hr:min) Beam	Misc.	Total	Total Charges
		ORNL Programs			
Gallium-67	4	8:57	4:45	13:42	$1,077.39
Indium-111	1	2:30	1:05	3:35	371.82
Total		11:27	5:50	17:17	$1,449.21
		Non-ORNL Programs			
Rhodium-99	1	1:00	1:15	2:15	$ 360.10
Rubidium-84	1	3:00	0:35	3:35	Incomplete
Yttrium-87	1	3:30	1:15	4:45	750.10
Total		7:30	3:05	10:35	$1,110.20

FISSION PRODUCTS - 08-01-03

A. Krypton-85 Enrichment

No gas transfers were made in any of the units (see Fig. 1). The apparent drop in the count rate of CD is due to a correction in a scaling factor used with the counters. By this corrected factor the count rate for October would be 11,800 rather than 14,100. The count rates indicate the relative levels of enrichment.

Unit	Activity in Unit (Ci)	Time Since Last Product Removal (days)	Count Rate in Product Section (counts/min) Oct 1970	Nov 1970
A	—	194	—	—
AB	1537	70	8,500	10,050
B	1406	70	6,800	8,350
C	1566	70	6,400	8,550
CD	2281	240	14,100	12,000
D	1360	70	5,400	6,750

[3]H. B. Hupf, J. S. Eldridge, and J. E. Beaver, Production of Iodine-123 for Medical Applications, Intern. J. Appl. Radiation Isotopes 19: 341-51 (1968).

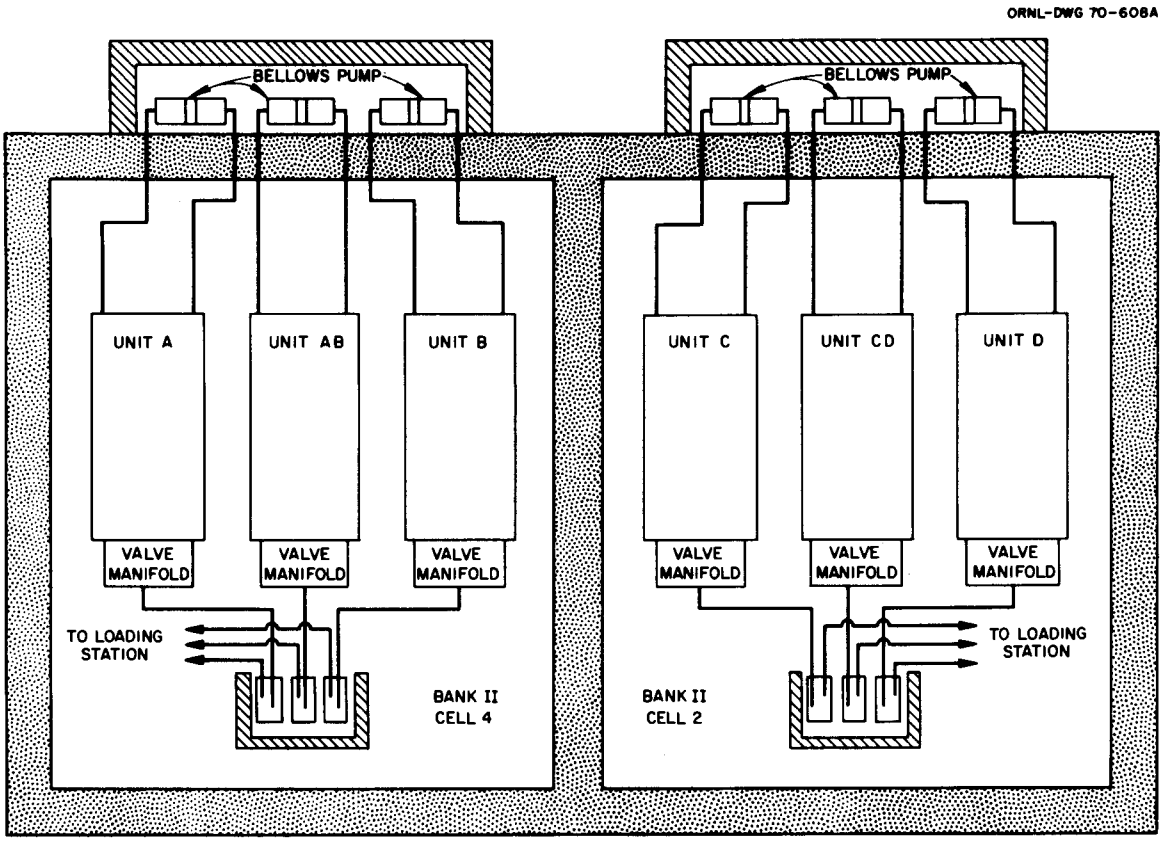

Fig. 1. Schematic Arrangement of Krypton-85 Columns.

B. Cesium-137 Gamma Source Development

1. Cesium Source Form Development

Cesium-137 chloride has been the compound of choice for radiation sources in applications of moderate temperature conditions. In many respects cesium chloride is the ideal compound; the cesium weight per unit volume is high, the radiation resistance of the CsCl is excellent, the compatibility with stainless steel at ambient temperatures is excellent, and its preparation is straightforward. However, the projected conditions of use of cesium-137 gamma sources are increasingly severe with respect to temperature, and some applications indicate the need for a cesium source material which has low solubility. In view of these projected conditions of use, the testing of ^{137}CsCl at elevated temperatures is being done and the development of a low solubility, temperature resistant source form of cesium is being studied.

a. CsOH Melt-Nb_2O_5 Reaction

Since the molten CsOH-Nb_2O_5 reaction is very slow in the low temperature range (up to approximately 500°C), the mixture had to be heated to approximately 1000°C to increase the reaction rate. Calculations from the result of chemical analysis of the product show an approximate molal composition Cs:Nb:O = 2:1:7. According to the literature, sodium and potassium form niobate salts of the type $xM_2O \cdot yNb_2O_5$, where M is either sodium or potassium, with the ratio of x to y ranging from 4 to 1/4 depending upon the relative proportions of the alkaline salt and Nb_2O_5 employed. The niobates containing cesium are presumably of the same type. Use of a large excess of alkali salt would tend to produce mixed niobates that are readily soluble in water, alkaline solutions, and acid solutions.

Since the X-ray diffraction data showed very little evidence of CsOH, Cs_2O, and Nb_2O_5, the major portion of material that had dissolved in HCl, HNO_3, and NaOH solutions (43% to 52%, ref. 4) probably represents niobates with high x:y ratios. This inference is also supported by the fact that a great excess of CsOH had to be used in the reaction primarily to maintain fluidity of the mixture.

b. Aqueous Slurry Reaction Between CsOH and Nb_2O_5

One of the possible methods for increasing the rate of the CsOH-Nb_2O_5 reaction at relatively low temperature (less than 200°C) is to introduce Nb_2O_5 powders into an aqueous solution of CsOH. This supposition is based on the observation that the hydrated Nb_2O_5 is chemically much more reactive than anhydrous Nb_2O_5. The reaction at low temperature is especially desirable from the standpoint of minimizing losses in cesium. The CsOH melt-Nb_2O_5 process in a moderately high temperature range (approximately 500°C) seems to be dominated by dehydration of CsOH to Cs_2O with the resulting cesium losses, since formation of cesium niobate is rather slow in this temperature range.

Slurried reaction mixtures consisting of Nb_2O_5 suspensions in concentrated CsOH solution were allowed to react at boiling point under reflux for various time intervals. One of the probable reaction mechanisms can be represented by:

$$Nb_2O_5 + xH_2O \rightarrow Nb_2O_5 \cdot xH_2O \rightarrow H_2Nb_2O_6 \cdot (x - 1)H_2O$$

$$H_2Nb_2O_6 \cdot (x - 1)H_2O + 2CsOH \rightarrow 2CsNbO_3\downarrow + (x + 1)H_2O$$

The slurry was then evaporated to dryness, followed by calcination at temperatures up to 1000°C.

Material balance calculations indicate that with a short reaction time the major losses in weight (approximately 2%, excluding H_2O losses) take place in the evaporation of slurry to dryness. Further losses of about

---

[4]A. F. Rupp, Radioisotope Program (8000) Progress Report for October 1970, ORNL-TM-3228, Oak Ridge National Laboratory.

1% occurred in the calcination step. The equivalent maximum cesium losses are calculated from the weight-loss data to be 8-12%. As the reaction time was extended, the total weight losses became almost negligible. It is estimated that less than 2% of the cesium was lost during the entire process. Such behavior is probably an indication that incomplete conversion due to insufficient reaction time would result in cesium losses. Solubility experiments using one of the products from runs with short reaction times showed that about 10-20% of the material was soluble in 0.1 N HCl, 0.1 N NaOH, seawater, and water at 40-50°C. The chemical analysis of the products is incomplete at present.

Studies on preparation and characterization of cesium niobates will be continued. Emphasis will be placed upon determination of the means of increasing the reaction rate and investigation of the solubility and thermal stability of the niobates produced by the aqueous slurry reaction.

2. Cesium-137 Source Form Characterization

The purpose of this task is to characterize cesium-137 source forms for operational and safety requirements. The objective of the current study is to find a means of eliminating the solid-solid phase transition which occurs at 469°C with an accompanying volume increase.

Studies on structural transformation of the selected CsCl-KCl mixtures by means of a high temperature X-ray diffraction unit were continued. Two runs were made on the CsCl-2 mole % KCl mixture, each going through four heating-cooling cycles through the melting point under a continuous flow of argon gas.

After completion of the first cycle, a significant portion of the high-temperature structure (fcc type, β phase) CsCl was retained at room temperature while the remaining portion reverted to the low-temperature form (bcc type, α phase). From the second cycle on, transformation of the α-phase portion to the β structure on heating took place rapidly at approximately 460°C. Apparently, the heat effect involved in this transformation was so low that no peak was recorded on the DTA thermogram. On the other hand, change from the β to α form on cooling was very slow, and a considerable amount of β phase remained unchanged with repeated cyclic heat treatments.

Due to preferred orientation of the crystals, precise quantitative data were not readily obtainable in regard to the relative proportions of α and β phases. Nevertheless, measurement of the prominent β peak intensities appear to indicate that they remain nearly constant after the first cycle. The β phase at approximately 400°C seemed to become stabilized within approximately 8 hr after cooling to 400°C, and it remained so for a prolonged period of time (at least 24 hr). Further reduction in temperature to 250°C caused transformation of some additional "amount" of β to α phase.

The β phase retained at room temperature in an argon atmosphere gradually reverts to the α phase at such a slow rate that it may take several weeks or longer to complete the transformation. In contrast, the β to α transformation was almost complete in a few minutes upon exposure to air (ambient condition). Such phenomenon is probably similar to that of rapid recrystallization of alkali halides (e.g., NaCl) upon exposure to moisture, which has been observed by other investigators.[5]

The behavior of CsCl in the presence of 2 mole % of KCl discussed above may seem unusual in view of the small amount of KCl. If KCl is assumed to form a homogeneous substitutional solution with CsCl of the high-temperature structure (fcc type), it can be shown that the distance separating one potassium ion from another would be about twice the lattice parameter of cubic crystals (or approximately 6 Å). This implies that they are close enough that their influence on CsCl in regard to a property such as the ionic conductivity can be quite significant.

Characterization of the selected CsCl-KCl mixtures using both the high-temperature X-ray unit and the dilatometer will be carried out as time permits.

C. Cesium-137 Pilot Production (Production and Inventory Accounts)

1. Processing and Process Status

The first shipment of cesium-137 in the revised HAPO-I cask was received on November 13, 1970; the cask was placed in the unloading cell. The cask shield temperature was 54°C on receipt; water cooling reduced this to 17°C. Venting was done on November 16 and no pressure was detected. Connections to process lines were made on November 17 by semiremote techniques identical to those used for strontium-90 casks. Elution of the cesium-137 from the zeolite bed was done on November 18 by the following procedure:

1. Atmospheric air was drawn upflow through the zeolite bed for 1 hr, then 600 liters of cold water was drawn through the bed at 10 liters/min. The bed was allowed to stand covered with water for 3 hr before elution was begun.

2. Approximately 1200 liters of 5 M NH_4NO_3 at 55°C inlet temperature was drawn upflow through the bed at 10 liters/min. All the resulting solution was collected in a single tank.

3. An additional approximately 1200 liters of 5 M NH_4NO_3 at 55°C was drawn through the bed and collected in another tank.

4. A rinse of 600 liters of water was drawn through the bed into a separate collection tank.

At the completion of the elution all of the solutions were sampled, and the high-cesium-137 fractions were stored for later processing. The

---

[5]D. N. Braski, private communication, November 1970.

relatively lower cesium-137 content water used for bed hydration and rinse water fractions were combined and stored in a vessel containing recycle material from previous cesium-137 processing. Full analytical results are not available. Based on the in-cell assay instrument, which is calibrated for cesium-137, the several streams assayed:

Fraction	Cesium-137 (Ci)
Hydration water	2,700
First elution	381,000
Second elution	20,900
Rinse	200
Total	404,800

No operational problems were encountered. The elution was smooth, as indicated by elution outlet radiation monitors. There was a significant increase in the radiation reading at the beginning of the hydration operation; this rapidly dropped as the hydration proceeded. Upon the introduction of the 5 M NH_4NO_3, a very rapid increase in line reading began. The radiation reading reached a plateau where it remained until approximately 400 liters of eluate had passed through the cask, then a steady decrease began. At the point at which the outlet stream was diverted to the second collection tank, the cesium-137 concentration of the stream was about 5% of that at the peak.

The zeolite bed will be converted to the sodium form and the cask will be tested before it is shipped to the Atlantic Richfield Hanford Company.

The current cesium-137 process status is shown below:

Item	Cesium-137 (Ci)
In-process material	578,000[a]
$^{137}CsCl$ products	220,700[b]
Sources in fabrication	2,000
Completed sources awaiting shipment	46,500
Total	847,200

[a]Estimated.
[b]Includes 172,000 Ci returned to inventory, previously held for American Nuclear Corporation.

2. Operational Summary

Cesium-137	November 1970 Number	November 1970 Amount (Ci)	FY 1971 Number	FY 1971 Amount (Ci)
HAPO shipments received	1	405,000	1	405,000
Product batches prepared	0	0	0	0
Sources fabricated	15	32,300	54	41,400
Special form containers loaded	2	20,000	9	97,000
Sources shipped to customers	15	32,300	275	161,300
Special form containers shipped to customers	3	20,500	11	97,500

3. Current Orders

A list of current orders for cesium-137 as sources or bulk powder is shown below:

Customer	Amount (Ci)	Estimated Shipping Date
Atomic Energy of Canada Ltd.	2,000	December 1970
Brookhaven National Laboratory	~203,000	March 1971
Radiochemical Centre, England	20,000	Awaiting ship booking
CEA, France	200,001	April 1971
Technical Operations, Inc.	100	December 1970
American Hoechst Corporation	5	April 1971
Total	425,106	

Orders on hand for cesium-137 as bulk powder or sources to be scheduled when released by the customer include Atomic Energy of Canada, Ltd., approximately 155,800 Ci, and Radiation Resources, Inc., 200,001 Ci. Cesium sources containing 40,000 Ci are on hand awaiting receipt of shipping instructions and payment in advance.

4. Source Fabrication and Special Form Containers

Fifteen cesium-137 sources and two special form cans were encapsulated and shipped to customers. Thirteen of these sources, representing a total of 32,200 Ci, were of the high-density (teletherapy) type for AECL. Preparation of eight diluted $^{137}CsCl$ sources for this same customer is in progress. One shipment of 500 Ci of stock powder was made to 3M Company from stock cans that had been fabricated earlier and used as "shelf" items. Other orders filled were 20,000 Ci to the United Kingdom Treasury and Supply Delegation and 2 sources containing 100 Ci to Technical Operations. The powder cans used to fill the order to the United Kingdom Treasury and Supply Delegation were fabricated during November.

D. Strontium-90 Pilot Production (Production and Inventory Accounts)

1. Processing and Process Status

An existing vacuum hot press was modified to accept a 4-in. OD by 6-in.-long TZM die body. Two such dies were obtained; they were sized for 2.82-in.-diam pellets. Several test pellets were fabricated using inert $SrTiO_3$ and graphite punches to check out the system, then the press was placed in a manipulator cell. Five pellets of $^{90}SrTiO_3$ were pressed with good results. The finished pellet data are:

Pellet No.	Power (W)	Power Concentration (W/g)	Density (g/cm^3)	Power Density (W/cm^3)
V1	106	0.194	4.9	0.94
V2	86	0.194	4.5	0.85
V3	103	0.192	4.3[a]	0.82
V4	99	0.192	4.6	0.87
V5	100	0.185	4.8	0.88

[a]Pellet weight was low due to chips missing on side wall.

In all cases a single nickel screen support was used, and all fuel was calcined powder containing no sintered material (FPDL-produced regular inventory product). Pressing of crushed sintered $^{90}SrTiO_3$ and of mixtures of sintered and calcined material will be tried early in December.

The vacuum hot press operated with a minimum of difficulties. Its main drawback is the limitation on pellet size to about 100 W. A larger press similar in design is planned. The press has a cycle time of about 5 hr, but by using two dies this can be shortened. Under present circumstances the rate-controlling operation for multiple-pellet runs will probably be the transfer of fuel to the pelletization cell, which is isolated from the strontium-90 fuel handling cells.

Due to the concentration of effort on the vacuum hot press, little work was done with the resistance-heated hot press. Pressing of $^{90}SrTiO_3$ in ceramic-jacketed graphite dies and in a graphite-jacketed TZM die were both checked. In both cases low-density pellets resulted, but the fuel being pressed was 100% sintered powder — not the best from a compaction standpoint.

Plans for completing current orders include fabrication of a series of 100-W pellets to be used in combination with pellets previously made on the resistance-heated press. There has been some degradation of pellets under storage conditions. In some cases pellets have fractured enough to be unusable, and nearly all have developed visible cracks.

The current strontium-90 process status is shown on page 16.

Item	Strontium-90 (Ci)
In-process material	1,390,000
$^{90}SrTiO_3$ products	391,000
Sources in fabrication	550,000
Returned SNAP sources	295,000
Completed sources awaiting shipment	125,000
Total	2,751,000

2. Operational Summary

Strontium-90	November 1970 Number	November 1970 Amount (Ci)	FY 1971 Number	FY 1971 Amount (Ci)
HAPO shipments received	0	0	0	0
Product batches prepared	0	0	0	0
Sources completed	0	0	6	143,300
Special form containers loaded	21	2,700	25	53,400
Shipments to customers	16	1,400	22	147,600

3. Current Orders

A list of current orders for strontium-90 as sources or bulk powder is shown below:

Customer	Amount (Ci)	Estimated Shipping Date
U. S. Navy	557,000	December 1970
U. S. Navy	208,000	January 1971
Total	765,000	

Orders on hand for bulk powders or sources to be scheduled and shipped as released by the customer include Isotopes, Inc., approximately 105,000 and 20,000 Ci.

4. Source Fabrication and Special Form Containers

Source fabrication included the encapsulation of 21 assorted special form cans, 16 for shipment to customers and five to replenish stock supplies. The strontium was shipped in the form of calcined carbonate.

Customer	Number of Powder Cans	Amount (Ci)
Buchler and Company	5	802
CEA, France	1	300
UKT&SD	9	225
3M Company	1	25
Total	16	1,352

No heat sources were produced this month. The SNAP-7E source (approximately 30,000 Ci) was shipped from ORNL to the U. S. Navy. The following items were produced for stock and will be "shelf" items for future orders.

Number of Powder Cans	Curies per Can	Total Curies
2	500	1,000
3	100	300

E. Short-Lived Fission Products Pilot Production (Production and Inventory Accounts)

Isotope	Number of Batches	Amount (Ci)
Xenon-133	4	~1,500
Iodine-131	2	48
Barium-140	1	6
Strontium-89	1	15
Yttrium-91	1	6
Total	9	1,575

In addition to the above, a niobium-95 run was made but was found to be high in zirconium-95. This product will be reworked in December.

The yttrium-91 product listed above was a special run made for the Lovelace Foundation.

F. Strontium-90 Silicate Beta Sources

1. Matrix Studies

No additional work has been performed on the graphite matrix studies. Additional work is planned to improve the strength of the graphite carbon, including a study of binder composition and baking temperatures.

2. Strontium Silicate Compatibility Studies and Physical Properties

No additional work has been performed on the compatibility of strontium silicate and aluminum. However, an evaluation of previously performed tests should be available for reporting shortly.

Present plans call for long-range tests in which beta sources are subjected to elevated temperatures for extended time periods.

3. Source Output Measurements

An extrapolation chamber was set up in the laboratory for the purpose of measuring beta source surface dose rates. This extrapolation chamber provides a means of making absolute measurements, thus eliminating the necessity for calibration with standard sources. It consists of an ionization chamber with parallel plates, one of which can be accurately positioned to provide a precisely known volume. Ionization current produced by radiation from the source is measured by a vibrating reed electrometer. A plot is made of ion current versus electrode spacing. The surface dose rate is obtained by multiplying the limiting slope of this curve by the appropriate energy and volume conversion factors as the electrode spacing approaches zero. Accurate output measurements will provide information which will permit more precise estimation of dose rate versus source loading and geometry. It will also be possible to determine the uniformity of source output from one point to another, which should result in improvement in manufacturing procedures. Output measurements were made from two sources fabricated from 0.010-in. rectangular stainless steel tubing (0.375 by 0.085 in. inside measurement) filled with an inorganic ion exchange medium (aluminum silicate) containing strontium-90.

Uniformity measurements over the length were made on one of these sources indicating a variation of less than 10%. It will be necessary to make several refinements in measuring techniques before it will be possible to report precise output measurements.

G. Promethium-147 Source Fabrication, Powder Shipments, and Current Orders

A promethium-147 run was made in order to fill two large orders (10,000 Ci to CEA, France, and 6,000 Ci to 3M Company) for promethium oxide powder.

A list of current orders for promethium-147 as sources or bulk powder is shown below:

Customer	Amount (Ci)	Estimated Shipping Date
McDonnell Douglas Astronautics Company	50,000	February 1971[a]
Minnesota Mining and Mfg. Company	2,500	January 1971
Technische Universitat Munchen, Germany	500	February 1971
Total	53,000	

[a]To be shipped from Richland, Washington.

APPLICATIONS AND TECHNOLOGY SUPPORT - 08-01-04

A. Low-Energy Gamma and Secondary X-Ray Sources

1. Literature Survey on the Design of Americium-241 Sources

A literature survey was made to obtain information as to the size, shape, quantity of radioactivity placed in sources, output of sources, and unique uses or applications for americium-241 sources. From 10,000 radioisotope reports, 300 contained information about americium-241.

The three basic kinds of sources utilize americium-241: alpha sources, photon sources, and neutron sources. The alpha sources are flat-plate type. Neutron sources, from which neutrons are obtained by secondary reaction of the alpha particle on low-atomic-number elements, and the photon sources are usually fabricated in simple cylindrical form.

The higher energy gamma radiation (59.5 keV) is produced in approximately 36% of the disintegrations of americium-241. This photon is used in many applications, either by absorption, backscattering to determine composition, or in the production of fluorescent X rays to determine composition. The scattering of the alpha particle is used to determine the thickness of thin metal films. Alpha sources are also used for ionization of gas to determine the presence of CO_2.

The survey should be completed within the next month and will cover americium-241 source capsules, characteristics of sources relative to output, and reported uses of these sources.

2. Americium-241 Annular Source for Vanderbilt University Hospital

Vanderbilt University Hospital has need for an americium-241 source that will efficiently yield the 60-keV photon. The source will be a 0.250-in.-OD by approximately 9.4-in.-long aluminum tube filled with 10 Ci (3 g) of $^{241}AmO_2$. The wall thickness is approximately 0.035 in. After the tube is filled and welded to close the ends, it will be bent into a 3.0-in.-diam ring.

The source will be used to detect and map the iodine-129 within the thyroid gland at concentrations of approximately 0.04% by weight. The americium-241 decays to produce a predominant gamma energy of 59.5 keV, which excites the iodine atom to produce K alpha X rays of approximately 28.5 keV and K beta X rays of approximately 32.3 keV.

An annular source rather than a simple cylindrical one was designed so that the thickness of the radioactive material would be reduced with a resulting reduction in self-absorption within the source of the 59.5-keV gamma radiation. Paul Hoffer[6] has used a 300-mCi americium-241 source

---

[6]Paul B. Hoffer, Fluorescent Thyroid Scanning, Amer. J. Roentgenology, Rad. Therapy and Nuclear Medicine 105(4): 721-27 (1969).

for fluorescent thyroid scanning. Thirty times this amount of americium-241 (10.0 Ci) will be placed in this source so that the time of scanning of the thyroid can be reduced. The radiation dose to the patient should not necessarily be increased even though the quantity of radioactive material is increased.

This source should be completed during December and sent to Vanderbilt University Hospital for evaluation in cooperative work with secondary X-ray emission studies.

3. Plutonium-238 Source Evaluation

The radiation from small cylindrical sources containing microgram quantities of plutonium-238 is being measured by gamma and X-ray spectrometry to determine the energies and quantity of radiation from the sources. The $^{238}PuO_2$ is encapsulated in cylindrical (0.150 by 0.050 in.) vanadium capsules with a 0.014-in. wall thickness.

The Si(Li) detector measured energies of 43.4 keV and the L X rays of uranium and plutonium. The higher energy peaks are not efficiently measured by the silicon detector. The vanadium K X rays were detected, but they are considerably reduced by absorption in the 0.014-in. wall thickness of vanadium.

The Ge(Li) crystal detected the predominant energy peaks at 43.5, 99.8, and 152.8 keV. An energy peak at 59.5 keV was measured and attributed to americium-241, since the analysis of the plutonium-238 showed the presence of a small amount of plutonium-241 which would decay to produce americium-241.

It is conceivable that plutonium-238 would have use as a standard source for spectrometer energy calibrations because of the wide range of energy peaks, and it should have use in fluorescent X-ray analyses particularly in the range of 40 to 100 keV.

The quantity of photons in each energy peak can be accurately determined by determining the efficiency and geometry of the detectors with standardized sources for each energy. This in effect calibrates the particular detector with respect to energy and efficiency of measurement. Absorption coefficients for all materials used in the construction of the source and the beryllium or aluminum covering the detector must be experimentally determined for each energy which is measured if they are not available in literature.

B. Radioisotope Characterization, Quality Control, and Standards

1. Radioisotope Characterization

One of the functions of the characterization program is maintenance of information, or familiarity with sources of information, to answer inquiries related to properties of radioisotopes. A request for data on

the gamma radiations of plutonium-238 was fulfilled by reference to a newly published table[7] by the ORNL Nuclear Data Group, covering even-mass nuclides in the range 230-242. Another authoritative tabulation[8] of great practical value includes information on 105 common radionuclides. A brief literature search was made in response to a request for suggestion of a nuclide whose particulate radiation consists largely of conversion electrons of energy around 30-100 keV. Considering availability, the best choice appeared to be cadmium-109, which has 88-keV gamma radiation with a conversion coefficient of approximately 25. (Auger electrons are of too low energy to interfere in the intended application.) A representative of the National Bureau of Standards inquired about availability of iridium-192 of sufficiently high specific activity to permit studying the behavior of iridium at 10^{-10} M. Our withdrawn product would have been suitable, but we have no information on current commercial materials.

2. Radioisotope Special Analysis and Quality Control

The absolute measurement of a silver-110m standard by 4π β-γ coincidence counting yielded a result within 0.6% of the commercial supplier's value. The draft of a method of using induced silver-110m as a measure of neutron flux was reviewed for ASTM Committee E-10. In answer to an inquiry about radiochemical methods for a number of elements, references were given to ASTM procedures, the monographs by the Radiochemistry Subcommittee of the National Research Council, and the ORNL Master Analytical Manual. In addition, mention was made of books on scintillation and semiconductor spectrometry, since use of these techniques can often eliminate or minimize the need for chemical-separation methods. The International Commission on Radiation Units and Measurements (ICRU) has just issued Report No. 18, Specification of High Activity Gamma-Ray Sources, which is being studied to determine its usefulness with respect to local production and communications with users of gamma sources.

C. Radioisotope Safety

1. Surveillance of Regulations and Cask Evaluations

a. Review of Regulations

A meeting of the American National Standards Institute's N-14 Committee on Packaging of Radioactive Material was held in New York to consider a standard for leak-testing of packages to comply with proposed revisions to the IAEA transport regulations. The standard under consideration places a possible lower limit for leak detection of packages at 1×10^{-8} cm^3/sec. The probable mass transfer rates of the various radionuclides in their chemical and physical forms in transit will be examined to determine feasibility of compliance with proposed regulatory requirements.

---

[7] Nuclear Data Sheets B4: 543-697 (1970).
[8] M. J. Martin and P. H. Blichert-Taft, Nuclear Data Tables A8: 1-198 (1970).

b. Cask Evaluation

An evaluation of the Sugarman Cask with its wood fire and impact shield was made in accordance with the requirements of AEC Manual Chapter 0529 to extend the authorized contents to include 100-g $^{238}PuO_2$ heat sources. Oak Ridge Operations Office approval was received, and a petition for revision of the special permit for this package has been submitted to the Department of Transportation.

2. Dose-Rate Measurements of Self-Luminous Light Sources

The radiation from these sources is being measured at several distances from the sources with various types of common survey meters to determine which meters are suitable for use in determining compliance with transport regulations involving dose rates. In order to obtain the instrument response to radiation from the isotopes involved, each instrument was checked at various distances from known cobalt-60, promethium-147, and krypton-85 standard sources. The results for an ORNL cutie pie and a Civil Defense survey meter are given in Table 4. The distances given were measured from the detector window to the surface of the source.

Table 4. Response of Detectors to Radiation from Standard Sources

Distance (cm)	Detector Reading and Calculated Dose Rate (mR/hr) from 10.1-μCi ^{147}Pm Standard		1.5-mCi ^{85}Kr Standard		10.53-μCi ^{60}Co Standard	
	Instrument Response	Calculated Dose Rate	Instrument Response	Calculated Dose Rate	Instrument Response	Calculated Dose Rate
			Cutie Pie			
0	-	-	-	-	9	-
1	290	0.46	30.0	41.9	7.0	126.4
2	170	0.12	20.0	10.5	6.0	31.6
3	100	0.05	13.0	4.7	4.0	14.0
4	48	0.03	9.0	2.6	3.0	7.9
5	32	0.02	6.0	1.7	2.5	5.1
6	21	0.012	4.0	1.2	2.0	3.5
7	15	0.009	3.0	0.86	1.5	2.6
8	11	0.007	3.0	0.65	1.0	2.0
9	8	0.006	2.0	0.52	<1.0	1.6
10	6	0.005	1.0	0.42	<1.0	1.3
15	2	0.002	0	0.19	<1.0	0.6
20	1	0.001	0	0.11	<1.0	0.3
25	<1	0.0007	0	0.07	<1.0	0.2
			Civil Defense Survey Meter			
0	2.7	-	30.8	-	>50	-
1	0.5	0.46	13.8	41.9	36.7	126.4
2	0.2	0.12	7.3	10.5	19.7	31.6
3	0.0	0.05	3.3	4.7	12.2	14.0
4	0	0.03	2.1	2.6	7.2	7.9
5	0	0.02	1.5	1.7	5.2	5.1
6	0	0.012	1.1	1.2	2.7	3.5
7	0	0.009	0.9	0.86	2.2	2.6
8	0	0.007	0.8	0.65	1.7	2.0
9	0	0.006	0.5	0.52	1.5	1.6
10	0	0.005	0.4	0.42	1.3	1.3
15	0	0.002	0.2	0.19	0.6	0.6
20	0	0.001	0	0.11	0.3	0.3
25	0	0.0007	0	0.07	0	0.2

The calculated dose-rate values are based on the gamma and bremsstrahlung radiations and do not include the dose from any beta which may reach the detector. The promethium-147 source is not encapsulated and considerable beta radiation was expected to escape from the source. The krypton-85 source is encapsulated in thin glass tubing, which was expected to partially screen the betas and low-energy bremsstrahlung. The cobalt-60 source is a U. S. Bureau of Standards standard designed to closely approach a point source geometry.

Since the thin-window cutie pie is beta sensitive, the observed dose rate would be expected to be much higher than the calculated photon dose rate for the promethium-147 source and slightly higher for the krypton-85 source. The Civil Defense meter has a relatively thicker window capable of absorbing much of the beta and bremsstrahlung, giving a reading more nearly equal to the calculated promethium-147 and krypton-85 values. The effect of the relative geometry of the detector and source is apparent in the observed values for the cobalt-60 source. The cutie pie, which is generally used as an area survey instrument, when placed very close to the small source gave readings very much lower than the calculated value. This is because the large ionization chamber of the cutie pie is not in fairly uniform radiation field. As the distance is increased, the total area of the chamber becomes more uniformly exposed and the reading more nearly matches the calculated value at that distance. The effect is less noticeable with the Civil Defense meter because it uses a much smaller chamber. To verify that such a large geometry factor can occur with the cutie pie and similar instruments, the radiation output of the cobalt-60 source will be measured by thermoluminescent dosimetry using 1-mm-diam by 4-mm-long LiF rods.

3. Tritium Foil Studies

A study to determine tritium losses from foils used in certain types of gas chromatograph-detectors under various conditions of use is in progress. The tritium in these foils is in the form of titanium tritide on a stainless steel backing. Tests are being made to evaluate the effects of temperature, heating rate, and foil cleaning procedures on the tritium losses. Foils having tritium concentrations of 250, 500, and 1000 mCi/in.^{2} were obtained for testing. The 250-mCi/in.^{2} sources contain deuterium in addition to tritium, whereas the other sources contain only tritium. The tritium losses from each of the above source types when they are heated for 1 hr at various temperatures in an argon flow are given in Table 5.

Table 5. Tritium Losses from Foils at Various Temperatures in Argon

Nominal Activity (mCi/in.^{2})	Tritium Loss (% of initial activity)					
	Temperature (°C)					
	125	150	175	200	250	275
250	0.0029	0.0089	0.0157	0.022	0.297	0.419
500	0.0190	0.0437	0.0618	0.191	0.267	1.054
1000	0.0042	0.0066	0.0141	0.066	0.347	0.621

About 99% of the losses were in the form of tritium oxide. The losses increase slowly with temperature to about 175°C, but at 200°C and higher the losses increase rapidly. Additional tests are planned to define more closely the temperature at which the losses begin to increase rapidly.

TECHNOLOGY UTILIZATION - 08-01-05

A. Information Center

The IIC now has more than 21,000 documents accessioned, with the most recent 12,000 retrievable by computer and all retrievable by the Termatrex system. In November, 81 requests for information were filled, the requesters being about equally divided among industry, colleges and private laboratories, and state and federal government organizations. In filling these requests, 133 items were sent out: nine special literature searches, 80 documents already prepared by IIC, and 44 minor searches.

Seven sales letters were translated and assistance was given to the Translation Office in preparing a bulletin for Laboratory distribution. A list of reviews in progress is shown below.

Title	Author(s)	Status, % Complete
DID Research and Developments - 1970	Isotopes Information Center Staff	25
Iodine-125	P. S. Baker and Martha Gerrard	30
List of AEC Radioisotope Customers with Summary of Radioisotope Shipments, FY 1970	Ruth Curl, compiler	75
Patent Literature on Process Radiation and Irradiator Design, Part 1. U. S. Patents 1950 Through 1968	R. E. Greene, Helen S. Warren, and P. S. Baker	99
Potato Sprout Inhibition by Radiation, Part II	F. E. McKinney	-
Radioisotopes in the Steel Industry, Part 2	W. R. Pavlik, Republic Steel Corp. (F. E. McKinney, Ed.)	30
Selected Abstracts of World Literature on Production and Industrial Uses of Radioisotopes, Part 3	Martha Gerrard and P. S. Baker	20
Self-Diffusion in Liquids	F. J. Miller	75
Strontium-90	Roberta Shor, R. H. Lafferty, Jr., and P. S. Baker	Final Typing
Technetium-99m: Preparation and Uses	Martha Gerrard and P. S. Baker	50
Radioisotopes in the Textile Industry	F. J. Miller	90
Grain Disinfestation - A Worldwide Review	F. E. McKinney	20
AEC Participation in the Development of Wood-Plastic Composites	R. E. Greene	95
Permuted Isotopes and Radiation Technology Indexes (PIRTI) 1962-1969, Vols. 1-7	Helen Raaen, P. S. Baker, R. H. Lafferty, Jr., Ann S. Klein, and Linda P. Helton, Eds.	Ready for Reproduction
Presowing Irradiation of Seed	Russian book translated and edited by P. S. Baker and Martha Gerrard	Review of 1st Draft Complete
Design and Application of X-Ray--Emission Analyzers Using Radioisotopic X- or Gamma-Ray Sources	J. R. Rhodes (Martha Gerrard and R. E. Greene, Eds.)	Being Typed for Reproduction

B. Isotopes and Radiation Technology

Galley proofing of Isotopes and Radiation Technology 8(3) and writing and editing of the manuscript for 8(4) were continued.

C. Publication

F. J. Miller, E. V. Sayre, and B. Keisch, Isotopic Methods of Examination and Authentication in Art and Archaeology, ORNL-IIC-21, Oak Ridge National Laboratory (October 1970).

RADIOISOTOPE APPLICATIONS DEVELOPMENT

SYSTEMS ENGINEERING APPLICATIONS - 08-03-02

A. Oceanographic Systems Study

> Radionuclides appear to be useful tools to study sand transport phenomena and, although many experiments have been conducted to demonstrate their effectiveness as tracers, little is known concerning whether or not the dynamic systems in which they are used can be tagged well enough to achieve quantitative data leading to an understanding of basic mechanisms. The Radioisotope Sand Tracing (RIST) study has progressed through equipment development to the point where important system tagging parameters can be studied.

A sand tracing experiment was conducted at Point Mugu, California. Operations began November 2, 1970, and terminated November 13, 1970. Data were collected from seven plug injections, two line sources, and six point surface injections.

The experiment was designed around a concentrated effort in the -10 to -15 ft depth zone, which is seaward of the breaker zone. The first line source was placed perpendicular to the shore and extended from -10 to -15 ft. The purpose of this injection was to obtain surface transport vectors which could be compared to plug injections made at the same water depth. Three plug injections, one at -10 and two at -15 ft, were made and some data were collected from the plugs and the line source. Unfortunately, a change in ocean conditions resulted in a reversal in the direction of the longshore current. This series of injections was abandoned and the experiment was repeated during the second week of the test period.

The line source north of the experimental groin, which was scheduled for the first week of the test, was delayed to the second week because all of the groin panels were not in place. The source was injected the second week and extended from +3 to -18 ft depth contours. Transport data were obtained from this injection.

During this period, four plug injections were made, one at -12 ft, two at -15 ft, and one at -18 ft. Three point surface injections were made near the plug injections to provide surface transport vectors. Data were collected from these injections.

Three point surface injections were made at -15 ft. Each one of these injections contained a specific size fraction of the total sand population. This experiment was designed to determine the effect of particle size on transport.

The PDP/8I was shipped to the experimental site and was used to plot some of the survey data. The unit will be mounted in the instrument house before the next experiment.

All the necessary arrangements for the rugged survey system have been completed and design and layout work will begin immediately.

RADIOISOTOPE SALES

A request for quotation was received from Nuclear Materials and Equipment Corporation for up to 50 strontium-90 sources containing up to 117,500 Ci, and a request for quotation was received from Gulf General Atomic, Inc., for up to 50 strontium-90 sources containing up to 386,000 Ci. A request for quotation was received from Lockheed-Georgia for 18 cesium-137 sources containing approximately 35,000 Ci.

Shipments made during the month include 226 Ci of strontium-90 to Radiochemical Centre, England; 6,000 Ci of tritium to New England Nuclear Corporation; 9,875 Ci of strontium-90 to Mitsubishi International Corporation; 30,000 Ci of strontium-90 to Sanders Nuclear Corporation; 500 Ci of cesium-137 and 3,501 Ci of promethium-147 to Minnesota Mining and Manufacturing Company; 302 Ci of strontium-90 and 9,999 Ci of promethium-147 to CEA, France; 802 Ci of strontium-90 to Buchler and Company, Germany; 1,059 mCi of nickel-63 to Mitsubishi International Corporation; and 22,225 Ci of cesium-137 to Atomic Energy of Canada.

Products prepared and shipped during November include 253 Ci of xenon-133, 5,600 Ci of tritium, 570 Ci of krypton-85, 618 Ci of 20% tritium-80% helium mixture, 25 Ci of $^{90}SrCO_3$, 15 Ci of enriched krypton-85, and 100 mg of U_3O_8.

The radioisotope sales proceeds and shipments for the first four months of FY 1970 and FY 1971 are given in Table 6.

Table 6. Radioisotope Sales and Shipments

Item	July thru October 1969	July thru October 1970
Inventory items	$172,095	$141,861
Major products	39,222	41,970
Radioisotope services	63,500	120,442
Cyclotron irradiations	40,933	30,895
Miscellaneous processed materials	32,182	15,421
Packing and shipping	24,202	27,205
Total Radioisotope Sales	$372,134	$377,794
Total Radioisotope Shipments	803	1,039

ADMINISTRATIVE

Travel by IDC personnel and visitors to the IDC are given in Tables 7 and 8, respectively.

Table 7. Travel of IDC Personnel

Site Visited	Purpose of Visit
Washington, D. C.	Attend ANS meeting and discuss radioisotope program with AEC-DID
Oxnard, California	Participate in RIST experiment at Point Mugu, California
Gatlinburg, Tennessee	Present a paper at the Fall Meeting of the Nuclear Division of American Ceramics Society
New York, New York	Attend American National Standards Institute N-14 Committee meeting on leak test standards
Memphis, Tennessee	Attend the Tennessee Academy of Science meeting
Chicago, Illinois	Attend AIChE meeting

Table 8. Visitors to IDC

Affiliation	Purpose of Visit
Goodyear, Portsmouth, Ohio	Discuss sewage effluent purification with radiation
Vanderbilt University Nashville, Tennessee	Discuss gadolinium and americium sources for cooperative program
American Association of Textile Chemists and Colorists	Hold committee meeting and discuss radiation processing of textile effluents
The Institute of Radioactive Research of the Federal University of Minas Gerais, Belo Horizonte, Brazil	Discuss isotope development
Private consultant	To obtain information on isotope separations
Instituto de Pesquisas Radioactivas Comissao Nacional de Energia Nuclear Belo Horizonte-MG, Brazil	To tour Isotopes Information Center
National Library of Medicine	To tour Isotopes Information Center

PUBLICATIONS

JOURNALS

A. F. Kluk, D. Krmpotic, J. H. Hamilton, and J. J. Pinajian, K Conversion Coefficients of Transitions in ^{87}Sr, Z. Physik 235: 391-94 (1970).

REPORTS

A. F. Rupp, Radioisotope Program (8000) Progress Report for October 1970, ORNL-TM-3228, Oak Ridge National Laboratory.

R. E. McHenry and P. Angelini, Curium-244 — Iridium Alloy as a Fuel Form, ORNL CF-70-10-51, Oak Ridge National Laboratory (Oct. 22, 1970).

N. C. Bradley, Waste Incineration Study of a Batch-Operated, Closed, Pressurized Oxygen Incinerator, ORNL-CF-70-11-34, Oak Ridge National Laboratory (Nov. 13, 1970).

PAPERS PRESENTED AT SCIENTIFIC MEETINGS

E. E. Ketchen, Thermal Conductivity of $^{90}Sr_2TiO_4$ Isotopic Power Fuel, presented at the American Ceramic Society Nuclear Division Meeting, Gatlinburg, Tennessee, November 3-6, 1970.

INTERNAL DISTRIBUTION

1. A. L. Allen
2. M. A. Baker
3. P. S. Baker
4. E. E. Beauchamp
5. G. E. Boyd
6-8. T. A. Butler
9. F. N. Case
10. J. A. Cox
11. F. L. Culler
12. W. C. Davis
13. J. S. Drury
14. J. H. Gillette
15. H. R. Gwinn
16. R. F. Hibbs
17. K. E. Jamison
18. Lynda Kern
19. E. H. Kobisk
20. E. Lamb
21. R. E. Leuze
22. J. L. Liverman
23. L. O. Love
24. W. S. Lyon
25. R. E. McHenry
26. F. M. O'Hara
27. W. W. Parkinson
28. J. J. Pinajian
29. M. E. Ramsey
30. S. A. Reynolds
31-32. R. A. Robinson
33. D. A. Ross
34. A. F. Rupp
35. R. W. Schaich
36. A. H. Snell
37. K. A. Spainhour
38. M. R. Skidmore
39-40. H. F. Stringfield
41. D. B. Trauger
42. A. M. Weinberg
43. J. C. White
44-45. Central Research Library
46. Document Reference Section
47-51. Laboratory Records Department
52. Laboratory Records - RC

EXTERNAL DISTRIBUTION

53. G. A. Andrews, ORAU, Medical Division, Oak Ridge, Tennessee
54. Hal Atkins, Brookhaven National Laboratory, Upton, New York
55. D. S. Ballantine, AEC, Washington, D. C.
56-59. R. F. Barker, AEC, Washington, D. C.
60. N. F. Barr, AEC, Washington, D. C.
61. O. M. Bizzell, AEC, Washington, D. C.
62. C. R. Buchanan, AEC, Washington, D. C.
63. R. L. Butenhoff, AEC, Washington, D. C.
64. T. D. Chikalla, PNL, Richland, Washington
65. D. F. Cope, AEC Site Representative, ORNL
66. D. C. Davis, AEC, Oak Ridge, Tennessee
67. J. C. Dempsey, AEC, Washington, D. C.
68. W. K. Eister, AEC, Washington, D. C.
69. E. E. Fowler, AEC, Washington, D. C.
70. J. D. Goldstein, AEC, Washington, D. C.
71. A. Gottschalk, Argonne Cancer Research Hospital, Chicago, Illinois
72. F. D. Haines, AEC, Washington, D. C.
73-75. J. E. Hansen, PNL, Richland, Washington
76. J. W. Irvine, MIT (Consultant)
77. J. Lawrence, Lawrence Radiation Laboratory, Berkeley, California
78. J. E. Machurek, AEC, Washington, D. C.
79. J. N. Maddox, AEC, Washington, D. C.
80. J. C. Malaro, AEC, Washington, D. C.
81. W. E. Mott, AEC, Washington, D. C.
82. J. A. Powers, AEC, Washington, D. C.

83. G. J. Rotariu, AEC, Washington, D. C.
84. B. A. Ryan, AEC, Richland, Washington
85. W. D. Sandberg, AEC, Aiken, South Carolina
86. S. J. Seiken, AEC, Washington, D. C.
87. R. W. Shivers, AEC, Washington, D. C.
88. P. E. Smith, ARHCO, Richland, Washington
89. L. G. Stang, Jr., BNL, New York
90. G. Taplin, University of California, Los Angeles, California
91-96. D. H. Turno, SRL, Aiken, South Carolina
97. A. R. Van Dyken, AEC, Washington, D. C.
98. Laboratory and University Division
99-113. Division of Technical Information Extension
114. F. J. Skozen (Krizek), Argonne Cancer Research Hospital, Chicago, Illinois